NAVAL POSTGRADUATE SCHOOL
MONTEREY, CALIFORNIA

THESIS

ENHANCED FIBER OPTIC GUIDED MISSILE: A CASE ANALYSIS OF FORCE STRUCTURE ISSUES EFFECTING THE PROGRAM

by

Douglas A. Tamilio

June 1996

Thesis Advisor: John Dillard

Approved for public release; distribution is unlimited.

19960805 010

DTIC QUALITY INSPECTED 1

REPORT DOCUMENTATION PAGE

Form Approved OMB No. 0704-0188

Public reporting burden for this collection of information is estimated to average 1 hour per response, including the time for reviewing instruction, searching existing data sources, gathering and maintaining the data needed, and completing and reviewing the collection of information. Send comments regarding this burden estimate or any other aspect of this collection of information, including suggestions for reducing this burden, to Washington Headquarters Services, Directorate for Information Operations and Reports, 1215 Jefferson Davis Highway, Suite 1204, Arlington, VA 22202-4302, and to the Office of Management and Budget, Paperwork Reduction Project (0704-0188) Washington DC 20503.

1. AGENCY USE ONLY *(Leave blank)*	2. REPORT DATE June 1996	3. REPORT TYPE AND DATES COVERED Master's Thesis
4. TITLE AND SUBTITLE: ENHANCED FIBER OPTIC GUIDED MISSILE: A CASE ANALYSIS OF FORCE STRUCTURE ISSUES EFFECTING THE PROGRAM		5. FUNDING NUMBERS
6. AUTHOR(S) Tamilio, Douglas A.		
7. PERFORMING ORGANIZATION NAME(S) AND ADDRESS(ES) Naval Postgraduate School Monterey, CA 93943-5000		8. PERFORMING ORGANIZATION REPORT NUMBER
9. SPONSORING/MONITORING AGENCY NAME(S) AND ADDRESS(ES)		10. SPONSORING/MONITORING AGENCY REPORT NUMBER
11. SUPPLEMENTARY NOTES The views expressed in this thesis are those of the author and do not reflect the official policy or position of the Department of Defense or the U.S. Government.		
12a. DISTRIBUTION/AVAILABILITY STATEMENT: Approved for public release; distribution is unlimited.		12b. DISTRIBUTION CODE:

13. ABSTRACT *(maximum 200 words)*

Force structure issues are common in the acquisition of new technologies. In some cases, such as the Enhanced Fiber Optic Guided Missile (EFOG-M), it has been a painstaking effort to come to any consensus on how this system should be used and what force structure should support it. The introduction of fiber optic technology to the modern battlefield promises to revolutionize current doctrine and address a new dimension of battle. Fiber optic technology may give tomorrow's military the ability to direct precision fires against non-line of sight (NLOS) targets. This thesis examines the force structure issues effecting the Enhanced Fiber Optic Guided Missile (EFOG-M) program. The major focus is to determine if the current proposed force structure is the optimal solution and if not, suggest possible alternative solutions. Two courses of action were examined, both advocated deploying the EFOG-M system in platoon organizations organic to the battalion. An analysis of the current threat, previous studies, and concepts promulgated by Force XXI have enabled this study to recommended that the Army consider changing it's current plan of deploying the EFOG-M at brigade level and field the system at battalion level.

14. SUBJECT TERMS Enhanced Fiber Optic Guided Missile, Force Structure, Force XXI			15. NUMBER OF PAGES 82
			16. PRICE CODE
17. SECURITY CLASSIFICATION OF REPORT Unclassified	18. SECURITY CLASSIFICATION OF THIS PAGE Unclassified	19. SECURITY CLASSIFICATION OF ABSTRACT Unclassified	20. LIMITATION OF ABSTRACT UL

NSN 7540-01-280-5500

Standard Form 298 (Rev. 2-89)

Approved for public release; distribution is unlimited.

ENHANCED FIBER OPTIC GUIDED MISSILE: A CASE ANALYSIS OF FORCE STRUCTURE ISSUES EFFECTING THE PROGRAM

Douglas A. Tamilio
Major, United States Army
B.S., Salem State College, 1985

Submitted in partial fulfillment of the
requirements for the degree of

MASTER OF SCIENCE IN MANAGEMENT

from the

NAVAL POSTGRADUATE SCHOOL
June 1996

Author: _____
Douglas A. Tamilio

Approved by: _____
John Dillard, Thesis Advisor

_____
Orin E. Marvel, Second Reader

_____
Reuben T. Harris, Chairman
Department of Systems Management

ABSTRACT

Force structure issues are common in the acquisition of new technologies. In some cases, such as the Enhanced Fiber Optic Guided Missile (EFOG-M), it has been a painstaking effort to come to any consensus on how this system should be used and what force structure should support it. The introduction of fiber optic technology to the modern battlefield promises to revolutionize current doctrine and address a new dimension of battle. Fiber optic technology may give tomorrow's military the ability to direct precision fires against non-line of sight (NLOS) targets. This thesis examines the force structure issues effecting the Enhanced Fiber Optic Guided Missile (EFOG-M) program. The major focus is to determine if the current proposed force structure is the optimal solution and if not, suggest possible alternative solutions. Two courses of action were examined, both advocated deploying the EFOG-M system in platoon organizations organic to the battalion. An analysis of the current threat, previous studies, and concepts promulgated by Force XXI have enabled this study to recommended that the Army consider changing it's current plan of deploying the EFOG-M at brigade level and field the system at battalion level.

TABLE OF CONTENTS

I. INTRODUCTION 1

A. BACKGROUND 1

B. OBJECTIVES 5

C. RESEARCH QUESTIONS 6

D. DISCUSSION 6

E. SCOPE 7

F. METHODOLOGY 7

G. ORGANIZATION 8

II. BACKGROUND 9

A. INTRODUCTION 9

B. THREAT 10

C. FORCE XXI 16

1. Introduction 16

2. Battle Dynamics 16

3. Battle Command 17

4. Battle Space 18

5. Deep and Simultaneous Attack 19

D. EFOG-M 20

1. History 20

2. Proposed Organization 23

E. SUMMARY 26

III. FORCE STRUCTURE 27

A. INTRODUCTION 27

B. HISTORICAL DOCUMENTATION 27

1. NLOS White Paper 27

2. Close Support Study Group (CSSG) 30

3. Concept Evaluation Program (CEP) 32

C. STRENGTHS AND WEAKNESSES OF FORCE STRUCTURE 35

1. Strengths 35

2. Weaknesses 37

D. CHAPTER SUMMARY 42

IV. ALTERNATE FORCE STRUCTURES 43

A. INTRODUCTION 43

B. BRIGADE/BATTALION COMPARISON 43

C. COURSE OF ACTION ONE 47

1. General 47

2. Strengths 50

3. Weaknesses 52

4. Summary 53

D. COURSE OF ACTION TWO 53

1. General 53

2. Strengths 55

3. Weaknesses 56

4. Summary 56

E. CHAPTER SUMMARY 57

V. CONCLUSIONS AND RECOMMENDATIONS 59

A. SUMMARY 59

B. ANSWERS TO RESEARCH QUESTIONS 60

C. RECOMMENDATION 62

D. AREAS FOR FURTHER RESEARCH 63

E. CONCLUSIONS 64

LIST OF REFERENCES 67

INITIAL DISTRIBUTION LIST 71

FOREWORD

The F/A-18 SAFE report is published quarterly by the Structures Division (AIR-4.3.3) of the Air Vehicle Department (AIR-4.3) of the Naval Air Systems Command. The Structures Division, as the cognizant sponsor of the SAFE Program, specifies and approves the procedures used to produce this report and the information presented herein.

The purpose of this report is to provide updated individual aircraft usage information with respect to structural life limits in the Service Life Limits Instruction, NAVAIRINST 13120.1. This report provides airframe fatigue life computations and landing usage data, strain sensor operational status, strain exceedances and Nz exceedances for all F/A-18 aircraft through FA380 (BUNO 163175), FB41 (BUNO 163123), FC411 (BUNO 165186), and FD139 (164967). Comparisons of Fleet usage to design are also presented. Fatigue Life Expended (FLE) values reported represent Fleet service through 31 March 1996.

Current Structural Life Limits (SLLs) for the F/A-18 airframe and components are provided in F/A-18 Service Life Bulletin (SLB) Nr 005, COMNAVAIRSYSCOM Letter 13410 3.1.1.1C1/5118 dated 12 April 1995.

THIS PAGE INTENTIONALLY LEFT BLANK

ranges, allowing a dual use capability between ADA and Infantry. Because of the Army's previous decision to remove the FOG-M as a main component of it's overall anti-armor plan, congressional language in the 1987 appropriations bill threatened to withhold money from the FOG-M program until the Army placed the system back into the plan. Thus, in August of 1988, the Defense Acquisition Board (DAB) approved a Milestone II decision to go ahead with full scale development. With the Air Defense School leading the project, a Full Scale Development (FSD) contract was awarded to the Boeing/Hughes team in early 1989. Approximately one year later, the Boeing/Hughes team began to experience significant difficulties with cost overruns and shortly thereafter the contract was terminated. [NLOS-CA, p. 2]

Since the cancellation numerous efforts have been made to revive the program. With the Infantry School back as the chief proponent, the Enhanced Fiber Optic Guided Missile, is currently being developed as part of the Rapid Force Projection Initiative Advanced Concept Technology Demonstration (RFPI ACTD). The RFPI ACTD will consist of a large scale Advanced Warfighting Experiment in Fiscal Year (FY) 98 followed by an extended users evaluation period in FY 99-00. In May of 1995 the U.S. Army awarded Raytheon Electronic Systems a $39.5 million contract for the ACTD

program with options for an additional $100 million. [Allen, p. 1]

With the Infantry School in the lead as the main proponent, today's EFOG-M system is envisioned as a multi-purpose, area precision kill weapon mounted on a M1097 Heavy High Mobility Multipurpose Wheeled Vehicle (HMMWV). The primary mission of the EFOG-M is to engage and destroy threat armored combat vehicles, other high value ground targets, and hovering or moving rotary wing aircraft at ranges up to 15 kilometers. Figure 1 provides a graphical depiction of the EFOG-M.

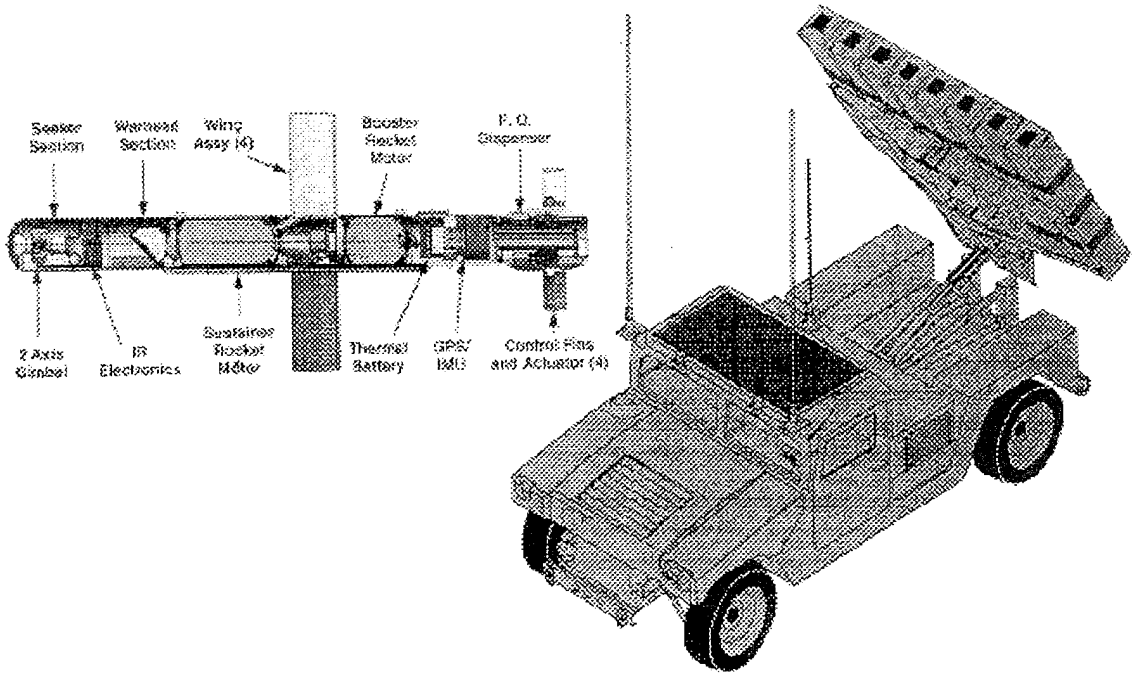

Figure 1. EFOG-M System. [Raytheon, p. 2]

The system consists of a gunner's station, a tactical missile, and a fiber optic datalink. The datalink allows the

gunner to guide the missile to the target using automatic or manual procedures. The EFOG-M system uses an imaging sensor in the missile for target acquisition and terminal homing. The image is transmitted from the missile to a gunner in the launch vehicle over the fiber optic datalink which pays out as the missile flies toward the target area. The missile then receives steering signals back through the datalink from the gunner's station. The gunner performs target selection and acquisition on a video screen and locks the automatic tracker onto an image of the target displayed on his console. The tracking commands are then sent to a ground station computer which sends steering commands back up the datalink to steer the missile to the designated target. The gunner has the option to take over from the computer at any point during flight and steer the missile manually. A key feature of this system is that it allows the crew to fire missiles from defilade or concealed positions, making it difficult for the enemy to locate launch sites, thus enhancing soldier survivability. [Raytheon, p. 1]

B. OBJECTIVES

The objectives of this study are: (1) to identify how force structures for new systems are developed within the Army, (2) to determine if the current proposed force structure is the optimal solution, and (3) to recommend a

viable alternative solution, if the current proposed structure is not the optimal solution.

C. RESEARCH QUESTIONS

1. Primary Research Question

Is the current proposed force structure of the EFOG-M system the optimal solution and does it maximize the system's unique and diverse capabilities?

2. Subsidiary Research Questions

a. What is the history of the EFOG-M program?

b. What is the current force structure?

c. What is the current status of the program?

d. Are there a feasible alternative force structures, not previously studied, that may better utilize the capabilities of the EFOG-M system.

D. DISCUSSION

Force structure issues are common in the acquisition of new technologies. New technologies such as the development of the tank and airplane have always had to contend with the force structure present at the time of acquisition. In some cases, such as the EFOG-M, it has been a painstaking effort to come to any consensus on how this system should be used and what force structure should support it.

The introduction of fiber optic technology to the modern battlefield promises to revolutionize current doctrine and address a new dimension of battle. Fiber optic

technology may give tomorrow's military the ability to direct precision fires against NLOS targets. The United States Army's development of this system and the various proposed force structures are somewhat unique, but not unfamiliar in terms of other historical examples. Unless the Army can decided on how to best utilize this new technology in terms of force structure, the program may again fall victim to budgetary constraints and risk cancellation.

E. SCOPE

This thesis is based on proposing a possible alternative force structure for the EFOG-M program. I plan to conduct a case study of the EFOG-M program, which examines the history, current proposed force structure, and the threat. In addition, I will compare an alternate force structure with the current force structure to determine the most practical solution.

F. METHODOLOGY

Initially, I will conduct an in-depth study of the available literature on the EFOG-M program. This will allow me to gather data necessary to provide an historical perspective. In addition, it will set the stage for discussion and analysis of the current force structure.

Next, I will conduct intensive interviews with personnel directly involved with the program and force

structure issues. This will allow me to compare the current force structure against the national threat and possible alternative.

Finally, from this examination, I will attempt to determine if the current proposed force structure is the optimal solution and if not, recommend a viable alternative.

G. ORGANIZATION

The organization of this thesis includes an introduction and background of the EFOG-M. Chapter II provides general background information, discusses the current threat and proposed force structure. Chapter III will analyze the strengths and weaknesses of the current proposed force structure and discuss how these can assist or impede the program's acquisition. Chapter IV will propose an alternative solution and compare it against the current solution. Chapter V presents conclusions drawn from this research and provides a recommendation for the optimal force structure.

II. BACKGROUND

A. INTRODUCTION

The need for effective anti-armor weapons within the U.S. Army is continuously growing, proportionally to often well equipped threat forces. More and more third world nations are equipping themselves with the latest and best armored vehicles that money can buy. These vehicles include heavy, medium, and light tanks, infantry fighting vehicles, and armored personnel carriers (APCs). Our rapid deployable light forces currently do not have the necessary "punch power" to effectively deal with the majority of these threat vehicles. This was recently highlighted during Desert Shield, where the 82nd Airborne, was referred to as "speed bumps". (PM Briefing, p. 2) This statement was made primarily because the 82nd lacked the required weapons to defeat heavy armored forces. Positioned without an effective method to stop large armored columns from advancing, the 82nd was in a less then favorable position. Fortunately, they were not put to the ultimate test. Applying the lessons learned from the Gulf War, the U.S. Army realized that in the future, if it was placed into similar situations it would require new technologies and rapid deployable weapons to assist in defeating threat forces.

This chapter will examine the world threat which has evolved after the collapse of the former Soviet Union. Additionally this chapter will discuss Force XXI, the Army's vision for it's future force structure, and examine the concepts of battle command and battle space. Both concepts are key components to Force XXI and will have a significant impact on the development of the Army's new force structure, as well as the force structure for the EFOG-M. Finally this chapter will provide the reader with a more in-depth look at the EFOG-M system by providing a chronological history of the system and discussing the current proposed force structure.

B. THREAT

The U.S. Army faces a very unstable, ever changing, and extremely complex threat scenario. The collapse of the Soviet Union and the end of the Cold War as well as advances in technology, a move to a more global economy, and the advent of the information age have made traditional means of defining the threat inadequate. The old threat, a well defined enemy with a known amount of weapons, armored vehicles, and men has given way to a new, often undefined threat.

This new threat is promulgated by the proliferation of weapons and technology, which is allowing potential adversaries and developing nations to rapidly improve and

modernize their armed forces. Most of these third world countries are purchasing extremely sophisticated, state of the art weaponry that could match, counter or defeat many of the weapons the U.S. Army posses. As the number of countries who modernize continues to grow, so does the threat to the U.S.

The threat the U.S. is currently facing ranges from simple to complex in scope, doctrine, organization, training, material, leadership, and soldiers. TRADOC Pamphlet 525-5 breaks down today's threat into two distinct categories, Non-Nation and Nation. Non-Nation threats consists primarily of international crime organizations, drug cartels, radical religious organizations, and terrorists groups. These Non-Nation threats are steadily increasing in number and complexity. Because of the proliferation of weapons of mass destruction, these organizations can quickly become a major threat to the U.S. security both internally and abroad. (TRADOC Pam 525-5, p. 2-3)

The other category of threat, Nation, can be broken down into four distinct subcategories; international security forces, infantry armies, armored-mechanized armies, and complex armies.

Internal security forces, in the majority of cases, are relatively small, poorly trained, and inadequately equipped.

They may be able to provide internal security for their respective countries, but they are unable to adequately defend their borders or conduct any type of extended military operation.

Most of the less developed world's armies fall into the second category, infantry armies. These armies have some armor, but it is few in number and antiquated. They rely on relatively cheap dismounted infantry for the bulk of their combat power. These armies possess extremely low-technology and have a very marginally, at best, capability to conduct combined arms operations.

The majority of all industrial nations fall into the third class referred to as armor-mechanized armies. These nations typically mount approximately 40 percent of their forces in armored vehicles. The composition of their armored forces varies, while some have state of the art weaponry, others are still utilizing outdated equipment, and most share a variety of different types of vehicles. Although these armies are different in many ways, they do share a few similar characteristics. First, they attempt to modernize selected systems to match the best systems deployed by their neighbors or potential adversaries, and second, most use generally hierarchical command, control, communication, and information (C^3I) structures. Although

these armies are not as advanced as armies from developed nations, they attempt to compensate with quantity.

The last category consists of complex, adaptive armies. These armies are from well developed countries and are normally technically and tactically advanced. Usually smaller in size they are often well trained and equipped. These complex forces posses great flexibility to seize opportunities on the battlefield as well as the ability to adapt to dynamic situations. Military operations conducted by these armies will involve increasingly high-technology equipment, joint or multinational forces, precision weapons, and enhanced situational awareness. (TRADOC Pam 525-5, p. 2-5)

It is clear that the U.S. Army faces a wide spectrum of possible threat scenarios and could face any one or a multitude of these threats. The question to ask then is which type of threat is the Army most likely to encounter? This question is not easily answered. Some experts believe that in the coming decades we will face all of these threats, some simultaneously. Others argue that large scale wars, such as Desert Storm, are a thing of the past.

In his book, *Beyond The Soviet Threat,* James Motley argues that the U.S. Army must be prepared to fight all known threats. However, he suggests that the greatest potential threat scenarios are from third world countries,

who posses predominately infantry and armor-mechanized based armies. (Motely, pgs. 31-35) Motely states:

> Most Third World countries are poor and heavily populated; their potential for development varies considerably, and they are becoming militarily stronger. They often are politically, socially, and/or ethnically divided. Nations that were dismissed decades ago as insignificant military powers now posses large stocks of modern weapons. Libya, Iraq, and Iran are excellent examples. In the early 1960s, Libya was an in significant regional actor with a small force. Today, it is one of the most heavily armed nations in the world. Although the combat proficiency of Libya's armed forces is not highly regarded, the size of its forces and the quality of the equipment represent a significant potential threat to U.S. interests. (Motley, p. 38)

The armies of the third world cannot be taken lightly, they are steadily increasing the size and lethality of their forces. Today, at least 12 third world countries are equipped with more than 1000 tanks and eight countries now possess larger armies than the U.S.

Alexandar also makes a similar argument. He suggests that the U.S. Army must be prepared for any contingency. He states, "that the U.S. Military must have a ready basket or toolbox of flexible, general-purpose forces and weapons with the capability of responding to a number of challenges and performing to a number of operations it might be called upon to undertake". (Alexandar, p. 51) Clearly, in reference to the threat spectrum, both of these authors are concerned about a too narrowly focused Army. However both agree that

the majority of future conflicts or hot spots will be in developing nations.

To meet the potential threats in the next decades, the Army must be prepared to provide a force capable of rapid projection anywhere in the world. No longer does the U.S. Military have the luxury of maintaining huge forward deployed forces to deter or quickly react to threats. Faced with increasing budget constraints and a possible force structure that may drop as low as 470,000 soldiers, the Army must capitalize on its ability to rapidly deploy well equipped forces. (Willis, p. 14)

The restructuring of the U.S. Army to a force projection army in the face of the current threat spectrum creates the requirement for highly lethal and survivable forces to conduct early-entry and follow on operations. The Operational and Organizational (O&O) Concept for the RFPI ACTD, states that:

> The U.S. Army must have the ability to rapidly move lethal forces from the Congenital United States (CONUS) to any destination and execute military missions in a very compressed time frame. These missions, as recent history has shown, will probably require the early entry force to take immediate offensive action which may result in the entire campaign ending within days as in Operation Just Cause. Currently, deployable forces must rely heavily on direct fire, line of sight, weapons to counter enemy forces, particular armor, in the close battle. These forces need enhanced capabilities to shape the close battle, and to engage the enemy outside of his weapons ranges. (O&O, p. 5)

C. FORCE XXI

1. Introduction

On March 8, 1994, Army Chief of Staff, GEN Gordon P. Sullivan, unveiled a vision for building a force for the 21st century. He called this new concept, Force XXI. The underlying philosophy of this vision is to transform the Army from an industrial age to an information age force. Although it is still not clear what this force will look like, it is clear that this redesign will impact the current force structure. The initial design of the fighting force will most likely be centered around the division, then expanded. However, this concept may be altered significantly. (Conway, P. 11-13)

2. Battle Dynamics

In addition to impacting force structure, Force XXI will also impact doctrine, techniques, and tactics. The ability of commanders, at all levels, to see the battlefield will drastically change the way the Army fights. Leaders will have more accurate and timely information in which to assist in decision making. The base document for this concept is TRADOC Pamphlet 525-5, Force XXI Operations. This pamphlet describes the implementation of Force XXI and examines a concept called battle dynamics. This concept provides valuable insight on what the future Army will look like and how it may fight.

3. Battle Command

Battle dynamics is divided into two main components, battle command and battle space. Battle command is the art of decision making, leading, and motivating informed soldiers. The ability to quickly move and process information will significantly influence force organization, command procedures, and staff operations.

The Army's vision of the future battle command is called the Army Battle Command System (ABCS) concept. This concept relies on quality soldiers and information technology. TRADOC Pamphlet 525-5 describes this concept as one that:

> Recognizes the inevitable coexistence of both hierachial and nonhierachical, or internetted, information processes. In the concept, ABCS...will use broadcast battlefield information, as well as information from other sources, and integrate that information, including real-time friendly and enemy situations, into a digitized image that can be displayed graphically in increasingly mobile and heads-up displays. (TRADOC Pam p. 4-23)

This system will allow commanders at all levels to share a common picture of the battlefield, limited to their operational needs and requirements. This new method of command will change the way a commander sees, reacts to, and fights the battle. This should provide the commander more reaction time allowing him to control or dominate a much larger area of operations.

4. Battle Space

Battle Space, the second part of battle dynamics, is closely associated with battle command. "Battle space is a concept that facilitates the type of innovative approach to warfighting required of leaders in future battles". (TRADOC Pam 525-5, p. 7 of 23) Because Army units will be more lethal and survivable, and be able to react quicker than enemy forces, the battle space they currently operate in will very likely be expanded. Platoon, company, battalion, and division areas of operations will increase in size and scope. The new smaller more effective units will be required to dominate this expanded battle space with a minimum number of soldiers.

The exact size of a units battle space will be determined by the maximum capabilities of a unit to acquire and engage the enemy. As new technologies are introduced this battle space will continue to expand. Advances is stealth, propulsion, suspension, optics, and lethality of weapons will assist in this expansion. This expansion will provide three distinct advantages for the Army.

1. More effective reconnaissance will allow units to identify, disrupt, or destroy threat forces before they can effectively engage friendly forces.

2. Survivability will increase due to a more dispersed force.

3. It will allow the Army to conduct maneuver by massing fires while maintaining the ability to rapidly move forces to critical areas of the battlefield.

5. Deep and Simultaneous Attack

TRADOC Pamphlet 525-5 states "To dominate an extended battle space will require agile and robust deep and simultaneous attack capabilities. (TRADOC Pam, p. 9 of 23) This new thinking will cause the Army to reexamine relationships between units and their influence on the battle. Depth and simultaneous attack will allow commanders to directly influence the enemy throughout his battle space. This is a critical component of Force XXI and will redefine the current ideas of the deep, close and rear battle.

In order for U.S. Forces to win quickly and decisively, commanders will have to fight the battle in all dimensions, accomplish their assigned missions, and protect the force. To accomplish this, commanders will extend the battlefield in both time and space while maintaining a high degree of situational awareness. They must be able to find and identify the majority of enemy forces in near-real time. Additionally, they must have the ability to strike and defeat located enemy elements with precision and highly lethal effects, in near-real time, and at the time and place of their choosing. (TRADOC Pam 525-200-5, p.4)

D. EFOG-M

1. History

Fiber optic development began in the Army over 20 years ago. From the early seventies, the Army was experimenting with video transmission of images from model airplanes via fiber optic cable to a ground station. The original concept centered around a remotely piloted vehicle (RPV) that collected intelligence and transmitted video pictures to the ground. (NLOS-CA, p.2) The concept grew and gave way to a high speed payout of the fiber optic link from rocket powered ballistic aerial targets. These early successful tests focused on unidirectional transmission of video images from the air vehicle to the ground. Toward the late seventies, significant improvements in the fiber optic cable allowed for the first time bi-directional transmission of both video images and missile flight commands. These flights confirmed the ability to control the missile from a ground station while simultaneously providing real time video. (Habayeb, p. 18-19)

In the early eighties, the U.S. Army Missile Command Research, Development and Engineering Center initiated a more powerful demonstration of a fiber optic missile. They launched canister configured missiles utilizing soldiers to control them instead of engineers. The test included 14 separate launches, firing at stationary and moving tanks as well as hovering helicopters, at ranges up to 10 kilometers.(PM Briefing, p.4)

These highly successful tests generated a great interest from the Army, but because this new concept crossed so many mission areas is was difficult to find a single proponent or sponsor. While viewed as a good system with many capabilities, no one branch came forward to claim it.

After the cancellation of the Sergeant York Air Defense Gun, in 1985, the U.S. Army Air Defense community expressed a desire to utilized the technology offered from this new fiber optic weapons system. While the Army was figuring out how to implement this new Air Defense weapon system, Defense Secretary Weinberger directed an Initial Operational Evaluation (IOE) of the fiber optic missile. The thought was that the IOE would give the Army some time to figure mission requirements out, while concurrently missile prototypes were being developed and tested. This plan fell victim to the budget cuts of the late eighties and the program again stalled. (NLOS-CA, p. 4)

As is typical in most programs, the military requirement was much greater than the original development concept, in fact many of the requirements pushed state of the art technology. This caused cost overruns, effectively killing the program. Even though the program was canceled the requirement for a anti-armor system was still alive. During the late eighties a renewed interest began, but this time it was in combining both the anti-armor capabilities with that of air defense against certain helicopter targets.

Studies were conducted in order to determine the best use of this system in the combined arms role.

The system as it stands today will be deployed at the brigade level, with it's main purpose to shape or eliminate the close battle. This new system exceeds the original initial operational capability (IOE), but is not as effective in both range and speed as when it was last canceled. This decrease in it's capability was not due to technology, but is due to trade-offs to keep the unit cost low.

This system has several unique features which are not found on more conventional line of site weapons. It can be fired from a concealed position far from the target, making it extremely survivable. The gunner will also have the advantage of being able to view the battlefield as the missile is under way. In addition, countermeasures are very ineffective against this system. The unique ability of the gunner to fly the missile toward the target from different angles, significantly reduces the chance of detection and counter battery fires. Additionally this weapon system can also avoid fratricide. The gunner can always take action to have the missile miss a mistaken enemy. The key to these advantages lies with the fiber optic link, which allows the gunner to fly with the missile and keeps expensive components on the ground. This allows for a low unit missile cost, which is extremely important given the past

history of the program and its financial constraints. (NLOS-CA, p. 6-7)

2. Proposed Organization

The following information was obtained from the program office in the form of a draft organization concept for the NLOS-CA weapons system paper, dated 18 March, 1995.

The twelve system NLOS-CA company is earmarked as a brigade level asset, operating as a separate company in its parent brigade. The company consists of three firing platoons of four NLOS fire units each. (see Figure 2) A platoon consists of a headquarters and four firing platforms. Each firing platform is a HMMWV heavy variant chassis (HHV) operated by a gunner (either a 11H30 staff sergeant who also functions as a section leader of two firing systems or a sergeant) and an assistant gunner who is also the vehicle driver (specialist 11H10). The headquarters includes the platoon leader and platoon sergeant and two driver/radio operators, who operate the two HHV's of the headquarters section. The platoon sergeant is the platoon logistics operator and is responsible for the platoon resupply. Both vehicles in the headquarters section require two long range radios each.

The headquarters section of the company consists of the commander, executive officer, first sergeant, communication, supply and nuclear biological and chemical (NBC) noncommissioned officers (NCO), plus two controllers (one sergeant first class 11H40 as senior controller and one

staff sergeant 11H30 as controller). The headquarters will also have an armorer, four heavy expanded mobility tactical truck (HEMTT) cargo drivers (one sergeant and three specialists) and two 77F HEMTT fuel drivers. Additionally there are two driver/radio operators for the commander's and executive officer's vehicles. The two controllers paired with the commander and executive officer will provide a 24 hour operational NLOS command and coordination center. Both the commander's and executive officer's vehicle will have three radios, one for the brigade command net, one for the fire control net, and the third for the NLOS company net.

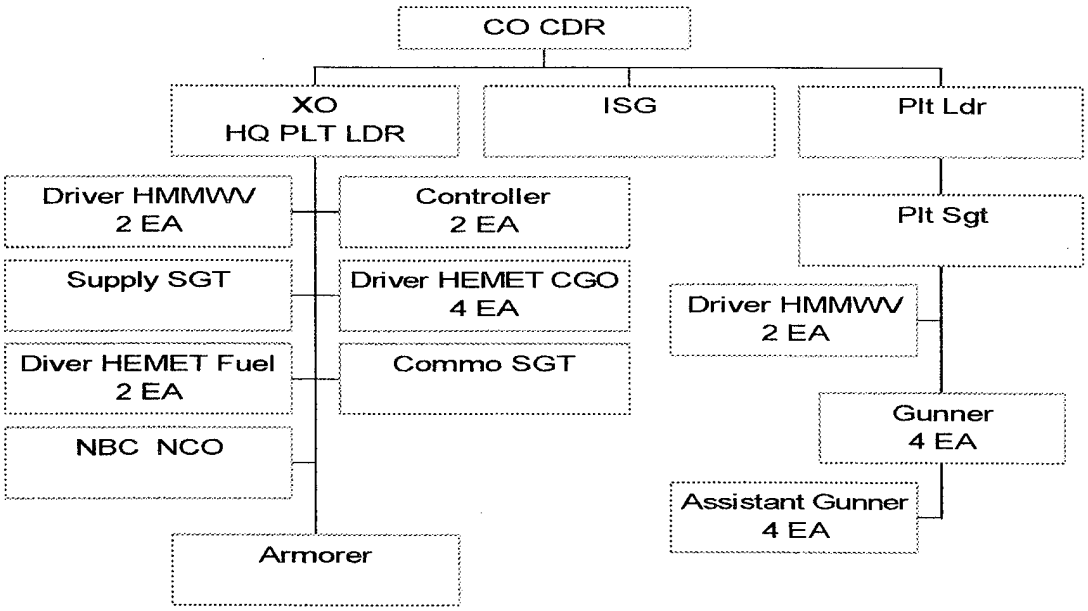

Figure 2. Company Wiring Diagram

The first sergeant and supply sergeant will function as the company logisticians. The first sergeant's vehicle (a HMMWV) will be driven by the NBC NCO and will be equipped

with one radio which can be used on the company command or brigade logistics net to facilitate logistical functions. The two HEMTT cargo vehicles will be used primarily for missile resupply for the firing platoons. The HEMTT fuel vehicle will provide petroleum, oils, and lubricants (POL) products to the platoons. Although the HMMWV is not anticipate to consume large amounts of POL, the dispersed tactical employment location of the firing platoons may dictate delivery to a variety of locations and be time intensive. Other resupply activities, such as Class I, water, ect. will be the responsibility of each platoon sergeant acting in coordination with the company first sergeant and/or supply sergeant.

Normal logistics planning remains the company commander and executive officer's responsibility. The NLOS company is dependent upon the brigade headquarters and headquarters company (HHC) for unit level vehicle maintenance, including recovery and evacuation, personnel administration, messing, and other normal support. The brigade HHC maintenance and messing sections will be increased by a total of five personnel spaces to accommodate this increased workload. The NLOS company is dependent on the forward support battalion's medical support similar to that provided to the brigade HHC. When any element of the company is attached out, the unit it is attached to assumes the support responsibility, less that of missile resupply. (NLOS-CA Organization Concept, P. 1-2)

E. SUMMARY

The U.S. Army currently faces an extremely unstable and expanding threat scenario. The proliferation of weapons from the former Soviet Union and other nations make it too easy for developing third world countries to quickly acquire large armored forces. In order to meet this challenge, the Army has developed a concept called Force XXI. This concept will redefine the Army's force structure and the way it fights. To achieve Force XXI goals, the Army must examine new technologies, doctrine, and tactics and determine the optimal mix to counter the threat. Inevitably, commanders at all levels will be called upon to do more with less, forcing the Army to redefine battle command and space. Chapter II provided essential background information necessary to examine force structure issues in relation to the EFOG-M program. Chapter III will analyze the strengths and weaknesses of the proposed force structure.

III. FORCE STRUCTURE

A. INTRODUCTION

Chapter III will focus on analyzing the strengths and weaknesses of the current proposed force structure of the EFOG-M system. To assist in that analysis some basic understanding of the methodology used to determine how this force structure was developed is necessary. Therefore, some important historical documents that I feel are extremely important in the evolution of the force structure will be discussed. These early studies provide the framework from which this force structure was built upon. Additionally, opinions from experts involved with this system will be utilized in the discussion where relevant.

B. HISTORICAL DOCUMENTATION

1. NLOS White Paper

In 1988 the Command and General Staff College (CGSC) directed that a doctrinal analysis of the NLOS system be conducted. That study came to be known as the NLOS White Paper. The study evaluated and made the following recommendations: (1) where the system should be employed and how it should be organized for combat, (2) what command, control, communication (C3) and computer software interfaces are required, (3) how missiles would be allocated and

controlled by the user, (4) how commanders would establish target priorities and what principle targets it should concentrate on, and (5) where the system should fight on the battlefield and be integrated with other systems. This study became the base document for the FY 89 Armor/Anti-armor Master Plan, the Infantry Armor Anti-armor Weapon System (IAAWS) Cost and Operational Evaluations Analysis (COEA), and the Combined Arms NLOS Concept Evaluation Program (CEP). It was also used by the force developers to assist them in determining the best organizational structure for the system to support the total Army.(White Paper, p. 1)

The study focused on analyzing three organizational structures. It examined three courses of action (COA) and discussed the advantages and disadvantages of each. The first COA depicted the NLOS as a divisional asset. The study determined that at this level the NLOS would have maximum flexibility because the division commander could allocate the NLOS to the point in the battle where he decided the most significant threat was. The major disadvantage noted was in the ability of the NLOS units to support themselves. The second COA placed NLOS at the brigade level. A significant advantage that this COA offered was that the brigade is the lowest level where all of the varied intelligence sources come together, allowing

effective synchronization of the system. However, the study did note that the brigade does not have assigned organic combat units and the brigade, as a controlling headquarters, is not organized to support an organic unit, stating " it is not consistent with current doctrine to assign organic units to a brigade". The last COA assigned the NLOS as an organic asset to the maneuver battalion. The study determined that this level of control provided the following advantages: (White Paper, p. 7)

1. Organically assigned units will provide fires in direct support of their commanders scheme of maneuver. This will provide the maneuver battalion commander with a deep battle capability.

2. Support will be inherent within organizations.

3. Habitual relationships will be established.

While this level provided some strong advantages, the study recommended that the NLOS system be organized in a separate organization at the division level. However the study was clear that the NLOS would be fought at the brigade level.

The White Paper was a detailed and thorough analysis of the doctrinal considerations of the NLOS system. However much has changed in the world situation since 1988, when this study was conducted. At that time the Soviet Union was still a world superpower and was seen as the most serious threat to the United States. The study stated "the numerically superior military forces of the Soviet/Warsaw

Pact will remain the most serious threat to the U.S. Army beyond the year 2015". (White Paper, p. 1) At this same time the Army was almost twice it's current size with 18 divisions. In just a little over a year the Soviet Union would collapse and our Army would face unparalleled downsizing. These facts have made many of the study's assumptions and recommendations invalid. Additionally, the study focused on a NLOS with a maximum effective range of 25 KM. (White Paper, p. 5) The increased range over the current system, makes the original NLOS system more doctrinally suitable to be fought at brigade or higher levels. With a reduced range of 15 KM and the fact that it may be deployed 2-8 KM behind the forward line of troops (FLOT), the NLOS organizational structure needs to be further evaluated. Even the White Paper recommended that further analysis be conducted to confirm the doctrinal recommendations made. (White Paper, p. 17)

2. Close Support Study Group (CSSG) IV

In response to the guidance contained in a letter of instruction from GEN Maxwell Thurman, the TRADOC commander, the Close Support Study Group IV was created. GEN Thurman instructed the CSSG to examine the possibility of a direct support, indirect fire support battalion - including 155mm howitzers, 120mm mortars, and NLOS - organic to the brigade.

Further guidance was given to the group in reference to NLOS specifically. The group was instructed to develop an employment concept that would maximize the impact of the system on the battlefield. The CSSG examined various organization considerations, roles, and proponency issues. Recommendations were made where appropriate and suggestions for further studies where required.

The most important findings and recommendations made by the group are listed below. (CSSG IV, p. 4-1)

1. Separate organizations for air defense (AD) and anti-tank (AT) NLOS. The group recommended that AT NLOS organizations be established that are distinct from the AD NLOS organizations.

2. Echelon for employment of AT NLOS in the division. The CSSG found that 1) the battalion task force lacks the access to real time targeting intelligence to fully maximize and employ NLOS and 2) NLOS cannot be properly used in the division commander's battle. Based on this and other studies, the group recommended that the brigade be the optimum level to command, control, and fight NLOS.

3. Branch proponent for AT NLOS. The group suggested that NLOS is a fire support system that is fought like artillery and therefore proponency for AT NLOS should be assigned to the Field Artillery branch.

4. Organization for AT NLOS in the heavy division. The group recommended that a battery, commanded by a FA captain, be created and provided to each maneuver brigade.

In summary, the CSSG IV found that the AT NLOS system is a weapon with the potential to have a significant positive impact on the battlefield. They also believed that it is a fire support system best controlled by the fire

support C2 system and recommended proponency be given to the Field Artillery. This study was conducted and concluded while the CEP was beginning it's study efforts. Again, much has changed that has made many of the findings and recommendations no longer appropriate. For example, in reference to echelon for employment, the group concluded that the battalion task force lacked the necessary real time targeting intelligence information to fully maximize the potential of the NLOS.(CSSG IV, pgs. 4-5, 4-10) While true at the time, the implementation of Force XXI and technological advances will provide lower echelon units with more than ample intelligence information to effectively control the system.

3. Concept Evaluation Program (CEP)

Much of the information used to develop this chapter is contained in the Combined Arms NLOS Concept Evaluation Program (CEP) dated 1990. This is the latest version of the CEP available. The purpose of the CEP was to experiment and asses the NLOS warfighting concept laid out in the CGSC White Paper dated 18 March, 1988. The CEP was commissioned by the Deputy Chief of Staff for Combat Developments (DCSCD) TRADOC to investigate the command and control (C2) implications of NLOS and the anti-tank role. The main objectives of this study were to (1) examine the ability of the current and proposed C2 systems to manage NLOS target

data and C2 requirements, (2) determine the best uses of NLOS given C2 and weapon system capabilities and limitations, (3) determine the best organizational level (force structure) to employ NLOS, and (4) support a proponency decision. (CEP, p. 4-1)

The CEP was based on using NLOS in both the Air Defense (AD) and Anti-Tank (AT) roles. It was assumed that 18 NLOS systems per division would be allotted to the AD role while 36 systems would be allotted to the AT role. The study was also based on both a heavy and light scenario. The heavy version was envisioned to be employed on a Multiple Launched Rocket System (MLRS) chassis and have the capability to hold 12 missiles. The light version foreseen in the study was similar to the current version. Another critical assumption made was that the maximum effective range of the NLOS missile would be 25 KM.

Using these assumptions and results from various other studies that were conducted, the CEP concluded that (1) the NLOS could operate in a dual AD/AT role and be effectively controlled and synchronized by a centralized brigade cell, (2) C2 would be optimized at brigade because of the C2 sensor data and integration assets at the brigade headquarters, and (3) that there be a dual proponency with the Air Defense School being the proponent for the NLOS-AD and the Field Artillery School being the proponent for the NLOS-AT. (CEP, pgs. 1-21 to 1-40)

The recommendations, while well-founded at the time the study was conducted, are somewhat less fitting today. First the maximum effective range of the EFOG-M is 15 KM. The CEP based it's recommendations on a system that could reach out to 25 KM and even suggested that the NLOS be provided with an extended range capability. This led to a false belief that the system, that was doctrinally supposed to be deployed between 2-8 KM behind the FLOT, would be able to provide deep coverage for the brigade. The range limitations of the current system make this a less viable option and redefines the concept of deep and close battle as discussed in this study.

Another issue that may have effected the recommendations made by the CEP was the issue of proponency. It is feasible that the current proponent of the system, the Infantry School, was not correctly represented during the analysis. The CEP focused primarily on AD and FA as the proponents of the system and therefore, some of the conclusions drawn from this study may be fallacious. For example, out of all the various studies that the CEP used only one, the study submitted by the Infantry School, recommended that the NLOS be controlled at battalion level as opposed to the CEP's recommendation that it be controlled at brigade. (CEP, p. 1-13)

Finally, the CEP stated that there was a need to perform further analysis to (1) determine the number of NLOS-AT required, (2) determine the optimal number of

missiles required on a launcher, (3) develop the most efficient NLOS-AT organization, and (4) examine a tradeoff between the need for NLOS and the need for other anti-tank systems in a combined arms approach. (CEP, p. 1-41)

In summary, at the time the CEP was conducted the recommendations were based on known or believed capabilities. Much has changed since this study was conducted, however in spite of that little has changed conceptually with regard toward force structure. Because some of the original assumptions are no longer valid, further studies are required to determine the optimal force structure.

C. STRENGTHS AND WEAKNESSES OF FORCE STRUCTURE

1. Strengths

The proposed force structure offers numerous advantages as pointed out in studies conducted to date. There are however only two major advantages that stand out. These advantages are (1) the added capability given to the brigade commander and (2) the availability of intelligence information.

a. Added Capability

The greatest advantage this structure offers is in the added capability it gives the brigade commander. The ability to influence the enemy before he can engage your force is critical. If you can cause the enemy to react in a way he has not planned for, you can control his actions or shape the battle. Obviously the further away from the FLOT

you can achieve this the more effective and advantageous it will be. By establishing a separate organic EFOG-M company at brigade, the brigade commander will have the ability to effect the deep battle. He will be able to mass fires against enemy forces at critical points on the battlefield. This will give him increased flexibility when dealing with counterattack forces or major units about to make a penetration. In the attack it would allow the commander to gain real time intelligence on deep targets while surgically destroying enemy forces. Additionally, the brigade can control fires across lower unit boundaries. For example, if a counterattack force crosses a battalion boundary, the brigade can continuously control and maintain effective fires, essentially extending the effectiveness of the EFOG-M system. (White Paper, p. 17)

b. Intelligence

The other major advantage that this structure offers is in the intelligence area. To maximize the effectiveness of the EFOG-M, it is essential that real time intelligence information be available. The brigade is currently the lowest level where real time intelligence is available to adequately control the EFOG-M. Most previous studies agreed that the brigade has the availability of sensors that will provide intelligence at ranges required to effectively control the EFOG-M.

2. Weaknesses

There are numerous weaknesses that can be associated with establishing a separate organic EFOG-M company at brigade. Some of the disadvantages such as cost, personnel, logistics, training, and habitual relationships are inherent in the proposed force structure, while others, such as range and future availability of intelligence information have come about due to rapid advances in technology.

a. Cost and Personnel

One of the most critical disadvantages that this force structure offers is in the area of cost. Because it is difficult to discuss cost without examining personnel, both will be discussed simultaneously. The increase in cost can be directly associated with both an increase in personnel and equipment. Included in this cost are all the ancillary costs such as personnel benefits, housing, medical, logistical costs, ect. Establishing a separate company at brigade will increase the Army's force structure by 53 personnel per EFOG-M company.(NLOS-CA Operational Concept, p. 1) A key point to mention is that 17 out of the 53 personnel per company reside in the company headquarters section. Figure 3 provides a wiring diagram of the proposed EFOG-M company.

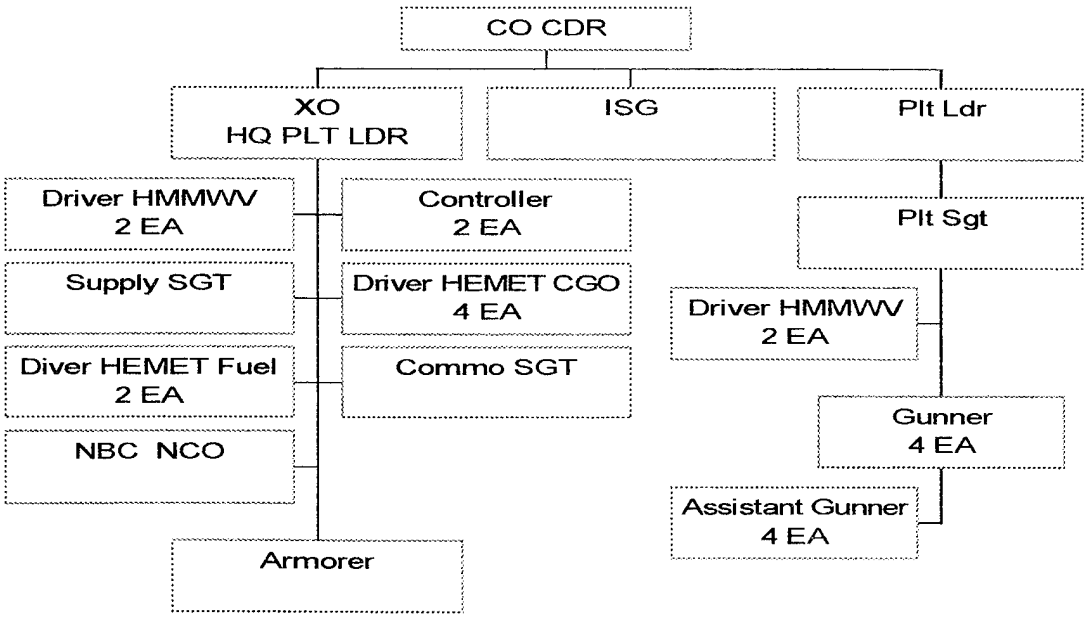

Figure 3. Company Wiring Diagram.

The number of personnel quoted for each EFOG-M does not include additional personnel required to plus up the brigade TOC or other personnel increases such as administrative, maintenance (at both the unit and direct support level), cooks, and other support personnel.

The establishment of a 53 man EFOG-M company per brigade will cause a significant burden on an already over taxed force structure, especially in an environment characterized by decreasing budgets and the possibility of a reduction of 20,000 additional personnel from the Army's force structure. This is a notable weakness that may be extremely difficult to overcome. What branch will take the necessary cuts to allow the Infantry a plus up? Obviously

this will be a difficult question to answer by the Army's force developers and leadership.

b. Logistics

Another disadvantage that this structure offers lies within the logistical arena. Each EFOG-M company will bring with it a large amount of organic vehicles and equipment to support and maintain. With this increase in equipment will come an increase in spare parts, tools and test equipment at all maintenance levels. Will the brigade be able to handle this increased logistical burden? Some of the studies suggest that it will not be able to adequately provide the necessary support to sufficiently maintain an EFOG-M company. In fact the CSSG IV study stated "The brigade headquarters lacks the assets to provide logistical and administrative support" (CSSG, p. 4-23) and the White Paper study suggested that "the brigade is not currently organized to support an organic unit". (White Paper, p. 7) More in-depth analysis needs to be conducted to determine if the brigade, with minimal logistical assets, can handle this new logistical requirement.

c. Training and Habitual Relationships

Other areas that deserve attention and can be viewed as weaknesses are training and the concept of habitual relationships. All Army units must have the necessary support system available to adequately train for their wartime missions. The brigade currently is ill suited to train organic units. In fact, several studies cited this

as a serious disadvantage for establishing a separate EFOG-M company at the brigade. The brigade just does not have the resources to allow a company to independently train it's Mission Essential Task List (METL) to standard.

Another key issue closely tied to training is the concept of habitual relationships. It is imperative that units maintain a habitual relationship with units that they support. The benefits derived from these relationships can not be overlooked. Bonds are developed, leaders understand each others strengths and weaknesses, and combat effectiveness increases when units are allowed to build these habitual relationships. The White Paper suggests that "The only way combat power can be reliably and consistently brought together is with units that train together on a regular basis, and understand each other".(White Paper, p. 17) This mutual understanding and shared base of knowledge helps units to develop strong ties and perform to higher standards. This philosophy was one of the main reasons why the Army uses task force organizations today. Under the current proposed force structure, the brigade commander will assign EFOG-M platoons to units based on the factors of METT-T. These assignments will most likely change with every situation, hindering units to form habitual relationships.

d. Summary

Establishing an EFOG-M company organic to the brigade offers both advantages and disadvantages. While it is true that the brigade has the necessary intelligence information available to effectively command and control EFOG-M firing units, there are serious concerns regarding some of the disadvantages previously discussed.

The main disadvantage, cost (to include personnel and equipment) cannot be ignored especially in such a fiscally austere period marked by the possibility of further personnel reductions. The EFOG-M program has had a long history of problems, most associated with uninterested users and cost. If this technology is to be successfully inserted into the Army's force structure it will be extremely crucial that it be done in the most economical manner without reducing the combat effectiveness this system offers.

Finally a precarious weakness associated with this concept lies within the studies themselves. Most of these studies are outdated. Many of the assumptions used in the formulation of these studies are inaccurate causing some of the recommendations to be no longer valid. This information combined with the numerous disadvantages discussed make the establishment of a EFOG-M company organic to the brigade a significantly less practicable option.

D. CHAPTER SUMMARY

This chapter discussed some of the key studies conducted on the EFOG-M that were instrumental in the development of the proposed force structure. Background information, individual recommendations, and discussion of assumptions were provided for each study. These studies were used to lay the framework for the discussion of the proposed strengths and weaknesses. The proposed force structure has definite advantages, but through time many have become overshadowed by the growing number of disadvantages. Chapter IV will present alternative force structures, analyze their strenghts and weaknesses, and compare them against the current structure.

IV. ALTERNATE FORCE STRUCTURES

A. INTRODUCTION

Chapter III discussed some of the most significant strengths and weaknesses associated with the current proposed force structure. This chapter will present two alternative force structures and discuss the relevant advantages and disadvantages of both. Course of action (COA) one is a composite (TOW/EFOG-M) anti-tank platoon (see Figures 5 and 6) while COA two advocates the creation of a separate EFOG-M platoon organic to the battalion. Both courses of action offer significant advantages over the current proposed force structure, which hereafter will be referred to as the base structure. Because both courses of action advocate a platoon organization organic to the battalion instead of the brigade level, as is the case with the base structure, some general advantages and disadvantages between both levels will be examined first. After this discussion the strengths and weaknesses of each COA will be examined independently and compared against the base structure.

B. BRIGADE/BATTALION COMPARISON

As already discussed, the base structure is an EFOG-M company organic to the brigade. Both alternative courses of action advocate either changing the existing light battalion

anti-tank platoon or creating a new EFOG-M platoon organic to the battalion. Deploying the EFOG-M system at battalion level verses brigade offers some significant advantages.

First, most previous studies concluded that the brigade was the best level to deploy and fight the system. This was proposed mainly because the brigade was the lowest level where all the intelligence information came together necessary to effectively command and control the EFOG-M system. However, because of technological advances made within the last few years and the advent of Force XXI this is no longer a valid argument. Force XXI will provide the battalion commander enough critical intelligence information in real-time to more than effectively command and control EFOG-M units.

Additionally, past studies argued that the long range of the EFOG-M logically made it a brigade level asset. While true at the time most of these studies were conducted, this is too no longer a valid argument. Force XXI is reexamining the concepts of the deep and close battle, battle command, and battle space. The focus of Force XXI is not just to insert new technologies, but also to redefine the composition of units and how they doctrinally fight on the battlefield. TRADOC Pamphelet 525-5 discusses in depth the deep and close battle, battle command, and battle space.

It is clear from this document that future units will have to be smaller, more lethal, and responsible for increased space on the battlefield. Using this philosophy it logically makes sense to let the battalion commander fight the EFOG-M system. Additionally, the 15 KM range of the system, which will be doctrinally deployed from 2 KM to 8 KM behind the FLOT, realistically produces a maximum effective range of 7 KM to 13 KM, not quite a deep weapon system as defined by today's standards. Clearly with this reduced range and the new philosophy promulgated in the TRADOC 525 series, the EFOG-M would be more logically fought at the battalion level.

Another advantage this level of deployment offers is in the area of intelligence. The battalion commander would be able to gain extraordinary real-time intelligence each time a missile is launched. Currently the EFOG-M is the only weapon system that can provide real-time intelligence enroute to the target area as well as confirming target presence in the engagement area. (CEP, p.1-26) This unique ability will provide the battalion commander the flexibility to see the target and influence the battle before the enemy can engage his forces.

The battalion commander and his staff will also be able to conduct more accurate battle damage assessment while

engaging enemy forces. The battle damage assessment gained from the EFOG-M flights can be used to provide tactical intelligence to the battalion S-2 (intelligence officer). For example, in this role the EFOG-M could accurately locate enemy forces, as well as gain information on strength and composition, just prior to the actual maneuver force's attack, providing the means for the battalion commander to time and orient his attack. This intelligence would also provide the battalion fire support officer (FSO) the real-time information to coordinate attacks by other fire support means.

As already discussed in Chapter III, the brigade is currently ill suited to train organic units. The battalion is logically a more effective and efficient organization in which to train organic units. Closely tied to training is the concept of habitual relationships. Again, as pointed out in Chapter III, this was a disadvantage for the base structure. However, this is not the case for the battalion. EFOG-M units deployed at the battalion level would be an integral part of the organization and be able to develop the crucial relationships necessary to enhance combat effectiveness.

Finally the area of logistics provides another advantage for the battalion over the brigade. It has

already been shown that the brigade is not best organized to logistically support an organic EFOG-M company. On the other hand, the battalion has an established logistical support system that is extremely responsive and already organized to provide such support. Although both levels would require some additional logistical support personnel, the battalion is more advantageous.

In summary there are numerous advantages that suggest the battalion is a more effective organization to train, maintain, and fight EFOG-M units. The added flexibility and increased combat power that could be provided to the battalion commander can assist in the implementation of Force XXI initiatives.

C. COURSE OF ACTION ONE

1. General

Course of action one is centered around the already existing anti-armor platoon in the light infantry battalion. The platoon is organized as part of the headquarters and headquarters company. The anti-armor platoon consists of four TOW weapon systems mounted on HMMWV vehicles with two additional HMMWVs used for command and control. The platoon is designed to operate in two sections, with each section consisting of two TOW vehicles and one command and control vehicle. The light infantry battalion, HHC, and the anti-

armor platoon are illustrated in Figure 4. (FM 7-72, p. 1-12)

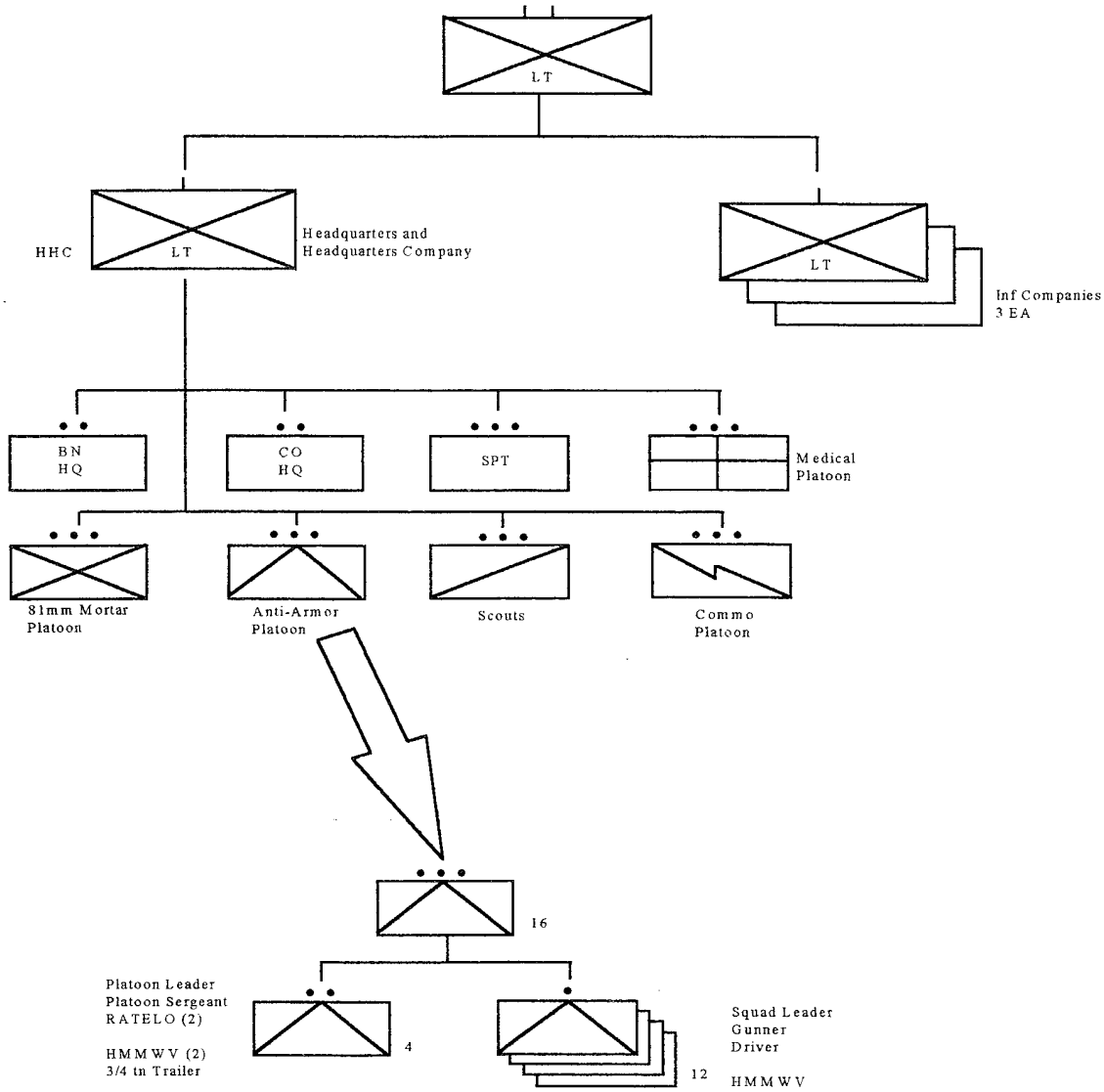

Figure 4. Light Infantry Battalion Organization

COA one is created by removing one TOW section, consisting of two TOW vehicles and six personnel, from the anti-tank platoon and by adding one EFOG-M section. The addition of the EFOG-M section will add two EFOG-M vehicles and six personnel. Two of that six personnel are two E-7

controllers added to the platoon headquarters to facilitate 24 hour operations. Figure 5 illustrates the proposed organization. There is no requirement to add any logistical support such as fuel trucks, cargo trucks, or additional drivers.

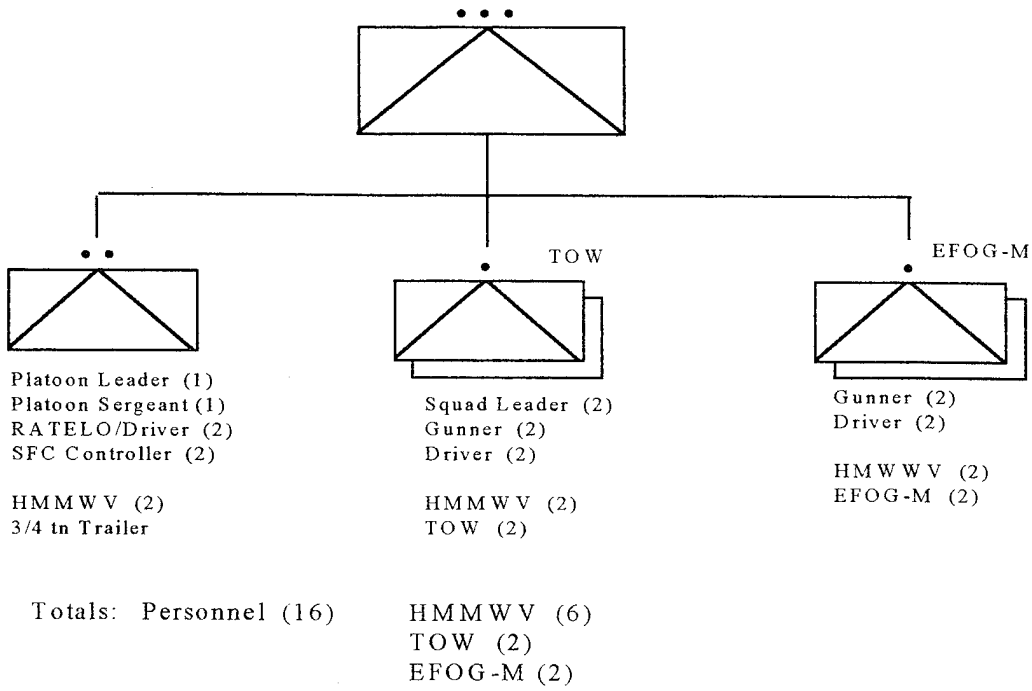

Figure 5. Proposed Anti-armor Platoon Organization

The only other personnel required may be in the maintenance area, however existing mechanics should be able to receive the required training to perform the limited organizational maintenance that the EFOG-M requires. (NLOS-CA MPR LIA, p. 3-6)

The platoon would operate much as it does now, providing anti-armor support of the light infantry

battalion. The main difference is that the battalion commander would now have the ability to destroy threat armor vehicles well beyond the TOWs limited line of sight range.

2. Strengths

The principal strength that this proposed organization offers is in cost. This cost is associated with personnel and equipment. This COA will cost substantially less than the base structure. Also, this COA adds no personnel to the light infantry battalion's force structure. The anti-armor platoon's strength would remain fixed at 16 personnel. Furthermore, there would be the obvious addition of equipment that is directly associated with the EFOG-M system, but the platoon's table of organization and equipment (TO&E) would change little. Overall the procurement cost could be cut in half. This is due to a reduction of 50% of the amount of EFOG-M systems required. In the base structure each brigade would receive 12 EFOG-M systems, with this COA only 6 systems would be required per brigade (2 per battalion).

How fast rapid deployment forces can move from home station to a deployment site is critical. Hinged on this is the amount of sorties required and then available to move each units personnel and equipment. A serious disadvantage for the base structure is the additional airlift required

for the 53 plus personnel, vehicles, and equipment that make up the EFOG-M company. An advantage for COA one is that it's implementation requires no additional airlift. In fact, a battalion in COA one would require the same amount of aircraft to move it's personnel and equipment as it did previously. In a period of reduced resources for all services this becomes a major advantage for COA one.

Another advantage that this course of action offers is in the ease of implementation. It is difficult to start a new organization in any unit. This COA negates that difficulty because it is only adding to an already established organization. The insertion of one section would pose much less of a burden than the creation of an entirely new company. The key is in the battalion's infrastructure. It is already well established and able to adequately adjust to this COA. The brigade (the base structure), on the other hand, does not currently possess that capability.

Logistical support is also a strong advantage for this COA. The battalion's logistical support system is already in existence and sufficient to handle the anti-armor platoon's logistical requirements. Because the TOW and EFOG-M missile are similar in both weight and size there would be no additional logistical cargo carrying capacity

required to support the new platoon organization. The battalion would not have to be provided with any additional cargo vehicles which is not the case in the base structure. Also, there would be no change in fuel consumption negating any requirement for addition POL vehicles. Because the platoon's strength remains the same there would be no requirement for other logistical or support personnel such as cooks or mechanics (at the organizational level).

Finally this COA provides numerous other advantages over the base structure as previously discussed. These areas include training, habitual relationships, and ease of command and control. The base structure also required addition personnel to run a brigade command and control cell, this COA would not require any additional personnel in the battalion TOC. Other key advantages are the increase in continuous dedicated combat power and the real-time intelligence that would be available to the battalion commander, increasing the battalion's overall combat effectiveness.

3. Weaknesses

The predominate weakness affiliated with this COA is in the reduction of potential combat power. While the reduced number of systems is a strength due to cost savings, it is a weakness for combat power. This COA would only provide half

of the EFOG-M systems that the base structure would provide. Also this COA removes one TOW section per battalion. However, it is important to note that both this COA and the base structure increase the battalion's current capability to destroy threat armor vehicles at increased ranges. There are definite cost trade-offs associated with this COA. How much can the Army afford to spend relative to the increase in combat power is a critical question that will have to be examined and answered by Army leadership.

4. Summary

This COA provides an increased combat power to the light infantry battalion at a significant cost reduction as compared to the base structure. It also has numerous other advantages such as the ease of implementation, logistics, and the need for no additional airlift capacity that the base structure does not allow. One disadvantage is in the reduction of potential combat power. This trade-off may be necessary especially in the fiscally austere period that characterizes the environment that the Army must operate in for the foreseeable future.

D. COURSE OF ACTION TWO

1. General

Course of action two consists of creating a separate EFOG-M platoon organic to the light infantry battalion.

This would add an additional platoon to the headquarters and headquarters company of the battalion. The platoon would be organized much like the platoon in the base structure, except that two E-7 controllers would be added to the platoon headquarters instead of a company headquarters. The EFOG-M platoon would consist of a platoon headquarters section and four firing units, for a combined total of 14 personnel. Figure 6 illustrates the platoon organization.

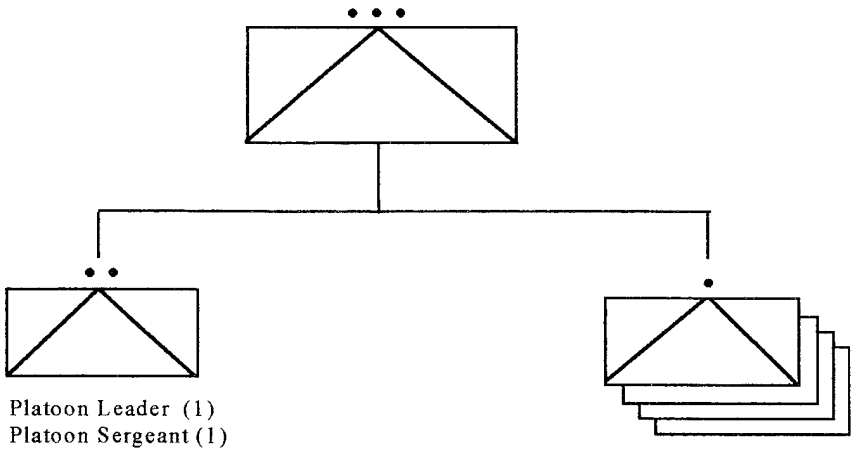

Totals: Personnel (14) HMMWV (6)
EFOG-M (2)

Figure 6. Separate EFOG-M Platoon

The battalion's logistical hauling and cargo capacity would have to be increased to handle this additional requirement. One cargo truck and the two associated drivers per battalion

would be sufficient to handle this increase. Also this COA would require an additional mechanic per battalion to offset the increase in vehicles.

2. Strengths

COA two offers many of the same advantages as COA one. Cost is still an advantage over the base structure because COA two does not require the company headquarters that the base structure proposes. The removal of 17 personnel and all related equipment will save money. Although there are cost savings associated with the implementation of this COA they are not as sizable as in COA one.

Logistical support is also an advantage for this COA. The battalion's preexisting logistical support system will require some minor plus-ups in equipment and personnel. However, they will be slightly less than the base structure. This COA requires the addition of one cargo truck and two drivers per battalion, equaling the base structure's requirement of three trucks (two cargo and one POL) and six drivers. Although both this COA and the base structure are similar in the amount of logistical assets that would be required, this category is considered as a strength primarily due to the quick logistical response time the battalion can provide.

Additional strengths that this COA offers, which have already been discussed in reference to COA one, include training and habitual relationships. Again this COA will provide a more effective training environment and a consistent habitual relationship when compared against base structure.

The last advantage this COA offers over the base structure is that this COA would require less airlift capacity. The base structure requires an additional airlift capacity for the company headquarters section. This includes airlift for two HMMWV's, 17 plus personnel, and related equipment. Because COA two would not have to lift the company headquarters section this becomes another advantage when compared to the base structure.

3. Weaknesses

Ease of implementation, an advantage for COA one, becomes a disadvantage for this COA. It would be as difficult to establish a new platoon organization at battalion level as it would in establishing a separate company at brigade. Therefore, this COA shares a similar weakness with the base structure.

4. Summary

COA two does offer advantages over the base structure. Most notable are in areas of cost, airlift capacity,

training, and habitual relationships. COA two also provides an equal amount of combat power for the brigade when compared to the base structure, but at a reduced cost. It is important to note that this COA offers all of the advantages already discussed that the battalion level provides over the brigade level. Finally, this COA proves to be a marginal improvement over the base structure when weighing the advantages over the disadvantages.

E. CHAPTER SUMMARY

This chapter first compared an EFOG-M unit, organic to a battalion, against the base structure which establishes a separate EFOG-M company organic to the brigade. Comparisons of two alternative courses of action were then discussed. Both courses of action advocate the reorganization or organization of platoon size EFOG-M units at the battalion level. Advantages and disadvantages were examined for each course of action and independently compared against the base structure. Figure 7 provides a summary matrix of advantages and disadvantages for the base structure and both courses of action. Chapter V will provide overall conclusions and make recommendations on which COA, if any, should be considered by the Army as a more effective way of ensuring the successful integration of the EFOG-M technology into the force structure.

	Advantages	Disadvantages
Base Structure	•Provides intell to brigade •Adequate availability of intell information •Combat Power, provides 12 systems per brigade	•Provides no real-time video intell to battalion commander •Highest cost of all options •Most difficult to implement •Training •Ill suited to logistically support •Habitual relationships •Largest airlift requirement •Reduced range of system (25KM vs 15KM) •Most significant MTOE changes
COA One	•Cost, lowest cost COA to implement •No additional airlift required •Little change to MTOE •Ease of implementation •Logistical support system in place •Correct level to train units •Provides habitual relationships •Provides real-time video intell to battalion commander •Supports Force XXI initiatives	•Combat power, provides only six systems per brigade
COA Two	•Cost, slightly lower cost than base •Additional airlift required, but slightly less than base •Logistical support system in place, but will require plus-up •Correct level to train units •Provides habitual relationships •Provides real-time video intell to battalion commander •Supports Force XXI initiatives •Combat power, provides 12 systems per brigade	•Difficult to implement •Significant MTOE changes

Figure 7. Summary Advantage/Disadvantage Matrix

V. CONCLUSIONS AND RECOMMENDATIONS

A. SUMMARY

This thesis examined the force structure issues effecting the Enhanced Fiber Optic Guided Missile program. It began by providing some general background information on the history of the system. Further background information was provided on the current threat and proposed force structure. Following this key studies, that were instrumental in the development of the proposed force structure, were discussed. These studies were used to lay the foundation for the discussion of the strengths and weaknesses of the current proposed force structure that followed.

Finally, two alternative force structures were proposed and then compared individually against the proposed force structure. Both alternatives advocated a battalion level EFOG-M organization verses a brigade level, as proposed by the current force structure. This study attempted to show why some of the initial assumptions and arguments used to support a brigade level organization are no longer valid. Numerous advantages were presented that suggest in the Force XXI Army of tomorrow, the battalion is the most effective organization to train, maintain, and fight the EFOG-M system.

B. ANSWERS TO RESEARCH QUESTIONS

1. *Is the current proposed force structure of the EFOG-M system the optimal solution and does it maximize the system's unique and diverse capabilities?*

This study showed that the current proposed force structure is not the optimal solution and does not fully maximize the system's unique and diverse capabilities. This is especially true in today's environment which is characterized by reductions in defense budgets and concepts espoused in the Force XXI vision. This system can be deployed at the battalion level at a significant cost reduction yet still provide an increase in the overall current battalion combat power. The bottom line is that the battalion commander will have the ability to effectively gain real-time intelligence and destroy enemy armored vehicles at increased ranges, enhancing the combat capability of the battalion.

2. *What is the history of the EFOG-M program?*

The EFOG-M, which began in the early seventies, is the only complete weapon system in the Army's history which has been developed through a militarized stage totally by Army research laboratories. (PM Briefing, p. 3) It's past is plagued with problems ranging from lack of funding to lack of interested sponsors. In the early eighties the U.S.

Army Missile Command conducted several tests that successfully demonstrated the systems capabilities, destroying stationary and moving tanks as well as hovering helicopters. Even with this successful record the program was canceled. But after the termination of the Sergeant York Air-defense Weapon system, there was a renewed interest in exploiting the unique anti-armor and air defense capabilities the EFOG-M offered.

3. *What is the current force structure?*

The current proposed force structure of the EFOG-M is an separate company organic to the brigade. The company will have a headquarters section and three firing platoons. Each platoon will have one headquarters section and four firing sections. This organization will provide twelve firing systems per brigade. Additional personnel and logistical requirements are required and were discussed in detail in Chapter II.

4. *What is the current status of the EFOG-M program?*

The Enhanced Fiber Optic Guided Missile, is currently being developed as part of the Rapid Force Projection Initiative Advanced Concept Technology Demonstration (RFPI ACTD). The RFPI ACTD will consist of a large scale Advanced Warfighting Experiment in Fiscal Year (FY) 98 followed by an extended users evaluation period in FY 99-00. In May of

1995 the U.S. Army awarded Raytheon Electronic Systems a $39.5 million contract for the ACTD program with options for an additional $100 million.

5. ***Are there feasible alternative force structures, not previously studied, that may better utilize the capabilities of the EFOG-M system?***

This study examined two possible battalion level alternative force structures for the EFOG-M. Other past studies only compared organizational levels, such as division, brigade, and battalion against each other and did not examine platoon organizations organic to the battalion. This was primarily due to the fact that most of the studies concluded that the brigade was the optimum level to deploy the EFOG-M system and therefore battalion level organizations were not explored. It is important to note that one study, conducted by the present sponsor, the infantry, advocated battalion control. This thesis has shown that deploying the EFOG-M as a platoon organic to the battalion offers many distinct advantages over the current proposed force structure.

C. RECOMMENDATION

In order for the Army to capitalize on the technology that the EFOG-M offers it must be able to quickly field the system to units as part of the RFPI ACTD concept. Because of this systems variegated history, a significant reduction

in procurement dollars, and the possible declining level of enthusiasm on the part of the user it is imperative that the Army choose an option that it can afford. COA one, a reorganized anti-armor platoon, gives the Army that capability. It provides the light infantry battalion the non-line of sight technology to destroy enemy armored threat vehicles and other hard targets at long ranges. It also furnishes this capability for the lowest cost, while COA two and the base structure are considerably more expensive to implement. COA one also requires the least number of changes to a unit's MTO&E. COA two and the base structure would require numerous changes to existing MTO&Es. Another major advantage for COA one is that it does not require any additional airlift capacity. This is because there is no net increase in vehicles or personnel to the battalion. However, both COA two and the base structure would require a significant increase in the amount of aircraft required to move the additional vehicles and personnel. COA one also provides numerous other advantages in areas the base structure does not such as training, logistical support, and habitual relationships. Finally this COA supports Force XXI initiatives. It gives the battalion commander the ability to increase his battle command and space, effectively increasing the battalion's lethality, while influencing larger areas of the battlefield. It is therefore strongly

recommended that the Army consider changing it's current plan of deploying the EFOG-M at brigade level and field the system at battalion level. The Army can field COA one to light infantry battalions and COA two, a new platoon organization, to mechanized battalions if that requirement is still deemed necessary and is within the Army's budget.

D. AREAS FOR FURTHER RESEARCH

Further research should be conducted on force structure issues relating to other weapon systems, particularly those that are in the process of development. Case studies in this area will allow future program managers, users, and force developers to better synchronize the process to allow for a more rapid insertion of promising technologies into the Army's force structure.

This study has shown that the fielding of a system can be placed in jeopardy if the user does not have a well defined plan on how deploy it. Further research should be conducted to determine the optimal process that can be used to develop force structures for new weapon systems. This will help to ensure that new and promising technologies are not swept under the rug simply because the it could not be determined who should fight the system and where it should be fought.

Finally, the RFPI ACTD concept needs to be studied as it progresses, to determine if it was successful in

achieving it's goals and objectives. This new way of integrating systems into the Army may prove to be tremendously advantageous, however it may also prove to be a cause for force structure issues similar to what has been discussed in this study. For example, if we are not sure where we want to place a new system and wait for a technology demonstration to figure it out, it may be too late in the process possibly threatening a systems survival.

E. CONCLUSIONS

EFOG-M technology offers the Army a unique capability to provide real-time intelligence and increased combat power to the battalion commander. Force structure issues, as well as other factors, have hampered this program. Lack of funding has canceled this program in the past and remains a major threat for it's future. The EFOG-M currently fills the Army's need for an extremely lethal, survivable, yet highly deployable and flexible system. Force XXI provides the Army a great opportunity to reexamine it's structure and how it will fight. The EFOG-M organization recommended in this study will aid the Army in it's efforts to implement Force XXI initiatives.

LIST OF REFERENCES

Alexander, Bevin, The Future of Warfare, WW Norton Company, New York, NY, 1995.

Allen, Elizabeth, Raytheon Selected as EFOG-M Prime Contractor, EFOG-M Press Release, Raytheon Company, Public Relations, Lexington, MA May 15, 1995.

Close Support Study Group IV, Combat Development Study, Headquarters, U.S. Army Field Artillery School, Fort Sill, Oklahoma, Final Report, Volume II, June 1989.

Combined Arms Non-line of Sight (CA-NLOS) Concept Evaluation Program (CEP), Final Report, Volume II, April 1, 1990.

Draft Operational Concept for the Non-line of Sight Combined Arms (NLOS-CA) Weapon System, March 18, 1995.

Draft Organizational Concept for the Non-line of Sight Combined Arms (NLOS-CA) Weapons System, March 18, 1995.

FM 7-72, Light Infantry Battalion, Headquarters Department of the Army, Washington, D.C., March 16, 1987.

Habayeb, Abdual R. Fiber Optic Guided Weapons, IEEE, February, 1991.

Motley, James, Berry, Beyond The Soviet Threat, The U.S. Army in a Post-Cold War Environment, Lexington Books, 1991.

NLOS-CA, U.S. Army Development of a Fiber Optic Guided Missile System, Non-line of Sight Combined Arms, Unauthored report, February 5, 1993.

Non-line of Sight-Combined Arms (NLOS-CA), Manpower Estimate Report (MER), NLOS-CA Project Management Office, Redstone Arsenal, AL, October, 1993.

Non-line of Sight-Combined Arms (NLOS-CA) Manpower, Personnel, and Logistics Impact Analysis (LIA), U.S. Army Training and Doctrine Command, Final Technical Report, Volume I, November 15, 1993.

Non-line of Sight (NLOS) Guided Missile System, Integrated Logistics Support Plan, NLOS Project Office, Redstone Arsenal, AL, 1991.

Non Line of Sight (NLOS) White Paper, U.S. Army Combined Arms Development Center, Fort Leavenworth, Kansas, March 18, 1988.

Operational and Organizational (O&O) Concept, Rapid Force Projection Initiative Advanced Concepts and Technology Demonstration, Dismounted Battlespace Lab, Fort Benning, GA, February 24, 1995.

PM Briefing, The United States Development of a Fiber Optic Guided Missile, Unauthored, Not dated.

Product Data Sheet Missile Systems Division, Enhanced Fiber Optic Guided - Missile, Raytheon, Bedford, MA October, 1994.

Request for Proposal DAAH01-94-R-0005, Enhanced Fiber Optic Guided Missile (EFOG-M).

Rosen, Peter S. Winning the Next War: Innovation and the Modern Military, New York, Cornell University Press, 1991.

Schmoll, Joseph, H., Introduction to Defense Acquisition Management, Defense Systme Management College, Second Edition, DSMC Press, Fort Belvior, Virginia, March 1993.

System Specification For The Enhanced Fiber Optic Guided Missile (EFOG) System, Contract No. DAAH01-95-C-A001, October, 11, 1995.

TRADOC Pamphlet 525-5, Force XXI Operations, A concept for the Evolution of Full-Dimensional Operations for the Strategic Army of the Early Twenty-First Century, U.S. Army Training and Doctrine Command, Fort Monroe, Virginia, August 1, 1994.

TRADOC Pamphlet 525-200-1, Battle Command, U.S. Army Training and Doctrine Command, Fort Monroe, Virginia, December 1, 1994.

TRADOC Pamphlet 525-200-3, Dismounted Battlespace, U.S. Army Training and Doctrine Command, Fort Monroe, Virginia, June 1, 1994.

TRADOC Pamphlet 525-200-4, Mounted Battlespace, U.S. Army Training and Doctrine Command, Fort Monroe, Virginia, June 1, 1994.

TRADOC Pamphlet 525-200-5, Depth and Simultaneous Attack, U.S. Army Training and Doctrine Command, Fort Monroe, Virginia, June 1, 1994.

Unauthored Report, Non Line Of Sight - Combined Arms (NLOS-CA)

United States General Accounting Office, GAO NSIAD-95-56, Bottom-Up Review Analysis of Key DoD Assumptions, Report from the Comptroller General of the United States, January, 1995.

U.S. Army Development of A fiber Optic Guided Missile System, Non-line of Sight-Combined Arms, Unauthored Report from the EFOG-M Program Office, February 5, 1993.

Virtual Prototype Experiment (VPS) Plan for the Rapid Force Projection Initiative/Enhanced Fiber Optic Guided Missile ((RFPI/EFOG-M) Advanced Concept Technology Demonstration (ACTD) Program, Non-line of Sight-Combined Arms Project Management Office, Redstone Arsenal, March 18, 1995.

Willis, Grant, Another 20,000, Army Times Magazine, No. 34, March 18, 1996.

INITIAL DISTRIBUTION LIST

		No. Copies
1.	Defense Technical Information Center 8725 John J. Kingman Road, STE 0944 Fort Belvoir, VA 22060-6218	2
2.	Dudley Knox Library Naval Postgraduate School 411 Dyer Road Monterey, CA 93943-5101	2
3.	Defense Logistics Studies Information Exchange U.S. Army Logistics Management Center Fort Lee, VA 23801-6403	1
4.	Acquisition Library (Code 36) Department of Systems Management Naval Postgraduate School Monterey, CA 93943-5103	1
5.	OASA (RDA) ATTN: SARD-ZAC 103 Army Pentagon Washington DC 20310	1
6.	Professor David V. Lamm, (Code SM/Lt) Department of Systems Management Naval Postgraduate School Monterey, CA 93943-5103	2
7.	LTC John Dillard (Code SM/Dj) Naval Postgraduate School Monterey, CA 93943-5103	1
8.	Dr. Orin E. Marvel (Code C3) Naval Postgraduate School Monterey, CA 93943	1
9.	MAJ Douglas A. Tamilio 21 Hillside Ave Beverly, MA 01915	2