MILITARY AIR CARGO CONTAINERIZATION

GRADUATE RESEARCH PAPER

Joseph W. Mancy, Major, USAF

AFIT/GMO/LAL/96J-4

DEPARTMENT OF THE AIR FORCE
AIR UNIVERSITY
AIR FORCE INSTITUTE OF TECHNOLOGY

Wright-Patterson Air Force Base, Ohio

DISTRIBUTION STATEMENT A
Approved for public release;
Distribution Unlimited

DTIC QUALITY INSPECTED 1

AFIT/GMO/LAL/96J-4

MILITARY AIR CARGO CONTAINERIZATION

GRADUATE RESEARCH PAPER

Joseph W. Mancy, Major, USAF

AFIT/GMO/LAL/96J-4

19960617 134

Approved for public release; distribution unlimited

The views expressed in this graduate research paper are those of the author and do not reflect the official policy or position of the Department of Defense or the U.S. Government.

AFIT/GMO/LAL/96J-4

MILITARY AIR CARGO CONTAINERIZATION

GRADUATE RESEARCH PAPER

Presented to the Faculty of the Graduate School of

Logistics and Acquisition Management

of the Air Force Institute of Technology

Air University

in Partial Fulfillment of the Requirements for the

Degree of Master of Art in Mobility

Joseph W. Mancy, B.S., M.S.

Major, USAF

May 1996

Approved for public release; distribution unlimited

Acknowledgments

The Advanced Studies in Air Mobility program would not have been possible without the vision, dedication, and support of the Air Mobility Warfare Center staff and Air Force Institute of Technology faculty. This was a bold new program requiring interim revisions and innovative solutions. Despite the obstacles, the staff and faculty embraced this new program with a determined zeal to see the students and program succeed. They attained their goal by sending ten students forward with the best possible education and the shared memories of a common journey to last a lifetime.

I would like to thank my advisor, Dr. William Cunningham, and Dr. David K. Vaughan for their support and guidance on this paper.

Finally, my wife Veronica is, and will continue to be, a pillar of support. She has yet to receive a medal, ribbon, or citation for her sacrifice. She prefers to stand quietly behind me with a smile and encouragement knowing her medal is in my heart.

Joseph W. Mancy

Table of Contents

Page

Acknowledgments ii

List of Figures v

Abstract vi

I. Introduction 1

General Issue 1
Importance of Research 4
Problem Statement 6
Research Objectives 6
Research Questions 7
Graduate Research Paper Overview 7

II. Literature Review 8

Introduction 8
Intermodalism 8
Containerization 11
Air Containerization 13
Military Air Containerization 15

III. Discussion Analysis 18

Introduction 18
Benefits 18
Reduced Damage 19
Reduced Pilferage 19
Reduced Handling 20
Efficient Use of Space 22
Cargo Tracking 23
Truck-Rail Transshipment Compatibility 24
Specialized Cargo 24
Preclearance and Preweighing 24
Reduced Documentation 25
Faster Cargo Movement 26
Customer Service 26

Page

Feasibility 27
Availability 28
Compatibility 28
Transportability 30
Interoperability 30
Reliability 31
Wartime Usage Rates 31
Ability to Manufacture 31
Safety 32
Human Factors 32
Supportability 32
Logistics 32
Training 33
Constraints 34
Container Tare Weight 34
Interoperability 35
Backhaul 35
Expense 36
Damage 36
Cargo Fit 36

IV. Recommendations and Conclusion 38
Overview 38
Review of Questions 38
Future Plans 39
Research 40
Modeling 40
Testing 40
Implementation 41
Conclusion 41

Bibliography 43

Vita 46

List of Figures

Figure Page

1. CONEX Container 2

2. Modular Container (MODCON) 3

3. Overview of Containerization 8

4. 463 L Pallet 19

5. Air Cargo Flow with Pallets and Containers 21

6. Refrigerated Container 25

7. ISU-90 Intermodal Container 29

8. ISU-70 Intermodal Container 29

AFIT/GMO/LAL/96J-4

Abstract

The transportation industry has seen the proven benefits of cargo containerization in other modes of transportation. The civilian air sector has gone to containerization. Unlike the civilian counterparts, the Air Force did not make the transition to containers, even though containers have proven themselves to be more economical and efficient in both the surface transportation and civilian air cargo transportation industries. Limited military studies validate the improved efficiency of air cargo containerization, but obstacles remain. This study addresses the possible use of air intermodal containers to replace the current 463L pallet system. The air intermodal container is examined based on the benefits, feasibility, and constraints associated with its use. The Department of Defense must continue to examine the transportation process. Implementing an air cargo containerization program without investigating collateral effects on other transportation systems may suboptimize the overall system.

MILITARY AIR CARGO CONTAINERIZATION

I. Introduction

General Issue

The surface transportation industry has made great strides in the advancement of intermodalism to survive within a competitive global transportation environment. Containerization is a precursor to effective intermodal transportation. "The great enabler of this boom is the container—the ubiquitous steel box that permits increasing amounts of global cargo without having to be unpacked en route" (Miles, 1995: 24). Gerhardt Muller defines containerization as general or specialized cargo placed in a container resulting in efficient and economical shipment through various modes (Muller, 1989: 204). Containerization improves the efficiency of interchange among various transportation modes and reduces the potential for damage and theft due to reduced intransit handling (Coyle and others, 1994: 264). Advances in multimodal containers allow shippers to easily transfer cargo from train to ship to truck or to aircraft without breaking down the cargo, storing it, and rebuilding it. Containerization offers shippers flexibility, cargo protection, better in-transit visibility, and cost savings.

Military air intermodal containerization has yet to progress as it has in the surface transportation industry or as it has in civilian air cargo transportation. To realize the

benefits and efficiencies of intermodalism in military airlift, the Air Force must develop and use standardized intermodal containers.

One of the first military uses of air cargo intermodal containerization came during the Vietnam War. The Army CONEX system was developed in the late 1950s and fielded in the 1960s. It offered an improved method of carrying and sheltering parts. The Air Force and Army used nearly 150,000 CONEX containers during the Vietnam War (Berg, 1992: 36). Today, many CONEX containers are used as storage shelters (see Figure 1).

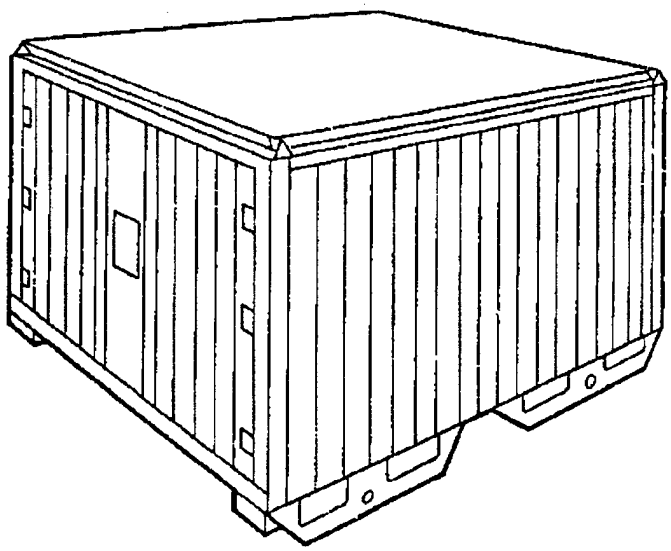

Figure 1. CONEX Container (Weingarten, 1972: 5).

One demonstration between surface and air intermodal capability using existing 20-foot International Standards Organization (ISO) containers was "Project INTACT" (Intermodal Air Cargo Test), conducted in 1975. This test was a combined effort involving the United States Air Force, the Department of Transportation, Lockheed-Georgia, and the shipping industry. A C-5 Galaxy transport loaded with 20-foot ISO

containers flew from Oakland, California, to Nashville, Tennessee. The test results demonstrated the inherent efficiencies of moving cargo using containers, and proved intermodal heavy cargo airlift was economically feasible. The test also concluded that even greater efficiencies would result with a greater distance traveled (Cavin, 1993: 16).

A prototype intermodal modular container (MODCON) was developed and tested in 1973. The MODCON is a true intermodal container compatible with current Air Force airlift aircraft and material handling equipment. The dimensions of the MODCON are 48"H x 48"W x 40"L. The MODCON can be combined and attached in various configurations to yield an assortment of different dimensions including the standard commercial 8'W x 8'H x 20'L container (20-foot ISO container) as shown in Figure 2. These containers can be separated and disassembled for storage and shipping.

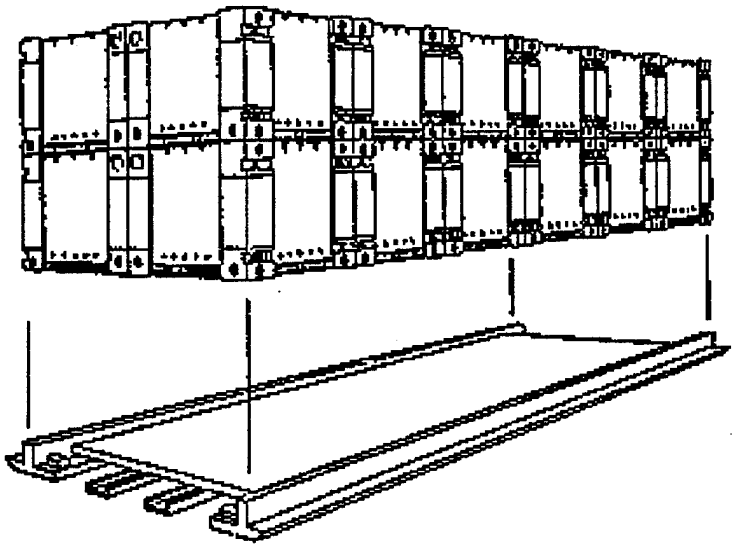

Figure 2. Modular Container (MODCON) (Kelley, 1974: 3).

MODCON test findings concluded that the modules were easily damaged, lacked rigidity, and possessed a tare weight as high as 50 percent of the total weight shipped. The test also concluded that continued use beyond the initial testing would cause deterioration of the 463L material handling equipment (MHE) and aircraft roller systems. Based on the test results, the Department of Defense did not support the development and implementation of the MODCON (Kelley, 1974: 2-10).

In 1995, the US Army completed a Joint Container Exercise Program, in which a Fort Lewis Signal Battalion's equipment was containerized and shipped to Korea. The results of this exercise demonstrated the tremendous increase in efficiency containerization offers the Department of Defense. To date, there is no known exercise or plan to test the feasibility of containerization for air cargo deployments.

Importance of Research

General Fogleman, USAF Chief of Staff, stated, "General Erwin Rommel said that the first condition for armies to endure the strain of battle is to have ample stocks of weapons, ammunition, and fuel. Battles are decided by quartermasters, for even brave soldiers can do nothing without weapons" (Fogleman, 1994, 75). The Department of Defense would gain great efficiencies in cargo movement by revising the transportation structure from source to final user. When viewing the overall logistical pipeline, the rapid movement of air cargo can provide savings over the cost of keeping a large inventory. Aside from inventory savings, containerization has other benefits. Dr. M. A. Khan, Professor of Marketing at James Madison University, says containerization offers eight advantages over conventional air freight:

1. door-to-door service
2. truck chassis compatibility and transport operator familiarity
3. container compatibility with handling equipment and procedures
4. container adaptability to demands of cargo
5. lower cross-handling costs
6. improved security provided by locked container
7. customs clearance in advance of international travel
8. simplified cargo rate structure (Khan and Neuhauer, 1979: 13)

In addition to the source-to-user concept, air cargo containerization offers the military higher input-output efficiency, quicker aircraft turnaround, and more efficient aircraft use. Our forces are drawing down from overseas. During the early stages of a conflict, the bulk of our war-fighting forces will come from the United States. This places a premium on our ability to rapidly deploy our forces to ward off an attack. Manpower-intensive preparation is required to move an Army unit to the battlefield. The shipping preparation may require strapping equipment down on a pallet, or disassembling a complicated vehicle. Containerization allows much of the shipping preparation to occur in advance, allowing more efficient manpower use while fighting the enemy (Patterson, 1993: 13).

Despite numerous advantages and increased efficiencies, containerization faces several disadvantages. These disadvantages include the possible lack of materials handling equipment (MHE) compatibility, complications returning empty containers, and cargo fit problems since all cargo can not be containerized. Finally, air containerization must

overcome the container tare weight problem while balancing the container strength versus tare weight compromise.

Our national military strategy of global force projection through force closure depends on the readiness and ability of the airline industry and Air Mobility Command. An ideal system would incorporate the interoperability between the civilian and military air cargo carriers.

Problem Statement

This paper will examine the prospects of intermodal air cargo container use by the military to increase the efficiency of cargo movement. The Air Force has been using 463L pallets since the system was developed in 1957. The 463L pallet provides the Air Force with a reasonably efficient method of unitizing air cargo and moving the cargo between aerial ports. The military needs a system that can move cargo from the original source to the final user—the door-to-door concept. During the 1970s, civilian air cargo moved towards a fully intermodal transportation system using standardized containers. Unlike the civilian counterparts, the Air Force did not make the transition to containers, even though containers have proven themselves to be more economical and efficient in both the surface transportation and civilian air cargo transportation industries.

Research Objectives

The research will examine the benefits, feasibility, and constraints associated with implementing a Department of Defense intermodal air cargo containerization program.

The study will explore the benefits of using existing air cargo containers and their associated limitations.

Research Questions

1. What is the compatibility of existing ground handling equipment with air cargo containers?
2. Do containers fit the civilian and military aircraft flown in peacetime and during war?
3. Does container tare weight prevent the efficient use of air containers?
4. What is the best way to return empty containers to the user?
5. How is cargo flow through aerial ports affected through container use?

Graduate Research Paper Overview

This paper will examine the prospects of intermodal air cargo container use by the military to increase the efficiency of cargo movement. It will look at the cost, the benefit, the feasibility, and the constraints associated with implementing an intermodal air cargo container system.

II. Literature Review

Introduction

Military air cargo containerization can be thought of as a subset of intermodalism, containerization, and air containerization as shown in Figure 3. Intermodalism is seamless transportation using various modes of transportation to maximize the benefits of each mode. Intermodalism relies heavily on containerization to facilitate the process. Containerization allows the intermodal process to flow easily through critical transshipment points without breaking down, reconfiguring, or repackaging the cargo. Air cargo containerization is used effectively in the civilian air cargo sector, but the military has not adopted containerization as the primary method of moving cargo.

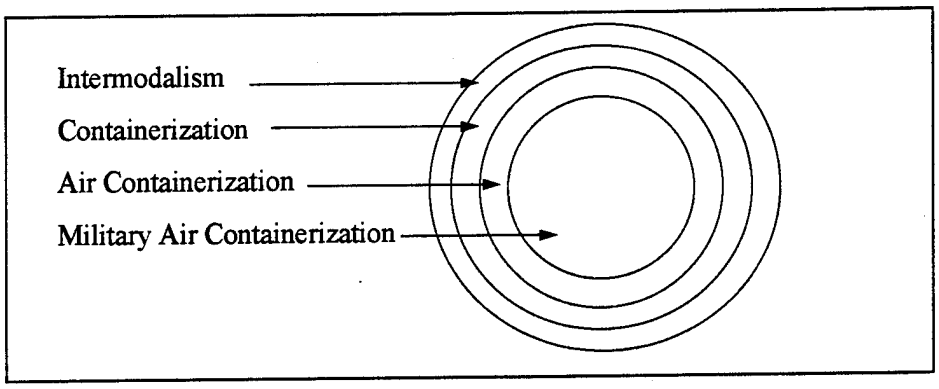

Figure 3. Overview of Containerization

Intermodalism

Intermodal transportation has existed for centuries. It occurs any time we change the mode of transportation we are using allowing us to ship goods faster, cheaper, and

more efficiently. When we ship using any combination of rail, air, truck, or barge, we are using intermodal transportation. The Department of Transportation (DOT) defines intermodalism as connections, choice, coordination, and cooperation. It is the convenient, rapid, efficient, and safe transfer of goods from one mode to another, including source-to-user transportation, during a single journey while maintaining the highest quality of transportation (Martinez, 1992: 9). The cargo is shipped from one mode to the next using the same container without repackaging.

Developments in containerization and cargo intransit visibility have made the intermodal transportation industry rapidly grow during the past fifteen years. Despite its growth, intermodalism does not have the same meaning for all users.

Intermodalism means connections. To be successful, intermodalism requires an intermodal infrastructure. Within this infrastructure are interchange points. Interchange points are the means by which the cargo is transferred from one mode of transportation to another. Successful intermodalism requires interchange points at seaports, airports, railroad sidings, and pipeline terminals.

Intermodalism offers the shipper choice. It makes the transportation industry more competitive. For example, intermodal rail-to-truck can compete with truck-only shipping or rail-only transportation. It gives the shipper greater flexibility to choose between competitive modes of transportation. Shippers can choose the mode or combination of modes that most closely meet their needs with respect to shipping time, location, cost, and customer service.

Intermodalism means coordination and cooperation. In the past, transportation providers viewed themselves as competitors, not partners. Today, transportation organizations must work together to ensure their survival. To compete successfully in a global environment, transportation organizations must realize that improved quality, service, safety, and efficiency are now industry standards.

Intermodalism has existed for centuries. From the first time the Egyptians took cotton from the backs of camels and transferred it to cotton boats to sail down the Nile, transmodal shipping and the earliest forms of intermodalism occurred. During the past forty years, intermodalism has gained prominence in the transportation industry, most notably between rail and truck and rail and ship transportation. In fact, intermodal transportation is one of the fastest-growing trends in transportation. An abundance of literature shows the benefits, effectiveness, and efficiency of intermodal transportation. Yet, the Department of Defense has not taken full advantage of the intermodal trend. General Robert L. Rutherford, CINC USTRANSCOM, states that "we in the military need to do a better job of bringing the intermodal capabilities of our global transportation companies to bear on the time-sensitive Department of Defense shipping requirements" (Rutherford, 1995: 14).

Containerization and intransit visibility are essential elements of intermodalism. The Gulf War was the first military operation to rely heavily on intermodal containers. Over 40,000 containers were shipped to the Gulf. Of the 40,000 containers, 28,000 (seventy percent) had to be opened at the seaports and inspected to determine the container contents. Not knowing what had arrived at the seaports resulted in additional

shipments of the same cargo. Containerization and intransit visibility have become as important as the movement of cargo itself (Bishop, 1993: 2-6).

Tracking shipments is no longer the nightmare it once was. Hand-held scanners, radio frequency tagging, satellite tracking, and electronic data interchange (EDI) are examples of information technology commonly used today. These innovations lessen the likelihood that shipments will be lost in the shuffle between modes and decrease the chance that containers will arrive at the destination with unknown contents.

Containerization

Since rail, truck, and ship intermodal travel have dominated the intermodal revolution, most of the literature on containerization is found on surface containerization.

Containerization started in 1957 when the ship, Gateway City, crossed the Atlantic fully loaded with containerized cargo. In 1958, Matson Steamship Lines discovered that 43 percent of its ocean freight costs were associated with loading and discharging wages paid to longshoremen. To increase productivity and lower costs, Matson Steamship Lines switched to containerized cargo. The increased capital costs for new ships, equipment, and loaders doubled their overall investment. However, time in port per ship decreased considerably from an average of seven days to just twenty-two hours. Other indirect cost savings included a 50 percent decrease in breakage, and a 10 to 15 percent decrease in pilferage (Weingarten, 1972: 4-6).

One-half of all global trade now travel via container. Fueled by the 1984 Shipping Act, which deregulated sea and land transport, the container revolution has spread across much of the industrialized world (Miles, 1995: 24).

Since containerization is responsible for launching much of the intermodal transportation phenomenon, there is a tendency to use both terms, containerization and intermodalism, as having the same meaning. However, they have separate meanings. Bulk and neo-bulk cargo are transferred between modes without containers. Bulk cargo involves transporting products like coal, petroleum, and grains. Neo-bulk cargo, is a more recent term used to describe shipments of bulk and other types of homogenous cargo such as lumber and oil in one vehicle. Cargo separation is maintained during loading, transportation and unloading (Muller, 1989: 2).

The Department of Defense has recently put containerization to the test. Two US Flag containerships were booked during Operation TEAM SPIRIT 93 to carry the 29th Signal Battalion of Ft Lewis, Washington, to Camp Humphreys, Korea, and back in a fully containerized configuration. The results of containerizing an Army battalion for overseas shipment were staggering. Using 296 containers, the 29th Signal Battalion arrived in Korea six days ahead of schedule (Adams, 1995: 1).

For example, assume an Army division needs to move 7200 nautical miles from the continental United States for battle. In the first month, the United States Transportation Command (USTRANSCOM) would need to move approximately 15,000 soldiers and 90,000 tons of cargo. For sustainment purposes, USTRANSCOM would need to move 37,000 tons each month thereafter. Approximately 70 percent of the cargo is containerizable, 25 percent can be driven on-board a ship, and the remaining 5 percent is non-containerizable. Under nominal conditions, it would require 1.5 days to load and unload each ship and 11.5 days sailing time for a total of 14.5 days (Weingarten, 1972, 12-

13). However, this time does not include time to prepare the cargo for shipping, transportation to the port, and transportation to the user once it arrives in port. Unless there is a prepositioned ship afloat near the theater of operations, the required transportation would fall upon airlift to fill the critical two-week gap before seaborne cargo could arrive. The ability to load containers in advance of the need to ship the containers is one of the quintessential benefits that containerization offers the military.

Air Containerization

Most of the literature on air containerization is found in conjunction with the sea or truck modes of travel. Sea-air intermodal travel has received growing attention from transportation experts during the past twenty years.

Various international shippers have taken advantage of the benefits of shipping cargo using air transportation or a combination of sea and air transportation. Sea transportation, which shippers generally reserve for bulk goods, is slow and inexpensive. Air transportation, where shippers transport small high value items, is more rapid but the shippers must pay a premium for the shorter delivery time. Now, shippers have a middle ground where they can send their products to market faster than using traditional over-water shipping and less expensively than using air freight transportation (Raguraman and Chan, 1995, 379-380).

Singapore, Dubai, and Seattle are the top three sea-air intermodal hubs. Using the sea-air mode of transportation, shippers can reduce the transit time from Japan to Europe from 35 to 14 days at half the cost of using air freight alone (Delia-Loyle, 1992, 17). "Many of the subsidiary costs are slashed. These include warehousing fees, handling

charges, wharfage and cartage costs, insurance, compensation costs for damaged or pilfered goods and packing costs" (Asian Business, 1988, 57). As more companies move toward smaller inventories that rely on rapid, reliable shipments, the sea-air mode may offer just the right mix to meet their transportation needs.

The success of the air cargo industry, whether using air cargo in its singular form, or using air cargo in conjunction with other modes of transportation, in its intermodal form, could not have been possible without advances in air cargo containerization within the air cargo industry. There is some degree of standardization within the civilian sector with respect to similar fiberglass reinforced plastic containers within cargo aircraft and lower deck containers on passenger aircraft. Currently, the civilian air cargo industry uses the following devices for transporting cargo within their aircraft:

1. Pallets -- flat loading platforms usually made from aluminum and wood designed specifically for different cargo and aircraft. It offers the most flexible method for loading air cargo and it is the current method used by the USAF.
2. Rigid containers -- designed to fit the lower hold of passenger and cargo aircraft; also developed for conventional and wide-body aircraft (some standardization exists within the industry)—not designed for intermodal use. Most of these rigid containers are made from fiberglass or plastic and can not be stacked as can most surface transportation containers.
3. ISO containers -- twenty- and forty-foot containers which are capable of multimodal or intermodal use. These containers may be made from steel or aluminum and have some limited stacking capability.

Military Air Containerization

In 1972, Joseph L. Weingarten wrote a thesis on the impact of intermodal containerization on USAF cargo airlift. His thesis also examined container construction and container use by other modes of transportation. He believed that military cargo containerization would someday play an important role in the future of airlift operations, but container design, as of 1972, had not yet improved to the point where containers could efficiently meet Air Force requirements (Weingarten, 1972: 65).

A thesis written by Russell K. Kelley in 1974 examined the possible benefits of using modular containers (MODCONs) that attach to form large containers of various sizes. The containers were developed to be compatible with current Air Force MHE and aircraft. But, due to aircraft roller and MHE damage from operational tests using the MODCONs, the Department of Defense did not support the development and implementation of MODCONs (Kelley, 1974:2-10).

Michael M. Rice and Dennis E. Welch wrote a thesis in 1975 regarding the potential use of an 8 x 8 x 5 foot (QUADCON) intermodal container for use with routine military air cargo. They concluded that despite 98 percent channel cargo compatibility with their QUADCON containers, an attempt to containerize all traffic within QUADCON containers would result in low average utilization rates and a subsequent increase in the number of containers required. Rice and Welch believed a mix of pallets and QUADCONs offered the Department of Defense the ideal solution. Furthermore, they concluded that the Air Force logistics infrastructure could not support the QUADCON container (Rice and Welch, 1975: 102-104).

A research report written by Edward D. Bishop in 1993 stated that the containerization of cargo and the intrasit visibility of the cargo are as important as the movement of the cargo itself. He looked at the history of containerization and lessons learned from the Gulf War. His focus, however, was on the intransit visibility side of the equation and he discussed predominantly surface transportation. He recommended a Department of Defense-wide intransit visibility system, new cargo documentation, and the acquisition of container handling equipment (Bishop, 1993: 2-6).

Finally, a 1993 thesis written by Glynn W. Cavin, Jr., described using 20-foot ISO containers during project INTACT (Intermodal Air Cargo Test). This test conclusively proved the inherent efficiencies shippers gained by using containers to move cargo. The test also demonstrated the shortfalls of using containers. The most noticeable short fall was the high tare weight penalty incurred from using the steel 20-foot ISO containers for air cargo movement (Cavin, 1993:16).

In summary, an abundance of literature is available on the subject of intermodalism. In the area of containerization, the literature focuses is on surface transportation containerization. Intermodalism and containerization have flourished in the surface transportation industry during the past two decades. An examination of air cargo containerization reveals that the spread of containerization has made significant inroads into the commercial air cargo industry. Even though much of the containers are not standardized across the industry, most of the containers are designed for the specific airframe that they support. Today, almost all commercial air cargo transportation uses some sort of fiberglass container. Military air cargo containerization has not similarly

developed. Few studies examine the benefits and costs of using an intermodal air cargo containers. To gain the best understanding of where military air cargo containerization is today, it is important to understand how military air cargo containerization fits into the broader picture of air containerization, containerization, and within the broadest perspective of intermodalism.

III. Discussion Analysis

Introduction

This chapter examines why the Air Force and Department of Defense should develop and acquire standardized intermodal containers for global airlift. This chapter specifically looks at the Air Force's benefits, feasibility, and constraints of implementing a containerization program.

Benefits

The benefits the Department of Defense will derive from adopting a containerization program in lieu of its current 463L pallet system are many. Currently, the USAF has over 180,000 463L pallets in its inventory. The 463L pallet is a 300-pound flat metal structure that, when used in conjunction with plastic wrap and tie-down straps, can be loaded with up to 10,000 pounds of cargo (see Figure 4). The 463L pallet has been the primary method of transporting cargo onboard military aircraft since the early 1960s. Yet, surface transportation and commercial air transportation have embraced the growing trend of using containers in shipping. Using containers is a more efficient method of moving cargo.

Lower costs are a benefit of containerization that are included in a broad spectrum of other benefits. Containerization reduces cost by increasing the efficiency of transportation. Saving dollars and reducing costs are as important to the military as it is to many businesses. With a shrinking defense budget and an Air Force cost allocation system

where each wing or cost center is allocated limited funds to perform its mission, reducing costs is of paramount concern.

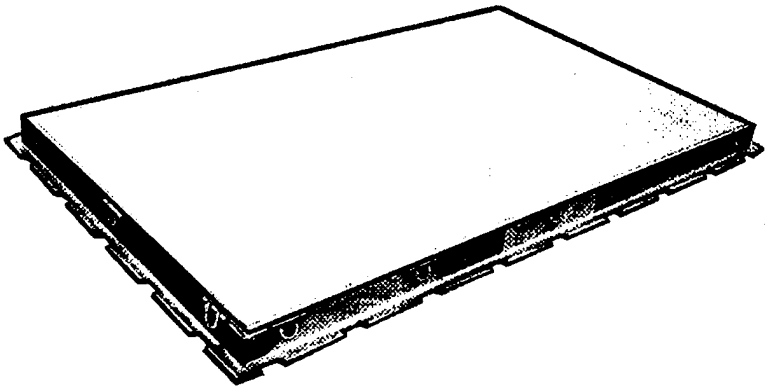

Figure 4. 463 L Pallet (AAR Cadillac Manufacturing, 1995: 47)

Reduced Damage. The second benefit of containerization is reduced damage to the articles being shipped. The container's rigid structure protects the container's contents from MHE damage, vandalism, weather damage, and general movement or shipping damage. Less damage translates into lower insurance costs, less reorders due to damage, and fewer claims against the shipper.

Reduced Pilferage. Containerization offers the Department of Defense the benefit of reducing cargo loss or pilferage. The enclosed container can be locked reducing or preventing theft. In addition, unlike the clear plastic cover of the 463L pallet, an intermodal container hides the contents from the view of the potential thief. Reduced

pilferage rates also lower insurance costs, reorders due to loss, and claims against the shipper.

Reduced Handling. The fourth benefit of containerization is reduced handling. Containerization reduces handling by reducing the number of times the cargo needs to be sorted, broken down, weighed, and repackaged. When cargo arrives in Aerial Ports of Embarkation (APOE), it is typically broken down, sorted, stored, and built up for shipment. Containerization will not eliminate the need to sort and store goods before shipping. Yet, containerization will eliminate the need to breakdown and sort much of the cargo that enters an APOE. The ability to provide shippers (consignors) containers which they pack before the cargo arrives at the APOE, will save time, handling, and costs. Ideally, one container shipped from source-to-user (consignor to consignee) or door-to-door without breakdown is the goal of intermodal containerization.

Palletized cargo must travel through a more labor-intensive and time-consuming circuitous route from its origin to departure aircraft when compared to the streamlined route of containerized cargo. Figure 5 depicts two distinct paths cargo must travel from origin to aircraft for shipment. The left side of Figure 5 shows the current routing that palletized cargo travels. The right side of Figure 5 depicts the ideal routing that containerized cargo could travel.

Currently, when an Army unit decides to ship cargo requiring palletization, customer service personnel first visit the Army unit. At the Army post, customer service

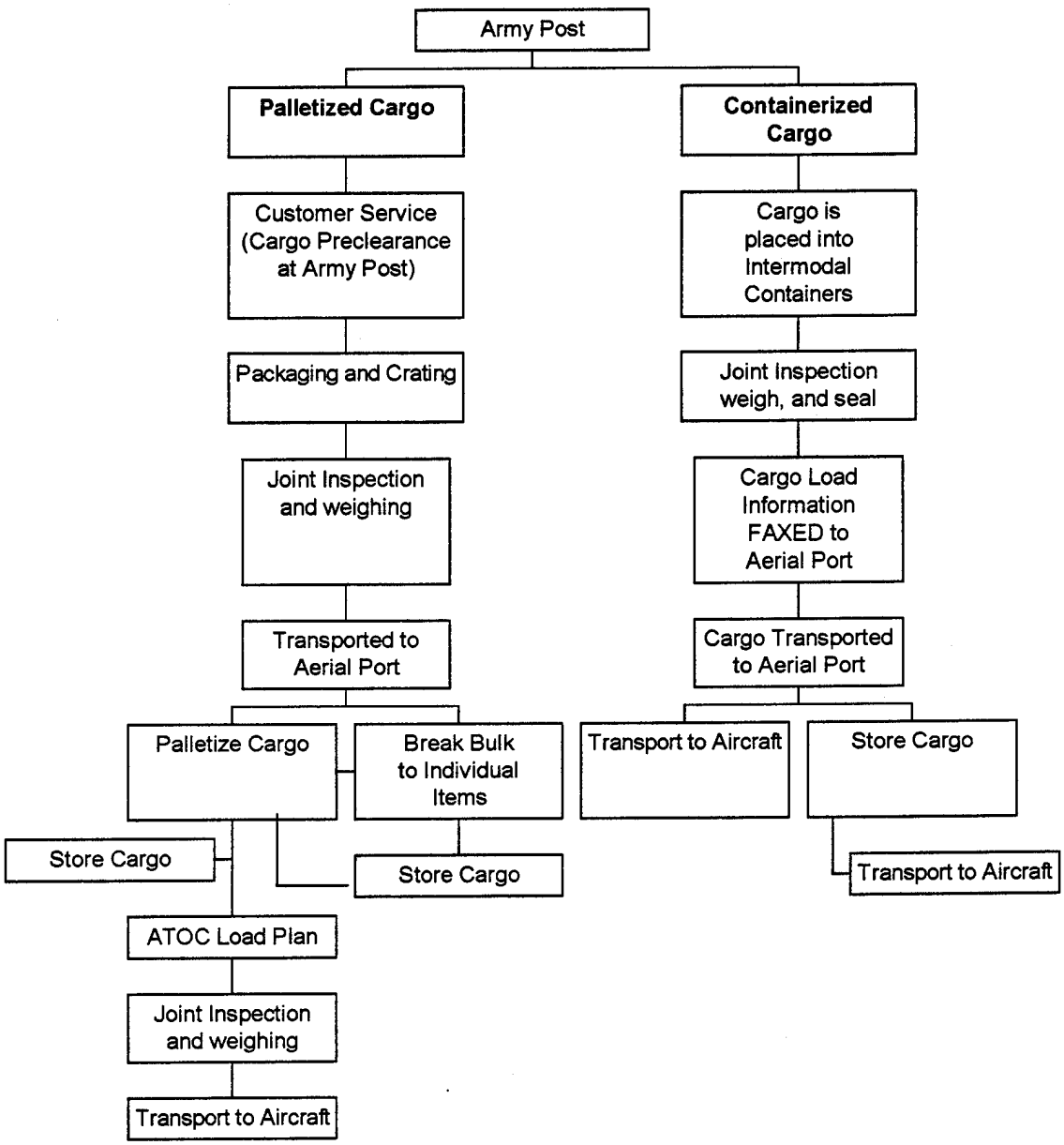

Figure 5. Air Cargo Flow with Pallets and Containers (Diaz, 1996).

personnel determine how much and what type of cargo will be moved and there are any special requirements. Next, the cargo is packaged or crated for transport to the aerial

port. Because a truck is the most likely mode of transportation from the Army post to the aerial port, packers generally use wooden or boxed containers for shipment to the aerial port. After the cargo is packaged, it may be weighed if the Army post owns weight scales. Once packaged, the cargo moves to the aerial port. The aerial port stores, palletizes, or breaks down the cargo for shipment. After the cargo is palletized, it is weighed. Once weighed, the cargo load information is passed to aircraft load planners. The aerial port personnel weigh the cargo again in conjunction with a joint inspection. The sender, commonly the US Army, and the aerial port personnel conduct a joint inspection. Once the cargo has passed the joint inspection, the cargo is ready for air transport.

The right side of Figure 5 contrasts the palletized cargo flow with the streamlined flow associated with containerized cargo. If the Army has the necessary containers for a unit deployment, the cargo can be placed inside the containers at the Army post. The containers can be jointly inspected, weighed, and sealed prior to shipment to the aerial port. The cargo load information can be electronically sent to the aerial port load planners. Intermodal containers fit on the flat-bed trucks and fit inside most airlift aircraft without modification. Once the cargo arrives at the aerial port, the cargo is transported directly to the aircraft or placed in storage until air transportation arrives.

Efficient Use of Space. Containerization benefits the Department of Defense by using space more efficiently onboard cargo aircraft. Containers can be packed in a more efficient and standardized fashion to maximize limited space available onboard an aircraft. Unlike pallets, containers can be fitted with drawers and other internal structures that maximize efficient use of space within the containers. Containers can be custom fitted or

stacked to maximize the use of the internal space within the aircraft. A fully-loaded 463L pallet does not normally exceed a height of nine feet. Multimodal containers could be stacked on top of each other within the cargo compartment of a C-5, C-17, or a 747-400 aircraft.

An example of the increased cargo capacity from containerization occurred during a KC-135 Air National Guard deployment. The Air National Guard purchased ISU-70 intermodal containers and found that container use increased cargo capacity by 30 percent (New Containers Reduce Deployment Time and Effort, 1995: 17).

Cargo Tracking. Another possible benefit containerization offers the shipper is better intransit visibility. Unlike pallets, containers have a hard outer-shell construction where documentation, bar-coded labels, radio frequency tags, or satellite tracking devices can be mounted. Container manufacturing companies can build protective housings for specific tracking devices. The intransit visibility of cargo is of special interest to the Department of Defense. When he was CINC, USTRANSCOM, General Fogleman stated that intransit visibility is one of the most important developments requiring our attention (Fogleman, 1995: 63). Intransit visibility, as previously mentioned, and containerization, are essential elements that have fueled the intermodal explosion. The ability to track cargo may be more important than the shipment of the cargo itself (Bishop, 1993: 2). If duplicate shipments are required for each shipment because neither the shipper, the sender, nor the receiver know where the cargo is located, the transportation system is broken. During the Gulf War, poor container tracking occurred often. Seventy percent of the containers arriving at the ports in Saudi Arabia were opened to determine the container

contents and destination. Tracking cargo became as important as the delivery of cargo (Bishop, 1993: 9).

Truck-Rail Transshipment Compatibility. Airports are rarely the final destination for air cargo. Therefore, the cargo must be transferred from the aircraft to truck, rail, or other mode of transportation where transshipment can occur. Intermodal containers are designed to fit on a flat-bed truck, a rail car, or inside a transport aircraft without unloading or modifying the container. A container can be downloaded directly to a truck for transportation as opposed to breaking down the cargo and loading it from one container to another. Containerized cargo streamlines the cargo flow through the transshipment facility or aerial port. These transfer nodes or transshipment points are critical elements of intermodal transportation. Damage, loss, pilferage, delays, and misrouting of the cargo can easily occur at these transshipment points.

Specialized Cargo. Another benefit of air cargo containerization occurs when the shipper requires unique forms of transportation. If the nature of the cargo requires special care as would ammunition, explosives, or perishable products, containers become the preferred method of transporting materiel. Shippers use refrigerated containers or dehumidified containers to prevent the loss of perishable products (see Figure 6). Containers can also be designed with special features for safely transporting hazardous or fragile materiel, giving containers a unique quality not found with pallets.

Preclearance and Preweighing. Containerization offers the shipper another distinct advantage over a palletized cargo system. It is possible to preclear customs from the shipper's original location, circumventing a potential bottleneck downstream at the APOE

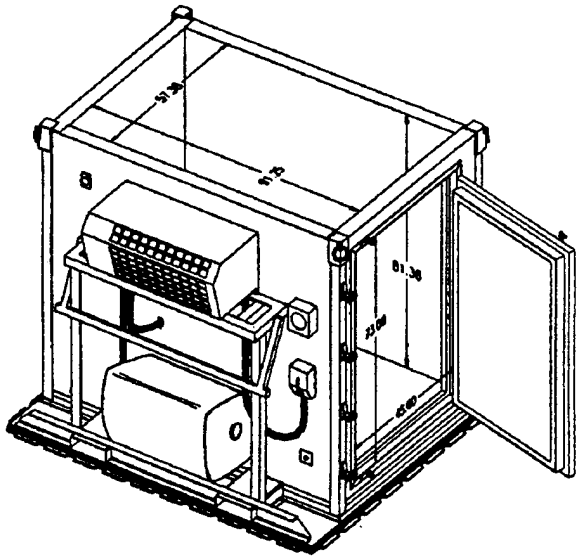

Figure 6. Refrigerated Container (AAR Cadillac Manufacturing, 1995: 13)

or APOD. An Army unit preparing for mobilization supplied with sufficient multimodal containers can preclear customs at the loading location on post. This is possible due to the ability to lock and seal containers. Containers can be made ready for international travel before they leave the Army post.

In a similar fashion to preclearing customs, containers can be preweighed at their point of origin prior to shipping. After the container is sealed, the containers can be weighed and the weights and dimensions forwarded to the air base for load planning. The planning information arrives in advance of the cargo saving time and averting a potential APOE bottleneck. A step as simple as weighing cargo in advance potentially saves tremendous time when an Army division deploys.

Reduced Documentation. Containers unitize cargo allowing cargo to travel as one unit. The transportation system tracks a container, not its contents (Rice and Welch,

1975: 5). Tracking fewer items reduces the amount of required documentation. Unlike pallets, containers reduce documentation through less handling.

Faster Cargo Movement. In conjunction with reduced handling benefits of containerization is the added benefit of increased speed. Speed of cargo movement may come from more efficient transshipment, bypassing breakbulk operations within aerial ports, or less turnaround time from faster aircraft off- and on-loads. During the 1983 US invasion of Grenada, C-141 aircraft were able to land and offload containerized cargo so rapidly that they exceeded the airport's ability to move the cargo off of the airport ramp (Sherwood, 1996). This demonstrates the potential speed of containerized cargo movement. Airlift is used typically when other means of transportation are too slow or unavailable. Because airlift is expensive, shippers buy airlift to buy time. Where rapid delivery may save jobs, businesses, or dollars in the civilian world, the speed of getting needed equipment directly to the battlefield translates into saved lives in the military.

In 1995, the Pennsylvania Air National Guard deployed the 171st KC-135 Air Refueling Wing using AAR Cadillac Manufacturing ISU-70 containers. The containers were used to transport the wing's equipment, spare parts, and tools used during the deployment. According to Jeff Hedges, Traffic Manager, "With a pallet system, it can takes us eight to fourteen hours to prepare to deploy. With containers, we were able to cut the time down to two hours or less" (New Containers Reduce Deployment Time and Effort, 1995: 17).

Customer Service. One of the most important reasons that containerization offers the Defense Transportation System more benefits than does the current 463L pallet system

is customer satisfaction. Even before the Air Force gained a heightened sense of quality awareness and customer focus, it made good sense to transport cargo rapidly, efficiently, to the right person, at the right place, and in good condition. Air Force customers are buying time by using airlift. If time were not a premium to the customer, there would be many less expensive ways to deliver cargo. If the cargo arrives late, in the wrong place, or in an unusable condition, there are no benefits of using US military air transportation. The transportation industry is a service industry, and customers are the reason why service organizations exist. Any time transportation providers improve quality, service, safety, and efficiency, they improve overall customer satisfaction and service. The Defense Transportation System must strive to meet the growing customer needs better.

Feasibility

To value the merits of adopting standardized intermodal container, the USAF must examine the feasibility of the proposal. After the Department of Defense conducts a mission needs analysis for a new acquisitions, the Department of Defense the acquisition process. During this process, the Department of Defense considers the following 13 criteria in determining whether a new acquisition is suitable for acquisition: availability, compatibility, transportability, interoperability, reliability, wartime usage rates, ability to manufacture, safety, human factors, manpower, supportability, logistics, and training (Nelson, 1992: 33). This paper will determine the feasibility of developing and acquiring standardized intermodal containers for global airlift from the perspective of the previously described 13 acquisition criteria.

Availability. AAR Cadillac Manufacturing, the current manufacturer of the Air Force's 463L pallet, manufactures an assortment of different intermodal containers. One of the most likely substitutes for the 463L pallet manufactured by AAR Cadillac Manufacturing is the ISU-90 (see Figure 7). The ISU-90 container has the same basic footprint as the 463L pallet. It incorporates the pallet as its floor structure. The ISU-90 container provides weather-resistant storage and transport of up to 10,000 pounds of equipment and supplies. Its dimensions are 108" x 88" x 90" and may be stacked two containers high. It may be equipped with adjustable shelves and dividers. The ISU-90 is hazardous cargo certified. It may be locked and sealed for high value items. It is forkliftable using a standard 10,000-pound forklift with 72" tines (AAR Cadillac Manufacturing, 1995: 2). Each of the ISU-90 containers has a maximum tare weight of 1760 pounds; the cost is approximately $6500 each (Sherwood, 1996).

Mobilized Systems also manufactures a compatible intermodal container. However, it has had limited manufacturing and production success (Brown, 1996).

Compatibility. AAR Cadillac Manufacturing's ISU-90 is compatible with the primary Air Mobility Command transport aircraft. It may be double-stacked on the C-5 and C-17, but may not be double-stacked in the C-141, or C-130 transport aircraft (Hershman, 1996). The ISU-90 is not compatible with the KC-10, KC-135, DC-8 or DC-9 aircraft. Based on the dimensions of the container, the ISU-70 must be used for the latter aircraft (see Figure 8). The ISU-70 is 20 inches shorter than the ISU-90 and has a cut-away section on the top surface. The ISU-70 may be double-stacked inside certain

aircraft, and may be double-stacked in storage. With the above exceptions, the ISU-70 has the same capabilities as the ISU-90 container.

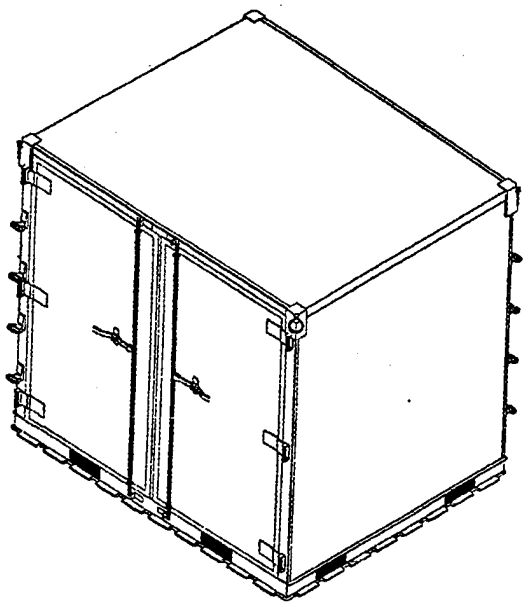

Figure 7. ISU-90 Intermodal Container (AAR Cadillac Manufacturing, 1995: 3).

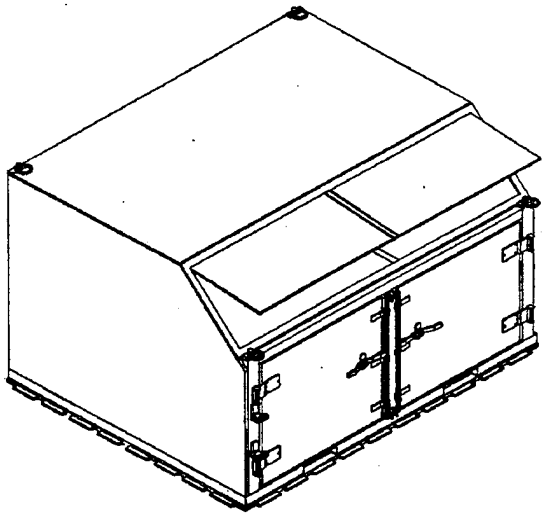

Figure 8. ISU-70 Intermodal Container (AAR Cadillac Manufacturing, 1995: 7).

Transportability. The ISU-90 and ISU-70 intermodal containers are fully transportable on flat-bed trucks or on the back of a 2 $^1/_2$- or 5-ton Army truck. In addition, four ISU-90 or ISU-70 intermodal containers can fit inside a standard 8' x 9' x 40' ISO container. This is a standard surface intermodal container commonly found on container ships, railroad cars (single or doublestacked), barges, and truck transportation. The ISU-90 and ISU-70 may be transported on a sling by the US Army, and Marine Corps CH-46 Chinook helicopters (AAR Cadillac Manufacturing, 1995: 1). Intermodal containers manufactured by Mobilized Systems do not have helicopter sling capability.

Interoperability. The ISU-90 container can be placed in 11 of the 13 pallet positions on the C-141B transport. The C-141 can transport 13 containers if smaller containers are used in pallet position one and thirteen. However, if an ISU-90 were used in the first pallet position, it would block the flight crew's access to the avionics underdeck, latrine, and crew entrance door. The last pallet position on the C-141B is the ramp and has a height limitation prohibiting the ISU-90's placement there. The ramp raises slightly when the aft doors are closed and becomes part of the pressure door assembly. This reduces the overhead clearance for the last pallet position, limiting the C-141B's ISU-90 container-carrying ability to 11 containers. However, smaller ISU-60 containers can be used in the first and last pallet positions (Sherwood, 1995).

The C-130 transport requires an ISU-90-I container instead of the standard ISU-90 container to fit in the wheel well section of the cargo compartment. The wheel well area of the C-130 transport cargo compartment is narrower than the rest of the fuselage.

For a crew member to pass from the front of the cargo compartment to the aft end of the cargo compartment, the narrower ISU-90-I container must be used (Sherwood, 1996).

The ISU-90 is compatible with many civilian and Civil Reserve Air fleet aircraft. The ISU-70 is compatible with the KC-10, DC-10, KC-135, B707, DC-8, and DC-9 airframes. However, it does not have the direct floor lock-down capability as found on USAF organic airlift aircraft. The ISU-90 has limited compatibility with the above aircraft and requires chain tie downs to secure the container to the floor of these aircraft.

Reliability. AAR Cadillac Manufacturing has produced the ISU-90 for over 15 years. The Department of Defense has purchased approximately 40,000 ISU-90-type containers. The Department of Defense has made no complaints of poor durability or reliability to date. The sides and top of the containers are of fiberglass reinforced plastic and the container floors are bonded aluminum over balsa wood construction (Brown, 1996).

Wartime Usage Rates. During Operation Desert Shield and Desert Storm, AAR Cadillac Manufacturing was able to surge production of the intermodal containers from 3,000 containers per year to 3,000 containers per month.

Ability to Manufacture. AAR Cadillac Manufacturing and Mobilized Systems are two companies currently able to produce intermodal containers compatible with the floor lock and rail system on the C-141, C-5, C-17, and C-130 transport aircraft. Currently, the Defense Logistics Agency at Richmond, Virginia, has an open requirements contract valid through the end of fiscal year 1997 with AAR Cadillac Manufacturing. This contract allows the Department of Defense to purchase these containers as needed. Mobilized

Systems has a contract to make a container similar to the ISU-90 with Warner Robins AFB, but the contract is one year behind schedule with production delays (Brown, 1996).

Safety. Double-stacked containers may pose an increased safety risk to loaders and material handlers. However, there appears to be no significant difference in the safety level associated with pallets and containers.

Human Factors. To capitalize on potential increased efficiencies, the change from a 463L pallet system an intermodal containers would require a significant process change. The change requires aerial port personnel to make a paradigm shift. They must believe in the ability to allow the cargo to be correctly packed, inspected, and weighed the first time and only once. Today, aerial port personnel require the Army to have the cargo "shipment ready" for transportation before the customer service inspectors arrive. Yet, the aerial port personnel do not trust the Army to package the cargo correctly, and aircraft loadmasters continually double check the aerial port personnel's weight and load calculations (Diaz, 1996). This is why a sealed container system requires trusting the workers upstream in the transportation pipeline to perform their job accurately. In addition to trust, the leadership must hold the workers accountable.

Supportability. Current USAF MHE, including the 10K, 25K forklifts, and 25K, 40K, 60K loaders, and the wide-body elevator loader support the ISU-90-type container. The ISU-70 and ISU-90 have the same dimensions, floor structure, and rail-lock capability as the 463L pallet.

Logistics. Intermodal containers pose two logistical nightmares—storage and the backhaul. There are currently 180,000 463L pallets owned by the USAF located

throughout the world. In 1994, there were so many 463L pallets stacked at McChord AFB, WA, next to the runway, that the metal was causing inaccuracies in the airport's navigation signals. Empty 463L pallets are stacked dozens high without taking up appreciable space. Each 463L pallet is $2^1/_4$ inches high. Stacking 52 pallets, the same number of pallet positions available on four C-141 aircraft, would reach 9 feet 9 inches in height. Fifty-two stacked pallets occupy approximately 400 cubic feet, the space of one ISU-90 container. On the other hand, 52 ISU-90 containers would take up 20,800 cubic feet of storage space when not being used.

The CONEX container, widely used during the Vietnam War, became the favorite paint or ammunition storage shed when not used for transporting supplies. Tracking used containers and returning them from the user to the APOE or APOD will remain a logistical concern for intermodal containerization.

Training. Training on container weighing, packaging, and inspecting it right the first time is a process problem that the Department of Defense can overcome. If the original container packers are held accountable for what and how they pack, and accurate weights and contents are labeled on the containers, it is possible through training for the process to work right the first time. The key is accountability. If load planners and container packers are made aware that inaccurate weights or unauthorized hazardous cargo can destroy an aircraft and kill a crew, the gravity and importance of the task will lead to better accuracy and accountability.

Constraints

In addition to analyzing the Air Force and Department of Defense's benefits and feasibility of developing and acquiring standardized intermodal containers for global airlift, this paper examines the constraints associated with their use. These constraints include container tare weight, interoperability, backhaul, expense, and damage.

Container Tare Weight. Perhaps the most serious drawback to the use of containers over pallets is the weight penalty of container use. Container tare weight increases fuel required by three percent of the added weight, lowers the aircraft cruise ceiling, shortens the aircraft range, increases the aircraft takeoff and landing distances, and decreased the aircraft cargo weight carrying capacity (Birds Fly Free, AMC Doesn't, 1992: 8). The ISU-90 intermodal container's empty weight is almost six times more than the weight of an empty 463L pallet. For example, the weight of 13 empty pallets is 3,900 pounds. In contrast, the weight of 13 empty containers loaded on a C-141 at a weight of 1760 pounds per container is 22,880 pounds. This is a cargo weight difference of 18,980 pounds. The C-141 cargo weight carrying capacity is approximately 69,000 pounds. One-third of the cargo weight carrying capacity of a C-141 would be wasted with the container's tare weight. Using containers instead of pallets rob the C-141 of 18,980 pounds of added cargo carrying weight or 18, 980 pounds of fuel. In turn, 18,980 pounds less fuel reduces the C-141 flying time by one and one-half hours, based on a cruise altitude fuel burn rate of 12,000 pounds per hour. Not only do containers decrease the amount of cargo a C-141 can carry, containers effectively decrease the unrefueled C-141

range by 660 nautical miles, the same distance from McGuire AFB, NJ to Charleston AFB, SC.

Another penalty of the added weight on aircraft performance is the requirement for longer takeoff and landing runways. The added 18,980 pounds for 13 containers lowers the number of usable airfields and most severely restricts takeoffs and landings on wet and icy runways, or in high, hot, mountainous terrain. Similar weight and performance penalties occur for all AMC aircraft. This is a serious limitation to the effective use of intermodal containers.

Interoperability. Unlike the ubiquitous 463L pallet, one size does not fit all aircraft with the intermodal container. As mentioned earlier, the C-141 loses two container positions when using the ISU-90 container, and the C-130 is required to use a ISU-90-I narrow container for the cargo position near the wheel well. In addition, the multimodal containers are not compatible with passenger aircraft that use lower deck containers. The intermodal ISU-90 container can be only used in civilian cargo aircraft or Air Mobility Command aircraft.

Backhaul. Empty container return is another potential constraint of containerization. If the transportation system maintains an even flow, retrograde containers may not be a problem. However, if most of the cargo travels only in one direction, the redistribution of empty containers can become difficult and costly.

For instance, when four fully loaded C-141 aircraft arrive at a destination and transportation personnel want to return the empty pallets to their origin, there would be 13 pallets from each aircraft totaling 52 pallets for return. These 52 pallets would occupy

one pallet position in a single aircraft leaving 51 other positions available for palletized cargo, rolling stock and other backhaul cargo. However, if the four aircraft used containers, all four aircraft would need to return 52 empty containers eliminating the possibility of delivering retrograde rolling stock or other non-compatible cargo. In this situation, the containers would have to be filled with backhaul cargo or travel empty. To make container transportation efficient, containers must be used for cargo backhaul, with their locations carefully monitored. Container accountability is critical whether the container is empty or full.

Expense. Another constraint to replacing the 463L pallets with intermodal containers is the expense. Containers are over six times more expensive than pallets. Each 463L pallet costs approximately $1000.00. Each ISU-90 container costs $6500.00. To replace 180,000 pallets with equivalent containers would cost approximately $1.17 billion (Sherwood, 1996).

Damage. Containers, by their nature are more susceptible to damage than pallets. Pallets can warp and become unusable, but containers such as the ISU-90 have sides made from fiberglass reinforced plastic. Forklifts can damage the sides, and excess weight can be placed on top, deforming their shape and making them unusable. A 1973 study of MODCON containers concluded MODCON containers should not replace the 463L pallet system due to lack of rigidity, deformation, and blunt leading edge damage (Kelley, 1974: 13).

Cargo Fit. In 1974, Michael M. Rice and Dennis E. Welch conducted a study to determine channel cargo compatibility with the 8' x 8' x 5' QUADCON container. They

analyzed 41,364 pieces of channel cargo traffic that flowed between Dover AFB, Delaware, and Rhein Main or Ramstein Air Bases in Germany. They found that 98 percent of the channel cargo, excluding mail and hazardous cargo, could be containerized using the QUADCON container (Rice and Welch, 1975: 45). The QUADCON container is 80 cubic feet smaller than the AAR Cadillac Manufactured ISU-90 container. One could assume the ISU-90 container would achieve similar or better results in a similar test.

In summary, the Department of Defense would gain numerous advantages from implementing an air cargo containerization system. Faster transportation, less handling, better tracking, and better customer service are just a few of the more important benefits. In addition, the feasibility of implementing a containerization system was examined using twelve criteria. The results clearly show that air cargo containerization is feasible to implement, but has numerous drawbacks. Finally, this chapter explored the constraints associated with implementing an air cargo containerization system. Container tare weight and container backhaul appear to be the most serious limitations of such a system.

IV. Recommendations and Conclusion

Overview

In Chapter 1, this paper listed research questions designed to help the reader fully understand the objectives of this study. This chapter will review the results of those questions. Next, this chapter will take the benefits, feasibility, and constraints associated with implementing a containerization program discussed in Chapter 3 and describe the next steps required prior to implementing a system for air cargo containerization.

Review of Questions

This paper showed how ground handling equipment compatibility would not restrict the implementation of an air cargo containerization system. The current and projected acquisition of Air Force ground handling equipment is, and will continue to be, compatible with the ISU-70 and ISU-90 containers.

Container fit was also examined and shown to be a problem with implementation of an air cargo containerization system. The ISU-90 containers limit the C-141 to 11 of 13 pallet position. A different container, the ISU-60, is required for the first and last pallet position. A special container, the ISU-90-I, is required for the wheel-well section of the C-130 fuselage. The KC-10 and KC-135 also require different containers, the ISU-70. Finally, there is very limited container compatibility between Air Mobility Command's organic airlift aircraft and the Civil Reserve Air Fleet aircraft. Based on the different fuselage shapes, cargo floors, and locking mechanisms, container fit continues to be a problem with the implementation of an air cargo containerization system.

Container tare weight is a significant problem associated with the implementation of an air cargo containerization system. Container tare weight robs the C-141 of one-third of its weight cargo-carrying capability. In addition to less cargo, it also decreases the C-141 takeoff, climb, landing, and range performance. All organic and commercial airlift would suffer similar performance handicaps from using the ISU-60, ISU-70, or ISU-90 containers.

Container return and backhaul remain a logistical concern for the implementation of an air cargo containerization system. Empty ISU-90 containers require approximately 50 times the storage space of an empty 463L pallet. Container return is not a problem when air cargo has a balanced bi-directional flow. However, when the flow is in a single direction, or when the backhaul cargo in not suitable for containerization, empty containers accumulate where they are not needed.

Finally, intermodal container use can streamline cargo flow through aerial ports. Containerization eliminates the need to breakdown and repackage cargo. In addition, containerized cargo offers transportation managers the benefits of less handling, pilferage, damage, as well as faster cargo movement. Much of the more rapid cargo flow can be attributed to a reduction in redundant operations such as weighing and inspecting cargo more than once.

Future Plans

Chapter 3 described the benefits, feasibility, and constraints of implementing a containerization program. The benefits demonstrated how using an intermodal air cargo container can increase transportation efficiency. Yet, such a program raises many

misgivings. The Department of Defense must examine in more detail these concerns and determine the steps necessary to overcome them. These steps include more research, modeling, testing, and implementation.

Research. This paper presented an overview of the need for a military air containerization system. More in-depth empirical research is required to continue the study. New research can focus more precisely on the benefits, feasibility, and constraints associated with a global air cargo containerization system.

Modeling. After sufficient research and information is gathered, transportation experts must develop possible solutions to increasing transportation efficiency. Modeling is an efficient method to examine the feasibility of implementing a new containerization program. Modeling can eliminate programs due to unforeseen circumstances. Modeling can provide the necessary answers to our transportation questions when analyzing different proposals.

Testing. The Department of Defense should conduct limited tests to verify the conclusions resulting from the modeling phase. A channel mission test, similar to the 1975 Rice and Welch Dover to Ramstein study, should be conducted testing new air cargo containers to see if the benefits are actually realized during a small scale operation. In the future, the drawbacks, such as container tare weight, may be minimized due to more fuel efficient engines. Perhaps the drawbacks are worse than anticipated. Testing may conclude that the current pallet system is the best system. Pallets may be the only solution due to the unique nature of the military mission. Researchers may find only small modifications to pallets are necessary to achieve many of the benefits of containerization.

New collapsible containers may be developed reducing the backhaul dilemma. Further study and testing must be conducted to verify the research conclusions.

Implementation. If the testing proves that a new system works and is beneficial, then implementation is the next logical step. Implementation, due to fiscal realities, may be incremental or not at all. If a new air cargo containerization system is the solution, and implementation is incremental, the Department of Defense should begin the program in areas that benefit the most from the new system. If containers are found to be most effective for units that deploy on a moment's notice, taking time to organize, sort, pack, and crate after deployment notification may result in critical wasted time.

Conclusion

The problem of inefficient cargo movement needs to be examined throughout the logistical pipeline and not with any singular component alone. Implementing an air cargo containerization program without looking at the collateral effects on other transportation systems may suboptimize the overall system. For example, containerization should not be examined without analyzing a better cargo tracking system. Intransit visibility is fundamentally important to the movement of cargo. The Department of Defense should not develop a containerization program that is incompatible with a new intransit visibility program. Defining the problem in a sufficiently broad scope requires transportation experts to examine how the Department of Defense can improve its transportation efficiency. This broad-scope perspective enables researchers to include areas such as door-to-door service, maximizing each mode of travel for its inherent strengths, facility locations, and transportation routings. The overall transportation system can be optimized

by including these areas. The USAF should not implement an air cargo containerization program that moves cargo more rapidly within the United States, but causes the cargo to slow to a crawl in Europe due to incompatible NATO cargo handling equipment.

The transportation industry has seen the proven benefits of cargo containerization in other modes of transportation. The civilian air sector has transitioned to containerization. The military has a unique mission and many of the luxuries that the civilian transportation industry enjoy are not available in the military arena. Hopefully, with further research, modeling, testing, and implementation, this paper has planted the seed necessary to improve our Department of Defense transportation system.

Bibliography

AAR Cadillac Manufacturing. Mobility Systems. Containers, Pallets, and Accessories Catalog. Cadillac MI: AAR Cadillac Manufacturing, February 1995.

Adams, Gary. "Joint Intermodal Container Program (JICP)," Point Paper to Brig Gen Handy, TCJ3-J4-LLC, USTRANSCOM, Scott AFB IL, 1995.

Berg, Wayne. "Containerization Arrives: It's Called '463L,'" The MAC Forum, 1: 36-8 (January 1992).

Birds Fly Free, AMC Doesn't. Department of the Air Force. AMC Pamphlet 55-51. Scott AFB IL: HQ AMC, 1 June 1992.

Bishop, Edward D. Containerization: An Integral Part of U.S. Force Projection Capability. Research report, Industrial College of the Armed Forces, National Defense University, Ft McNair DC, April 1993 (AD-A276 883).

Brown, Jan. Manager of Contract Administration, AAR Cadillac Manufacturing, Cadillac MI, Telephone interview. 10 April 1996.

Cavin, Glynn W., Jr. The Economic Health of the Airline Industry and Its Impact on National Security. Research report, Industrial College of the Armed Forces, National Defense University, Ft McNair DC, April 1993 (AD-A276 748).

Coyle, John J. and others. Transportation (Fourth Edition). St Paul MN: West Publishing Company, 1994.

Delia-Loyle, Donna. "Sea-Air: Cheap and Fast," Global Trade: 16-18 (February 1992).

Diaz, Felix T. Air Terminal Operations Center Division Chief, 305 Aerial Port Squadron, McGuire AFB NJ. Personal interview. 8 April 1996.

Fetter, R.B. and R.C. Steorts. A Model for the Design and Evaluation of Air Cargo Systems. Contract AF 49(638)-1700, The Rand Corporation, Santa Monica CA. October 1966.

Fogleman, Ronald R. "Reengineering Defense Transportation," Joint Forces Quarterly: 75-79 (Winter 1993-1994).

-----. "General Ronald R. Fogleman, Commander in Chief, United States Transportation Command and Commander, Air Mobility Command," An Oral History: 63 (March 1995).

Hershman, Mark S. C-17 Pilot, HQ AMWC, Ft Dix NJ. Personal interview. 8 April 1996.

Kelley, Russell K. MAC Participation in Joint Service Testing of the Intermodal Modular Container (MODCON).Final report, Military Airlift Command, Scott AFB IL, January 1974 (AD- 916 698).

Khan, M. A. and W. C. Neuhauer, Jr. "Bimodal Movement of Air Cargo: Progress and Problems," Journal of Purchasing and Materials Management: 11-15 (Spring 1979).

Miles, Gregory L. "Intermodal's Next Conquest," International Business: 24-26 (April 1995).

"Mix and Match Freight to Meet Every Budget," Asian Business: 56-61 (February 1988).

Muller, Gerhardt. Intermodal Freight Transportation (Second Edition). Westport CT: ENO Foundation for Transportation, Inc., 1989.

Nelson, Charles R. "Keeping the Edge," Program Manager: 32-41 (January - February 1992).

"New Containers Reduce Deployment Time and Effort—Pennsylvania 171st ARW Leaves the Skids Behind," Airlift/Tanker Quarterly, 3: 17 (Summer 1995).

Patterson, J. David. "Commercial Airlift Can't Handle War's Requisites," National Defense: 12-13 (December 1993).

Raguraman, K., and Claire Chan. "The Development of Sea-Air Intermodal Transportation: An Assessment of Global Trends," Logistics and Transportation Review: 379-396 (1994).

Rice, Michael M., and Dennis E. Welch. The Potential of an 8 x 8 x 5 ft. Intermodal Container as a Unitization Medium for Routine Military Air Cargo. MS Thesis, AFIT/SLGR. School of Systems and Logistics, Air Force Institute of Technology (AU), Wright-Patterson AFB OH, January 1975 (AD-A006675).

Roberts, Roger W. A Comparison of Military and Civilian Air Cargo Systems. Masters Thesis, Naval Postgraduate School, Monterey CA., September 1979, (AD-A078 503).

Rutherford, Robert L. "The 50th Annual NDTA Transportation and Logistics Forum and Exposition," Defense Transportation Journal: 12-19 (December 1995).

Sherwood, James. Military Sales Specialist, AAR Cadillac Manufacturing, Cadillac MI, Telephone interviews. 8-16 April 1996.

Weingarten, Joseph L. Impact of Intermodal Containerization on USAF Cargo Airlift. Technical Report, Deputy for Engineering, ASD, Wright-Patterson AFB OH., August 1972 (AD-753 906).

Vita

Major Joseph W. Mancy was born on 15 October 1960, in Chapel Hill, North Carolina. He graduated from Ann Arbor Pioneer High School in 1978, and entered undergraduate studies at Michigan State University in East Lansing, Michigan. He graduated with a Bachelors of Science degree in Engineering Arts in 1983.

He received his commission on 25 May 1984 upon graduation from Officer Training School. After completing Undergraduate Pilot Training at Laughlin AFB, his first assignment was flying C-141B transport aircraft at Charleston AFB, South Carolina and serving as a squadron safety officer. His second assignment was to Ramstein AB, Germany, where he flew C-21A Learjets, and served as flight commander and evaluator pilot flying dignitaries throughout Europe and the Middle East. His third assignment took him back to the C-141B transport where he served as flight commander, group executive officer, and evaluator pilot at McChord AFB, Washington. While at McChord AFB, he earned a Master of Science degree in International Relations from Troy State University. In February 1995, he entered the School of Logistics and Acquisition Management, Air Force Institute of Technology as part of the Advanced Study of Air Mobility (ASAM) program. His next assignment will take him to the Mobility Requirements branch at the Pentagon (HQ AF/XORM).

Permanent Address: 102 Westminster Ave
Summerville, SC 29485

REPORT DOCUMENTATION PAGE

Form Approved
OMB No 0704-0188

Public reporting burden for this collection of information is estimated to average 1 hour per response, including the time for reviewing instructions, searching existing data sources, gathering and maintaining the data needed, and completing and reviewing the collection of information. Send comments regarding this burden estimate or any other aspect of this collection of information, including suggestions for reducing this burden, to Washington Headquarters Services, Directorate for Information Operations and Reports, 1215 Jefferson Davis Highway, Suite 1204, Arlington, VA 22202-4302, and to the Office of Management and Budget, Paperwork Reduction Project (0704-0188), Washington, DC 20503.

1. AGENCY USE ONLY *(Leave blank)*

2. REPORT DATE
May 1996

3. REPORT TYPE AND DATES COVERED
Graduate Research Paper

4. TITLE AND SUBTITLE
MILITARY AIR CARGO CONTAINERIZATION

5. FUNDING NUMBERS

6. AUTHOR(S)
Joseph W. Mancy, Major, USAF

7. PERFORMING ORGANIZATION NAME(S) AND ADDRESS(ES)
Air Force Institute of Technology,
WPAFB OH 45433-7765

8. PERFORMING ORGANIZATION REPORT NUMBER
AFIT/GMO/LAL/96J-4

9. SPONSORING / MONITORING AGENCY NAME(S) AND ADDRESS(ES)
HQ AMWC/WCOA
FT DIX NJ 08640

10. SPONSORING / MONITORING AGENCY REPORT NUMBER

11. SUPPLEMENTARY NOTES

12a. DISTRIBUTION / AVAILABILITY STATEMENT
Approved for public release; distribution unlimited

12b. DISTRIBUTION CODE

13. ABSTRACT *(Maximum 200 words)*

The transportation industry has seen the proven benefits of cargo containerization in other modes of transportation. The civilian air sector has gone to containerization. Unlike the civilian counterparts, the Air Force did not make the transition to containers, even though containers have proven themselves to be more economical and efficient in both the surface transportation and civilian air cargo transportation industries. Limited military studies validate the improved efficiency of air cargo containerization, but obstacles remain. This study addresses the possible use of air intermodal containers to replace the current 463L pallet system. The air intermodal container is examined based on the benefits, feasibility, and constraints associated with its use. The Department of Defense must continue to examine the transportation process. Implementing an air cargo containerization program without investigating collateral effects on other transportation systems may suboptimize the overall system.

14. SUBJECT TERMS
Air Cargo, Containerization, 463L Pallet, Intermodal Transportation, Unitized cargo, Intermodalism

15. NUMBER OF PAGES
55

16. PRICE CODE

17. SECURITY CLASSIFICATION OF REPORT
Unclassified

18. SECURITY CLASSIFICATION OF THIS PAGE
Unclassified

19. SECURITY CLASSIFICATION OF ABSTRACT
Unclassified

20. LIMITATION OF ABSTRACT
UL

AFIT Control Number AFIT/GMO/LAL/96J-4

AFIT RESEARCH ASSESSMENT

The purpose of this questionnaire is to determine the potential for current and future applications of AFIT research. **Please return completed questionnaire** to: DEPARTMENT OF THE AIR FORCE, AFIT/LAC BLDG 641, 2950 P STREET, WRIGHT-PATTERSON AFB OH 45433-7765 or e-mail to dvaughan@afit.af.mil or nwiviott@afit.af.mil. Your response is **important.** Thank you.

1. Did this research contribute to a current research project? a. Yes b. No

2. If you answered YES to Question #1, do you believe this research topic is significant enough that it would have been researched (or contracted) by your organization or another agency if AFIT had not researched it? a. Yes b. No

3. The benefits of AFIT research can often be expressed by the equivalent value that your agency received by virtue of AFIT's performing the research. **Please estimate** what this research would have cost in terms of manpower and dollars if it had been accomplished under contract or if it had been done in-house.

Man Years_____ $_____

4. Whether or not you were able to establish an equivalent value for this research (in Question 3), what is your estimate of its significance?

a. Highly Significant b. Significant c. Slightly Significant d. Of No Significance

5. Comments (Please feel free to use a separate sheet for more detailed answers and include it with this form):

_____ _____

Name and Grade Organization

_____ _____

Position or Title Address