SPECIAL REPORT 96-4

Object-GAWSER
Object-Oriented Guelph All-Weather Storm-Event Runoff Model

Phase I: Training Manual
Application of Object-Oriented Simulation to Hydrologic Modeling

John A. Hinckley, Jr.

February 1996

19960418 016

DISTRIBUTION STATEMENT A
Approved for public release;
Distribution Unlimited

DTIC QUALITY INSPECTED 1

Abstract

Hydrologic models are currently used to understand the economic and ecological imacts of hydrologic processes. A new hydrologic model entitled Object-GAWSER was designed using an object-oriented platform to provide new insights into watershed hydrology. Object-GAWSER is a temperature index model that simulates upland watershed hydrology. Object-GAWSER is different from other hydrologic models in that each one of its components can be easily studied to understand its sensitivity to various inputs. First, this report will show how Object-GAWSER can be used to simulate the hydrologic behavior of forested, agricultural, and suburban watersheds. Second, this report will describe how Object-GAWSER was designed.

For conversion of SI units to non-SI units of measurement consult *Standard Practice for Use of the International System of Units (SI),* ASTM Standard E380-93, published by the American Society for Testing and Materials, 1916 Race St., Philadelphia, Pa. 19103.

This report is printed on paper that contains a minimum of 50% recycled material.

Special Report 96-4

US Army Corps
of Engineers
Cold Regions Research &
Engineering Laboratory

Object-GAWSER
Object-Oriented Guelph All-Weather Storm-Event Runoff Model
Phase I: Training Manual
Application of Object-Oriented Simulation to Hydrologic Modeling

John A. Hinckley, Jr.

February 1996

Prepared for
OFFICE OF THE CHIEF OF ENGINEERS

Approved for public release; distribution is unlimited.

PREFACE

This report was prepared by John A. Hinckley, Jr., Physical Science Technician, Remote Sensing/GIS Center, Programs and Resources Directorate, U.S. Army Cold Regions Research and Engineering Laboratory, Hanover, New Hampshire. Funding was provided by the Remote Sensing Research Program, under *Object-Oriented Methods for the Analysis of Spatial Data and Spatially Distributed Snowpack Information from Satellite and Aircraft Data.*

The author thanks Dr. Perry LaPotin and Bruce Pickard of CRREL for their technical review of this report.

The author acknowledges Dr. Harlan L. McKim, who provided him the opportunity to participate in the Remote Sensing Research Program and further his knowledge of hydrology. He also thanks Dr. Perry LaPotin for his modeling and literary advice; Dr. LaPotin helped construct and debug Object-GAWSER. The author greatly appreciates the help of Dr. E.A. Cassell, of the University of Vermont, who also helped with modeling and reviewed documentation. Furthermore, Dr. Cassell's mentoring has expanded the author's interest in hydrology and motivated his efforts to develop Object-GAWSER. Dr. Harold Schroeter, of Schroeter and Associates, the original author of this model, deserves a very special word of thanks for providing his consulting services. Dr. Schroeter's knowledge of GAWSER (the original version of Object-GAWSER) and hydrology was essential in overcoming modeling hurdles.

The contents of this report are not to be used for advertising or promotional purposes. Citation of brand names does not constitute an official endorsement or approval of the use of such commercial products.

CONTENTS

Preface ii
Introduction 1
History of Object-GAWSER 1
Characterization of the watershed 1
Preliminary description of STELLA II objects 3
Sector organization of Object-GAWSER 3
Sector hydrology 4
Data inputs sector 4
Outputs sector 6
Programming instructions 6
General inputs 6
Inputs for SNOWMLT 8
Inputs for GROFF1 8
Inputs for GROFF2 9
Inputs for GROFF3 10
Inputs for GROFF4 10
Inputs for GROFF5 12
Input for SBS_STOR_&_FLOW_1 and SBS_STOR_&_FLOW_2 12
Input for GDWTR_STOR_&_BASFLW_1 and GDWTR_STOR_&_BASFLW_2 12
Inputs for SRFRNF 12
Inputs for CHNLRTNG 13
Example simulations 13
Forested watershed 13
Agricultural watershed simulation 14
Suburban watershed simulation 14
Technical description of SNOMLT 16
Hydrology section 16
Density/depth section 20
Graphical descriptions of SNOMLT 22
Demonstration of conservation of mass 24
Technical description of GROFF2 26
Discussion of equations 28
Demonstration of conservation of mass 29
Technical description of SBS_STOR_&_FLOW_1 30
Technical description of SRFRNF 32
Technical description of CHNLRTNG 36
Sector linkages 38
Results 41
Results from the SNOMLT sector 41
Results from GROFF2 47
Routing results 50
Conclusion 52
Literature cited 53
Abstract 55

ILLUSTRATIONS

Figure

1. The control volume 2
2. Basic STELLA II diagram 3
3. Example Object-GAWSER sector in Object-GAWSER 3
4. DATA INPUTS sector 5
5. OUTPUTS sector 6
6. Discharge from a forested watershed 14
7. Discharge from an agricultural watershed 15
8. Discharge from a suburban watershed 15
9. Structural diagram for the "Basic Hydrology section" 17
10. Structural diagram for object-code required to better simulate melting and refreezing 17
11. Structural diagram for the Density/Depth section 20
12. Behavior of model inputs 22
13. Demonstration of the behavior of SWC and LWC with respect to TEMPs 22
14. Demonstration of the behavior of EXCESS_LWC with respect to LWC and LWCAP 23
15. Demonstration of the relationships between TEMPs and SDEP 24
16. Demonstration of the behavior of RHO and TRHO_I with respect to TEMPs 24
17. Demonstration of the behavior of TRHO_DEL and TRHO_II 25
18. Basic structural diagram for GROFF2 27
19. Structural diagram for SA_I and SA_II 29
20. Basic structural diagram for subsurface flow routing 31
21. Structural diagram for runoff routing 33
22. Lag created by linear reservoir 35
23. Behavior of the lag and route structure 35
24. The entire channel routing sector 37
25. Inflow and outflow from a fictitious channel segment 38
26. The two linkages between SNOMLT and GROFF1 39
27. The linkage between GROFF1, GROFF2, GROFF3, GROFF4, GROFF5 and SRFRNF ... 40
28. The link between GROFF2 and SBS_STOR_&_FLOW_1 40
29. Links used to simulate discharge from the watershed outlet 41
30. Behavior of the solid water content of the snowpack 42
31. The one-hour difference between SWC and GAWSER_SWC 42
32. Lquid water content of the snowpack 43
33. Behavior of SDEP and GAWSER_DEPTH relative to TEMPs 43
34. Behavior of the density of the snowpack 44
35. Behavior of RHO relative to TEMPs 44
36. Behavior of the liquid water released from the snowpack 45
37. Behavior of infiltration 46
38. Behavior of infiltration using another initial value of TINF 46
39. Behavior of available storage in the top layer of soil 47
40. Behavior of runoff 48
41. Behavior of runoff using a different initial value for TINF 48
43. Available storage in the bottom soil layer 49
44. Behavior of percolation 50
45. Behavior of a linear reservoir in Object-GAWSER 51
46. Behavior of the lag and route structure 51
47. Behavior of the Muskingum structure 52

TABLES

Table

1. Description of the adjustment factors 7
2. Description of the input parameters used to generate the three scenarios 13
3. Variables and initial conditions for the hydrology sector 16
4. Variables and initial conditions for the density/depth sector 21
5. Conservation of mass within SWC 25
6. Demonstration of conservation of mass with LWC 26
7. Demonstration of conservation of mass within SDEP 26
8. Tabular demonstration of the behavior of RHO, TRHO_I, TRHO_II, and MRHO with respect to TEMPS 26
9. Explanation of the variables in GROFF2 of the generation of runoff submodel 27
10. Tabular demonstration of conservation of mass within STOR 30
11. Tabular demonstration of conservation of mass within TP_LYR 30
12. Tabular demonstration of conservation of mass within BTM_LYR 30
13. Explanation of the subsurface routing variables 31
14. Explanation of the surface routing variables 33
15. Explanation of the channel routing variables 36
16. Description of the variables considered in *Sector Linkages* 39

Object-GAWSER
Object-Oriented Guelph All-Weather Storm-Event Runoff Model
Phase I: Training Manual
Application of Object-Oriented Simulation to Hydrologic Modeling

JOHN A. HINCKLEY, JR.

INTRODUCTION

Object-GAWSER is a temperature index snowmelt model that can be used to demonstrate watershed hydrology. Object-GAWSER is best suited for agricultural or forested watersheds, but can be used to demonstrate the hydrology of other types of watersheds, such as urban or suburban watersheds. Because Object-GAWSER is applicable to watersheds with different levels of development, it can be used to show the effect of development on the hydrology of watersheds. For example, to observe the hydrologic impact of forest clearing for agriculture, Object-GAWSER can be programmed to simulate the hydrology of a forested watershed and then reprogrammed to simulate the hydrology of an agricultural watershed. One can examine the behavior of various hydrologic processes such as runoff, infiltration, baseflow, etc., for each watershed. Object-GAWSER was created using STELLA II, an object-oriented programming language, which allows users to observe the flow of water on the computer screen via animated objects, graphs, and tables (Richmond and Peterson 1994).

History of Object-GAWSER

In 1977, Hugh Whiteley and S.R. Ghate of the University of Guelph in Ontario, Canada, created the first version of GAWSER (1.0) for the PLUARG (Pollution and Land Use Activities Reference Group) Study. Version 1.0 of GAWSER evolved from the HYMO program made by the U.S. Department of Agriculture and was created using Fortran IV. GAWSER was revised and updated 15 times from 1977 to 1989 by several different authors. By 1989, Harold Schroeter developed version 5.4 of GAWSER and the *GAWSER Training Guide and Reference Manual.* GAWSER (5.4) was calibrated for use in southwestern Ontario, Canada (Schroeter 1989).

By 1995, GAWSER (5.4) was recreated in object-oriented format using STELLA II (Richmond and Peterson 1994). To date, the sections entitled "Snow melt sub-model," "Generation of Runoff," "Overland Runoff Routing," "Subsurface and Baseflow Routing," and "Channel Routing" from the *GAWSER Training Guide and Reference Manual* have been created in object-oriented format.

Object-GAWSER was developed from the equations and descriptions in the *GAWSER Training Guide and Reference Manual* and calibrated to GAWSER (5.4) in three steps. First, Object-GAWSER was programmed with the same historic data used to calibrate GAWSER (5.4). Second, numeric outputs from GAWSER (5.4) were compared with the corresponding numeric outputs from Object-GAWSER. Third, the input parameters of Object-GAWSER were adjusted to correct the differences between its outputs and those of GAWSER (5.4).

Characterization of the watershed

Object-GAWSER characterizes the watershed as three zones (one impervious zone and two pervious zones). The impervious zone (zone 1) is considered to be the area of the watershed that is

impenetrable to water such as paved areas, ditches, and stream channels. Each of the two pervious zones (zone 2 and zone 3) is a distinct soil group composed of a top layer and a bottom layer. Subsurface storage is located beneath the bottom soil layer. Groundwater storage is located beneath subsurface storage.

The control volume in Figure 1 further shows how watersheds are characterized in Object-GAWSER. The control volume illustrates all the physical processes simulated by Object-GAWSER except watershed discharge and channel flow. The sum of runoff, subsurface flow and baseflow is the discharge from the watershed outlet. Channel flow in the watershed is considered within the runoff routing equations in Object-GAWSER.

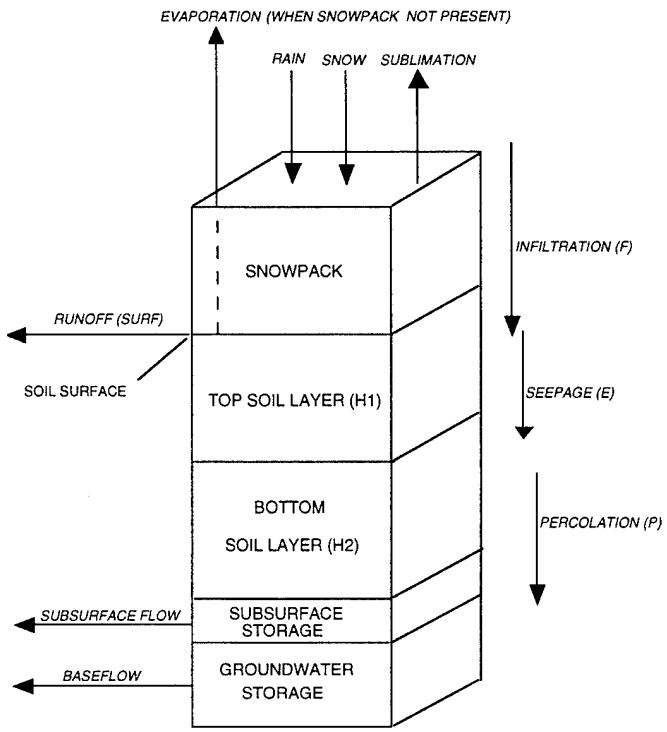

Figure 1. The control volume. This figure shows the hydrologic processes (except discharge and channel flow) that occur in a watershed as characterized by Object-GAWSER. In Object-GAWSER, discharge from the base of the watershed is the sum of runoff, subsurface flow, and baseflow. Channel flow within the watershed boundary is implicit within runoff routing equations.

The inputs to Object-GAWSER are rain and snow and the outputs are evaporation (when the ground is bare), sublimation (when the ground is snow covered), runoff, subsurface flow, and baseflow. The soil surface is the interface between the bottom of the snowpack and the top of the top layer of soil.

Within the control volume, rain and melted snow can follow one of two paths. Rain and melted snow can either infiltrate from the top of the snowpack down into the top layer of soil or infiltrate from the top of the snowpack to the soil surface and then move laterally over the soil surface as runoff. The path taken by rain and melted snow is determined by the amount of depression storage at the soil surface and the infiltrability of the soil. For example, once rain or melted snow infiltrates from the top of the snowpack to the soil surface, it accumulates on the soil surface in depression storage and then infiltrates into the top soil layer. When depression storage is filled, additional rain or melted snow moves laterally over the soil surface as runoff. From the top layer of soil, all water seeps down into the bottom soil layer. Finally, water percolates from the bottom soil layer into subsurface storage. From subsurface storage, water percolates to groundwater storage. Water leaves subsurface storage as subsurface flow and groundwater storage as baseflow. Subsurface flow is the lateral movement of water near the soil surface, and baseflow is the lateral movement of water far beneath the soil surface. Subsurface flow is quicker than baseflow and slower than runoff.

Preliminary description of STELLA II objects

An understanding of STELLA II objects is necessary to use Object-GAWSER. The objects are shown in Figure 2. The following is from McKim et al. (1993):

> Rectangles represent levels (integral equations). Levels accumulate or deplete depending on the X-values that are connected to them (i.e. they are assigned an initial condition, and then allowed to integrate the differential equations symbolized by the rates). The rectangles are referred to as the "state variables" for the system since they have the capacity to change *states* through time and space. The term "steady state" is used to describe a state variable invariant in time (and/or space).

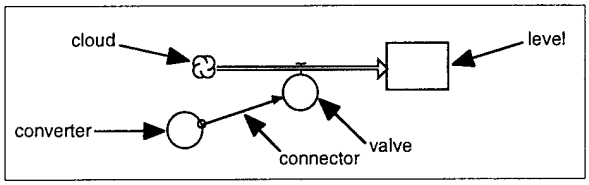

Figure 2. Basic STELLA II diagram.

Open circles are referred to as "converters" and function to convert inputs to outputs. The inputs may be equations or logical statements (open circles) or numerical relationships (circles containing tildes). Converters do not accumulate but change instantaneously over the simulation run.

A "cloud" represents *sources* or *sinks*. If an arrow points into the cloud it must be a sink. Conversely, an arrow pointing away from a cloud implies that the cloud must be a source. [In Figure 2, the cloud represents a source.]

Valves represent *rates (differentials)*. The object is meant to symbolize a plumber's valve that opens or closes depending on physical conditions. When the valve opens, water will 'flow' from the cloud (the source) into the level.

Solid arrows are referred to as "connectors" or information flows, and function to depict the causal linkages among the objects (variables) in the model. Connectors have no numerical value.

The combination of a cloud, valve, and arrow is referred to as a "flow" (McKim et al. 1993, Richmond and Peterson 1994).

Sector organization of Object-GAWSER

Object-GAWSER's concept of the watershed is expressed using 12 interconnected compartments called "sectors." A sector is a grouping of related STELLA II objects that simulates the hydrologic processes in a given part of a watershed (Fig. 3). The 12 sectors are interconnected in that the output from one sector can become the input to another sector. Figure 3 is a sample Object-GAWSER sector. This sector, called GROFF1, simulates storage and runoff in impervious areas.

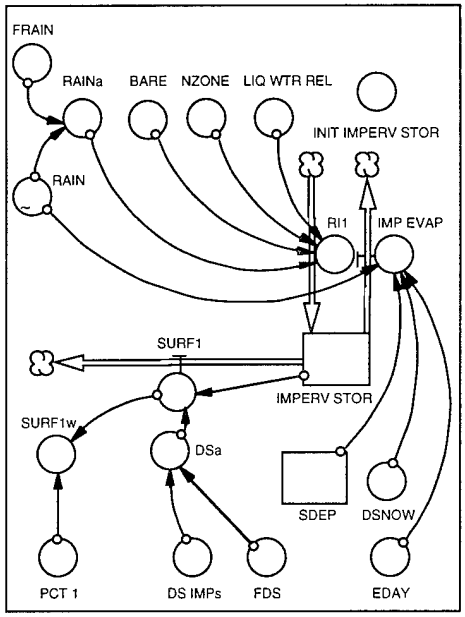

Figure 3. Example Object-GAWSER sector in Object-GAWSER. The sector shown is GROFF1 and contains the objects that calculate the hydrology of impervious surfaces.

The 12 sectors in Object-GAWSER are entitled the following:

SNOMLT (snowmelt)
GROFF1 (first generation of runoff sector)
GROFF2 (second generation of runoff sector)
GROFF3 (third generation of runoff sector)
GROFF4 (fourth generation of runoff sector)
GROFF5 (fifth generation of runoff sector)
SBS_STOR_&_FLOW_1 (first subsurface storage and routing),
GDWTR_STOR_&_BASFLW_1 (first groundwater storage and baseflow routing sector)
SBS_STOR_&_FLOW_2 (second subsurface storage and routing sector),
GDWTR_STOR_& BASFLW_2 (second groundwater storage and baseflow routing sector)
SRFRNF (surface runoff routing), and CHNLRTNG (channel routing).

SNOMLT simulates the hydrology of the snowpack, which lies above the soil surface. SRFRNF simulates the water that flows over the soil surface and through channels to the watershed outlet. GROFF1 simulates the hydrology of impervious surfaces in the watershed (or zone 1). GROFF2, GROFF3, GROFF4, and GROFF5 collectively represent the hydrology of pervious surfaces in the

watershed, including the soil surface and the top and the bottom soil layers in the watershed. The sum of GROFF2 and GROFF3 represents zone 2 and the sum of GROFF4 and GROFF5 represents zone 3. SBS_STOR_&_FLOW_1 represents subsurface storage and flow for zone 2. GDWTR_STOR_&_BASFLW_1 represents groundwater storage and baseflow routing for zone 2. SBS_STOR_&_FLOW_2 represents subsurface storage and flow for zone 3. GDWTR_STOR_&_BASFLW_2 represents groundwater storage and baseflow routing for zone 3. Finally, CHNLRTNG represents a fictitious channel which begins at the at the base of the watershed whose inflow is the discharge from the watershed outlet.

In addition to the 12 sectors which represent the watershed, there are two sectors contained within a user interface. The 13th sector, the DATA INPUTS sector, is used to program the model. The 14th sector, the OUTPUTS sector, is used to observe the outputs from the model.

Sector hydrology

This section describes the simulated flow of water through the sectors in Object-GAWSER. Before reading this section, make sure you understand the descriptions of the sectors in the preceding paragraph.

The flow of water in Object-GAWSER begins in the SNOMLT sector. Water leaves SNOMLT in two ways. First, water that sublimates off the snowpack leaves SNOMLT via an object called "SUBLM," but does not enter any other sector (sublimated water enters the atmosphere, an area not represented by a sector in Object-GAWSER). Second, water that percolates out of the snowpack to the soil surface goes to GROFF1, GROFF2, GROFF3, GROFF4, and GROFF5 because these sectors represent the area underneath the snowpack. Each of the five GROFF sectors receives the same amount of water from SNOMLT, but the amount of water that flows out of each GROFF sector is weighted according to the aerial proportion of the watershed simulated by each GROFF sector.

Water leaves GROFF1 by two pathways. First, evaporated water from depression storage on bare impervious surfaces leaves GROFF1 via an object called IMP_EVAP; like sublimated water from SNOMLT, evaporated water does not enter any other sector. Second, the water that becomes runoff, once depression storage is filled, is represented by the flow of water from GROFF1 to SRFRNF.

Water leaves GROFF2, GROFF3, GROFF4, and GROFF5 by three pathways. First, the water that percolates from the bottom soil layer into subsurface storage is represented by the flow of water from GROFF2 and GROFF4 to SBS_STOR_&_FLW_1 and SBS_STOR_&_FLW_2, respectively. The water that percolates from the bottom soil layer, through subsurface storage and into groundwater storage, is represented by the flow from GROFF3 and GROFF5 to GDWTR STOR_&_BASFLW_1, and GDWTR_STOR_&_BASFLW_2, respectively.

Second, water that becomes runoff once depression storage is filled is represented by the flow of water from GROFF2, GROFF3 , GROFF4, and GROFF5 to SRFRNF. Third, when the ground is bare, evaporation from depression storage is represented by an object called EDAY, which removes a specified amount of water from GROFF2 through GROFF5. Like the evaporated water from GROFF1, the evaporated water from GROFF2 through GROFF5 is not routed to another sector in Object-GAWSER.

The outputs from SBS_STOR & FLW_1, GDWTR_STOR_ & FLW_1, SBS_STOR_ & FLW_2, and GDWTR_STOR_ & FLW_2 go to CHNLRTNG to represent the subsurface flow and baseflow components of discharge from the watershed outlet. The output from SRFRNF goes to CHNLRTNG to represent the surface runoff component of discharge from the watershed outlet. The total input to the CHNLRTNG sector represents the discharge from the watershed outlet.

DATA INPUTS SECTOR

This section describes how the objects which represent input parameters are programmed in Object-GAWSER. Input parameters are located in the DATA INPUTS sector in the main object-model (Fig. 4).

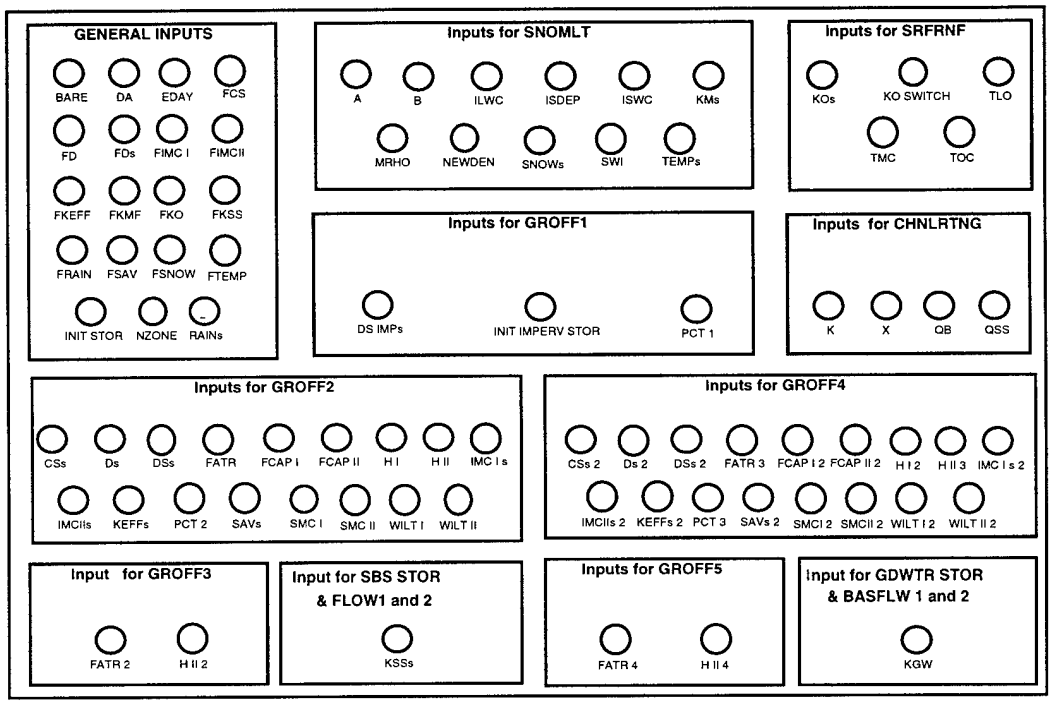

Figure 4. DATA INPUTS sector. The input parameters for Object-GAWSER are programmed in this sector. Similar input parameters are lumped together in boxes. The GENERAL INPUTS box includes those input parameters that are meteorological inputs and those input parameters that apply to more than one sector in the main object model. Every other box corresponds to a sector in the main object model.

Similar input parameters are grouped together in the boxes entitled General Inputs. General input parameters include objects that occur in more than one sector in the main object model. For example, BARE (percentage of ground not covered by snow), located in the upper left-hand corner of the General Inputs box, occurs in every GROFF sector (GROFF1, GROFF2, etc.) in the main object model. All other input boxes in the DATA INPUTS sector correspond to a sector in the main object model. For example, the "Inputs for SNOMLT" box represents the input parameters for the SNOMLT sector.

The input parameters whose names begin with the letter "F" are adjustment factors for set values, which are represented by input parameters whose names end with a lowercase "s." The set values are multiplied by the adjustment factors to yield adjusted values, which are represented by the objects whose names end with a lowercase "a." For example, FCS (maximum seepage rate) from the "General Inputs" box is the adjustment factor for CSs located in the "Inputs for GROFF2" box and for CSs_2 located in the "Inputs for GROFF4" box. The product of FCS and CSs is calculated in CSa (from GROFF1) and CSa_2 (from GROFF2). The product of FCS and CSs_2 is calculated in CSa_3 (from GROFF4) and CSa_4 (from GROFF5). CSa, CSa_2, CSa_3, and CSa_4 are not located in the DATA INPUTS sector because they are not input parameters.

Input parameters are programmed first by double clicking on the object representing the desired input parameter. A dialogue box will then appear on the screen. A description and the units of the input parameter will appear at the top of the dialogue box. At the bottom of the dialogue box there will appear a highlighted area where the value for the input parameter can be typed in using the keyboard. Once the value for the input parameter has been entered, click on the "OK" button and you will return to the main menu.

Meteorological inputs (RAINs, SNOWs, and TEMPs) are programmed differently than the other input parameters in that they contain a graphical function. To program a meteorological input, first double click on it to view its contents. When the dialogue box appears, click once on the "TO

EQUATION" bar. A new dialogue box will appear that contains a column entitled "OUTPUTS." This column contains hourly values and can be edited by highlighting the value to be edited, entering the desired value, and hitting the return key. One can scroll through the outputs column by using the scroll bar in the center of the dialogue box. The graphical functions can currently store 90 hours of data, but can be reprogrammed for significantly more data storage. For more information on graphical functions, see p. 4-18–4-20 in Richmond and Peterson (1994).

Meteorological input parameters are currently programmed with temperature, snowfall, and rainfall data recorded at the Elora Research Station in Elora, Ontario, Canada, for the 3 April to 11 April 1985 recording period. All other input parameters reflect typical spring snowmelt conditions for a watershed in southwestern Ontario (Schroeter 1989). Specific programming instructions for the objects in each sector are further described beginning with the next section.

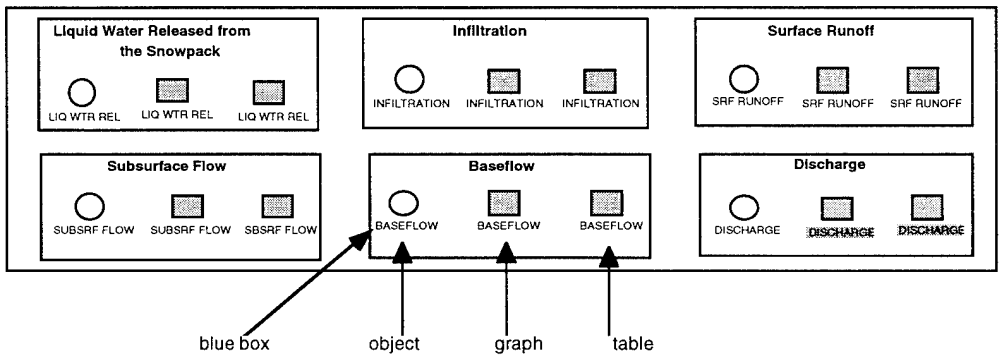

Figure 5. OUTPUTS sector. This sector is used to examine the major outputs from Object-GASWER. A box exists for every major output. Each box contains the object which calculates the output, a graph showing the behavior of the output, and a table showing the hourly numeric value of the output.

OUTPUTS SECTOR

The major outputs from Object-GAWSER can be examined in a sector entitled OUTPUTS (see Fig. 5), which is located beneath the DATA INPUTS sector in the main object model. For every major output there exists a box that contains the object that calculates the output, a graph that shows the behavior of the output, and a table that shows the numeric value of the output for every time interval. Once the input parameters are programmed, one can run Object-GAWSER to view the following outputs in the OUTPUTS sector: the liquid water released from the snowpack (LIQ_WTR_REL), infiltration (INFILTRATION), surface runoff (SRF_RUNOFF), subsurface flow (SUBSURF_FLOW), baseflow (BASEFLOW), and discharge (DISCHARGE). For example, LIQ_WTR_REL can be examined in the box in the upper left-hand corner of the OUTPUTS sector entitled "Liquid Water Released from the Snowpack." Like objects, the contents of graphs and tables can be viewed by double-clicking on them. After double-clicking on the graph or table, a window will appear on the screen. Windows for graphs and tables are removed from the screen by clicking in the box in the upper left-hand corner of the window.

PROGRAMMING INSTRUCTIONS

This section describes how each input parameter in the DATA INPUTS sector should be programmed. Programming instructions for each input parameter are grouped according to each blue box in the DATA INPUTS sector. Sample values for each input parameter for a watershed in southwestern Ontario are listed in the Appendix.

General inputs

BARE (decimal) is the percentage of ground in the watershed not covered by snow. To simulate a

watershed that is completely snow-covered, enter a value of zero. To simulate a watershed with no snow cover, enter a value of one. To simulate a watershed with patchy snow cover, enter a value between zero and one.

DA (km^2) is the drainage area of the watershed. Values for DA can be derived from topographic maps or from a geographic information system (GIS).

EDAY (mm/day) is the constant daily evaporation rate. EDAY is used to calculate the amount of water evaporated off the watershed. Please note that EDAY is ignored by Object-GAWSER when any snow cover is present or when rain is falling.

FCS, FD, FDs, FIMC_I, FIMC_II, FKEFF, FKMF, FKO, FKSS, FRAIN, FSAV, FSNOW, and FTEMP are the adjustment factors described:

FCS adjusts the maximum seepage rate
FD adjusts the maximum percolation rate
FDs adjusts depression storage
FIMC_I adjusts the initial moisture content of the top layer of soil
FIMC_II adjusts the initial moisture content of the bottom layer of soil
FKEFF adjusts the hydraulic conductivity of the top layer of soil
FKMF adjusts the rate of melting and refreezing in the snowpack
FKO adjusts the rate of runoff
FKSS adjusts the rate of subsurface flow
FRAIN adjusts the rainfall rate, FSAV adjusts the rate of infiltration
FSNOW adjusts the snowfall rate, and FTEMP adjusts the air temperature.

Adjustment factors increase or dampen the effect of those hydrologic processes simulated by Object-GAWSER, because they adjust the values of the input parameters that govern the rates of the hydrologic processes. To increase the effect of a hydrologic process, the corresponding adjustment factor should be programmed with a value greater than one. To dampen the effect of a hydrologic process, the corresponding adjustment factor should be programmed with a value between zero and one. To maintain the current effect of the hydrologic process, the corresponding adjustment factor should be programmed with a value of one. For example, if you wanted to decrease the amount of seepage into the bottom soil layer by 80%, you would set FCS to 0.8. Table 1 shows the adjustment factor, the current value of the adjustment factor, and the input parameter whose set value is modified by the adjustment factor.

INIT_STOR (mm) is the initial amount of water in depression storage on the soil surface. INIT_STOR applies to all GROFF sectors except GROFF1, because GROFF1 simulates impervious surfaces (like paved areas) and GROFF2 –GROFF5 simulate pervious surfaces. To simulate a watershed with a dry soil surface, set INIT_STOR to zero. To simulate depression storage with some amount of existing water, set INIT_STOR greater than zero and less than the maximum depth of depression storage (DSs for GROFF2 and GROFF3 and DSs_2 for GROFF4 and GROFF5). If the value of INIT_STOR exceeds the value of maximum specified depth of depression storage, Object-GAWSER converts the excess water to runoff.

NZONE (unitless) determines the number of zones used to model a given watershed. Set NZONE equal to one to simulate a completely impervious watershed. If NZONE is set to one, PCT_1 must also

Table 1. Description of the adjustment factors.

Adjustment factor	*Adjustment factor value*	*Corresponding input parameter(s)*
FCS	1	CSs, CSs_2
FD	1	Ds, Ds_2
FDs	1	DS_IMPs, DSs, DSs_2
FIMC_I	1.6	IMC_Is, IMC_Is _2
FIMC_II	1	IMC_IIs, IMC_IIs_2
FKEFF	1	KEFFs, KEFFs 2
FKMF	0.5	KMs
FKO	1.5	KOs
FKSS	1	KSSs
FRAIN	1	RAINs
FSAV	1	SAVs
FSNOW	1	SNOWs
FTEMP	1	TEMPs

This table shows the adjustment factor, the current value of the adjustment factor, and the names of the objects whose values are modulated by the adjustment factor.

be set to one because PCT_1 represents the aerial fraction of zone 1 in the watershed (see Inputs for GROFF1). To simulate a watershed with impervious areas and one soil type, set NZONE to two. If NZONE equals two, the sum of PCT_1 and PCT_2 (the aerial fraction of zone 2 in the watershed, see *Inputs for GROFF2*) should equal one. To simulate a watershed with impervious areas and two soil types, set NZONE to three. If NZONE equals three, the sum of PCT_1, PCT_2, PCT_3, the aerial fraction of zone 3 in the watershed (see *Inputs of GROFF4*) should equal one.

RAINs (mm of water), rainfall on the watershed, is programmed differently than the other input parameters in that it contains a graphical function. RAINs should be programmed with hourly rainfall data. Instructions for programming graphical functions are located at the end of *Data Inputs Sector.*

Inputs for SNOMLT

"A" (1/°C) and "B"(h) are the compaction coefficients for the snowpack. Schroeter (1989) uses values of 0.1 and 96 for A and B respectively. A sensitivity analysis of the liquid water released from the snowpack (LIQ_WTR_REL, the main output from the SNOMLT sector) showed that Object-GAWSER is almost completely insensitive to changes in the values of A and B.

INIT_LWC (mm of water) is the initial liquid water content of the snowpack. If a sufficient period of below-freezing air temperatures precedes the simulation period, the snowpack is assumed to be completely frozen and this parameter should be set to zero. Otherwise, INIT_LWC can be set to a value that is greater than zero (Schroeter 1989).

ISDEP (mm of depth) is the initial snowpack depth. This value represents the average depth of the snowpack in the entire watershed. This parameter only needs to be programmed if the watershed is partly or completely covered by snow, because snow-free conditions are modeled by setting BARE (from the "GENERAL INPUTS" box) equal to one (when BARE is equal to one, the parameters in the SNOMLT sector are ignored by Object-GAWSER).

ISWC (mm of water) is the initial solid water content of the snowpack. Like ISDEP, this parameter only needs to be programmed if the watershed is partly or completely covered by snow.

MRHO (vol/vol) is the maximum dry density of the snowpack. MRHO usually occurs between 0.35 and 0.45 (Chard 1983, Schroeter 1988).

NEWDEN (vol/vol) is the relative density of newly fallen snow. NEWDEN occurs between 0.02 and 0.15, but usually occurs at a density of 0.1 (Schroeter 1989).

SNOWs (mm of depth) is the fluffy new snow that lands on the existing snowpack. SNOWs should be programmed with hourly snowfall data. SNOWs is programmed similarly to RAINs from the "GENERAL INPUTS" box because it is also programmed using a graphical function.

SWI (decimal) is the maximum fraction of pore space in the snowpack available to store liquid water. SWI is commonly found to be 0.07 (Chard 1983).

TEMPs (°C) is the air temperature and is programmed like RAINs in the "GENERAL INPUTS" box. TEMPs should be programmed with hourly temperature data.

Inputs for GROFF1

DS_IMPs (mm) is the maximum depth of depression storage for impervious areas. To simulate ponding in large impervious areas like parking lots, set DS_IMPs to 0.5 (Schroeter 1989). If no ponding occurs on the impervious areas, set DS_IMPs to zero.

INIT_IMP_STOR (mm) is the initial amount of water in depression storage on impervious surfaces. To simulate a dry impervious surface, set INIT_IMP_STOR to zero. To simulate an impervious surface whose depression storage is completely filled with water, set INIT_IMP_STOR equal to DS_IMPs. To simulate a pervious surface in which depression storage is partially filled, assign INIT_IMP_STOR a value between zero and the value of DS_IMPs. If INIT_IMP_STOR is greater than DS_IMPs, Object-GAWSER will convert the amount by which INIT_IMP_STOR exceeds DS_IMPs to runoff.

PCT_1 (decimal) is the aerial fraction of zone 1 in the watershed. Remember, zone 1 is the imper-

vious portion of the watershed and is simulated entirely by GROFF1. Highly developed watersheds are simulated by setting PCT_1 close to one. Undeveloped watersheds are simulated by setting PCT_1 close to zero. Because all watersheds contain streams, PCT_1 should not be set to zero because Object-GAWSER characterizes stream beds as impervious surfaces. Make sure that the sum of PCT_1, PCT_2 (from GROFF2), and PCT_3 (from GROFF4) equals one.

Inputs for GROFF2

Before the inputs for GROFF2 are discussed, please recall that GROFF2 and GROFF3 are used to simulate zone 2 which consists of one soil type. Please also recall that GROFF2 simulates that water from zone 2 that goes to subsurface storage and that GROFF3 simulates that water from zone 2 that goes to groundwater storage. Therefore, GROFF2 and GROFF3 share those inputs which represent the soil characteristics of zone 2 except those inputs that determine whether the water from the bottom soil layer goes to subsurface or groundwater storage. Therefore, GROFF3 uses the value of every input parameter for GROFF2 except FATR and H_II.

CSs (mm/h) is the maximum seepage rate for zone 2. Values for CSs can be derived from field measurements or from the literature (Mein and Larson 1973, Ghate and Whiteley 1982, Haan et al. 1982, Schroeter 1989). Relatively large values for CSs should be used to simulate relatively quick seepage of water from the top to the bottom soil layer and vice versa.

Ds (mm/h) is the maximum percolation rate for zone 2. Values for Ds can be derived from field measurements or from the literature (Mein and Larson 1973, Haan et al. 1982, Ghate and Whiteley 1982, Schroeter 1989). Relatively large values for Ds should be used to simulate relatively quick percolation of water from the bottom soil layer into subsurface and groundwater storage and vice versa.

DSs (mm) is the maximum depth of depression storage on the soil surface for zone 2. DSs should have a relatively large value to minimize runoff and maximize subsurface flow and baseflow. DSs should have a relatively small value to maximize runoff and minimize subsurface flow and baseflow.

FATR (decimal) is the percentage of zone 2 simulated by GROFF2. This parameter determines the amount of water in zone 2 that will percolate into subsurface storage. To route all water from zone 2 to subsurface storage, set FATR to one. To prevent any water from entering subsurface storage, set FATR to zero. Please note that the sum of FATR and FATR_2 (from GROFF3) does not have to equal one.

FCAP_I (mm) is the field capacity soil water content for the top layer of soil for zone 2. Relatively high values of FCAP_I will simulate soils capable of storing larger amounts of water and vice versa. For Object-GAWSER to accurately simulate gravity drainage of water, FCAP_I must be less than SMC_I (saturated moisture content of the soil, which is discussed later in this section).

H_I (mm) is the thickness of the top soil layer in zone 2. To simulate a thick upper soil layer with a large amount of soil water storage, assign H_I a relatively large value. To simulate a thin upper soil layer with a small amount of soil water storage, assign H_I a relatively small value.

H_II (mm) is the thickness of the bottom soil layer for the portion of zone 2 simulated by GROFF2. Because GROFF2 simulates the flow of water to subsurface storage, H_II should be assigned a relatively small thickness. If GROFF2 simulated the flow of water to groundwater storage (like GROFF3 and GROFF5), H_II would be assigned a relatively large thickness. Therefore, the value of H_II includes an implicit third layer of subsurface storage.

IMC_Is (vol/vol) is the initial moisture content for the top layer of soil in zone 2. To simulate a top layer of soil that is saturated, set IMC_Is equal to the saturated moisture content of the upper soil layer (SMC_I, which is discussed later in this section). To simulate a top soil layer that is dry, set IMC_Is is equal to the wilting point of the upper soil layer (WILT_I , which is discussed later in this section). Do not assign IMC_Is a value greater than SMC_I or less than WILT_I.

IMC_IIs (vol/vol) is the initial moisture content for the bottom soil layer in zone 2. To simulate a bottom soil layer that is saturated, set IMC_IIs equal to the saturated moisture content of the bottom

soil layer (SMC_II, which is described later in this section). To simulate a bottom soil layer that is dry, set IMC_IIs equal to the wilting point of the bottom soil layer (WILT_II, which will be discussed later in this section). Do not assign IMC_IIs a value greater than SMC_II or less than WILT_II.

KEFFs (mm/hr) is the effective hydraulic conductivity of the top soil layer in zone 2. High values of KEFFs simulate high permeability soils and low values of KEFFs simulate low permeability soils. Zone 2 can be changed to an impervious area (like zone 1) by setting KEFFs to zero.

PCT_2 (decimal) is the aerial fraction of zone 2 in the watershed. Set PCT_2 to one to model the entire watershed with zone 2. Set PCT_2 to zero if zone 2 does not represent any part of the watershed. Finally, if zone 2 represents only part of the watershed, set PCT_2 to a value between zero and one which represents the percentage of the watershed represented by zone 2. Make sure the sum of PCT_1, PCT_2, and PCT_3 (from GROFF4) equals one.

SAVs (mm) is the average suction at the wetting front in the top soil layer of zone 2. Larger values of SAVs are associated with larger amounts of infiltration into the top layer of soil and vice-versa.

SMC_I (vol/vol) is the saturated soil water content for the top layer of soil in zone 2. To simulate a large storage capacity in the top layer of soil, assign SMC_I a relatively large value. To simulate a small storage capacity in the upper soil layer, assign SMC_I a relatively small value.

SMC_II (vol/vol) is the saturated moisture content for the bottom soil layer in zone 2. To simulate a large storage capacity in the bottom soil layer, assign SMC_II a relatively large value. To simulate a small storage capacity in the bottom soil layer, assign SMC_II a relatively small value.

WILT_I (mm) is the wilting point for the top layer of soil in zone 2. WILT_I differs from SMC_II in that relatively small values of WILT_I are used to simulate a large storage capacity in the top layer of soil and relatively large values of WILT_I are used to simulate a small storage capacity in the top layer of soil.

WILT_II (mm) is the wilting point soil-water content for the bottom soil layer in zone 2. Like WILT_I, small values of WILT_II simulate large amounts of storage in the bottom soil layer and large values of WILT_II simulate small amounts of storage in the bottom soil layer.

Inputs for GROFF3

GROFF3 contains less programmable objects than GROFF2 because GROFF3 uses the values of all the input parameters from GROFF2 except FATR and H_II. Therefore, duplicates of the objects representing the input parameters shared by GROFF2 and GROFF3 exist in GROFF3.

FATR_2 (decimal) is the percentage of zone 2 simulated by GROFF3. This parameter determines the amount of water in zone 2 that will percolate into groundwater storage. To route all water from zone 2 to groundwater storage, set FATR_2 to one. To prevent any water from zone 2 from entering groundwater storage, set FATR_2 to zero. Please note that the sum of FATR and FATR_2 (from GROFF3) does not have to equal one.

H_II_2 (mm) is the thickness of the bottom soil layer for the portion of zone 2 simulated by GROFF3. Because GROFF3 simulates the flow of water to groundwater storage, H_II should be assigned a relatively large thickness. Therefore, the value of H_II includes an implicit layer of groundwater storage.

Inputs for GROFF4

Before discussing the inputs for GROFF4, please recall that GROFF4 and GROFF5 are used to simulate zone 3, which consists of one soil type. Please also recall that GROFF4 simulates that water from zone 3 that goes to subsurface storage and that GROFF5 simulates that water from zone 3 that goes to groundwater storage. Therefore, GROFF4 and GROFF5 share those inputs which represent the soil characteristics of zone 3 except those inputs that determine whether the water from the bottom soil layer goes to subsurface or groundwater storage. Therefore, GROFF5 uses the value of every input parameter for GROFF4 except FATR_3 and H_II_3.

CSs_2 (mm/h) is the maximum seepage rate for zone 3. Values for CSs_2 can be derived from field measurements or from the literature (Mein and Larson 1973, Ghate and Whiteley 1982, Haan et

al. 1982, Schroeter 1989). Relatively large values for CSs_2 should be used to simulate relatively quick seepage of water from the top soil layer to the bottom soil layer and vice versa.

Ds_2 (mm/h) is the maximum percolation rate for zone 3. Values for Ds_2 can be derived from field measurements or from the literature (Mein and Larson 1973, Haan et al. 1982, Ghate and Whiteley 1982, Schroeter 1989). Relatively large values for Ds_2 should be used to simulate relatively quick percolation of water from the bottom soil layer into subsurface and groundwater storage and vice versa.

DSs_2 (mm) is the maximum depth of depression storage on the soil surface for zone 3. DSs_2 should have a relatively large value to minimize runoff and maximize subsurface flow and baseflow. DSs_2 should have a relatively small value to maximize runoff and minimize subsurface flow and baseflow.

FATR_3 (decimal) is the percentage of zone 3 simulated by GROFF4. This parameter determines the amount of water in zone 3 that will percolate into subsurface storage. To route all water from zone 3 to subsurface storage, set FATR_3 to one. To prevent any water from entering subsurface storage in zone 3, set FATR_3 to zero. Please note that the sum of FATR_3 and FATR_4 (from GROFF5) does not have to equal one.

FCAP_I_2 (mm) is the field capacity soil water content for the top layer of soil for zone 3. Relatively high values of FCAP_I_2 simulate soils capable of storing large amounts of water and vice versa. For Object-GAWSER to accurately simulate gravity drainage of water, FCAP_I_2 must be less than SMC_I_2 (saturated moisture content of the top soil layer in zone 3, which is discussed later in this section).

H_I_2 (mm) is the thickness of the top soil layer in zone 3. To simulate a thick top soil layer with a large amount of soil water storage, assign H_I 2 a relatively large value. To simulate a thin top layer of soil with a small amount of soil water storage, assign H_I_2 a relatively small value.

H_II_3 (mm) is the thickness of the bottom soil layer for the portion of zone 3 simulated by GROFF4. Because GROFF4 simulates the flow of water to subsurface storage, H_II_3 should be assigned a relatively small thickness. Therefore, the relatively small value of H_II_2 includes an implicit third layer of subsurface storage.

IMC_Is_2 (vol/vol) is the initial moisture content for the top layer of soil in zone 3. To simulate a top layer of soil that is saturated, set IMC_Is_2 equal to the saturated moisture content of the top soil layer of zone 3 (SMC_I_2 which is discussed later in this section). To simulate a dry top layer of soil, set IMS_Is_2 equal to the wilting point of the top layer of soil of zone 3 (WILT_I_2 which is also discussed later in this section). Do not assign IMC_Is_2 a value greater than SMC_I_2 or less than WILT_I_2.

IMC_IIs_2 (vol/vol) is the initial moisture content for the bottom layer of soil in zone 3. To simulate a saturated bottom soil layer, set IMC_IIs_2 equal to the saturated moisture content of the bottom soil layer of zone 3 (SMC_II_2 which is described later in this section). To simulate a dry bottom soil layer, set IMC_IIs_2 equal to the wilting point of the bottom soil layer of zone 3 (WILT_II_2, which is also described later in this section). Do not assign IMC_IIs_2 a value greater than SMC_II_2 or less than WILT_II_2.

KEFFs_2 (mm/hr) is the effective hydraulic conductivity of the top soil layer in zone 3. High values of KEFFs_2 simulate high permeability soils and low values of KEFFs_2 simulate low permeability soils. Zone 3 can be changed to an impervious area (like zone 1) by setting KEFFs_2 to zero.

PCT_3 (decimal) is the aerial fraction of zone 3 in the watershed. Set PCT_3 to one to model the entire watershed with zone 3. Set PCT_3 to zero if zone 3 does not represent any part of the watershed. Finally, if zone 3 represents only part of the watershed, set PCT_3 to a value between zero and one which represents the percentage of the watershed represented by zone 3. Make sure that the sum of PCT_1, PCT_2, and PCT_3 equals one.

SAVs_2 (mm) is the average suction at the wetting front in the top layer of soil of zone 3. Larger

values of SAVs_2 are associated with larger amounts of infiltration into the top layer of soil and vice versa.

SMC_I_2 (vol/vol) is the saturated soil water constant for the top layer of soil in zone 3. To simulate a large storage capacity in the upper soil layer, assign SMC_I_2 a relatively large value. To simulate a small storage capacity in the upper soil layer, assign SMC_I_2 a relatively small value.

SMC_II_2 (vol/vol) is the saturated moisture content for the bottom soil layer in zone 3. To simulate a large storage capacity in the bottom soil layer, assign SMC_II_2 a relatively large value. To simulate a small storage capacity in the bottom soil layer, assign SMC_II_2 a relatively small value.

WILT_I_2 (mm) is the wilting point soil-water content for the top layer of soil in zone 3. WILT_I_2 differs from SMC_II_2 in that relatively small values of WILT_I_2 are used to simulate a large storage capacity in the top soil layer and relatively large values of WILT_I_2 are used to simulate a small storage capacity in the top layer of soil.

WILT_II_2 (mm) is the wilting point soil-water content for the bottom soil layer in zone 3. Like WILT_I_2, small values of WILT_II_2 simulate large a large amount of storage in the bottom soil layer and large values of WILT_II_2 simulate small a small amount of storage in the bottom soil layer.

Inputs for GROFF5

GROFF5 contains less programmable inputs than GROFF4 (just as GROFF3 contains less programmable objects than GROFF2) because GROFF5 uses the values of all the input parameters from GROFF4 except FATR_3 and H_II_3. Therefore, duplicates of the objects representing the input parameters shared by GROFF4 and GROFF5 exist in GROFF5.

FATR_4 (decimal) is the percentage of zone 3 simulated by GROFF5. This parameter determines the amount of water in zone 3 that will percolate into groundwater storage. To route all water from zone 3 to groundwater storage, set FATR_4 to one. To prevent any water from zone 3 from entering groundwater storage, set FATR_4 to zero. Please note that the sum of FATR_3 (from GROFF4) and FATR_4 must equal to one. Therefore, if FATR_3 is 0.5, FATR_4 must be 0.5.

H_II_4 (mm) is the thickness of the bottom soil layer for the portion of zone 3 simulated by GROFF5. Because GROFF5 simulates the flow of water to groundwater storage, H_II_4 is assigned a relatively large thickness.

Input for SBS_STOR_&_FLOW_1 and SBS_STOR_&_FLOW_2

Both SBS_STOR_&_FLOW_1 and SBS_STOR_&_FLOW_2 share one input parameter, KSSs (h) which is the subsurface flow recession constant. This object determines the average amount of time needed for a molecule of water to travel through the watershed as subsurface flow. A value of 5 hours was found to be appropriate for southwestern Ontario (Schroeter 1989).

Input for GDWTR_STOR_&_BASFLW_1 and GDWTR_STOR_&_BASFLW_2

Both GDWTR_STOR_&_BASFLW_1 and GDWTR_STOR_&_BASFLW_2 share the same input, KGW (h) which is the groundwater recession constant. This object determines the average amount of time it takes for a molecule of water to travel through the watershed as baseflow. Schroeter (1989) found KGW to be in the range of 384 to 576 hours for southwestern Ontario.

Inputs for SRFRNF

KOs (hours) is the overland linear reservoir lag. This parameter is used in conjunction with TLO (which is described later in this section) to simulate the average amount of time for a molecule of water to travel as runoff to the watershed outlet. This time is usually twice the base time (TB), which is described later in this section (Schroeter 1989).

KO_SWITCH is the overland linear reservoir lag switch. If the value of KOs is known, enter one. If the value of KOs is not known, enter zero and Object-GAWSER will estimate KOs.

TLO (h) is the overland linear channel lag. TLO is used in conjunction with KOs to simulate the average amount of time for a molecule of water to travel as runoff to the watershed outlet.

TMC (h) is the main channel travel time or the average amount of time for a molecule of water to travel down the main channel of a watershed.

TOC (h) is the off-channel travel time or the average amount of time for a molecule of water to travel down the smaller side channels that run into the main channel.

Inputs for CHNLRTNG

K (h) is the linear reservoir lag from the Muskingum technique. Viessman et al. (1977) describes how K is determined.

X (unitless) is the Muskingum wedge storage weighting coefficient. Viessman et al. (1977) also describes how X is determined.

QB (m^2/s) is initial baseflow in the watershed. In the absence of subsurface flow (when a rainfall event has not occurred in the last few days), QB is equal to the initial discharge from the watershed outlet. When subsurface flow is present, QB is equal to the initial discharge from the watershed outlet minus subsurface flow.

QSS (m^3/s) is the initial subsurface flow in the watershed. If the simulation period begins a few days after a significant rainfall, set QSS to zero. If the simulation period begins after a significant rainfall event, QSS is equal to the initial discharge from the watershed outlet minus QB.

EXAMPLE SIMULATIONS

Now that you are familiar with the input parameters of Object-GAWSER, the following simulations will demonstrate some basic programming strategies. This section will show how Object-GAWSER can be used to simulate the behavior of a fictitious forested, agricultural, and suburban watershed. The hydrologic behavior among these three watersheds was varied by changing the values of the input parameters that regulate depression storage, hydraulic conductivity, the amount of impervious area, and the amount of pervious area in the watershed. Table 2 shows these input parameters and their corresponding values for each simulation. Remember that DS_IMPs, DSs, and DSs_2 determine the amount of depression storage for zones 1, 2, and 3, respectively. KEFFs and KEFFs_2 determine the permeability of the soil in zones 2 and 3, respectively. PCT_1 determines the area of zone 1 (which represents the amount of impervious area in the watershed), and PCT_2 and PCT_3 determine area of zones 2 and 3 (which represent the amount of pervious area in the watershed). All other input parameters are representative of a completely snow-covered watershed in southwestern Ontario in early April (Schroeter 1989).

Table 2. Description of the input parameters used to generate the three simulations.

Input parameter	*Simulations*		
	Forested	*Agricultural*	*Suburban*
DS_IMPs	0.00	0.00	0.50
DSs	2.50	0.00	0.00
DSs_2	7.50	5.00	2.50
KEFFs	4.00	2.00	1.00
KEFFs_2	12.00	6.00	3.00
PCT_1	0.05	0.10	0.20
PCT_2	0.35	0.25	0.40
PCT_3	0.60	0.65	0.40

This table shows the values of eight input parameters for three different simulators.

Forested watershed simulation

This watershed was assigned a large value of depression storage to account for the large amount of depressions found in forest floors that have not been mechanically smoothed for development. Please note that DS_IMPs (the depression storage for impervious surfaces) was assigned a value of zero because this watershed was assumed not to contain large impervious surfaces (like large parking lots) in which water ponds. The forested watershed was also assigned the largest values for hydraulic conductivity because of the presence of extensive root systems that increase the permeability of forest soils (Walt 1989, Schroeter 1995*). Finally, this watershed was assigned the least amount of

* Personal communication with H. Schroeter, Schroeter and Associates, 1995.

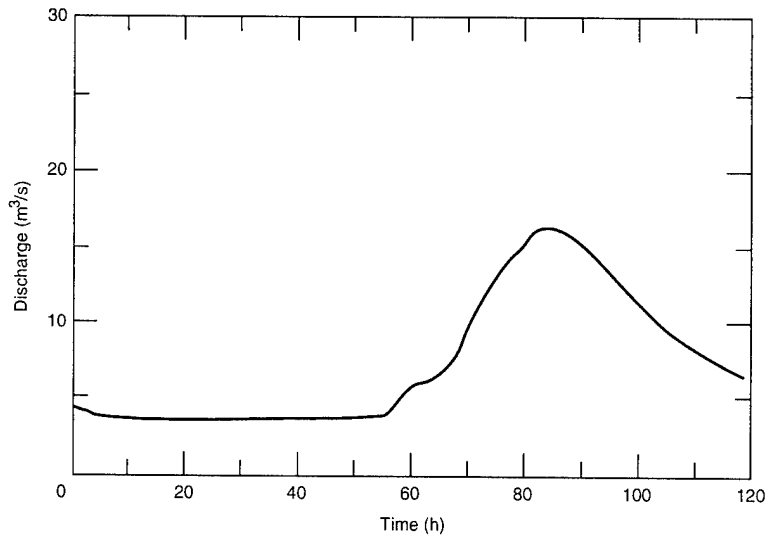

Figure 6. Discharge from a forested watershed. The discharge begins to increase more quickly at 51 hours, peaks at 85 hours at 16.34 m^3/s, then decreases until the end of the simulation. Please note that the discharge from the forested watershed differs from the discharge from agricultural and suburban watersheds shown in Figures 7 and 8.

impervious area and the most amount of pervious area because forested watersheds are least developed of all watersheds.

Figure 6 shows the discharge from the forested watershed. The discharge begins to increase more quickly at 51 hours, reaches a maximum of 16.34 m^3/s at 85 hours, and then descends to the end of the simulation.

Agricultural watershed simulation

The agricultural watershed was assigned less depression storage than the forested watershed because the surfaces of agricultural watersheds are mechanically smoothed to grow crops. Furthermore the agricultural watershed was assigned more depression storage than the suburban watershed because rows of depression storage are created by the plowing of agricultural fields. Like the forested watershed, the impervious part of the agricultural watershed was assigned a value of zero for depression storage. The agricultural watershed was assigned a smaller value of hydraulic conductivity than the forested watershed, because agricultural watersheds lack the extensive root systems present in forested watersheds. Finally, the agricultural watershed was assigned more impervious area than the forested watershed, because agricultural watersheds are more developed than the forested watersheds.

Figure 7 shows the discharge from the agricultural watershed. The discharge begins to increase more quickly at 50 hours, reaches a maximum of 23.41 m^3/s at 84 hours, and decreases until the end of the simulation. Please note that the peak of this hydrograph is larger and occurs one hour earlier than the peak of the hydrograph in Figure 6. The hydrographs in Figures 6 and 7 differ because the agricultural watershed infiltrates less water than the forested watershed, and it consequently produces more runoff and less subsurface and base flow than the forested watershed (larger amounts of runoff and smaller amounts of subsurface and base flow result in larger values of peak discharge and shorter times to peak discharge).

Suburban watershed simulation

The suburban watershed was assigned the least amount of depression storage of all the watersheds, because most surfaces in suburban watersheds are either paved or mechanically smoothed.

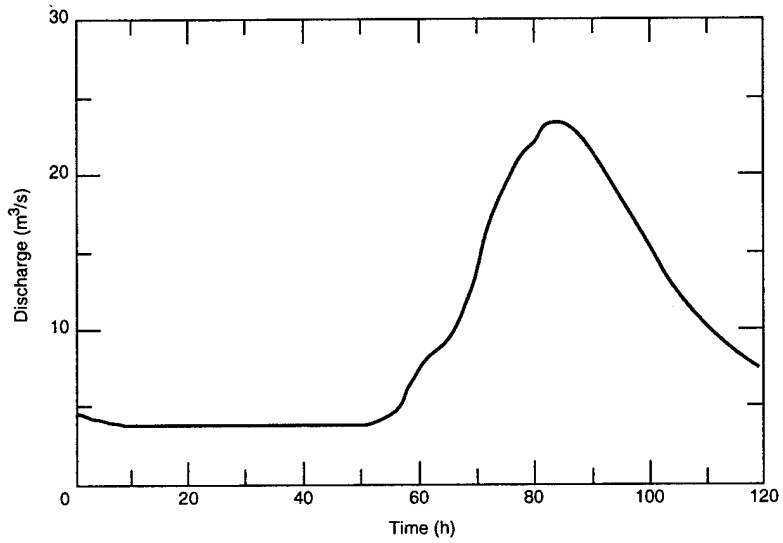

Figure 7. Discharge from an agricultural watershed. The discharge begins to increase more rapidly at 50 hours, peaks at 84 hours at 23.41 m^3/s, then decreases until the end of the simulation. This discharge hydrograph increases and decreases more rapidly, has a larger peak, and peaks one hour earlier than the discharge hydrograph for the forested watershed. The discharge shown in this figure and Figure 6 differ because the agricultural watershed produces more runoff and less subsurface and base flow than the forested watershed.

The impervious part of the suburban watershed was assigned a depression storage of 0.5 mm, because suburban watersheds usually contain large impervious surfaces (like parking lots) in which water ponds. This watershed was assigned the smallest values of hydraulic conductivity for all three watersheds, because the suburban soils were assumed to be the most compacted and therefore less permeable than both the agricultural and forested soils. Finally, the suburban watershed was assigned the most impervious area of all three watershed types, because suburban watersheds are more developed than forested or agricultural watersheds.

Figure 8 shows the behavior of the discharge from a suburban watershed. This hydrograph begins

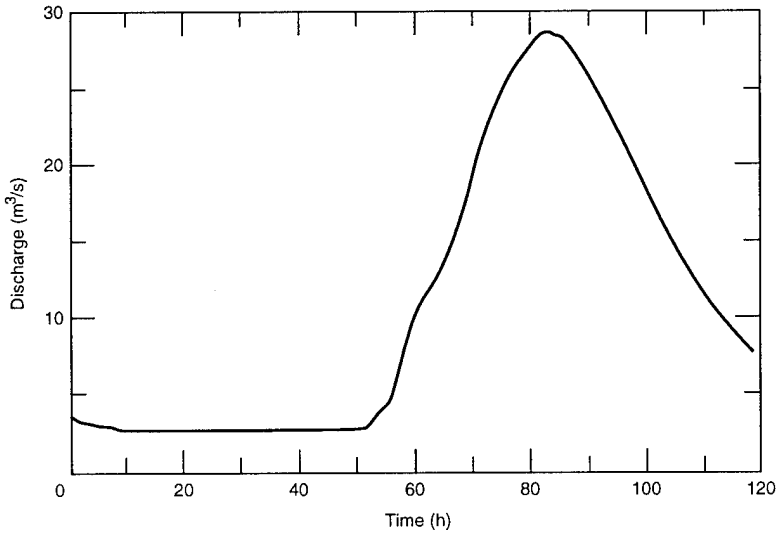

Figure 8. Discharge from a suburban watershed. The discharge begins to increase more rapidly at 50 hours, peaks at 84 hours at 28.63 m^3/s, and then descends until the end of the simulation. This hydrograph increases and decreases more rapidly and has a larger peak discharge than the hydrograph for the agricultural watershed because the suburban watershed produces more runoff and less subsurface flow and baseflow than the agricultural watershed.

to increase more rapidly at 50 hours, reaches a maximum of 28.63 m^3/s at 84 hours, and then decreases until the end of the simulation. The peak of this hydrograph is larger than the peak of the hydrograph in Figure 7. The hydrographs in Figures 7 and 8 differ because the suburban watershed infiltrates less water than the agricultural watershed and consequently produces more runoff and less subsurface and baseflow than the forested watershed.

TECHNICAL DESCRIPTION OF SNOMLT

SNOMLT is the sector in Object-GAWSER that calculates the average snow depth in a watershed. SNOMLT is further subdivided into a "Hydrology" section and a "Density / Depth" section. The Hydrology section calculates the water budget for the snowpack and the Density/Depth section calculates the density and depth of the snowpack. The inputs to SNOMLT are rain, snow, and air temperature. The outputs from SNOMLT are sublimation and meltwater.

Hydrology section

The Hydrology section calculates the water budget for the snowpack by tracking the solid and liquid water content of the snowpack. To calculate the water budget, the Hydrology section considers the melting, refreezing, sublimation, snowfall and rainfall associated with snowpack. In addition, the Hydrology section calculates the liquid water released from snowpack when the liquid water content of the snowpack exceeds the liquid water holding capacity of the snowpack.

Table 3. Variables and initial conditions for the hydrology sector.

Variable	*Description*	*Initial condition*	*Units*
EXCESS_LWC	excess liquid water	0	mm of H_2O
HOURS	time interval	0	h
KF	the refreeze factor	0.21	mm/h-°C
KMa	the adjusted melt factor	0.21	mm/h-°C
LWC	liquid water content of snowpack	0	mm of H_2O
LWCAP	liquid water holding capacity of snowpack	12.68	mm of H_2O
MELTP	potential melt	0	mm of water
POR	porosity of snowpack	0.78	vol/vol
RAINs	rain	0	mm of H_2O/h
RAIN_IN _I	original rain input	0	mm of H_2O/h
RAIN_IN_II	alternative rain input	0	mm of H_2O/h
REFREZ	refrozen liquid water	0	mm of H_20/h
REFREZP	potential refreeze	0.08	mm of H_2O/h
SNOWs	new snow	0	mm of depth/h
SNOWE	solid water content of new snow	0	mm of H_2O/h
SUBLM	actual rate of sublimation	0	mm of H_2O/h
SWC	solid water content of snowpack	46.8	mm of water
TBAS	temperature of the snowpack	0	°C
TEMPs	air temperature	–4.01	°C
TEMPSWITCH	temperature switch	0	°C
TOT_LIQ_WTR_REL	total liquid water released from the snowpack	0	mm of H_2O

The name, brief description, initial conditions, and the units of each variable in the Hydrology section are shown in Table 3. The initial conditions for all the variables within the Hydrology section except EXCESS_LWC, MELT_I, MELT_II, REFREZ, RAIN_IN_I, RAIN_IN_II, SNOWE, SUBLM, and TOT_LIQ_WTR_REL were taken from a technical memorandum prepared by H. Schroeter.* TOT_LIQ_WTR_REL is initially set to zero because it considers liquid water that has not yet been generated by Object-GAWSER. EXCESS_LWC, MELT_I, MELT_II, RAIN_IN_I, and

* Personal communication with H. Schroeter, Schroeter and Associates, 1995.

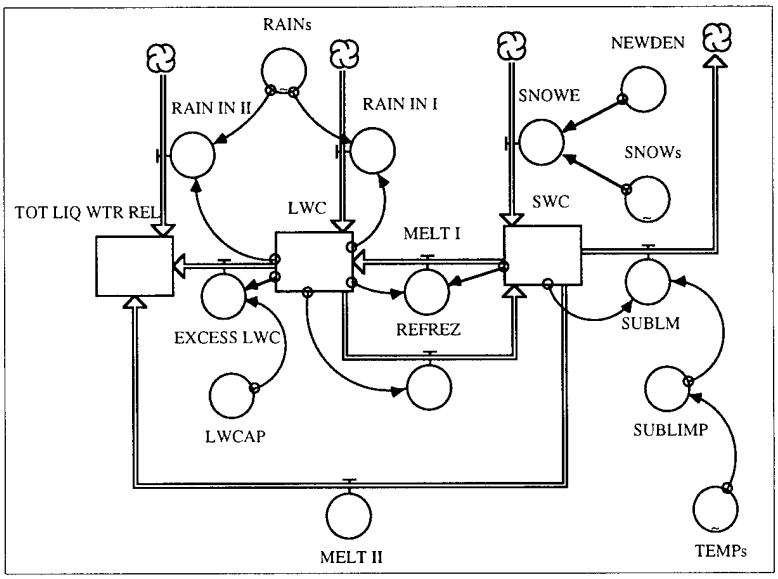

Figure 9. The "Basic Hydrology section." For simplification, only the main elements of the Hydrology section are shown. This section calculates the water budget for the snowpack and therefore simulates snowfall, rainfall, sublimation, snowmelt, refreeze of liquid water, and the liquid water released from the snowpack. Snowfall is simulated with NEWDEN, SNOWs, and SNOWE. Rain is simulated with RAINs, RAIN_IN_I and RAIN_IN_II. Sublimation is simulated with SUBLIM and SUBLIMP. Snowmelt is simulated with MELT_I and MELT_II. Refreeze of liquid water is simulated with REFREZ. Liquid water released from the snowpack is simulated with EXCESS_LWC, TOT_LIQ_WTR_REL, RAIN_IN_II, and MELT_II.

RAIN_IN_II are initially zero because TEMPs is below zero. REFREZ is zero because there is no liquid water in the snowpack to be refrozen. SNOWE is zero because no snow has fallen. Finally, SUBLM is set to zero as its value in the original GAWSER model is zero.

The Hydrology section is shown in Figure 9. (For simplification, only the main elements of the Hydrology section are shown in Figure 9 as the "Basic Hydrology section.") KF, KMa, MELTP, TBAS, and TEMPSWITCH from Table 3 are not shown in Figure 9, but are clustered together at the bottom of the Hydrology section in the main object model (these objects are shown in Fig. 10).

The following equations calculate LWC, SWC, and TOT_LIQ_WTR_REL in the Hydrology section for every time interval:

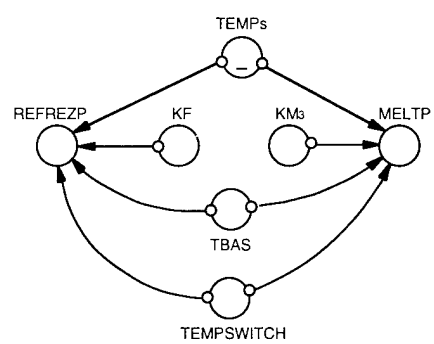

Figure 10. Object-code required to better simulate melting and refreezing. For simplification, only the main objects which calculate melting and refreezing in the snowpack are shown. For further simplification, TEMPs and TBAS were arranged differently here than they appear in the main object model. TEMPSWITCH, which contains the value of zero, was added to Object-GAWSER to better simulate melting and refreezing within the snowpack. When the value of TEMPs is greater than the value TEMPSWITCH, snowmelt occurs. When the value of TEMPs is less than TEMPSWITCH, refreezing of liquid water in the snowpack occurs. REFREZP and KF simulate refreezing of liquid water in the snowpack. KMa and MELTP simulate snowmelt. TBAS, TEMPs and TEMPSWITCH are used to simulate both refreezing of liquid water and snowmelt.

$$LWC_{t_1} = LWC_{t_0} + dt(MELT_I_{\Delta t} + RAIN_IN_I_{\Delta t} - REFREZ_{\Delta t} - EXCESS_LWC_{\Delta t}). \quad (1)$$

The differential time step used in the numerical integration is represented by *dt*. The subscripts are as follows:

t_1 = present time
t_0 = one *dt* in the past
Δt = the differential time step between period t_0 and t_1.

In eq 1 LWC_{t_1} is *the liquid water content* evaluated at the present time. LWC_{t_0} is a *the liquid water content* evaluated one *dt* in the past. $MELT_I_{\Delta t}$, $RAIN_IN_I_{\Delta t}$, $REFREZ_{\Delta t}$ and $LWC_OUT_{\Delta t}$ are *rates of mass movement* that influence LWC evaluated between t_0 and t_1. Hence, eq 1 states that the mass of liquid water in the snowpack at the present time (LWC_{t_1}) is equal to the mass of liquid water in the snowpack one *dt* in the past (LWC_{t_0}), plus the melting rate of solid ice ($MELT_I_{\Delta t}$)) and the rainfall rate ($RAIN_IN_I_{\Delta t}$) that occurred between the present time and one *dt* in the past, minus the refreezing rate of liquid water ($REFREZ_{\Delta t}$)) and the rate of excess liquid water removed from the snowpack ($EXCESS_LWC_{\Delta t}$)) that occurred between the present time and one *dt* in the past.

The value of LWC in eq 1 will increase with above freezing air temperatures accompanied by rain and snowmelt and decrease with below freezing temperatures accompanied by refreezing of liquid water. The value of SWC in eq 2 will increase with freezing air temperatures accompanied by snowfall and decrease with above freezing air temperatures accompanied by snowmelt and sublimation. The value of TOT_LIQ_WTR_REL in eq 3 will increase more rapidly with above freezing temperatures accompanied by rainfall and snowmelt:

$$SWC_{t_1} = SWC_{t_0} + dt(SNOWE_{\Delta t} + REFREZ_{\Delta t} - MELT_I_{\Delta t} - SUBLIM_{\Delta t}). \quad (2)$$

$$\begin{aligned} TOT\ LIQ_WTR_REL_{t_1} &= TOT\ LIQ_WTR_REL_{t_0} + \\ &\quad dt(EXCESS_LWC_{\Delta t} + RAIN_IN_II_{\Delta t} - MELT_II_{\Delta t}) \end{aligned} \quad (3)$$

SWC is incremented by SNOWE and REFREZ and decremented by MELT_I, MELT_II, and SUBLIM. SNOWE is the product of SNOW and NEWDEN. SWC is also decremented by SUBLIM only in subzero or rain-free conditions (eq 4). SUBLM contains the value of SUBLIMP because SUBLM and SUBLIMP are linked by a connector (Fig. 9).

If	TEMPs < 0	then	SUBLIMP = SUBLIM	
If	TEMPs > 0 OR RAINs>0	then	SUBLIMP = 0	(4)

EXCESS_LWC, MELT_II, and RAIN_IN_II increment TOT_LIQ_WTR_REL.

When LWC is greater than LWCAP, all of the excess liquid water is routed directly out of the snowpack via EXCESS_LWC. In Object-GAWSER, all excess liquid is accumulated within TOT_LIQ_WTR_REL. Excess liquid water is routed by eq 5 and 6 below.

When LWC is greater than LWCAP, Object-GAWSER follows the following procedure. First, EXCESS_LWC decrements LWC by the amount that LWC exceeds LWCAP. Second, LWC is no longer incremented by MELT_I and RAIN_IN_I to prevent LWC from further exceeding LWCAP; therefore, additional meltwater or rainwater is accounted for by incrementing TOT_LIQ_WTR_REL with MELT_II and RAIN_IN_II. Once LWC is less than or equal to LWCAP, RAIN_IN_II and MELT_II stop incrementing TOT_LIQ_WTR_REL and MELT_I and RAIN_IN_I begin incrementing LWC. Equations 5 and 6 are found within RAIN_IN_I, RAIN_IN_II, EXCESS_LWC, MELT_I, and MELT_II of Figure 9, respectively.

If LWC>LWCAP	then	EXCESS_LWC = LWC-LWCAP MELT_I = 0 MELT_II = MELTP RAIN_IN_I = 0 RAIN_IN_II = RAINs	(5)
Else		EXCESS_LWC = 0 MELT_I = MELTP MELT_II = 0 RAIN_IN_I = RAINs RAIN_IN_II = 0.	(6)

Equations 7–10 are ancillary to eq 1 and 2.* Equation 7 calculates the solid water content of new snow. The units of SNOWs are millimeters of depth/hour because the value of SNOWs for every time interval represents the amount of newly fallen snow per hour. Equation 8 is the product of SWI, POR, and SDEP. For simplification, SWI, POR, and SDEP do not appear in Figure 9. Equations 9 and 10 cause improper simulation of melting and refreezing. To better simulate melting and refreezing, eq 9 and 10 were revised as eq 11 and 12:

$$\text{SNOWE} = \text{SNOW} \times \text{NEWDEN} \tag{7}$$

$$\text{LWCAP} = \text{SWI} \times \text{POR} \times \text{SDEP} \tag{8}$$

If	TEMPs > TBAS	then	MELTP = KMa ×(TEMPs-TBAS)	
If	TEMPs <= TBAS	then	MELTP = 0	(9)
If	TEMPs < TBAS	then	REFREZP = KF×(TBAS-TEMPs)	
If	TEMPs > = TBAS	then	REFREZP = 0	(10)

For example, eq 9 and 10 say that: if the temperature of the air is greater than that of *the snowpack, then melting occurs; if the air temperature is less than or equal to that of the snowpack, freezing occurs*. Therefore, in this condition when the TEMPs is 0°C and TBAS is –1°C, the model will melt the solid ice when, in theory, any existing liquid water should be freezing. This flaw would be found within the code of MELTP and REFREZP within GAWSER. This problem is solved by using a temperature switch (Fig. 10) and setting the temperature of the snowpack (TBAS) to zero. The switch is a single converter with the value of 0°C for the entire simulation period. The logic statements within MELTP and REFREZP now use the value in TEMPSWITCH to determine whether melting or refreezing should occur. The code has been changed to:

If	TEMPs >TEMPSWITCH	then	MELTP = KMa ×(TEMPs–TBAS)	
If	TEMPs <=TEMPSWITCH	then	MELTP = 0	(11)
If	TEMPs < TEMPSWITCH	then	REFREZP = KF ×(TBAS–TEMPs)	(12)
If	TEMPs > = TEMPSWITCH	then	REFREZP = 0	

TEMPSWITCH would be useful should future development of Object-GAWSER require dynamic snowpack temperature data. Modeling multiple snowpack temperatures would be accomplished by entering hourly snowpack temperature information as a graphical function in TBAS.

*Equations 7–10 are equivalent to equations A.2, A.5, A.9, and A.13 respectively from the GAWSER manual.

Figure 10 shows the basic configuration of objects that prevent melting and refreezing malfunctions in Object-GAWSER. REFREZP and KF calculate the amount of liquid water in the snowpack that refreezes. KMa and MELTP calculate the amount of solid water in the snowpack that melts and becomes liquid water. TBAS, TEMPs, and TEMPSWITCH are used to simulate both refreezing of liquid water and the melting of solid water in the snowpack.

Density/Depth section

The Density/Depth section calculates the density and depth of the snowpack. The depth is calculated as a function of new snow additions, snowmelt and compaction. The density is calculated as a function of the snow depth and the solid water content of the snowpack. Every element in the Density/Depth section is shown Figure 11.

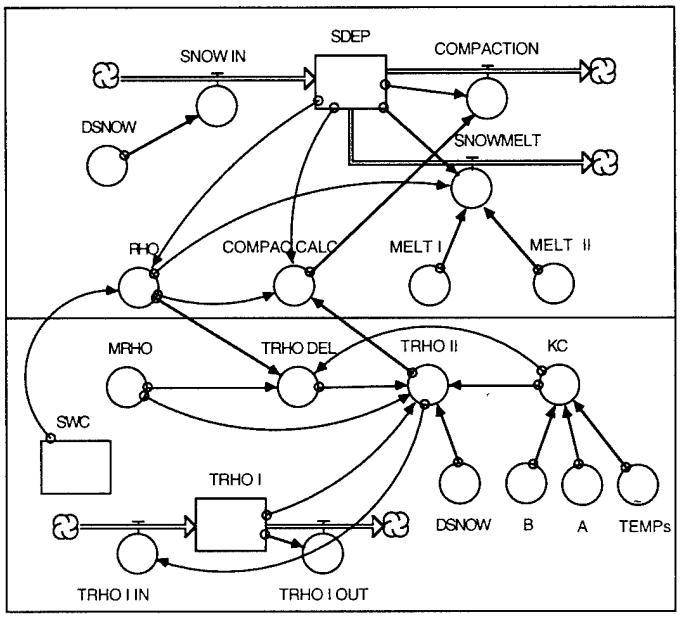

Figure 11. The Density/Depth section. This section is divided into two sections. The objects in the top half of the diagram are used to calculate the depth of the snowpack. The objects in the bottom half of the diagram calculate the density of the snowpack. RHO is used to calculate both the density and the depth of the snowpack. The dividing line between the top and bottom halves is used here for clarification and is not found in the actual object-model.

The depth of the snowpack is calculated by the objects in the top half to Figure 11. The density of the snowpack is calculated by the objects in the bottom half of Figure 11. RHO, which lies in the top half of Figure 11, is used to calculate both the density and the depth of the snowpack.

The initial conditions for all the variables within the Basic Density/Depth section except COMPACTION, COMPAC_CALC, KC, MELT_I, MELT_II, RHO, SNOW_IN, SNOWMELT, TRHO_II_IN, TRHO_II_ OUT, and TRHO_DEL are identical to those from a simulation prepared by Schroeter (1989). COMPACTION, SNOW_IN, SNOWMELT, TRHO_II_IN, are TRHO_II_OUT are initially zero because they are calculated at the end of every time interval. The name, a brief description, the initial condition, and the units of each variable featured in this section are listed in Table 4.

The following equations are used to calculate the depth of the snowpack. As shown in Figure 11, SDEP is incremented by SNOW_IN and decremented by COMPACTION and SNOWMELT. SNOW_IN uses the value in DSNOW, COMPACTION uses the value of COMPAC_ CALC, and SNOWMELT is the sum of MELT_I and MELT_II (from Fig. 9) divided by RHO:

Table 4. Variables and initial conditions for the Density/Depth section.

Variable	*Description*	*Initial condition*	*Units*
A	a coefficient	0.1	1/°C
B	a coefficient	4	h
DSNOW	adjusted snowfall	0	mm of depth/h
KC	compaction time constant	96	h
MELT_I	melted solid water when LWC <= LWCAP	0	mm of H_2O/h
MELT_II	melted solid water when LWC > LWCAP	0	mm of H_2O/h
MRHO	maximum dry density for snowpack	0.35	vol/vol
RHO	dry density of snowpack	0.202	vol/vol
SDEP	depth of snowpack	232	mm of depth
SNOWMELT	snowmelt	0	mm of depth
SWC	solid water content of snowpack	46.8	mm of H_2O
TEMP	air temperature	−0.4	°C
TRHO_I	first estimate of dry density in compaction	0.203	vol/vol
TRHO_II	second estimate of dry density in compaction	0.202	vol/vol
TRHO_DEL	TRHO delayed one dt	0.203	vol/vol
TRHO_II_IN	TRHO II input	0.203	(vol/vol)/h
TRHO_II_OUT	TRHO II output	0.203	(vol/vol)/h

$$\mathrm{SDEP}_{t_1} = \mathrm{SDEP}_{t_0} + dt\left(\mathrm{SNOW_IN}_{\Delta t} + \mathrm{COMPACTION}_{\Delta t} - \mathrm{SNOWMELT}_{\Delta t}\right) \tag{13}$$

where SNOW_IN = DSNOW (14)

COMPACTION = COMPAC_CALC (15)

SNOWMELT = (MELT_I + MELT_II) / RHO (16)

The following equations describe the methods by which density is calculated. To complete the numerical integrations, several objects, such as RHO, TRHO_DEL, TRHO_I and TRHO_II, were created to calculate density:*

$$\mathrm{RHO} = \mathrm{SWC/SDEP} \tag{17}$$

Equation 18 is a delayed density calculation since this equation calculates density one *dt* (time interval) later than eq 17, 19 and the first part of eq 20:

$$\mathrm{TRHO_DEL} = [\mathrm{RHO} \times \mathrm{MRHO}]/[\mathrm{RHO} + (\mathrm{MRHO} - \mathrm{RHO})\mathrm{EXP}(-1/\mathrm{KC})]_{t_0} \tag{18}$$

$$\mathrm{TRHO_I}_{t_1} = \mathrm{TRHO_I}_{t_0} + dt(\mathrm{TRHO_I_IN}_{\Delta t} + \mathrm{TRHO_I_OUT}_{\Delta t}) \tag{19}$$

If DSNOW = 0 then TRHO_II = [TRHO_I×MRHO]/[TRHO_I+(MRHO-TRHO_I) × EXP(−1/KC)]

If DSNOW > 0 then TRHO_II = TRHO_DEL (20)

$$\mathrm{KC} = \mathrm{B} \times \mathrm{EXP}(-\mathrm{A} \times \mathrm{TEMP}). \tag{21}$$

Equation 17 is used to calculate eq 18. Equation 19 is used to calculate eq 20 in the absence of snowfall, while eq 18 is used to calculate eq 23 during snowfall. Equation 21 is used by equations 18 and 20. Equations 17–21 are used to imitate the order of operations shown in Figure A.2 in the GAWSER manual.

* Equations 17 and 21 are equivalent to equations A.5 and A.11b in the GAWSER manual.

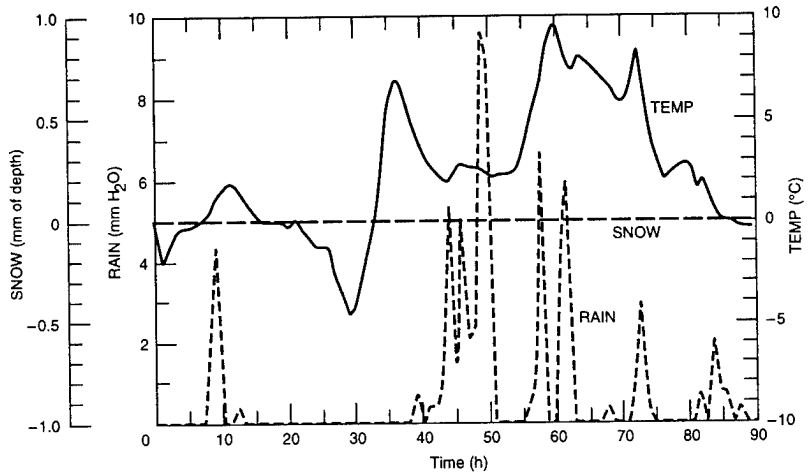

Figure 12. Behavior of model inputs. This figure shows the behavior of the meteorological inputs to Object-GAWSER. The inputs represent historic data taken from page 4-26 of the GAWSER manual (Schroeter 1989).

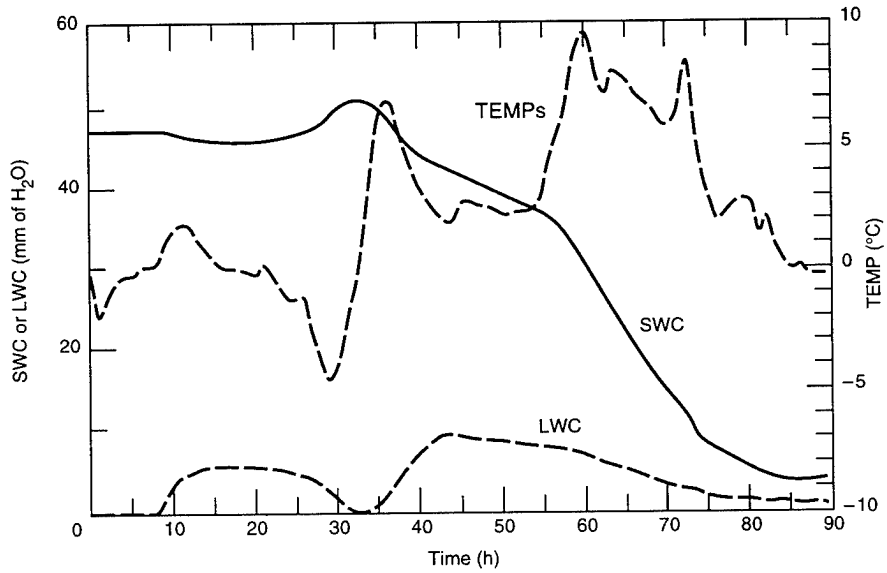

Figure 13. Behavior of SWC and LWC with respect to TEMPs. SWC remains constant or increases when TEMPs is less than zero and decreases when TEMPs is greater than zero. When TEMPs is less than zero from zero to 8 hours, SWC remains constant from zero to eight hours as there is no liquid water contained in the snowpack to increment SWC. From zero to 43 hours, LWC increases when TEMPs is greater than zero and decreases when TEMPs is less than zero. After 43 hours, LWC decreases when TEMPs is greater than zero because the liquid water holding capacity of the snowpack has been exceeded and liquid water is being released from the snowpack.

Graphical descriptions of SNOMLT

Figures 12–17 describe the behavior of the snowpack under the following conditions: the temperature of the pack (TBAS) is 0°C, no snowfall, periodic rain, and air temperatures fluctuating above and below freezing. Figure 12 demonstrates that TEMPs fluctuates about 0°C with a maximum near 10°C and a minimum near –5°C. The greatest fluctuation of TEMPs occurs at 30 hours and causes a significant decrease in SWC and a significant increase in LWC (Fig. 13). For simplification, SNOWs is not shown because snowfall is not simulated. Rain fluctuates with a maximum near 5 mm of H_2O/h and a minimum of 0 mm of H_2O/h.

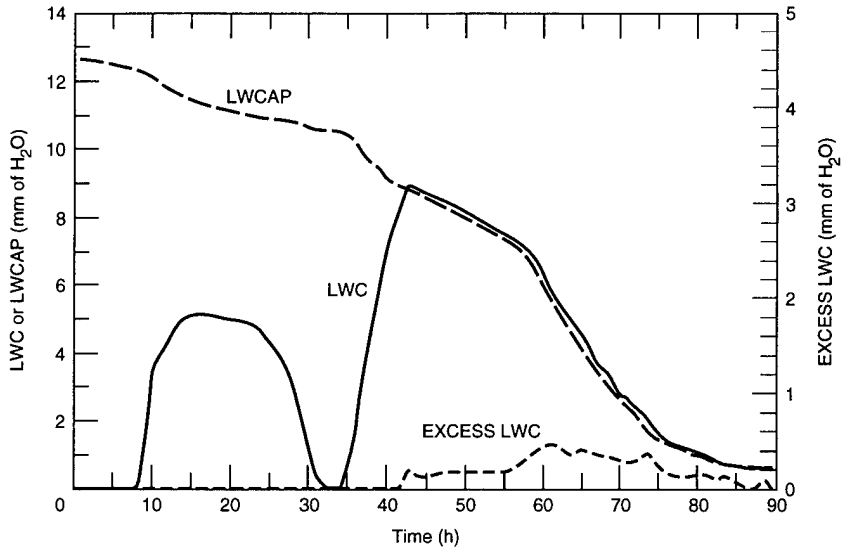

Figure 14. Behavior of EXCESS_LWC with respect to LWC and LWCAP. EXCESS_LWC begins at 43 hours when LWC exceeds LWCAP.

Figure 13 describes the behavior of LWC and SWC, with respect to TEMPs. SWC is constant from the beginning of the simulation until 8 hours, because TEMPs is below freezing and there is no liquid water in the snowpack that could freeze and increase the value of SWC. SWC decreases from 8 to 15 hours because TEMPs is above freezing. SWC increases from 15 to 33 hours due to rain which fell during the eighth, ninth, and twelfth hours and then froze (Fig. 12). SWC decreases from 33 hours to the end of the simulation because TEMPs is above freezing. LWC increases from 8 to 15 hours because TEMPs is above freezing and rainfall that fell during the eighth, ninth, and twelfth hours. LWC decreases from 15 to 33 hours because TEMP is below freezing. At 33 hours, LWC increases again as TEMPs rises above freezing and then decreases at 43 hours because liquid water is being released from the snowpack because LWC is greater than LWCAP (see eq 5). The excess water released from the snowpack is shown as EXCESS_LWC in Figure 14.

Figure 14 shows the behavior of EXCESS_LWC with respect to LWC, and LWCAP. LWC behaves as described in Figure 13. EXCESS_LWC is zero until just before 45 hours when LWC exceeds LWCAP. EXCESS_LWC is greater than zero whenever LWC exceeds LWCAP. EXCESS_LWC fluctuates due to changes in the air temperature, precipitation, and melting. LWCAP gradually decreases with time.

Figure 15 shows the relationship between TEMPs and SDEP. SDEP decreases during the entire simulation due to SNOWMELT and COMPACTION. SDEP decreases most rapidly when TEMPs is greater than zero. Furthermore, the largest decreases in SDEP are accompanied by the greatest increases in TEMPs. For example, a significant increase in TEMPs accompanies a significant decrease in SDEP from 33 to 36 hours.

Figure 16 shows the behavior of RHO and TRHO_I relative to TEMPs. For simplification, all of TEMPs is not included in Figure 16. RHO and TRHO_I are two of the four objects which predict the value of snowpack density. TRHO_I is greater than RHO for the entire simulation except between 25 and 46 hours and after 87 hours when TEMPs is below 0°C. RHO exceeds TRHO_I between 25 and 46 hours and after 87 hours because RHO is affected by the value of SWC, which is affected by refreezing of liquid water when TEMPs is below 0°C. TRHO_I is not as sensitive to changes in SWC because it is not as closely linked to SWC as RHO.

Figure 17 shows the behavior of TRHO_DEL and TRHO_II relative to TEMPs. In sum, TRHO_DEL behaves similar to RHO and TRHO_II behaves similar to TRHO_I. TRHO_DEL and TRHO_II are the other two of the four objects which predict the value of snowpack density.

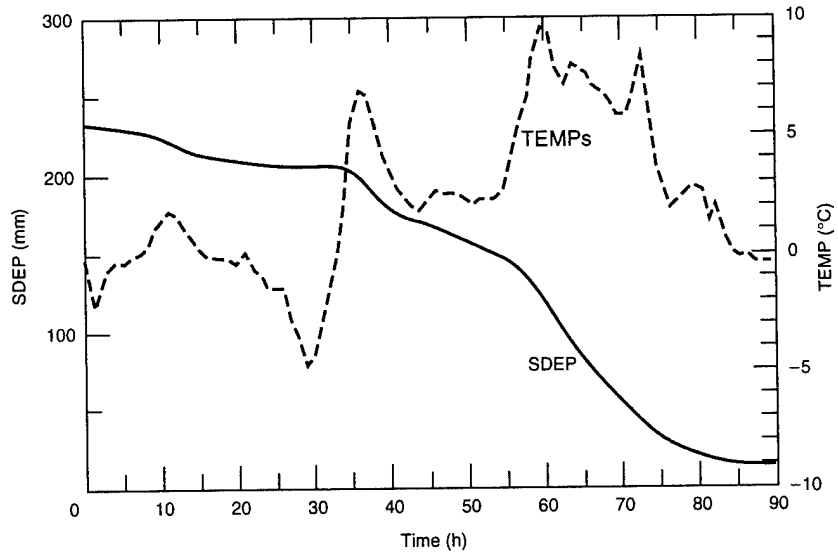

Figure 15. Relationship between TEMPs and SDEP. SDEP decreases during the entire simulation due to snowmelt and compaction. SDEP decreases most rapidly when TEMPs is greater than zero; therefore, air temperature has a large effect on SDEP.

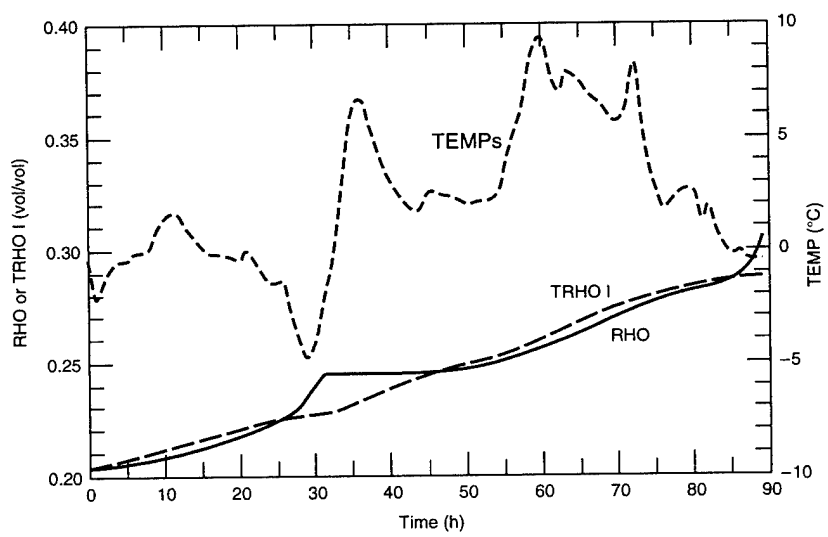

Figure 16. Behavior of RHO and TRHO_I with respect to TEMPs. TRHO_I steadily increases for the entire simulation period. RHO steadily increases except when TEMPs drops below zero from 22 to 30 hours and when TEMPs drops below zero again from 87 to 90 hours. This figure shows that RHO is more sensitive than TRHO_I to changes in TEMPs because RHO significantly increases twice when TEMPs drops below zero while TRHO_I steadily increases despite the value of TEMPs.

TRHO_II is greater than TRHO_DEL for the entire simulation except between 25 and 46 hours and after 87 hours when TEMP is below 0°C. TRHO_DEL exceeds TRHO_II between 25 and 46 hours and after 87 hours, because the value of TRHO_DEL is affected by SWC, which is affected by refreezing of liquid water when TEMP is below 0°C. TRHO_II is not as sensitive to changes in SWC, because it is not as closely linked to SWC as TRHO_DEL.

Demonstration of conservation of mass

Mass is conserved within SWC and LWC of the Hydrology section as shown in Table 5. Table 5

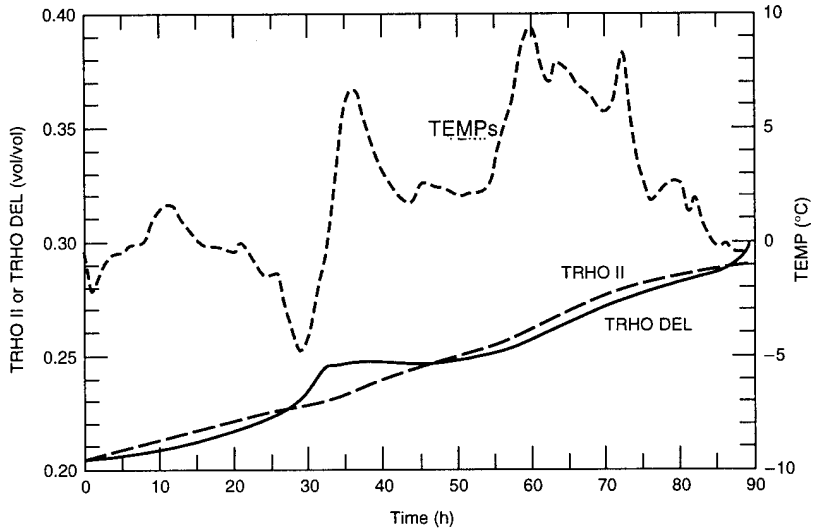

Figure 17. Behavior of TRHO_DEL and TRHO_II. TRHO_II steadily increases for the entire simulation period. TRHO_DEL steadily increases except when TEMPs drops below zero from 22 to 30 hours and when TEMPs drops below zero again from 87 to 90 hours. This figure shows that TRHO_DEL is more sensitive than TRHO_II to changes in TEMPs, because TRHO_DEL significantly increases twice when TEMPs drops below zero while TRHO_II steadily increases despite the value of TEMPs.

Table 5. Conservation of mass within SWC.

Hours	*SWC*	*MELT I*	*MELT II*	*REFREZ*	*SNOWE*	*SUBLM*	*TEMPs*
0	46.8	0	0	0	0	0.1	−0.4
1	46.7	0	0	0	0	0.1	−2.3
2	46.6	0	0	0	0	0.1	−1.3
3	46.5	0	0	0	0	0.1	−0.6
4	46.4	0	0	0	0	0.1	−0.4
5	46.3	0	0	0	0	0.1	−0.4
6	46.2	0	0	0	0	0.1	−0.2
7	46.1	0	0	0	0	0.1	−0.1
8	46	0.04	0	0	0	0	0.2
9	45.96	0.21	0	0	0	0	1
10	45.75	0.31	0	0	0	0	1.5
11	45.44	0.38	0	0	0	0	1.8
12	45.06	0.33	0	0	0	0	1.6
13	44.73	0.21	0	0	0	0	1
14	44.52	0.15	0	0	0	0	0.7
15	44.37	0.02	0	0	0	0	0.1
16	44.35	0	0	0.04	0	0.1	−0.2
17	44.3	0	0	0.04	0	0.1	−0.2
18	44.24	0	0	0.06	0	0.1	−0.3
19	44.2	0	0	0.06	0	0.1	−0.3
20	44.16	0	0	0.08	0	0.1	−0.4

demonstrates that conservation of mass occurs with SWC for every hour, because the value of SWC minus MELT_I, minus MELT_II, minus SUBLM, plus REFREZ, plus SNOWE equals the value of SWC for the next hour (eq 2). SUBLM was set to 0.1 to help demonstrate conservation of mass.

Table 6 shows that mass is conserved within LWC. For any hour, LWC plus MELT, minus EXCESS_LWC, minus REFREZ, plus RAIN_IN_I equal LWC for the following hour. According to Table 6 the value of LWC at 16 hours should be 5.15, but is 5.16 due to round off error.

Table 7 shows that mass is conserved in SDEP. SNOW_IN was set to ten from five to 15 hours to better demonstrate conservation of mass. For any hour, SDEP minus COMPACTION, minus SNOWMELT, plus SNOW_IN equals SDEP for the following hour.

Table 6. Demonstration of conservation of mass within LWC.

Hours	*LWC*	*MELT I*	*EXCESS LWC*	*REFREZ*	*RAIN IN I*	*TEMPs*
0	0	0	0	0	0	−0.4
1	0	0	0	0	0	−2.3
2	0	0	0	0	0	−1.3
3	0	0	0	0	0	−0.6
4	0	0	0	0	0	−0.4
5	0	0	0	0	0	−0.4
6	0	0	0	0	0	−0.2
7	0	0	0	0	0	−0.1
8	0	0.04	0	0	1.17	0.2
9	1.21	0.21	0	0	2.17	1
10	3.59	0.31	0	0	0	1.5
11	3.9	0.38	0	0	0	1.8
12	4.28	0.33	0	0	0.17	1.6
13	4.78	0.21	0	0	0	1
14	4.99	0.15	0	0	0	0.7
15	5.13	0.02	0	0	0	0.1
16	5.16	0	0	0.04	0	−0.2
17	5.11	0	0	0.04	0	−0.2
18	5.07	0	0	0.06	0	−0.3
19	5.01	0	0	0.06	0	−0.3
20	4.95	0	0	0.08	0	−0.4

Table 7. Demonstration of conservation of mass within SDEP.

Hours	*SDEP*	*COMPACTION*	*SNOWMELT*	*SNOW IN*	*TEMPs*
0	232	0.26	0	0	−0.4
1	231.74	0.37	0	0	−2.3
2	231.37	0.48	0	0	−1.3
3	230.89	0.57	0	0	−0.6
4	230.32	0.65	0	0	−0.4
5	229.67	0.06	0	10	−0.4
6	239.6	1.38	0	10	−0.2
7	248.22	1.08	0	10	−0.1
8	257.14	1.12	0.22	10	0.2
9	265.8	1.1	1.1	10	1
10	273.6	1.1	1.68	10	1.5
11	280.81	1.1	2.05	10	1.8
12	287.67	1.09	1.85	10	1.6
13	294.72	1.07	1.17	10	1
14	302.48	1.04	0.83	10	0.7
15	310.61	1.02	0.12	10	0.1
16	319.47	2.04	0	0	−0.2
17	317.43	1.92	0	0	−0.2
18	315.51	1.82	0	0	−0.3
19	313.69	1.71	0	0	−0.3
20	311.99	1.61	0	0	−0.4

Table 8. Tabular demonstration of the behavior of RHO, TRHO I, TRHO II, and MRHO with repect to TEMPs.

Hours	RHO	TRHO DEL	TRHO I	TRHO II	MRHO	TEMPs
0	0.201724	0.202579	0.201724	0.2029	0.35	−0.4
1	0.201998	0.202773	0.202854	0.2036	0.35	−2.3
2	0.202342	0.202955	0.203559	0.2043	0.35	−1.3
3	0.202774	0.203439	0.204337	0.2052	0.35	−0.6
4	0.203286	0.203987	0.20517	0.206	0.35	−0.4
5	0.203864	0.204566	0.206018	0.2069	0.35	−0.4
6	0.204494	0.205183	0.206865	0.2077	0.35	−0.2
7	0.205172	0.205865	0.207727	0.2086	0.35	−0.1
8	0.205888	0.20658	0.208597	0.2095	0.35	0.2
9	0.206643	0.20735	0.209491	0.2105	0.35	1
10	0.207447	0.208215	0.210457	0.2115	0.35	1.5
11	0.208299	0.209102	0.21147	0.2125	0.35	1.8
12	0.209193	0.210015	0.212512	0.2135	0.35	1.6
13	0.210112	0.210906	0.21353	0.2145	0.35	1
14	0.211038	0.211769	0.214486	0.2154	0.35	0.7
15	0.211964	0.212665	0.215412	0.2163	0.35	0.1
16	0.212878	0.213527	0.216281	0.2171	0.35	−0.2
17	0.213961	0.214544	0.217123	0.218	0.35	−0.2
18	0.215001	0.215591	0.217963	0.2188	0.35	−0.3
19	0.216094	0.216661	0.218793	0.2196	0.35	−0.3
Final	0.217138	0.217714	0.21962	0.2204	0.35	−0.4

Table 8 shows the numeric value of each of the four density estimates (RHO, TRHO_DEL, TRHO_I, TRHO_II), MRHO, and TEMPs. The columns for RHO, TRHO_DEL,TRHO_I, and TRHO show more significant digits to emphasize the differences among them.

TECHNICAL DESCRIPTION OF GROFF2

Runoff generation is represented in Object-GAWSER by five sectors entitled "GROFF1," GROFF2," GROFF3," GROFF4," and "GROFF5." GROFF1 calculates the water budget for impervious surfaces, and GROFF2, GROFF3, GROFF4, and GROFF5 calculate the water budget for the soil

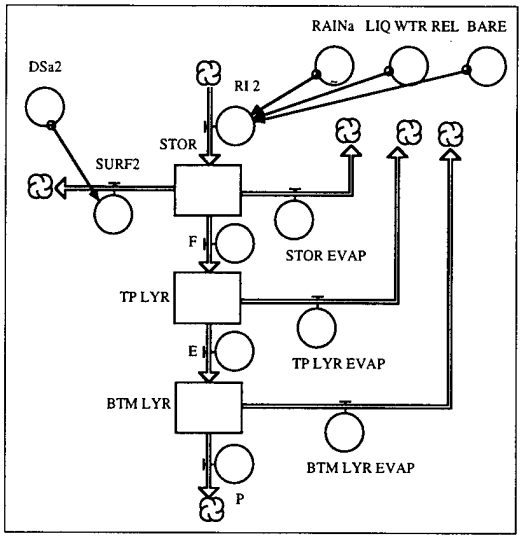

Figure 18. GROFF2. For simplification, only the main elements of GROFF2 are shown. RI_2, RAINa, LIQ_WATER_REL, and BARE control the amount of snowmelt or rainfall that will enter depression storage on the soil surface (STOR). STOR and DSa calculate the amount of water in depression storage on the soil surface. SURF2 represents runoff. F represents infiltration of liquid water from depression storage (STOR) into the top layer of soil (TP_LYR). E represents seepage from the top soil layer (TP_LYR) to a bottom soil layer (BTM_LYR). P represents percolation from BTM_LYR to subsurface and groundwater storage (not shown). STOR_EVAP, TP_LYR_EVAP, and BTM_LYR_EVAP simulate water evaporated from the soil surface, and the top and the bottom soil layers, respectively.

surface, the top layer of soil, and the bottom layer of soil (see Fig. 1). Only GROFF2 will be described in this section because it is representative of all the other GROFF sectors. The objects in GROFF2 are shown in Figure 18.

The name, brief description, initial condition, and units of each variable featured in GROFF2 are listed in Table 9. BARE is set to zero because the watershed considered is completely snow covered. TOP_LYR and BTM_LYR are the product of the adjusted initial moisture content and height of the

Table 9. Explanation of the variables in GROFF2.

Variable	*Description*	*Initial condition*	*Units*
BARE	percent of ground not covered by snow	0	decimal
BTM LYR	water stored in bottom soil layer	99	mm
BTM LYR EVAP	evaporation rate from bottom soil horizon	0	mm/h
CSa	maximum seepage rate	0.42	mm/h
Ds	maximum percolation rate	0.35	mm/h
DSa2	adjusted depression storage depth	0	mm
E	seepage	0.25	mm/h
F	infiltration	0	mm/h
FP	infiltrability	6.63	mm/h
FP_2	rate of infiltration	0	mm/h
G_I	gravity-draining soil-water capacity for TP LYR	30	mm
G_II	gravity-draining soil-water capacity for BTM LYR	90	mm
IMCa	adjusted initial moisture content for top soil layer	0.48	vol/vol
KEFFa	adjusted effective hydraulic conductivity	0.13	mm/h
LIQ_WTR_REL	liquid water released from the snowpack	0	mm/h
MD_I	soil–water deficit for the top soil layer	0.12	mm
P	percolation	0.04	mm/h
RAINa	adjusted rainfall	0	mm/h
RI_2	rainfall/snowmelt input	0	mm/h
SA_I	available storage in top soil layer	12	mm
SA_II	available storage in bottom soil layer	81	mm
SAVa	adjusted average suction at the wetting front	200	mm
SURF2	surface runoff	0	mm/h
STOR	depression storage	0	mm
STOR_EVAP	evaporation rate from depression storage	0	mm/h
TINF	total amount of infiltrated water	0.48	mm
TP_LYR	water stored in top soil layer	48	mm
TP_LYR_EVAP	evaporation rate from top soil horizon	0	mm/h

Note: The variables in GROFF2 are similar to the variables in GROFF1, GROFF3, GROFF4, and GROFF5; therefore, for simplification the variables from those sections will not be shown.

top and bottom soil layers, respectively. STOR_EVAP, TOP_LYR_EVAP, and BTM_LYR_EVAP are set to zero. "F" (which decrements STOR) is equal to zero because no water is located in depression storage (STOR = 0). "E" (which decrements TP_LYR) is greater than zero because there is water stored in the top layer of soil (TP_LYR is greater than zero). "P" (which decrements BTM_LYR) is greater than zero, because water is stored in the bottom soil layer (BTM_LYR is greater than zero). RI_2 is zero because it is the sum of RAINs and LIQ_WTR_REL, which are both equal to zero. SURF is zero because STOR is zero. RAINs is equal to the initial condition shown on p. 4-26 of the GAWSER manual. TINF was set to 0.48 (the initial moisture content). Please note that in the original GAWSER model, TINF is set to 0.00001, but 0.48 yielded more accurate approximations of F and SURF in Object-GAWSER (Schroeter 1989).

Discussion of equations

The following equations are embedded in the objects shown in Figure 18:

$$\mathrm{STOR}_{t1} = \mathrm{STOR}_{t0} + dt\left(\mathrm{RI_2}_{\Delta t} - F_{\Delta t} - \mathrm{STOR_EVAP}_{\Delta t} - \mathrm{SURF2}_{\Delta t}\right) \tag{22}$$

$$\mathrm{TP_LYR}_{t1} = \mathrm{TP_LYR}_{t0} + dt\left(F_{\Delta t} - E_{\Delta t} - \mathrm{TP_LYR_EVAP}_{\Delta t}\right) \tag{23}$$

$$\mathrm{BTM_LYR}_{t1} = \mathrm{BTM_LYR}_{t0} + dt\left(E_{\Delta t} - P_{\Delta t} - \mathrm{BTM_LYR_EVAP}_{\Delta t}\right). \tag{24}$$

As shown in Figure 18, STOR is incremented by RI_2 and decremented by F, STOR_EVAP, and SURF2 (eq 22). TP_LYR is incremented by F and decremented by E and TP_LYR_EVAP (eq 23). BTM_LYR is incremented by E and decremented by P and BTM_LYR_EVAP (eq 24). RAIN, LIQ_WTR_REL, BARE are part of an equation within RI_2 which calculates the amount by which RI_2 increments STOR (see eq 25). DSa2 is part of an equation in SURF2 which calculates the amount by which SURF2 decrements STOR (see eq 26).

Equation 25 calculates the amount of rainfall or snowmelt that will enter depression storage (STOR). If the subwatershed is completely snowcovered, BARE equals zero and only snowmelt will enter STOR. If no snow cover is present, BARE equals one and only rainfall will enter STOR. Finally, if the subwatershed is partially snow covered, BARE will be between zero and one and a weighted amount of rainfall and snowmelt will enter STOR:

If BARE = 0 then RI_2 = LIQ_WTR_REL
If BARE > 0 then RI_2 = [(RAINa × BARE) + (1-BARE)×LIQ_WTR_REL] (25)

Equation 26 calculates the runoff fin GROFF2. This equation decrements STOR by the difference between STOR and DSa when STOR is greater than DSa2:

If STOR>DSa2 then SURF = STOR-DSa2
If STOR<=DSa2 then SURF = 0 (26)

The available storage in the top and bottom soil layers is calculated with the equations embedded in the objects shown in Figure 19. In this figure, SA_I is incremented by "SA_I_in" and decremented by "SA_I_out" (eq 27). "SA_I_in" contains the value of "E" and "SA_I_out" contains the value of "F" (eq 29 AND 30). SA_II is incremented by "SA_II_in" and decremented by SA_II_out (eq 28). "SA_II_in" contains the value of P and "SA_II_out" contains the value of E (eq 31 and 32.):

$$\mathrm{SA_I}_{t1} = \mathrm{SA_I}_{t0} + dt\left(\mathrm{SA_I_in}_{\Delta t} - \mathrm{SA_I_out}_{\Delta t}\right) \tag{27}$$

$$\mathrm{SA_II}_{t1} = \mathrm{SA_II}_{t0} + dt\left(\mathrm{SA_II_in}_{\Delta t} - \mathrm{SA_II_out}_{\Delta t}\right) \tag{28}$$

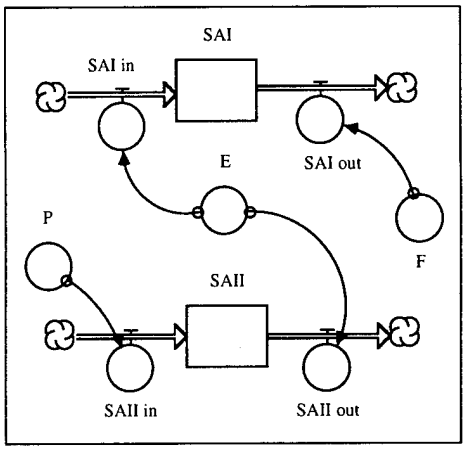

Figure 19. SA_I and SA_II. SAI, SA_I_in, SA_I_out, F, and E are used to calculate the available storage in the top soil layer (TP_LYR). SA_II, SA_I_in, SA_II_out, P, and E are used to calculate the available storage in the bottom soil layer (BTM_LYR).

where SA_I_in = E (29)

SA_I_out = F (30)

SA_II_in = P (31)

SA_II_out = E. (32)

The following equations are used to calculate F, E, and P:

$$F = FP_2 \tag{33}$$

where

If	(RI_2 <=FP and STOR=0)	then	FP_2 = RI_2
If	(RI_2 > FP or STOR > 0)	then	FP_2 = FP
If	(SA_I = 0 and E < FP)	then	FP_2 = E . (34)

Equations 25, 35 and 36 are used to calculate RI_2, FP and E respectively. Equation 35 represents the Green Ampt Equation (Mein and Larsen 1973, Haan et al. 1982):

$$FP = KEFFa \times (1 + SAVa \times MDI/TINF) \tag{35}$$

Equations 36 and 37 calculate E and P respectively and are further described in Holtan et al. (1975):

If	SA_I × G_I	then	E = [CSa × (1– SAI/G_I)]
If	SA_I >= G_I	then	E = 0
If	SA_II = 0	then	E = P (36)
If	SA_II < G_II	then	P = [Du × (1– SA_II/G_II)]
If	SA_II >= G_II	then	P = 0. (37)

Demonstration of conservation of mass

Table 10 shows that mass is conserved in STOR because STOR minus F, minus STOR_EVAP, plus RI_2, minus SURF for any hour equals the value of STOR in the following hour. Hours 40–50 were selected for this table as F, RI_2, and SURF are equal to zero before 40 hours.

Table 11 shows that mass is conserved within TP_LYR because TP_LYR plus F, minus E, minus TP_LYR_EVAP for any hour equal the value of TP_LYR for the following hour.

Table 12 shows that mass is conserved within BTM_LYR, because BTM_LYR plus E, minus P, and minus BTM_LYR_EVAP for any hour equal the value of BTM_LYR for the following hour.

Table 10. Tabular demonstration of conservation of mass within STOR.

Hours	*STOR*	*F*	*STOR EVAP*	*RI 2*	*SURF*
40	0	0	0	0	0
41	0	0	0	0	0
42	0	0	0	0	0
43	0	1.09	0	1.09	0
44	0	2.11	0	3.13	0
45	1.02	0.98	0	1.21	1.02
46	0.23	0.8	0	3.16	0.23
47	2.36	0.7	0	1.64	2.36
48	0.94	0.64	0	1.81	0.94
49	1.18	0.59	0	5.46	1.18
50	4.87	0.55	0	5.09	4.87

Table 11. Tabular demonstration of conservation of mass within TP_LYR.

Hours	*TP_LYR*	*F*	*E*	*TP_LYR_EVAP*
40	40.24	0	0.14	0
41	40.1	0	0.14	0
42	39.96	0	0.14	0
43	39.82	1.09	0.14	0
44	40.77	2.11	0.15	0
45	42.74	0.98	0.18	0
46	43.53	0.8	0.19	0
47	44.14	0.7	0.2	0
48	44.65	0.64	0.21	0
49	45.08	0.59	0.21	0
50	45.46	0.55	0.22	0

Figure 12. Tabular demonstration of conservation of mass within BTM_LYR.

Hours	BTM_LYR	E	P	BTM_LYR_EVAP
40	104.85	0.14	0.06	0
41	104.93	0.14	0.06	0
42	105.02	0.14	0.06	0
43	105.1	0.14	0.06	0
44	105.18	0.15	0.06	0
45	105.27	0.18	0.06	0
46	105.39	0.19	0.06	0
47	105.52	0.2	0.06	0
48	105.65	0.21	0.06	0
49	105.8	0.21	0.06	0
50	105.95	0.22	0.06	0

TECHNICAL DESCRIPTION OF SBS_STOR_&_FLOW_1

Subsurface and baseflow routing is included in the sectors called SBS_STOR_&_FLOW_1, SBS_STOR_&_FLOW_2, GDWTR_&_BASFLW_1, and GDWTR_&_BASFLW_2 and is accomplished using a single linear reservoir approach (Veissman et al 1977). In this approach, percolation (P) from the bottom soil layer (BTM_LYR) is converted from mm/h to m^3/s and then routed through a fictitious reservoir. The outflow from the reservoir is lagged by a specified amount to simulate the average time for a molecule of water to travel underneath the soil surface either as subsurface or base flow. Therefore, because subsurface flow moves more quickly than baseflow, subsurface flow is simulated by lagging the outflow from the linear reservoir by a relatively small amount of time while base flow is simulated by lagging the outflow from the linear reservoir by a relatively long amount of time. The name, brief description, initial condition, and units of each variable featured in this section are listed in Table 13. For simplification, only SBS_STOR_&_FLOW_1 will be described in this section because the overall structure of SBS_STOR_&_FLOW_2, GDWTR_&_BASFLW_1, and GDWTR_&_BASFLW_2 is identical to the overall structure of SBS_STOR_&_FLOW_1 .

The initial condition for DA was taken from page 5-13 of the GAWSER Manual. The initial condition of KSSa is equivalent to KSS on page 5-6 of the GAWSER manual. QSS was also taken from page 5-6 of the GAWSER manual. INFLOW_II is equal to I which is the product of P (from GROFF2), DA, FATR, and PCT_2. OUTFLOW_II is equal to INIT_OUTFLOW. INIT_OUTFLOW is the product of QSS, FATR, and PCT_2. SUBS_STOR is equal to INIT_SBS_STOR. INIT_SBS_STOR is equal to the product of INIT_OUTFLOW and KSSa (Schroeter 1989).

Figure 20 shows SBS_STOR_&_FLOW_1 which contains the linear reservoir routing equations used to route surbsurface flow. SBS_STOR is incremented by INFLOW_II and decremented by

Table 13. Explanation of the subsurface routing variables.

Variable	*Description*	*Initial condition*	*Units*
DA	drainage area	63	km^2
FATR	percentage of zone 2 simulated by GROFF2	0.95	decimal
I	percolation conversion factor	0.13	m^3/s
INFLOW_II	inflow to groundwater or subsurface storage	0.13	m^3/s
INIT_ISBS_ISTOR	initial groundwater or subsurface storage	8.03	m^3
INIT_IOUTFLOW	initial outflow from subsurface storage in zone 2	1.61	m^3/s
KSSa	adjusted subsurface flow recession constant	5	h
OUTFLOW_III	outflow from ground water or subsurface storage	1.61	m^3/s
PCT 2	areal fraction of zone 2 in the watershed	0.22	decimal
QSS	initial subsurface flow	0.046	m^3/s
SBS_STOR	groundwater or subsurface storage	8.03	mm

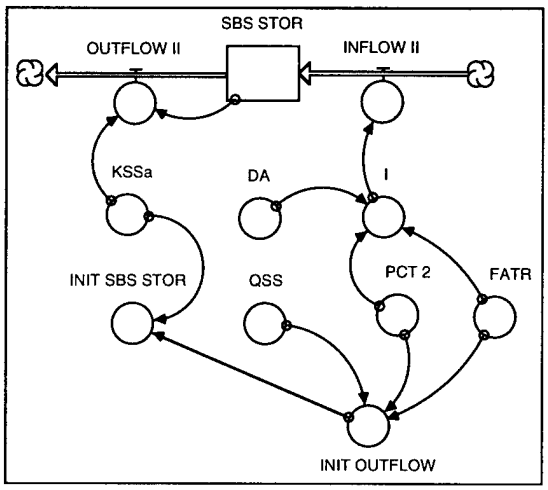

Figure 20. Subsurface flow routing. This structure is located beneath GROFF2 and routes percolation from the bottom soil layer through a linear reservoir to simulate the average time for a molecule of water to travel through zone 2 of the watershed as subsurface flow. SBS_STOR, INFLOW_II, and OUTFLOW_II form the linear reservoir. INFLOW_II, the input to the linear reservoir, contains the value of "I." "I" converts the percolation (P) generated from GROFF2 from mm/h to m^3/s. DA, PCT_2, FATR, and P (from GROFF2) are used to calculate "I." For simplification, "P" is not shown here. The output from the linear reservoir in OUTFLOW_II is delayed to simulate the average amount of time for a molecule of water to travel through zone 2 of the watershed as subsurface flow. The delay of flow in OUTFLOW_II is calculated by KSSa and SBS_STOR (eq 43). INIT_OUTFLOW and KSSa are used to calculate INIT_SBS_STOR (eq 44). QSS, PCT_2, and FATR are used to calculate INIT_OUTFLOW (eq 45). Only the main objects of SBS_STOR_&_FLOW_1 are shown here.

OUTFLOW_II (eq 40). INFLOW_II contains the value of I (eq 41). "I" is calculated with DA, FATR, P from GROFF2, and PCT_2 (eq 42). "P" is not shown for simplification. OUTFLOW_II is calculated with SBS_STOR and KSSa (eq 43). INIT_SBS_STOR is calculated with INIT_OUTFLOW and KSSa (eq 44). INIT_OUTFLOW is calculated with QSS, PCT_2, DA, and FATR (eq 45).

Equations 38 and 39 are the basic linear reservoir routing equations found in the literature from which the linear reservoir routing equations in Object-GAWSER are derived (Veissmann et al. 1977).*

* Equations 38 and 39 are equivalent to equations 13.1 and 13.33 in Veissmann et al. (1977).

$$I - O = dS/dt \tag{38}$$

$$S = K \times O \qquad \text{hence,} \qquad O = S/K. \tag{39}$$

Equation 38 states that the change in storage in a linear reservoir over time (*dS/dt*) is equal to the inflow to the linear reservoir (*I*) minus the outflow from the linear reservior (O). Equation 39 says that the storage in a linear reservoir (*S*) is equal to the outflow from the linear reservoir multiplied by a linear reservoir lag coeffiecient (*K*). Furthermore, both sides of eq 39 can be divided by K to calculate the outflow from the linear reservoir (the second part of eq 39).

Equations 40–45 are the equations in SBS_STOR_&_FLOW_1. INFLOW_11, SBS_STOR and OUTFLOW_II from eq 40 are equivalent to *I*, *S* and *O* respectively from eq 38. INFLOW_II is calculated with eq 41 and 42. OUTFLOW_II in eq 43 is equivalent to *O* in the second part of eq 39. INIT_SBS_STOR in eq 44 is equivalent to *S* at the beginning of a simulation. INIT_OUTFLOW in eq 45 is equivalent to *O* in the second part of eq 39 at the beginning of a simulation:

$$\text{SBS_STOR}_{t_1} = \text{SBS_STOR}_{t_0} + dt\left(\text{INFLOW_II}_{\Delta t} - \text{OUTFLOW_II}_{\Delta t}\right) \tag{40}$$

$$\text{INFLOW} = \text{I} \tag{41}$$

where $\text{I} = 0.2778 \times \text{DA} \times \text{P} \times \text{FATR} \times \text{PCT_2}$ (42)

$\text{OUTFLOW_II} = \text{GD_SBS_STOR} / \text{KSSa}$ (43)

$\text{INIT_SBS_STOR} = \text{INIT_OUTFLOW} \times \text{KSSa}$ (44)

$\text{INIT_OUTFLOW} = \text{QSS} \times \text{DA} \times \text{PCT_2} \times \text{FATR}$ (45)

TECHNICAL DESCRIPTION OF SRFRNF

Overland runoff routing is calculated within the sector called "SRFRNF." Overland runoff routing is accomplished by summing the surface runoff generated from each of the runoff generation sectors (GROFF1, GROFF2, GROFF3, GROFF4, and GROFF5) and delaying the flow of the runoff sum to simulate the average time required for all runoff to leave the watershed. The runoff delay is accomplished by routing the runoff sum through a linear reservoir and then a lag and route structure (Veissman et al. 1977). The name, brief description, initial condition, and units of each variable featured in this section are listed in Table 14.

The values for KL, KOa, and TLO were derived from p. 5-11 of the GAWSER training manual. KL is equivalent to the sum of TMC plus $^1/_2$ × (TOC) from page 5-11. KOa is identical to KO in the manual. TLO equivalent to TLO in the manual. The units for RSUM are m^3 h/s because it is calculated on an hourly basis and is incremented by SRF_RUNOFF whose units are in m^3/s. The rest of the values are equal to zero because they calculate the amount of runoff that is not initially generated in this example (Schroeter 1989).

Figure 21 is the structural diagram which contains the equations that perform runoff routing. The linear reservoir includes INFLOW_5, LIN_RES_STOR, OUTFLOW_5, and KL. The input to the linear reservoir structure, INFLOW_5, contains the sum of SURF1w, SURF2w, SURF3w, SURF4w, and SURF5w. The lag and route structure includes INFLOW_2, LG_RT_STOR, OUTFLOW_2, KOa, OUTFL_2_LAG, and TLO. The input to the lag and route structure, INFLOW_2, contains the value of OUTFLOW_5, output from the linear reservoir structure. The final output from the lag and route structure, OUTFL_2_LAG, is converted from mm/h to m^3/h within SRF_RUNOFF. RSUM calculates the total surface runoff from the watershed.

Equations 46–48 are the linear reservoir routing equations in Object-GAWSER that route runoff and are derived from eq 38 and 39:

Table 14. Explanation of the surface routing variables.

Variable	*Description*	*Initial condition*	*Units*
DSa	adjusted depression storage depth	0	mm
I	inflow to linear reservoir	0	mm/h
INFLOW_2	inflow to lag and route structure	0	mm/h
INFLOW _5	inflow to linear reservoir	0	mm/h
K	linear reservoir lag	15	h
KOa	adjusted overland linear reservoir lag	15	h
KL	first linear reservoir lag	12.5	h
LG_RT_STOR	lag and route storage	0	mm
LIN_RES_STOR	linear reservoir storage	0	mm
O	outflow from linear reservoir	0	mm/h
OUTFLOW_2	outflow from LG RT STOR	0	mm/h
OUTFLOW _5	outflow from LIN RES STOR	0	mm/h
OUTFL_2_LAG	OUTFLOW 2 lagged by TLO	0	mm/h
RSUM	total surface runoff	0	m^3 h/s
S	storage in linear reservoir	0	m^3/s
SRF_RUNOFF	surface runoff	0	mm
SURF1w	weighted surface runoff from GROFF1	0	mm/h
SURF2w	weighted surface runoff from GROFF2	0	mm/h
SURF3w	weighted surface runoff from GROFF3	0	mm/h
SURF4w	weighted surface runoff from GROFF4	0	mm/h
SURF5w	weighted surface runoff from GROFF5	0	mm/h
TLO	overland linear channel lag	5	h

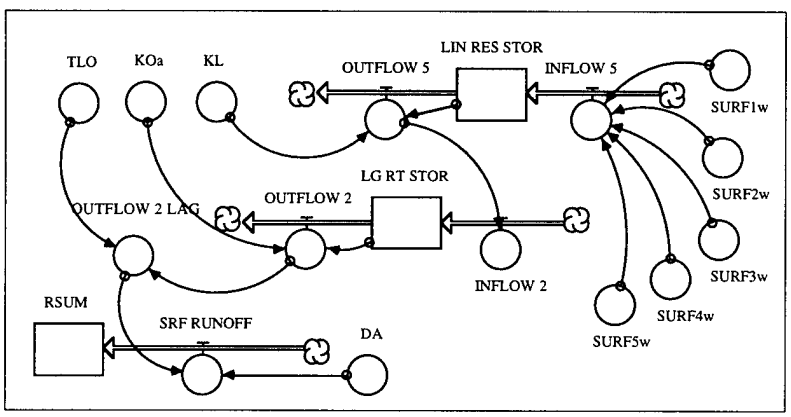

Figure 21. Runoff routing. Runoff is routed through a linear reservoir followed by a lag and route structure to simulate the average time for a molecule of water to travel as runoff to the outlet of a watershed. INFLOW_5, LIN_RES_STOR, OUTFLOW_5, and KL collectively represent the linear reservoir. INFLOW_5 represents the input to the linear reservoir and contains the sum of SURF1w, SURF2w, SURF3w, SURF4w, and SURF5w. The outflow from the linear reservoir in OUTFLOW_5 is lagged by the quotient of LIN_RES_STOR divided by KL. The lagged outflow from the linear reservoir becomes the inflow to the lag and route structure via INFLOW_2. INFLOW_2, LG_RT_STOR, OUTFLOW_2, OUTFLOW_2_LAG, and TLO represent the lag and route structure. The lag and route structure is composed of a linear reservoir (represented by INFLOW_2, LG_RT_STOR, and OUTFLOW_2) and a lag (represented by OUTFLOW_2_LAG and TLO). In sum, the outflow from the lag and route structure is lagged twice. First, the outflow is lagged in OUTFLOW_2 because OUTFLOW_2 is the quotient of LG_RT_STOR divided by KOa and not the full amount of water contained within LG_RT_STOR (eq 51). Second, the outflow in OUTFLOW_2 is lagged in OUTFL_2_LAG by an amount specified in TLO (eq 52).

$$\text{LIN_RES_STOR}_{t_1} = \text{LIN_RES_STOR}_{t_0} + dt(\text{INFLOW_5}_{\Delta t} - \text{OUTFLOW_5}_{\Delta t}) \tag{46}$$

where

$$\text{INFLOW_5} = \text{SURF1+SURF2+SURF3+SURF4+SURF5} \tag{47}$$

$$\text{OUTFLOW_5} = \text{LIN_RES_STOR / KL} \tag{48}$$

In eq 46, LIN_RES_STOR (the equivalent of *dS/dt* in eq 38) is incremented by INFLOW_5 (the equivalent of "I" in eq 46) and decremented by OUTFLOW_5 (the equivalent of the second part of eq 39). INFLOW_5 contains the sum of the surface runoff from the entire watershed (eq 47). The outflow from LIN_RES_STOR is delayed within OUTFLOW_5 because OUTFLOW_5 decrements LIN_RES_STOR by the quotient of LIN_RES_STOR and KL rather than the full amount in LIN_RES_STOR (eq 48).

Equations 49–54 perform the lag and route calculations. The lag and route method is equivalent to a linear reservoir with an extra delay. Equations 49–51 represent the linear reservoir while eq 52 represents the extra delay.

$$\text{LG_RT_STOR}_{t_1} = \text{LG_RT_STOR}_{t_0} + dt(\text{INFLOW_2}_{\Delta t} - \text{OUTFLOW_2}_{\Delta t}) \tag{49}$$

$$\text{INFLOW_2} = \text{OUTFLOW_5} \tag{50}$$

$$\text{OUTFLOW_2} = \text{LG_RT_STOR/KOa} \tag{51}$$

$$\text{OUTFLOW_2_LAG} = \text{OUTFLOW_2}_{t_1 - \text{TLO}} \tag{52}$$

where TLO is a specified time in hours (see Table 14). The units of surface runoff are converted from mm/h to m^3/s in equation 53.

$$\text{SRF_RUNOFF} = 0.2778 \times \text{DA} \times \text{OUTFL_2_LAG}. \tag{53}$$

The total surface runoff from the watershed is calculated by eq 54:

$$\text{RSUM}_{t_1} = \text{RSUM}_{t_0} + dt(\text{SRF_RUNOFF}_{\Delta t}). \tag{54}$$

In eq 49, LG_RT_STOR is incremented by INFLOW_2 and decremented by OUTFLOW_2 where INFLOW_2 contains the value of OUTFLOW_5 from eq 48. The outflow from LG_RT_STOR is also delayed because OUTFLOW_2 is the quotient of LG_RT_STOR and KOa (eq 51). An extra delay is computed in OUTFL_2_LAG as OUTFLOW 2 is delayed in OUTFL_2_LAG by the value of TLO (eq 52).

In eq 53, the lagged and routed surface runoff is converted from mm/h to m^3/s in SRF_RUNOFF by multiplying OUTFL_2_LAG by DA and 0.2778. Finally, in eq 54, RSUM is incremented by SRF_RUNOFF to calculate the total amount of surface runoff from the watershed.

Figure 22 shows that flow was lagged by the linear reservoir in the top of Figure 21 because the peak of INFLOW_5 occurs shortly after 60 hours while the peak for OUTFLOW_5 occurs at roughly 75 hours. Figure 22 also shows the smoothing effect of a linear reservoir because the shape of OUTFLOW_5 is much smoother than the shape of INFLOW_5. The smoothing is due to delayed outflow from and storage within the linear reservoir. The difference in magnitude between the peak of INFLOW_5 and OUTFLOW_5 is also due to the storage effect in the linear reservoir structure.

Figure 23 shows the delays created by the lag and route structure. INFLOW_2 (also equal to OUTFLOW_5 from the linear reservoir structure) is the input to the lag and route structure and should therefore peak the earliest. OUTFLOW_2 represents the first delay created by the lag and route structure and should therefore peak after INFLOW_2. OUTFLOW_2_LAG represents the sec-

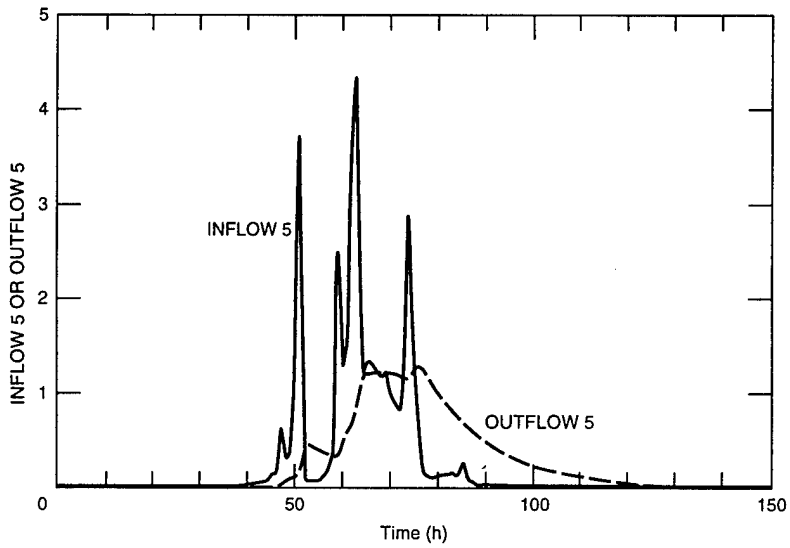

Figure 22. Lag created by a linear reservoir. INFLOW_5 peaks shortly after 60 hours while OUTFLOW_5 peaks near 75 hours. The difference in peak time shows the lag created by the linear reservoir in that the inflow to the linear reservoir (INFLOW_5) peaks before the outflow from the linear reservoir (OUTFLOW_5). Furthermore, OUTFLOW_5 is much smoother than INFLOW_5. The difference in smoothness is due to the storage of water within and gradual release of water from the linear reservoir.

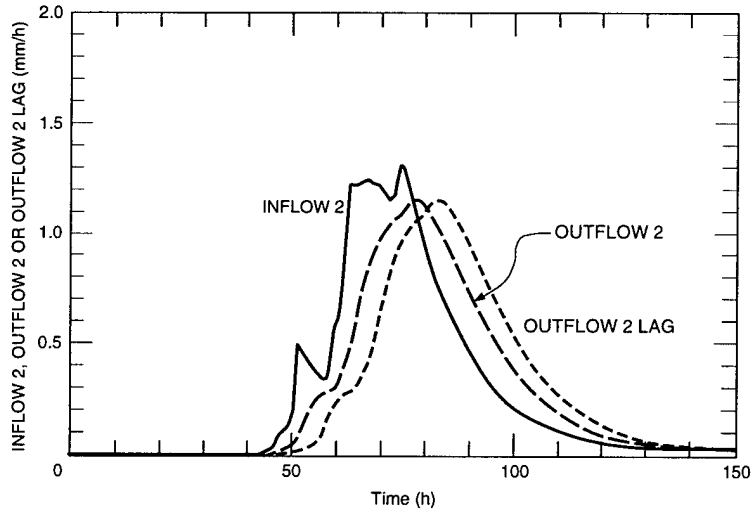

Figure 23. Behavior of the lag and route structure. INFLOW_2 peaks at 75 hours, OUTFLOW_2 peaks at 79 hours, and OUTFLOW_2_LAG peaks at 84 hours. The difference in peak times among INFLOW_2, OUTFLOW_2, and OUTFLOW_2_LAG shows the effect of the lags located in the lag and route structure because INFLOW_2 is the inflow to the linear reservoir in the lag and route structure, OUTFLOW_2 is the lagged outflow from the linear reservoir in the lag and route structure, and OUTFLOW_2_LAG is OUTFLOW_2 lagged by three hours. The difference in smoothness between INFLOW_2 and OUTFLOW_2 is due to the storage of water within and gradual release of water from the linear reservoir in the lag and route structure. The similarity in smoothness between OUTFLOW_2 and OUTFLOW_2_LAG is because OUTFLOW_2_LAG is the value of OUTFLOW_2 delayed by three hours.

ond delay of the lag and route structure. OUTFLOW_2_LAG should therefore peak after OUTFLOW_2. Figure 23 shows that the lag and route structure operates properly because INFLOW_2 peaks first, OUTFLOW_2 peaks second, and OUTFL_2_LAG peaks third. The smoothing effect first shown in Figure 21 is also shown in Figure 22 by the difference between INFLOW_2 and OUTFLOW_2. OUTFLOW_2 and OUTFL_2_LAG are equal in magnitude because there is no storage of water as the water from OUTFLOW_2 is delayed and becomes OUTFLOW_2_LAG. The difference in magnitude between OUTFLOW_2, OUTFL_2_LAG and INFLOW_2 is due to the storage effect of LG_RT_STOR.

TECHNICAL DESCRIPTION OF CHNLRTNG

Channel routing is performed in the sector entitled "CHNLRTNG." The lagged values of runoff, subsurface flow, and baseflow are summed together to represent the total discharge from the watershed outlet. The total discharge then enters a fictitious channel that begins at the watershed outlet. Object-GAWSER routes the discharge from the watershed outlet through the fictitious channel using the Muskingum technique (Nash 1959, Dooge 1973). The name, brief description, initial condition, and units of each variable featured in this section are listed in Table 15.

Table 15. Explanation of the channel routing variables.

Variable	*Description*	*Initial condition*	*Units*
CHNL INFLW	inflow to channel segment	4.82	m^3/s
CHNL OUTFLW	outflow from channel segment	10.1	m^3/s
CHNL STOR	storage in channel segment	85.1	m^3 h/s
DA	drainage area of the watershed	63	km^2
K	linear reservoir lag	10	h
QBGW	initial subsurface base flow	2.59	m^3/s
QBSS	Initial ground water base flow	0.863	m^3/s
DISCHARGE	discharge from watershed	4.82	m^3/s
QSUM	total discharge from watershed	8.51	m^3 h/s
OUTFLOW_CLC	outflow calculation	10.09	m^3/s
OUTFLOW_II	outflow from ground water or subsurface storage from zone 2	0.45	m^3/s
OUTFLOW_III	outflow from ground water or subsurface storage from zone 3	0.07	m^3/s
OUTFLOW_IV	outflow from ground water or subsurface storage from zone 4	0.24	m^3/s
OUTFLOW_V	outflow from ground water or subsurface storage from zone 5	4.07	m^3/s
SRF_RUNOFF	runoff	0.0	m^3/s
X	Muskingum (wedge storage) weighting coefficient	0.3	unitless

Initial conditions were derived in the following manner. DA is identical to DA on page 5-13 of the GAWSER manual. K and X are identical to K and X from a modified version of Lesson 3 in the GAWSER manual. CHNL_INFLW, CHNL_OUTFLW, DISCHARGE, OUTFLOW_II, OUTFLOW_III, OUTFLOW_IV, OUTFLOW_V, OUTFLOW_CLC, and SRF_RUNOFF were derived by Object-GAWSER. The initial value of QSUM is equal to the sum of QSS and QB. CHNL_STOR is equal to the sum of QSS and QB multiplied by K. The units for CHNL STOR are m^3 h/s because it is incremented by m^3/s and is calculated hourly. QSS is identical to QBSS on page 4-16 of the GAWSER manual. QB is identical to QBGW on page 4-16 of the GAWSER manual. The units for QSUM are m^3 h/s because QSUM is incremented by m^3/s and is calculated hourly.

Figure 24 is the structural diagram for the entire channel routing sector (CHNLRTNG) which contains the equations that perform channel routing. The discharge from the watershed outlet is calculated with DISCHARGE, OUTFLOW_II, OUTFLOW_III, OUTFLOW_IV, QSUM, and SRF_RUNOFF. The Muskingum method, which routes the discharge from the watershed outlet along a fictitious channel segment, is calculated with CHNL_INFLW, CHNL_STOR, CHNL_OUTFL, OUTFL_CALC, K, and X. QSS and QB are used to calculate both the discharge

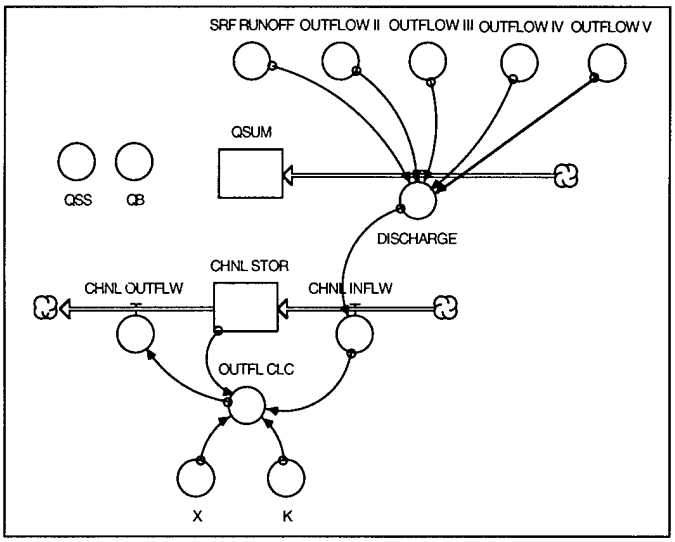

Figure 24. The entire channel routing sector (CHNLRTNG). The objects in the upper half of the diagram are used to calculate the discharge from the watershed outlet (the top half of the diagram includes those objects which lie above CHNL_STOR). The objects in the bottom half of the diagram are used to calculate the routing of the discharge along a fictitious channel segment that begins at the watershed outlet. QSS and QB, from the top half of the diagram, are the only objects used to calculate both the discharge from the watershed and the routing of the discharge along the fictitious channel segment.

from the watershed outlet and the subsequent routing of that discharge along a fictitious channel segment.

Equations 55–62 are used for channel routing. Equations 55 and 56 are the theoretical equations for the Muskingum method and are described in Veissman et al 1977.* Equations 57–62 are the equations used in Object-GAWSER to perform channel routing.

Solving eq 55 for O yields eq 56.

$$S = K[XI + (1 - X)O] \tag{55}$$

$$O = S/[(I - X)K - XI/(I - X). \tag{56}$$

Equation 57 calculates the rate of discharge from the watershed outlet and increments eq 58:

$$\text{DISCHARGE} = \text{OUTFLOW_II}+\text{OUTFLOW_III}+\text{OUTFLOW_IV}+\text{OUTFLOW V} + \text{SRF_RUNOFF} \tag{57}$$

Equation 57 calculates the total discharge from the subwatershed outlet:

$$\text{QSUM}_{t_1} = \text{QSUM}_{t_0} + dt(\text{DISCHARGE}_{\Delta t}). \tag{58}$$

Equation 59 calculates the volume of water stored in the channel segment and is equivalent to eq 55. CHNL STOR is incremented by CHNL_INFLW and decremented by CHNL_OUTFLW_CHNL_INFLW equals "I" while CHNL_OUTFLW equals "O" from eq 56.

$$\text{CHNL_STOR}_{t_1} = \text{CHNL_STOR}_{t_0} + dt(\text{CHNL_INFLW}_{\Delta t} - \text{CHNL_OUTFLW}_{\Delta t}) \tag{59}$$

where

$$\text{CHNL_INFLW} = \text{DISCHARGE} \tag{60}$$

$$\text{CHNL_OUTFLW} = \text{OUTFL_CLC} \tag{61}$$

Equation 62 calculates the outflow from the channel segment:

$$\text{OUTFL_CLC} = [\text{CHNL STOR}] / \{(K \times (1 - X)] - [X/(1 - X)] \times \text{CHNL_INFLW}\}. \tag{62}$$

* Equation 55 is equivalent to equivalent to eq 13.3 in Veissmann et al. (1977).

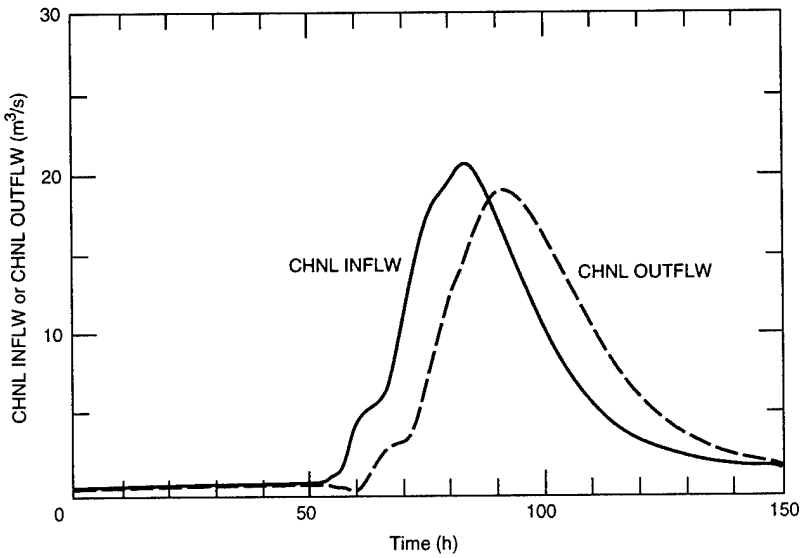

Figure 25. Inflow and outflow from a fictitious channel segment. This figure shows the results of the implementation of the Muskingum channel routing method in Object-GAWSER. CHNL_INFLW is the inflow to a channel segment. CHNL_OUTFLW is the outflow from the channel segment. CHNL_INFLW peaks at 83 hours and CHNL_OUTFLW peaks at 91 hours. The difference in the time and magnitude of the peaks shows that Object-GAWSER simulates the storage of water in a channel segment. Finally, the dip in CHNL_OUTFLW at 60 hours represents the "Muskingum dip" referred to in Chang et al. (1983).

Figure 25 describes the inflow and outflow from the channel segment. CHNL_OUTFLW is constant until shortly before 60 hours where it begins to dip down while CHNL_INFLW begins to increase. CHNL_OUTFLW begins to increase at 60 hours and peaks just after 90 hours. CHNL_INFLW peaks higher and earlier than CHNL_OUTFLW thereby indicating channel storage. The dip in CHNL_OUTFL illustrates one aspect of the Muskingum method in that outflow hydrographs dip below the level of constant flow before beginning to increase again (Chang et al. 1983).

SECTOR LINKAGES

Because each sector represents a different area in a watershed, the sectors were linked to simulate the movement of water from one area in a watershed to another area in a watershed. Sectors were linked using connectors and ghosts. Connectors are described in *Preliminary Description of STELLA II Objects*. Richmond (1994) describes ghosts as follows:

> The Ghost is a replica of a level, flow, or converter. A replica is not a 'copy,' as the term is used in the Copy and Paste sense. A Copy has an independant identity because it possesses its own underlying equation. By contrast, a replica is simply an image of the building block from [which] it was ghosted.

The name, brief description, and units of the objects featured in this section are listed in Table 16.

There are two links between SNOMLT and GROFF1. The first link between SNOMLT and GROFF1 simulates the flow of meltwater from the snowpack to impervious surfaces in the watershed. The first link was created by placing a ghost of LIQ_WTR_REL (the output from SNOMLT) within GROFF1 and linking the ghost to RI_1 (the input to GROFF1) with a connector. The second link was created to simulate rainfall on the impervious surfaces in a watershed that are not covered by snow. The second link was created by placing a ghost of RAINs from SNOMLT in GROFF1 and linking the ghost to RAINa. The value of RAINs is adjusted in RAINa. RAINa is linked to RI_1 with a connector. RI_1 contains an equation that determines the amount of meltwater and rainfall that will reach impervious surfaces in the watershed as a function of the percent of the watershed that is not covered by snow (BARE).

Table 16. Description of the variables considered in *Sector Linkages.*

Variable	*Description*	*Units*
BTM_LYR	bottom soil layer	mm
INFLOW_5	inflow to linear reservoir	mm/h
INFLOW_II	inflow to subsurface storage	m^3/s
LIQ_WTR_REL	liquid water released from the snowpack	mm/h
OUTFLOW_II	outflow from subsurface storage in zone two	m^3/s
OUTFLOW_III	outflow from ground water storage in zone two	m^3/s
OUTFLOW _IV	outflow from subsurface storage in zone three	m^3/s
OUTFLOW_V	outflow from groundwater storage in zone three	
DISCHARGE	discharge from subwatershed outlet	m^3/s
I	percolation conversion factor	m^3/s
P	percolation from the bottom soil soil layer	mm/h
RAINa	adjusted rainfall	mm/h
RI_1	rainfall/snowmelt input	mm/h
SRF_RUNOFF	total surface runoff from the watershed	m^3/s
SUBS_STOR	subsurface storage	mm
SURF1w	weighted surface runoff from zone 1	mm/h
SURF2w	weighted surface runoff from zone 2	mm/h
SURF3w	weighted surface runoff from zone 3	mm/h
SURF4w	weighted surface runoff from zone 4	mm/h
SURF5w	weighted surface runoff from zone 5	mm/h

If (BARE = 0) then RI_1 = LIQ_WTR_REL

If (BARE > 0) then RI_1 = (RAINa × (1-BARE) + LIQ_WTR_REL × BARE). (63)

Figure 26 shows the linkages between RAINs and RAINa; RAINa and RI_1; and LIQ_WTR_REL and RI_1. For simplification, only the main objects are shown from GROFF1.

SNOMLT is also linked to GROFF2, GROFF3, GROFF4, and GROFF5 just as SNOMLT is linked to GROFF1. For simplification, these linkages will not be described because they are designed identically to the linkages between SNOMLT and GROFF1.

GROFF1, GROFF2, GROFF3, GROFF4, GROFF5 were linked to SRFRNF to simulate the overland flow of water in a watershed (GROFF1, GROFF2, GROFF3, GROFF4, GROFF5 calculate the amount of runoff produced by a watershed and SRFRNF simulates the routing of runoff to the watershed outlet). Linkages between sectors were made by placing a ghost of SURF1w, SURF2w, SURF3w, SURF4w, and SURF5w from GROFF1, GROFF2, GROFF3, GROFF4, GROFF5 respectively within SRFRNF. Each ghost was then linked to INFLOW_5 (the input to SRFRNF) with a connector. The equation within INFLOW_5 sums the values within SURF1w, SURF2w, SURF3w, SURF4w, and SURF5w (eq 64):

INFLOW_5 = SURF1w + SURF2w + SURF3w + SURF4w + SURF5w. (64)

Figure 27 shows the linkage between GROFF1, GROFF2, GROFF3, GROFF4, GROFF5, and SRFRNF. For simplification, only the linkages among the sectors were shown.

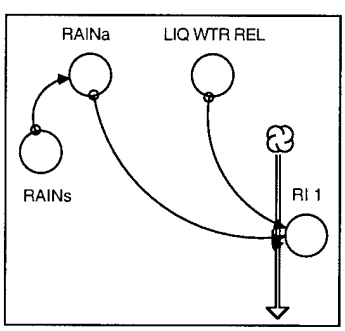

Figure 26. The two linkages between SNOMLT and GROFF1. LIQ_WTR_REL and RAINs are ghosts of LIQ_WTR_REL and RAINs from SNOMLT. These two ghosts are connected to objects in GROFF1 with connectors. The first linkage between SNOMLT and GROFF1 is represented by the connection between RAINs and RAINa. The second linkage between SNOMLT and GROFF1 is represented by the connection between LIQ_WTR_REL and RI_1.

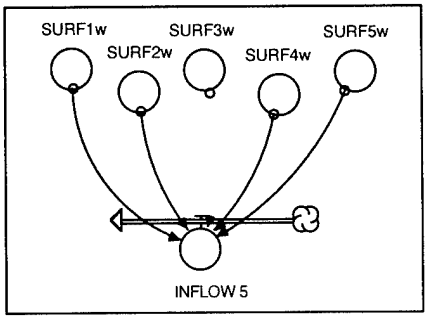

Figure 27. The linkage between GROFF1, GROFF2, GROFF3, GROFF4, GROFF5, and SRFRNF. SURF1w, SURF2w, SURF3w, SURF4w, and SURF5w from GROFF1, GROFF2, GROFF3, GROFF4, and GROFF5 were ghosted, placed within SRFRNF and linked to INFLOW_5 with connectors. For simplification, only those objects that are used to link the sectors are shown.

To simulate the percolation of water from the bottom soil layer (BTM_LYR) to subsurface storage, GROFF2 was linked to SBS_STOR_&_FLOW_1 and GROFF4 was linked to SBS_STOR_& _FLOW_2. To simulate the percolation of water from from the bottom soil layer to groundwater storage, GROFF3 was linked to GDWTR_&_BASFLW_1 and GROFF5 was linked to GDWTR_& _BASFLW_2. No ghosts were used to link these sectors. Instead, these sectors were connected by linking the object representing the output from one sector with the object representing the input to another sector with a connector.

Figure 28 shows the linkage between GROFF2 and SBS_STOR_&_FLOW_1. For simplification, this figure only includes the objects which which best describe the link between GROFF2 and SBS_STOR_&_FLOW_1. In addition, GROFF2 appears much larger in the main object model.

Figure 28 shows that "P," the output from GROFF2, is linked to "I," the input to SBS_STOR_&_FLOW_1 with a connector. The link between GROFF3 and GDWTR_&_ BASFLW_1, GROFF4 and SBS_STOR_&_FLOW_2, GROFF5 and GDWTR_&_BASFLW_2 are not be shown because they are identical to the link between GROFF2 and SBS_STOR_&_FLOW_1.

To simulate the discharge from the watershed outlet, SRFRNF, SBS_STOR_&_FLOW_1, SBS_STOR_&_FLOW_2, GDWTR_&_BASFLW_1, and GDWTR_&_BASFLW_2 were linked to CHNLRTNG. The link between SRFRNF and CHNLRTNG represents the contribution of surface runoff to discharge. The link between SBS_STOR_&_FLOW_1 and CHNLRTNG represents the contribution of subsurface flow from zone 2 to discharge. The link between GDWTR_&_BASFLW_1 and CHNLRTNG represents the contribution of baseflow from zone 2 to discharge. The link between

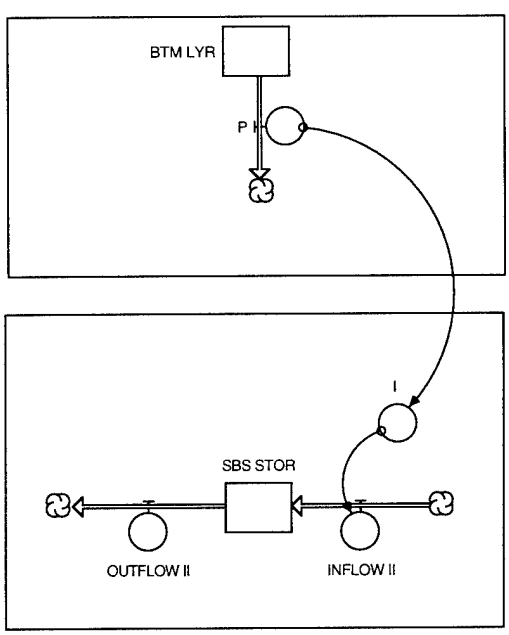

Figure 28. The link between GROFF2 and SBS_STOR_&_FLOW_1. The link between GROFF2 and SBS_STOR_&_FLOW_1 represents the percolation of water in zone two from the bottom soil layer (BTM_LYR) to surbsurface storage (SBS_STOR). "P," the output from GROFF2, is linked to "I," the input to SBS_STOR_&_FLOW_1, with a connector. The link between GROFF2 and SBS_STOR_&_FLOW_1 is identical to the link which joins GROFF3 to GDWTR_&_BASFLW_1, GROFF4 to SBS_STOR_&_FLOW_2, and GROFF5 to GDWTR_&_BASFLW_2. For simplification, only those objects which represent the linkage between GROFF2 and SBS_STOR_&_FLOW_1 are shown.

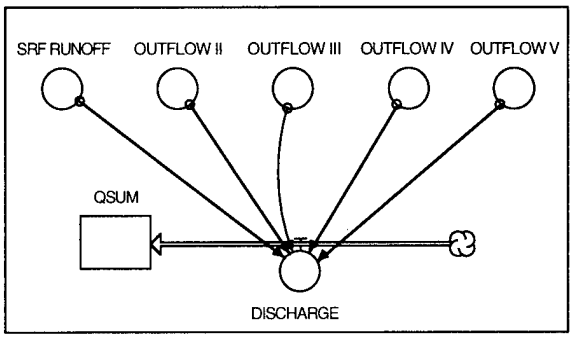

Figure 29. The links used to simulate discharge from the watershed outlet. Ghosts of SRF_RUNOFF, OUTFLOW_II, OUTFLOW_III, OUTFLOW_IV, and OUTFLOW_V (the outputs from SRFRNF, GROFF2, GROFF3, GROFF4, and GROFF5 respectively) were placed in CHNLRTNG and linked to DISCHARGE (the input to CHNLRTNG) with a connector. DISCHARGE calculates the sum of the values in each of the ghosts for each time interval to simulate discharge from the watershed outlet.

SBS_STOR_&_FLOW_2 and CHNLRTNG represents the contribution of subsurface flow from zone 3 to discharge. The link between GDWTR_&_BASFLW_2 and CHNLRTNG represents the contribution of baseflow from zone 3 to discharge.

Figure 29 shows that these sectors were linked by placing ghosts of SRF_RUNOFF (the output from SRFRNF), OUTFLOW_II (the output from SBS_STOR_&_FLOW_1), OUTFLOW_III (the output from GDWTR_&_BASFLW_1), OUTFLOW_IV (the output from SBS_STOR_&_FLOW_2), and OUTFLOW_V (the output from GDWTR_&_BASFLW_2) in CHNLRTNG and then linking those ghosts to DISCHARGE (the input to CHNLRTNG) with connectors. DISCHARGE contains the sum of SRF_RUNOFF, OUTFLOW_II, OUTFLOW_III, OUTFLOW_IV, and OUTFLOW_V (eq 65):

$$\text{DISCHARGE} = \text{OUTFLOW_II} + \text{OUTFLOW_III} + \text{OUTFLOW_IV} + \text{OUTFLOW_V} + \text{SRF_RUNOFF} \tag{65}$$

RESULTS

The figures in this section will explain the differences and similarities between the outputs of the Fortran version of GAWSER and Object-GAWSER. In the following text, all variables preceded by the word "GAWSER" represent the Fortran version of GAWSER. All other variables represent Object-GAWSER.

Results from the SNOMLT sector

Figure 30 shows that SWC and LAG GAWSER SWC (the Fortran version's estimate of SWC lagged by one hour) are identical; therefore Object-GAWSER predicts SWC one hour later than the Fortran version of GAWSER. The time difference may be explained by the numerical integration method used by Object-GAWSER to calculate SWC. The time difference between Object-GAWSER and the Fortran version of GAWSER's prediction of SWC is shown in further detail in Figure 31.

Figure 31 shows the behavior of SWC and GAWSER SWC (the Fortran version's estimate of SWC not lagged by one hour). The scale of Figure 31 was increased show the difference between SWC and GAWSER_SWC. SWC rises, levels off, and falls one hour later than GAWSER SWC.

Figure 32 explains the similarities and differences between LWC and LAG_GAWSER_LWC (the Fortran version's estimate of LWC lagged by one hour). LWC and LAG_GAWSER_LWC are equiv-

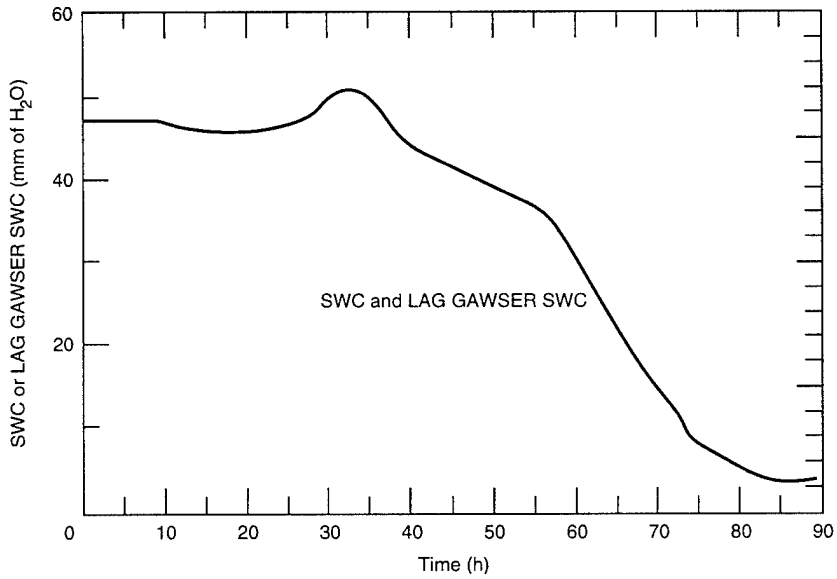

Figure 30. Behavior of the solid water content of the snowpack. SWC matches LAG_GAWSER_SWC (the Fortran prediction of SWC lagged by one hour). The one-hour difference between SWC and LAG_GAWSER _SWC is due to computational differences between Object-GAWSER and the Fortran version of GAWSER.

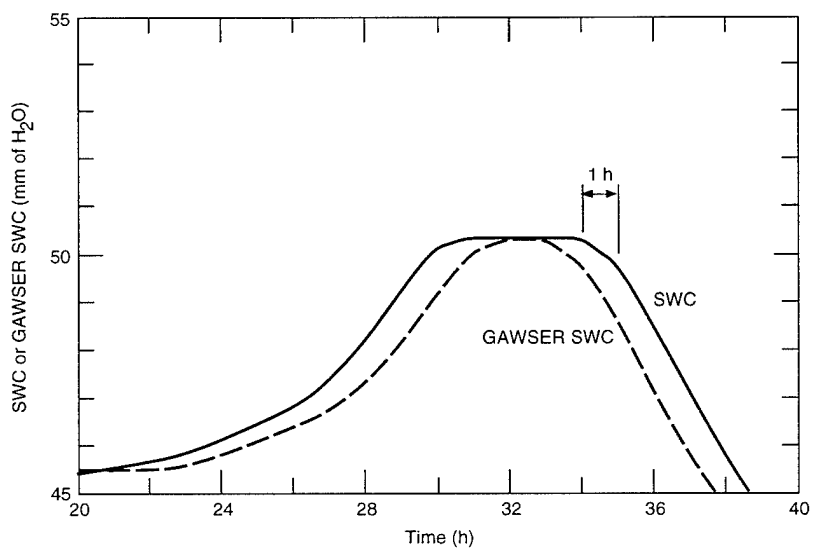

Figure 31. The one-hour difference between SWC and GAWSER SWC. The behavior of SWC for every hour is equal to the behavior of GAWSER_SWC for the previous hour.

alent until roughly 40 hours when LWC exceeds LAG_GAWSER_LWC. LWC exceeds LAG_GAWSER_LWC because LWCAP, which governs the magnitude of LWC according to eq 5, 6, and 8 is too large. LWCAP is too large because it is calculated with the value of SDEP, which is often larger than GAWSER_DEPTH (Fig. 33). Therefore, LWC and LAG_ GAWSER_LWC converge together by the end of the simulation because SDEP and GAWSER_DEPTH converge together as shown in Figure 33.

Figure 33 shows the similarities and differences between SDEP and GAWSER_DEPTH relative to TEMPs. SDEP and GAWSER_DEPTH are nearly identical until 23 hours into the simulation

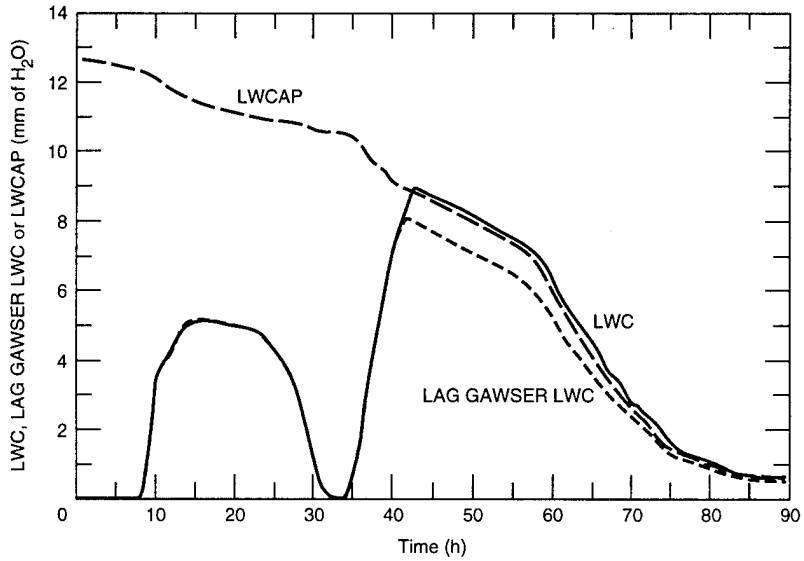

Figure 32. Liquid water content of the snowpack. LWC and LAG_GAWSER_LWC (the Fortran prediction of LWC lagged by one hour) match until 43 hours when LWC exceeds LAG_GAWSER_LWC. LWC exceeds LAG_GAWSER_LWC because Object-GAWSER's prediction of the liquid water holding capacity of the snowpack (LWCAP) is larger than the Fortran version's prediction of LWCAP. Object-GAWSER's prediction of LWCAP is too large because it is calculated using the value of SDEP, which is larger than the Fortran's prediction of SDEP (see SDEP and GAWSER DEPTH in Fig. 33). LWC and LAG_GAWSER_LWC converge by the end of the simulation period because SDEP and GAWSER_DEPTH converge by the end of the simulation period. The one-hour difference between LWC and LAG_GAWSER_LWC is due to computational differences between Object-GAWSER and the Fortran version of GAWSER.

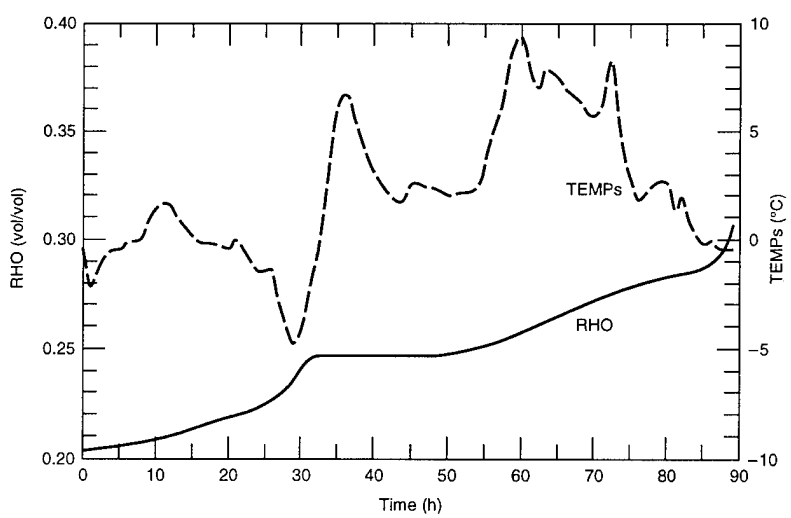

Figure 33. Behavior of RHO relative to TEMPs. RHO gradually increases from zero to 26 hours and from 50 hours to 87 hours. RHO significantly increases and then levels off from 26 to 50 hours when TEMPs experiences a large fluctuation. RHO significantly increases again beginning at 87 hours when TEMPs drops below zero. The coincidental changes in RHO and TEMPs show that RHO is sensitive to the behavior of TEMPs.

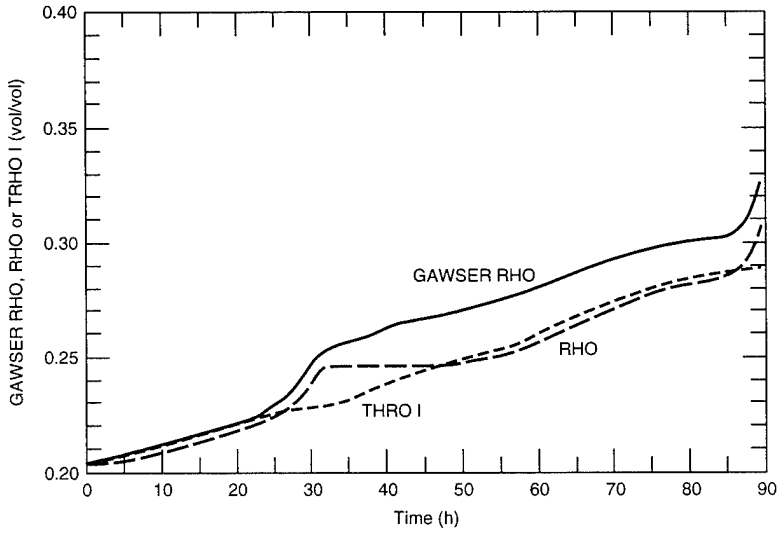

Figure 34. Behavior of the density of the snowpack. RHO and TRHO_I are two of four ways snowpack density is predicted. RHO and TRHO_I match GAWSER_RHO from zero to seven hours. RHO is closer to GAWSER_RHO than TRHO_I from 26 to 47 hours and from 87 to 90 hours. TRHO_I is closer to GAWSER_RHO than RHO from seven to 26 hours and from 47 to 87 hours.

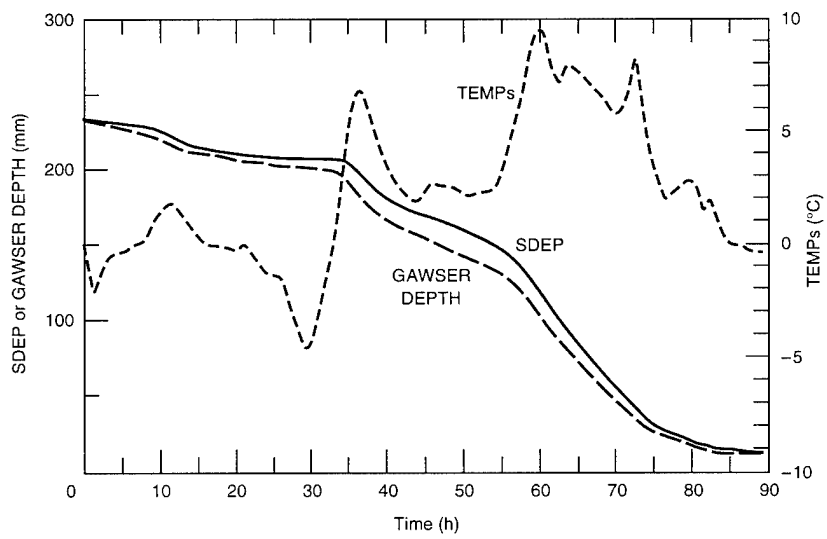

Figure 35. Behavior of SDEP and GAWSER DEPTH relative to TEMPs. SDEP and GAWSER DEPTH exhibit the same pattern throughout the entire simulation period, but differ in magnitude for almost the entire simulation period. The difference in magnitude is due to the difference in Object-GAWSER and the Fortran version's prediction of snowpack density because SDEP is calculated using the snowpack density. Figure 34 compares the Object-GAWSER and Fortan predictions of snowpack density. A large fluctuation in TEMPs beginning at 23 hours is coincidental with a noticeable divergence between SDEP and GAWSER_DEPTH.

when they begin to diverge as SDEP remains constant and GAWSER_DEPTH decreases. The divergence between SDEP and GAWSER_DEPTH at 23 hours is coincidental with a large change in TEMPs. At 23 hours, TEMPs rapidly decreases below 0°C and then rapidly increases above 0°C. SDEP and GAWSER_DEPTH begin converging after 55 hours and are identical shortly before the end of the simulation.

Figure 34 shows the behavior of RHO and TRHO_I relative to GAWSER_RHO_RHO and THRO_I are the most accurate of the four estimates of density in Object-GAWSER. From zero to 22.5 hours, TRHO_I is identical to GAWSER_RHO while RHO is slightly less than GAWSER_RHO. After 22.5 hours, GAWSER_RHO and TRHO_I diverge, while RHO increases just below GAWSER_RHO. RHO diverges from GAWSER_RHO beginning in 32 hours when RHO becomes constant and GAWSER RHO continues to increase. RHO and TRHO_I converge together below GAWSER_RHO from 47 to 87 hours. At 87 hours, RHO rapidly increases with GAWSER_RHO while TRHO_I gradually increases. The difference in behavior between RHO and TRHO_I is because RHO is more sensitive to changes in TEMPs (see Fig. 35).

Figure 35 shows the effect of TEMPs on the behavior of RHO. RHO experiences three major changes during the simulation period. The first change occurs from 26 to 29 hours when TEMPs drops rapidly. The second change occurs at 32 hours when RHO becomes constant and TEMPs rapidly rises above 0°C. RHO remains constant until 50 hours. The third major change occurs when RHO rapidly increases at 87 hours when TEMPs drops below 0°C. These major changes are not found in the behavior of TRHO_I (Fig. 16); therefore, RHO is more sensitive to temperature changes than TRHO_I. RHO gradually increases from zero to 26 and from 50 to 87 hours because TEMPs does not have any large fluctuations during those times relative to the times when RHO experiences a major change.

Figure 36 shows the relationship between GAWSER_LIQ_WTR_REL and LIQ_WTR_REL. Despite differences in the calculations of solid water content, liquid water content, snow depth, and density between GAWSER and Object-GAWSER, GAWSER_LIQ_WTR_REL and LIQ_WTR_REL are nearly identical. GAWSER_LIQ_WTR_REL and LIQ_WTR_REL are nearly identical except when runoff begins before 45 hours and before runoff ends at 90 hours. The difference between GAWSER LIQ_WTR_REL and LIQ_WTR_REL is caused either by the different computation methods used by Object-GAWSER and the Fortran version of GAWSER or the different predictions of LWCAP made by Object-GAWSER and the Fortran version of GAWSER. In the

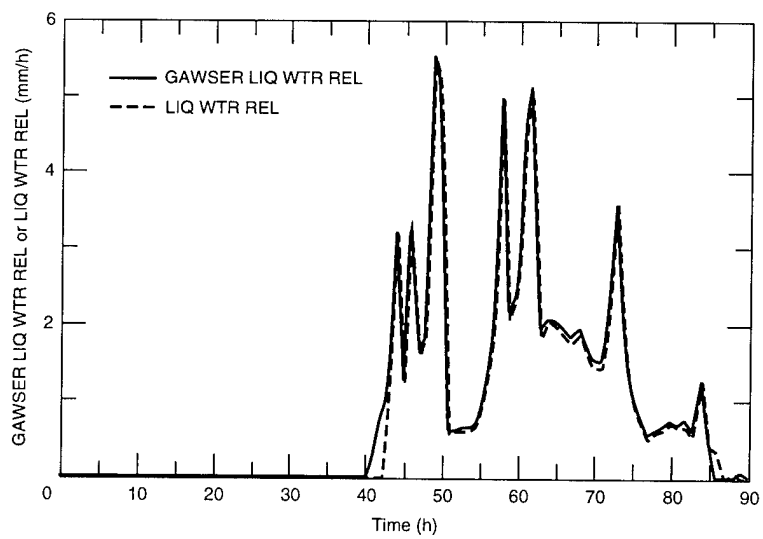

Figure 36. Behavior of the liquid water released from the snowpack. GAWSER LIQ_WTR_REL and LIQ_WTR_REL are almost identical for the entire simulation period. LIQ_WTR_REL is less than GAWSER LIQ_WTR_REL from 41 to 43 hours and from 60 to 71 hours. LIQ_WTR_REL is greater than GAWSER LIQ_WTR_REL from 84 to 86 hours. The difference between GAWSER LIQ_WTR_REL and LIQ_WTR_REL from 41 to 43 hours and from 84 to 86 hours is due to either computational differences between Object-GAWSER and the Fortran version of GAWSER or differences between Object-GAWSER and the Fortran version's prediction of LWCAP.

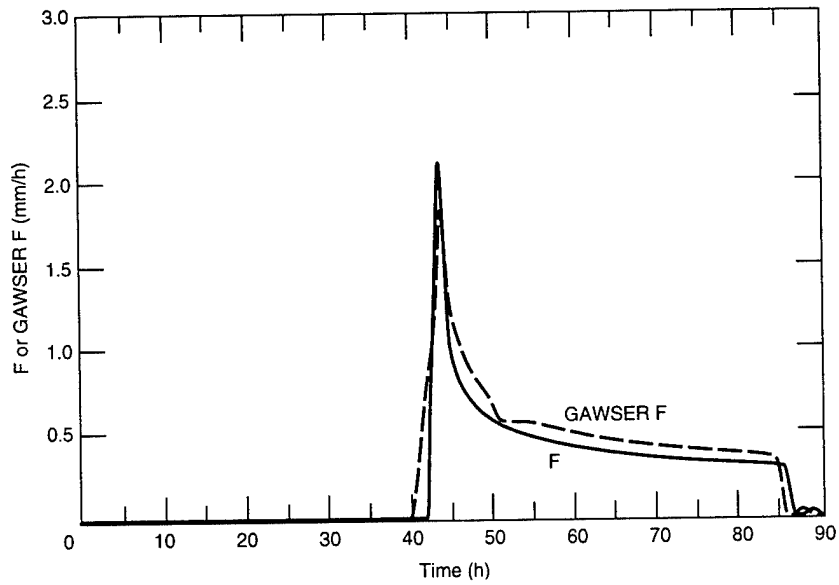

Figure 37. Behavior of infiltration. "F" begins and ends slightly later than GAWSER_F. F is slightly smaller than GAWSER_F for the majority of the simulation period except when the two peak at 45 hours and at the end of the simulation period. The differences in timing and magnitude between F and GAWSER_F is either due to either computational differences between Object-GAWSER and the Fortran version of GAWSER or a lag in Object-GAWSER that occurs as liquid water is routed through STOR before it enters F (see Fig. 18).

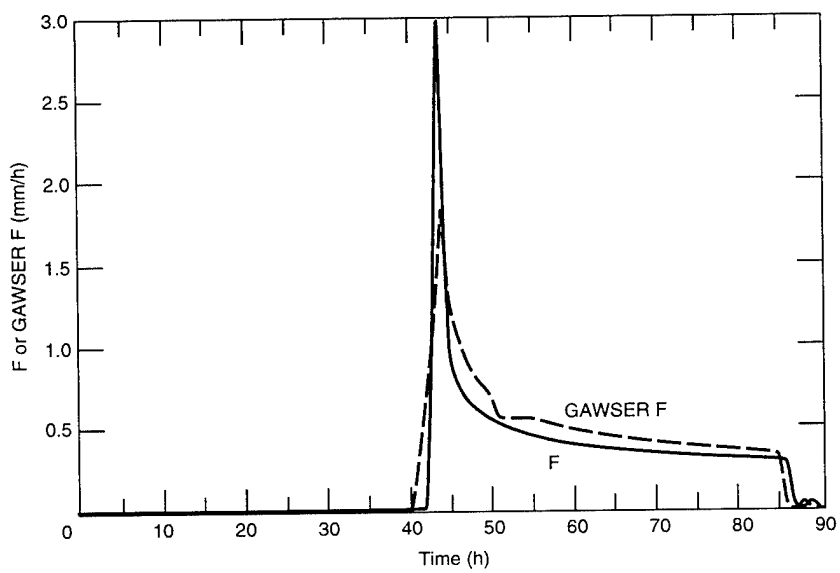

Figure 38. Behavior of infiltration using another initial value of TINF. The difference in magnitude between the peak of F and GAWSER_F in Figure 38 is much greater than the difference in magnitude between the peak of F and GAWSER_F shown in Figure 37 because F and GAWSER_F in Figure 38 were generated using a smaller initial value of TINF (total amount of water infiltrated into the top layer of soil). The initial value of TINF used to generate Figure 38 was 0.00001. The initial value of TINF used to generate Figure 37 was 0.48 (the value of IMCa or adjusted initial moisture content of the top layer of soil).

simulation shown in Figure 36, Object-GAWSER predicts 78.66 mm of total runoff while GAWSER predicts 78.13 mm of total runoff (0.6% difference).

Results from GROFF2

The following figures show the differences and similarities between outputs from the GROFF sector in Object-GAWSER and equivalent outputs from the Fortran version of GAWSER. To simplify the discussion, the results from GROFF2 rather than all of those from GROFF1–GROFF5 will be described.

Figure 37 shows the differences and similarities between F and GAWSER_F. F begins slightly later and peaks slightly higher than GAWSER_F. The two peaks are actually closer using the value of IMCa instead of 0.00001 (the value used within the Fortran GAWSER, see Figure 38) for the initial condition of TINF. Furthermore, F is slightly smaller and ends slightly later than GAWSER_F. The difference in the beginning and ending times and magnitudes of F and GAWSER_F is either due to computational differences between Object-GAWSER and the Fortran version of GAWSER or a lag in Object-GAWSER that occurs as liquid water travels through STOR before entering F (see Fig. 18).

Figure 38 shows the behavior of F using 0.00001 as an initial condition for TINF. The peaks of F and GAWSER F are further apart than the corresponding curves shown in Figure 36.

Figure 39 shows the differences and similarities between SA_I and GAWSER_SAI. SA_I and GAWSER SA_I are identical until just before 45 hours when GAWSER SA_I drops below SA_I until the end of the simulation period. The difference between SA_I and GAWSER_SA_I is due to the difference between F and GAWSER_F shown in Figure 38. SA_I is greater than GAWSER_SA_I because Object-GAWSER simulates less infiltration into the top soil layer, thereby rendering more available storage in the top layer.

Figure 40 shows the similarities and differences between SURF2 and GAWSER_SURF2. The two curves exhibit the same pattern, but SURF2 is slightly larger in magnitude. The difference in magnitude between SURF2 and GAWSER_SURF2 is due to the difference in magnitude between F

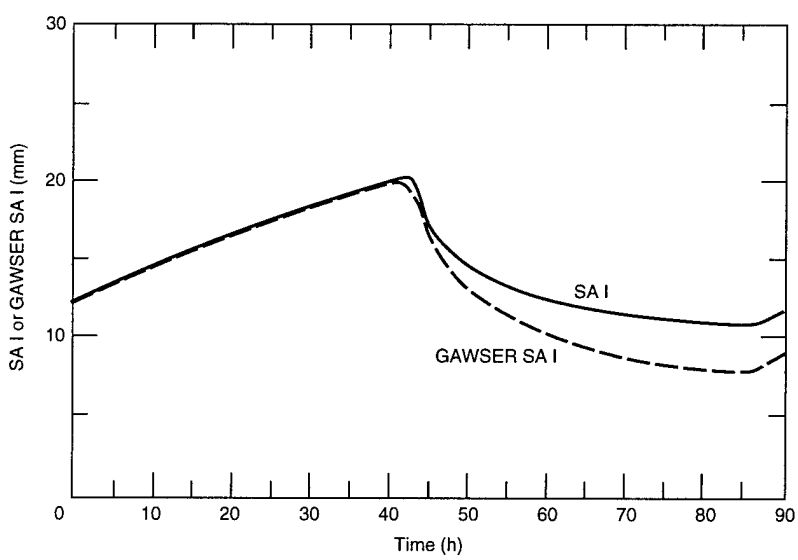

Figure 39. Behavior of available storage in the top layer of soil (TP_LYR). SA_I and GAWSER SA_I match identically until 43 hours. After 43 hours, SA_I is slightly larger than GAWSER_SA_I. The difference in magnitude between SA_I and GAWSER_SA_I is due to the difference between F and GAWSER_F (see Fig. 37). F decrements SA_I and GAWSER_F decrements GAWSER_SA_I. F is less than GAWSER_F for the majority of the simulation after after 43 hours; therefore, SA_I should be greater than GAWSER_SA_I after 43 hours.

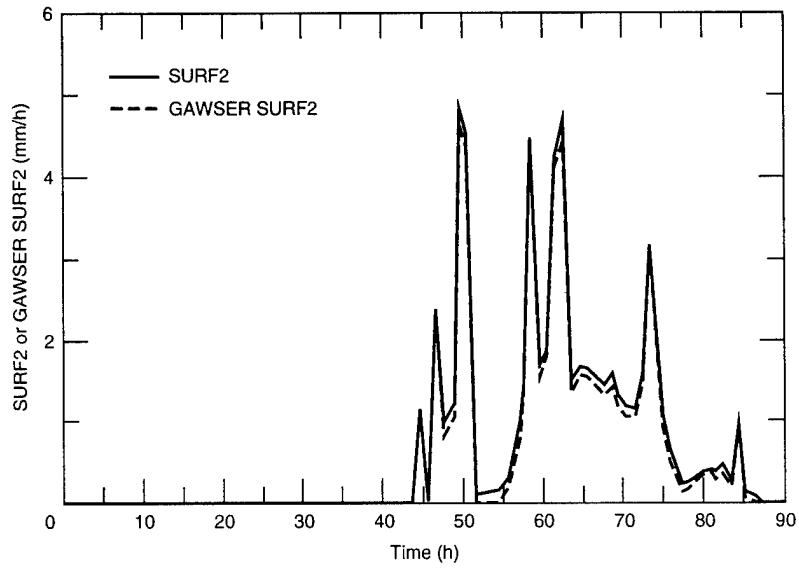

Figure 40. Behavior of runoff. SURF2 and GAWSER_SURF2 exhibit the same pattern, but differ slightly in magnitude in that SURF2 is slightly larger than GAWSER_SURF2. Object-GAWSER predicts more surface runoff because it predicts less infiltration than the Fortran version of GAWSER (see Fig. 37).

and GAWSER_F (Fig. 37) because SURF2 represents the rainfall and snowmelt that does not infiltrate. Therefore, Object-GAWSER should predict more surface runoff because it predicts slightly less infiltration. The first peak of SURF2 and GAWSER SURF2 are identical because IMCa, rather than 0.00001 was used for the initial value of TINF.

Figure 41 shows the behavior of SURF2 and GAWSER_SURF2 when 0.00001 is used as the initial condition for TINF. The two curves behave identically to those shown in Figure 40 except at 45 hours. Both SURF2 and GAWSER_SURF2 peak identically at 45 hours in Figure 41. At 45 hours in Figure 42, SURF2 is increasing while GAWSER_SURF2 is peaking.

Figure 42 shows the differences and similarities between E and GAWSER_E. The two curves are identical until shortly before 45 hours after which GAWSER_E becomes slightly larger than E (and

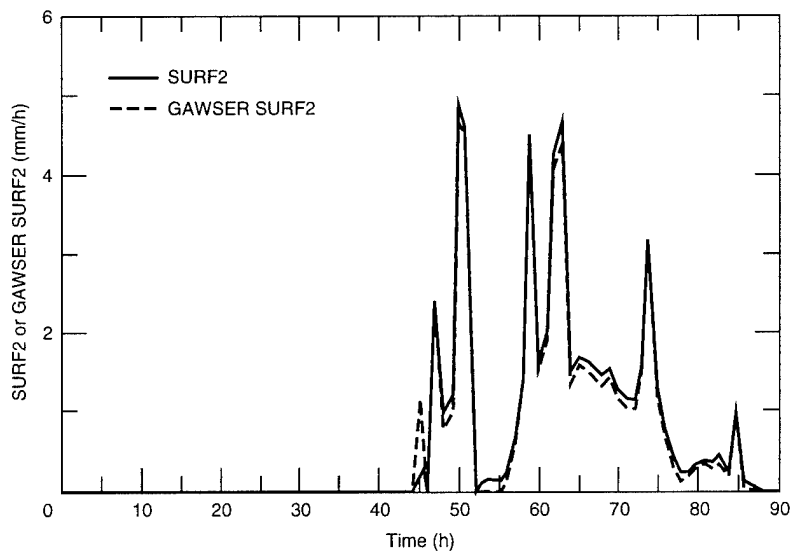

Figure 41. Behavior of runoff using a different initial value for TINF. When using an initial value of 0.00001 for TINF (instead of 0.48, the adjusted initial moisture content of the top soil layer), SURF2 and GAWSER_SURF2 do not peak together at 45 hours as is shown in Figure 40. After 45 hours, the behavior of SURF2 and GAWSER_SURF2 is the same as is shown in Figure 40.

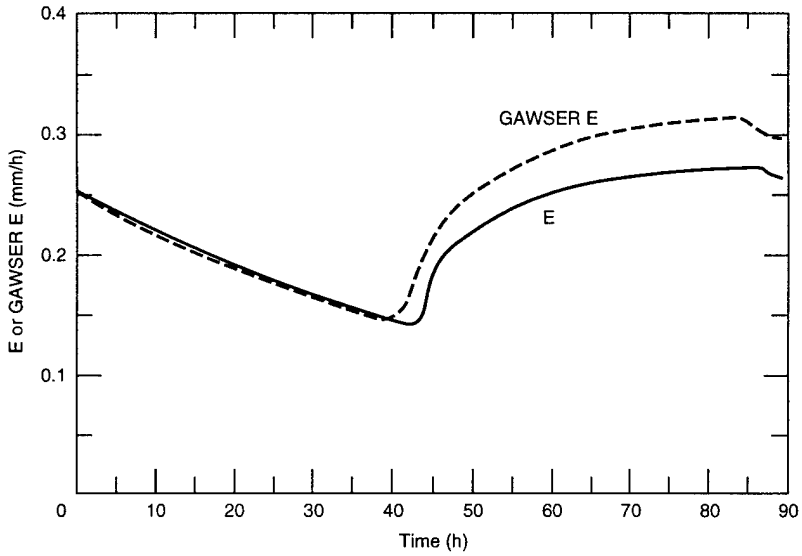

Figure 42. Seepage. GAWSER_E and E are identical from zero to five hours. GAWSER_E is slightly smaller than E from five to 41 hours. GAWSER_E is greater than E from 41 hours to the end of the simulation period. The difference between GAWSER_E and E is due to the difference in SA_I and GAWSER_SA_I (see Fig. 39) because SA_I is used to calculate E (see eq 36) and GAWSER_SA_I is used to calculate GAWSER_E (see eq A.19 in Schroeter 1989).

when SA_I becomes larger than GAWSER_SA_I in Figure 39. The difference in magnitude between E and GAWSER_E is due to the difference between SA_I and GAWSER_SA_I because SA_I is used to calculate E (eq 36).

Figure 43 shows the differences and similarities between SA_II and GAWSER SA_II. Both curves are identical for the first 45 hours after which they diverge. After 45 hours, SA_II is slightly larger than GAWSER SA_II. The difference between SA_II and GAWSER SA_II is due to the

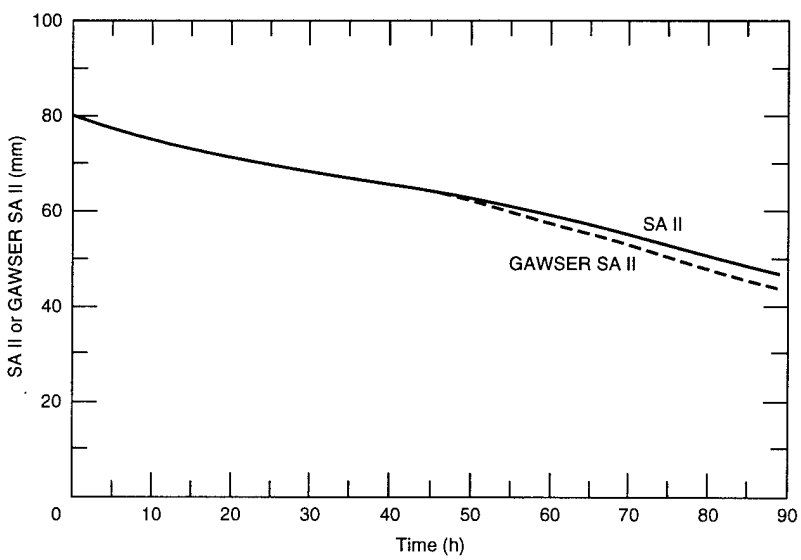

Figure 43. Available storage in the bottom soil layer. SA_II and GAWSER_SA_II match identically until 46 hours when SA_II becomes larger than GAWSER_SA_II. The divergence between SA_II and GAWSER_SA_II at 46 hours is due to the difference between E and GAWSER_E (see Fig. 42). E decrements SA_II (see eq 28 and 32) and GAWSER_E decrements GAWSER_SA_II (see eq A.21b of Schroeter 1989); therefore, because E is less than GAWSER_E after 46 hours, SA_II should be greater than GAWSER_SA_II after 46 hours.

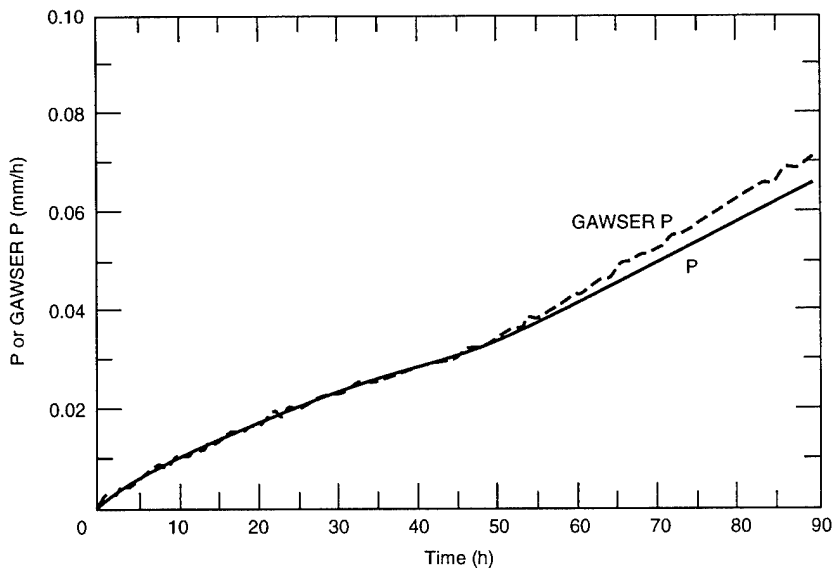

Figure 44. Behavior of percolation. GAWSER_P and P are nearly identical until 46 hours when GAWSER_P begins to increase more rapidly than P. The divergence between GAWSER_P and P beginning at 46 hours is due to the divergence between SA_II and GAWSER_SA_II at 46 hours (see Fig. 43) because SA_II and GAWSER_SA_II are used to calculate P (eq 37) and GAWSER P (eq A.20 in Schroeter 1989) respectively.

difference between E and GAWSER_E (see Fig. 39). E decrements SA_II (see Fig. 18) and is less than GAWSER_E shortly before 45 hours; therefore, SA_II should be greater than GAWSER SA_II after 45 hours.

Figure 44 shows the differences and similarities between P and GAWSER P. Please note that P is also considered interflow in the GAWSER manual (Schroeter 1989). P and GAWSER_P are identical until 45 hours when GAWSER_P begins to increase slightly more than P. The difference between P and GAWSER_P is due to the difference between SA_II and GAWSER_SA_II since SA_II is used to calculate P (eq 37).

Routing results

The following figures compare the behavior of the GAWSER and Object-GAWSER linear reservoir, lag and route, and Muskingum structures. GAWSER and Object-GAWSER outputs were generated with inputs from a modified version of Lesson 3* not contained in the GAWSER manual. The variable called "hyd 223" represents the inflow hydrograph to the GAWSER structures. Other variables beginning with the letters "hyd" represent outflow hydrographs from the GAWSER structures. All other variables represent the inflow and outflow hydrographs for the Object-GAWSER structures.

Figure 45 shows the behavior of an Object-GAWSER linear reservoir relative to a GAWSER linear reservoir. INFLOW_5 and hyd 223 represent the inflow into each linear reservoir, while OUTFLOW_5 and hyd 823 represent outflow from each linear reservoir. INFLOW_5 and hyd 223 are identical while OUTFLOW_5 and hyd 823 are also identical; therefore, the Object-GAWSER linear reservoir directly replicates the GAWSER linear reservoir.

Figure 46 shows the behavior of the lag and route structure in Object-GAWSER. INFLOW_2 and hyd223 represent inflow to each lag and route structure while OUTFLW_2_LAG and hyd 825 represent the outflow from each lag and route structure. INFLOW_2 and hyd 223 are identical, while OUTFL_2_LAG and hyd 825 are also identical; therefore, the Object-GAWSER lag and route structure directly replicates the GAWSER lag and route structure.

* H.O. Schroeter, Schroeter and Associates, Guelph, Ontario, unpublished memorandum, 1994.

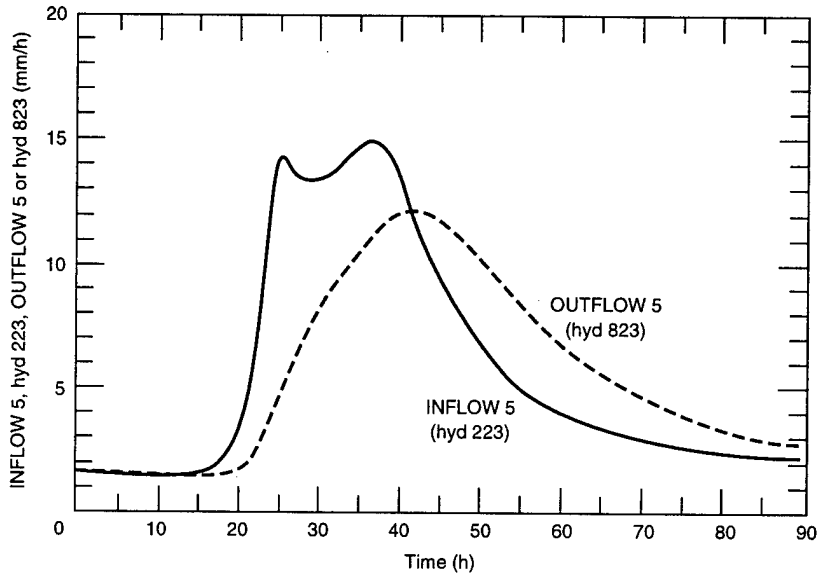

Figure 45. Behavior of a linear reservoir in Object-GAWSER. INFLOW_5 and OUTFLOW_5 represent the inflow to and outflow from the Object-GAWSER linear reservoir in the "SRFRNF" sector, and hyd 223 and hyd 823 represent the inflow to and outflow from the Fortran version of a linear reservoir. Linear reservoirs are accurately modeled in Object-GAWSER because the inflow and outflow curves match are identical.

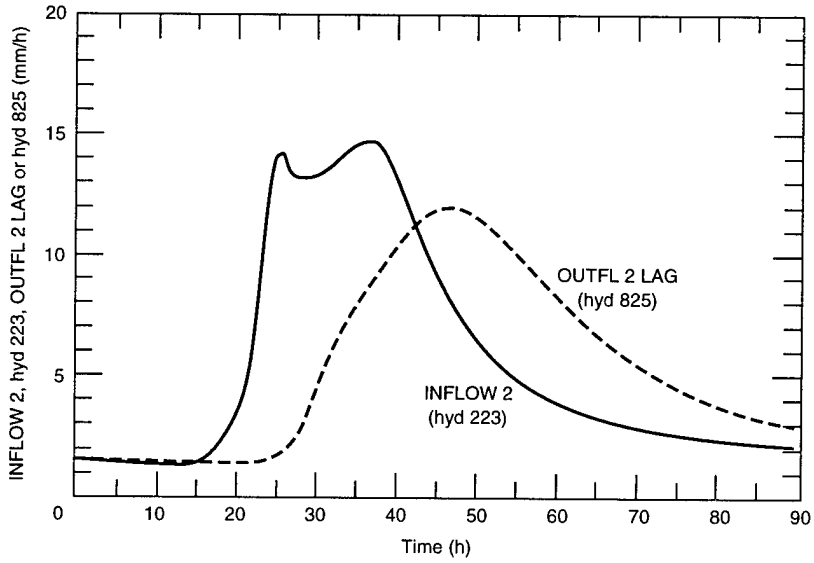

Figure 46. Lag and route structure. INFLOW_2 and OUTFLOW_2_LAG represent inflow to and outflow from the lag and route structure in the "SRFRNF" sector of Object-GAWSER. hyd 223 and hyd 825 represent inflow to and outflow from the lag and route structure in GAWSER. The lag and route structure in Object-GAWSER is accurately modeled because both inflow and outflow curves are identical.

Figure 47 shows the behavior of the Muskingum structure. CHNL_INFLW and hyd 223 represent the inflow while CHNL_OUTFLW and hyd 824 represent the outflow from the Muskingum structure. CHNL_INFLW and hyd 223 are identical while CHNL_OUTFLW and hyd 824 are also identical; therefore, the Object-GAWSER Muskingum structure directly replicates the GAWSER Muskingum structure.

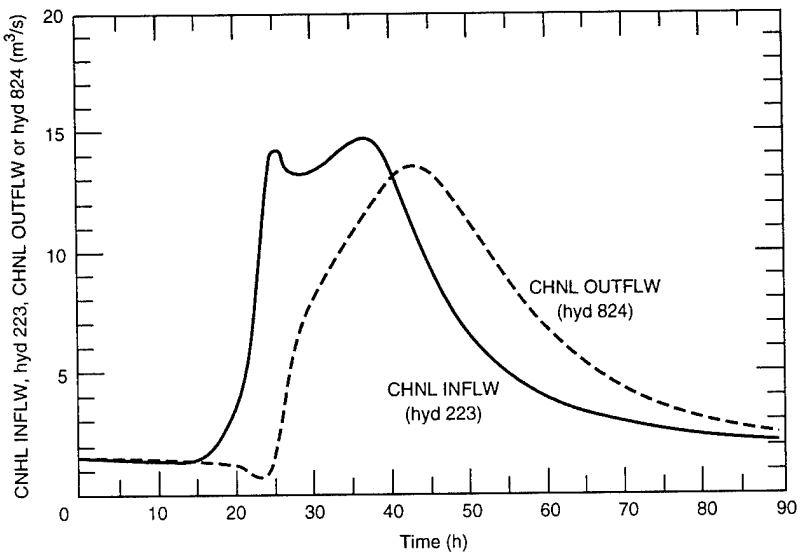

Figure 47. The Muskingum structure. CHNL_INFLW and CHNL_OUTFLW represent inflow to and outflow from the Muskingum structure located in the "CHNLRTNG" sector in Object-GAWSER. hyd 223 and hyd 824 represent the inflow to and the outflow from the lag and route structure in the Fortran version of GAWSER. The Muskingum structure is accurately modeled in Object-GAWSER because the inflow and outflow curves are identical.

CONCLUSION

A training guide and technical documentation have been written for a beta version of Object-GAWSER, a near replication of the Guelph All-Weather Storm-Event Runoff model (GAWSER) (Schroeter 1989). Object-GAWSER was created using an object-oriented platform and is composed of 12 interconnected sectors that simulate the hydrologic processes that occur in bare, partially snow-covered, and completely snow-covered, watersheds. The training guide contains programming instructions for Object-GAWSER and modeling strategies for different kinds of watersheds. The technical documentation describes each of the 12 sectors in Object-GAWSER and how they are linked. The technical documentation also provides graphical comparisons of Object-GAWSER and GAWSER outputs.

A user interface consisting of a data inputs sector and an outputs sector is described in the training guide. The data inputs sector contains the objects which must be programmed to run Object-GAWSER. The outputs sector contains graphs and tables with which the major hydrologic processes that occur in watersheds can be examined. Graphs demonstrate general behavior while the tables provide hourly numeric values. The hydrologic processes shown in the outputs sector are the liquid water released from the snowpack, infiltration, surface runoff, subsurface flow, baseflow, and discharge (from the watershed outlet).

Comparison of sample outputs from GAWSER (5.4) and Object-GAWSER indicates that the variables in the two models behave almost identically, except for those that calculate snowpack density and infiltration.

The misbehavior of those variables that calculate snowpack density is due to the effect of large temperature fluctuations on those variables that calculate density. Large temperature fluctuations cause slight miscalculations of snowpack density in Object-GAWSER. For example, the GAWSER (5.4) and Object-GAWSER estimations of density diverge upon a large temperature fluctuation beginning at 26 and ending at 36 hours (Fig. 34).

The relationship between snowpack density and air temperature should be modified to improve density calculations in Object-GAWSER. This relationship will be improved once the order of oper-

ations shown in Figure A.2 of the GAWSER manual is fully programmed in Object-GAWSER. For example, Figure A.2 shows that density is not calculated while the air temperature is above freezing. But, in Object-GAWSER, density is calculated for above freezing temperatures.

To improve infiltration calculations in Object-GAWSER, the hourly value of TINF must be 94 estimated differently. For example, the difference in magnitude between peaks of F and GAWSER_F in Figure 38 was improved by varying the initial value of TINF. Furthermore, an investigation of the computational differences between Object-GAWSER and GAWSER should reveal better computational methods for calculating infiltration.

Major outputs, such as the liquid water released from the snowpack (LIQ_WTR_REL) and percolation (P), are almost identical to their counterparts in GAWSER. Therefore, the discrepancies between snowpack density and infiltration estimates in Object-GAWSER and GAWSER (5.4) do not detract from the overall accuracy of Object-GAWSER.

This version of Object-GAWSER has not been calibrated to any actual watershed and is therefore only useful for instructive purposes and general estimates. A new, calibrated version that distributes snowmelt among three different cover types is currently being developed by the author.

Object-GAWSER provides insight into watershed hydrology by enabling its users to visualize hydrologic processes. With its animated objects, graphs and tables, users can observe the storage and transport of water in watersheds. Furthermore, sensitivity analyses are easily performed within its object-oriented environment. For example, users can change the value of any component of Object-GAWSER and watch its outputs unfold over time with its graphs and tables. Therefore, the dynamic simulation capabilities of Object-GAWSER show that it is a valuable tool for understanding hydrologic processes.

LITERATURE CITED

Chang, Chent-Nan, E.S. Da Motta and A.D. Koussis (1983) On the mathematics of storage routing. *Journal of Hydrology*, **61**: 357–370.

Chard, H.P. (1983) A model of spatially-variable runoff from snowmelt and rain on agricultural watershed. M.Sc. thesis (unpublished), School of Engineering, University of Guelph.

Dooge, J.C.I. (1973) Linear theory of hydrologic systems. U.S. Department of Agriculture, Agricultural Research Service, Technical Bulletin 1408.

Ghate, S.R. and H.R. Whitely (1982) GAWSER–A modified HYMO model incorporating areally-variable infiltration. *Transactions of the ASME*, **25**(1): 134–142.

Haan, C.T., H.P. Johnson and D.L. Brakenseik (1982) Hydrologic modeling of small watersheds. American Society of Agricultural Engineers, Monograph No. 5.

Holtan, H.N., G.J. Stilther, W.H. Henson and N.C. Lopenz (1975) USDAHL-74: Revised model of watershed hydrology. Technical Bulletin 1518, Agricultural Research Service, U.S. Dept of Agriculture.

McKim, H. L., E. A. Cassell and P.J. LaPotin (1993) Water resource modeling using remote sensing and object-oriented simulation. *Hydrological Processes*, **7**: 153–165.

Mein, R.G., and C.L. Larson (1973) Modeling infiltration during a steady rain. *Water Resources Research*, **9**(2): 60-378.

Nash, J.E. (1959) A note on the Muskingum flood routing method. *Journal of Geophysical Research*, **64**(8): 1053–1056.

Richmond, B. and S. Peterson (1994) STELLA II. Technical documentation. High Performance Systems, Hanover, New Hampshire.

Schroeter, H. (1988) An operational snow accumulation–ablation model for area distribution of shallow ephemeral snowpacks. Ph.D. Thesis (unpublished). School of Engineering, University of Guelph.

Schroeter, H. (1989). GAWSER Training Guide and Reference Manual. School of Engineering, University of Guelph, Ontario, Canada.

Veissman, W., J.W. Knapp, G.L. Lewis and T.E. Harbaugh (1989) *Introduction to Hydrology*. New York: Harper Collins Publishers, 3rd Edition.

Watt, E.W. (1989) Hydrology of floods in Canada: A guide to planning and design. Associate Committee on Hydrology, National Research Council of Canada.

APPENDIX A: SAMPLE INPUT PARAMETER VALUES

The following input parameters were used for a rainfall/snowmelt event in the Lutteral Creek Watershed of southwestern Ontario (Schroeter 1989).

Input parameter	*Initial condition*	*Input parameter*	*Initial condition*
A	0.1	IMC_IIs	0.3
B	96	IMC_IIs_2	0.25
BARE	0.0	ILWC	0.0
CSs	1.4	INIT_IMP_STOR	0.0
CSs_2	4	INIT_STOR	0.0
DA	63	ISDEP	232.0
Ds	1	ISWC	46.8
Ds_2	4	K	10
DS_IMPs	0.0	KEFFs	2
DSs	0.0	KEFFs_2	6
DSs_2	5	KGW	576
EDAY	0.0	KMs	10
FATR	0.95	KOs	6.5
FATR_2	0.05	KO_SWITCH	1
FATR_3	0.15	KSSs	5
FATR_4	0.85	MRHO	0.35
FCAP_I	0.3	NEWDEN	0.1
FCAP_I_2	0.25	NZONE	3
FCAP_II	0.3	PCT_1	0.03
FCAP_II_2	0.25	PCT_2	0.22
FCS	0.3	PCT_3	0.75
FD	0.35	SAVs	200
FDs	1.0	SAVs_2	200
FIMC_I	1.6	SMC_I	0.6
FIMC_II	1.0	SMC_I_2	0.55
FKEFF	0.065	SMC_II	0.6
FKMF	0.5	SMC_II_2	0.55
FKO	1.5	QB	6.38
FKSS	1	QSS	2.13
FRAIN	1	RAINs	0.0
FSAV	1	SNOWs	0.0
FSNOW	1	SWI	0.07
FTEMP	1	TEMPs	-0.4
H_I	100	TLO	5
H_I_ 2	100	TMC	5
H_II	300	TOC	15
H_II 2	500	WILT_I	0.2
H_II_3	600	WILT_I_2	0.12
H_II 4	1000	WILT_II	0.2
IMC_Is	0.3	WILT_II_2	0.12
IMC_Is_2	0.25	X	0.3

REPORT DOCUMENTATION PAGE

Form Approved
OMB No. 0704-0188

Public reporting burden for this collection of information is estimated to average 1 hour per response, including the time for reviewing instructions, searching existing data sources, gathering and maintaining the data needed, and completing and reviewing the collection of information. Send comments regarding this burden estimate or any other aspect of this collection of information, including suggestion for reducing this burden, to Washington Headquarters Services, Directorate for Information Operations and Reports, 1215 Jefferson Davis Highway, Suite 1204, Arlington, VA 22202-4302, and to the Office of Management and Budget, Paperwork Reduction Project (0704-0188), Washington, DC 20503.

1. AGENCY USE ONLY (Leave blank)

2. REPORT DATE
February 1996

3. REPORT TYPE AND DATES COVERED

4. TITLE AND SUBTITLE
Object-GAWSER: Object-Oriented Guelph All-Weather Storm-Event Runoff Model
Phase I: Training Manual
Application of Object-Oriented Simulation to Hydrologic Modeling

5. FUNDING NUMBERS

6. AUTHORS

John A. Hinckley, Jr.

7. PERFORMING ORGANIZATION NAME(S) AND ADDRESS(ES)

Remote Sensing/GIS Center
U.S. Army Cold Regions Research and Engineering Laboratory
72 Lyme Road
Hanover, New Hampshire 03755-1290

8. PERFORMING ORGANIZATION REPORT NUMBER

Special Report 96-4

9. SPONSORING/MONITORING AGENCY NAME(S) AND ADDRESS(ES)

Office of the Chief of Engineers
Washington, D.C. 20314-1000

10. SPONSORING/MONITORING AGENCY REPORT NUMBER

11. SUPPLEMENTARY NOTES

12a. DISTRIBUTION/AVAILABILITY STATEMENT

Approved for public release; distribution is unlimited.

Available from NTIS, Springfield, Virginia 22161.

12b. DISTRIBUTION CODE

13. ABSTRACT (*Maximum 200 words*)

Hydrologic models are currently used to understand the economic and ecological imacts of hydrologic processes. A new hydrologic model entitled Object-GAWSER was designed using an object-oriented platform to provide new insights into watershed hydrology. Object-GAWSER is a temperature index model that simulates upland watershed hydrology. Object-GAWSER is different from other hydrologic models in that each one of its components can be easily studied to understand its sensitivity to various inputs. First, this report will show how Object-GAWSER can be used to simulate the hydrologic behavior of forested, agricultural, and suburban watersheds. Second, this report will describe how Object-GAWSER was designed.

14. SUBJECT TERMS
Hydrologic models
Object-oriented programming
Watersheds

15. NUMBER OF PAGES
62

16. PRICE CODE

17. SECURITY CLASSIFICATION OF REPORT	18. SECURITY CLASSIFICATION OF THIS PAGE	19. SECURITY CLASSIFICATION OF ABSTRACT	20. LIMITATION OF ABSTRACT
UNCLASSIFIED	UNCLASSIFIED	UNCLASSIFIED	UL