N-90375X

AD-A286 652

GENERAL CONSIDERATIONS FOR SATELLITE ATTITUDE CONTROL SYSTEMS

by

John S. White and James S. Pappas
National Aeronautics and Space Administration

DTIC
ELECTE
AUG 05 1994
S G D

Accesion For
NTIS CRA&I ☒
DTIC TAB ☐
Unannounced ☐
Justification
By
Distribution /
Availability Codes
Dist | Avail and / or Special
A-1

Presented at the
IAS 29th Annual Meeting
New York, New York
January 23-25, 1961

RECEIVED
SEP 11 1961
NASA - FRC LIBRARY

IAS Paper No. 61-19

~~Member Price - $0.50~~
~~Nonmember Price - $1.00~~

[redacted]

94 8 04 036

94-24719

12pg

DTIC QUALITY INSPECTED 1

IAS PAPERS are made available through the facilities of the Sherman M. Fairchild Publication Fund as a special service to IAS members. They are photo-offset directly from the authors' manuscripts and are supplied to members at cost. ALL PUBLICATIONS RIGHTS RESERVED BY THE INSTITUTE OF THE AEROSPACE SCIENCES, 2 E. 64th St., New York 21, N.Y.

N-90375X

Best
Available
Copy

Paper for presentation at IAS meeting
New York City, January 1961

GENERAL CONSIDERATIONS FOR SATELLITE ATTITUDE CONTROL SYSTEMS

By John S. White* and James S. Pappas*

National Aeronautics and Space Administration
Ames Research Center
Moffett Field, Calif.

The first several satellites that were launched required no control of their orientation in space. The principal problem was to get the payload in orbit; the experiments aboard were concerned with measurement of the scalar magnitude of environmental conditions, making satellite attitude relatively unimportant. What attitude control was required was obtained by spinning the vehicle so that it behaved in its entirety as a gyroscope, maintaining its spin axis in a fixed orientation with respect to inertial space. TIROS, the first weather satellite, was stabilized in this manner. As a result, the pictures were often taken at oblique angles, and after a period of time the axis orientation shifted with respect to the earth so that no daylight pictures could be taken.

Some of the newer satellites, however, require much more sophisticated orientation or attitude control so that the vehicle will continuously look at its target. For instance NIMBUS, the second generation weather satellite, is required to point continuously at the earth. It is desired that the satellite maintain its optical axis within 1° of the local vertical and that an orthogonal axis lie in the orbital plane with the same accuracy requirement.

The proposed Orbiting Astronomical Observatory, or OAO, requires a different and more precise attitude control. For this satellite, the experiments consist of a study of the stars and other heavenly bodies. The majority of the experiments require that the OAO point at the target with an accuracy between 1 minute of arc and 1 second of arc. However, in some cases a pointing accuracy of 0.1 second of arc is required.

At Ames Research Center we have done a considerable amount of research on attitude controls both for pointing at the earth and for pointing in a fixed direction with respect to inertial space. These two types of pointing requirements present different problems, and a discussion of the differences between the two problems is in order at this point.

The orientation of NIMBUS, slaved to the local vertical, is such that it rotates about its pitch axis at the orbital rate. Since this is so, the vehicle as a whole behaves like a gyroscope, with its momentum vector perpendicular to the plane of the orbit. Thus any torques, such as the roll torque due to gravity gradient, which act on this momentum vector will cause precession of the vehicle, so that the response of the system is coupled in the roll-yaw plane. However, the pitch axis is uncoupled, and can be considered separately. The situation in this respect is similar to an aircraft, in which motions in the plane of symmetry can be treated separately from motions out of this plane.

An attitude control system may be designed to utilize this roll-yaw coupling, so as to reduce momentum storage requirements, or it may be designed such that the coupling is considered simply an extraneous torque.

The OAO, on the other hand, has an orientation which is independent of its orbital motion, and in fact is essentially inertially fixed. As a result the gyroscopic coupling is negligible and the system can be designed as three single-axis systems, with cross-coupling as an undesirable disturbance. Actually the vehicle is not inertially fixed. The direction of the line of sight will move very slowly in space for a variety of reasons. For example, the velocity of the satellite in orbit around the earth is sufficient to create a velocity aberration effect, with a maximum magnitude of 0.3 second of arc/minute. With a 0.1 second

*Aeronautical Research Scientist

of arc accuracy requirement and three minute exposure times, this effect is very noticeable. In addition to this, when the vehicle is pointing at objects inside the solar system, the parallax effect, resulting from motion around the earth, is important, as is the angular velocity of the line of sight due to motion of both the earth and the target.

The two types of satellites must also cope with external torques, such as those due to gravity gradient, solar radiation pressure, aerodynamic drag, and those resulting from interaction with the earth's magnetic field. The system may be designed so as to make these torques beneficial, or may be designed to minimize their magnitude.

A very generalized block diagram of one axis of an uncoupled satellite attitude control system is shown in Fig. 1. The principal components of the system are: a sensor, to detect deviations of the tracking line from the line of sight, a torquer, which is used to change the satellite orientation, and a compensation device, which is used to provide the necessary damping. The satellite is also included on the diagram.

The over-all system can be designed with a relatively rapid response, so that the errors resulting from external torques, T_d, and from the required angular velocity of the line of sight will be kept small. Furthermore, it is assumed that the sensor will have for an output a voltage which is roughly linear, and undoubtedly limited.

The torquer is the muscle of the system, and will usually have either of two transfer functions: a constant, or a differentiation plus lag. In addition, its output will be limited at some maximum value.

Torquers which have a constant as the transfer function are units, such as gyros, jets, current loops interacting with the earth's magnetic field, or motor-flywheel combinations in which the motor has a flat torque-speed curve. In the

system shown in Fig. 2, the sensor and torquer transfer functions are gains K_e and K_t, respectively, and the satellite transfer function, for zero products of inertia, is $1/J_b s^2$.

When this system is called upon to counter a constant external torque, T_d, it must put out a constant torque, which in turn requires a constant error from the sensor. However, if the gain of the torquer is sufficiently high, this error can be maintained small enough to be within the accuracy requirements.

When the line of sight is moving, there must be a pulse of torque to rotate the tracking line, but no steady-state torque is required. However, if the compensation device has a steady-state output, then the output from the sensor must also have a steady-state component. Again, the system can be designed to make this error sufficiently small.

It should be noted that the system as described is undamped, and that the compensation shown must be added to provide adequate damping.

One example of this type of torquer is a current loop whose magnetic field interacts with that of the earth. In order to study such a system, it is necessary to know the components of the earth's magnetic field at the satellite, as a function of time, expressed in terms of a coordinate system rigidly attached to the satellite.

An analog computer study of the earth's magnetic field was made to determine the variation of these components with time. Fig. 3 shows a representative sample of the variation of the earth's magnetic field at the satellite for a circular orbit with a 96-minute period; B_x, B_y, and B_z are the components of the field in satellite body coordinates, and are plotted in terms of B_{ref}. This is defined as the magnitude of the field directly over the magnetic pole at the orbital altitude and will be about 1/4 gauss. Two general conclusions were drawn from this and other similar data. First, the field varies slowly in a regular fashion,

and second, the period of the variations is from 1/2 to 3/4 the orbital period with an additional component at earth's rotational period.

Fields such as those indicated were then used to study the behavior of a control system which utilizes the earth's magnetic field. The performance of the magnetic system was shown to be representative of the behavior of all systems with the constant gain torquer. The settling time from an initial error of 1 minute of arc until the error was less than 0.1 second of arc was on the order of 1 minute. The current requirement was on the order of 5 to 10 ampere turns.

The general expression for torque from these current loops is $T = \overline{nIA \times B}$, where n is the number of turns, I the current, $\bar{A}$ a vector representing the area of the coil, and $\bar{B}$ a vector representing the earth's magnetic field. If we assume three orthogonally oriented coils with identical products, the components of torque can be written out as shown in Fig. 4. It is possible to control the values of I so that T_y and T_z will be certain specified values, such as proportional to the y and z error. However, T_x will then, in general, have some value, resulting in roll about the line of sight. In some cases this roll may not be objectionable. The required values of I are functions of B_x, B_y, and B_z, so that the vehicle must have magnetometers aboard to measure these components. However, since the measurements of the field control the gain of the forward path of a closed loop system, extreme accuracy is not required.

A special problem exists if $B_x = 0$. Under this condition the torque equations are as shown on the lower part of Fig. 4, where it can be seen that I_x is the only variable in both the y and z torque expressions. Thus only one of these torques can be specified, and the other will follow along.

Let us consider the particular case in which we desire to point the vehicle directly at the first point of Aries (as shown in Fig. 5), and the vehicle is at an orbit position such that the magnetic field has a declination of 90° (perpendicular to the desired pointing direction). A torque can be obtained which will

correct errors in declination, but no torque can be developed which will correct errors in right ascension since there can be no torque developed about the magnetic vector. Thus when B_x (the component of B along the tracking line) goes to zero, control can be maintained about only one axis (not necessarily a vehicle axis). Also, when $B_x = 0$, the current required to develop a desired T_y and T_z, as obtained from the equations on the upper part of Fig. 4, may go to infinity, and must therefore be limited.

This condition of $B_x = 0$ and limited currents was studied on an a[illegible]m-puter where it was found that control would be regained in a matter of [illegible] Specifically, the settling time was changed from 1 to 3 minutes for the case where B_x started out very small but positive, passed through zero, and increased in the negative direction.

The second general type of torquer mentioned earlier (characterized by a transfer function having a differentiation plus lag) behaves differently. An example of this type of torquer is a motor-flywheel combination in which the motor is similar to a standard servomotor, with a linear torque-speed relationship. Fig. 6 is a block diagram of this system with the transfer function of the torquer shown as $K_t\tau_m S/(1 + \tau_m S)$. In general, the motor time constant, τ_m, will be large so that the torquer looks like a constant gain at the system natural frequency. Thus the high frequency response is identical to that of the system previously discussed, and is controlled by the compensation.

The system response to steady-state disturbances is quite different, however. If there must be a steady-state torque out of the motor to counter T_d, there must be an increasing voltage into the motor. This requires a constantly increasing error. Also, if the vehicle must rotate at constant speed to follow the motion of the line of sight, there must be a constant voltage into the torquer, coming from a constant error. Such a system can be designed with high enough torquer gain to insure that the error from both of these causes will remain less than the

specified value. Such a system was designed for the OAO, with a maximum tolerable error of 0.1 second of arc. The natural frequency is 2.2 radians/sec, with a settling time of 1-1/4 minutes from an initial 1 minute of arc error.

If error integration is added to the system, the loop gain can be considerably reduced for a given performance. However, this will have the serious disadvantage of lengthening both natural period and settling time.

Some compensation must be used to supply damping regardless of the type of torquer used. The three principal types of compensation which might be used are error-rate networks, rate gyros, and tachometers. The principal effect of the tachometer on a servomotor is to reduce both the equivalent motor gain and time constant. The reduction of the time constant increases the damping, while the reduction of the motor gain increases the steady-state error. This latter undesirable effect can be eliminated by putting a high pass filter on the tachometer output. However, the tachometer must be able to detect changes in wheel speed of less than 0.1 percent of full speed to provide the damping signal. This is a difficult requirement to meet and would seem to rule out the use of a tachometer.

Rate gyros may be used to advantage to provide damping. When there is a steady-state tracking line velocity, their use forces a constant error from the sensor. This error can be made sufficiently small, however. Rate gyros have the disadvantage of limited resolution, resulting in limit cycle oscillations, and limited lifetime.

The use of an error-rate network for compensation is the simplest technique and, since it produces no increases in error, appears to be the most promising.

Fig. 7 is the block diagram of an attitude control system using a large integrating gyro for both torquing and compensation. Since the time constant of the gyro is small compared to the system response time, only the steady-state characteristics of the gyro are shown. For the case of the OAO, the system will be

highly overdamped if a standard gyro with a C/H of unity is used. A value of 0.01 to 0.03 for C/H provides satisfactory damping for this case.

This configuration is relatively simple, since one unit provides both damping and power. Its lifetime would probably be limited by that of the gyro. It offers one additional advantage in that the vehicle is rate stabilized when the earth occults the target. To show the effect of this we can look at the change in pointing of the OAO satellite during a 30-minute period during which the target is occulted, and during which there is a steady 100 dyne cm torque acting on the vehicle. During this period an unstabilized satellite (that is, one without a target) will turn through about 1° and will have acquired a fairly large and increasing velocity whereas the gyro-stabilized vehicle will have turned only a minute or two, and will have reached a constant, considerably smaller, velocity.

We have done considerable experimental research on many of the previously discussed systems. We have used wheels, magnetic fields, and gyros for torquing, and error-rate networks and rate gyros for sensing. Since this experimental work was planned to supplement the analytical work on the OAO fine control system, the operation of the system was restricted to small angles.

Fig. 8 shows one of the experimental setups we have used. The round platform is supported on an air bearing which allows freedom of motion about all three axes. The light sensor consists of a telescope with a beam-splitting prism and four photomultipliers mounted near the focus. An artificial star, indicated as the light source, is tracked and any pointing errors are sent to the appropriate servomotor inertia-wheel combination. There is no control about the pitch axis.

Rate gyros have been used to damp this system, resulting in a limit cycle oscillation of about ±5 seconds of arc. This oscillation was caused by the threshold value of the rate gyro; that is, for very small angular oscillations, the rate gyro could not sense the associated changes in rate, and so provided no damping. The full scale of the rate gyro used was 10°/second.

Better results have been obtained using error-rate networks for damping. We have achieved a dynamic tracking accuracy of about 0.5 second of arc in the presence of random torques which were many times larger than that anticipated in space, but with control torques of the same size as would be used in space. This control accuracy has been achieved simultaneously in two axes, with no deleterious cross-coupling effects noticeable.

We have also used gyros to torque the platform. Fig. 9 shows an air-bearing platform with three gyros used for torquing. The light sensor and light source are essentially the same as previously described. The gyros are floated integrating gyros, with 10^7 cgs units of momentum and a C/H of about 0.03. This system has been working with a single degree of freedom, with a tracking accuracy of about 5 seconds of arc. The associated analog studies showed that this was the level of tracking accuracy to be expected with the random torques present, and that the tracking accuracy in space would be better than the required 0.1 second of arc.

For this system, as with all the other systems studied, the experimental work has agreed quite well with the analytical and analog work, thus verifying the correctness of the latter.

The previous discussion has assumed a linear system. We have also been studying bang-bang systems that use low thrust jets for satellite attitude control, again with the OAO as a specific example. For one system studied, the switching on and off of the jets was controlled by the error, plus an error-rate signal. Limit cycle operation resulted, of course. However, the period was about 1/2 minute, and the amplitude was less than the 0.1 second of arc specified. The fuel capacity required to maintain this limit cycle is about 3 pounds per axis per year, which is quite reasonable.

We have also been doing research on attitude control of earth-pointing vehicles using NIMBUS as an example. If such a system is designed with a tight

control loop, the system will behave in most details like the single-axis systems previously discussed. One difference, however, is that there is no simple instrument which will measure directly the heading angle ψ. One way would be to use a roll-rate gyro which has for its output a signal proportional to $\dot{\phi} - \omega_o\psi$. If $\dot{\phi}$ is kept small, this signal will indicate the value of ψ. However, $\dot{\phi}$ would probably not be negligible compared to $\omega_o\psi$, and so the ψ signal would in effect be very noisy.

Fig. 10 is a simplified block diagram of an earth-pointing system. The orbital rate term, ω_o, enters directly into the pitch control system, and affects the cross coupling of the roll-yaw systems. The torquer used may be any of the types previously discussed, and therefore is not specifically indicated. The difference between this system and the previous ones is the addition of the gravity torques as simple functions of the error useful in pointing. These torques can be used to desaturate the wheels continuously in the presence of other disturbing torques, to reduce any initial stored momentum to zero, and to provide a measure of static stability. In order to utilize these torques, the vehicle must be designed with the appropriate dumbbell stability and the desaturation time will be measured in terms of orbits. For NIMBUS, where the error requirement is 1°, and where the system might remain locked on continually following the initial lock-on, the gravity torque can be readily utilized to produce the acceptable desaturation time of several orbit periods.

Even if gravity torques make the vehicle inherently unstable, these torques can still be used to desaturate wheels.

These statements about gravity torques have all assumed that the vehicle is in a circular orbit, with constant orbital velocity. A vehicle in an elliptical

orbit will behave somewhat similarly, but since ω_o changes as a function of position in orbit, there will be additional oscillatory terms at orbital period in the system response.

The roll-yaw coupling, together with the gravity torques, can be utilized to provide considerable redundancy, and hence reliability, in a control system. If we assume a system originally designed with two wheels for torquers and two fairly large gyros for sensors, we find that with appropriate minor changes in the control system, any one of the four units (two wheels and two gyros) will be able to provide some measure of control.

On the other hand, the system can be originally designed so that only one wheel, or one gyro, is used for control in the roll-yaw plane. If this approach is used, the vehicle configuration should be designed to maximize the gravity torques, and minimize all other disturbance torques.

In the analysis of these systems, we have used standard servo techniques. However, where the pointing accuracies required are high, the system operation becomes nonlinear so that the theoretical analysis of system performance becomes difficult, and experimental verification of results becomes more important. Also, since the disturbing torques and controlling torques are low compared to the inertia of the over-all system, small nonlinearities and higher order terms must be carefully considered.

In conclusion, any of the types of systems considered here, that use either constant gain or a differentiating torquer, can be used to obtain satisfactory system operations. The choice among them must be based not only on system requirements, but also on other factors, such as power and weight.

LIST OF SYMBOLS

A	area of current coil
B	earth's magnetic field
C	damping constant of gyro
H	angular momentum of gyro
I	current in current coil
J_b	moment of inertia of satellite
K_e	gain of error sensor and amplifiers
K_t	gain of amplifier and torquing devices
n	number of turns in current coil
S	Laplace operator
T_d	disturbing torque
T	torque output of torquing device
τ_m	motor time constant
ψ	heading angle of earth pointing satellite about local vertical
φ	roll angle of earth-pointing satellite about a horizontal line in the orbital plane
ω_o	orbital rate

Subscripts

x, y, z	components of a vector along coordinate axes

SATELLITE ATTITUDE CONTROL SYSTEM

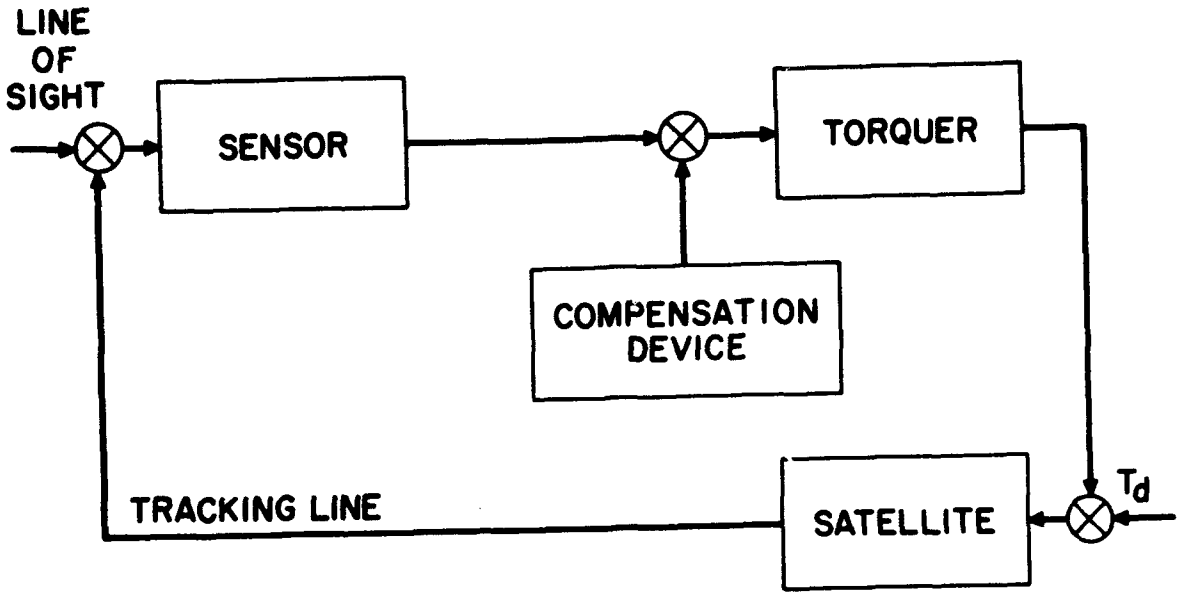

Figure 1.

SATELLITE ATTITUDE CONTROL SYSTEM USING CONSTANT GAIN TORQUER

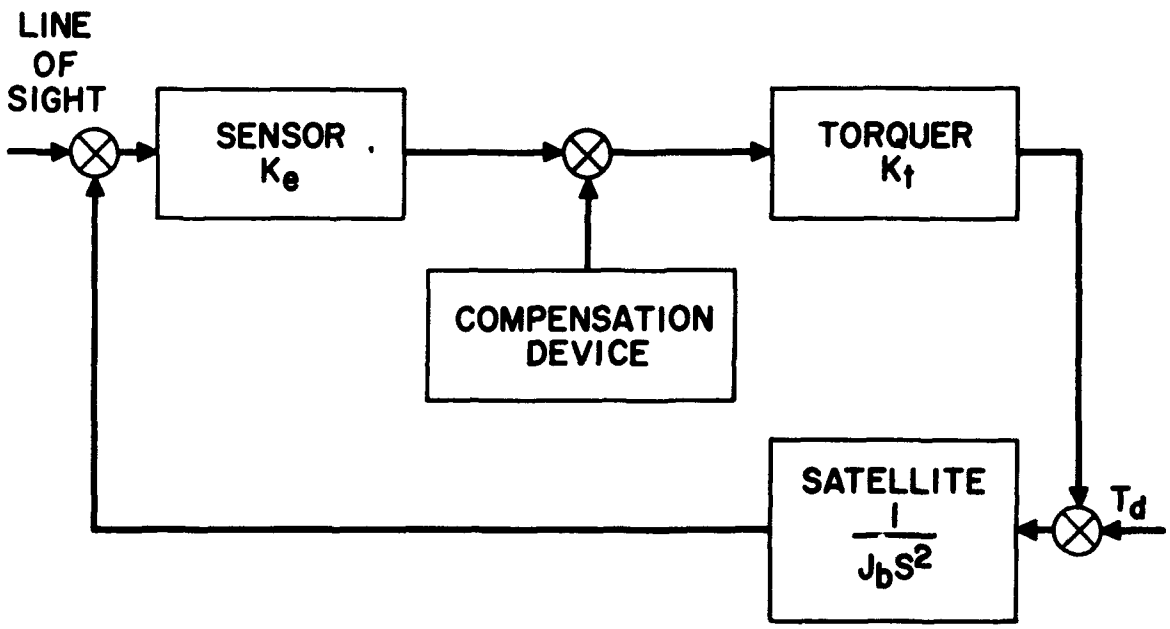

Figure 2.

VARIATION OF EARTH'S MAGNETIC FIELD AT SATELLITE

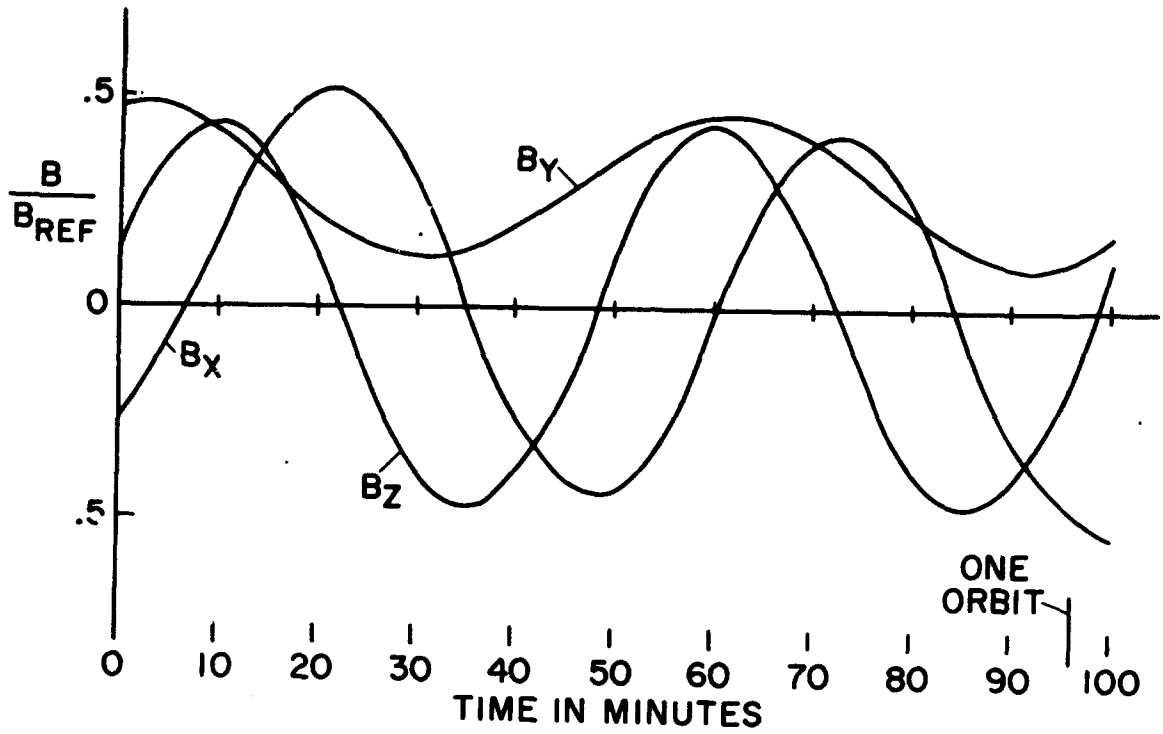

Figure 3.

TORQUE FROM CURRENT COILS

$$T = \overline{nIA} \times \overline{B}$$

$$\begin{bmatrix} T_x \\ T_y \\ T_z \end{bmatrix} = nA \begin{bmatrix} I_y B_z - I_z B_y \\ I_z B_x - I_x B_z \\ I_x B_y - I_y B_z \end{bmatrix}$$

IF $B_x = 0$

$$\begin{bmatrix} T_x \\ T_y \\ T_z \end{bmatrix} = nA \begin{bmatrix} I_y B_z - I_z B_y \\ -I_x B_z \\ -I_x B_y \end{bmatrix}$$

Figure 4.

SPECIAL CASE WHERE ALL ERROR CANNOT BE CORRECTED

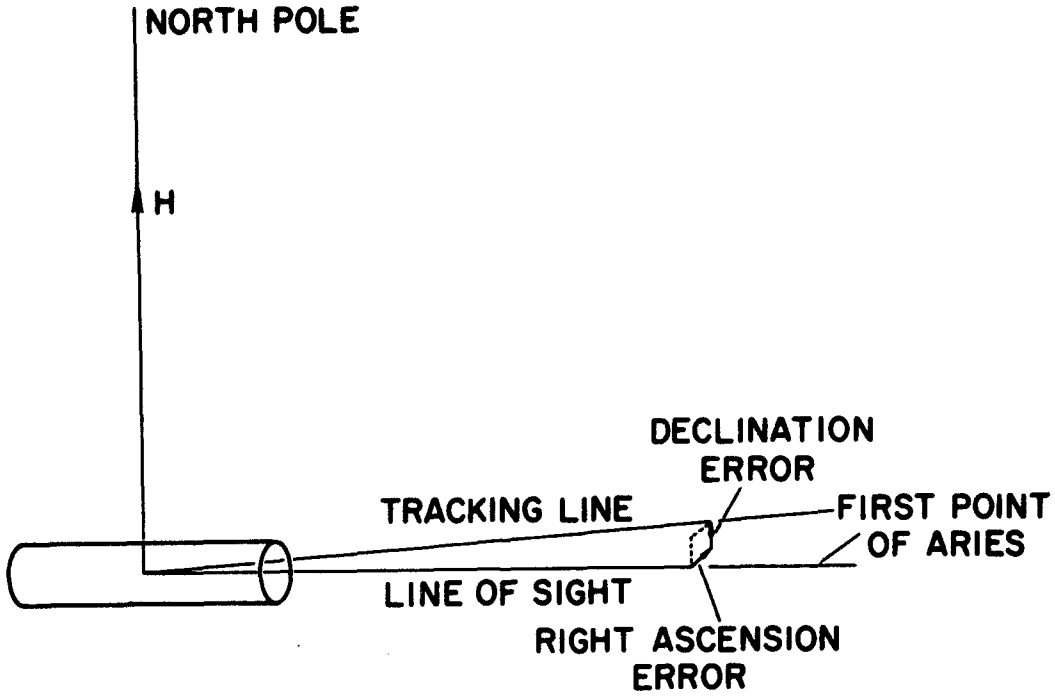

Figure 5.

SATELLITE ATTITUDE CONTROL SYSTEM USING SERVO MOTOR TORQUER

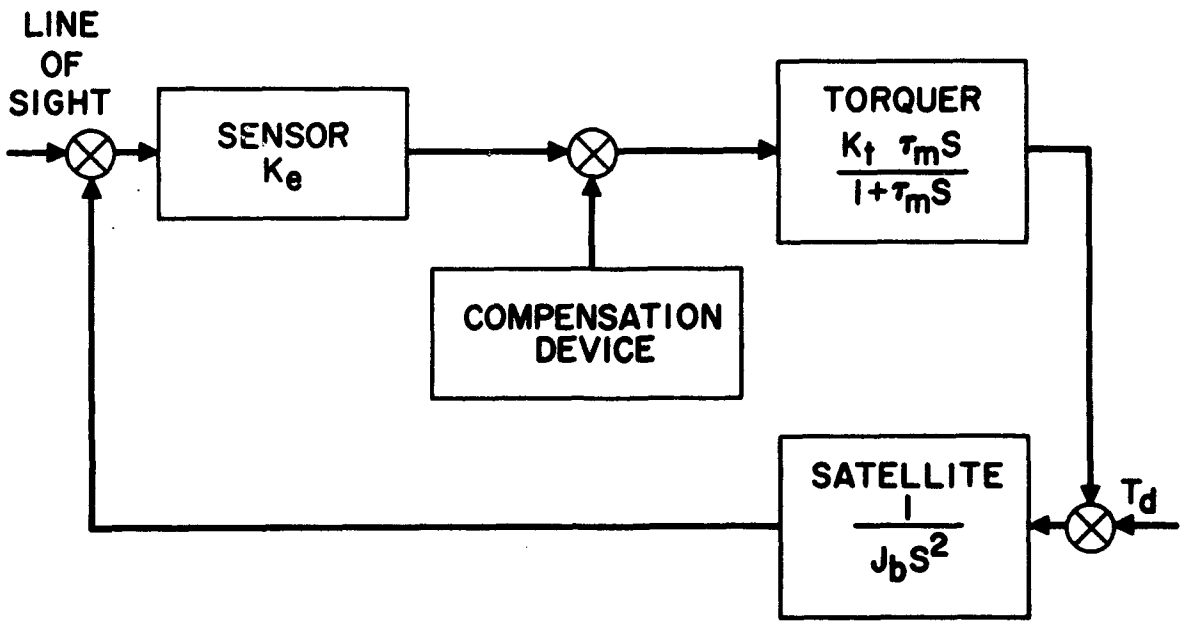

Figure 6.

HARGE OUT DATE
SEP 2 2 1961

ATTITUDE CONTROL SYSTEM USING GYRO TORQUING

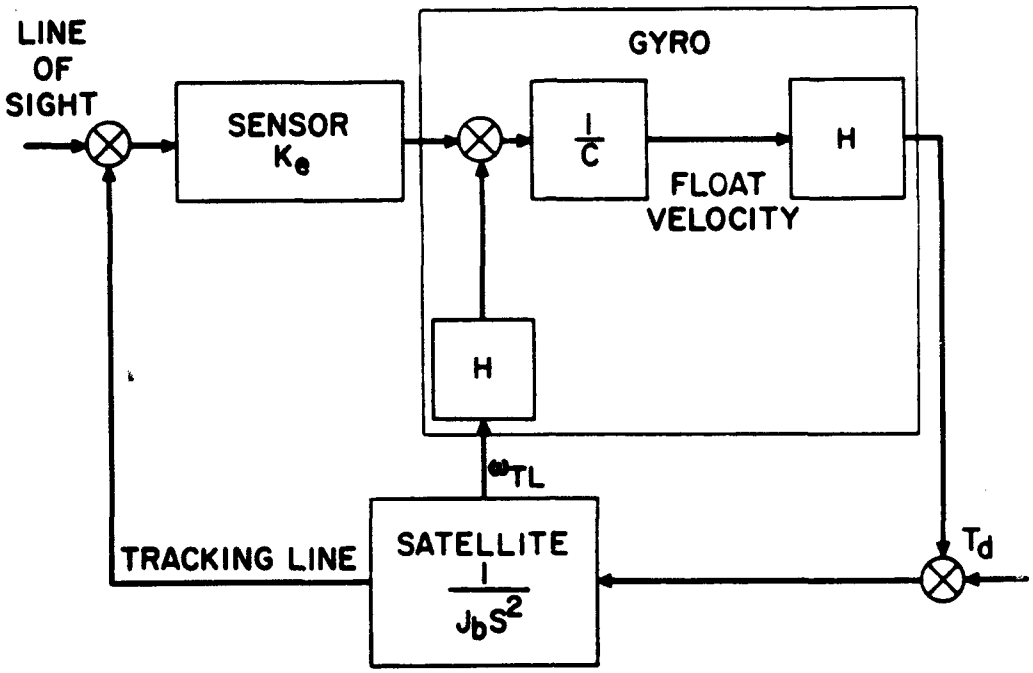

Figure 7.

A-26244.1

SATELLITE ATTITUDE CONTROL TEST PLATFORM WITH INERTIA WHEELS

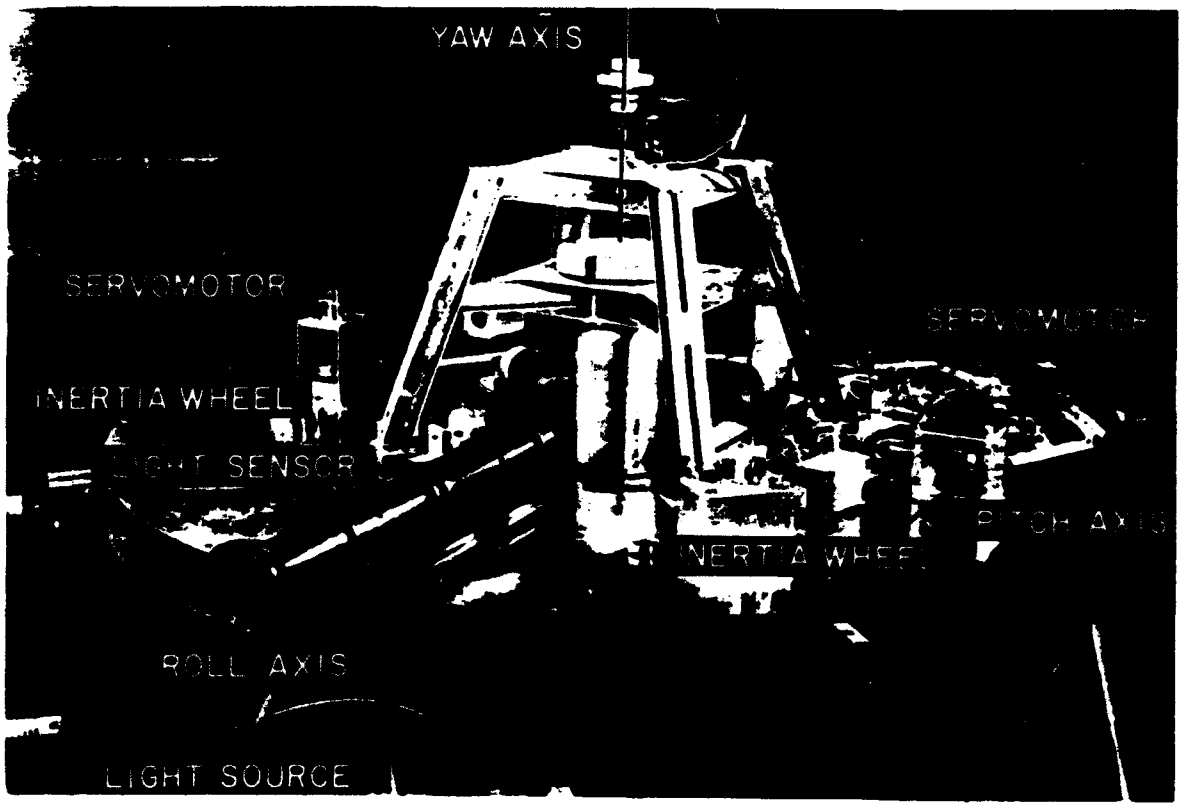

Figure 8

A-27204.1

SATELLITE ATTITUDE CONTROL TEST PLATFORM WITH GYROS

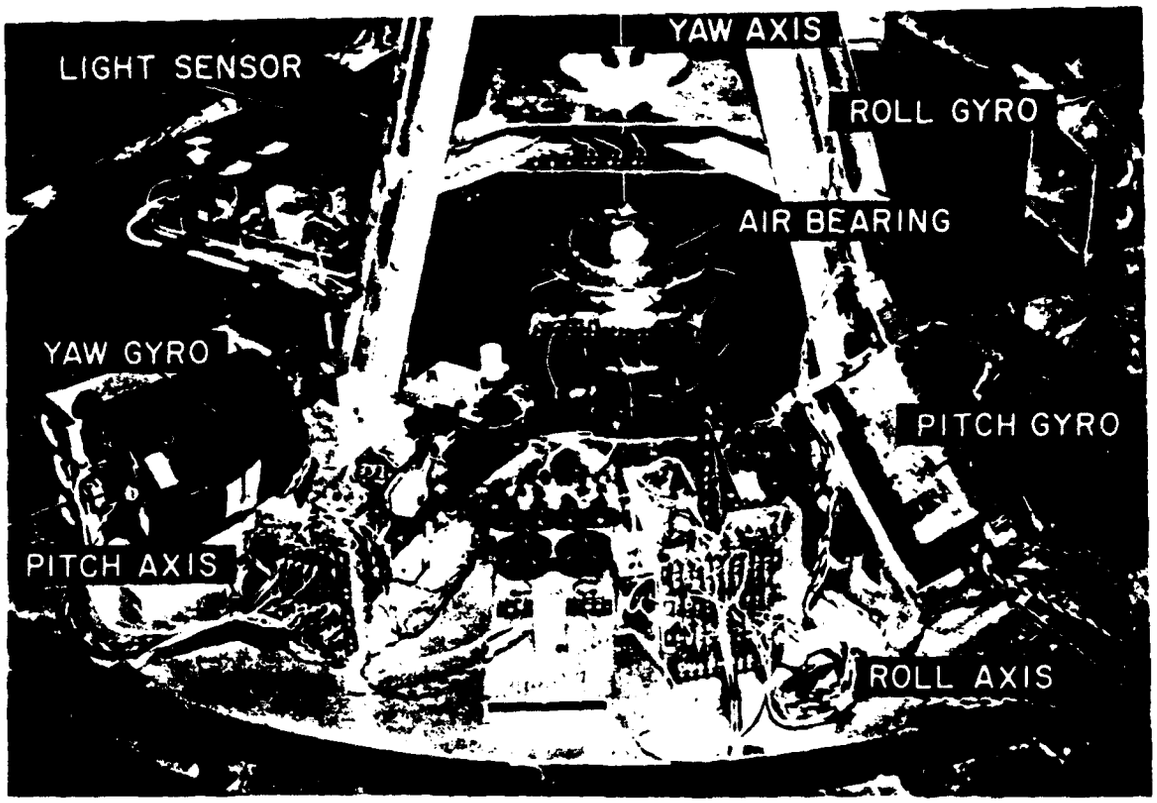

Figure 9

SATELLITE ATTITUDE CONTROL SYSTEM UTILIZING GRAVITY TORQUES

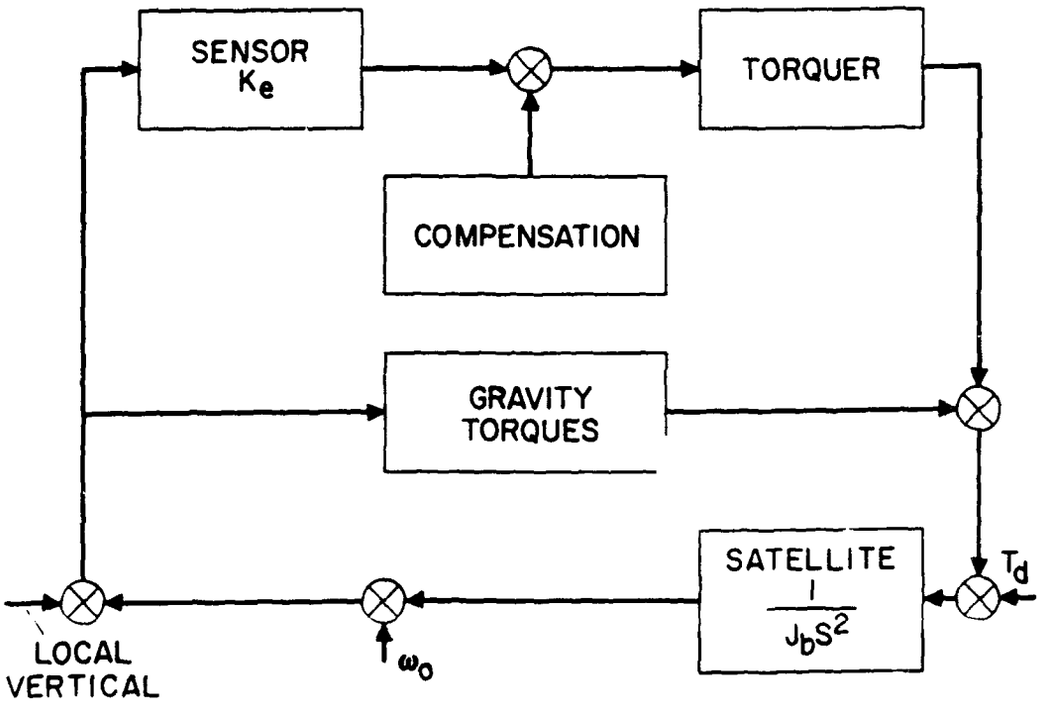

Figure 10.