AD-A284 368

NPS-MA-94-006

NAVAL POSTGRADUATE SCHOOL

Monterey, California

DTIC
ELECTE
SEP 09 1994
S G D

ANALYTICAL TRIPPING LOADS FOR STIFFENED PLATES

by

D.A. Danielson

Technical Report For Period
October 1993 - December 1993

Approved for public release; distribution unlimited

Prepared for: Naval Postgraduate School
Monterey, CA 93943

94-29296

NAVAL POSTGRADUATE SCHOOL
MONTEREY, CA 93943

Rear Admiral T.A. Mercer
Superintendent

Harrison Shull
Provost

This report was prepared in conjunction with research conducted for the Naval Postgraduate School and funded by the Naval Postgraduate School.

Reproduction of all or part of this report is authorized.

This report was prepared by:

D.A. Danielson

D.A. Danielson
Professor of Mathematics

Reviewed by:

Richard Franke

RICHARD FRANKE
Chairman

Released by:

P.J. Marto

PAUL J. MARTO
Dean of Research

Unclassified
SECURITY CLASSIFICATION OF THIS PAGE

REPORT DOCUMENTATION PAGE

Form Approved OMB No 0704-0188

1a REPORT SECURITY CLASSIFICATION Unclassified	1b RESTRICTIVE MARKINGS
2a SECURITY CLASSIFICATION AUTHORITY	3 DISTRIBUTION / AVAILABILITY OF REPORT Approved for public release; distribution unlimited
2b DECLASSIFICATION / DOWNGRADING SCHEDULE	
4 PERFORMING ORGANIZATION REPORT NUMBER(S) NPS-MA-94-006	5 MONITORING ORGANIZATION REPORT NUMBER(S) NPS-MA-94-006
6a NAME OF PERFORMING ORGANIZATION Naval Postgraduate School 6b OFFICE SYMBOL (If applicable) MA	7a NAME OF MONITORING ORGANIZATION Naval Postgraduate School
6c ADDRESS (City, State, and ZIP Code) Monterey, CA 93943	7b ADDRESS (City, State, and ZIP Code) Monterey, CA 93943
8a NAME OF FUNDING / SPONSORING ORGANIZATION Naval Postgraduate School 8b OFFICE SYMBOL (If applicable) MA	9 PROCUREMENT INSTRUMENT IDENTIFICATION NUMBER OM.N
8c ADDRESS (City, State, and ZIP Code) Monterey, CA 93943	10 SOURCE OF FUNDING NUMBERS PROGRAM ELEMENT NO / PROJECT NO / TASK NO / WORK UNIT ACCESSION NO

11 TITLE (Include Security Classification)
Analytical Tripping Loads for Stiffened Plates

12 PERSONAL AUTHOR(S)
D.A. Danielson

13a TYPE OF REPORT	13b TIME COVERED	14 DATE OF REPORT (Year, Month, Day)	15 PAGE COUNT
Technical	FROM 10-93 TO 1-94	11 June 94	14

16 SUPPLEMENTARY NOTATION

17 COSATI CODES			18 SUBJECT TERMS (Continue on reverse if necessary and identify by block number)
FIELD	GROUP	SUB-GROUP	Buckling behavior, axial compression, Von Kármán plate equations, rectangular tripping

19 ABSTRACT (Continue on reverse if necessary and identify by block number)

The subject of this paper is the buckling behavior of a rectangular plate, with parallel thin-walled stiffeners attached to one side, subjected to a combination of axial compression, lateral pressure, and bending moment. The plate is modeled by the Von Kármán plate equations and the stiffeners by a nonlinear beam theory recently derived. An analytical solution is obtained for the buckling load corresponding to a torsional tripping mode of the stiffeners. The effects of various boundary conditions, imperfections, and residual stress are included.

DTIC QUALITY INSPECTED 3

20 DISTRIBUTION / AVAILABILITY OF ABSTRACT X ☐ UNCLASSIFIED/UNLIMITED ☐ SAME AS RPT ☐ DTIC USERS	21 ABSTRACT SECURITY CLASSIFICATION Unclassified
22a NAME OF RESPONSIBLE INDIVIDUAL D.A. Danielson	22b TELEPHONE (Include Area Code) 408-656-2622 22c OFFICE SYMBOL MA/Dd

DD Form 1473, JUN 86 Previous editions are obsolete SECURITY CLASSIFICATION OF THIS PAGE

S/N 0102-LF-014-6603

ANALYTICAL TRIPPING LOADS FOR STIFFENED PLATES

D. A. Danielson
Mathematics Department
Naval Postgraduate School
Monterey, CA 93943

January, 1994

Accesion For
NTIS CRA&I ☑
DTIC TAB ☐
Unannounced ☐
Justification .....
By .....
Distribution /
Availability Codes
Dist | Avail and / or Special
A-1

ABSTRACT

The subject of this paper is the buckling behavior of a rectangular plate, with parallel thin-walled stiffeners attached to one side, subjected to a combination of axial compression, lateral pressure, and bending moment. The plate is modeled by the Von Kármán plate equations and the stiffeners by a nonlinear beam theory recently derived. An analytical solution is obtained for the buckling load corresponding to a torsional tripping mode of the stiffeners. The effects of various boundary conditions, imperfections, and residual stress are included.

1. INTRODUCTION

Stiffened plates are a basic structural component of ships and submarines. These structures are designed with generous safety margins against overall collapse triggered by buckling. The object of analytical work is to determine design criteria to inhibit buckling at any stress less than yield. Recently [see Danielson *et al* (1993)], we have developed an analytical formula for the buckling load of a stiffened plate subjected to a combination of axial compression and lateral pressure. The object of the present paper is to improve and extend our previous

analysis. A review of the literature, given in our earlier work, will not be repeated here but details of the analysis, which supersedes our earlier work, will be recorded here.

We first consider a plate which is initially rectangular in shape and has several parallel I-stiffeners spaced a distance b apart. The structure is subjected to a combination of uniform axial compressive stress σ (force per unit area of a side), uniform lateral pressure p (force per unit lateral area of the plate), and uniform bending moment M (moment per unit length of an edge). We suppose that at low values of σ, p, and M the plate and stiffeners simply bend and compress symmetrically. Our object is to find the critical load at which the stiffened plate may buckle into an alternate mode (see Fig. 1).

Our present analysis is based on the following simplifying assumptions:

(i) Each plate-stiffener unit of width b undergoes an identical deformation.

(ii) The plate obeys the nonlinear Von Kármán plate equations [see Timoshenko and Gere (1961)]. The stiffeners obey the nonlinear beam equations derived by Danielson and Hodges (1988).

(iii) The plate and stiffener material is elastic, linear, and isotropic.

(iv) Every particle on the bottom surface of a beam undergoes the same displacement as the corresponding particle on the top surface of the plate, and every line of particles in the beams normal to the plate surface remains normal to the deformed plate at its surface. In other words, the bases of the stiffeners are clamped to the plate.

(v) The prebuckling displacements are less than the maximum thickness of the structure and independent of the transverse coordinate.

(vi) The incremental buckling extensional strains at the midsurface of the plate are negligible.

(vii) The incremental buckling displacements may be approximated by the fundamental harmonic in their Fourier expansions.

(viii) The plate and beams are so thin that their thicknesses are negligible compared to their width, height, length, and the wavelength of deformation. A stiffener is so slender that its width and height are negligible compared to its length and the wavelength of deformation.

2. GENERAL POTENTIAL ENERGY FUNCTIONAL

It follows from assumption (i) that we need only analyze a single plate unit containing a single stiffener. From assumptions (ii)-(iii), the potential energy of the plate plus beam is given by:

$$\begin{aligned} P[u,v,w] \;=\; & \int_{-\frac{b}{2}}^{\frac{b}{2}} \int_0^a \Big\{ \frac{Et}{1-\nu^2}\Big[\frac{e_{11}^2}{2} + \nu e_{11}e_{22} + \frac{e_{22}^2}{2} + (1-\nu)e_{12}^2\Big] \\ & + D\left[\frac{w_{11}^2}{2} + \nu w_{11}w_{22} + \frac{w_{22}^2}{2} + (1-\nu)w_{12}^2\right] + \sigma t u_1 - pw + M w_{11}\Big\}\, dx_1\, dx_2 \\ & + \int\int\int_{\text{beam}} \left(\frac{E}{2}\gamma_{11}^2 + 2G\gamma_{12}^2 + 2G\gamma_{13}^2\right) dx_1\, dx_2\, dx_3 + \int_0^a \sigma A(\overline{u}_1 - c\overline{w}_{11})dx_1 \end{aligned} \tag{1}$$

Here $(x_1,\ x_2,\ x_3)$ are Cartesian coordinates measured from the midpoint of a side of the plate. The plate unit has length a, width b, and thickness t, while the beam has cross-sectional area A and centroidal height c. The elastic constants are defined by

$$D = \frac{Et^3}{12(1-\nu^2)}, \qquad G = \frac{E}{2(1+\nu)}$$

where E is the Young modulus and ν is the Poisson ratio. The displacements of the plate midsurface in the x_1, x_2, and x_3 directions are denoted by $u(x_1,\ x_2)$, $v(x_1, x_2)$, and $w(x_1,\ x_2)$, respectively. Subscripts on u, v, or w denote partial differentiation with respect to the coordinates x_1 or x_2; e.g., $w_{12} = \frac{\partial^2 w}{\partial x_1 \partial x_2}$. The extensional strains at the midsurface of the plate are given by

$$e_{11} = u_1 + \frac{1}{2}w_1^2,\ e_{12} = \frac{1}{2}(u_2 + v_1 + w_1 w_2),\ e_{22} = v_2 + \frac{1}{2}w_2^2$$

The strains in the beam are denoted by $\gamma_{11}(x_1, x_2, x_3), \gamma_{12}(x_1, x_2, x_3)$, and $\gamma_{13}(x_1, x_2, x_3)$ and are related to the displacements by equations (9, 10) of Danielson and Hodges (1988), which upon invoking assumption (iv) are transformed into:

$$\begin{aligned}
\gamma_{11} &= E_{11} + (E_{12} + \overline{e}_{12})\phi_3 - E_{13}\phi_2 + \frac{1}{2}\phi_2^2 + \frac{1}{2}\phi_3^2 \\
\gamma_{12} &= E_{12} - \frac{1}{2}E_{11}\phi_3, \qquad \gamma_{13} = E_{13} + \frac{1}{2}E_{11}\phi_2 \\
E_{11} &= \overline{e}_{11} - x_3\overline{w}_{11} + \lambda\overline{w}_{112}, \qquad E_{12} = \overline{e}_{12} - \frac{1}{2}x_3\overline{w}_{12} + \frac{1}{2}\lambda_2\overline{w}_{12} \\
E_{13} &= \frac{1}{2}x_2\overline{w}_{12} + \frac{1}{2}\lambda_3\overline{w}_{12} + \frac{1}{2}\lambda\overline{w}_{11}\overline{w}_{12} \\
\phi_2 &= -\frac{1}{2}x_2\overline{w}_{12} + \frac{1}{2}\lambda_3\overline{w}_{12} - \frac{1}{2}\lambda\overline{w}_{11}\overline{w}_{12} \\
\phi_3 &= -\frac{1}{2}x_3\overline{w}_{12} - \frac{1}{2}\lambda_2\overline{w}_{12}\,.
\end{aligned}$$

Here $\lambda(x_2, x_3)$ is the Saint-Venant warping function for the beam cross section; subscripts on λ denote partial differentiation with respect to x_2 and x_3. Bars over a symbol denote its value at the beam axis; e.g., the axial displacement of the beam centroid is $\overline{u}(x_1) - c\overline{w}_1(x_1)$.

Substituting these relations into (1) and neglecting higher than cubic terms in the displacements (these are not needed in our subsequent analysis), we obtain a lengthy expression for the potential energy which forms the basis for our subsequent analysis. Among all the functions satisfying the geometric or natural boundary conditions the one which causes the potential energy to be a minimum is the equilibrium state. We suppose that the outer edges of the plate are free to displace in the horizontal plane but restrained in the vertical direction, so the geometric boundary conditions are

$$w(0, x_2) = w(a, x_2) = 0 \tag{2}$$

Note that the case of simply supported edges is obtained by setting $M = 0$.

3. PREBUCKLING SOLUTION

The prebuckling equilibrium state is denoted by $(\mathring{u}, \mathring{w})$. It follows from assumptions (ii)-(v) that the potential energy in the prebuckling state is

$$P[\mathring{u}, \mathring{w}] = \int_0^a \left[\frac{E(A+tb)\,\mathring{u}_1^2}{2} + \frac{(bD+EI_{22})\,\mathring{w}_{11}^2}{2} - EAc\,\mathring{u}_1\mathring{w}_{11} \right. \\ \left. +\sigma(A+tb)\,\mathring{u}_1 - \sigma Ac\,\mathring{w}_{11} - pb\,\mathring{w} + Mb\,\mathring{w}_{11} \right] dx_1 \tag{3}$$

Here I_{22} is the moment of inertia of the beam section about the x_2-axis:

$$I_{22} = \int\int_{\substack{\text{beam}\\ \text{section}}} x_3^2\, dx_2\, dx_3\,.$$

The prebuckling displacements are determined by the variational equation

$$\delta P = 0$$

Taking the variation of (3), and integrating by parts with respect to x_1, we obtain the differential equations

$$\begin{aligned} (bD+EI_{22})\,\mathring{w}_{1111} - EAc\,\mathring{u}_{111} - pb &= 0 \\ -EAc\,\mathring{w}_{11} + E(A+tb)\,\mathring{u}_1 + \sigma(A+tb) &= 0 \end{aligned} \tag{4}$$

and boundary conditions

$$\text{at } x=0 \text{ and } x=a: \quad (bD+EI_{22})\,\mathring{w}_{11} - EAc\,\mathring{u}_1 - \sigma Ac + Mb = 0 \tag{5}$$

The solution to the linear boundary value problem (2), (4), (5) is

$$\mathring{u}_1 = -\frac{\sigma}{E} + \frac{Ac\,\mathring{w}_{11}}{A+tb} \tag{6}$$

$$\mathring{w} = \frac{px_1(a-x_1)(a^2+ax_1-x_1^2)}{24[D+\frac{E}{b}(I_{22}-\frac{A^2c^2}{A+tb})]} + \frac{Mx_1(a-x_1)}{2[D+\frac{E}{b}(I_{22}-\frac{A^2c^2}{A+tb})]} \tag{7}$$

Note that (6)-(7) reduce in the case $I_{22} = A = 0$ to the well-known exact solution for an isolated wide plate, and in the case $t = 0$ to the well-known exact solution for an isolated beam.

4. BUCKLING SOLUTION

According to the energy criterion of elastic stability, the prebuckling equilibrium state is stable if and only if the energy functional which represents the increase of the total potential energy in a displacement field to some slightly adjacent state $(\overset{\circ}{w} + w)$ is non-negative:

$$P[\overset{\circ}{w} + w] - P[\overset{\circ}{w}] \geq 0 . \tag{8}$$

Since the prebuckling state is an equilibrium state, the terms in (8) which are linear in the incremental displacement w must vanish. It follows that the terms $Q[w]$ in (8) which are quadratic in the incremental displacement must be non-negative:

$$Q[w] \geq 0 .$$

The critical case of neutral equilibrium occurs when there exists a buckling mode w_{cr} satisfying

$$Q[w_{cr}] = 0 \tag{9}$$

$$Q[w \neq w_{cr}] > 0 . \tag{10}$$

The eigenvalues σ_{cr}, p_{cr}, and M_{cr} which render (9) zero are the critical buckling loads.

From the first integral in (1) and assumption (vi), the quadratic functional for the plate is

$$Q_{\text{plate}} = \int_{\frac{-b}{2}}^{\frac{b}{2}} \int_0^a \left\{ D \left[\frac{w_{11}^2}{2} + \nu w_{11} w_{22} + \frac{w_{22}^2}{2} + (1-\nu) w_{12}^2 \right] - \frac{\sigma t w_1^2}{2} \right\} dx_1 \, dx_2 . \tag{11}$$

From the remaining integrals in (1), the quadratic functional for the beam is

$$Q_{\text{beam}} = \frac{EH_1}{2} \int_0^a \overline{w}_{112}^2 \, dx_1 + \frac{(-EH_3 + \frac{EIAc}{A+tb} + GH_2)}{2} \int_0^a \overset{\circ}{\overline{w}}_{11} \, \overline{w}_{12}^2 dx_1 + \frac{(GJ - \sigma I)}{2} \int_0^a \overline{w}_{12}^2 dx_1 . \tag{12}$$

Here I is the polar moment of inertia about the x_1-axis, J is the Saint-Venant torsion constant, and H_1, H_2, H_3 are constants defined by the following integrals over the beam cross section:

$$
\begin{aligned}
I &= \int\int_{\substack{\text{beam}\\\text{section}}} (x_2^2 + x_3^2) dx_2\, dx_3 \\
J &= \int\int_{\substack{\text{beam}\\\text{section}}} [(x_2 + \lambda_3)^2 + (x_3 - \lambda_2)^2] dx_2\, dx_3 \\
H_1 &= \int\int_{\substack{\text{beam}\\\text{section}}} \lambda^2 dx_2\, dx_3 \\
H_2 &= \int\int_{\substack{\text{beam}\\\text{section}}} [x_3(x_2^2 + x_3^2 - \lambda_2^2 - \lambda_3^2) + 2\lambda(x_2 + \lambda_3)] dx_2\, dx_3 \\
H_3 &= \frac{1}{4}\int\int_{\substack{\text{beam}\\\text{section}}} x_3[(x_2 - \lambda_3)^2 + (x_3 + \lambda_2)^2 + 2(x_2^2 + x_3^2 - \lambda_2^2 - \lambda_3^2)] dx_2\, dx_3
\end{aligned}
$$

The total quadratic functional for the plate plus the beam is the sum of (10) and (11).

Next, we calculate the cross section properties for a beam composed of a thin web and a thin bottom and top flange. The web has thickness t_w and height h_w; the bottom flange has thickness t_b and width h_b; the top flange has thickness t_f and width h_f. The Saint-Venant warping function for this thin-walled cross section is:

$$
\lambda = \begin{cases} x_2(2h_w + t_f - x_3) & \text{flange} \\ x_2 x_3 & \text{web} \\ -x_2 x_3 & \text{bottom flange} \end{cases} .
$$

Using approximation (viii) we obtain:

$$
\begin{aligned}
A &= t_b h_b + t_w h_w + t_f h_f \\
Ac &= \frac{t_w h_w^2}{2} + t_f h_f h_w \\
I_{22} &= \frac{t_w h_w^3}{3} + t_f h_w^2 h_f \\
I &= \frac{t_b h_b^3}{12} + \frac{t_w h_w^3}{3} + \frac{t_f h_f^3}{12} + t_f h_w^2 h_f \\
J &= \frac{t_b^3 h_b}{3} + \frac{t_w^3 h_w}{3} + \frac{t_f^3 h_f}{3} \\
H_1 &= \frac{t_f h_w^2 h_f^3}{12} \\
H_2 &= \frac{t_f^3 h_w h_f}{3} + \frac{t_w^3 h_w^2}{6} \\
H_3 &= \frac{t_w h_w^4}{4} + t_f h_w^3 h_f + \frac{t_f h_w h_f^3}{12} .
\end{aligned}
$$

In accordance with approximation (vii) and the boundary conditions (2) and (5), we represent the incremental buckling displacement by the following shape (an arbitrary multiplicative constant has been set equal to 1):

$$w = \sin\frac{m\pi x_1}{a}\sin\frac{\pi x_2}{b}, \quad m = 1, 2, 3\cdots \tag{13}$$

Substitution of this buckling mode into (11) plus (12) and application of the inequality (10) leads finally to:

$$\sigma_{cr} \leq \frac{\dfrac{a^2E(1-\frac{3}{\pi^2m^2})(H_3-\frac{IAc}{A+tb})p_{cr}}{12[D+\frac{E}{b}(I_{22}-\frac{A^2c^2}{A+tb})]} + \dfrac{E(H_3-\frac{IAc}{A+tb})M_{cr}}{D+\frac{E}{b}(I_{22}-\frac{A^2c^2}{A+tb})} + \dfrac{bD}{2}(\dfrac{mb}{a}+\dfrac{a}{mb})^2 + \dfrac{\pi^2m^2EH_1}{a^2} + GJ}{I+\dfrac{tb^3}{2\pi^2}} \tag{14}$$

Here m is taken to be the integer which gives the lowest value of σ_{cr} in (14). Note that (14) reduces in the case $t_b = t_w = t_f = 0$ to the well-known exact solution for an isolated plate, in the case $p_{cr} = M_{cr} = t = 0$ to our previous exact solution for an isolated beam [see formula (28) of Danielson *et al* (1990)], and in the case $p_{cr} = M_{cr} = 0$ to formula (87) (with $\sigma^m_{pbe} = (\sigma_e)^m_{pbe}$ and $I_z\bar{s}^2 + \Gamma \approx H_1$) of Adamchak (1979).

5. CLAMPED EDGES

In this section we consider the clamped case when the bending moment M is not prescribed, but the rotation at the edges is completely restrained. Then the additional geometric boundary conditions are

$$w_1(0, x_2) = w_1(a, x_2) = 0 \tag{15}$$

Note that in this case each material particle on an edge cross-section is totally restrained from any motion at the buckling point.

The prebuckling solution to the linear boundary value problem (2), (4), (15) is (6) and

$$\overset{\circ}{w} = \frac{px_1^2(a-x_1)^2}{24[D+\frac{E}{b}(I_{22}-\frac{A^2c^2}{A+tb})]} \tag{16}$$

Note that (6) and (16) reduce in the case $I_{22} = A = 0$ tc the well-known exact solution for an isolated wide plate, and in the case $t = 0$ to the well-known exact solution for an isolated beam.

In accordance with approximation (vii) and the boundary conditions (2) and (15), we now represent the incremental buckling displacement by the following shape:

$$w = (1 - \cos\frac{m\pi x_1}{a})\sin\frac{\pi x_2}{b}, \quad m = 2, 4, 6, \cdots \tag{17}$$

Substitution of this buckling mode into (11) plus (12) and application of the inequality (10) leads finally to

$$\sigma_{cr} \leq \frac{\dfrac{a^2 E(H_3 - \dfrac{IAc}{A+tb})p_{cr}}{4\pi^2 m^2[D + \dfrac{E}{b}(I_{22} - \dfrac{A^2c^2}{A+tb})]} + \dfrac{bD}{2}[(\dfrac{mb}{a} + \dfrac{a}{mb})^2 + \dfrac{2a^2}{m^2b^2}] + \dfrac{\pi^2 m^2 E H_1}{a^2} + GJ}{I + \dfrac{tb^3}{2\pi^2}} \tag{18}$$

Note that (18) reduces in the case $p_{cr} = t = 0$ to our previous exact solution for an isolated beam [see formula (28) of Danielson *et al* (1990)].

6. IMPERFECTIONS

In this section we suppose that the structure has an initial normal deflection in the shape of the prebuckling normal displacement caused by the pressure p. Specifically, when M is prescribed on the edges the initial normal deflection is

$$\frac{16x_1(a - x_1)(a^2 + ax_1 - x_1^2)}{5a^4}W$$

while for clamped edges the initial normal deflection is

$$\frac{16x_1^2(a - x_1)^2}{a^4}W$$

We also assume that the amplitude W of the initial displacement is less than the maximum thickness of the structure. Then the prebuckling displacements are still given by our

previous solutions (6)-(7) or (16), and the quadratic functional Q_{plate} is still given by (11). The only effect of this prebuckling deflection is to create a new term in Q_{beam} which is the same as the middle integral in (12) with the prebuckling normal displacement replaced by the initial displacement, and we can use our previous calculations to evaluate this integral.

We thereby find that the effect of this imperfection is to add an additional term to our previous formula for σ_{cr}:

M case:

$$\sigma_{cr} = \sigma_{cr}[W=0] + \frac{\dfrac{32E(1-\dfrac{3}{\pi^2 m^2})(H_3 - \dfrac{IAc}{A+tb})W}{5a^2}}{I + \dfrac{tb^3}{2\pi^2}} \tag{19}$$

Clamped case:

$$\sigma_{cr} = \sigma_{cr}[W=0] + \frac{\dfrac{96E(H_3 - \dfrac{IAc}{A+tb})W}{\pi^2 m^2 a^2}}{I + \dfrac{tb^3}{2\pi^2}} \tag{20}$$

Note that for an asymmetrical structure torsional deformation of the stiffeners may initiate upon application of the slightest load, so bifurcation may not be able to be used as the buckling criteria [see Ostapenko and Yoo (1988)].

7. RESIDUAL STRESS

The simplest way to account for residual stress is to assume that the plate is subject to a uniform compressive residual stress S, while the beam is subject to a counterbalancing distribution of residual stress $\sigma_r(x_2, x_3)$ [see Hughes (1983)]. The only effect of this residual stress is to create a new term in Q_{plate} which is the same as the last integral in (11) with σ replaced by S. Note that the analogous term in Q_{beam} is zero because $\overline{w}(x_1) = 0$ for the assumed mode shapes (13) and (17):

$$-\int\int\int_{\text{beam}} \frac{\sigma_r \overline{w}_1^2}{2} dx_1\, dx_2\, dx_3 = 0$$

We thereby find that the effect of this residual stress is to add an additional term to our formulas for σ_{cr}:

$$\sigma_{cr} = \sigma_{cr}[S=0] - \frac{S}{1 + \frac{2\pi^2 I}{tb^3}} \tag{21}$$

CONCLUSIONS

Simple analytical formulas that include the effects of combined loading, various boundary conditions, imperfections, and residual stress do not appear to exist in the literature. As an example of the numerical predictions of our formulas, let us assume the following typical parameter values [taken from Smith (1975)]:

$E = 30{,}000$ ksi	$t_b = 0$
$\nu = .3$	$h_b = 0$
$a = 48$ in	$t_w = .28$ in
$b = 24$ in	$h_w = 5.5$ in
$t = .31$ in	$t_f = .56$ in
	$h_f = 3.1$ in

For this example, the formulas (14), (19), (21) and (18), (20), (21) reduce to

M case ($m = 1$):

$$\sigma_{cr} = 49 + 60p_{cr} + .45M_{cr} + 55W - .76S \tag{22}$$

Clamped case ($m = 2$):

$$\sigma_{cr} = 105 + 6.6p_{cr} + 30W - .76S \tag{23}$$

The collapse loads of $\sigma_{cr} = 27.8$ psi ($p_{cr} = 0$) and $\sigma_{cr} = 27.1$ psi ($p_{cr} = .015$ ksi) measured by Smith (1975) on ship grillages may be accounted for by choosing appropriate values of M_{cr}, W, and S in (22) or (23).

We have made an attempt to verify the accuracy of some of the approximations upon which our analysis is based. For instance, in the M case, we included the effect of beam cross-sectional deformation by allowing the web to undergo a lateral buckling displacement

$$v = \sin\frac{m\pi x_1}{a}(C_1 x_3^2 + C_2 x_3^3)\,,$$

where C_1 and C_2 are constants determined by minimizing the critical axial stress σ_{cr}. For the parameter values listed above, this effect turned out to be negligible. It is possible to invent unusual cases in which the cross-sectional deformation is of importance, but for most practical dimensions the assumption of a rigid cross-section seems ok.

For another instance, in the clamped case, we added together the $m = 2$ and $m = 4$ normal buckling displacements (17):

$$w = [1 - \cos\frac{2\pi x_1}{a} + C_3(1 - \cos\frac{4\pi x_1}{a})]\sin\frac{\pi x_2}{b} ,$$

where C_3 is a constant determined by minimizing the critical axial stress σ_{cr}. For the parameter values listed above, this effect also turned out to be negligible. For most practical dimensions the assumption of a simple buckling mode seems ok.

At any rate, if we include the additional displacement functions needed for the above effects, it doesn't seem possible to obtain simple formulas for the unknown coefficients or buckling loads.

ACKNOWLEDGMENTS

The author was supported by the David Taylor Research Center and by the Naval Postgraduate School Research Program. Dr. D. P. Kihl of the Ship Structures and Protection Department at the David Taylor Research Center proposed the title problem and offered several valuable suggestions.

REFERENCES

Adamchak, J. C. (1979). Design equations for tripping of stiffeners under inplane and lateral loads. David W. Taylor Naval Ship Research and Development Center Report 79/064, Bethesda, MD.

Danielson, D. A. and Hodges, D. H. (1988). A beam theory for large global rotation, moderate local rotation, and small strain. *J. Appl. Mech.*, **55**, 179-184.

Danielson, D. A., Kihl, D. P. and Hodges, D. H. (1990). Tripping of thin walled plating stiffeners in axial compression. *Thin-Walled Struct.*, **10**, 121-142.

Danielson, D. A., Cricelli, A. S., Frenzen, C. L., and Vasudevan, N. (1993). Buckling of stiffened plates under axial compression and lateral pressure. *Int. J. Solids Structures*, **30**, 545-551.

Hughes, O. (1983). *Ship Structural Design.* Wiley, New York.

Ostapenko, A. and Yoo, D. (1988). Tripping of asymmetrical stiffeners under combined loading. Maritime Administration University Research Program Report No. MA-RD-840-88035, Fritz Engineering Laboratroy Report No. 513.3 (Lehigh University).

Smith, C. S. (1975). Compressive strength of welded ship grillages. *Trans. R. Inst. Naval Arch.* **117**, 325-359.

Timoshenko, S. P. and Gere, J. M. (1961). *Theory of Elastic Stability.* McGraw-Hill, Maidenhead, U.K.

Figure: STIFFENED PLATE, LOADING APPLIED, BUCKLING MODE

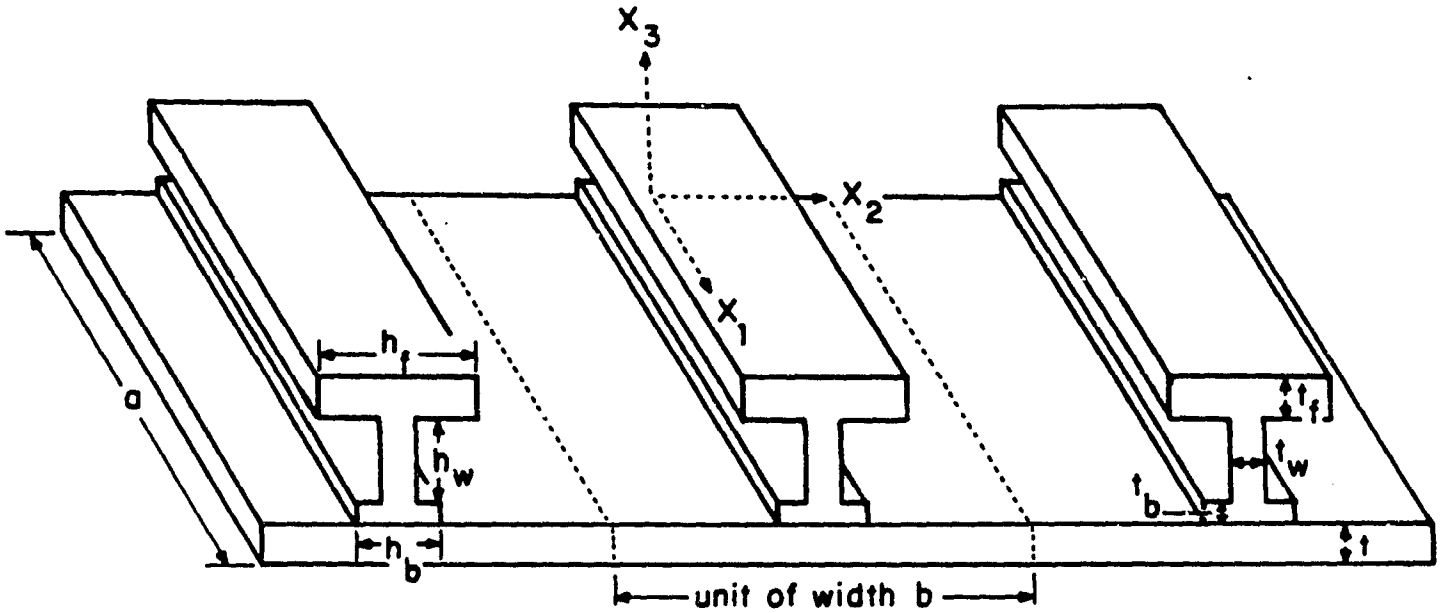
x_3
x_2
x_1
h_f
h_w
h_b
a
t_f
t_w
t_b
t
unit of width b

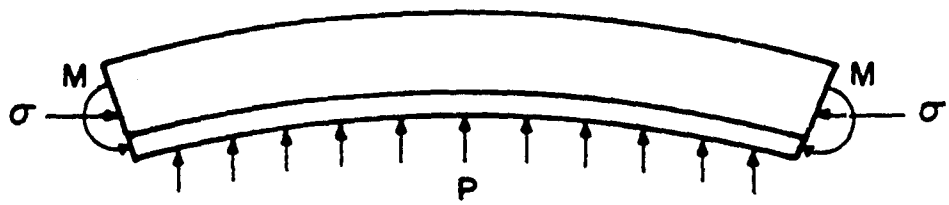
M
M
σ
σ
P

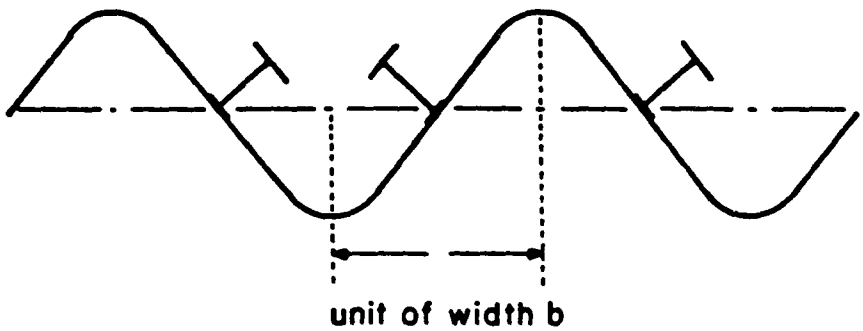
unit of width b

DISTRIBUTION LIST

Director Defense Tech Information Center Cameron Station Alexandria, VA 22314	(2)
Research Office Code 81 Naval Postgraduate School Monterey, CA 93943	(1)
Library Code 52 Naval Postgraduate School Monterey, CA 93943	(2)
Professor Richard Franke, Code MA/Fe Department of Mathematics Naval Postgraduate School Monterey, CA 93943	(1)
D.A. Danielson, Code MA/Dd Department of Mathematics Naval Postgraduate School Monterey, CA 93943	(20)
Dr. Marc Lipman Mathematical, Computer and Information Sciences Division Office of Naval Research 800 Quincy Street Arlington, VA 22217-5000	(1)
Dr. David Kihl Survivability, Structures, and Materials Directorate Naval Surface Warfare Center-Carderock Division Bethesda, MD 20084-5000	(1)