AD-A275 326

ORNL/TM-12104

ornl

OAK RIDGE
NATIONAL
LABORATORY

MARTIN MARIETTA

Evaluation of Methods for Decladding LWR Fuel for a Pyroprocessing-Based Reprocessing Plant

W. D. Bond
J. C. Mailen
G. E. Michaels

DTIC
ELECTE
JAN 31 1994
S E D

94 1 31 010

Approved for public release
Distribution Unlimited

MANAGED BY
MARTIN MARIETTA ENERGY SYSTEMS, INC.
FOR THE UNITED STATES
DEPARTMENT OF ENERGY

94-02929

This report has been reproduced directly from the best available copy.

Available to DOE and DOE contractors from the Office of Scientific and Technical Information, P.O. Box 62, Oak Ridge, TN 37831; prices available from (615) 576-8401, FTS 626-8401.

Available to the public from the National Technical Information Service, U.S. Department of Commerce, 5285 Port Royal Rd., Springfield, VA 22161.

This report was prepared as an account of work sponsored by an agency of the United States Government. Neither the United States Government nor any agency thereof, nor any of their employees, makes any warranty, express or implied, or assumes any legal liability or responsibility for the accuracy, completeness, or usefulness of any information, apparatus, product, or process disclosed, or represents that its use would not infringe privately owned rights. Reference herein to any specific commercial product, process, or service by trade name, trademark, manufacturer, or otherwise, does not necessarily constitute or imply its endorsement, recommendation, or favoring by the United States Government or any agency thereof. The views and opinions of authors expressed herein do not necessarily state or reflect those of the United States Government or any agency thereof.

ORNL/TM-12104
Dist. Category UC-526

EVALUATION OF METHODS FOR DECLADDING LWR FUEL FOR A PYROPROCESSING-BASED REPROCESSING PLANT

W. D. Bond
J. C. Mailen
G. E. Michaels

DTIC QUALITY INSPECTED 2

Chemical Technology Division

Accesion For	
NTIS CRA&I	X
DTIC TAB	☐
Unannounced	☐
Justification	
By	
Distribution /	
Availability Codes	
Dist	Avail and / or Special
A-1	

October 1992

Prepared by the
OAK RIDGE NATIONAL LABORATORY
Oak Ridge, Tennessee 37831-6285
managed by
MARTIN MARIETTA ENERGY SYSTEMS, INC.
for the
U.S. DEPARTMENT OF ENERGY
under contract DE-AC05-84OR21400

CONTENTS

EXECUTIVE SUMMARY 1

1. INTRODUCTION 3

2. DESCRIPTION OF CANDIDATE DECLADDING PROCESSES 8
   2.1 FEED MATERIAL FOR THE PROCESS 8
   2.2 INITIAL SCREENING OF PROCESSES 10
   2.3 PROCESSES THAT WERE EVALUATED 12
      2.3.1 Primary Fuel Removal Processes 12
         2.3.1.1 Roller-Straightener 12
         2.3.1.2 Expose Fuel, Agitate 15
         2.3.1.3 Electrotransport 16
         2.3.1.4 Chlorination 16
         2.3.1.5 Shear, HNO_3 Leach 17
         2.3.1.6 Hydrochlorination 17
         2.3.1.7 Expose Fuel, Oxidize, Agitate 20
      2.3.2 Secondary Fuel Removal Processes 21
         2.3.2.1 Molten Salt Wash/Leach 23
         2.3.2.2 $ZrCl_4/AcCl_x$ Separation 23
         2.3.2.3 HF-HNO_3 Leach 24
         2.3.2.4 Zirconium Cleaning 24
         2.3.2.5 $ZrCl_4$ Waste Processing 25
         2.3.2.6 Nitrate-to-Oxide Conversion 25
      2.3.3 Metal Cutting (Fuel Plenum) 25
         2.3.3.1 Saw, Abrade 26
         2.3.3.2 Laser 26
         2.3.3.3 Wire Electron Discharge Machining (Wire EDM) 27
         2.3.3.4 Shear 27

3. PROCESS EVALUATIONS 27
   3.1 DESCRIPTION OF CRITERIA 28
      3.1.1 Secondary Criteria for Ranking Processes 29
   3.2 EVALUATION OF SELECTED PROCESSES BY CRITERIA 30
   3.3 NUMERICAL RANKING OF PROCESSES 31
   3.4 DISCUSSION OF OPTIONS 34

4. SUMMARY OF RECOMMENDED NEAR-TERM DEVELOPMENT 36
   4.1 TECHNICAL MERIT OF IDENTIFIED OPTIONS 36
   4.2 INITIAL EFFORTS ON DECLADDING 37

5. REFERENCES 38

APPENDIX A. DESCRIPTION OF PROCESSES THAT WERE NOT EVALUATED 43

A.1 PRIMARY FUEL REMOVAL PROCESSES THAT WERE NOT EVALUATED 43
A.1.1 Heat Fuel Pin to Expand Cladding 43
A.1.2 Decladding by Melting or Alloying 43
A.1.3 Zirflex Process 44
A.1.4 Dissolution in Hydrofluoric Acid 46
A.1.5 Nonaqueous Dissolution 46
A.1.6 Alcholic HCl Solutions 48
A.1.7 Direct Dissolution in Molten Lead or Zinc Chloride 48
A.1.8 Liquid-Phase Hydrofluorination in Molten Flouride Salts 49
A.1.9 Molten $ZrCl_4$-$POCl_3$ Dissolvent 51
A.1.10 Electrolytic Dissolution 51
A.1.11 Oxidation Disintegration 52

A.2 SECONDARY FUEL REMOVAL PROCESSES THAT WERE NOT CONSIDERED 54
A.2.1 Electrolytic Etch (Electropolishing) 54
A.2.2 Fuel Removal by Aginated or Ultrasonic Bath 55

EXECUTIVE SUMMARY

The first step in reprocessing disassembled light-water reactor (LWR) spent fuel is to separate the zirconium-based cladding from the UO_2 fuel. A survey of decladding technologies has been performed to identify candidate decladding processes suitable for LWR fuel and compatible with downstream pyroprocesses for separation of actinides and fission products. Technologies for the primary separation of Zircaloy cladding from oxide fuel and for secondary separations (in most cases, a further decontamination of the cladding) were reviewed. Because cutting of the fuel cladding is a necessary step in all flowsheet options, metal cutting technologies were also briefly evaluated.

Criteria for selection of a decladding process were developed, primarily by consultation with the pyroprocess development staff of the Actinide Recycle Program (ARP) at Argonne National Laboratory (ANL). These criteria have resulted in several conclusions about the required decladding process, as noted below.

- There is a requirement that the transuranic (TRU) recovery in the overall decladding process must be >99.9%. Most candidate decladding technologies are unable to recover more than 98 to 99.5% of the heavy metal in the primary process. Therefore, it is likely that a secondary process, usually a further decontamination of the cladding, will be required.

- The ARP process can accommodate up to ~5% of the Zircaloy cladding of the fuel. Thus, a decladding process can fail for a small fraction of the fuel pins without a significant penalty since the failed pins can be directly incorporated into the ARP processes.

- The requirements that the feed to the ARP processes must be oxide (UO_2) and must be dry weighed heavily against the use of the standard chop-HNO_3 leach method used in current commercial reprocessing plants for the primary separation of cladding from fuel.

- The requirement that cladding and fuel assembly wastes must be compatible with the ARP system wastes tends to eliminate the consideration of fluoride-based processes.

The assessment of decladding processes resulted in the identification of the three or four potentially attractive options that may warrant additional near-term evaluation. These options are summarized below, and major strengths and issues of each option are discussed.

Roller-Straightener + Molten Salt Wash/Leach. This process concept involves the use of multiple roller-straightener mechanisms to crush the fuel while maintaining the roundness of the fuel pin cladding, thus allowing most of the ceramic fuel fragments to be poured out one end of the pin. In order to achieve >99.9% recovery, a molten salt rinse would then be used, perhaps repeatedly. The rinse would use a salt that would wet the fuel, such as the 10 mol % CaF_2 in $CaCl_2$ salt used in the Integral Fast Reactor (IFR) process; a salt composition that would dissolve the oxide layer on the cladding to improve

removal of TRU contamination is an alternative. Development of the roller-straightener application to LWR fuel is being investigated in Japan.

The advantages of the roller-straightener technique are believed to be its simplicity, dependence on relatively mature technology, and potentially high process throughput. A disadvantage of this process is the fact that it may prove difficult to resolve roller-straightener process uncertainties with "cold" demonstrations (i.e., tests on simulated fuel).

The advantages of molten salt leaching are believed to be its relatively low technical risk and its compatibility with the downstream pyroprocesses.

This process combination has been chosen for development.

Expose Fuel, Agitate + Molten Salt Leach. This process concept involves exposing the fuel by shearing the cladding and agitating the fuel (such as by tumbling sheared sections of the fuel pin in a ball mill) in order to free the fuel from the cladding and break it into small fragments. Subsequent decontamination of the cladding by molten salt wash/leach would occur in order to achieve the requirement for high TRU recovery. Advantages of the "Expose and Agitate" step are believed to be the relatively low volume of high-level or TRU wastes generated; the compactness, or low process-cell volume, of the process equipment; and the relatively moderate amount of development needed. Potential issues with this technology include the achievable process throughput rates and the ease of equipment maintenance.

The molten salt wash/leach techn' 'ogy was summarized as part of the discussion of the previous process option.

This process combination is considered inferior to the use of the roller-straightener plus molten salt wash/leach.

Hydrochlorination. This process concept involves the reaction of Zircaloy with HCl, either as an anhydrous gas at 700 to 1100 K or in a molten salt mixture, to produce $ZrCl_4$ and $SnCl_2$. The uranium dioxide fuel does not significantly react with HCl. Zirconium tetrachloride is highly volatile and readily separable from actinide chlorides; $SnCl_2$ is less volatile but may not pose a significant problem for the downstream flowsheet. The major advantages of this process concept are believed to be its potential to achieve the requirement for high TRU recovery in a single process step and the compatibility of its process and waste streams with the rest of the flowsheet. Possible problem areas are process reliability, materials of construction, and the acceptability of the $ZrCl_4$ waste stream as a low-level waste (either in an unprocessed form or as processed in facilities external to the main fuel reprocessing facility).

The significant development requirements of this process and the likelihood that $ZrCl_4$ will not be an acceptable waste form give this process a low priority.

Electrotransport. In this process concept, based on an ANL invention, the fuel pins (either intact or sheared into shorter lengths) would be immersed in a molten salt, probably $CaCl_2$-CaF_2. These pins would serve as the anode, and the zirconium and tin

would be selectively electrotransported to the cathode. The major advantage of this concept is believed to be its very high compatibility with the remainder of the pyro-processing flowsheet. Possible problems with this process are the achievable rate of decladding and the possibility that the high TRU decontamination factors cannot be achieved in a single processing step. This process option is at a relatively preliminary level of definition and would require additional engineering analysis and study in order to determine its potential attractiveness.

This process is a backup option to mechanical fuel removal, followed by a molten salt wash/leach step.

In conclusion, the discussion in Sect. 4 recommends that additional near-term study and testing be focused on two technologies: (1) roller-straightener technology and (2) molten salt wash/leach technology. The efforts during FY 1992 would assemble existing information on the embrittlement of LWR cladding at high burnup, test methods for embrittlement, and additional data on roller-straighteners; determine the availability of simulated and irradiated LWR fuel; and identify facilities at ORNL for work with unirradiated and irradiated fuel. Experimental work would begin in FY 1993.

---

1. INTRODUCTION

This study is part of a larger program to identify the available methods that would permit the transuranic (TRU) elements in spent LWR fuel to be incorporated into the Integral Fast Reactor (IFR) fuel cycle where their fuel values are utilized while transmuting them to shorter-lived fission products (i.e., actinide burning). The purpose of this study is to identify LWR fuel decladding options. Acceptable decladding for LWR fuel reprocessing methods must be capable of nearly complete separation of the TRU elements from the cladding residues. An oxide reduction process for converting the metal oxides in LWR fuel to a metal form that is suitable as feed material to the pyrochemical-based ARP reprocessing/actinide partitioning flowsheet (Fig. 1) is being developed at Argonne National Laboratory (ANL). The flowsheet is presently undergoing small-scale testing and characterization at ANL.[1] In a previous study,[2] a panel of experts at ORNL identified several conceptual flowsheet options for converting LWR fuel to forms suitable for the IFR fuel cycle.

Light-water reactor fuel rods, each containing about 2 kg of input heavy metal, range from 0.382 to 0.563 in. in diameter and are 148 to 161 in. long. Figure 2 shows a

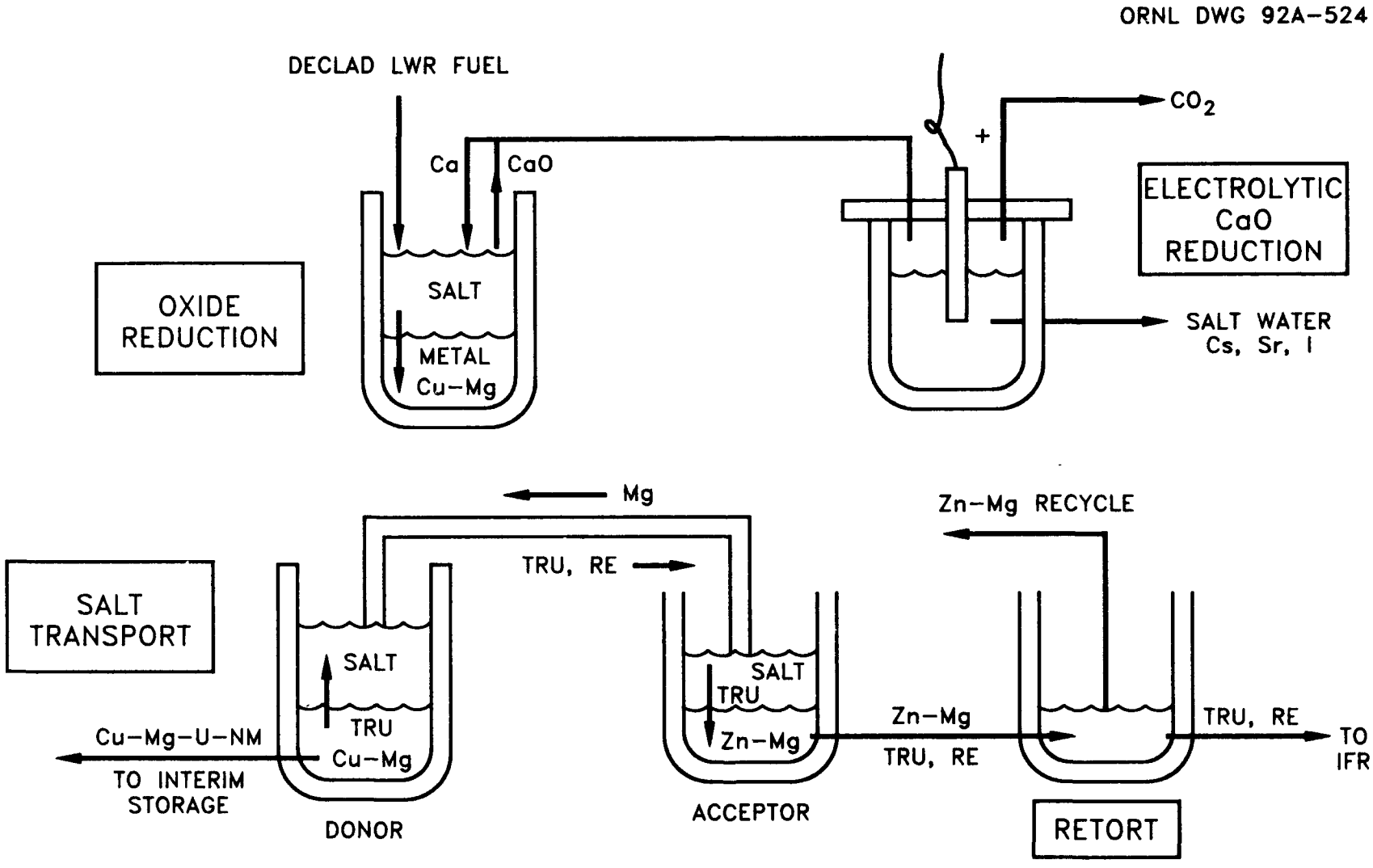

Fig. 1. Argonne National Laboratory conceptual process for incorporating LWR actinides in the ARP fuel cycle: salt transport option.

Fig. 2. Westinghouse PWR fuel assembly. (Source: Westinghouse Electric Company Information Brochure.)

photograph of a Westinghouse PWR fuel assembly. Decladding systems for the LWR-Actinide Recycle (LWR-AR) plant under study will have as a requirement to process about 1.25 million fuel rods per year for a central plant with a spent fuel throughput of 2.5 million kg/year (smaller noncentralized facilities are also an option).

There are two major LWR cladding materials: stainless steel and Zircaloy. The use of stainless steel cladding has been phased out; and it is assumed, for this study, that the inventory of spent fuel to be reprocessed by the ARP will consist only of fuel rods clad with Zircaloy. Within the category of Zircaloy-clad systems there are three major types of cladding systems in use:

1. **Zircaloy-2.** This cladding material is used exclusively for BWRs and has as its major constituents: Zr: 97.963%, Sn: 1.6%, Fe: 0.15%, Cr: 0.1%, and Ni: 0.05%. In the major BWR fuel rod types, the thickness of the cladding ranges from 0.03 to 0.037 in.
2. **Zircaloy-4.** This cladding material is used in PWR fuel rods and has as its major constituents: Zr: 97.911%, Sn: 1.6%, Fe: 0.225%, Cr: 0.125%, and Ni: 0.002%. In the major PWR fuel rods types, the thickness of the cladding ranges from 0.0225 to 0.03 in.
3. **Barrier cladding.** This cladding material is expected to see increased use in BWR systems. The system employs an inner layer of zirconium between the fuel and the Zircaloy cladding. The more ductile zirconium, used as a barrier material, relieves stress cracking of the Zircaloy cladding. The overall thickness of the cladding is nominally 0.032 in., including a barrier thickness of about 0.005 in.

For the purposes of this study, the differences between these cladding systems are not considered. Particularly for technology options for which the mechanical properties of the cladding system are important, the differences between cladding systems will need to be evaluated as part of future studies.

The primary criteria of a decladding process or a decladding/actinide partitioning combination process are shown in Table 1. The characteristics listed are basically self-explanatory; however, it should be emphasized that the high TRU recovery must be achieved to reduce the TRU waste requirements for fuel cladding and reprocessing residues. In the past, about 99.5% overall recovery of the uranium and plutonium have been typical of fuel reprocessing plants.

Table 1. Primary criteria for a decladding process

1. The feed to the ARP process must be oxide (UO_2).
2. Volatile fission products must be contained.
3. The feed to the ARP process must be dry.
4. The heavy-metal recovery in the overall process, including primary and secondary treatment, must be >99.9%.
5. No vapors that are incompatible with the ARP cell atmosphere can enter the cell.
6. The cladding and fuel assembly wastes must be compatible with the ARP plant wastes.

In this evaluation, a literature search identified possible processes and the existing published information. The processes were screened into those which had potential for suitable meshing with the ARP processes and those which, for a variety of reasons, were deemed not worthy of further attention; the rejected processes are described in Appendix A. The primary criteria were received from ANL staff members at a meeting during October 1991. In a subsequent meeting with ANL staff members during December 1991, the primary criteria were discussed further and resulted in minor modifications. Processes to be considered had to meet the primary criteria. Additional secondary criteria were added by ORNL staff members to help identify the most desirable processes, and the identified processes were given numerical scores based on the secondary criteria. The amount of additional development for the process steps was also estimated. In most cases, a combination of processes is necessary to meet the criterion of >99.9% recovery of actinides. The total processes were evaluated by summation of the numerical scores of the individual operations. The leading candidates were further evaluated, and the identified needs for near-term development are given (see Sect. 3).

Both mechanical and chemical decladding methods were surveyed and evaluated in this study. Mechanical decladding processes were defined here as those in which the

cladding and fuel separation is achieved solely by mechanical means. Chemical decladding, by our definition, not only refers to selective removal of the Zircaloy cladding material by chemical reaction or dissolution but also includes chopping the fuel rods into short lengths to expose the fuel core and removing the core material by a selective chemical reaction, leaving the unreactive cladding. To achieve the desired recovery of fuel values, the decladding process must result in essentially total separation of fuel core and cladding, or else the cladding must be subjected to appropriate secondary processing. Processes based on solid-solid separations are not quantitative because of the tendency of solids to adhere to one another. For this reason, we assumed that all mechanical decladding processes would be followed by a secondary treatment (leach or washing) to remove the last traces of fuel from the cladding.

2. DESCRIPTION OF CANDIDATE DECLADDING PROCESSES

The decladding system for LWR fuel must have several steps, as illustrated in Fig. 3. The fuel assemblies are first disassembled, the empty plenum ends of the fuel pins are removed in most processing schemes to be discussed, there is a primary fuel-cladding separation step, and there is usually a secondary cladding decontamination step. If the roller-straightener method is used, the plenum and fuel compression spring will be removed after the fuel has been pulverized. The disassembly may not occur at the ARP plant but may be performed at the reactor as a fuel consolidation operation (Sect. 2.1). In the cases where the Zircaloy cladding is removed by a chemical method (formation of a volatile compound, dissolution), the secondary decontamination step is a secondary chemical treatment. Waste streams are generated in each step of the decladding. In some cases, the waste can be handled as a separate waste stream; an important case is that of clean fuel cladding. In other cases, the waste stream will be incorporated into the ARP waste processing area. This evaluation has considered the last three steps shown in Fig. 3.

2.1 FEED MATERIAL FOR THE PROCESS

Fuel pins from assemblies that have been disassembled for consolidation should be readily available by the time the ARP recycle facility is operational. Currently, more than

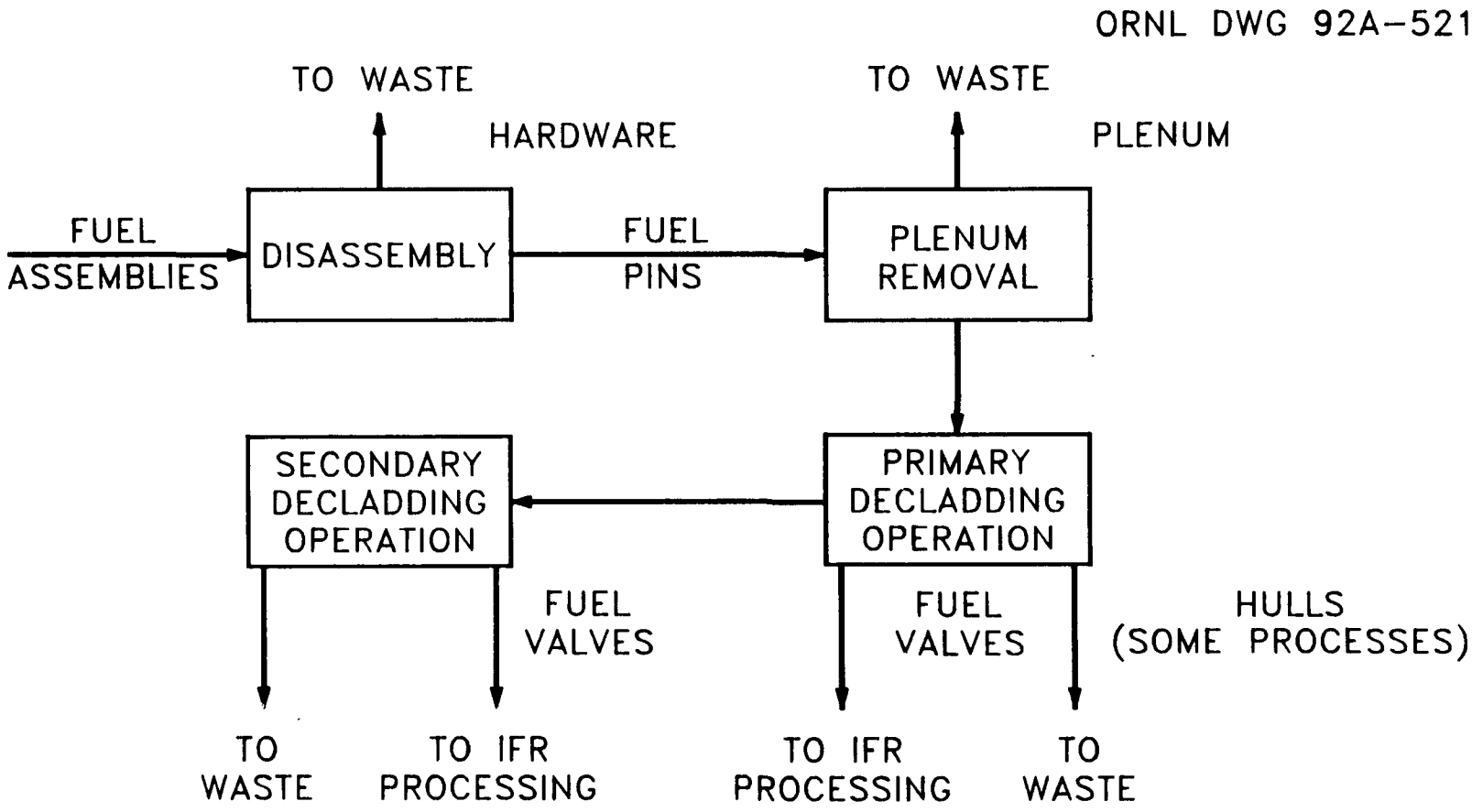

Fig. 3. Major operations for decladding LWR fuel.

100 PWR assemblies have been disassembled in demonstrations of fuel rod consolidation. A dry fuel consolidation system is being developed by the NUS Corporation, and in-pool fuel consolidation systems are being developed by Babock & Wilcox and the Nuclear Assurance Corporation. The latter two are portable systems that will be transported to the storage pool and operated by the vendor as a service to the reactor operator.[3] The use of fuel pins rather than whole fuel assemblies will simplify the LWR decladding system but will require multiple decladding lines.

2.2 INITIAL SCREENING OF PROCESSES

There are both mechanical and chemical options for decladding LWR fuels; however, the aqueous-based chop-HNO_3 leach process is the only decladding method that has achieved commercial status in the reprocessing of spent fuels.[4] It was originally employed in the United States at the West Valley Plant (now closed) but is presently in use in France at the LaHague Plant. In the past, a variety of methods were investigated for Zircaloy-clad fuels that were based on either the type of fuel core (oxide or metal) or on the separation methods employed to produce a purified UF_6 product suitable for enrichment cascade feeds. The methods have included fuel removal by mechanical treatments and chemical treatments for decladding or recovery of the last traces of fuel from cladding. An initial screening of the proposed methods was done, before the evaluations were made, based on considerations of potential applicability to the needs of the ARP system. A number of the processes were found to be largely untested, to have very serious corrosion problems with containment of the process doubtful, or to be very difficult to interface with the ARP process. Table 2 lists the processes and divides them into those which were fully evaluated and those which were eliminated in the initial screening. The processes that were not evaluated further are described in Appendix A with indications of their major problems. The methods that appeared to merit further evaluation are described in this section. These methods are further subdivided into the "Primary Fuel Removal or Processes" and the "Secondary Fuel Removal or Processes," as was done in the evaluations of this report.

Table 2. Processes considered for evaluation

Processes selected for evaluation	Processes that were screened out
A. Primary	**A. Primary**
Roller-straightener	Heat fuel pin to expand cladding
Expose fuel, agitate	Decladding by melting or alloying
Electrotransport	Zirflex process
Chlorination	Dissolution in hydrofluoric acid
Shear, HNO_3 leach	Nonaqueous dissolution
Hydrochlorination	Alcoholic HCl solutions
Expose fuel, oxidize, agitate	Direct dissolution in molten lead or zinc chloride
B. Secondary	Liquid-phase hydrofluorination in molten fluoride salts
Molten salt wash/leach	Molten $ZrCl_4$-$POCl_3$ dissolvent
$ZrCl_4/AcCl_x$[a] separation	Electrolytic dissolution
HF-HNO_3 leach	Oxidation disintegration
Zirconium cleaning	**B. Secondary**
$ZrCl_4$ waste processing	Electrolytic etch (electropolishing)
Nitrate-to-oxide conversion	Fuel removal by agitated or ultrasonic bath
C. Metal cutting (plenum)	
Saw, abrade	
Laser	
Wire electron discharge machining	
Shear	

[a]Actinide chloride.

2.3 PROCESSES THAT WERE EVALUATED

2.3.1 Primary Fuel Removal Processes

2.3.1.1 Roller-Straightener

This technique has been described in papers from Egypt[5,6] and Japan.[7,8] Additional information has been obtained from Dr. Kazuyuki Fukudome,[19] who is currently investigating the method in Japan. The roller-straightener is a common device used to both straighten and re-round deformed tubing by passing the tube through a series of rollers. A roller-straightener in use at ORNL is shown in Fig. 4; this unit is about 6 ft long. Passing a tube or, in our case a fuel pin, through the device causes flexing and radial deformation of the tube (Fig. 5). The radial deformation crushes the fuel material within the tube and also gives a modest increase in the tube diameter. The Japanese report that, at the end of the operation, the fuel fragments could be poured from a single-end opening of the fuel pin. An important question is whether the irradiated cladding would be sufficiently embrittled to crack under deformation.

The fuel pins tested in the recent Japanese work were either 1 or 2 m long and were normally passed through the roller-straightener three to five times. About 300 simulated fuel pins containing Al_2O_3 and 20 fuel pins containing unirradiated UO_2 were tested. About half the pins were used in determining the best settings for the roller-straightener. Pins tested using the determined settings were declad without failures. A 99.9% recovery of Al_2O_3 from the tested pins was achieved when one end of the treated pin was cut off and the pin was "hammered." The results indicate that powder removal was the most challenging step.

The cladding of the test pins was embrittled to simulate irradiated fuel by two methods: cold reduction without annealing and H_2 absorption after cold reduction. Elongation of the tubing at rupture was about 15% for cold reduction and about 5% after H_2 absorption. No cracking of the embrittled cladding was observed in the roller-straightener tests.

The particle sizes for the powders generated from Al_2O_3 and UO_2 pellets averaged about 200 μm.

The Japanese workers have done a large amount of work on the method, but have not tested irradiated fuel.

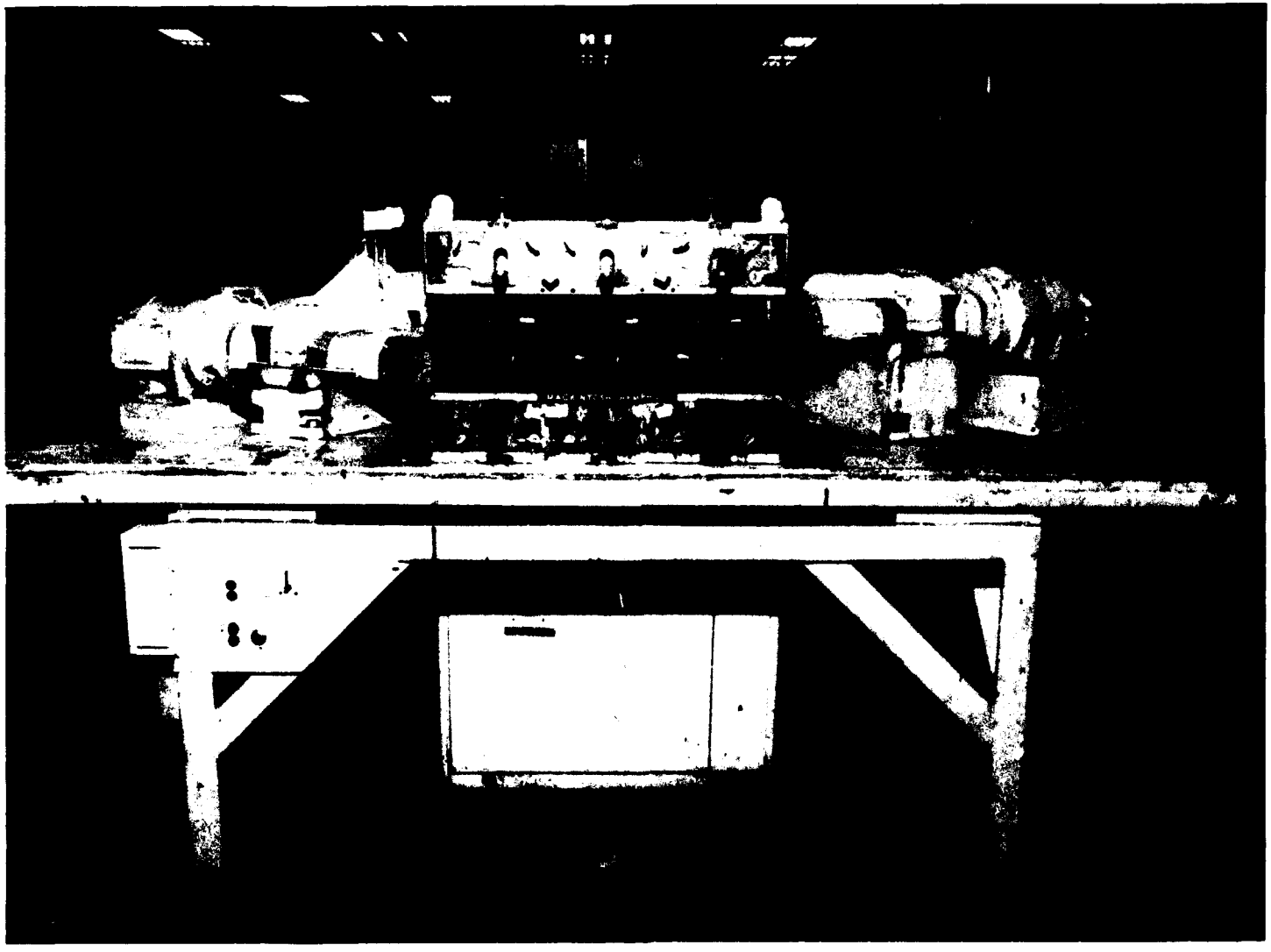

Fig. 4. Roller-straightener at ORNL.

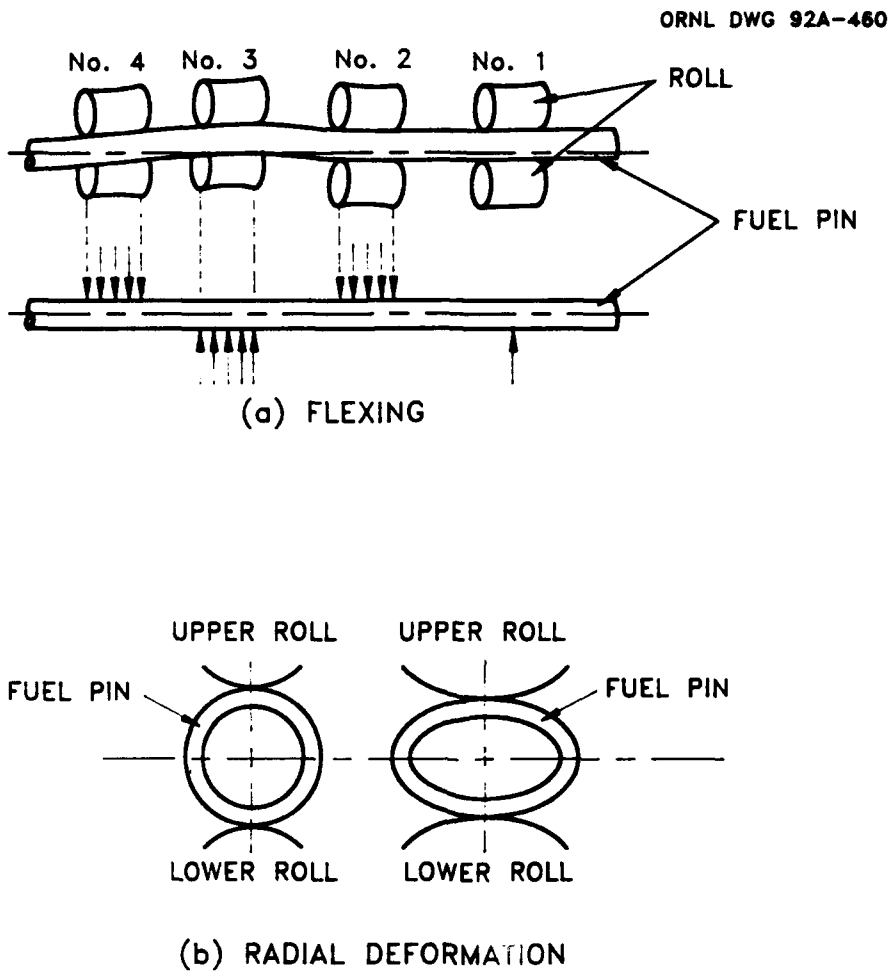

Fig. 5. Operations of a roller-straightener.

A number of possible differences between irradiated fuel and the simulated fuel may cause difficulties. When exposed to water at high temperatures, irradiated fuel develops an oxide coating that will spall off during the roller-straightener treatment. Provisions for collecting the zirconia dust will probably be needed.

Each roller pair has four roller bearings and two universal bearings requiring heavy-duty lubricant. The rotating parts would require periodic replacement: for a three-roll straightener, 12 bearings and 6 universals. Easy replacement would require some redesign of the commercial roller-straightener to facilitate remote replacement of bearings.

It is possible that, if the fuel is bonded to the cladding by fuel-clad interactions, the rigidity of the fuel could exert additional forces on the tube wall and lead to cracking. The Japanese tested fuel pellets glued to the walls, but the actual case may not have been completely simulated. Because it is also likely that more than one pass through the roller-straightener will be required, the end caps could crack due to the cracked fuel being pushed in the rolling direction. On short tubes such as were tested by the Japanese this mode of failure may not be important, but it would be expected to be of more importance in full-length fuel pins.

The option appears to be worth pursuing, but will need testing with irradiated fuel.

2.3.1.2 Expose Fuel, Agitate

The most common option for exposing the fuel is to shear the fuel pins into short segments. French work[9] looked at the option of shearing the cladding into short sections and agitating the fuel by tumbling it in a ball mill to free the fuel from the cladding. The balls caused breakage of the fuel within the fuel pin segments. In tests with irradiated fuel, plutonium losses were from 0.14 to 0.8% for fuel segments between 5 and 10 mm in length. The best results were obtained when the fuel was first fed through a hammer mill before treating in the ball mill. In this case, good removals were obtained even with segment lengths of 70 mm (2.8 in.). The paper states that single-pin shearing is not suitable for a major LWR fuel reprocessing plant; this needs to be evaluated. This approach would appear to be a problem if the fuel bundle were sheared intact, particularly with BWR fuels where a shroud is present. Note that additional release of volatile fission products will occur when the fuel is crushed.

2.3.1.3 Electrotransport

Electrotransport and electrorefining methods are commonly used in the ANL pyroprocesses. To declad the LWR fuel pins (either intact or sheared into shorter lengths), they would be used as the anode of an electrolytic cell with the zirconium and tin of the Zircaloy being transported through molten $CaCl_2$-CaF_2 salt to deposit on the cathode. This process would not require any additions of materials not already present in the ARP system, and the technology is a straightforward extension of the existing ARP technology. Possible problem areas are in rates of decladding and in contamination of the deposited zirconium and tin with fuel values, either from dissolved fuel materials or by incorporation of fuel particles in the metal deposit. The use of a liquid cadmium cathode, which would be distilled to separate the zirconium and cadmium, would eliminate problems with incorporation of fuel particles.

This process needs a paper study and experimental testing if it appears attractive.

2.3.1.4 Chlorination

Chlorination of the Zircaloy in a molten salt, probably $CaCl_2$-CaF_2, is possible. In the absence of zirconium, the actinide oxides would not react significantly because the oxides are more thermodynamically stable than the chlorides. When chlorination of oxides is desired, as in the AVLIS head-end treatment of uranium oxide,[10] carbon is added to act as an oxygen getter, as shown in the following chemical equation:

$$UO_2 + 2Cl_2 + C \rightarrow UCl_4 + CO_2 .$$

If the Zircaloy cladding is chlorinated, it appears, by the standard thermodynamic values, that the zirconium can act as an oxygen getter allowing conversion of actinides to volatile chlorides:

$$UO_2 + ZrCl_4 \rightarrow UCl_4 + ZrO_2 .$$

Then a separate process would be required to separate the actinides from the zirconium chlorides, which is a significant disadvantage. Additionally, the chlorination system is very corrosive to all known containment materials: ceramic oxides dissolve (in the presence of an oxygen getter), carbon reacts with dissolved oxides, and all metals dissolve. The

solution to this problem for the AVLIS studies was to add carbon black to the molten salt where it reacted rapidly with species which could attack the graphite vessel. In the ARP system, the presence of finely divided carbon in the salt could not be tolerated.

2.3.1.5 Shear, HNO_3 Leach

The chop-leach process is currently employed in commercial reprocessing plants for the recovery of uranium and plutonium from spent LWR fuels. In these plants, the fuel is dissolved from short segments of chopped fuel rods by an aqueous nitric acid solution, and, subsequently, the uranium and plutonium are recovered by solvent extraction (Purex Process) as a solution of their nitrate salts. These nitrate solutions are converted to uranium and plutonium oxides. Losses of actinides to the cladding hulls are reported to be as low as 0.05%. The aqueous reprocessing of LWR fuels is well documented and is not described in detail here. Adaptations would permit interfacing it with ARP processing. The most attractive options for conversion of nitrates to oxides are the modified direct denitration process and precipitation, possibly as oxalate, followed by calcination. The modified direct denitration process adds ammonia to the nitrate solution so that, when the solution is evaporated, a complex salt of uranyl nitrate and ammonium nitrate is precipitated. This salt decomposes without going through a liquid phase and yields a finely divided oxide. Precipitations could give, for example, oxalates or ammonium diuranate; both of these could be heated to give oxides. The uranium oxide product from either type of process would be UO_3; this would need reduction to UO_2 before introduction into the ARP process.

This process has potential for use, but is not attractive because it uses aqueous steps and conversion of the initial UO_3 product to UO_2 suitable for the ARP is required. It was carried through the evaluation in order to have a well-demonstrated aqueous process for evaluation and to see how an aqueous process would grade by the methods used.

2.3.1.6 Hydrochlorination

Zircaloy and Zr-U alloys react with anhydrous HCl gas at 700 to 1100 K to produce metal halides. The principal reactions are:

$$Zr_{(s)} + 4HCl_{(g)} \rightarrow ZrCl_{4(g)} + 2H_{2(g)};\ \Delta H_{700} = -128 \text{ kcal, and}$$

$$Sn_{(s)} + 2HCl_{(g)} \rightarrow SnCl_{2(\ell)} + 2H_{2(g)};\ \Delta H_{700} = -29.3 \text{ kcal}.$$

Zirconium tetrachloride is highly volatile and sublimes at 311 K; $SnCl_2$ is less volatile with a boiling point of 885 K. This dejacketing method is known as the Zircex process and was originally developed in anticipation of reprocessing U-Zr alloy fuels.[11,12] Subsequently, work at ANL[13] showed Zircex was applicable to decladding LWR fuels and coupled very nicely to fluid-bed technology and fluoride volatility reprocessing (Fig. 6).

Fuel rods may be declad in an open reactor (i.e., rotary kiln), in a fluidized-bed reactor of an inert, granulated solid such as alumina, or in a molten salt bath. The work at ANL showed whole fuel bundles could be declad in fluid-bed reactors under conditions of decladding (80 vol % HCl, <350°C); no reaction between HCl and UO_2 was observed. The UO_2 pellets remained at the bottom of the fluid bed and were subsequently disintegrated by oxidization in the fluid bed and finally reprocessed by fluoride volatility.

The gaseous $ZrCl_4$ from the initial decladding was converted to oxide by pyrohydrolysis in a separate fluid-bed reactor at 350°C.

$$ZrCl_{4(g)} + 2H_2O_{(g)} \rightarrow ZrO_{2(s)} + 4HCl_{(g)};\ \Delta H_{700} = -26.1 \text{ kcal.}$$

The resultant ZrO_2 powder was finely divided (<100 μm) containing 0.3 to 3 wt % chloride. Experiments to simulate recycle of HCl showed that the presence of 20 vol % H_2 and 1100 ppm H_2O in the recycle stream had no deleterious effect on hydrochlorination rates of U-Zr alloy fuels.

The Zircex process appears capable of producing an oxide feed suitable as feed to ANL's flowsheet for ARP processing. Nickel- or cobalt-based alloys appear to be feasible container materials for reactions involving anhydrous hydrochlorination. All work on Zircex decladding has been on a laboratory scale with unirradiated fuel, and considerable work remains to be done if it finds applications in fuel reprocessing.

Hydrochlorination in a molten salt mixture of ammonium and aluminum chlorides was investigated in the late 1950s as an alternative to the Zircex process, in which gas-phase hydrochlorination is employed.[11,14] The molten salt phase provided good heat transfer, and zirconium was dissolved readily. Under salt reflux conditions at 400°C, the $ZrCl_4$ is volatilized from the melt. This process was never developed beyond the

ORNL DWG 92A-520

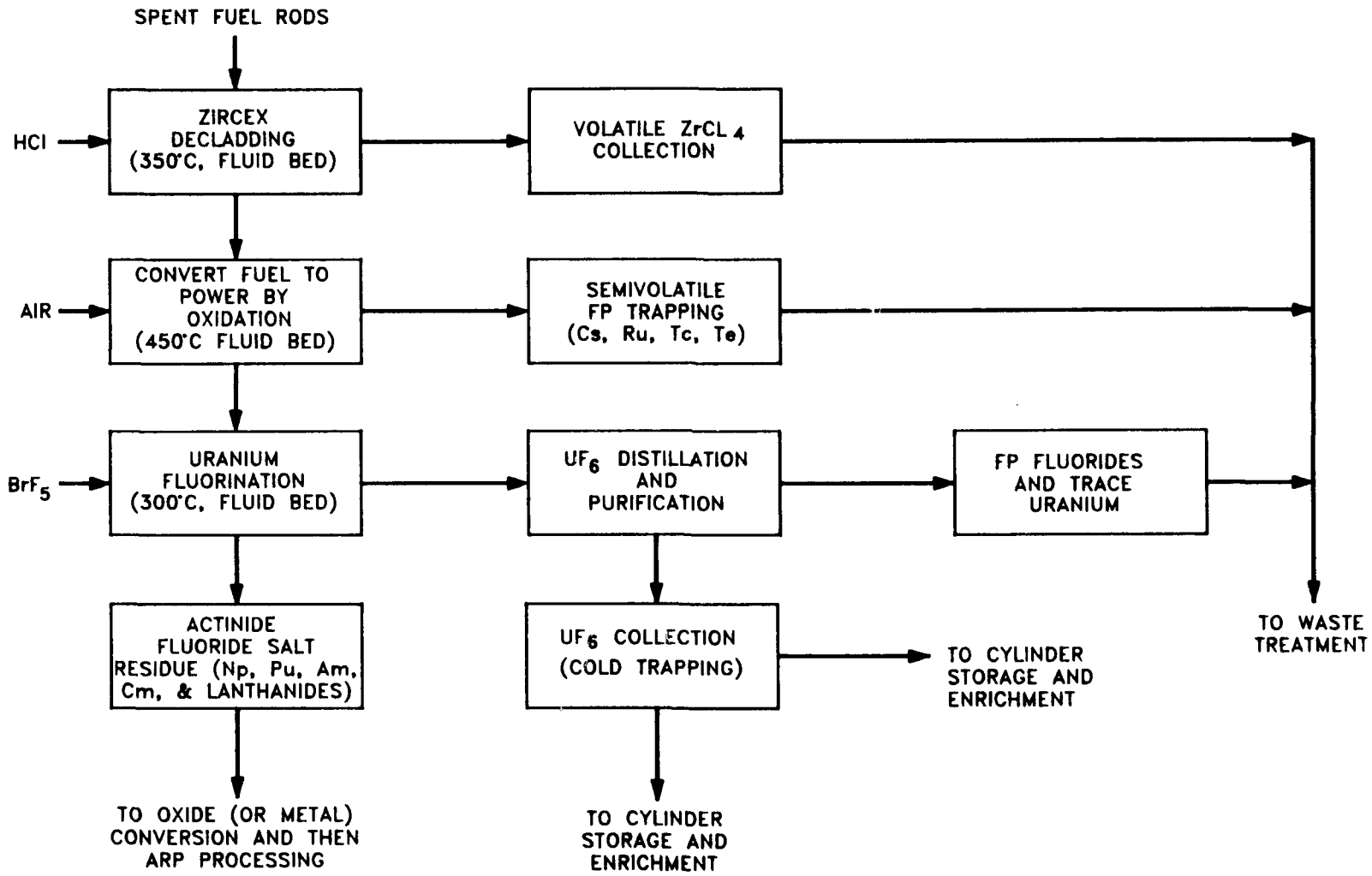

Fig. 6. Zircex decladding and fluoride volatility processing.

laboratory scale. Corrosion problems appeared formidable; only gold and molybdenum were identified as possible container materials at that time. It may be possible to utilize this process using modern structural materials. More recently, separation of zirconium and hafnium tetrachlorides by extraction distillation in a solvent of molten $KCl\text{-}AlCl_3$ at 350 to 500°C has been carried out on a production scale (5500 tons/year of $ZrCl_4$) in France.[15] Thus, it appears that present-day materials may be available for the equipment for the hydrochlorination of Zircaloy in molten salt. However, that remains to be demonstrated when gaseous HCl is also present.

The use of HCl for decladding LWR fuel using a molten $CaCl_2\text{-}CaF_2$ salt would appear to be feasible based on the previous work described above. The potential problems are largely in the corrosion of container materials. The volatilized $ZrCl_4$ will contain some UCl_4 but should be nearly free of other actinides under reducing conditions. This process is attractive if the $ZrCl_4$ can be handled as a low-level waste without major additional treatment (treatment outside the hot cell could be considered without major increases in cost).

2.3.1.7 Expose Fuel, Oxidize, Agitate

Two methods have been utilized to pulverize UO_2 pellet fuels. Both are based on oxidizing cubic-phase UO_2 to the less dense tetragonal phases (U_4O_9 to U_3O_8 composition range). In the voloxidation process,[16,17] the chopped fuel segments are oxidized to release tritium and thus avoid isotopic mixing of tritium in subsequent aqueous reprocessing. The Airox process[18] utilizes oxidation reactions to declad and pulverize oxide fuel so that the powdered oxide can be directly recycled to fuel fabrication after some enrichment makeup. Eitner of these processes can be adapted to provide oxide feed to the molten salt reduction process in the ARP flowsheet. Only the reduction of the higher oxides to UO_2 with H_2 is required to complete the interface. Both processes suffer from the necessity of a long residence time for carrying out the oxidation in a controlled fashion.[16] This necessity results in rather large in-cell space requirements.

Voloxidation method. In the voloxidation process, sheared fuel is heated in an excess of air at 400-500°C. Oxidation converts the UO_2 to U_3O_8, and the associated phase change results in the disintegration of the fuel pellets. The Zircaloy hulls and any

residual fines are washed and sent to waste management after the oxidized fuel is dissolved in the dissolver (Fig. 7). Such a separation system for cladding hulls and disintegrated fuel could be modified to provide LWR oxide fuel feed to the ARP process. For example, after mechanical separation of the cladding hulls and the pulverized fuel core, the hulls might be rinsed with the same molten salt ($CaCl_2$-CaF_2) used in the ANL process. If water were used to rinse the hulls, it would have to be completely removed by evaporation.

Airox process. The Airox process was developed to directly recycle oxide powder from spent fuels using some enriched, fresh UO_2 powder for fissile makeup.[18] In the Airox concept, end pieces are removed from the fuel bundle by shearing and then the individual fuel pins are fed into a continuous rotary punch, which makes the necessary small hole penetrations (2.5 to 4.0 cm spacing along the length of the rod) to provide the pathway for the oxidation reaction. After a single oxidation with air at 400°C, the cladding is ruptured along the row of perforations and the fuel pellets are also pulverized. Complete oxidization to U_3O_8 is not required. Once the transition from the cubic to the less dense tetragonal phase occurs, the associated volume expansion ruptures the cladding and pulverizes the pellets.[18] To recycle the powder directly to fuel fabrication, it is necessary to carry out reduction of the higher oxide to UO_2 in hydrogen at 600°C. Reduction would also be done for ARP processing to reduce the oxygen removal requirements in feed preparation by direct oxide reduction. The Airox process is said to free 99.9% of the UO_2 from the cladding. Some secondary leaching of the split cladding with molten salt or aqueous solutions could probably be used to remove most of the remaining 0.1% of the fuel.

2.3.2 Secondary Fuel Removal Processes

The various mechanical fuel removal options probably remove more than 99% of the fuel, but are unlikely to consistently remove >99.9%. A part of the remainder will be present as adherent dust and some may also be chemically bonded to the zirconium oxide layer on the inside of the fuel pins. These last portions of the fuel will require additional treatments. Some of the treatments to be discussed may remove the alpha contamination from the clad to a level qualifying the fuel hulls as non-TRU waste; these methods should receive special attention. Note that some of the methods given would use an aqueous

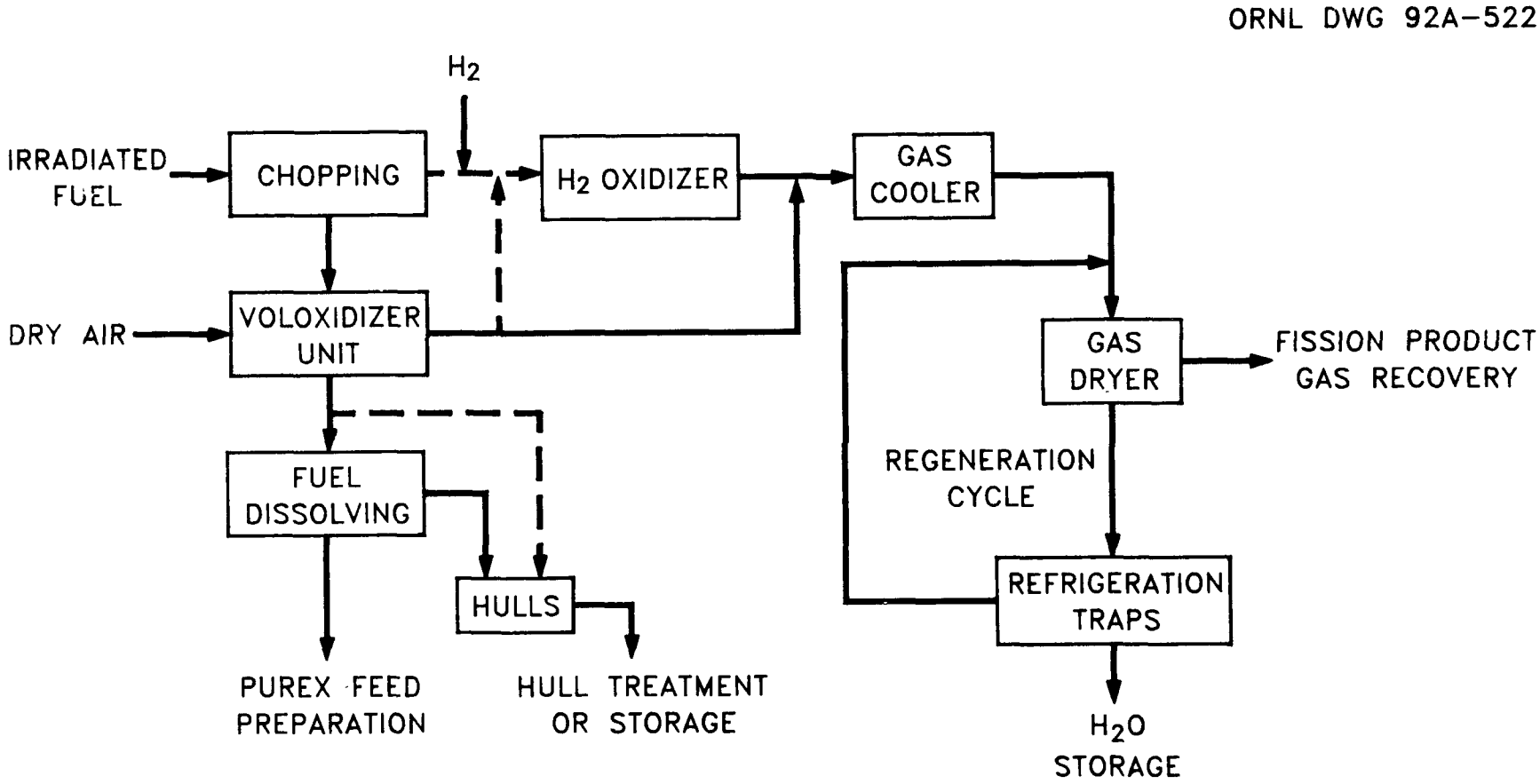

Fig. 7. Voloxidation method.

medium. This is considered to be acceptable for the small quantity of fuel residue being treated.

2.3.2.1 Molten Salt Wash/Leach

It is possible that the fuel remaining in a piece of cladding after an initial mechanical removal step is present as loosely adherent particles. In that case, the particles could probably be removed by washing the interior of the cladding with a molten salt that wets the fuel particles. Addition of fluoride to the salt will cause it to wet the fuel.[20] A good choice would be the 10 mol % CaF_2 in $CaCl_2$ salt used in the ARP process. If necessary, dissolution of the oxide layer on the fuel pin should solubilize all the remaining fuel residue. A rinse with clean salt following solubilization should be capable of removing TRU contamination to any level desired with lower levels requiring more rinsing. This process would work best with the longer cladding segments where adequate rinsing with a minimum of salt would be possible. The requirements of the molten salt used for dissolution of oxide include both that it be capable of dissolving a reasonable amount of oxides from the surface of the cladding and that it not dissolve the bulk of the Zircaloy cladding. Again, it is likely that most of the fuel particles can be removed by a simple washing step without requiring dissolution of oxide.

This system, if it can be developed, would be highly desirable.

2.3.2.2 $ZrCl_4/AcCl_x$ Separation

If the entire fuel pin is reacted with chlorine, a small amount of actinide chlorides may be formed along with fission product, zirconium, and tin chlorides:

$$UO_2 + ZrCl_4 \rightarrow UCl_4 + ZrO_2 .$$

This reaction is likely due to the possibility of zirconium acting as an oxygen "getter" during the chlorination.

Carbon is commonly used for the "getter" when chlorination of actinide oxides is desired; however, the above reaction will proceed to some extent. The actinides must be recovered from the zirconium, fission product, and tin chlorides for transfer to the ARP process. This could likely be done by reducing the mixture; forming UCl_3 and $PuCl_3$,

which have low volatility; and then distilling off the zirconium and tin chlorides. While possible, this process requires substantial development.

2.3.2.3 HF-HNO_3 Leach

Standard leaching methods using a mixture of hydrofluoric and nitric acids could be used if other methods do not appear to be feasible. Some experimental data exist which indicate that such leaching can probably result in a non-TRU cladding waste. If such a method were used, the dissolved actinides could be recovered by precipitation followed by calcination or by direct calcination. The uranium would be in the form of UO_3, but the quantity would be so low that reduction to UO_2 with hydrogen prior to introduction to the ARP would not be justified. It is likely that, if this method were to be used, it would be desirable to transfer the empty fuel hulls out of the ARP cell and do the secondary leaching in a separate facility.

This method is fully developed; it should be considered a backup to a wash/leach with a molten salt.

2.3.2.4 Zirconium Cleaning

When the Zircaloy is removed from the fuel by the electrotransport method, it can be deposited as zirconium on a solid cathode or as zirconium dissolved in cadmium at a cadmium cathode. In the first case, it is likely that the deposited zirconium will occlude either dissolved fuel material or particulates from the fuel. If this happens, the zirconium will need further processing, possibly by an additional electrotransport step using a clean salt charge. Other cleaning methods may be more desirable but were not identified for this report. If the second type of cathode is used, the transported zirconium should have a much lower level of actinide contamination. Then the zirconium would be recovered by retorting the cadmium alloy. The cadmium cathode appears to be the preferred option.

Methods for achieving a clean zirconium deposit will need testing if electrotransport is seriously considered for the primary treatment process.

2.3.2.5 $ZrCl_4$ Waste Processing

$ZrCl_4$ that has been separated from the fuel by either hydrochlorination or chlorination may not be an acceptable waste form. If added to the ARP salt waste, it would greatly increase the chloride waste volume. It is possible that the $ZrCl_4$ will be a low-level waste and can be disposed separately; this should be examined. If further processing is needed, the process is assumed to be conversion to ZrO_2 by either reacting with O_2 (regenerating Cl_2) or with water vapor (regenerating HCl), as shown here:

$$ZrCl_4 + O_2 \rightarrow ZrO_2 + 2Cl_2, \text{ or}$$

$$ZrCl_4 + 2H_2O \rightarrow ZrO_2 + 2\ HCl\ .$$

A similar process to that with oxygen is used commercially for producing TiO_2 pigment. A number of possible problem areas, including corrosion, use of undesirable reactants, and generation of a fine ZrO_2 powder, exist.

If direct disposal of the $ZrCl_4$ waste is not acceptable, development of the chloride-to-oxide conversion process does not appear to be needed at this time.

2.3.2.6 Nitrate-to-Oxide Conversion

If leaching with nitric acid or nitric acid/hydrofluoric acid mixtures is used, the nitrates formed will need to be converted to oxides. Two general methods that could be used are (1) direct nitrate conversion by thermal decomposition of the nitrates, or (2) precipitation followed by calcining of the precipitate. In cases in which hydrofluoric acid is present, precipitation is probably the best route for avoiding corrosion problems. The calcined oxides, in either case, will have O/U ratios >2 and may need reduction. Very small quantities of higher-valence oxide are probably acceptable in the ARP system.

This process does not need additional development.

2.3.3 Metal Cutting (Fuel Plenum)

The feed to the ARP process has been assumed to be individual fuel pins. This eliminates much of the cutting or shearing operations required for whole bundles. However, it is still desirable to remove the empty plenum end of the fuel pin and the fuel compression spring by some method that does not pinch the tube shut, as would be

expected if it were sheared. It may also be desirable to cut the fuel pins into shorter lengths and to cut off the closed end of the fuel pin.

The fuel plenum hardware is expected to be at activity levels that qualify it as Class A low-level waste,[21] thus potentially simplifying its disposal. It is a desirable objective that the fuel plenum structure be removed prior to any other operation that has the potential to contaminate the plenum structure. The compression springs, typically made of Inconel-718, will have high levels of activated nickel and niobium and are expected to be classified as greater-than-Class-C (GTCC) low-level waste,[21] which currently is assumed to go to the repository. Due to the relatively low volume of the compression springs, this secondary GTCC waste stream is not expected to be a significant cost driver.

2.3.3.1 Saw, Abrade

Abrasive saws have been used extensively for cutting fuel elements.[22] The cutting has been done both in air and under water. Cutting under water has the advantage of minimizing the spread of particulates and helps prevent fire problems with the finely divided Zircaloy powder. Zircaloy fires should not be a problem in the ARP system because the cell contains an inert gas. The design of the machine needs to allow easy replacement of the cutting disk. Collection of the powdered Zircaloy and prevention of accumulation of such powder in areas of the machine need careful attention since large numbers of submicron particles are generated. Because of its simplicity and complete development, this is the method of choice for removal of excess hardware.

2.3.3.2 Laser

Laser cutting has been developed at ORNL for removing hardware from fuel elements.[23] This system is capable of cutting without generating significant fines and has been developed to a reasonable level. It has the distinct advantage that the bulk of the complex hardware is outside the hot cell where maintenance would be simpler; only the holding mechanisms and the laser cutting head are within the cell. Fine control of cutting depth could be a problem. The method appears too complex for simple removal of excess hardware.

2.3.3.3 Wire Electron Discharge Machining (Wire EDM)

In this technique, a brass wire electrode passes by the metal being cut and discharges electrons to the metal. A very narrow cut is obtained. The wire passes the workpiece once and is then discarded. The wire ranges from 2 to ~12 mils in diameter, with faster cutting rates being possible with the heavier wires. Very long wire lengths, up to several thousand feet, can be used. Maintenance would appear to be fairly easy, with the wire being replaced by simply replacing two spools that contain the wire. Normal operation uses a water spray to supply a dielectric medium and probably to cool the wire; this is a disadvantage. The cutting rate for Zircaloy has not been established at this time. The cutting rate of stainless steel looks reasonably good, with a rate of 28 in./h for a 1-in.-thick specimen.[24] This technique could also be used to cut the individual fuel pins. The use of the water spray and the required additional development are significant disadvantages of the method.

2.3.3.4 Shear

Mechanical shearing of fuel, both whole assemblies and individual pins, is well developed. Among potential problems are the generation of fines, which can be difficult to remove from the shearing equipment, and the pinching off of the last segments of a pin where the fuel is absent (plenum end). Shearing the pins where fuel is present does not completely close the segments. The equipment can be designed to make recovery of fines easier. Shearing into the empty plenum should be avoided to allow high recoveries of fuel values. The plenum end should be cut off by one of the other methods.

3. PROCESS EVALUATIONS

In the ideal case, evaluation of processes would be based on economics. The costs include those of development, construction (including hot-cell space requirements), maintenance, operation, waste handling, down time, and ultimate disposal of waste. The time value of money would also need to be considered. Obviously, the processes to be considered in this report cannot be evaluated by a rigorous economic analysis. Instead, we have chosen some criteria which can be examined based on current judgements of the

capabilities of the processes to be evaluated and which reflect the elements of the cost concerns. We have attempted to include all the major process steps required for an overall decladding operation which are compatible with the ARP process. Although the assignment of numerical rankings to processes is, necessarily, somewhat subjective, two major factors will be seen to be most important in the rankings of the processes:

1. number of major process steps, with fewer steps favored; and
2. lower ranking of processes with aqueous steps as compared with processes without aqueous steps.

That this is not always true will be seen for the chlorination case, where complications of the process were thought to be more than usually detrimental.

3.1 DESCRIPTION OF CRITERIA

The initial guidance was that any process to be considered must meet the six criteria given in Table 1. However, in conversations between ORNL and ANL, in December at ANL and at the waste workshop at ORNL, it was clear that release of the volatile fission products into the cell off-gas was acceptable. This may need additional consideration, but, for the time being, the LWR decladding effort should not have to meet the criterion concerning volatile fission-product release.

The first, second, and third original criteria in Table 1 are self-explanatory. For the original fourth criterion, most primary processes will fail. This criterion should only require that the primary process is compatible with the use of some identified secondary process which will meet the criterion. This criterion should be restated as:

- The heavy metal recovery in the overall process, including primary and secondary treatment, must be >99.9%.

The original fifth criterion in Table 1 could possibly be met with containment of any vapors generated in the head-end, but this would not be desirable. The ability to meet this criterion without invoking a separate containment system would be an advantage to be examined in ranking processes.

The original sixth criterion restricts the wastes to dry materials; likely candidates that would meet the criterion are metal hulls, oxides, and chlorides. This would guide us to include any process steps to convert intermediate forms to these types within the

bounds of the proposed process(es). The ability to operate without conversion of the waste forms would be an advantage to be considered.

The five primary criteria, as modified and used in this evaluation, are then:

1. The feed to the ARP process must be oxide (UO_2).
2. The feed to the ARP processes must be dry.
3. The heavy metal recovery in the overall process, including primary and secondary treatment, must be >99.9%.
4. No vapors that are incompatible with the ARP cell atmosphere can enter the cell.
5. The cladding and fuel assembly wastes must be compatible with the ARP plant wastes.

3.1.1 Secondary Criteria for Ranking Processes

The secondary criteria can either be "pass or fail" criteria or can be such that a spectrum of desirabilities are possible. For the latter category, the various processes will be listed in order of desirability.

In the past, we have considered generation of Zircaloy fines to be a significant disadvantage due to the potential for combustion. Since the ANL cell will have an inert gas atmosphere, this should be downgraded to a minor disadvantage and not considered a criterion for ranking processes.

The only pass/fail criterion is generation of vapors; as mentioned, it is probably possible to contain such vapors, but it is undesirable. Secondary criteria that will be considered follow:

1. The process does not generate vapors that require secondary containment (a pass or fail criterion).
2. The process minimizes high-level and TRU waste (a graded criterion) (Minimum Waste).
3. The process is reliable to operate (a graded criterion) (Equipment Reliability).
4. The process technology is not complex (a graded criterion) (Process Simplicity).
5. The process occupies a minimal cell volume (a graded criterion) (Minimum Cell Volume).
6. Maintenance of the process equipment is simple or replacement is easy and cheap (a graded criterion) (Maintainability).

Another important criterion would be the kinetics of an electrochemical or chemical process or the rate of a mechanical process in pins/unit time. Accurate assessment of this criterion is not possible at this time. A more exact examination of the rate problem will be needed because the rates determine the number of parallel decladding lines required.

The amount of development required for a process and the probability of technical success are also important. For the initial evaluation of the processes, we have chosen to assume that each process can be successfully developed. After elimination of the least desirable processes, the remaining ones will be examined for required development efforts and the probability of technical success.

3.2 EVALUATION OF PROCESSES BY SELECTED CRITERIA

Many potential processes were examined, at least cursorily, in these evaluations. An initial cut was made that resulted in the elimination of some processes from consideration. All the processes that were eliminated from consideration without a full evaluation are described in Appendix A. Sufficient details of the processes are given to allow a fuller evaluation if desired. Also given are the reasons for which the processes were eliminated from evaluation at this time.

It is suggested that the processes be graded on the criteria of Sect. 3.1.1 with the criteria being grouped into the one "pass or fail" criterion and those in which the processes are graded one against the other (graded criteria). Any grading process is open to criticism no matter how it is set up. The actual rankings that were obtained in this exercise should not be considered absolute, but only as a guide as to the most and least desirable processes.

The processes that are being considered evolved from discussions at ORNL and ANL and are described in Sect. 2.3 for those that are being evaluated and in Appendix A for those that were initially eliminated from consideration.

For the "pass or fail" criterion, the processes meeting the criterion are the following:

Primary process

Roller-straightener

Expose fuel, agitate

Electrotransport

Secondary process

Molten salt wash/leach

Zirconium cleaning

$ZrCl_4/AcCl_x$ separation

Metal cutting (fuel plenum)

Laser

Saw, abrade

Shear

For the "graded criteria" (Table 3), the processes are listed with numbers indicating the order of desirability. Processes with the same number are considered to be nearly equal. In these tables, both mechanical and chemical processes are ranked. The category, "Primary Process," includes the primary (~99%) removal of fuel from the cladding for mechanical processes and is the major chemical treatment for chemical processes. The category "Secondary Process" includes the removal of fuel to >99.9% for mechanical processes (this secondary fuel removal is often a chemical treatment) and the additional chemical steps necessary for a primary chemical processing method. For instance, if the fuel was dissolved from the cladding in nitric acid, a secondary process would be nitrate-to-oxide conversion.

Table 3. Process grading by criteria[a]

	Minimum waste	Equipment reliability	Process simplicity	Minimum cell volume	Maintain-ability
Primary process					
Roller straightener	1	3	1	1	1
Expose fuel/agitate	1	2	2	1	2
Expose fuel/oxidize/ agitate	1	1	4	2	3
Electrotransport	2	3	1	1	2
Hydrochlorination	2	3	3	1-2	4
Chlorination	2	2	3	1-2	5
Shear and HNO_3 leach	2	1	1	1-2	2
Secondary process					
Molten salt wash/leach	1	1	2	1	2
Zirconium cleaning	1	2	2	5	1
$ZrCl_4$ waste processing	1	2	2	3	2
HF-HNO_3 leach	2	1	1	4	1
Nitrate-to-oxide conversion	2	2	2	3	2
$ZrCl_4/AcCl_x$ separation	3	1	2	2	1
Metal cutting (fuel plenum)					
Wire EDM	1	2	2	3	3
Laser	2	2	3	2	2
Saw, abrade	2	1	1	1	1
Shear	3	3	3	3	4

[a]Processes are ranked in order of desirability with "1" being the best, "2" second best, and so on.

3.3 NUMERICAL RANKING OF PROCESSES

In the evaluation of the processes, they were ranked by adding the place numbers for each plus an additional point for a "fail" of the pass/fail criterion. Weighting factors could be assigned to different categories, but the justification for such weighting factors is not apparent. The processes, without weighting factors, then have the following point totals:

Primary fuel removal or processes

Roller-straightener	=	7
Expose fuel, agitate	=	8
Electrotransport	=	9
Shear, HNO_3 leach	=	8.5
Expose fuel, oxidize, agitate	=	12
Hydrochlorination	=	14.5
Chlorination	=	14.5

Secondary fuel removal or processes

Molten salt wash/leach	=	7
$ZrCl_4/AcCl_x$ separation	=	9
$HF\text{-}HNO_3$ leach	=	10
Zirconium cleaning	=	11
$ZrCl_4$ waste processing	=	11
Nitrate-to-oxide conversion	=	12

Metal cutting (plenum)

Saw, abrade	=	6
Laser	=	11
Wire EDM	=	12
Shear	=	16

For the Primary Fuel Removal or Processes step, the option "Expose fuel, oxidize, agitate" should be eliminated because the similar (without the oxidation step) process, "expose fuel, agitate," is ranked higher; the higher-ranked option would only require shearing into shorter lengths. The others are possibly worth consideration.

The Secondary Fuel Removal or Processes options are, to a large extent, specific for a particular primary step.

For Metal Cutting (Plenum), the best choice appears to be simple sawing or abrading. This is the only option to be considered further, since it also requires no additional development.

The actual decladding process requires a combination of a primary process and one or more secondary processes. The possible combinations in the order of best to worst with the numerical scores (summed) and the estimated amount of development required (H=high; M=moderate; L=low) are as follows:

	Score	Development needed
1. Roller-straightener + molten salt wash/leach =	14	H-M
2. Hydrochlorination	14.5	H
3. Expose fuel, agitate + molten salt wash/leach =	15	M
4. Electrotransport + zirconium cleaning =	20	H
5. Chlorination + $ZrCl_4/AcCl_x$ separation =	23.5	H
6. Hydrochlorination + $ZrCl_4$ waste =	25.5	H
7. Shear, HNO_3 leach + nitrate-to-oxide conversion + molten salt wash/leach =	27.5	M
8. Roller straightener + HF-HNO_3 leach + nitrate-to-oxide conversion =	29	M-L
9. Expose fuel, agitate + HF-HNO_3 leach + nitrate-to-oxide conversion =	30	L
10. Shear, HNO_3 leach + HF-HNO_3 leach + nitrate-to-oxide conversion =	30.5	L
11. Chlorination + $ZrCl_4/AcCl_x$ separation + $ZrCl_4$ waste =	34.5	H

3.4 DISCUSSION OF OPTIONS

Among the combined decladding processes given, it is reasonable to eliminate from consideration the last combination (11), since it has the poorest score and requires high development. Note that option 11, with the special treatment of the $ZrCl_4$ waste eliminated, ranks as number 5.

Options 1, 3, and 7 have, in common, the recovery of the minor amounts of fuel using washing or leaching by a molten salt. A necessary development for these processes would be identification and testing of candidate salts for washing or leaching the Zircaloy tubing. Salts for washing loosely adherent fuel particles from the cladding need to wet the fuel particles; chloride salts containing some fluoride are suitable.[20] It may be necessary to dissolve the oxide layer from the cladding for complete recovery of fuel values; in this case, the salts would need to be capable of dissolving a small amount of oxide without dissolving a substantial quantity of Zircaloy. It is assumed that following treatment with a leaching salt, the tubing would be rinsed with the same or another salt to remove the salt residue, which contains some dissolved fuel, from the tubing. The remaining salt residue from the wash or rinse should contain very low fuel value, but may complicate the handling of the cladding waste. The ANL concept is to incorporate the hulls into a low-melting alloy with the bulk of the salt being recovered by skimming. This would eventually need examination. Option 1 also requires the development of the roller-straightener method. The Japanese work indicates that the method has promise.

The second-highest-ranked option, hydrochlorination, would vaporize the Zircaloy leaving the bulk of the fuel oxides for processing. The major problems in this option are container materials and, possibly, transport of a salt-fuel slurry. The $ZrCl_4$ waste is assumed to be directly disposable as a low-level waste (probably slightly contaminated with uranium) or to be incorporated into the ARP waste stream. If the waste needs a separate treatment, for instance conversion to ZrO_2, the overall process is much less attractive and is listed as option 6.

The third option uses shearing the fuel pins to short lengths and agitation for removal of the bulk of the fuel followed by a molten salt wash/leach. The seventh option uses shearing into longer lengths for bulk fuel removal by nitric acid leaching, nitrate-to-oxide conversion, and, finally, a molten salt wash/leach for recovery of residual fuel values. These options are of interest if the roller-straightener is not a feasible method, but the molten salt wash/leach method is successful. The preferred method, of these two, would be to shear into short lengths and remove the bulk of the fuel by agitation due to the complications of handling aqueous solutions in the ARP cell (or doing the decladding operation in a separate major hot cell) plus the necessity of a nitrate-to-oxide conversion step.

Option 8 also uses the roller-straightener, with the fuel residue being recovered by leaching with HF-HNO_3 solution and nitrate-to-oxide conversion. This would be an acceptable option if the roller-straightener is found to be a good approach, but the wash/leach with a molten salt is not feasible. It could be necessary to remove the cladding containing the minor fuel residue from the ARP cell to perform the aqueous leaching step. The recovered fuel values would then be converted to oxides and reintroduced into the ARP cell. The cladding would likely be a non-TRU waste and would be prepared for disposal by compacting or some other applicable technique. This method would not require additional development beyond that already required for the higher-rated options.

The electrotransport method (option 4) fits well with the ARP processing system. Among the concerns regarding the process is the decladding rate that can be attained. This rate should be determined unless it can definitely be shown, theoretically, to be too slow. Inclusion of fuel particles in the zirconium deposit should be minimized by using a cadmium cathode; if actinides are not reduced into the cathode pool, the zirconium can be simply separated from the cadmium by retorting. A test of the concept would eventually be necessary.

Chlorination of the entire fuel pin followed by separation of the $ZrCl_4$ from any actinide chlorides formed is the fifth-ranked option. Most of the oxide fuel should not be converted to chlorides because this requires addition of carbon or other oxygen "getter." It is suspected that the zirconium in the system will act as an oxygen getter and will allow chlorination of uranium and other actinides, a serious disadvantage. This relatively high ranking also assumes that the separated $ZrCl_4$ would be suitable for direct disposal or incorporation into the ARP salt waste.

Hydrochlorination to volatilize the Zircaloy from the fuel followed by conversion of the $ZrCl_4$ (and tin chloride) to an oxide form for ultimate disposal ranks sixth.

Options 7, 8, 9, and 10 can be considered fallback positions in case the fuel recovery cannot be accomplished entirely by nonaqueous methods. All these methods require at least one aqueous treatment and would not be considered unless the higher-ranked methods cannot be used. Options 9 and 10 would require little or no development.

4. SUMMARY OF RECOMMENDED NEAR-TERM DEVELOPMENT

4.1 TECHNICAL MERIT OF IDENTIFIED OPTIONS

The roller-straightener, molten salt wash/leach, hydrochlorination, and electrotransport methods all appear to merit some developmental efforts, based on the criteria used. However, additional examination of the likelihood of success of the processes is also necessary. The roller-straightener has been substantially and successfully developed by Japanese workers. The method appears to have a fairly high probability of success and would probably be the simplest method for recovery of the bulk of the fuel. The molten salt wash/leach for secondary recovery of fuel would be particularly attractive if, as seems likely, sufficient recovery of residual fuel values is possible with a wash using a salt which wets fuel particles; a leaching salt would be significantly less desirable. The hydrochlorination method was selected based on a simple incorporation of the waste $ZrCl_4$ into an ARP waste stream. This appears unlikely. In addition, the process is relatively complex with a number of potential problem areas. The electrotransport method, while interesting and likely to work, is considered to be of lower priority due to its complexity.

The final recommendation is to pursue the roller-straightener technique, with the secondary cleanup option being washing/leaching with a molten salt. The primary effort for secondary cleaning will be washing with a salt that wets fuel particles.

4.2 INITIAL EFFORTS ON DECLADDING

A meeting during March 1992 between ORNL and ANL staff resulted in the following plan for near-term development.

Repetition of the Japanese work should be minimized. To the extent feasible, Japanese data and roller-straightener designs should be adopted as a starting point for additional studies. The initial studies would test, with simulated fuel, any different approaches identified for the U.S. program. Irradiated fuel testing appears necessary to fully qualify the method.

During the remainder of FY 1992, information-gathering efforts are recommended. Experimental work would begin in FY 1993. General recommendations are as follows:

1. Some additional information from the Japanese is desirable, including whether the roller-straighteners tested were commercial models and details of their method of embrittlement and testing of the degree of embrittlement of cladding. The first item is of the greatest importance.
2. Data on experience with high-burnup LWR fuels will be accumulated. The manufacturers must be doing tests to qualify fuels for extensive burnup. They should have data on cladding embrittlement and fuel-clad interactions. As a part of this effort, the availability of segments of irradiated and mechanically cleaned cladding from these studies will be determined.
3. Existing methods and equipment that can be used to test embrittlement of cladding will be determined.
4. The availability of facilities at ORNL for both cold and radioactive work will be explored. Cold work could take place in hoods or other enclosed areas while radioactive work <u>might</u> be possible in existing hot cells.
5. Additional information on roller-straighteners will be obtained from ORNL Metals and Ceramics Division personnel and from manufacturers.
6. Sources for simulated fuel will be identified. The Robotics and Process Systems Division at ORNL had simulated fuel manufactured with both Al_2O_3 and UO_2 pellets in the past. These are the same types of simulated fuels tested by the Japanese.
7. Some irradiated cladding may be available at ORNL from past NRC studies. If it is available, it will be obtained for testing.

Experimental work would start in FY 1993. Simulated fuel would be tested in a cold facility at ORNL to corroborate the Japanese work and to examine features that have not been reported. Hot fuel would be identified, and arrangements for obtaining it would commence. A likely fuel source is the BR3 reactor, which uses short fuel elements. These elements could be tested intact without the necessity of cutting to a usable length in a special facility; available hot facilities at ORNL cannot accept full-length fuel pins for testing (a cell length exceeding 25 ft would be required). The target date for obtaining irradiated fuel would be the end of FY 1993.

5. REFERENCES

1. R. D. Pierce, J. P. Ackerman, G. K. Johnson, T. P. Mulcahey, D. S. Poa, "Recycle of LWR Actinides to an IFR," in **Proceedings of the Third International Conference on Nuclear Fuel Reprocessing and Waste Management**, RECOD 91, Vol I, April 14-18, 1991, Sendai, Japan.
2. J. C. Mailen (Compiler), *Evaluation of Conceptual Flowsheets for Incorporating LWR Fuel Materials in an Advanced Nuclear Fuel Cycle*, ORNL/TM-11466, August 1990.
3. C. W. Forsberg, *Spent Fuel Reconstitution, Consolidation, and Disassembly, K/ITP-361*, January 1991.
4. R. G. Wymer and B. L. Vondra (Eds.), **Light Water Reactor Nuclear Fuel Cycle**, CRC Press, Boca Raton, FL, 1981, Chapters 2-5.
5. A. A. Abdel-Rassoul, H. R. Higgy, and F. H. Hammad, "Decladding of Nuclear Fuel by Rolling-Straightener Technique, *J. Nucl. Energy* 551 (1969).
6. F. H. Hammad, H. R. Higgy, and M. S. E. El-Mahdy, "Technical Report: Effect of Some Nuclear Fuel Rod Parameters on Mechanical Decladding by Roller Straightener Technique," *J. Nucl. Sci. Eng.* 517 (1974).
7. Y. Takashima, M. Kumagai, S. Matsumoto, M. Wakabayashi, and K. Fukudome, *New Concept on the Head End of Purex Process Toward the Next Century*, 569, RECOD'87.
8. K. Okada, "Separation Method for a Spent Nuclear Fuel Rod," European Patent Application No. 85302514, April 10, 1985; Japanese Patent No. 84140163, July 5, 1984.
9. G. Matcheret and M. Bourgeois, *Mechanical Decladding of Stainless-Steel-Clad Oxide Fuels*, ORNL-TR-2788, translation of CEA-R-4469, August 1973.
10. P. A. Haas, D. D. Lee, and J. C. Mailen, *Reaction of Uranium Oxides with Chlorine and Carbon or Carbon Monoxide to Prepare Uranium Chlorides*, ORNL/TM-11792, November 1991.
11. F. L. Culler and R. E. Blanco, "Dissolution and Feed Preparation for Aqueous Radiochemical Separation Processes," pp. 259-90 in **Proc. Second International Conference on the Peaceful Uses of Atomic Energy, Geneva, September 1958**, A/CONF.15/P/1930.

12. R. E. Blanco and C. D. Watson, "Head-End Processes for Solid Fuels," pp. 23-106 in **Reactor Handbook**, Vol 2, 2nd ed., S. M. Staller and R. B. Richards (eds.), Interscience, New York, 1961.

13. J. J. Barghusen, A. A. Jonke, N. M. Levitz, M. J. Steindler, and R. C. Vogel, "Fluid-Bed Fluoride Volatility Processing of Spent Fuel Reactor Materials," pp. 347-98 in **Progress in Nuclear Energy**, Series III, Vol 4, Process Chemistry, C. E. Stevenson, E. A. Mason, A. T. Gresky (eds.), Pergamon Press, 1970.

14. G. Carlsen, "The Head-End Treatment of Zircaloy 2-Clad Uranium Dioxide Fuel Elements," pp. 209-311 in **Proc. of Symposium on the Reprocessing of Irradiated Fuels, Brussels, 1963**, Organization of Economic Cooperation and Development, Paris, 1963.

15. L. Moulin, P. Thouvenin, and P. Brun, "New Process for Zirconium and Hafnium Separation in Zirconium," pp. 37-44 in the **Nuclear Industry ASTM Special Publication 824**, D. G. Franklin and R. B. Adamson (eds.), ASTM, Philadelphia, PA, 1984.

16. *Alternatives for Managing Wastes from Reactors and Post-Fission Operations in the LWR Fuel Cycle*, Vol 2, ERDA-76-43, May 1976, p. 13.21 to 13.25.

17. J. H. Goode, *Voloxidation, Removal of Volatile Fission Products from Spent LMFBR Fuels*, ORNL/TM/3723, August 1973.

18. L. F. Grantham, R. G. Clark, R. C. Hoyt, and J. R. Miller, "Airox Dry Pyrochemical Processing of Oxide Fuels: A Proliferation-Resistant Reprocessing Method," pp. 219-32 in **Actinide Separations**, ACS Symposium Series 117, J. D. Navratil and W. W. Schulz (eds.), American Chemical Society, Washington, DC, 1980.

19. M. A. Vest, Argonne National Laboratory, personal communication to W. D. Bond and J. C. Mailen, Oak Ridge National Laboratory, March 12, 1992.

20. R. D. Pierce, Argonne National Laboratory, personal communication to W. D. Bond and J. C. Mailen, Oak Ridge National Laboratory, March 12, 1992.

21. J. E. Cline, *Greater-Than-Class-C Low Level Radioactive Waste Characterization. Appendix G: Evaluation of Potential for Greater-Than-Class-C Classification of Irradiated Hardware Generated by Utility-Operated Reactors*, DOE/LLW-114G, August 1991.

22. S. M. Stoller and R. B. Richards, eds., **Reactor Handbook**, 2nd Ed., p. 35-38, Interscience Publishers, Inc., New York, 1961.

23. Personnel of the Robotics and Process Systems Division, Oak Ridge National Laboratory, personal communication to G. E. Michaels and J. C. Mailen, Oak Ridge National Laboratory, November 6, 1991.

24. J. D. Weisgerber, Oak Ridge National Laboratory, personal communication to J. C. Mailen, Oak Ridge National Laboratory, November 12, 1991.

25. W. Stoll and K. Ennerst, "Method for Reprocessing a Nuclear Reactor Fuel Rod," U.S. Patent No. 4,514,364, April 30, 1985.

26. R. A. Lorenz, Oak Ridge National Laboratory, personal communication to J. C. Mailen, Oak Ridge National Laboratory, November 12, 1991.

27. P. Hofmann, D. Kerwin-Peck, and P. Nikolopoulos, "Physical and Chemical Phenomena Associated with the Dissolution of Solid UO_2 by Molten Zircaloy-4," pp. 810-34, in **Zirconium in the Nuclear Industry**, ASTM Special Technical Publication 824, D. G. Franklin and R. B. Adamson, eds., ASTM Publication Code Number 04-824000-35, 1984.

28. G. W. Parker, Oak Ridge National Laboratory, personal communication to J. C. Mailen, Oak Ridge National Laboratory, November 11, 1991.

29. S. M. Stoller and R. B. Richards, eds., **Reactor Handbook**, 2nd ed., p. 86-87, Interscience Publishers, Inc., New York, 1961.

30. J. L. Swanson, "The Zirflex Process," pp. 289-303 in **Progress in Nuclear Energy, Series III, Vol 3, Process Chemistry**, F. R. Bruce, J. M. Fletcher, and H. H. Hyman (eds.), Pergamon Press, 1961.

31. J. R. Bowers and K. L. Rohde, "Aqueous Processing of Highly Enriched, Zirconium Based, Nuclear Reactor Fuels" pp. 171-212 in **Progress in Nuclear Energy, Series III, Vol 4, Process Chemistry**, C. E. Stevenson, E. A. Mason, and A. T. Gresky (eds.), Pergamon Press, New York, 1970.

32. L. M. Ferris, *Decladding of PWR Blanket Fuel Elements with Aqueous Ammonium Fluoride Solutions*, ORNL-2558, September 1958.

33. L. M. Ferris, *Zirflex Process for PWR Blanket Fuel II. Revised Flowsheet*, ORNL-2940, 1960.

34. E. M. Vanderwall, H. T. Hahn, and D. A. Bauer, *Salt-Phase Chlorination of Reactor Fuels II. Arco Process Definition and Scoping Studies*, IDO-14525, 1960.

35. *Alternatives for Managing Wastes from Reactors and Post-Fission Operations in the LWR Fuel Cycle*, Vol 2, ERDA-76-43, May 1976, p. 7.34 to 7.40.

36. R. K. Steunenberg and R. C. Vogel, "A Survey of Recent Work in the United States on Fluoride Volatility Processing of Spent Fuels," pp. 438-51 in **Proc. of Second International Conference on Peaceful Uses of Atomic Energy, Geneva, September 1958**, A/CONF/15/P/2388.

37. D. F. McLaughlin, "Thermodynamics Modeling of the $3(Zr,Hf)Cl_4$ - $2POCl_3$ Distillable Molten Salt Compositions," pp. 131-41 in **Molten Salt Chemistry and Technology**, M. Chemla and D. DeVilliers, (eds.), Trans Tech Publications, Switzerland, 1991.

38. V. P. Caracillio and J. H. Owen, "Electrolytic Dissolution of Power Reactor Fuel Elements" pp. 81-120 in **Progress in Nuclear Energy Series III, Vol 4 Process Chemistry**, C. E. Stevenson, E. A. Mason, and A. T. Gresky (eds.), Pergamon Press, 1970.

39. R. Baboin, D. L. Hill, and R. A. Bailey, "Electrochemical Studies on Zirconium and Hafnium in Molten LiCl-KCl Eutectic," *J. ElectroChem. Soc.* **112**, 1965, 1221-24.

40. M. E. Whatley, P. A. Haas, L. E. McNeese, A. D. Ryon, J. C. Suddath, and C. D. Watson, *Unit Operations Quarterly Progress Report, October-December 1966, Chemical Technology Division*, ORNL-4094, February 1968.

41. C. W. Forsberg, "Container for Reprocessing and Permanent Storage of Spent Nuclear Fuel Assemblies," U.S. Patent No. 5,098,645 (Filed Mar. 6, 1991).

42. W. D. Box, Oak Ridge National Laboratory, personal communication to J. C. Mailen, Nov. 4, 1991.

43. D. Bond and A. Kearsey, *Ultrasonic and Immersion Cleaning: a Comparison using Aqueous and Fluorocarbon Solvents*, AEEW-R 1903, Winfrith, November 1984.

APPENDIX A. DESCRIPTION OF PROCESSES THAT WERE NOT EVALUATED

This appendix contains descriptions of the processes that were given a brief consideration, but were not deemed sufficiently attractive to be included in the evaluation effort. The reasons for rejecting these processes are discussed.

A.1 PRIMARY FUEL REMOVAL PROCESSES THAT WERE NOT EVALUATED

A.1.1 Heat Fuel Pin to Expand Cladding

It is reported that Zircaloy tubes can be expanded to allow removal of the fuel by heating to 1200°C.[25] LWR fuel has been heated at ORNL to high temperatures as part of NRC evaluations of LWR accidents.[26] According to these data, the fuel cladding can be expanded by heating to only 800-900°C. A problem is blowout at weak areas of the cladding. It is recommended that the fuel be confined as in a stainless steel form to prevent the blowout. The literature indicates that expansions of 10% in diameter can be attained. Lesser expansions are indicated by ORNL data. During heating much of the tritium will migrate into the Zircaloy cladding if the Zircaloy is not oxidized. Significant other volatile fission products will be released from the fuel at the high temperatures. If the fuel pin remains intact, the volatile fission products should be retained. The literature indicates that shaking will remove 99.5% of the fuel following the cladding expansion. The heating operation possibly would anneal the tubing to relieve embrittlement. Thus, a rolling operation, if required, could be more feasible. The process will not work for the small number of fuel pins which are "leakers". These pins would have to be sent directly to the ARP process; the number of leakers should be small. The method would also require complex equipment to restrain the tubes during heating and could be relatively slow. These drawbacks make the process relatively unattractive.

A.1.2 Decladding by Melting or Alloying

Tests at ORNL have examined melting of LWR fuel as part of the NRC accident studies. Molten Zircaloy wets UO_2, which would make direct melting unattractive. Molten Zircaloy also dissolves a portion of the fuel.[27] It has been suggested that wetting would not be a problem if the Zircaloy were dissolved as a lower-melting alloy, such as by

contacting with molten zinc.[28] The Zircaloy can be dissolved in molten zinc if the Zn/Zr ratio is >5.[29] The zinc could then be recovered by distillation. A clean separation of the fuel from the clad would possibly be difficult, but a small transfer of zirconium (zinc assumed to be distilled off) to the ARP process could be tolerated. Fuel dissolved by the zinc would be a significant problem which would require recovery of the fuel values from the Zircaloy residue after distillation of the zinc.

The melting and alloying methods may dissolve more of the fuel than can be tolerated, thus creating a more difficult recovery of fuel values than would be the case for other fuel removal methods which retain the cladding in its original form or do not incorporate a significant quantity of fuel in the modified cladding. The complications of handling molten metals, retorting, and attaining the required fuel recoveries make these options unattractive.

A.1.3 Zirflex Process

The Zirflex process[11,12,30-33] utilizes a boiling solution of ammonium fluoride to dissolve Zircaloy cladding (Fig. 8). Ammonium nitrate is also added to the dissolver solution to inhibit hydrogen formation and to solubilize the tin. Swanson[30] found that the dissolution of Zr in NH_4F-NH_4NO_3 solutions proceeds primarily according to the following equation:

$$Zr + 6NH_4F + 0.5\ NH_4NO_3 \rightarrow (NH_4)_2\ ZrF_6 + 5NH_3 + 1.5\ H_2O\ .$$

A small amount of hydrogen (~0.05 mol H_2/mol Zr) is not scavenged by the nitrate present.

Stainless steel can be used for equipment to contain solutions of boiling NH_4F. This is a clear advantage over the use of hydrofluoric acid solutions for decladding which requires Monel equipment. The same stainless steel dissolver can also be used to dissolve the fuel core in subsequent aqueous reprocessing. After cladding dissolution, the declad solution is withdrawn and then rinsing is carried out on the fuel residue and dissolver vessel to minimize carryover of fluoride into subsequent processing.

Losses of uranium and higher actinides to the declad solution are governed by the solubilities of their fluorides in the zirconium and ammonium fluoride solution. However, their solubilities are quite limited and losses of up to 0.2% of the total U and Pu are

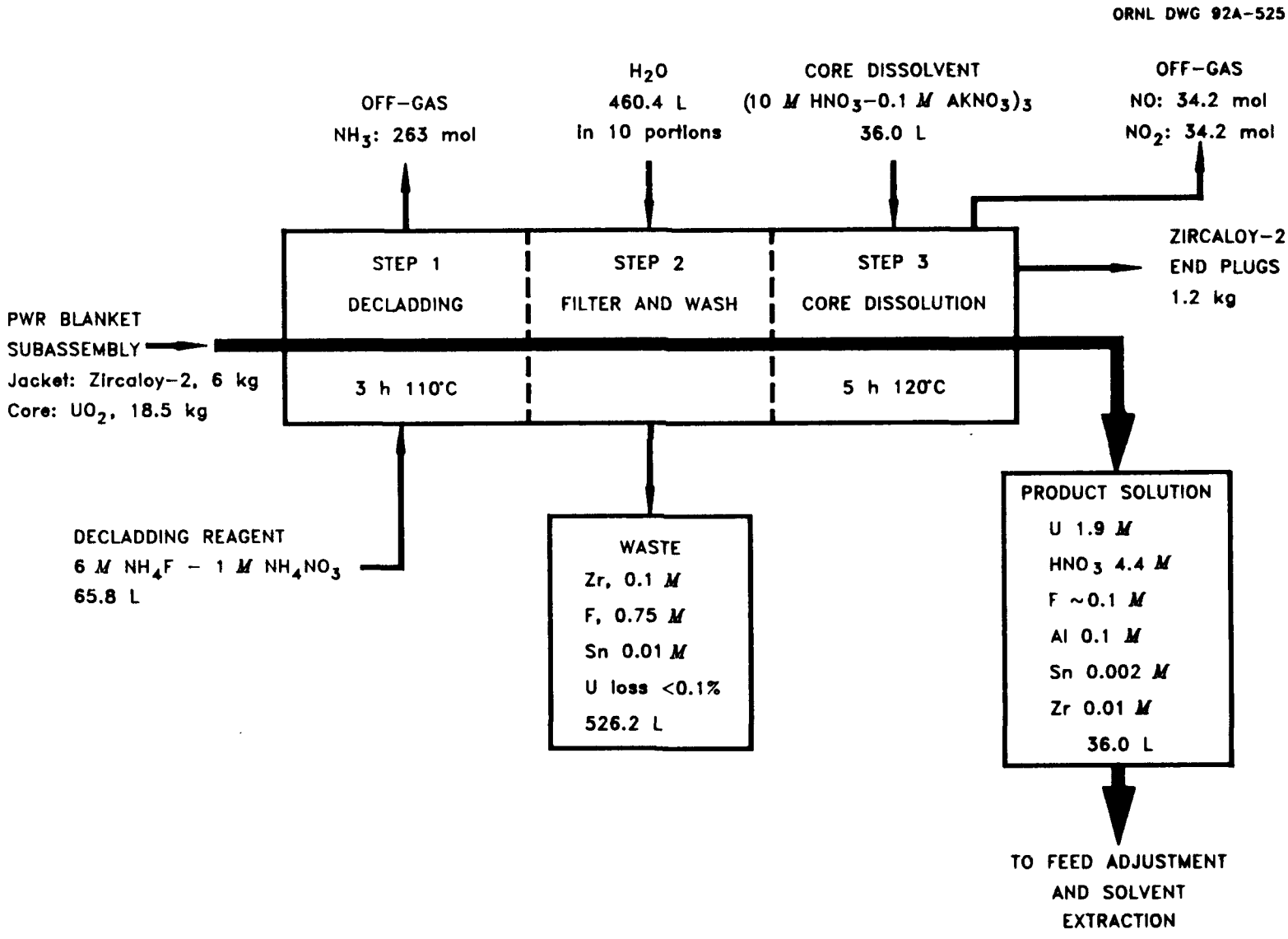

Fig. 8. Zirflex process for decladding and dissolution of PWR blanket fuel.

reported from laboratory and hot cell tests with Zircaloy clad UO_2 pellets.[33] Laboratory results[30,32] indicate that losses might be reduced to ~0.02% with careful control of declad conditions. Losses of Am, Cm, and Np were not determined in these studies. For the present application, prudence dictates that a process for removing actinides from the decladding solution be incorporated into operations to ensure that no TRU waste resulted from the decladding.

The Zirflex process has been used at Hanford to declad the Zircaloy-clad N-reactor fuel. However, it is yet to find application with oxide fuels.

There must be a very good reason to consider an aqueous process as a head-end for a pyroprocess. The Zirflex process does not qualify, in our opinion.

A.1.4 Dissolution in Hydrofluoric Acid

The principal dissolution method used in the recovery of highly enriched zirconium-based fuel makes use of the reactivity of Zr with aqueous hydrofluoric acid.[11,12,30,31] Hydrofluoric acid dissolution has been in use at the Idaho Chemical Processing Plant for several decades.[31]

Laboratory tests of conceptual flowsheets (Fig. 9) with unirradiated fuel have shown that the decladding losses were considerably higher than those in the Zirflex process (0.5% vs 0.02%). Also, radiolytically produced hydrogen peroxide, which promotes Zr dissolution, is likely to make the losses even higher with irradiated fuel. Further, its deployment will require a more expensive material of construction for the declad vessel. Monel is required for HF, whereas stainless steel can be used for ammonium fluoride solutions. Actinides would have to be recovered from the declad solution as is the case with the Zirflex process. Additional disadvantages of HF compared to the NH_4F dissolution is the greater volume of hydrogen produced and its nonreactivity to tin.

This process is not attractive for a head-end for the ARP system.

A.1.5 Nonaqueous Dissolution

Several decladding concepts that are based on the dissolution of cladding in a nonaqueous liquid phase have been investigated for Zircaloy-clad fuels. These concepts include:

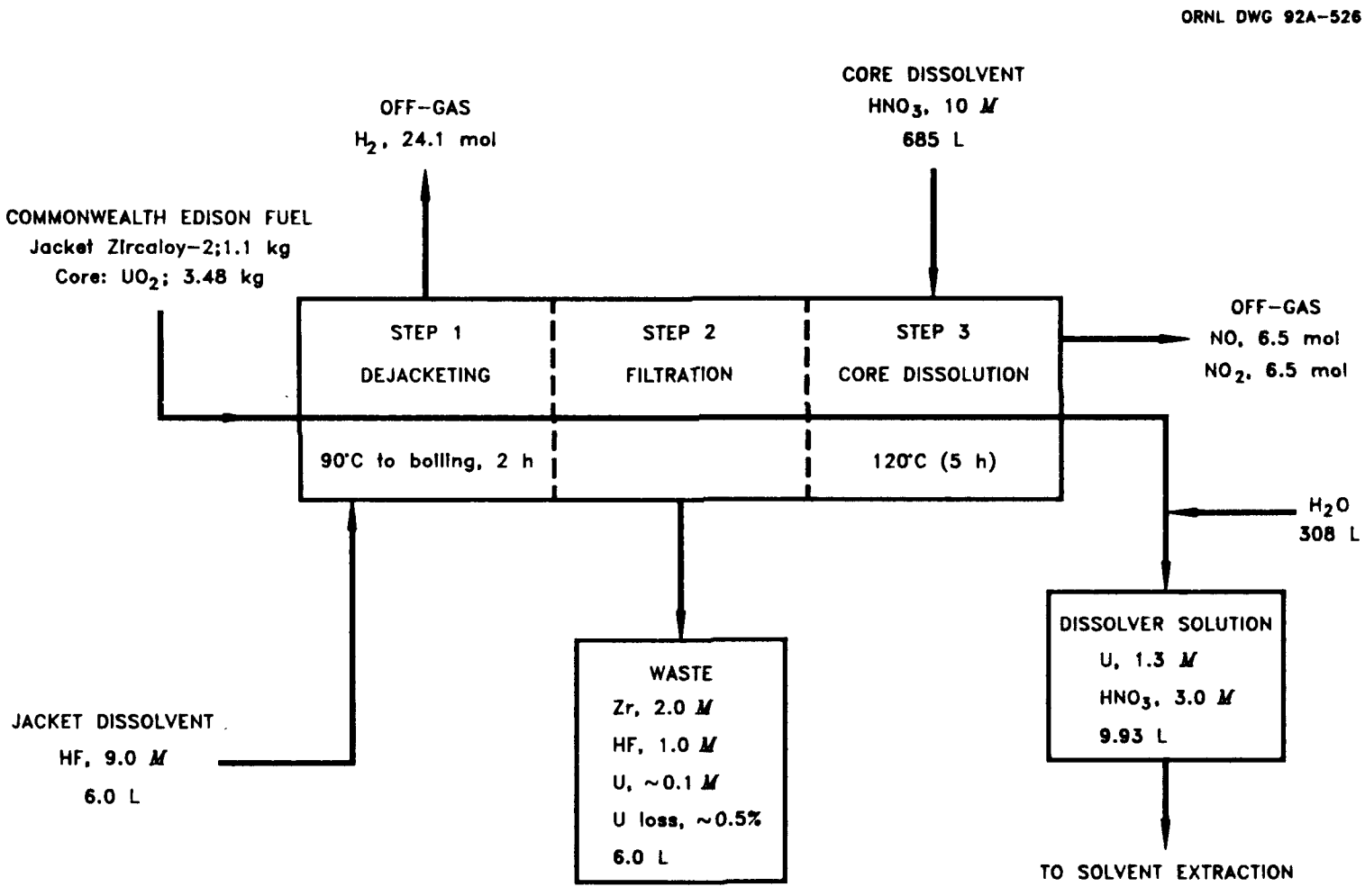

Fig. 9. Hydrofluoric acid process for dejacketing zirconium fuels.

- molten metals
- alcoholic HCl solutions
- liquid-phase hydrochlorination in molten chloride salts
- dissolution in molten lead or zinc chloride
- liquid-phase hydrofluorination in molten fluoride salts
- molten $ZrCl_4$-$POCl_3$ dissolvent

None of these concepts were ever investigated to the extent of application readiness. The liquid-phase hydrochlorination and hydrofluorination in molten salts were investigated to the greatest degree.

None of these processes are attractive for an ARP head-end.

A.1.6 Alcoholic HCl Solutions

The use of anhydrous solutions of HCl in ethanol has been investigated on the laboratory scale and a conceptual flowsheet proposed for Zircaloy-clad, metal-alloy fuels.[11] The maximum permissible dissolution temperature must be maintained at 25°C or below to avoid the formation of water by the reaction

$$HCl + C_2H_5OH \rightarrow C_2H_5Cl + H_2O.$$

Required operation at about 25°C is a serious disadvantage to this process since relatively large heat removal units must be provided to handle the heat of reaction of HCl with zirconium (128 kcal/mol). The high flammability of anhydrous ethanol is a further disadvantage to this process.

Although this process might be chemically feasible, a tremendous developmental effort would be required to fully develop it. It does not appear to have any obvious advantages over other hydrochlorination concepts.

A.1.7 Direct Dissolution in Molten Lead or Zinc Chloride

Zircaloy is dissolved by molten lead[34] or zinc[35] chlorides according to the following reactions:

$$Zr_{(s)} + PbCl_{2(\ell)} \rightarrow ZrCl_{4(g)} + Pb_{(\ell)}, \text{ and}$$

$$Zr_{(s)} + ZnCl_{2(\ell)} \rightarrow ZrCl_{4(g)} + Zn_{(\ell)}.$$

In principle, the metallic lead or zinc generated can be chlorinated and recycled to subsequent dissolutions.

Laboratory tests showed the dissolution of Zircaloy is feasible by this method. Four principal difficulties remain to be solved for plant-scale application: (1) inhibition of reaction by the deposition of Zn or Pb at the Zircaloy surface, (2) the quantitative vaporization of $ZrCl_4$ from $PbCl_2$ or $ZnCl_2$ melts, (3) demonstration of the recycle of Pb or Zn, and (4) determination of appropriate materials of construction. These processes do not appear to offer any advantage over direct hydrochlorination while suffering the disadvantage of more complexity.

A.1.8 Liquid-Phase Hydrofluorination in Molten Fluoride Salts

Zircaloy, Zr-U alloys, and UO_2 are dissolved by bubbling anhydrous, gaseous HF when immersed in a molten fluoride salt.[36] Zirconium and uranium are converted to the soluble tetrafluorides. This dissolution method, which was developed to process Zircaloy-clad metal alloy fuels of U-Zr, utilized the volatility of UF_6 in a subsequent fluorination step to separate U from fission products. Investigations of this process were carried out on a pilot scale at Oak Ridge and Argonne. The chemical flowsheet employed by Oak Ridge is shown in Fig. 10.

The cladding and U-Zr alloy fuel was dissolved in molten $NaF\text{-}ZrF_4$ by hydrofluorination at 600° C:

$$U_{(s)} + 4HF_{(g)} \rightarrow UF_{4(s)} + 2H_{2(g)} \text{ and}$$

$$Zr_{(s)} + 4HF_{(g)} \rightarrow ZrF_{4(s)} + 2H_{2(g)} .$$

H_2 is liberated in the formation of the soluble tetrafluoride salts. In a second step, the UF_4 is converted to UF_6 by bubbling fluorine through the molten salt solution:

$$UF_{4(s)} + F_{2(g)} \rightarrow UF_{6(g)} .$$

Some fission product volatilization also results from the fluorination, and a sorption-desorption step is carried out on a packed-bed of sodium fluoride to purify the UF_6 prior to its collection by cold trapping. Pilot-scale work at Argonne showed that purification could also be achieved by the distillation of liquid UF_6. The distillation method subsequently found commercial application in supplying purified UF_6 to enrichment plants.

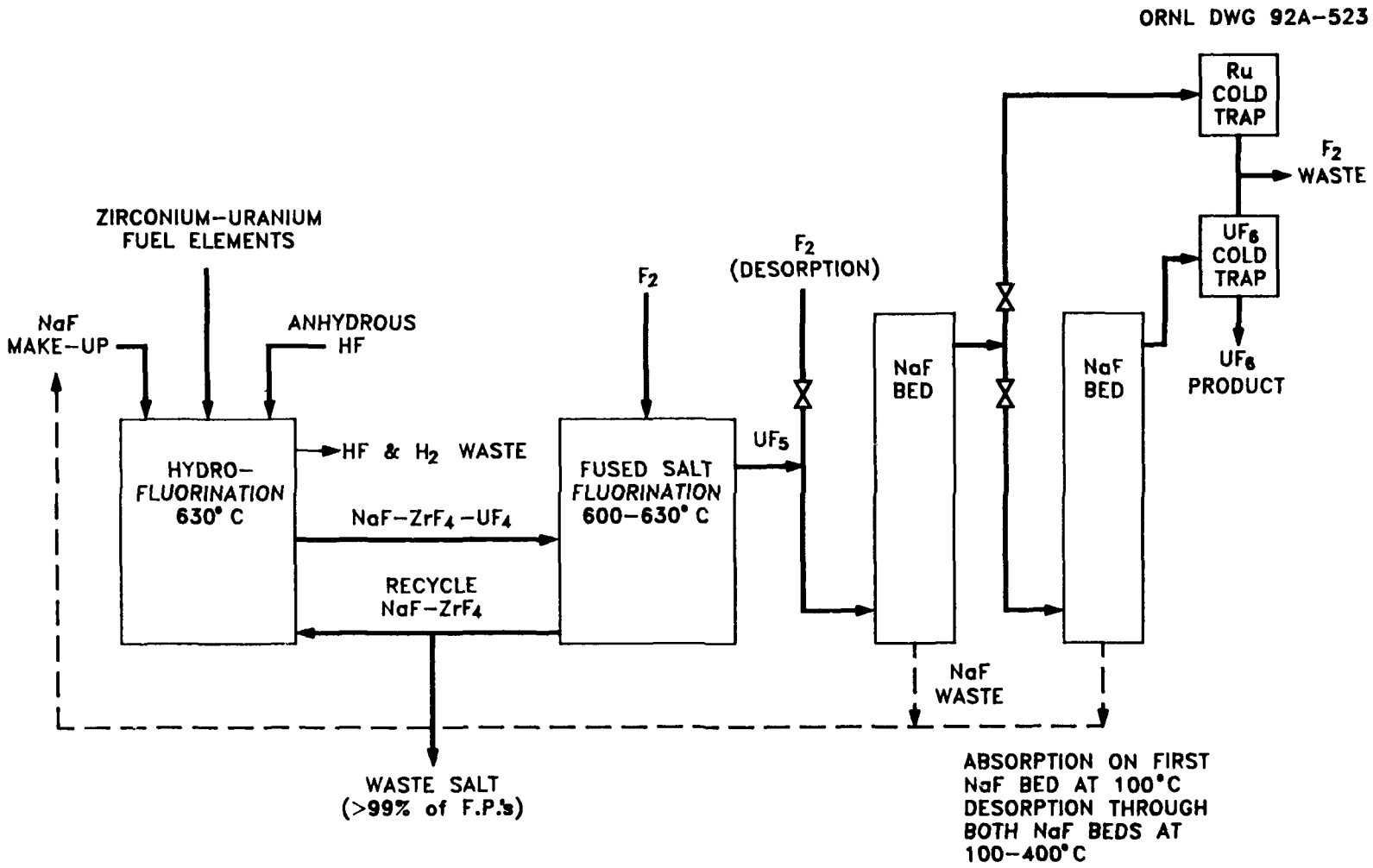

Fig. 10. Fused-salt volatility recovery process for zirconium fuel (ORNL Pilot Plant).

Corrosion rates in the HF dissolution and fluorination operations at the ORNL and ANL pilot plants were very high. No satisfactory material of construction was identified in this early work, although workers believed that operating with a frozen layer of salt on vessel and piping walls would allow acceptable corrosion. The dissolution of UO_2 produces water as a by-product, and the presence of water would likely result in higher corrosion rates than resulted in the previously described anhydrous conditions.

The solution of actinides and fission products in a molten fluoride salt does not match the present ARP flowsheet, which uses a CaF_2-$CaCl_2$ molten salt to effect reduction with calcium metal. Methods would have to be developed for incorporating the fluoride salt mixture into ARP feed. This highly complicated approach has no particular advantages.

A.1.9 Molten $ZrCl_4$-$POCl_3$ Dissolvent

This molten salt system was briefly investigated in the laboratory[11] as a method for dissolution of zirconium alloy fuels. It was also extensively investigated in a separation method for zirconium and hafnium that was based on the relative volatilities of the phosphoryl chloride complexes of zirconium and hafnium tetrachlorides.[38]

Good dissolution rates were obtained in a refluxing molten mixture of $ZrCl_4$-$POCl_3$ at 360°C. The excess $ZrCl_4$ is removed in a second volatilization step of the complex $3ZrCl_4 \cdot 2POCl_3$, which is recycled for the next dissolution along with the necessary makeup $POCl_3$. It is not known to what extent this reagent reacts or partially reacts with UO_2.

The capabilities of this process are largely undemonstrated, and it has many uncertainties. Considerable development work would be required to determine if this process was capable of preparing a satisfactory feed of LWR actinides for the ARP flowsheet. It does not appear to have any advantages over other processes with more promise.

A.1.10 Electrolytic Dissolution

Electrolytic dissolution of Zircaloy in aqueous nitric acid was investigated on the pilot scale at Savannah River.[39] Electrolytic dissolution of Zircaloy in anhydrous molten

salts[40] is also probably feasible; such a process has been proposed by ANL for LWR decladding (see Electrotransport). Aqueous electrolytic processes in nitric acid media disintegrate Zircaloy cladding and also dissolve the UO_2. The UO_2 is dissolved as it becomes exposed to the acid after cladding destruction. The Zircaloy is converted to the oxide that settles as a sludge at the bottom of the electrolytic cell.

In the pilot-scale work at Savannah River, two 170-lb assemblies of unirradiated UO_2 fuel clad with Zircaloy-4 were dissolved. The fuel was contained in an insulated niobium basket that was located between a platinum anode and a niobium cathode. The assemblies dissolved uniformly at an anode density of 2 A/cm^2 at 25 V and a temperature of 90°C. A 64-h period was required to disintegrate the Zircaloy clad and to dissolve the UO_2. About 85% of the Zircaloy was converted to oxide which fell to the bottom of the electrolytic cell. The oxide sludge was allowed to collect in the electrolytic dissolver and at the end of the run was rinsed with dilute acid to remove any uranium. The sludge was then jetted for removal.

In order to make feed for the ARP processing, the dissolved fuel would be converted to dry oxide or carried through aqueous fuel reprocessing. An aqueous electrolytic process would therefore represent no advantage over the standard chop-leach process. Conversion of the Zircaloy to a sludge is a disadvantage over leaving it as hulls for waste disposal.

A.1.11 Oxidation Disintegration

The methods are either based on destruction of the cladding by causing its reaction to oxide, after which it falls away, or on disintegration of the UO_2 core pellets by oxidation after the cladding has been cut into segments to expose the UO_2 core. Massive pieces of Zircaloy, such as tubing segments, are very resistant to oxidation unless the oxidation is catalyzed. Tubing segments cannot be oxidized even at 1600°C with a gas-oxygen torch.[35]

Nitrogen-catalyzed oxidization in steam-oxygen (Thermox process). A decladding process based on the selective oxidization of Zircaloy to ZrO_2 (Thermox) was developed in Sweden and was studied on a wide engineering scale.[14] The Zircaloy is initially oxidized at 825°C in a mixture of oxygen and water vapor, using nitrogen as a catalyst. Negligible attack of UO_2 is said to occur under these conditions, and the UO_2 is oxidized in air to

U_3O_8 at 550°C in a second step. Thermox was originally developed as a head-end treatment for the aqueous processing of Zircaloy-clad UO_2 fuels, and the U_3O_8 was subsequently dissolved in nitric acid and the insoluble residue of ZrO_2 separated. The dissolution was carried out in the same stainless steel vessel that was used for the initial cladding and core disintegration. The undissolved ZrO_2 was described as a gravel-like solid which can be used as a filter bed to clarify the solution of dissolved fuel.

It is unlikely that the Thermox process can be modified to interface with the ARP flowsheet. After the initial oxidation of Zircaloy, a bulk separation of pellets and the ZrO_2 could perhaps be made and the UO_2 pellets plus some residual ZrO_2 could be fed directly to the molten salt-oxide reduction feed preparation process.

Hydrogen fluoride-catalyzed oxidation. Zircaloy or stainless cladding is rapidly and completely converted to oxides by exposure to gas mixtures containing 30 to 65% HF and 70 to 35% O_2 for 1 to 4 h at 500 to 625°C.[35,40] Two tests on Zircaloy oxidation have been conducted with unirradiated fuel rods on the experimental engineering scale at ORNL.[40] The fuel rods were immersed in a fluidized bed of alumina particles (-48 +100 mesh). Oxidization of the Zircaloy was accomplished at 550°C by passage of 40% HF—60% O_2 for 1 h followed by 20% HF—80% O_2 for 2 h. The cladding residue consisted mainly of ZrO_2 fines. However, there were some massive ZrO_2 shards present. Uranium reaction products include U_3O_8, UO_2F_2, and UF_4 from the partial reaction of UO_2 with HF-O_2.

Work with irradiated fuels is yet to be performed. Thus, information is lacking on the fate and deposition of radionuclides, particularly the volatile radionuclides of Cs, Ru, and H.

High-temperature integrated oxidation-disintegrated followed by dissolution. A recent patent[41] describes a proposed treatment in which the LWR fuel pins are oxidized at a high temperature inside a temperature and nitric acid-resistant container followed by nitric acid leaching of the residue. The container serves as the dissolver vessel and the final container for all waste materials.

A.2 SECONDARY FUEL REMOVAL PROCESSES THAT WERE NOT CONSIDERED

A.2.1 Electrolytic Etch (Electropolishing)

Electropolishing is a method used for decontaminating surfaces when the contamination is intimately associated with the material to be cleaned. As we understand the technique, it is applicable only to surfaces where the counterelectrode can be maintained uniformly spaced from the surface to be cleaned. For instance, it can be used easily for flat surfaces with a flat counterelectrode. It can also be used for corners with a counterelectrode shaped to match the corner, and so forth. It would not be suitable for a bed of sheared fuel. However, it could be used for cleaning the inside of a long straight tube such as would result from the roller-straightening treatment of fuel pin. The normal configuration of the electropolishing cell for a flat surface has a counterelectrode which is a stainless steel wire mesh with a porous nonconducting material fastened to its surface. The nonconducting material can be, for instance, a nylon mesh. This array has a soft gasket around the outside, which can be sealed against the flat surface to be cleaned. After sealing the gasket to the contaminated surface, a solution is pumped into the cell and the current (dc) applied. The solution can be either water or a very dilute solution; phosphoric acid is often used. A very thin layer of material is dissolved from the contaminated surface giving a very good decontamination. The solution is then pumped off and the surface rinsed.[42]

For electropolishing the inside of a fuel pin, it appears that a wire counter-electrode with a porous coating to keep the electrode centered in the tube could be used. The solution could be pumped through the tube, giving a very good decontamination. It would be desirable to use plain water as the solution to simplify recovery of the dissolved material. The recovered material would be calcined and sent to the ARP process. This process should be tested with Zircaloy with a substantial oxide layer to be sure the operation is as expected.

The mechanical problems in obtaining a good electrode configuration with the inside of the cladding appear to be very difficult, even with the best case of long segments of cladding. It is unlikely that all oxide deposits will be adequately attacked with a simple

electrode configuration. Unless reevaluation shows this is not a problem, the method should not be considered.

A.2.2 Fuel Removal by Agitated or Ultrasonic Bath

A very good paper comparing ultrasonic cleaning with bath agitation for removing adherent dust was located.[43] The paper compares the cleaning abilities of agitated water baths with ultrasonic baths using either water, water solutions of SDG3 (an established decontaminating reagent; reference requested), or Freon® solutions. The recommendations of the study are repeated here.

"SDG3 is considered a good reagent for general purpose cleaning using scrubbing, immersion, or spraying techniques. It has been demonstrated to remove over 99% of particulate contamination in this study when used in a heated and agitated immersion bath, but **there is little evidence to show that ultrasonic cleaning increases its effectiveness as a decontamination reagent** (our emphasis).

For special purposes, fluorocarbon solvents will give satisfactory results when used in an ultrasonic system. Areas of possible use include:

a. Electrical, some plastic or delicate components.
b. Product contaminated materials can be decontaminated in a water-free system, and this overcomes the problem associated with criticality of fissionable species.
c. The solvents have viscosity and wetting properties which make them suitable for cleaning assembled, small, multipart components such as "manipulator jaws."

For the ANL purposes, it may be that an ultrasonic bath using a Freon could be preferred for the absence of water and because it would readily penetrate small gaps. On the other hand, the complexity of the ultrasonic system would be greater than that of a simple agitated bath followed by filtration, washing, and drying of the separated fuel particles.

The bath systems are probably not capable of removing the last traces of fuel that may be chemically bonded to the zirconium oxide layer. It also requires the use of solutions that are undesirable in the ARP system. Molten salt wash/leach techniques appear to be better choices.

ORNL/TM-12104
Dist. Category UC-526

INTERNAL DISTRIBUTION

1. J. M. Begovich
2. J. T. Bell
3-7. W. D. Bond
8. E. D. Collins
9. A. G. Croff
10. J. G. Delene
11. C. W. Forsberg
12. W. J. Fulkerson
13. R. K. Genung
14. R. L. Heestand
15. J. R. Hightower
16. F. J. Homan
17. C. R. Hudson
18. S. B. Ludwig
19-23. J. C. Mailen
24-28. G. E. Michaels
29. J. P. Nichols
30. M. Petek
31. W. J. Reich
32. S. L. Schrock
33-34. P. F. Spelt
35. R. D. Spence
36. J. O. Steigler
37. M. G. Stewart
38. L. M. Toth
39. T. D. Welch
40. J. D. White
41. A. J. Zucker
42. Central Research Library
43. ORNL—Y-12 Technical Library Document Reference Section
44-45. Laboratory Records
46. Laboratory Records, ORNL RC
47. ORNL Patent Section

EXTERNAL DISTRIBUTION

48. Office of Assistant Manager for Energy Research and Development, DOE-OR, P.O. Box 2001, Oak Ridge, TN 37831-8600
49-53. Frank Goldner, NE-45, U.S. DOE, 19901 Germantown, MD 20874
54. S. Rosen, NE-45, U.S. DOE, 19901 Germantown, MD 20874
55. C. Webber, NE-45, U.S. DOE, 19901 Germantown, MD 20874
56. J. Williams, NE-45, U.S. DOE, 19901 Germantown, MD 20874
57. J. E. Battles, Argonne National Laboratory, 9700 South Cass Avenue, Argonne, IL 60439
58. Y. Chang, Argonne National Laboratory, 9700 South Cass Avenue, Argonne, IL 60439
59. J. J. Laidler, Argonne National Laboratory, 9700 South Cass Avenue, Argonne, IL 60439
60. C. McPheeters, Argonne National Laboratory, 9700 South Cass Avenue, Argonne, IL 60439
61. R. D. Pierce, Argonne National Laboratory, 9700 South Cass Avenue, Argonne, IL 60439
62-66. M. Vest, Argonne National Laboratory, 9700 South Cass Avenue, Argonne, IL 60439

67. I. Taylor, General Electric Company, 6835 Via Del Oro, P.O. Box 53095, San Jose, CA 95153-5354
68. M. Thompson, General Electric Company, 6835 Via Del Oro, P.O. Box 53095, San Jose, CA 95153-5354
69. L. F. Blankner, DOE-OR, P.O. Box 2001, Oak Ridge, TN 37831-8600
70. R. G. Wymer, 188-A Outer Drive, Oak Ridge, TN 37831

71-72. Office of Scientific and Technical Information, P.O. Box 2001, Oak Ridge, TN 37831

73-143. Given distribution as shown in Category UC-526