WL-TR-93-2036

AD-A268 257

HIGH TEMPERATURE HYDRAULIC SEALS

DTIC
ELECTE
AUG 12 1993
S D

K. R. Williams
McDonnell Douglas Aerospace
Transport Aircraft
3855 Lakewood Blvd
Long Beach, CA 90846-0001

May 1993

Final Report for Period October 1987 - November 1992

Approved for public release; distribution is unlimited

93-18655

154 pgs

AERO PROPULSION & POWER DIRECTORATE
WRIGHT LABORATORY
AIR FORCE MATERIEL COMMAND
WRIGHT-PATTERSON AIR FORCE BASE, OH 45433-7650

93

NOTICE

When Government drawings, specifications, or other data are used for any purpose other than in connection with a definitely Government-related procurement, the United States Government incurs no responsibility or any obligation whatsoever. The fact that the government may have formulated or in any way supplied the said drawings, specifications, or other data, is not to be regarded by implication, or otherwise in any manner construed, as licensing the holder, or any other person or corporation; or as conveying any rights or permission to manufacture, use, or sell any patented invention that may in any way be related thereto.

This report is releasable to the National Technical Information Service (NTIS). At NTIS, it will be available to the general public, including foreign nations.

This technical report has been reviewed and is approved for publication.

Edward B. Durkin

EDWARD B. DURKIN
Project Engineer
Electromechanical Technology

Phillip G. Colegrove

PHILLIP G. COLEGROVE
Section Chief, Electromechanical Technology
Power Technology Branch

Michael D. Braydich

MICHAEL D. BRAYDICH, Lt Col, USAF
Deputy Director
Aerospace Power Division
Aero Propulsion and Power Directorate

If your address has changed, if you wish to be removed from our mailing list, or if the addressee is no longer employed by your organization please notify WL/POOS, WPAFB, OH 45433-7251 to help us maintain a current mailing list.

Copies of this report should not be returned unless return is required by security considerations, contractual obligations, or notice on a specific document.

REPORT DOCUMENTATION PAGE

Form Approved
OMB No. 0704-0188

Public reporting burden for this collection of information is estimated to average 1 hour per response, including the time for reviewing instructions, searching existing data sources, gathering and maintaining the data needed, and completing and reviewing the collection of information. Send comments regarding this burden estimate or any other aspect of this collection of information, including suggestions for reducing this burden, to Washington Headquarters Services, Directorate for Information Operations and Reports, 1215 Jefferson Davis Highway, Suite 1204, Arlington, VA 22202-4302, and to the Office of Management and Budget, Paperwork Reduction Project (0704-0188), Washington, DC 20503.

1. AGENCY USE ONLY *(Leave blank)*

2. REPORT DATE
May 1993

3. REPORT TYPE AND DATES COVERED
Final Report, Oct 87 - Nov 92

4. TITLE AND SUBTITLE
High Temperature Hydraulic Seals

5. FUNDING NUMBERS
C-F33615-87-C-2710
PE-62203
PR-3145
TA-30
WU-45

6. AUTHOR(S)
K. R. Williams

7. PERFORMING ORGANIZATION NAME(S) AND ADDRESS(ES)
McDonnell Douglas Aerospace
Transport Aircraft
3855 Lakewood Blvd.
Long Beach, CA 90846-001

8. PERFORMING ORGANIZATION REPORT NUMBER
MDC 92K0395

9. SPONSORING/MONITORING AGENCY NAME(S) AND ADDRESS(ES)
Aero Propulsion & Power Directorate
Wright Laboratory
Air Force Materiel Command
Wright Patterson AFB, OH 45433-7650
Attention: Edward B. Durkin, Phone: 513/255-6241

10. SPONSORING/MONITORING AGENCY REPORT NUMBER
WL-TR-93-2036

11. SUPPLEMENTARY NOTES

12a. DISTRIBUTION/AVAILABILITY STATEMENT
Approved for public release;
Distribution is unlimited

12b. DISTRIBUTION CODE

13. ABSTRACT *(Maximum 200 words)*

This program investigated and evaluated high-temperature hydraulic sealing technology, including seals, fluids and actuator materials. Test limits for fluid pressure and temperature were 8000 psi and 700°F respectively. The original plan to investigate CTFE fluid at 350°F as well as other fluids at higher temperatures was reduced in scope to include only the higher temperature investigation. Seals were obtained from 11 manufacturers. Design requirements including materials, dimensions, clearances and tolerances were established and test modules were constructed from the detail designs which were produced. Nine piston seals and one rod seal were tested at temperatures ranging from -65 to +600°F and pressures to 6000 psi. Fluid performance under these conditions was evaluated. Details of this activity and results of the effort are summarized in this report.

14. SUBJECT TERMS
High Temperature Hydraulic seals; Surface Finish; Seal Test Module; Cylinder Material; Rod Material; Piston Seal; Rod Seal; High Temperature Fluid

15. NUMBER OF PAGES
155

16. PRICE CODE

17. SECURITY CLASSIFICATION OF REPORT	18. SECURITY CLASSIFICATION OF THIS PAGE	19. SECURITY CLASSIFICATION OF ABSTRACT	20. LIMITATION OF ABSTRACT
Unclassified	Unclassified	Unclassified	Unclassified

TABLE OF CONTENTS

Page

1 INTRODUCTION AND SUMMARY 1

1.1 INTRODUCTION 1

1.1.1 Background 2
1.1.2 Program Objectives 4

1.2 PROGRAM SUMMARY 6
1.3 DOCUMENTATION AND SCHEDULE 7

2 PRELIMINARY DESIGN REQUIREMENTS 9

2.1 SEAL SELECTION 9

2.1.1 Vendor Survey and Response 9
2.1.2 Analysis of Proposed Seals 11

2.1.2.1 Radial Spring Energized Seals 12
2.1.2.2 Split Sealing Rings 23
2.1.2.3 Axially Spring Energized Seals 24

2.1.3 Performance Criteria 25

2.2 FLUID SELECTION 27
2.3 TEST METHODOLOGY 29

2.3.1 Application of Temperature and Pressure 29
2.3.2 Cycling Stroke and Rate 30
2.3.3 General Arrangement 31
2.3.4 Instrumentation Requirements 32
2.3.5 Documentation 33

2.4 HARDWARE DESIGN 34

2.4.1 Test Fixture 34
2.4.2 Seal Test Modules 37

2.4.2.1 Piston Seal Module 37
2.4.2.2 Rod Seal Module 43

3 TEST RESULTS..... 45
3.1 PISTON SEAL TESTS 45

3.1.1 Piston Seal Test 1 45

TABLE OF CONTENTS (Continued)

Page

3.1.1.1 Seals Tested and Leak Performance 45
3.1.1.2 Posttest Observations and Conditions 48

3.1.2 Piston Seal Test 2..... 51

3.1.2.1 Seals Tested and Leak Performance 51
3.1.2.2 Posttest Observations and Conditions 55

3.1.3 Piston Seal Test 3A 59

3.1.3.1 Seals Tested and Leak Performance 59
3.1.3.2 Posttest Observations and Conditions 61

3.1.4 Piston Seal Test 3B 61

3.1.4.1 Seals Tested and Leak Performance 61
3.1.4.2 Posttest Observations and Conditions 62

3.1.5 Piston Seal Test 4 63

3.1.5.1 Seals Tested and Leak Performance 63
3.1.5.2 Posttest Observations and Conditions 63

3.1.6 Piston Seal Test 5 64

3.1.6.1 Seals Tested and Leak Performance 64
3.1.6.2 Posttest Observations and Conditions 65

3.1.7 Piston Seal Test 6 65

3.1.7.1 Seals Tested and Leak Performance 65
3.1.7.2 Posttest Observations and Conditions 66

3.1.8 Piston Seal Test 7 67

3.1.8.1 Seals Tested and Leak Performance 67
3.1.8.2 Posttest Observations and Conditions 67

3.1.9 Piston Seal Test 8 68

3.1.9.1 Seals Tested and Leak Performance 68
3.1.9.2 Posttest Observations and Conditions 70

3.1.10 Piston Seal Test 9 70

3.1.10.1 Seals Tested and Leak Performance 70
3.1.10.2 Posttest Observations and Conditions..... 70

TABLE OF CONTENTS (Continued)

Page

3.2 ROD SEAL TEST 71

3.2.1 Seals Tested and Leak Performance 71

4 STATIC SEAL PERFORMANCE 73

4.1 HARRISON K SEALS 73
4.2 ROSAN RF5000 SERIES PORT ADAPTER 73

5 PREPARATION OF SEALING SURFACES 74
6 CONCLUSIONS AND RECOMMENDATIONS 75

6.1 CONCLUSIONS 75
6.2 RECOMMENDATIONS 76

REFERENCES..... 77

APPENDIX A PROPOSED SEAL DESIGNS..... 78

APPENDIX B CALCULATION OF SPRING FORCE AND CONTACT STRESS..... 83

APPENDIX C PROPERTIES OF MIL-H-27601 HYDRAULIC FLUID... 87

APPENDIX D PRE-SCREEN TEST PLAN..... 89

APPENDIX E ANALYSIS OF TEST STROKING MOTION..... 97

APPENDIX F DESIGN OF PISTON SEAL TEST BARREL AND ANALYSIS FOR PRESSURE EXPANSION.....100

APPENDIX G ILLUSTRATION OF SURFACE FINISH MEASUREMENT AND PARAMETERS.....103

APPENDIX H GENERAL SUMMARY OF PISTON SEAL TEST RESULTS.....106

APPENDIX I CRITICAL MEASUREMENTS OF TEST SPECIMENS AND HARDWARE.....112

APPENDIX J INSTRUCTIONS FOR PROVIDING SURFACE FINISH ON TEST CYLINDER BARRELS.....135

APPENDIX K TECHNIQUES USED TO PREPARE ROD SURFACES.....137

LIST OF FIGURES

Page

1 Typical State-of-the-Art Dynamic Rod Seal..... 2

2 Project Schedule - High Temperature Seal Project..... 8

3 Dynamic Seal Installation Showing both Static and Dynamic Sealing Areas..... 12

4 Interaction of Sealing Parameters..... 14

5 Flow Conductance Related to Contact Stress..... 17

6 Contact Geometry of Spring Energized Seal..... 19

7 Hydraulic Forces on Two-Piece Seal Ring..... 23

8 General Test Arrangement..... 31

9 Seal Test Fixture..... 34

10 Prescreen Test Fixture..... 35

11 Prescreen Test Fixture..... 36

12 Close-Up View of Thermal Enclosure..... 36

13 Original Piston Seal Test Module..... 39

14 Revised Piston Seal Test Module..... 39

15 Cross-Section View of Rod Seal Test Module..... 43

16 Appearance of Advanced Products Seal Following First Prescreen Test..... 48

17 Appearance of Advantec Seal Following First Prescreen Test..... 49

18 Advantec Seal Following First Prescreen Test Showing the High Pressure Side and the Mating PBI Backup Ring..... 49

19 Krueger Delta Seal Following First Prescreen Test..... 50

LIST OF FIGURES (Continued)

20 Appearance of Advantec Leak Catch Seals - First Sequence - Second Prescreen Test..... 51

21 K Seals Used as Static Seals in First and Second Presscreen Test..... 52

22 Prescreen Test Module Piston Subassembly Following Second Prescreen Test..... 55

23 Local Reduction in Krueger Delta Seal Cross Section Causing Heavy Leakage..... 56

24 Appearance of Advantec Primary Test Seal Upon Removal After Second Prescreen Test..... 57

25 Advantec Seal Used in the Secondary Position During the Second Sequence of the Second Prescreen Test..... 57

26 Appearance of the Carbon Bearings Removed from the Test Module Between the First and Second Sequences of the Second Prescreen Tests..... 58

27 Appearance of Cook Airtomic Seal Following Test..... 64

28 Shamban S37905 Piston Ring Assembly..... 66

29 Furon Split Piston Ring Assembly Part No. 60706-01048..... 67

30 Advantec Secondary Seals Following use in Test Number 8..... 68

31 Shamban S37573 Seal Assembly..... 71

D-1 Seaton Wilson Air-ometer..... 91

Accession For
NTIS GRA&I ☑
DTIC TAB ☐
Unannounced ☐
Justification
By
Distribution/
Availability Codes
Dist | Avail and/or Special
A-1

DTIC QUALITY INSPECTED 3

LIST OF TABLES

Page

1 Seal Types and Description..... 11

2 Seal Performance Parameters..... 13

3 Seal Leakage Performance for First Prescreen Test..... 47

4 Leakage Results During Second Prescreen Test..... 54

5 Leakage Performance for Test 3A..... 60

6 Leakage from Seals During 3B Cold Test..... 62

7 Leakage Summary for Test Number Eight-Krueger Delta Seals..... 69

FOREWORD

This report was prepared by the McDonnell Douglas Aerospace Company, Transport Aircraft Division (MD-TA) for the United States Air Force under contract F33615-87-C-2710. The work was administered under the direction of the Aero Propulsion and Power Directorate, Wright Laboratory, Air Force Materiel Command, Wright-Patterson AFB, Ohio. The Air Force program Manager was Edward Durkin, and the MDA-TA Project Manager was Kenneth Williams.

Technical assistance and test fluid were supplied/without charge by Mr. C. E. Snyder and Ms. L. Gschwender of the materials Laboratory (WL/MLBT), Bray Products Division of Castrol Inc., Monsanto Co., and General Electric Company.
This report documents the total program effort which was performed from 2 October 1987 to 31 August 1992.

LIST OF ABBREVIATIONS AND ACRONYMS

ANSI	American National Standards Institute
ASME	American Society of Mechanical Engineeers
ATP	Authorization to Proceed
C	Centigrade
cc	Cubic Centimeters
CDRL	Contractor Data Requirements List
CTFE	Chlorotrifluoroethylene (Experimental Nonflammable Halocarbon-type Hydraulic Fluid)
EHA	Electro Hydrostatic Actuator
EMA	Electro Mechanical Actuator
F	Fahrenheit
Hz	Hertz
IHPTET	Integrated High Performance Turbine Engine Technology
ksi	Kilo Pound per Square Inch
MDA	McDonnell Douglas Aerospace
mL	Milliliters
Mo	Molybdenum
PBI	Polybenzimidazole
Pc	Peak Count
PH	Precipitation Hardening
psi	Pounds per Square Inch
PTFE	Polytetrafluoroethylene
Ra	Arithmetic Roughness Average
RAMTIPS	Reliability and Maintainability Technology Insertion Programs

LIST OF ABBREVIATIONS AND ACRONYMS (Continued)

Rc	Rockwell Hardness "c"
rms	Root Mean Square
RPM	Revolutions Per Minute
SR-71	Supersonic Research Aircraft
V-22	Experimental Vertical/Short Takeoff Aircraft
WL	Wright Laboratory
WL/MLBT	Wright Lab/Materials Directorate (Nonstructural Materials Branch)
XB-70	Experimental Supersonic Bomber Aircraft

1. INTRODUCTION AND SUMMARY

1.1 INTRODUCTION

Present air vehicles depend heavily on hydraulic power to accomplish high performance actuation tasks such as primary flight control actuation. While the present trend in air vehicle secondary power systems is toward the "More Electric Airplane" technology, (power-by-wire), it is clear that highly reliable aircraft hydraulic system technology will be required well into the next century. There are at least two reasons for this:

(1) The present initiatives for more electric aircraft (such as the Air Force RAMTIPS program) are not scheduled to produce usable, mature technology until after 1996.

(2) Some of the flight control units presently being developed for the power-by-wire concepts are hydraulically driven. Examples are electro hydrostatic actuators (EHA) and electro servo pump actuators (ESPA).

The hydraulic seal is one of the key basic components in any hydraulic system. Without its proper operation, the working fluid will be lost from the system and total system function will be lost. This is a critical issue when considering the EHA and ESPA power-by-wire units. These units will contain relatively small quantities of fluid and are likely to be located in remote locations where they will be expected to perform for extended periods of time between servicing.

For future air vehicles, the trend is toward higher operating temperatures and pressures in the hydraulic systems which will o conserve space, the engine mounted hydraulic system components are being located in the higher temperature core compartments, and even remotely located hydraulic equipment (such as the EHA and ESPA) will be subjected to higher temperature operating environments on sustained supersonic cruise aircraft.

Because studies have shown that higher system operating pressure results in lighter, more compact hydraulic systems, future aircraft will have higher system operating pressures. Past experience alsoating pressures. Past experience also showed that hydraulic system reliability tends to decrease with increasing temperature.

In order to ensure the reliability, maintainability and supportability goals set for new generation aircraft, it is absolutely essential that long-life high-temperature, high-pressure hydraulic seals be developed for use in these aircraft.

1.1.1 Background

Aircraft hydraulic system operating pressure has increased from approximately 1500 psi to 3000 psi (and in some cases to 5000 psi) during the preceding 50 years.

As the system operating pressure has increased, the sealing technology has changed to yield improved seals. Early hydraulic seals for linear actuator application consisted of axially loaded "chevron" V-seals, and later radially compressed elastomeric O-rings. The O-rings were improved by the addition of (1) plastic backup rings to prevent extrusion, and (2) capping elements to reduce friction and wear. Figure 1 illustrates a typical seal configuration used in present hydraulic systems. These hydraulic systems are described by MIL-H-5440 and are limited to 275°F for a type II system. The seal failure modes, though not common, could include blowout due to extrusion through the downstream clearance.

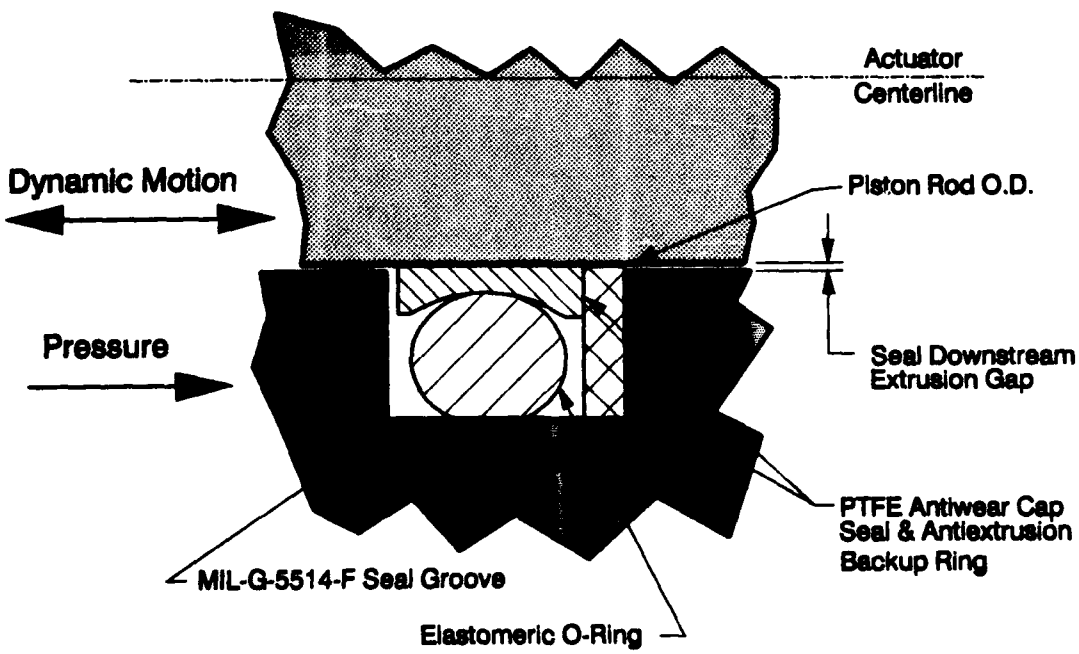

FIGURE 1 - TYPICAL STATE-OF-THE-ART DYNAMIC ROD SEAL

The most common failure is gradual increase in seal leakage due to wear of the seal dynamic contact surface. As system operating temperatures increase, a failure mode termed "compression set" is more likely to occur. This means that all elastomers to some degree tend to thermally degrade and harden or "bake" into their compressed shape. This tends to prevent the seal from elastically responding to a radial change in the piston rod position and thereby allow leakage.

For the most part, however, these present sealing systems, when used with hardware designed to accepted standards and under normal temperature and pressure conditions, will perform satisfactorily for many thousands of hours.

During the 1960s and 1970s, two advanced research projects (SR-71 and XB-70 programs) produced vehicles with hydraulic system environmental temperatures exceeding 500°F. It was recognized that elastomers would not survive in 500°F temperature and 3000 psi hydraulic system, and the available engineering polymers would be marginal in performance under similiar conditions. Because of this need, high-temperature seal and fluid development programs were initiated. The product of these efforts was several all metal seal designs (and some polyimide plastic seal designs) which were very advanced for their time and which met the needs for the (experimental aircraft) application. These metallic seals, however, were very expensive and in some cases provided short wear life and poor reliability. These seals would not meet the present and future reliability, maintainability and supportability goals for operational aircraft.

Improvements have been made in seals and sealing materials, but it is unlikely that any present elastomers would meet the specified requirements for the present high temperature (above 500°F) hydraulic systems. Therefore, the requirements for this contract were to investigate seal designs which do not include elastomeric materials.

1.1.2 Program Objectives

The objective of the High Temperature Hydraulic Seals research program was to investigate, evaluate and report on high-temperature hydraulic sealing technology, including closely associated technology elements such as high-temperature fluids and hydraulic actuator materials of construction. The targeted fluid temperature was 700°F maximum and the pressure was 8000 psi maximum. The program was originally designed to be executed in two tasks; the first to explore effects of temperatures up to 350°F using CTFE fluid, and the second to investigate higher temperatures with other fluids.

The scope of work was adjusted early in the program to include only the high temperature task (task 2) which was originally intended to consist of five phases.

The first two phases were to define requirements and to make preliminary selection of test candidates. The subsequent three phases were for the purposes of designing and fabricating the test hardware and conducting the evaluation testing. During the course of the program, the funding was interrupted for approximately 1 1/2 years, and subsequently the program was reduced in scope to authorize only the first phase of the task. The prescreen seal tests in the first phase, however, did allow collection of some preliminary seal performance data. These test results are discussed in section 3.

A general summary of the items achieved include:

A. Industry survey and solicitation of 17 seal manufacturers to participate in this program.

B. Positive response and proposed seal designs from 11 of the 17 seal manufacturers

C. Preliminary design requirements for the test module (actuator) were determined. These requirements included:

- Type of materials for cylinder barrel, rod and piston, and bearings was selected.

- The dimensions, clearances, tolerances and surface finishes were established for the test module assembly.

- Side loading condition was established.

D. Prescreen test procedures were established.

E. Prescreen test set-up was designed and constructed, including detail design of seal test modules.

F. Performance requirements were established for test seals and then communicated to the seal suppliers.

G. Seal samples were provided and testing accomplished for a total of nine piston seal tests and one rod seal test. Test temperatures reached 600°F and test pressures reached 6000 psi. Cold temperature leakage tests were conducted at -65°F.

H. Two types of static seals were evaluated by test.

I. High temperature hydraulic fluid was evaluated.

The details of the above activity and the results of the effort are summarized in the balance of this report.

1.2 Program Summary

The technical activity for this program including the report was divided into five phases, covering 39 months.

Although Phases 2 through 5 were eliminated from the program, they are included here to show the original intent of the program. They also provide a basis for assessment of the work items accomplished during Phase 1, which achieved some of the work planned in the deleted phases.

Phase 1 - Preliminary Design Requirements

During Phase 1, an industry survey of vendors for available seal types and solicitation for candidate test seals were accomplished.

Analyses of seal types and function were accomplished and performance criteria for seals was established. Prescreen test methodology was established and prescreen test hardware was designed.

Prescreen testing of selected candidate seals was accomplished.

Phase 2 - Screening test procedures (Not Accomplished)

The methods for conducting screening tests and the criteria for evaluating seal and material performance were to be established.

Phase 3 -Design and Fabrication of Test System (Not Accomplished)

The detail design of the actuators used to test candidate seals was to be accomplished and the hardware fabricated. The test arrangement, including fluid and electrical schematics was to be defined, detailed and assembled in preparation for the evaluation tests.

Phase 4 - Screening Tests (Not Accomplished)

The selected candidates seals were to be tested during this phase. The intent was to screen out poor performing candidates, thereby reducing the number of seals to be tested during the subsequent endurance tests.

Phase 5 - Endurance Tests (Not Accomplished)

The more promising candidates selected from the previous screen tests were to be subjected to longer term more rigorous tests to define limiting performance for application of these seals.

1.3 Documentation and Schedule

This final report documents the completion of this program activities, and includes a detailed account of all technical activity during the program. Included are conclusions and recommendations for direction of future efforts. Figure 2 shows the program schedule including tasks, milestones and CDRL.

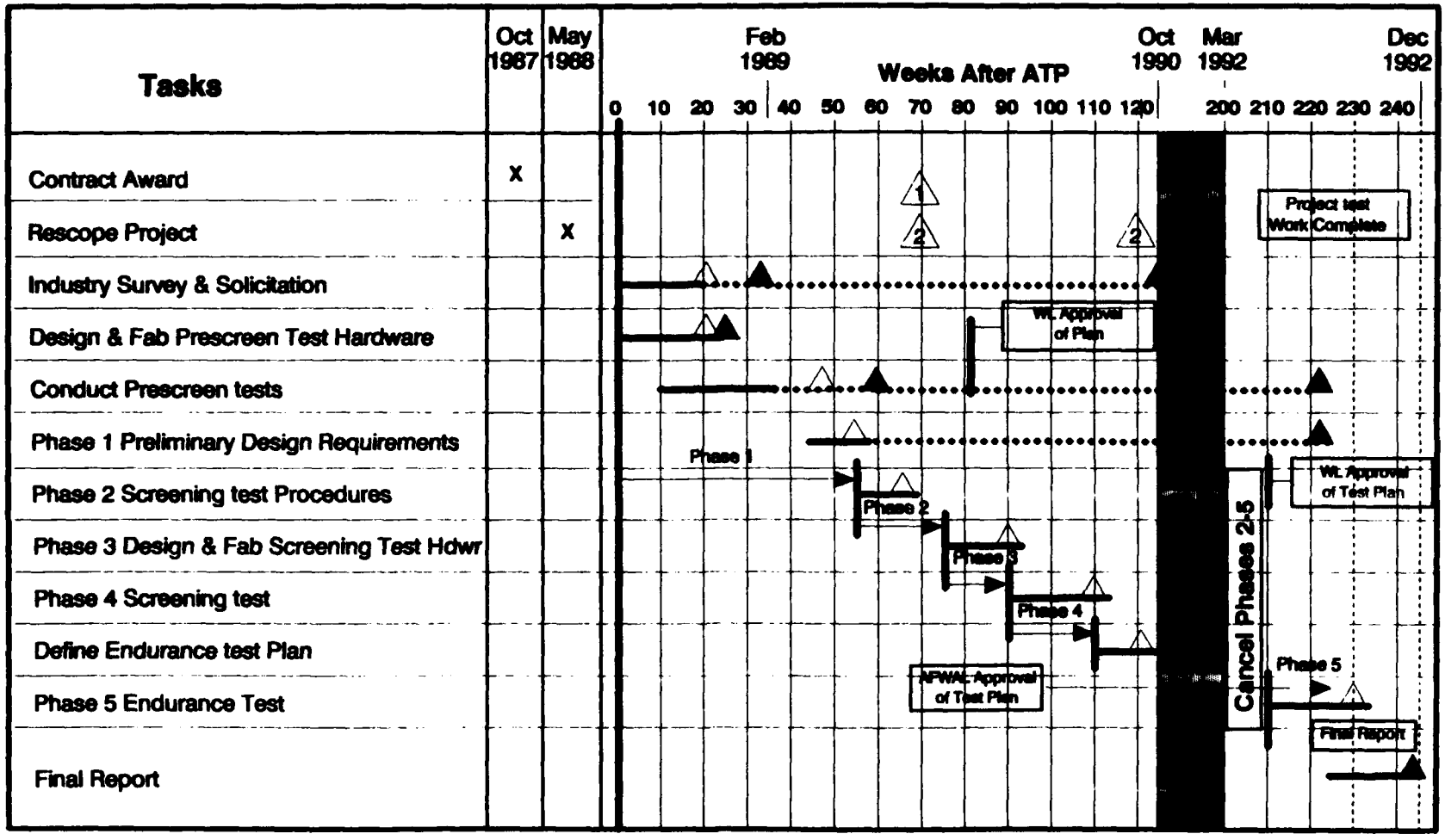

LEGEND: 1 CDRL Number 5 - Oral Presentation 2 CDRL Number 9 - Report

FIGURE 2. Project Schedule - High Temperature Seal Project

2. PHASE 1-PRELIMINARY DESIGN REQUIREMENTS

2.1 Seal Selection

2.1.1 Vendor Survey and Response

Fourteen manufacturers of nonelastomeric high-pressure/high-temperature hydraulic seals were contacted to determine if seals for the conditions described for this project were available. The suppliers were invited to submit drawings of the proposed seals. Suppliers which submitted designs are listed below and those identified with an asterisk (*) responded with seal designs and sample seals.

Dynamic Seals

* The Advanced Products Company
33 Defco Road
North Haven, Connecticut 06473
(Piston seals and rod seals)

American Variseal Corp.
510 Burbank Street
Broomfield, Colorado 80020
(Piston seals and rod seals)

* Advantec Division of Greene, Tweed & Co.
7101 Patterson Drive
Garden Grove CA 92645-5037
(Piston seals and rod seals)

C. E. Conover & Co.
333 Passaic Ave.
Fairfield, New Jersey 07006
(Piston seals and rods seals)

* Cook Airtomic
P.O. Box 1038
Louisville, Kentucky 40201-1038
(Piston seals and rods seals)

Dynamic Seals (continued)

* FURON
  Mechanical Seal Division
  4412 Corporate Center Drive
  Los Alamitos CA 90720
  (Piston seals and rod seals)

* R. E. Krueger Co.
  883 West 16th St.
  Newport Beach CA 92663
  (Piston seals and rod seals)

* Kaydon Ring and Seal, Inc.
  P.O. Box 626
  Baltimore MD 21203

* W. S. Shamban & Co.
  Aerospace Products Group
  2951 28th St., Suite 2010
  Santa Monica CA 90405

Static Seals

* Rosan Products
  3130 W. Harvard St.
  Santa Ana CA 92799
  (fluid boss adaptors)

* Sierracin/Harrison
  3020Empire Avenue
  Burbank CA 92504
  (static "K" seals)

* Furon
  Mechanical Seal Division
  4412 Corporate center Drive
  Los Alamitos CA 90720
  (fluid boss seals)

All seals used in the program were supplied without charge by vendors. At least six sets of seals were supplied by each vendor. However, some vendors supplied many more.

The seals concepts proposed by the vendors are shown in appendix A.

2.1.2 Analysis of Proposed Seals

Since the program requirements were to use nonelastomeric seals, the one proposal that used elastomeric elements was not accepted.

The remaining proposed dynamic piston seals and rod seals fell into three groups as summarized in Table 1.

TABLE 1 - SEAL TYPES AND DESCRIPTION

SEAL TYPE AND DESCRIPTION	SECTION
1. Radially energized spring loaded polymer seals with an antiextrusion ring downstream of the spring energized sealing jacket.	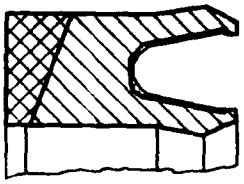
2. Split sealing rings with various joint designs. These designs are similar to those described in AIR 1077 (reference 1), in that they utilize split face seal type rings (either one or two rings) in conjunction with a radial leakage blocking ring.	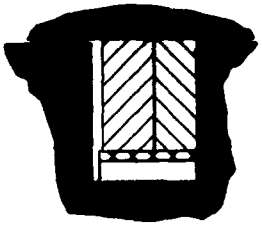
3. Seal rings which are spring loaded axially and which also employ a wedge ring to provide radial preload.	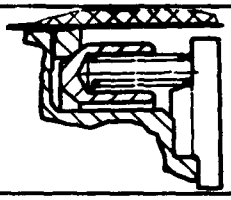

The static seals which were provided for the program consisted of the Rosan specialty port boss adapter, the Harrison K seal and Furon port boss fluid fitting gaskets.

It was anticipated that port boss seals would be needed during the experimental investigation to conduct fluid into the seal test modules, so the port boss seal gaskets were obtained as well as the specialty adapter. The scope of the testing only allowed evaluation of the Rosan adapter fitting and Harrison K seals.

Most of the dynamic seal types were rigid enough that a "split gland" type of arrangement would be needed for their installation. Static seals would be required to seal the additional leak paths created by the split glands. The K seal has a long documented history of success in this type of sealing application, and under temperature and pressures expected during the investigation. It was then decided to evaluate the K seal in this application.

In addition, the K seal was used in the fluid boss seal application for the first piston seal test module.

2.1.2.1 Radial Spring Energized Seals

The first group of dynamic seals (the radially energized spring loaded polymer seals) were similar in design to afford a common analysis. While the materials and design of the sealing jacket, loading spring and antiextrusion rings differed between manufacturers, the sealing principles were the same.

In fact, all dynamic seals must serve as a dynamic seal at the dynamic interface, and as a static seal in at least one other location in the sealing groove. This is illustrated in Figure 3.

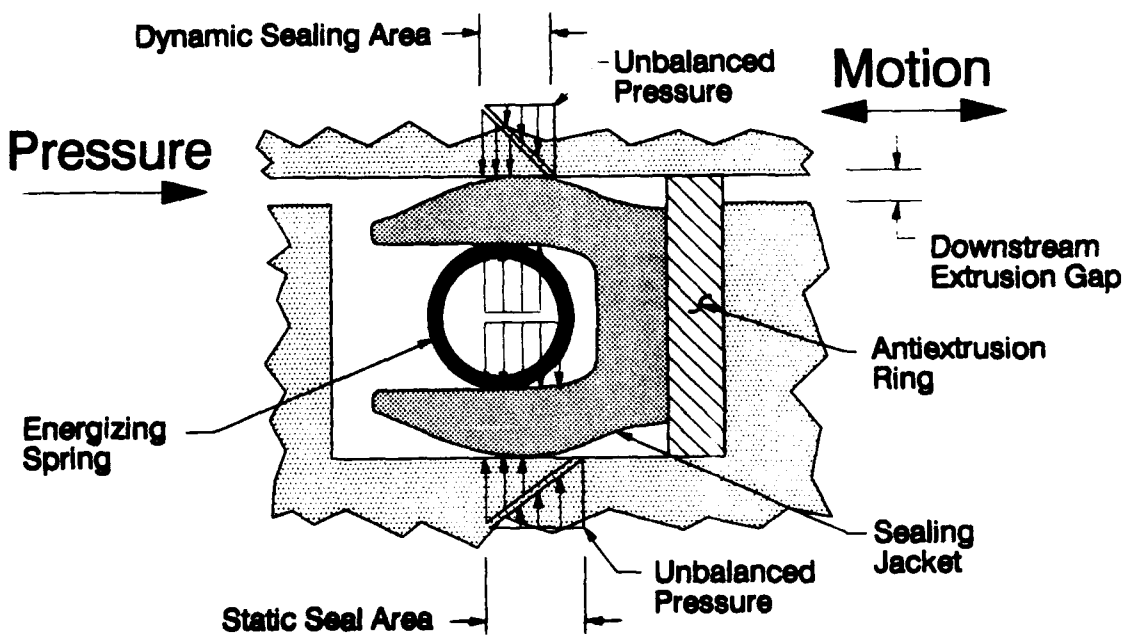

FIGURE 3 - DYNAMIC SEAL INSTALLATION SHOWING BOTH DYNAMIC AND STATIC SEALING AREAS

The illustration shows that a net imbalance of radial forces occurs on both the static and dynamic sides of the seal, due to the design which allows the internal sealed pressure to extend beyond the external sealing contact point. The external pressure decreases from the upstream value to the downstream value over the contact area. The difference between the greater internal force and the lesser external force on the sealing jacket is the resulting "self-energizing" force that compresses the sealing surfaces (seal and housing) together, thus effecting the seal.

Some factors which affect seal performance are shown in Table 2.

TABLE 2 -SEAL PERFORMANCE PARAMETERS

PARAMETERS	DESCRIPTION
Fluid properties	viscosity, specific gravity
Fluid pressure	pressure
Flow channel characteristics	area, shape, length
Interface characteristics	load, materials, surface topography, apparent area, projected area, apparent contact stress, contact stress

Figure 4 shows how the seal performance parameters shown in Table 2 relate and interact to produce leakage and seal wear.

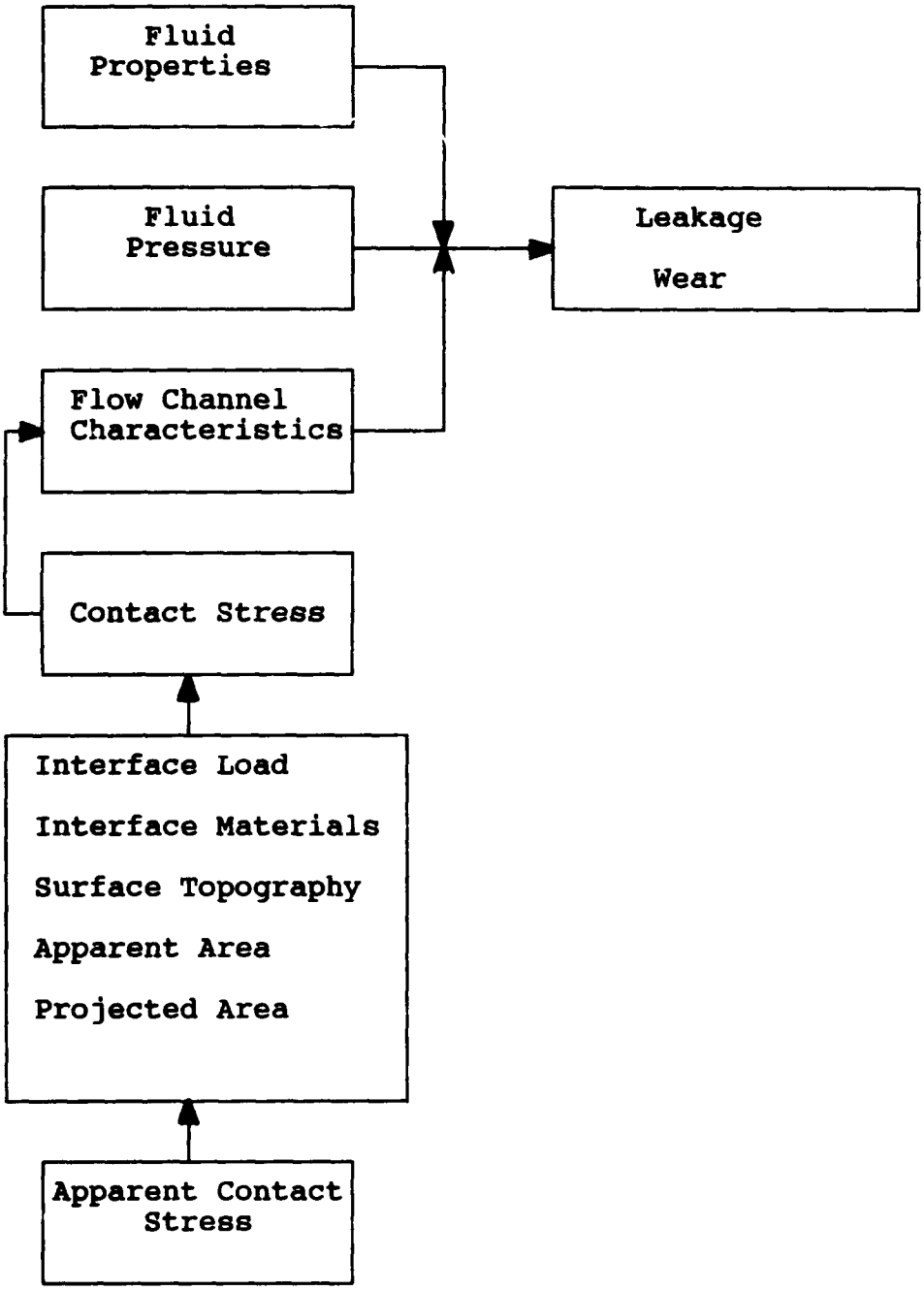

FIGURE 4 - INTERACTION OF SEALING PARAMETERS

A very comprehensive study of these related factors affecting seal performance and the mechanism of leakage control within the sealing contact area was conducted during the early 1960s and is reported in References 2 and 3. In Reference 2, the goal of developing general design criteria was not achieved, but a methodology of relating leakage to a "conductance parameter" was developed.

The conductance parameter was a coefficient to be used in the laminar flow equation to compute the leakage or flow through a clearance when the geometry (flow channel characteristics in Figure 4) of the clearance is well understood. The coefficient or conductance parameter accounts for the actual flow path geometry that may exist at the sealing interface, and depended on understanding and predicting the actual contact area between the sealing surfaces as it relates to the calculated or projected contact area. In general, if the two sealing surfaces are in 100 percent contact, no path is available for leakage. When the two surfaces are partially in contact (i.e., touching on the high spots) the conductance parameter is used in conjunction with the application variables (fluid pressure, viscosity, etc.) to predict the leakage flow.

The challenge for the work documented in Reference 2 and 3 was to establish loading conditions that would provide 100 percent contact, and design rules for calculating conductance parameters when the loading is less than that required to produce 100 percent contact. Previous work (Reference 4) showed experimentally that complete plastic flow of the contact surfaces would occur when the apparent stress a (contact load divided by gross projected area) is equivalent to three times the tensile yield strength y of the material in contact.

The work reported in Reference 2 showed relationships between derived flow conductance parameter and apparent contact stress for a number of specific materials. Also, relationships were established in both References 2 and 3 between the flow conductance parameter, apparent contact stress and the Meyer hardness for the materials.

For the static seal portion of the dynamic seals presently considered, it is only required to establish 100 percent contact between the seal and the gland, because the desired result is zero measured leakage.

To get a perspective for numerical values representative of PTFE, (one of the common materials for seal jackets), we show the following example:

PTFE PHYSICAL CHARACTERISTICS

Tensile yield strength	Meyer Hardness
2,000 psi*	3,870 psi**

According to Reference 4 the required apparent contact stress to cause complete surface contact would be:

$$a = 3\ y = 3 \times 2000 \text{ psi} = \underline{6000 \text{ psi}}$$

Reference 2 (Volume I, page 170) reports experimental data showing very low conductance (1X10-18 or nearly full contact) for apparent contact stress of 0.2 to 0.6 times the Meyer hardness. These data were for metal gasket static seals against surface topography of 25 to 124 micro inches peak-to-valley.

When these values are converted to a ratio of tensile yield strength of the materials, the values range from 3 to 4, or somewhat higher than that shown by Tabor in Reference 4. However, caution should be exercised in this comparison, because the work reported in Reference 2 explored numerous variations of parameters such as surface finish and material hardness, both of which are shown in composite in the Reference 2, page 170 citation. Examination of other data reported in Reference 2 shows a strong relationship between surface finish and apparent contact stress required to achieve low leakage, particularly in harder materials. This agrees with intuitive assessment.

Reference 2 (Volume I, page 136, Figure 85), shown as Figure 5, illustrates data specifically for the (PTFE) material presently considered. The data show 5000 to 11,000 psi apparent contact stress required to achieve 1X10-18 in^3 conductance parameter (nearly full contact).

When compared to material listed tensile yield strength of 2000 psi,

$$a = \frac{5000}{2000} = \underline{2.5\ y} \quad \text{to} \quad a = \frac{11{,}000}{2000} = \underline{5.5\ y}$$

---

* Dupont- Properties of Teflon Resins

** Reference 3, page 13, Table 2-1

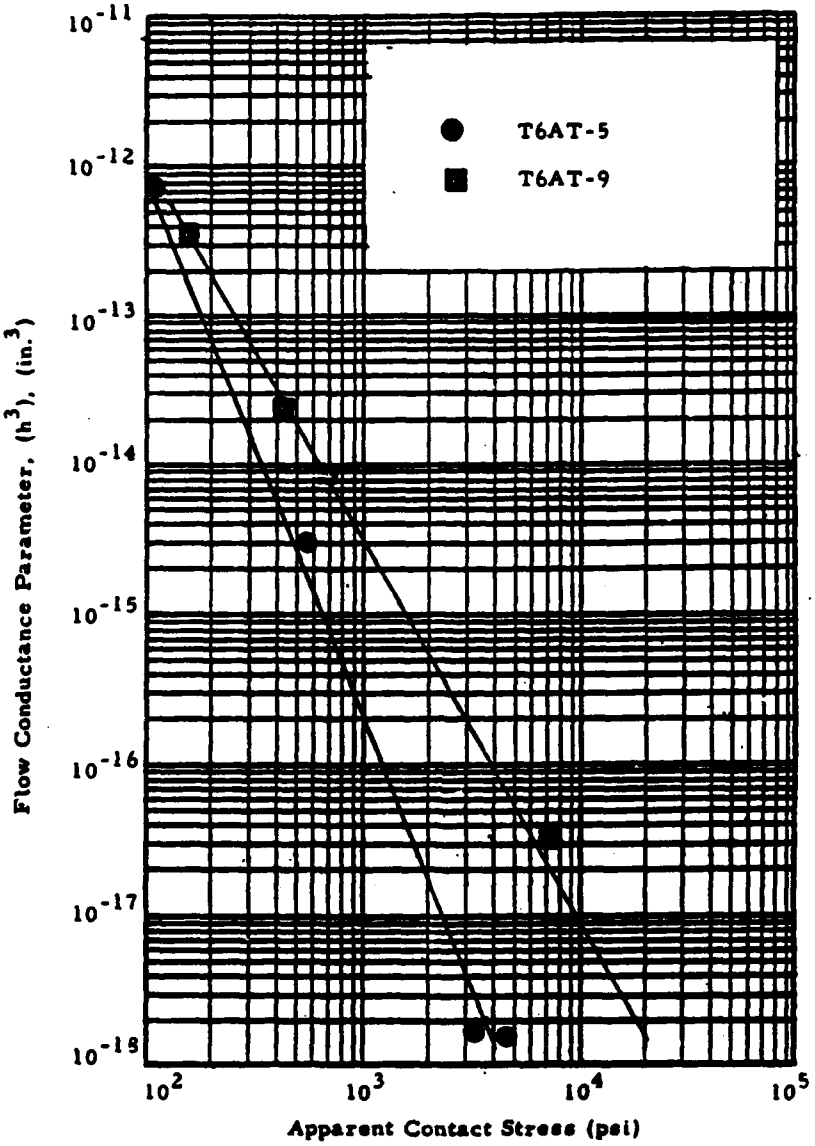

FIGURE 5 - FLOW CONDUCTANCE RELATED TO CONTACT STRESS

It appears (in the present example of the radially energized spring loaded seal) that for the seal to function properly in the static mode, the energizing spring must provide enough load to produce 5000 psi apparent contact pressure, in order that 100 percent contact is achieved.

For the 1.75-inch-diameter piston seal (1.75 X = 5.5 in circumference), if we assume a contact width of 0.02 inches,

$$\text{Area} = 5.5 \text{ in} \times 0.02 \text{ in} = 0.11 \text{ in}^2$$

The total required spring load would be:

$$F = a \times A = 5000 \text{ psi} \times 0.11 \text{in}^2 = 550 \text{ lb}$$

$$\text{or about } \frac{550 \text{ lb}}{5.5 \text{ in}} = 100 \text{ lb/in of circumference.}$$

Reference 3 (page 13, paragraph 2) states "creep may have an important effect on the magnitude of Meyer hardness number and index." This also means that creep phenomena would have an effect on the apparent stress required to achieve 100 percent contact at the sealing surface. PTFE, in particular, is known to "cold flow" or creep under loads which are less than the rated yield strength. This phenomena tends to reduce the apparent stress required to obtain full surface contact, and is a good feature for a static seal material. Because of this action, however, the energizing spring for the type seal presently considered (Figure 3) must provide the initial contact load and also produce a sufficiently low spring rate to maintain the contact load after creep and wear have occurred, and to accommodate tolerance variations in the mating hardware.

While the individual design of each seal is proprietary, an analysis was conducted on a representative spring energized seal (Appendix B), based on actual measurements of the seal.

The calculations indicate that the spring load would provide only about 10 percent of the required load for full contact (10.48 lb/in vs. 100 lb/in) when based on the 0.02 inch wide machined contact strip.

However, it is noted (Figure 6) that the shape of the seal lip is such that when the seal is installed, a sharp corner (perhaps as small as 0.002 inches wide) is initially loaded against the seal groove surface. This could then provide the 100 lb/in loading required to effect full contact at least in the local area. The combination of spring loading and "cold flow" (creep) was considered to probably result in sufficient contact to initially seal at low pressure (0-1000 psi). After that, with the application of higher pressure operating on the previously unbalanced area (Figure 3), the seal should become self-energizing and self-sealing. Under these conditions, the contact stress is likely to be somewhat self-regulating in that the sum of the spring force and increased pressure will cause plastic deformation (creep). This flattening effect then would cause contact area to increase as contact load is increased, thus maintaining somewhat constant contact stress (load divided by area).

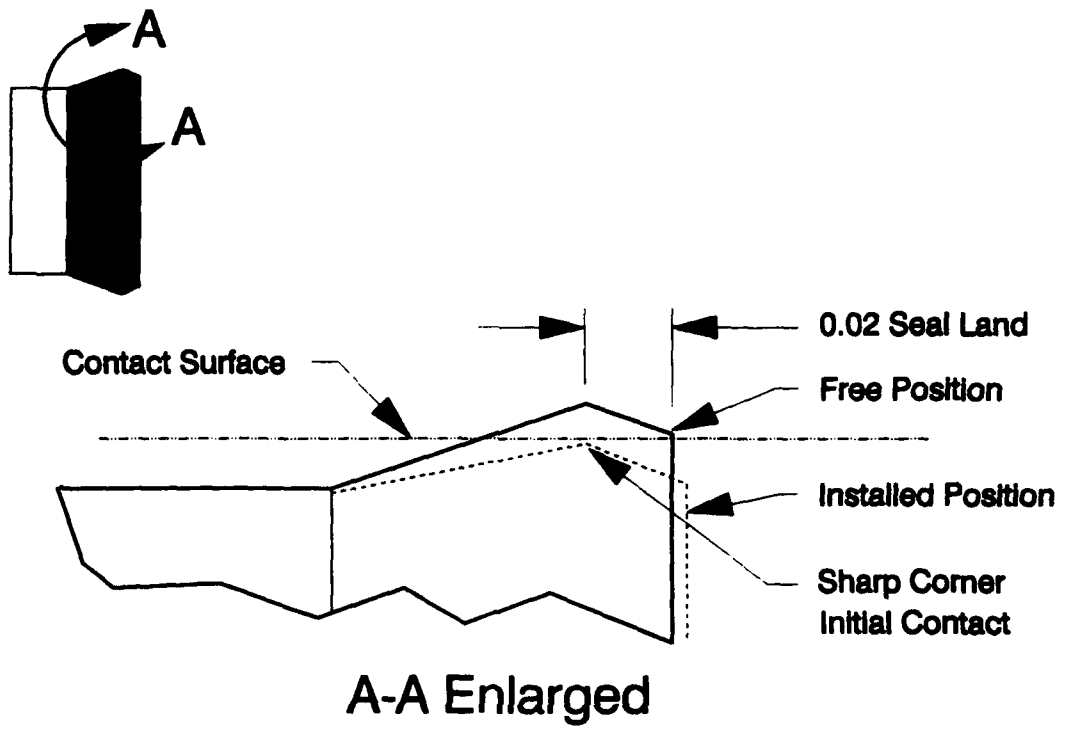

FIGURE 6 - CONTACT GEOMETRY OF SPRING ENERGIZED SEAL

As the jacket material (outside cover surrounding the spring) is dimensionally flattened, the spring would lose some load due to reduction in spring compression. The calculated rate for the spring (Appendix B) was 1566 pounds-per-inch. A plastic deformation of 0.004 inches of the seal jacket (more than 10 percent of the initial 0.034 inches squeeze) would result in a spring load reduction:

$$0.004 \text{ in} \times 1566 \text{ lb/in} = 6.26 \text{ lb}$$

or $$\frac{6.26}{53.25 \text{(original load at 0.034 in squeeze)}} \times 100 = \underline{11.75\%}$$

This flattening would produce an approximate 0.008 inches increase in contact width or a new width of .010 inches.

The new spring load would be:

$$\frac{(53.25 \text{ lb} - 6.26 \text{ lb})}{5.077 \text{in (circumference of spring)}} = \frac{9.256 \text{lb}}{\text{inch circumference}}$$

The contact stress would reduce to:

$$\frac{9.256 \text{ lb}}{.010 \text{ in}^2} = \underline{925.6 \text{ lb/in}^2}$$

Because this is not the initial contact required to "seat" the surfaces, but rather the residual stress available to maintain the seal after the surfaces have been deformed, it should be sufficient. The amount of cold flow or creep caused by the internal fluid pressure may be considered to be an unknown, but the contact stress should not be expected to exceed half the contained pressure (due to the triangular pressure distribution in Figure 3). Within the range of zero to 8000 psi, this could further deform the jacket, but may not if the original contact stress is at least 4000 psi.

The remaining question is the ability of the seal to maintain contact at reduced temperature.

The PTFE resin materials have a thermal expansion rate of about ten times that of the adjacent metal parts (6.5 X 10-5/^{o}F versus 6.5X10-6/^{o}F). The energizing springs are made in such a way that they are not stiff circumferentially but provide design stiffness radially. This would mitigate temperature expansion or contraction effects caused by the spring. It is understood that some effect could be caused by the high shrink rate of the PTFE jacket when hoop stress is considered. The low tensile modulus of the jacket, though, should allow the spring to overcome these effects at low temperature. It was decided that low-temperature performance characteristics of the seal could best be determined by test.

For dynamic sliding type seals, such as the moving portion of the spring energized seal presently considered, one of two types of sealing mechanisms is generally postulated (Reference 2, Vol II, Page 7 and page 8).

Interstitial seals are those in which the fluid is contained by a close fitting concentric bushing type of seal system. These seals always operate with a finite clearance between the moving elements and, therefore, wear is low. Also, the theory for these types of seals is well understood. These seals usually leak at a much greater rate than the type which will be described next.

The interfacial seals are those in which the sealing surfaces move or rub against each other. A good description of this type of seal would be to say that it is a moving version of the static seal surfaces previously discussed.

Reference 2 discusses difficulty associated with analysis of dynamic seals. In the case of the interfacial seal (rubbing contact) the sealing problem is more complex because there exists a tradeoff between leakage rate and seal wear. As previously discussed, the total seal contact area is increased with increasing contact load. This increasing load, however increases the friction between the surfaces and, therefore, increases the wear on the contacting surfaces.

A technique for modelling the leakage behavior of the dynamic seal is presented in Reference 2, pages 33 thru 36. This method entails deriving a conductance parameter by assuming a leakage flow theory and then correlating experimental results to express the conductance parameter as a function of surface topography.

This technique was applied to a well known elastomeric seal configuration, the V-ring. (Reference 2, Section 7.3, page 188). In this exercise, good experimental data were obtained for the particular type of seal, but the experimental verification did not correlate well with the analysis.

A subsequent body of work was accomplished (Reference 3) in which additional effort was made to characterize the sealing phenomena for sliding interfacial seals.

While the results from this work fell short of providing universal design procedures, they were more definitive than the previous cited work.

One conclusion was that the wear particles generated by the dynamic seals were usually of a size and number that the sealing surfaces are usually separated by a finite amount, and as such they could be treated as fixed clearance seals.

When treated as fixed clearance seals, the fluid mechanics relationships would apply and leakage could be predicted with some accuracy. According to the study, the effect of the wear particles are most pronounced on elastically deformed interfaces, whereas plastically deformed surfaces (such as PTFE and other creep prone materials) would be more tolerant and hence more reliable.

Because all the radially energized spring loaded seals were made of polymer type materials, they would fall into this category. Also this type seal, to a large extent, automatically transfers the spring load used to accomplish the static sealing to the dynamic interface as well. Because of this, it is somewhat an academic exercise to discuss the effect of the interface load and bearing stress on the dynamic side. If the load were adequate to provide 100 percent contact on the static sealing area, then it is probable that the load is excessive for operation of the dynamic surface with regard to friction and wear. Factors which would tend to mitigate this effect include the "cold flow" phenomena discussed earlier, which allow the contact area to adjust to a lower stress. Testing would be required to evaluate the wear and leakage. All the radially spring energized seals were then considered candidates for test evaluation.

2.1.2.2 Split Sealing Rings

Figure 7 illustrates the sealing principle of the jointed or split sealing ring. This type seal uses one or more noncontinuous rings (usually rectangular in cross section) to seal against the dynamic surface, and statically against the downstream side of the seal groove. The success of the design depends in part upon the accuracy of manufacture and the tightness of the break or joint in the ring. (Some are made with labrinth type joints.) The cross section shown in Figure 7 shows only one sealing ring instead of two which are often used with this type design. When two sealing rings are used together, the joint gaps are placed so as not to coincide with each other to minimize leakage through the gaps. The upstream pressure forces the sealing ring against the dynamic moving surface and the opposite static side of the seal groove. As the sealed pressure decreases across the sealing ring, the resulting force imbalance produces the surface contact stress. Since these are the only forces available to create contact stress, the contact pressure can never be more than the sealed pressure, and as a result, the surface deformation is small.

The resulting leakage flow is, therefore, largely determined by the surface topography and precision of fit between the seal and the adjacent parts. Additional leakage occurs at the ring joint in the case of the single ring seal shown. The inner sealing ring impedes fluid from radially flowing through the joint gap.

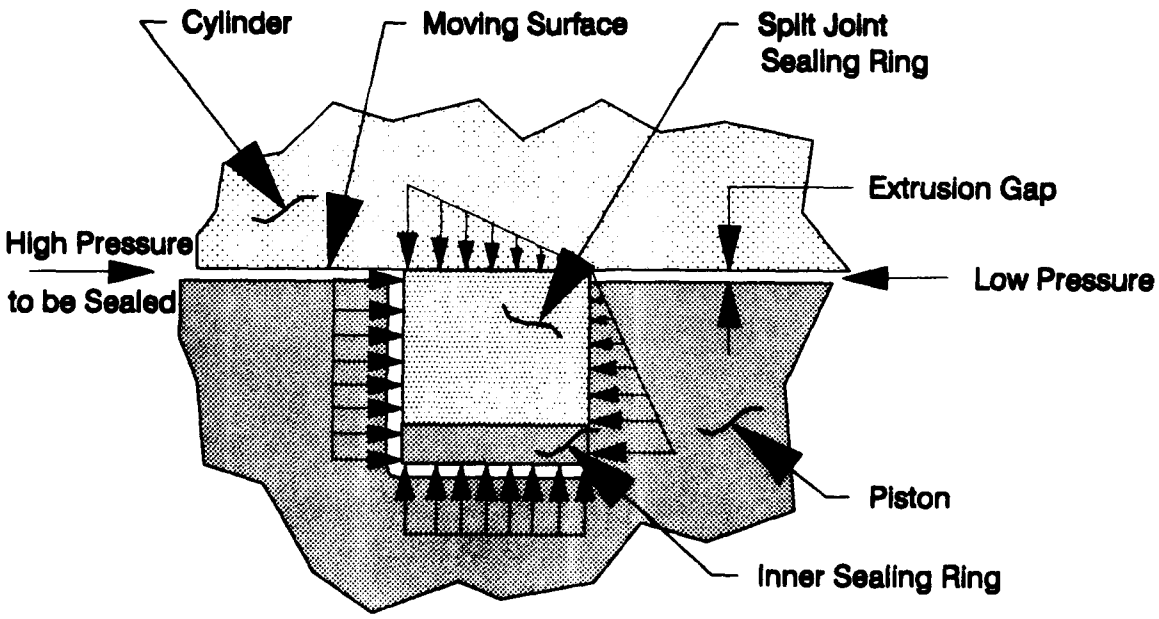

FIGURE 7 - HYDRAULIC FORCES ON TWO-PIECE SEAL RING

Reference 2, Volume II, established methodology for predicting seal leakage for this type seal by means of fluid mechanics calculations based on the surface roughness and fluid parameters. The methodology was then evaluated experimentally with the result that the experimental seals leaked about twice the amount predicted by theory. These tests were also conducted under static conditions rather than dynamic. Seals of this type, manufactured from PTFE based materials, have a long history of good service, in both military and commercial aircraft, when used as the internal piston head seal where some leakage is acceptable. It was considered that these seals would provide excess leakage in the high-temperature, high-pressure environment of this program. However, it was felt that these seals should be evaluated at least to the point of static leak tests. The static leak check would not require a large expenditure of time or effort to accomplish and would give a quick indication of the viability of each design.

2.1.2.3 Axially Spring Energized Seals

The axially energized seal embodies characteristics of both previously described seals. The sealing ring contacts the dynamic surface and the downstream side of the seal groove, as with the split seal ring discussed earlier. The seal ring has no joint or break, however, and is both axially loaded (assisting the static seal) and radially loaded by the wedge shaped load ring and axial springs.

The contact stress that produces the sealing is, in this case, due to both the action of the spring preload and the sealed pressure.

The load transmitted through the sealing ring to create contact stress is reduced by the circumferential stress developed in the ring. This is due to the fact that the sealing ring is uncut or continuous. This could be a significant factor in the case of a metal sealing ring but probably is not a large factor when considering polymers with much lower elastic modulus.

This effect is reduced also when the sealing rings are constructed with a close initial fit with the seal housing.

The axial spring/wedge energized design provides an additional benefit in design flexibility because the wedge angle can be adjusted to apply either more or less of the axial spring load in the radial direction. This then permits the design to be tailored to provide optimum contact stress for both the static seal portion and the dynamic seal surface.

Two seal designs of this type were provided for the program. Sufficient design details were not available in advance to calculate the contact stress, so it was decided to evaluate both designs by testing rather than evaluate by analysis.

2.1.3 Performance Criteria

Seal performance is manifest in two categories: leakage and longevity.

Usually these parameters are evaluated in dependant terms, i.e., how long a seal will perform under given operating conditions before a specified leakage value occurs.

Other performance factors include seal friction. Another important consideration is a measure of how easy the seal is to install without being damaged.

For the purposes of the prescreen test activity, for which the object was to compare seal types and for which a specified program of test conditions would be applied to all candidates, it was decided that leakage would be the sole criteria for performance and the time required to reach a predetermined leakage rate would be the measure of longevity.

The prescreen evaluation would not necessarily represent a particular mission profile, but it was felt that the pass/fail criteria for the seal should be somewhat representative of actual service performance. Also, it was recognized that the allowable leakage rate limit would be based on the concept that initial leakage would be less and the limit would be reached after significant service.

Accordingly, some tested seal types might start with appreciable leakage but perform for a very long time without exceeding the specified rate limit. For this reason, it was determined that a leakage limit would be set for total leakage volume as well as for leakage rate. Further, while it is true that many seals may leak only under dynamic conditions, a static criteria would be set for all seals.

Present standards for dynamic rod seal leakage allow for about one drop per 25 cycles of operation for new assemblies with additional allowance for worn parts. A value of one drop per cycle was adopted as the limit rate for this evaluation for dynamic leakage for rod seals.

Part of the rationale for this choice is that this is a reasonable quantity to expect to be detected during checkout prior to a mission. The static leakage limit for rod seals was set at two drops per minute. When considering an aircraft mission, this rate would result in less than 5 cubic centimeters leakage per 1-hour mission for each actuator.

The total allowable leakage volume for external dynamic (i.e., rod) seals was set at 200 cubic centimeters. This volume would permit a total of more than 40 1-hour missions to be flown with an actuator leaking one half the maximum static leak rate of two drops per minute.

The consequences of piston-seal-leakage include system heating and reduced efficiency, but not overboard loss of system fluid. It is common to allow more leakage through piston seals in a hydraulic system for this reason. Also, the type of seals used in these applications to reduce friction and improve actuator response are the type which leak at a greater rate than the type used for external seals.

Present technology for these piston seals usually results in 10 to 20 cubic centimeters per minute leakage for each inch of actuator bore. The allowable static leakage limit rate specified for this program prescreen evaluation, was 30 cubic centimeters per minute, and the cycling rate was set at 25 drops per cycle.

A total volume of 500 cubic centimeters was set as the limit for accumulated leakage for piston seals used in the prescreen evaluation.

Static seals were to allow no observable leakage under any time or condition.
The summary of this criteria for leakage then is as follows:

A. Piston Seals
Maximum leak rate----------30 cc/min static leakage or 25 drops per cycle dynamic

Total leakage allowed before stopping test----------500 cc

B. Rod Seals
Maximum leak rate----------2 drops per minute static leakage or 1 drop per cycle dynamic leakage

Total leakage allowed before stopping test----------200 cc

C. Static Seals--No observable leakage under any condition.

2.2 Fluid Selection

To provide the required functionality, hydraulic fluids must exhibit an impressive array of physical and chemical characteristics. Among these desired traits are:

- High bulk modulus
- Good lubricity
- Low cost
- Good resistance to hydrolysis
- High level of chemical compatibility with other materials
- Small viscosity change with temperature change
- Light weight
- Low flammability or nonflammability
- Resistance to thermal decomposition
- Low toxicity or danger in handling or storing
- No environmental damage due to leakage or disposal

One of the requirements for this program was to examine available high-temperature fluids, at least in the areas that would be affected by the program conditions.

Fluids considered include Silahydrocarbon, Fluoropolyalkylether, and MIL-H-27601.

The Silahydrocarbon fluid is a new synthesized material which looks promising for future high-temperature applications. At the time of approval of this contract, only about 50 gallons of this fluid had been produced. Samples for evaluation were provided by General Electric Company and Monsanto Company.

Some types of fluorinated ether fluids are currently being considered as lubrication and hydraulic fluids for the IHPTET engine project, and seem to have promising potential. However, these fluids did not seem to be in a ready state of development for the higher temperatures being considered for this program.

MIL-H-27601 fluid is a petroleum based fluid (sometimes referred to as being deep dewaxed) developed for earlier high-temperature hydraulic systems, in particular, for the SR-71 program. This fluid was in production at the time of approval of this contract and was reported to be operational to 500°F continuous and 550°F for shorter periods of time.

With the goal of reducing variables in the prescreen activity it was decided to evaluate the prescreen candidates with a fluid having a known performance history, namely the MIL-H-27601 fluid. Samples of the fluid were supplied by the manufacturer and also by the Air Force Materials Directorate.

It was planned to evaluate other fluids in the subsequent phases of the program. Before these phases were descoped from the program, samples of the Silahydrocarbon fluids were supplied by General Electric Company and Monsanto Company, but they were returned without being evaluated. MIL-H-27601 fluid, therefore, was the only fluid evalauated in this program.

The properties of this fluid are shown in Appendix C.

2.3. TEST METHODOLOGY

The test methodology consisted of the preparation and delineation of the way that the testing would be carried out to achieve the program objectives.

The analysis portion of phase 1 (previously discussed) concluded that all but one type of the seals provided should be tested. Therefore, the test methodology consisted of primarily specifying how the testing would be set up and accomplished for the specific seal configurations.

The major activities leading to the test methodology are listed below and then discussed briefly:

1) Define schedule of application of temperature and pressure

2). Determine nature of test cycling, stroke length and frequency

3). Determine the general arrangement of the test setup

4). Determine and specify instrumentation requirements

5). Determine and describe documentation

2.3.1 APPLICATION OF TEMPERATURE AND PRESSURE

Most of the methodology items are summarized in Appendix D; Prescreen Test Plan. This summary was originally compiled as a statement of work for subcontractors bidding on the test work and was also furnished as an operation guide for the test operator.

In this appendix, it can be seen that the test fluid was to be deareated so that the tendency to oxidize would be mimimized. The test sequence table shown in Appendix D indicates that the method of testing would be to start each new seal type at a minimum temperature of 500°F and a pressure of 5000 psi and perform a block of testing. Subsequently, the temperature and pressure conditions would be increased in each test block.

The 500°F starting temperature was chosen because it represents current state-of-the-art (SR-71) and the 5000 psi pressure represents the current practice for recent aircraft (V-22). It is understood that the combination of 500°F and 5000 psi is a considerable advancement of current practice.

The upper limits of 8000 psi and 700°F represent the maximum program goals.

It was decided that test pressure and temperature were to be held constant throughout a given block of testing.

2.3.2 CYCLING STROKE AND RATE

The cycling stroke length and rate for this type of comparative testing could be arbitrarily chosen. It was decided, however, to relate the stroking conditions to current production flight control actuators.

Assuming an actuator with a 10-inch stroke, and a response rating of 1.5 Hz at 10 percent stroke would result in a maximum velocity of:

$$V_{max} = r \times w$$

$$10\% \text{ stroke} = 1.0 \text{ inch}$$

$$r = 0.5 \times \text{stroke} = 0.5 \text{ inch}$$

$$w = 2\pi \times \text{frequency} = 2\pi \times 1.5 \text{ Hz} = 9.42 \text{ rad/sec}$$

So: $V_{max} = 0.5 \text{ inch} \times 9.42 = \underline{4.71 \text{ inches/sec}}$

This figure corresponds well with rated velocities for transport aircraft flight control actuators of 3 to 5 inches per second.

Heat buildup due to rapid cycling in accelerated testing is a concern, so a reduced stroke length or reduced frequency is sometimes a consideration.

The parameters chosen for this program were:

3-inch stroke

0.5-Hz cycling rate.

These conditions resulted in a maximum velocity:

$$V_{max} = r \times w$$

$$r = 0.5 \times \text{stroke} = 1.5 \text{ inches}$$

$$w = 2 \times \text{frequency} = 2 \times 0.5 \text{ Hz}$$
$$= 3.14 \text{ radians per second}$$

$$V_{max} = 1.5 \text{ inches} \times 3.14 \text{ rad/sec} = \underline{4.71 \text{ inches/sec}}$$

In addition to the long stroke cycling, it was desired to superimpose a "dither" motion in order to create several velocity reversals during each longer stroke cycle. The velocity reversals are thought to interrupt the hydrodynamic fluid layer under the seal, thereby producing a more severe wear condition.

Also, the reversals examine the seal's ability to reseat and continue to seal following a direction change.

A 10-Hz x 0.080-inch stroke dither motion was chosen for the dither condition.

Appendix E is an analysis of the combined stroking motion. As shown in the appendix, in the plot of velocity versus time, a maximum velocity of 7.22 inches per second is achieved at 3 points during each 3-inch cycle, and 14 velocity reversals occur in each cycle.

2.3.3 GENERAL ARRANGEMENT

The general arrangement of the testing facility is shown in Figure 8, along with the identification of the major components of the setup.

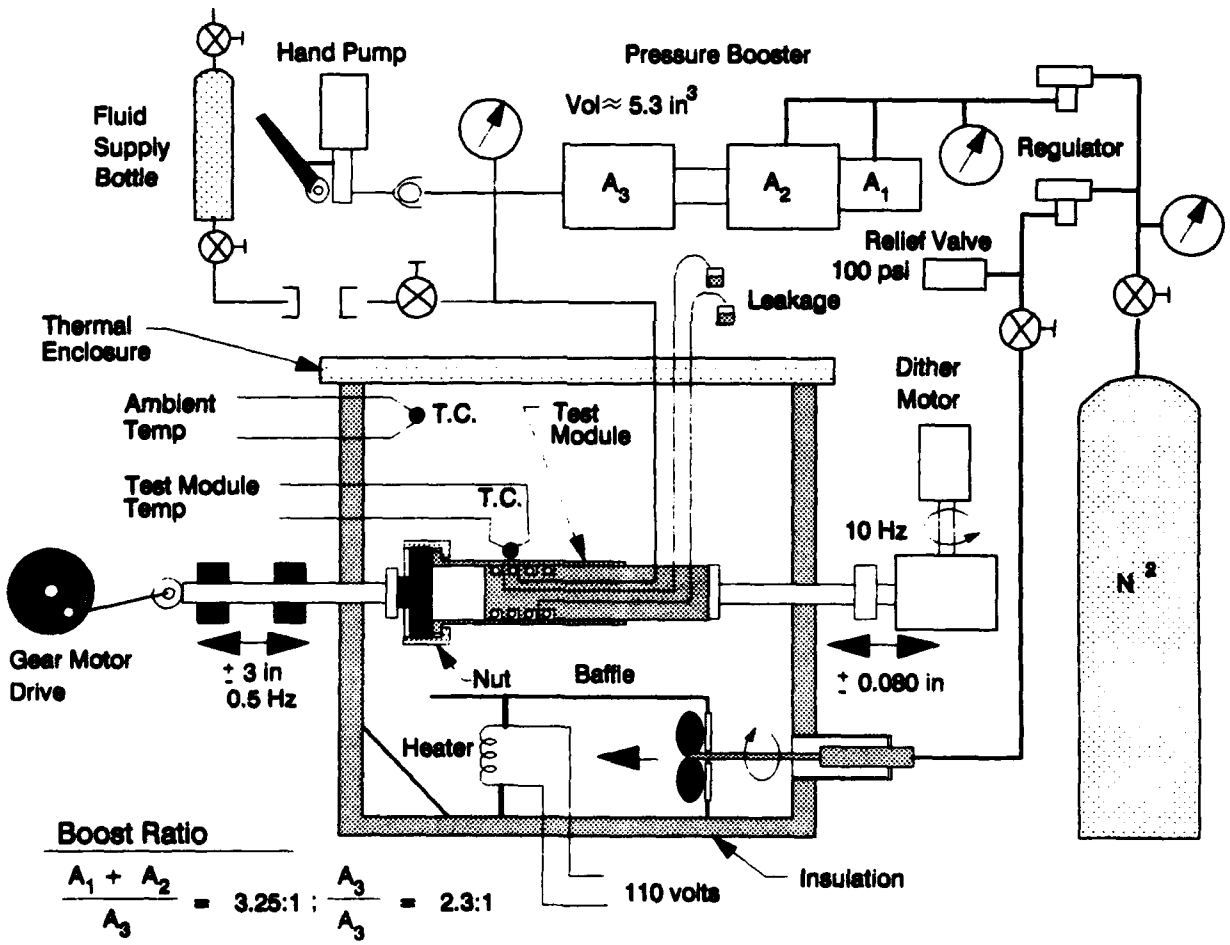

FIGURE 8 - GENERAL TEST ARRANGEMENT

A more detailed description of the important test components will be given later during the discussion of the design activity. Figure 8 shows that a thermal enclosure was fabricated to surround the seal test module.

Test stroking was driven by means of a constant speed electric drive gearmotor. A separate motor driven eccentric cam provided the dither motion.

Test pressure was generated by a gas/hydraulic boost piston intensifier. In this manner, very small volume of fluid, (less than 10 cubic inches) could be maintained under pressure by the high pressure gas source, even as some of the fluid leaked through the test seals. In the case of a catastrophic leak, the maximum amount of fluid that could be discharged was about 5.3 cubic inches. This minimized the potential for fire or explosion from a leak of the fluid into the high temperature environment.

A hand pump was provided to permit periodic recharge of the intensifier. A high-pressure flask was included so that the deareated fluid could be stored and introduced into the test setup.

Thermocouples and thermocouple readout units were used to measure and control the temperature environment in the thermal enclosure.

The leakage from the primary seals under test was conducted to calibrated beakers for collection and measurement.

2.3.4 INSTRUMENTATION REQUIREMENTS

The significant test parameters were temperature, pressure, cycle stroke length and quantity of cycles. Calibrated direct reading pressure gauges were provided to measure the test pressure. It was considered that this would be adequate instrumentation for the pressure because the pressure was held constant during the test.

The ambient temperature and the test module temperature were monitored by means of thermocouples. The ambient temperature thermocouple also provided the reference for the automatic temperature control of the electric heater.

The fixed stroke length and constant speed of the drive gearmotor ensured a constant cycle rate during operation. A cycle counter was mounted on the long stroke drive mechanisim and the constant speed ratio between the dither motor and the drive gearmotor provided the cycling monitor for both motions.

2.3.5 DOCUMENTATION

All test activity and measurements were recorded in a test log book. Temperature, pressure and leakage collection were recorded in the log book, as well as observations made while disassembling the test modules during change of test seals. All critical surface finishes, dimensions and hardness values were measured and recorded prior to and subsequent to each test.

Photographs were made of the test set up and the seals after testing and are referred to and explained in the applicable sections of this report.

2.4 HARDWARE DESIGN

The hardware designed for this program consisted primarily of the prescreen test fixture, and the seal test modules.

2.4.1 TEST FIXTURE

The test fixture is shown in simplified schematic form in Figure 9. This unit consisted of a heavy steel plate frame, main drive gear motor, drive linkage, thermal enclosure with heater, and motor driven eccentric cam dither mechanism.

A 1.5-inch drive arm was mounted to the gearmotor to produce a 3-inch stroke during each revolution. The drive arm rotated at 30 RPM and was designed to produce 2000 pounds of drive force. The output motion from the drive arm and link was converted into horizontal motion by means of ball bushing guides. The horizontal drive rods were attached to a draw bar to which the module under test was fastened. In the case of the piston seal test, the cylinder was fastened to the front draw bar.

At the opposite end of the fixture, a motor-driven eccentric cam produced horizontal motion in a similar drive rod which moved the rear draw bar. The other end of the test module under test was connected to this draw bar. In the case of the piston seal test module, the piston was attached to the rear draw bar. The resulting effect was that the cylinder barrel and the piston moved relative to each other in the prescribed superimposed motion of 3-inch stroke and dither.

A stainless steel enclosure was fabricated to surround the test module under test. This enclosure was insulated on all sides with rigid ceramic insulation and contained an integral horizontal baffle and electric heater. A fan was provided to circulate the heated air from the heater past the module under test.

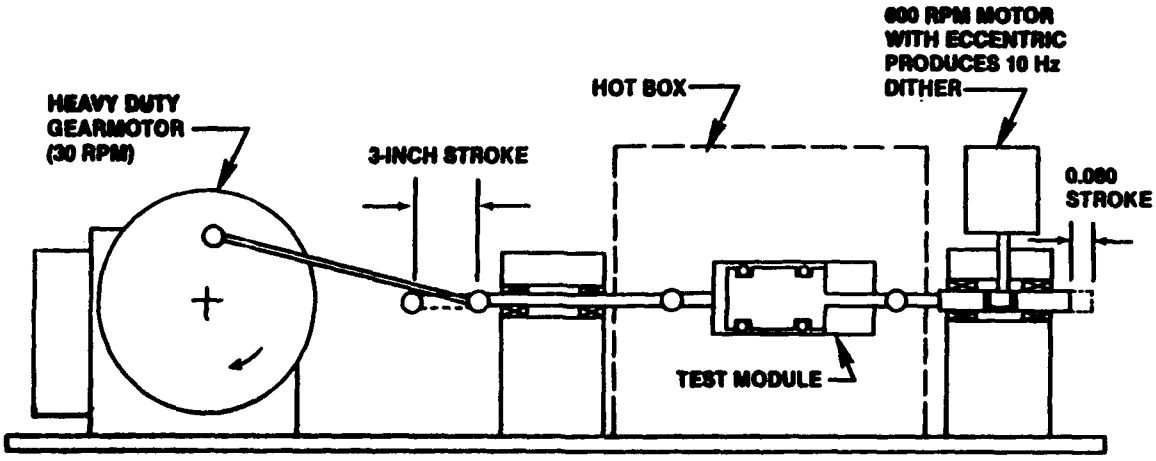

FIGURE 9 - SEAL TEST FIXTURE

Figure 10 is a photograph of the test fixture. In this view the dither mechanism can be seen.

FIGURE 10 - VIEW OF PRE-SCREEN TEST FIXTURE

Figure 11 is a photograph showing another view of the test fixture. In this view, the main drive gearmotor can be seen to the right of the figure, while the piston intensifier is seen in the center, mounted horizontally to the panel. The fluid supply flask is also seen, as well as the hand pump.

A close-up view of the thermal enclosure is shown in Figure 12, with the top cover removed. The piston seal module can be seen inside the enclosure.

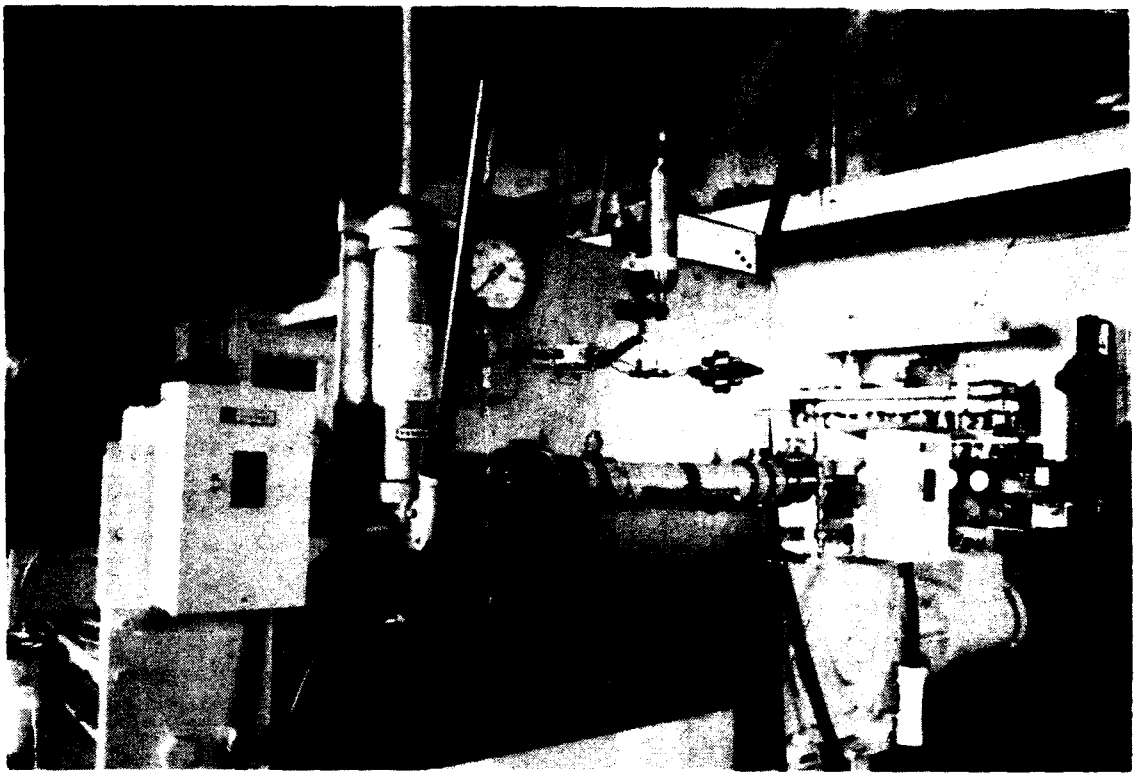

FIGURE 11 - PRESCREEN TEST FIXTURE

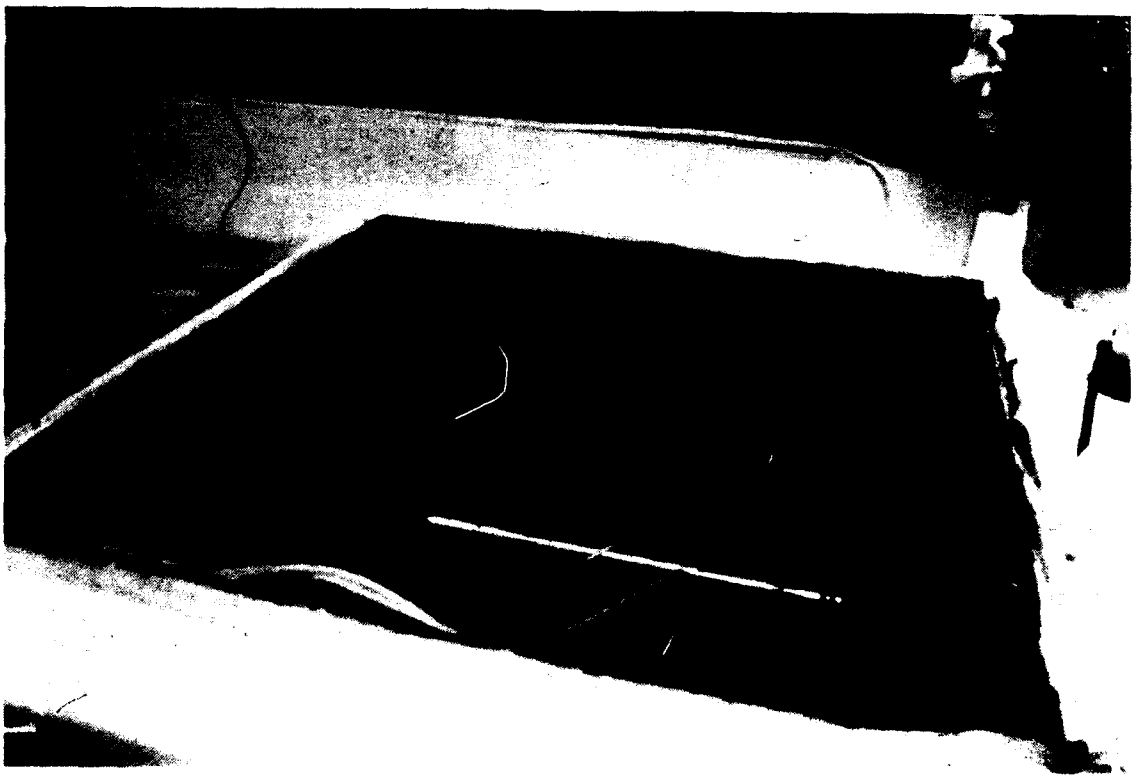

FIGURE 12- CLOSE-UP VIEW OF THERMAL ENCLOSURE

2.4.2 SEAL TEST MODULES

The philosophy of design for the seal test modules was to achieve the maximum usage for the least amount of fabricated hardware. Also, it was intended to design the items, which would require frequent replacement because of wear, to be as simple and inexpensive as possible. To this end, both the piston seal module and the rod seal module were planned in modular form so that the basic unit could be modified to accommodate specific seals by installing peculiar seal retainers for that particular seal, instead of a complete different module for each seal design. In addition to the geometric design, the following design decisions were made:

- Choice of material of construction
- Heat treating or surface coating to be used
- Dynamic clearances and extrusion gaps
- Surface finish for the sealing surfaces

2.4.2.1 PISTON SEAL MODULE

The materials considered for the seal test modules included:

- Titanium alloys
- Martensitic corrosion resistant steels
- High Chrome alloy steels
- Precipitation hardening corrosion resistant steels

Because the prescreen test was to evaluate relative merits between seal designs using baseline conditions, Titanium alloys were declined on the basis of cost of material, difficulty in fabrication, and probable need for tribological coating. Also, this material has an elastic modulus of about half that for steels. It was felt that this could result in excessive cylinder barrel breathing and seal extrusion under pressure.

Martensitic corrosion-resistant steels have given good service in the past in conventional hydraulic equipment, but the fabrication process requires a multiple-step rough-machine and finish-machining process. This is due to the high austenitizing temperature and the subsequent distortion during the quench-hardening procedure. This material was declined for these reasons.

High-chrome alloy steels were not used for the same reasons as those given for the Martensitic materials, and for the additional reason that tribological problems might be encountered when these metals were allowed to rub on other materials.

The precipitation hardening materials have the advantage in that the hardening process can be accomplished at a temperature below which scale will form or distortion will occur. This means that parts fabricated from these materials can be completely finish machined prior to heat treating. Also, these metals exhibit good retention of strength at high temperature. These materials were further considered for these merits.

Several precipitation hardening materials are available. Among those considered were PH 17-4, PH15-5, and PH 13-8 Mo. The PH 13-8 Mo material was chosen because it exhibits the best combination of heat treating simplicity and resulting strength.

In the prescreen test application, it was decided to use this material for both mating parts (that is for the barrel and the piston on the piston seal test) to avoid dissimilar thermal expansion. It was anticipated that this material would perform reasonably well with itself in rubbing contact; however, it was planned to isolate the parts in motion, whenever possible, with a nonmetal bearing.

Two piston seal test module assemblies were fabricated. The first module was constructed so that seals of two different designs could be tested concurrently, thereby, reducing the number of tests required. With this design, however, two of the same type of seal could not be tested concurrently. During early testing, it became apparent that one of the failure modes was that material from a failed seal could alter the dynamic surface passing under the other seal, thus compromising the test result of the second seal. It was then necessary to fabricate a new piston and set of seal glands so that each type of seal could be tested "back to back" with itself. The second module was designed so that the test barrels already fabricated for the first module could be used with the second.

Cross-section views of the test modules are shown in Figures 13 and 14.

Both test units are similar in that a piston incorporating three fluid passages is used. One fluid passage applies the test pressure between the two seals under test, and the other two passages collect leakage fluid from their respective seal and conduct it to the measurement beakers.

In each case, the piston (which is actually two parts, including the end cap) mounts modular adapters which contain the special adaptor groove for the test seal. A standard MIL-G-5514F-222 seal groove was provided for the seals designed for standard grooves, but several of the seals required special grooves.

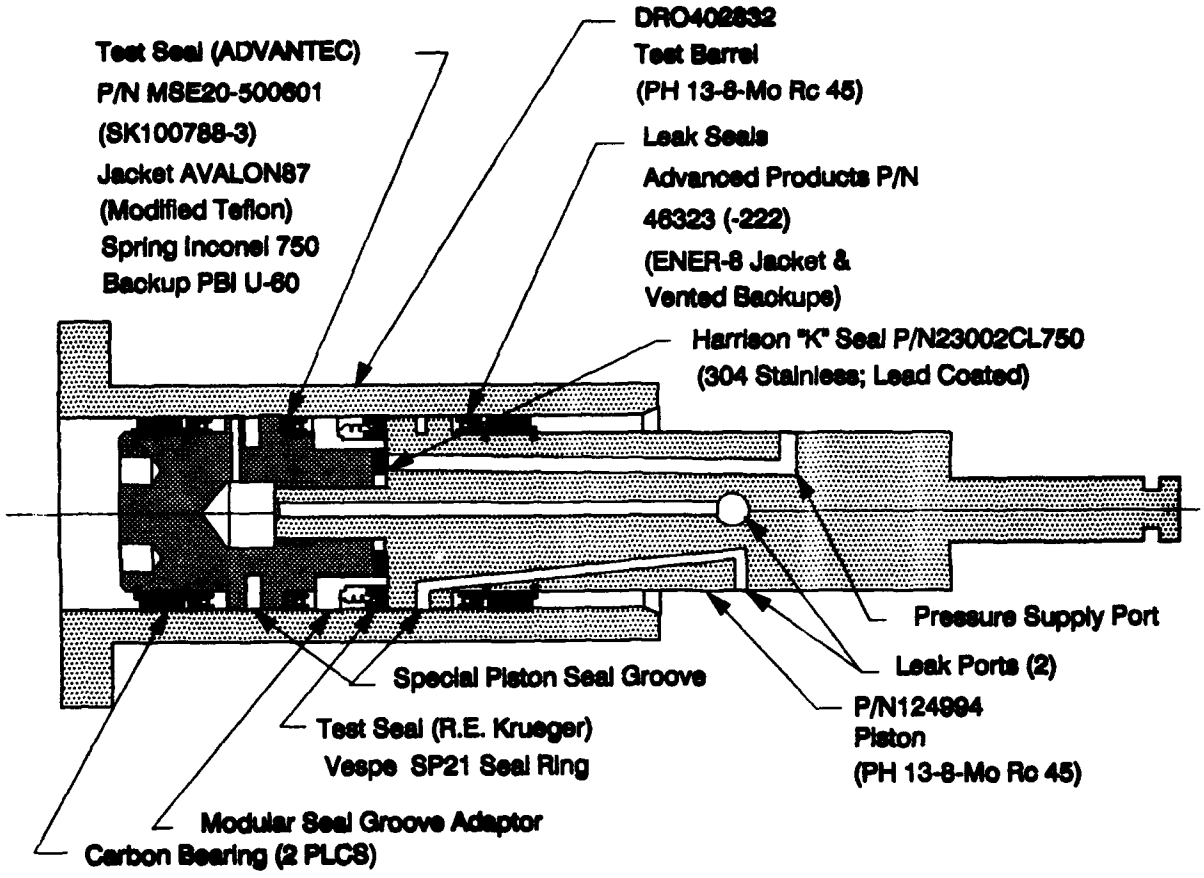

FIGURE 13- ORIGINAL PISTON SEAL TEST MODULE

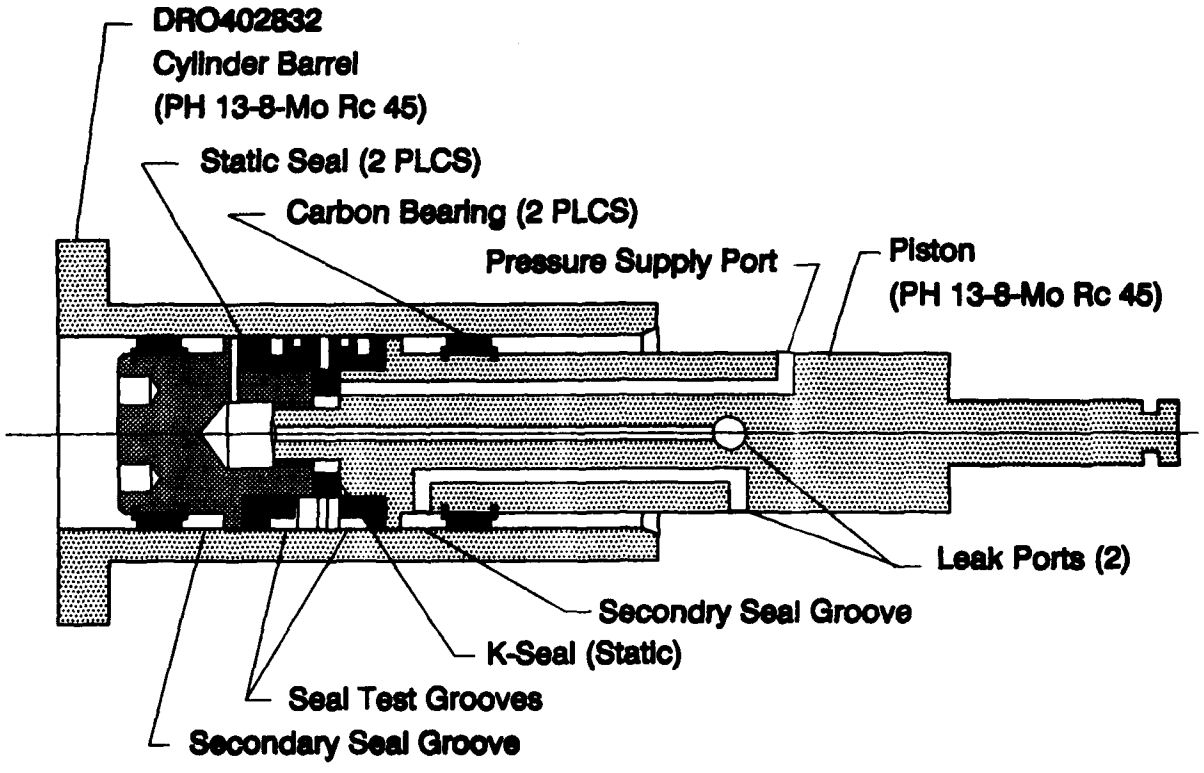

FIGURE 14 - REVISED PISTON SEAL TEST MODULE

Outboard of the test seals, MIL-G-5514F-222 seal grooves were provided for a second set of seals which would operate at ambient pressure to retain the leakage from the main test seals and low pressure passages were provided to return this fluid to measurement beakers.

Both piston-seal test modules were equipped with carbon bearings placed outboard of the leak catcher seals. These bearings were designed to prevent metal-to-metal contact between the piston barrel and the piston.

The original piston-seal test module shown in Figure 11 was provided with special piston ring seal test grooves in the body of the piston and on the end cap. Also, a standard groove and a replaceable insert was provided on the cap. This configuration required only one static seal to seal between the test pressure and the leakage ports, but provided only a single test site for any one seal design.

The revised test module shown in Figure 12 was designed with replaceable test inserts which allowed each variety of test seal to be tested in pairs.

The test barrel was designed as a simple tube except for the ramped seal installation chamfer at one end and a flange at the other. The flange provided the means for attaching the barrel to the test fixture drawbar.

Piston seal test barrels were heat treated to an ultimate tensile strength of 235 Ksi (210 Ksi yield) or Rc 45 minimum by means of the designated H950 heat treatment for this material. See Reference 6 for the supplier information for the PH 13-8 Mo material.

The barrels were sized to provide the maximum diametric clearance (0.006 inches diametric or 0.003 inches per side) allowed per the MIL-G-5514F specification.

Appendix F shows the specified dimensions of the test barrel and illustrates how the barrel wall thickness was designed.

The resulting design provides a pressure expansion ("breathing") of the barrel of 0.00369 inches on the diameter at 8000 psi.

To summarize, the extrusion gap design for the test on the piston rings was about 0.005 inches per side at 8000 psi (0.010 inches diametric clearance, with the barrel held concentric by means of the carbon bearings). This relates to the 0.006-inch clearance that would occur with maximum tolerances allowed by MIL-G-5514F when the actuator is fully side loaded.

The final design consideration for the piston seal modules is that of the surface finish for the dynamic or sliding surface of the test cylinder barrel.

The governing specification for seal grooves and dynamic surfaces in general is MIL-G-5514F (Reference 7). This specification currently dictates a dynamic surface finish of 16 microinches maxiumum for all dynamic sealing surfaces.

It has been assumed for many years, that because an enormous amount of hydraulic equipment has been manfactured using this guideline for design that a surface finish of 16 microinches will produce satisfactory leakage and wear results.

At least two factors cause this assumption to be a significant error.

First, while the 16-microinch specification was the guideline for the construction of volumes of successful equipment, the actual practice has been to produce the equipment with much better finishes. Numerous unofficial surveys found that hydraulic actuators, which pass qualification tests and which provide long life in service, are invariably fabricated with dynamic sealing surfaces measuring less than 10 microinches average roughness. Many have been measured at less than 4 microinches. It is believed that this practice occured because of the lack of good measuring equipment in past years, so the manufacturers erred on the side of smoother finishes to ensure quality.

Conversely, recent experience with a transport product which had been in service for more than 20 years and which had suddenly developed leakage problems with a particular actuator, revealed that the actuator was being manufactured by a different vendor using a surface finish measured at 12 microinches (well within the drawing allowable of 16 microinches). When the finish was changed to 8 microinches, and the part tested, the service life went from 5,000 hours to 55,000 hours.

A second reason the assumption led to error is that the measured average roughness is not a consistent and sufficiently complete description of the surface. Two surfaces having the same measured roughness may give widely differing performance.

The present federal standard for surface finishes is ANSI/ASME B46.1-1985 (Reference 8). This document is a good guide to understanding the other parameters which have been developed and standardized to describe surface finishes.

A second resource for understanding the surface finish parameters is Reference 9. In this document more than 20 surface parameters, measurable with the stylus type proficorder, are disscussed and explained.

DAC has, as a part of its laboratory equipment, a state-of-the-art surface referenced stylus type surface finish analyzer. This unit (Sheffield Measurement Company group 154 Spectre Proficorder) was used to analyze all dynamic surfaces in this program.

Appendix G shows the measured characteristics of three differnt surfaces and illustrates graphically that rougness average Ra is not a sufficient description of the surface topography.

For the purposes of the prescreen test program, it was decided to use the surface finish roughness parameter, (arithmetic average as opposed to a previously used RMS value) Ra, and the surface peak count parameter, Pc, as the basis for establishing surface finishes for the test modules. The Pc parameter is a measure of the quantity and magnitude of the surface irregularities exceeding the average Ra value.

It was decided to furnish the barrels with a nominal Ra value of 4 microinches and a Pc value with as few counts as possible above 10 microinches, as determined early in the program.

2.4.2.2 ROD SEAL MODULE

The rod seal test module is shown in cross section in Figure 15. The general description of the piston seal modules, previously presented, apply to this unit.

The material of construction was PH 13-8 Mo, heat treated to Rc 45 minimum, and the construction was modular.

The primary elements of this design were the test rod, containing the dynamic surface, the main barrel with provision for introducing test pressure and collecting leakage, and a support tube for attachment to the test fixture drawbar.

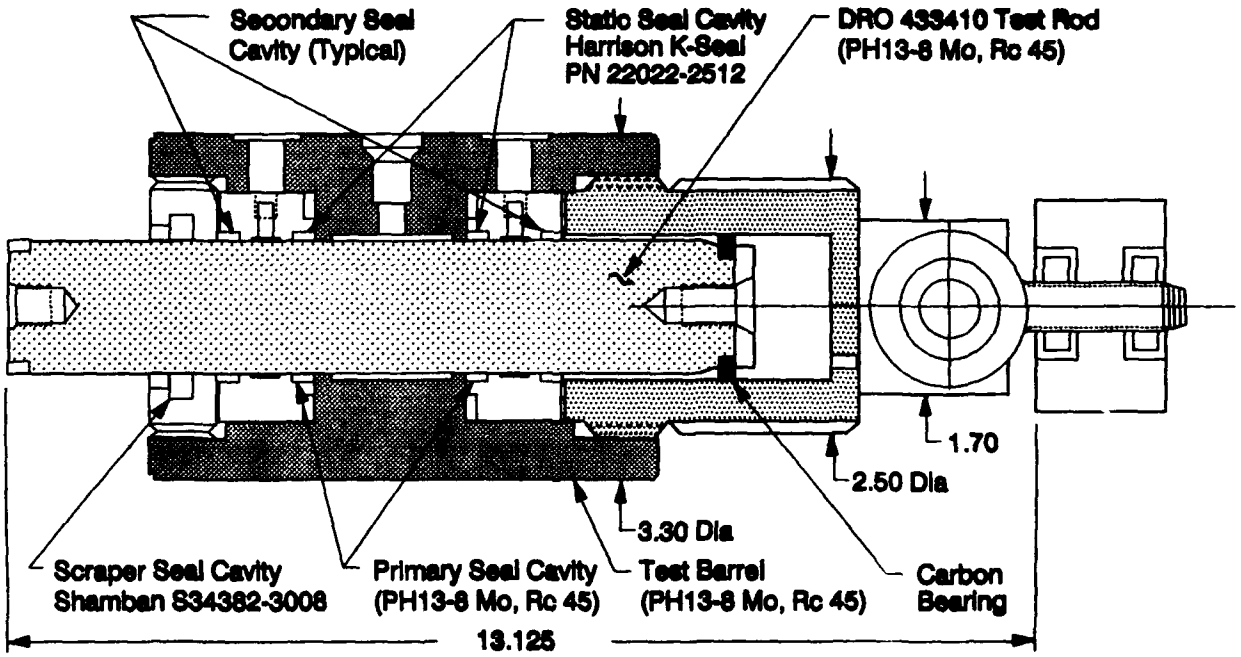

FIGURE 15-CROSS SECTION VIEW OF ROD SEAL TEST MODULE

The main barrel was made with a cavity in each end to install seal glands which were equipped with different seal grooves to adapt the specific seal to the test. In each case, a matched pair of glands was used so that given seal designs could be tested in pairs, as in the case of the revised piston seal test module. A further improvement was made in that the space between the seal glands was greater than the test stroke, so that the dynamic seal surface did not have to pass through both seals.

It was decided to furnish the rod seal module with a carbon bearing at only one end, and allow the other end to sustain side loading as a consequence of the column action of the unit under compression. The support tube provided the internal surface for the bearing.

The nut, retaining the test gland at the end opposite the support, was designed to mount a scraper seal so that it could be evaluated also.

The test rod was intentionally fashioned as a simple shaft with a step and screw thread at one end to attach the bearing, and a female screw thread at the other to connect the rod to the test fixture draw bar. A seal installation chamfer was machined on one end of the rod.

A quantity of four test rods were fabricated: two with some material allowance for experimentation with surface finish preparation techniques, one with an allowance for a surface coating, and one at the proper diameter for testing.

The seal extrusion clearance (between the glands and the rod) was designed to be nominally 0.006 inch as in the case of the piston seal module. In the case of the rod seal, there was no expectation of pressure expansion.

3. TEST RESULTS

During the course of the pre-screen testing, a total of nine piston seal tests were accomplished, and one rod seal test was done. In addition, minor investigations associated with these tests were accomplished in the area of surface finish preparation, fluid preparation, and fabrication and use of PBI plastic and are reported in this section.

3.1 PISTON SEAL TESTS

A general summary of the piston seal tests conducted and the results obtained are given in Appendix H.

Critical dimensions of the test seals and the test module were measured and recorded for conditions before and after the tests. These dimensions are shown in the appropriate appendix as noted in the results for the individual tests.

3.1.1 PISTON SEAL TEST 1

3.1.1.1 SEALS TESTED AND LEAK PERFORMANCE

The first seals to be tested were the Advantec seals and the Krueger Delta seal . The Advanced product seal was used in the two outboard positions to catch the leakage from the primary seals and direct it to the measurement containers.

The Advantec seal consisted of an Inconel 750 radial spring within a proprietary PTFE based jacket. This seal also employed a U-60 Polybenzimidazole (PBI) backup ring with a ramp which provided a radial component to the axial thrust of the main sealing component. In this way, this seal assembly tended to be a hybrid between the radial spring loaded seal type and the axially spring energized seals. The PBI material is a high-temperature (up to 800°F service) engineering plastic propriatary to the Hoechst Chemical Company and manufactured under license by the Celanese Company. This material exhibits a much higher elastic modulus and a higher tensile strength than the PTFE material.

The Krueger seal is an axial spring loaded type of seal with a wedge ring to provide the radial actuation. The seal ring was fabricated from virgin polyimide material.

The Advanced product seals are radial spring loaded seals using a proprietary Ener 8 jacket material and a PBI backup ring on both sides of the seal.

After the critical dimensions were measured and recorded the seals were subjected to a wear-in procedure recommended by the manufacturer (refer to Appendix I for a summary of the pretest and posttest measurements). This procedure consisted of pressurizing the seals to 200 psi at ambient temperature and cycling for 200 cycles. Following this, the test pressure was raised to 5000 psi and an additional 200 cycles applied at ambient temperature.

Following the wear-in procedure, the baseline conditions of 5000 psi and 500°F were applied (refer to the test sequences in Appendix D, page 95). The governing temperature throughout the testing was that measured on the body of the test module. It was found that the ambient temperature required to maintain the test temperature, as measured at the module, was up to 200°F less than that measured at the module. This was due to the heat buildup caused by friction at the test seals, and varied with the type of seal being tested.

Seal leakage from both primary seals was less than one drop in 45 cycles for each seal during the first 13,500 3-inch cycles, and a 10-minute static leak check at 5000 psi during this time showed less than 0.1 mL per minute leak rate from either seal.

At 13,500 cycles, heavy external leakage was noted at the flanged end of the test barrel. Partial disassembly revealed a heavy buildup of varnish from oxidized fluid deposited on the inside sealing area of the flanged end of the barrel. This was cleaned off and the test was resumed using the same seals.

The test fluid in this case had been deareated in a vacuum prior to use.

During the next portion of testing, from 13,500 to 28,800 cycles, the leakage from each seal decreased to about one drop in 64 cycles. From that point to the end of this sequence of testing (50k 3-inch cycles and 1×10^6 dither cycles at 500°F and 5,000 psi) the leakage from each seal increased to about one drop in 37 cycles.

Following the successful conclusion of the first sequence of testing, the same seals were retained in the module and the test conditions were increased to the next level of 600°F and 5000 psi.

During the first part of the next sequence of testing up to 13,950 cycles, leakage from each seal was approximately one drop every 46 cycles, and then increased to one drop per 26 cycles at 22,500 cycles. As the testing continued through this sequence, the leakage continued to increase to one drop per cycle at 41,400 cycles. At this point, static leakage tests were conducted at several positions along the stroke. At some points along the stroke, the static leakage rate was excessive, and at other points it was within limits. It was decided to continue the test to the end of this test sequence, at which time the leakage from the seals was in excess of the 25 drops per-cycle-limit.

This leakage performance is summarized in Table 3.

TABLE 3 - SEAL LEAKAGE PERFORMANCE FOR FIRST PRESCREEN TEST.

Sequence 1- 500°F and 5,000 psi

Cycles	Leakage per seal *
0-13,500	Less than one drop in 45 cycles
13,500-28,800	One drop in 64 cycles
28,800-50,000	One drop in 37 cycles

Sequence 2- 600°F and 5,000 psi

0-13,950	One drop in 46 cycles
13,950-22,500	One drop in 26 cycles
22,500-41,400	Increased to one drop per cycle
41,400-50,000	Increased to more than 25 drops per cycle

* Based on approximately 25 drops per mL

3.1.1.2 POST TEST OBSERVATIONS AND CONDITIONS

Subsequent to the testing, the test module was removed from the test fixture and disassembled. The critical dimensions, which were measured and recorded prior to the test, were again accomplished and recorded. These are shown in Appendix I.

The outboard seals (leak catcher) were heavily coated with decomposed test fluid, and as shown by the dimensions in Appendix I, had worn or permanently deflected to the point that "squeeze" or interference with the sealing groove and the test barrel no longer existed. The posttest appearance of these seals is shown in Figure 16.

FIGURE 16- APPEARANCE OF ADVANCED PRODUCTS SEAL FOLLOWING FIRST PRESCREEN TEST

The Advantec seal, Figures 17 and 18, was found to have accumulated a black deposit on the dynamic sealing surface. This material appeared to be a combination of wear debris from the adjacent PBI back-up ring and decomposed test fluid. The post measurement showed that wear and permanent set or cold flow had caused a reduction in the annular cross section dimension, but some "squeeze" (approximately 0.003 inch per side) remained. Based on the seal analysis accomplished in an earlier section, this squeeze would not be expected to effect a satisfactory seal.

FIGURE 17- APPEARANCE OF ADVANTEC SEAL FOLLOWING FIRST PRESCREEN TEST

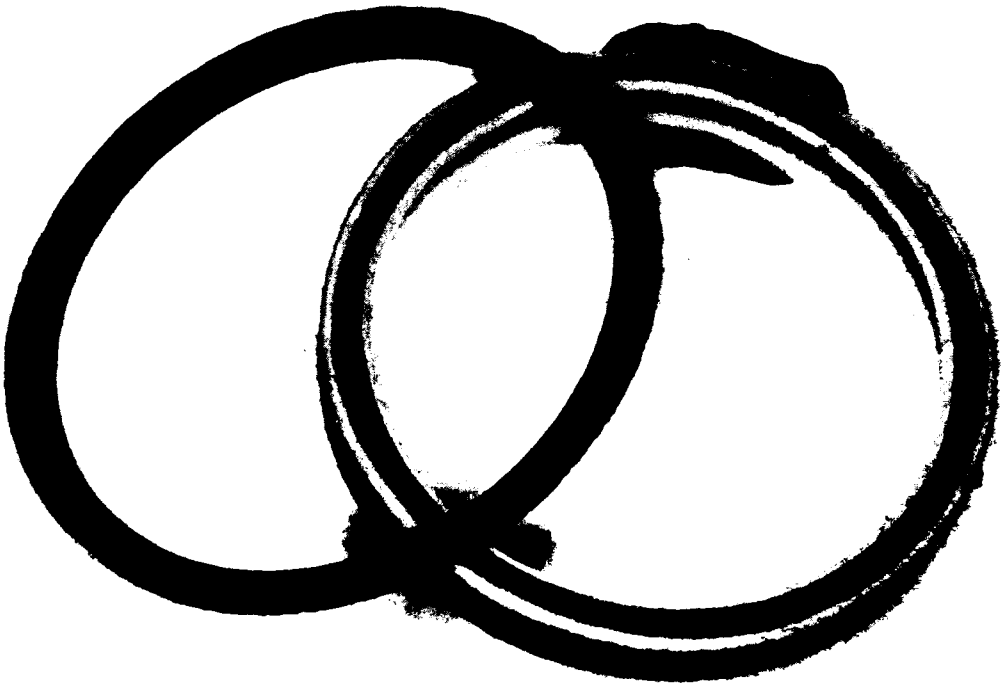

FIGURE 18-ADVANTEC SEAL FOLLOWING FIRST PRESCREEN TEST, SHOWING THE HIGH PRESSURE SIDE AND THE MATING PBI MATERIAL BACKUP RING.

The Krueger Delta seal, Figure 19, was found to have the pressure balancing lands worn away and was reduced about 20 percent in cross section, but appeared to not be heavily damaged.

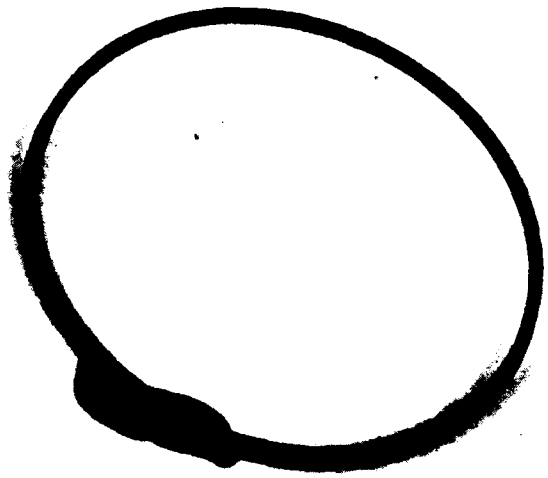

FIGURE 19- KRUEGER DELTA SEAL FOLLOWING FIRST PRESCREEN TEST.

The piston and seal adaptors, as well as the end cap, were undamaged showing only some discoloration due to the temperature and decomposed fluid.

The test cylinder barrel was found with considerable caked-on decomposed fluid, and inside was found to have some slight longitudinal scratches. The posttest measurements indicated virtually no wear on the inside diameter of the barrel. The surface finish at each end of the barrel had deteriorated considerably from Ra=5 microinches before test, to Ra=19 microinches after test at the ends of the barrel, whereas the finish near the center of the barrel improved slightly during the test.

The two carbon bearings used during the test were somewhat covered with decomposed fluid, but showed virtually no wear after cleaning.

3.1.2 PISTON SEAL TEST 2

3.1.2.1 SEALS TESTED AND LEAK PERFORMANCE

The test seals for the second piston seal test were a replacement set of Advantec and Krueger seals identical to the first set. For this second test, however, Advantec seals, identical to the test specimens, were used in the outboard position to retain the leakage fluid from the primary seals, in lieu of the Advanced Products seal used in the first seal test.

The critical dimensions and finishes were measured prior to the test and recorded as in the previous test, and are shown in Aappendix I.

Following the wear-in procedure, the test conditions were applied. Since this same combination of test seals had previously demonstrated good performance at the baseline conditions, (500°F and 5000psi) it was decided to start the second test at the next higher condition of 600°F and 5000psi.

At 36,180 cycles into this first sequence of testing, (approximately 80 percent of the sequence) heavy leakage occured at the Krueger seal leak port. The test was stopped and the test module was removed and disassembled.

The Krueger Delta seal was found to be fractured completely across the section of the seal ring.

The outboard seals were found to be coated with black deposits as shown in Figure 20. This deposit was thought to largely consist of decomposed fluid.

FIGURE 20-APPEARANCE OF ADVANTEC LEAK CATCH SEALS-FIRST SEQUENCE-SECOND PRESCREEN TEST.

The Advantec primary seal was not removed from the piston at this time, but was cleaned in situ. After the decomposed fluid was cleaned from this seal, a considerable amount of darker adherent film remained on the seal. This was very evident on this particular seal, because of the constrast it made with the normally white color of the seal jacket. The Advantec seal that had been used in the first piston seal test was reexamined and found to also bear some of this same deposit.

The cylinder barrel also was found to contain this deposit on the inside diameter, and measurement of the position of the piston in the barrel during stroking showed this deposit to correspond to the location of the Advantec seal. It was postulated that this material was PBI from the Advantec seal backup ring.

This deposit was quite smooth and tightly adherent, proving very difficult to remove by mechanical means. Inquiry was made to the Celanese Company, manufacturer of the PBI material, as to a type of solvent that would remove it. Of the few materials available to attack the PBI, acetic acid (vinegar) was chosen and tried. After an overnight soak, the film on one end of the barrel was almost entirely removed. The deposit at the other end of the barrel was considerably more resistant to removal. It was concluded that under the test conditions, the PBI material was "wetting" the barrel surface as it was wearing off.

Some of the PBI material was then transferring to the surface of the Advantec seal PTFE jacket. It was also considered that the Krueger Delta may have adhered to this film of PBI inside the test barrel, hastening the failure of the Delta seal.

The Harrison K seal, which was being used as the static seal between the end cap and the piston, was discovered to have had its lead coating melted by the test temperature. Some of this lead pooled at the bottom of the module.

The K seal from the first test was examined and found to have experienced the early stages of lead melting. Pictures of both seals are shown in Figure 21.

First test Second test
Harrison p/n 23002 CL 750

FIGURE 21 - K SEALS USED AS STATIC SEALS IN FIRST AND SECOND PRESCREEN TEST

Even though the lead coating had melted from the Harrison K seal, no leakage was detected from these seals.

Following inspection and cleaning, the test module was reassembled, using a new replacement Krueger Delta seal fabricated from the virgin polyimide material, and a new replacement pair of Advantec seals were installed in the leak catching location.

The lead coated Harrison K seal (part number 23002 CL 750) was replaced with a new gold plated K seal (part number 23002 CA 750). Gold plated K seals were used for static seals for all subsequent tests.

Prior the resumption of the testing, the preparation procedure for the test fluid was changed. In addition to removing the dissolved air from the fluid by subjecting it to a vacuum, the fluid was subsequently placed into a high-pressure sample bottle and pressurized with nitrogen gas at approximately 20 atmospheres for an hour, after the gas had been bubbled through the fluid under pressure. The test fluid was then depressurized to about two atmospheres for a time to allow excess nitrogen to boil off, leaving the fluid saturated at one atmosphere with nitrogen gas.

At saturation conditions at one atmosphere, the fluid normally contains approximately 10 percent by volume of air, dissolved intermolecularly. It was thought that the oxygen in this air promotes degradation of the fluid at elevated temperature, and if it could be replaced with an inert gas such as nitrogen, the high-temperature performance of the fluid with respect to decomposition could be improved. Subsequent testing with fluid treated in this manner did, in fact, show this improvement.

After reassembly, the test was continued through the completion of the first sequence of 50k cycles plus 1×10^6 dither cycles at 600°F and 5000 psi.

The test conditions were then increased to the next level, 600°F and 6000 psi, and the second sequence of test cycles was started.

This testing continued until 37,652 cycles (combined with 753,000 dither cycles) of the second test sequence were completed, at which time the test was stopped due to sudden and excessive leakage from the Krueger Delta primary seal.

A summary of the leak performance of the test seals during the second prescreen test is given in Table 4.

TABLE 4- LEAKAGE RESULTS DURING SECOND PRESCREEN TEST

Sequence 1- 600°F and 5,000 psi

Cycles	Seal	Leakage per Seal*
0-1,720:		
	Advantec	9 cycles per drop
	Kreuger Delta	8 cycles per drop
24,624:		
	Advantec	94 cycles per drop
	Krueger Delta	93 cycles per drop
30,000:		
	Krueger Delta	Increased to more than 25 drops per cycle (test stopped at 36,000 cycles)

Sequence 2- 600°F and 6,000 psi

Cycles	Seal	Leakage per Seal*
0-6,182:		
	Advantec	2576 cycles per mL or approx. 103 cycles per drop
	Krueger Delta	132 cycles per mL or approx. 5.3 cycles per drop
6,182-35,330:		
	Advantec	3389 cycles per mL or 136 cycles per drop
	Krueger Delta	260 cycles per mL or 10 cycles per drop
35,330-37,652:		
	Advantec	595 cycles per mL or 23.8 cycles per drop
	Krueger Delta	66.5 cycles per mL or 3 cycles per drop, worsening to >25 drops per cycle

*Based on approximately 25 drops per mL

3.1.2.2 POSTTEST OBSERVATIONS AND CONDITIONS

Figure 22 is a photo of the piston assembly after it was removed from the test fixture and the test barrel was removed.

Less evidence of decomposed fluid was found within the sealing area, although the Advantec leak seals were again found to be coated with a black residue, and appeared to be quite worn. The carbon bearings at the extreme left and right ends of the seal area (referring to the figure) were quite clean and continued to exhibit the fluid distribution grooves machined in the O.D. These bearings were the same ones used in the first prescreen test and were reused for the two sequences of testing in the second prescreen test. Also, the Advantec primary test seal had less black deposit on the surface and some of the original white color of the jacket can be seen. The Krueger Delta seal can also be observed to protrude above the surface of the piston, indicating engagement with the test barrel.

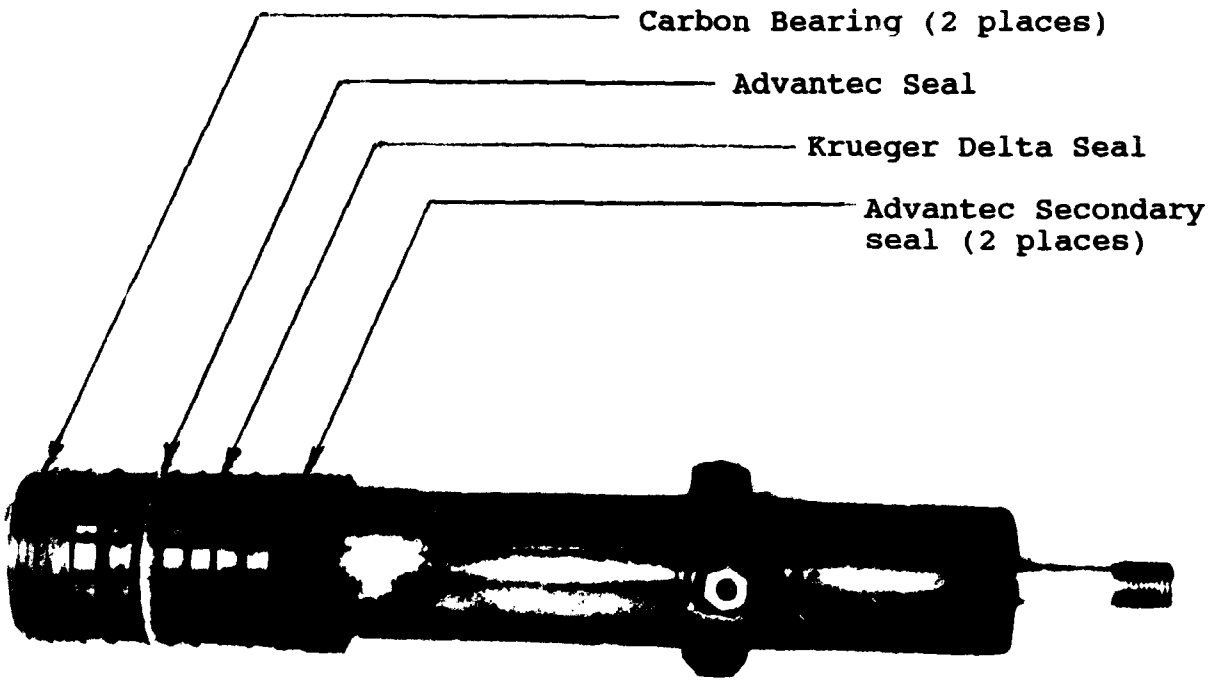

FIGURE 22- PRESCREEN TEST MODULE PISTON SUBASSEMBLY FOLLOWING SECOND PRESCREEN TEST.

The seals and bearings were removed from the piston, cleaned and measured, with the results shown in Appendix I.

The PBI backup ring for the Advantec test seal was found to be cracked through the entire cross section. The post measurement of the main element of this seal indicated that minimal seal squeeze remained at the test conclusion. It appears that this seal type may actually function as a two-stage element, with the backup ring accomplishing a part of the sealing as well as providing the antiextrusion function.

The Krueger Delta seal which had suddenly started leaking heavily was noted to be locally thinned at a location on the inside diameter. Because of the dark color of the seal ring, this feature could not be discerned in a photograph, so it is described in a sketch in Figure 23. This type of seal failure has been observed on other seals on previous occasions and may be described as an eroding away of the seal cross section under high pressure and flow, subsequent to a significant bypassing of fluid. In the case of the present test, significant flow was not available from the intensifier test arrangement so the damage was arrested quickly with the loss of pressure, following the start of the leak.

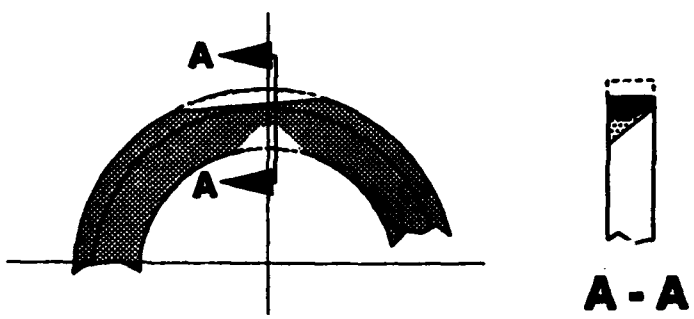

FIGURE 23 - LOCAL REDUCTION IN KRUEGER DELTA SEAL CROSS SECTION CAUSING HEAVY LEAKAGE

Figure 24 is a photograph showing the appearance of the Advantec seal following removal from the test module after the second sequence of the second prescreen test.

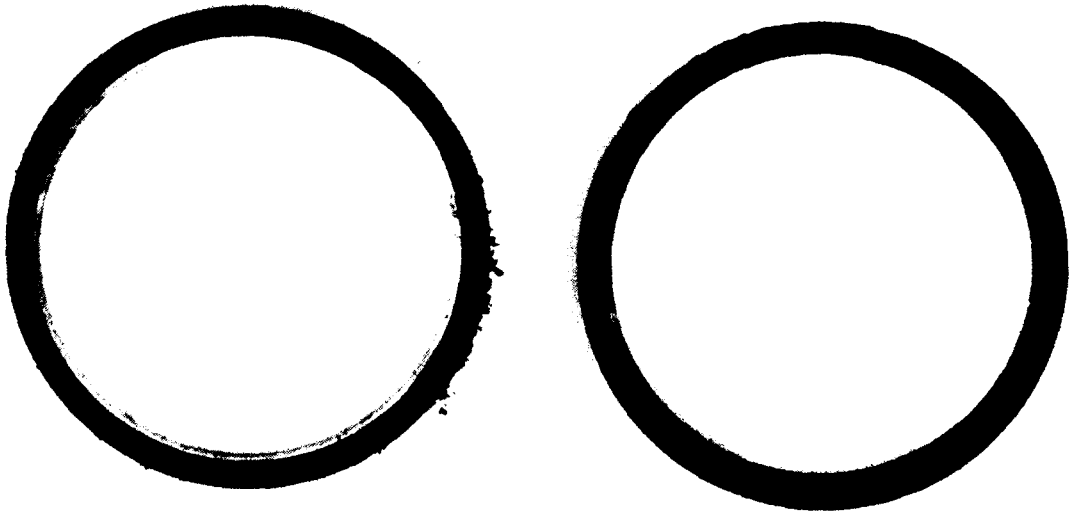

FIGURE 24 APPEARANCE OF ADVANTEC PRIMARY TEST SEAL UPON REMOVAL AFTER SECOND PRESCREEN TEST. THIS SEAL SURVIVED 50K CYCLES AT 600°F AND 5,000 PSI AND 50K CYCLES AT 600°F AND 6,000 PSI

The Advantec seal used in the secondary leak-catching position for the second sequence of the second prescreen test is shown in Figure 25.

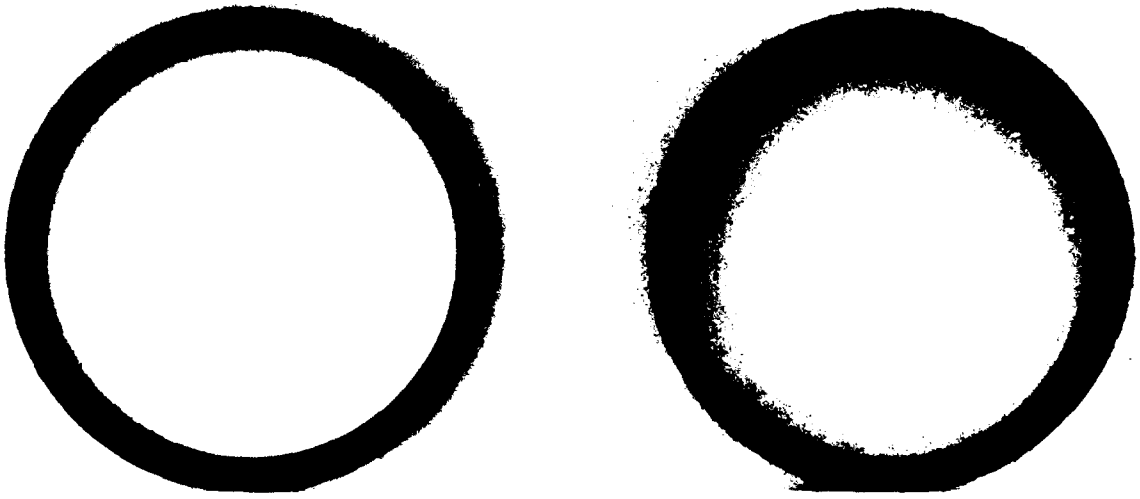

FIGURE 25 ADVANTEC SEAL USED IN THE SECONDARY POSITION DURING THE SECOND SEQUENCE OF THE SECOND PRESCREEN TEST.

The carbon bearings used throughout the first two prescreen tests are shown in Figure 26 after removal from the test module between the first and second sequences of the second prescreen test. At this point in the testing, these bearings had experienced 127,000 3-inch stroke cycles combined with 2.57-million dither cycles. The bearings were not photographed following the last sequence of the second prescreen test, but they were found to be in essentially the same condition as shown in the figure.

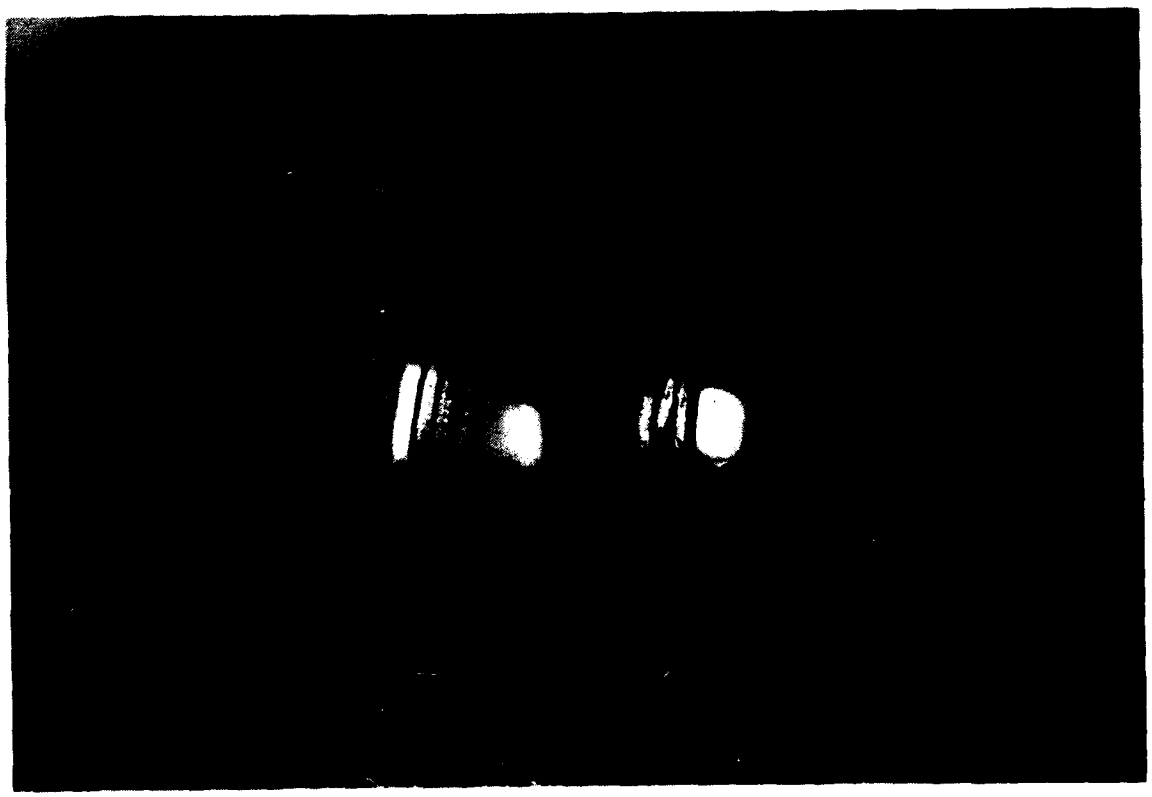

FIGURE 26 APPEARANCE OF THE CARBON BEARINGS REMOVED FROM THE TEST MODULE BETWEEN THE FIRST AND SECOND SEQUENCES OF THE SECOND PRESCREEN TESTS.

3.1.3 PISTON SEAL TEST 3A

The third test was actually conducted in two parts: 3A and 3B.

3.1.3.1 SEALS TESTED AND LEAK PERFORMANCE

The seals tested in the third prescreen test were the Advantec seal and the Krueger Delta seal.

A new replacement Advantec part number MSE 20-500601 seal assembly was used in the standard seal groove in identical manner as in the previous tests.

The Krueger Delta seal used in the first part of the third test was different in that the sealing ring was fabricated from PBI material.

It was during this time that the dimensional instability of the PBI material with respect to moisture content was discovered. The first test seals fabricated from this material were found to be approximately 0.010 inch oversize on the 1.742 inch diameter at the time of installation from having absorbed moisture from the air. It was learned that the material is required to be heated to approximately 300°F for 1 hour to drive off absorbed moisture. Parts which have a large surface area to volume ratio, such as this thin ring (the Krueger Delta seal), are more prone to this problem. For the test, parts machined from the PBI were first heated to drive off the moisture and then machined to size. The finished parts were then sealed in a moisture proof bag and not removed until immediately before installation.

New Advantec seals were used for the outboard leak catcher positions and a different barrel (serial number 002) was used for this test. Dimensions of the seals and the barrel are shown in Appendix I. After the seals were installed, the wear-in procedure was accomplished and following the wear-in procedure the seals were subjected to a low-temperature leakage test.

The test chamber was cooled with liquid nitrogen so that the test module was maintained at -65°F for 5 hours at zero test pressure. Following the cold soak, the pressure was increased to 150 psi and test cycling started. The test cycling was continued at this pressure until the module warmed to 70°F, and leakage was monitored. It appeared that neither seal leaked a measurable amount during this time.

Following the cold-test, the test conditions of 600°F and 6,000 psi were applied while test cycles were applied and testing began.

At 24,028 cycles, the hot testing was interrupted for a repeat of the cold-temperature leak test described above. Again no measurable leakage was encountered during the cold-temperature test.

The high-temperature portion of the testing was resumed. During the high-temperature testing, the leakage from the Krueger Delta seal started at about 6 cycles per drop to 2.4 cycles per drop. While this leak rate did not exceed the requirements of maximum of 25 drops per cycle, the total accumulated leakage of 500 mL was exceeded by the time 38,754 cycles were accomplished, and the test was stopped.

The test module was removed from the test fixture and disassembled for evaluation.

The leakage data is summarized in Table 5.

TABLE 5 - LEAKAGE PERFORMANCE FOR TEST 3A

1. -65°F Cold test leakage (either seal)

   start of test.....Nil
   at 24,028 cycles.....Nil

2. 600°F, 6,000 psi test results

   Krueger Delta seal:

   6 cycles per drop at start.
   2.4 cycles per drop at 38,754 cycles

   Advantec seal:

   100 cycles per drop throughout test.

3.1.3.2 POSTTEST OBSERVATIONS AND CONDITIONS

When the seal module was removed from the test fixture, and the test barrel removed, it was discovered that the carbon bearing on the dither end of the module had broken into three major pieces. Prior to removing the module from the test fixture, measurements were made which indicated that the module was approximately 0.2 degree out of alignment within the test fixture. This would side load the barrel and could have contributed to the failure of the carbon bearing.

The Advantec seal was inspected and found to be in excellent condition, with a small band of dark material or color around the seal within the contact area.

The Krueger Delta seal also appeared to be in excellent condition. It was observed that carbon particles had gathered in the groove of the Delta seal and seemed to block the wedge loading ring from continued compression of the seal ring. This is thought to have been a contributing factor to the higher than normal leakage from this seal. It was somewhat unclear how the PBI material would perform in this application.

The seals and bearings were removed from the test module and measured with the results as recorded in Appendix I.

3.1.4 PISTON SEAL TEST 3B

3.1.4.1 SEALS TESTED AND LEAK PERFORMANCE

The Advantec seal used on Test 3A (previously subjected to 38,754 test cycles at 600°F and 6,000 psi) was retained in the test fixture for continued use in this test.

A new set of carbon bearings were fabricated and installed, and a new set of Advantec seals was installed in the outboard positions for leak catchers.

A Krueger Delta seal, fabricated from Melden 2021 (an improved polyamide) was used as the other primary test seal.

The barrel used in the previous (Serial Number 002) was installed, and the test module was placed in the test fixture for testing.

A cold temperature test at -65°F was conducted in the same manner as before with the leakage results as shown in Table 4.

The stroking tests were begun, but leakage from both seals was in excess of the allowable criteria. Approximately 2000 cycles were applied in the course of the wear-in and warm-up from the cold-temperature test and the attempted high temperature cycling.

At this point, static leakage tests were accomplished at various positions of piston stroke and the results were mixed in that the seals leaked in some positions and not in other positions. It was decided to discontinue the test at this point.

TABLE 6- LEAKAGE FROM SEALS DURING 3B COLD TEST

Advantec seal: Leaked 23 mL during test.

Krueger Delta seal: (Melden material) no leak.

3.1.4.2 POSTTEST OBSERVATIONS AND CONDITIONS

The Advantec seal, when removed from the test, was found to have a small chip missing from the backup ring, and corresponding local damage to the seal jacket in the form of a small hole in the jacket.

The cylinder barrel (Serial Number 002) was found to have some longitudinal scratches in the bore.

The Krueger Delta seal (Meldin material) did not appear significantly worn, but appeared somewhat scratched on the sealing surface, possibly due to scratches in the cylinder barrel.

3.1.5 PISTON SEAL TEST 4

3.1.5.1 SEALS TESTED AND LEAK PERFORMANCE

An adaptor was installed into the test fixture so that two of the special piston ring grooves, which were made for the Cook Airtomic seals, were available for test.

The all metal Cook Airtomic seals were measured prior to testing, (see Appendix I for dimensions) and then installed into the module. A new barrel was used for this test (Serial Number 003). During the first attempt to install the barrel onto the piston and the seal rings, one of the metal piston rings was damaged as it caught on the entry chamfer in the end of the barrel. This seal was replaced and with extra care, the barrel was installed on the second attempt.

New Advantec seals were used in the outboard position and the resulting assembly subjected to the cold-temperature leak test. Each seal leaked approximately 40 mL fluid during this test. Approximately 3000 cycles were applied to the seals in the course of the cold test and attempts to pressurize the seals for the 600°F cycling tests. Leakage from these seals was too great to allow the test pressure to be developed using the low-flow-rate pressurizing system, so further testing was declined.

3.1.5.2 POSTTEST OBSERVATIONS AND CONDITIONS

When the test module was disassembled, one of the carbon bearings was found cracked.

The dynamic sealing surfaces of the Cook Airtomic piston rings were found scratched and scored in the direction of stroking. Similar markings were found in the inside of the test barrel. It was determined that the piston rings, which are made from stainless steel 440 C, were heat treated to Rc=35, which is 10 points softer than the barrel.

One of the test seals is shown in Figure 27.

The posttest measurements are shown in Appendix I.

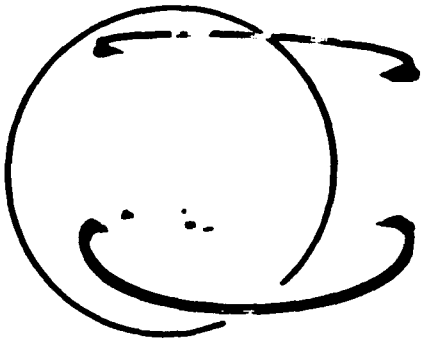

FIGURE 27-APPEARANCE OF COOK AIRTOMIC SEAL FOLLOWING TEST

3.1.6 PISTON SEAL TEST 5

3.1.6.1 SEALS TESTED AND LEAKAGE PERFORMANCE

Prior to this test, the revised test module (shown in Figure 14) was placed into service. Critical measurements of important dimensions and surface finishes are shown in Appendix I. Also the cylinder barrel used in this test was Serial Number 004.

The primary seals in both locations were Advanced Products radial spring loaded type with sealing jacket and backup rings fabricated from the virgin PBI U-60 material. As noted previously, the backup ring configuration was unusual in that they were vented by means of holes through the center of the section. Also, a backup ring was used both in the upstream (high pressure) and the downstream (low pressure) position.

Considerable difficulty was experienced in obtaining the correct fit of the jacket into the barrel, due to the dimensional changes in the PBI material with variation in moisture content. The seals had to be remade three times before the proper dimensions were achieved. Again, it was found that this material would increase in dimensions on the order of 0.010 inch in a 1.742 inches basic diameter. While this may not seem to be a very large change, the stiffness of this material precluded elastic deformation upon installation as would be the case with lower modulus material.

The carbon bearings used in previous testing were replaced with dimensionally identical units made from PBI material. The design of these bearings included a 45-degree joint cut which allowed the bearing to adjust for variations in diameter. No difficulty was experienced in installing the PBI bearings.

The secondary seals for this test were the same type Advantec seals used in previous tests.

The test seals were worn-in to the barrel during approximately 300 low-pressure cycles, according to the manufactures recommendations.

During the wear-in procedure, it was noted that these seals generated considerably more heating due to friction than previous seals.
Following the initial procedure, a low-temperature cold soak and leak test were conducted.

The leak-test performance of the seals appeared good following the cold soak in that the seals leaked an average of 1 mL each during the test.

During the warmup prior to the 600°F 6000 psi stroking test, at about 300°F and 736 cycles, heavy leakage was experienced from the primary seals. As this leak was greater in volume than the test system could produce, the test was stopped, and the test module removed and disassembled.

3.1.6.2 POSTTEST OBSERVATIONS AND CONDITIONS

The (Serial Number 004) test barrel was removed and it was discovered that the Advanced Products primary seal was cracked around the circumference of the outer portion of the PBI jacket. No scoring or surface finish damage was found in the barrel.

It was thought that perhaps thermal stresses induced during the cold soak may have caused the seal failure, so the above test was repeated (except for the cold soak) with a new set of replacement seals. At about 300 cycles into the warmup, the primary seals failed in a similar manner as the first set.

3.1.7 PISTON SEAL TEST 6

3.1.7.1 SEALS TESTED AND LEAK PERFORMANCE

The primary seals for Test 6 were split piston rings supplied by W.S. Shamban Co. The individual rings were identified as part number S37906, while the assembly is identified as S37906. This seal assembly was unusual in that the seal actually consisted of six loose parts as shown in Figure 28. The sealing elements were four 180° (half circumference) ring segments used in pairs to form the split rings. An inner ring to seal in the radial direction (which was split at one location) was also provided. All these parts were made from the PBI U-60 material. In addition, a metal wave spring was furnished to go inside the inner sealing ring. The wave spring was formed with a small tab intended to index all the other parts so that none of the joint gaps would align to form an unrestricted leak path.

Early pressure-leak checks performed on these seals disclosed sufficiently severe leakage to prevent any pressurization of the test seals with the test equipment.

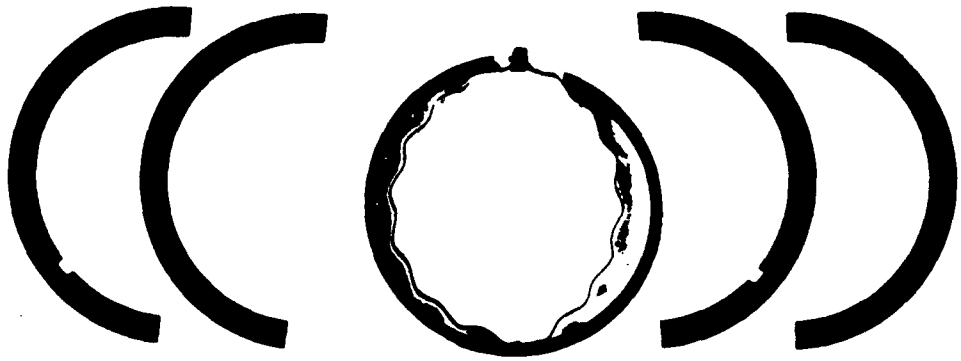

FIGURE 28-SHAMBAN S37905 PISTON RING ASSEMBLY

3.1.7.2 POSTTEST OBSERVATIONS AND CONDITIONS

Inspection of the seals and test hardware following the failed leak check disclosed no damage or change. It was concluded that the design of the seals was such that it allowed an excessive leak path to exist.

3.1.8 PISTON SEAL TEST 7

3.1.8.1 SEALS TESTED AND LEAK PERFORMANCE

The next set of seals, provided by Furon, was a type of split piston ring in which the main sealing element is a ring made from the PBI material, and which uses a single proprietary overlapping joint known as the Permaseal joint. This seal also used two scarf-cut single-turn backup rings made from the PBI material, and an inner energizer spring made from stainless steel. A photograph of this seal type is shown in Figure 29.

Test results from this seal were the same as the preceding seal in that sufficient fluid-flow-rate could not be developed to create a seal.

3.1.8.2 POSTTEST OBSERVATIONS AND CONDITIONS

No change in the seals or hardware occurred during the evaluation.

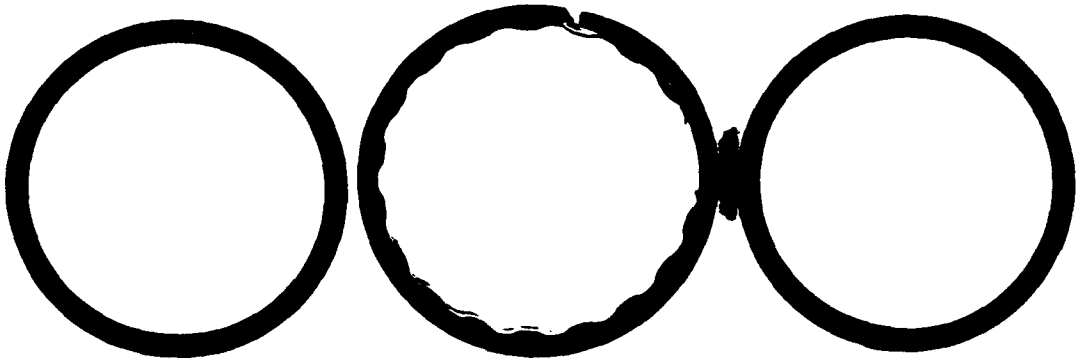

FIGURE 29 - FURON SPLIT PISTON RING ASSEMBLY
PART NO. 60706-01048

3.1.9 PISTON SEAL TEST 8

3.1.9.1 SEALS TESTED AND LEAK PERFORMANCE

This investigation was a retest of the Krueger Delta seal made from the Meldin (improved polyimide) material. The secondary seals were Advantec seals of the type previously used.

A cold soak and leak test were performed with the result that the seals averaged about 1.5 mL leakage during the test.

The hot test was performed at 600°F and 6000 psi and was continued until 11,412 cycles were accomplished, at which time one of the secondary seals started to leak. The test was stopped, and the test module was removed and disassembled sufficiently to remove the Advantec secondary seals. The Advantec seal on the piston end of the module was found to be nearly worn through to the spring as shown in Figure 30. Both Advantec secondary seals were replaced and the test continued.

FIGURE 30-ADVANTEC SECONDARY SEALS FOLLOWING USE IN TEST 8

At 36,412 cycles, the testing was discontinued due to failure of one of the primary seals as indicated by leakage.

A summary of the leakage data for this test is shown in Table 7.

TABLE 7 - LEAKAGE SUMMARY FOR TEST 8-KRUEGER DELTA SEALS.

Cycles	Leakage per seal
0-5,000	average of 116 cycles per mL or 5 cycles per drop
5,000-10,000	125 cycles per mL for seal nearest gearmotor
	116 cycles per mL for seal nearest dither motor
10,000 -20,000	273 cycles per mL for seal nearest gearmotor
	409 cycles per mL for seal nearest dither motor
20,000-30,000	500 cycles per mL for seal nearest gearmotor
	409 cycles per mL for seal nearest dither motor
30,000-36,000	209 cycles per mL for seal nearest gearmotor
	252 cycles per mL for seal nearest dither motor

3.1.9.2 POSTTEST OBSERVATIONS AND CONDITIONS

Upon disassembly, the Krueger Delta seal, primary seal nearest the dither assembly, was found to be eroded or worn on the inside diameter in a manner similar to that reported for Piston Seal Test Number 2 and shown in Figure 23. The outside diameter of both Krueger Delta seals were found to be worn to the point that the pressure balance land was almost worn off. The inside of the cylinder barrel showed no scratches or marks and appeared somewhat more polished than at the start of the test.

Measurement details for this test are shown in Appendix I.

3.1.10. PISTON SEAL TEST 9

3.1.10.1 SEALS TESTED AND LEAK PERFORMANCE

This test was a repeat of Test 5. The primary test seals were the Advanced Products seals made from the PBI material as in the previous Test 5.

It was again required to shrink the seals to size by heating, but in this case, a closer fit was obtained prior to installation.

These seals failed prior to reaching the test pressure or temperature.

3.1.10.2 POSTTEST OBSERVATIONS AND CONDITIONS

One of the test seals had cracked around the circumference of the jacket, and a portion had broken away.

Inspection of the test barrel (Serial Number 004) indicated no damage.

3.2 ROD SEAL TEST

3.2.1 SEALS TESTED AND LEAK PERFORMANCE

Tests were conducted on a single type of rod seal, the Shamban part number S37573. This seal is of the axially loaded or energized type, utilizing a wedge ring element to provide inward radial compression against the rod. In this way the design is similar to the Krueger Delta as both designs use a tapered ring to produce radial deflection and thus sealing force for the dynamic interface, and at the same time, the axial loading springs provide the loading force for the static seal interface on the vertical side of the sealing groove. The Shamban seal differs from the Krueger seal in that the axial spring is in the form of a wave spring while the Krueger seal uses a series of helical springs.

The Shamban seal consists of the stainless steel wave springs, the metal load ring, a high-modulus plastic seal ring, and a PBI anti-extrusion/seal ring. This seal design installs into the standard MIL-G-5514F-218 seal groove. A photograph of one of these seal assemblies is shown on Figure 31.

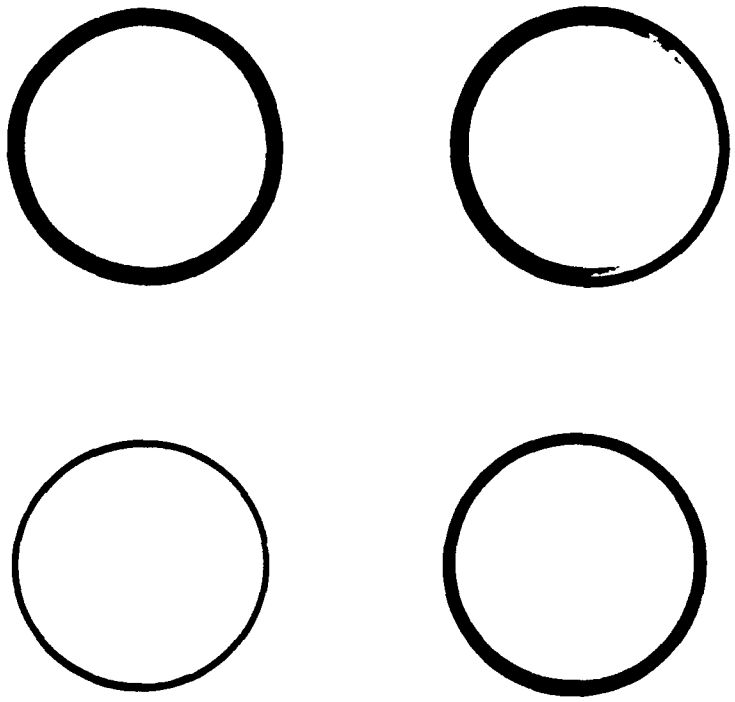

FIGURE 31-SHAMBAN S37573 SEAL ASSEMBLY

The rod seal test module is shown in Figure 15. A significant difference between this test module and the piston seal test module is that the piston seal modules utilized two support bearings, while the test rod in the rod seal module was supported at only one end by means of a carbon bearing. Support at the other end of the module depended on the tribology (sliding charateristics) between the sealing surface of the rod and the seal containment gland which had been plated to a thickness of 0.0008 inch with electroless nickel. This was done to evaluate the ability of the fluid lubricated metal-to-metal interface to carry the side loads generated by the column action of the module which was supported at the bearing end by means of a free swiveling universal joint. Both the seal glands and the test rods were made from PH13-8 Mo corrosion resistant steel, hardened to Rc=45.

Two unsuccessful attempts were made to test the rod seals. In both cases, the test rod was scratched and damaged from contact with the seal retainer gland. This in turn damaged the test seals causing them to leak. It was concluded that a support bearing would be required at each seal gland for any type of seal to operate, and that this was not a representative test of the ability of the seal to perform.

4. STATIC SEAL PERFORMANCE

4.1 HARRISON K SEALS

The Harrison K seals were used as shown in Figures 13, 14, and 15, to seal the joints in the split glands in the test modules. In addition, these seals were used to seal the high-pressure port connections on the piston seal test modules.

In most cases, special care in the form of lapping was applied to the sealing surfaces, and no leakage occurred at any of these connections. The surface preparation was accomplished because it was originally thought that the K seals were an adjunct to the test effort, rather than a test object in themselves.

When the revised piston test module was prepared for testing, the static seal locations were leak tested by placing elastomeric o-rings in the test grooves and subjecting the assembly to static leak checks. It was then found that the machined surfaces for the K seals were inadequate for sealing (refer to Appendix I) . These surfaces were then prepared for use by lapping with abrasive paper and lubricant. No further leakage then occurred.

4.2 ROSAN RF5000 SERIES PORT ADAPTER

The Rosan adapter was used on the pressure port of the rod seal test module. According to the recommendation of the manufacturer, the fitting was used without an elastomeric o-ring. While the test experience was limited, no leakage was occasioned from this connection.

5. PREPARATION OF SEALING SURFACES

Previous experience with development of sealing systems had suggested that surface topography would be a major factor in the success of this program. This fact is underscored by the observations cited earlier from References 2 and 3, concerning the surface characteristics and the effect on actual surface contact stress as related to apparent stress.

For the piston seal tests, it was decided to focus on 2 of the more than 2-dozen surface characteristic parameters, namely average roughness (Ra) and peak count (Pc). Also, it was decided to limit the control of these parameters by specifying the required level, and suggesting a process to obtain these values. Appendix J is a copy of the instructions given for the preparation of the sealing surfaces in the cylinder barrels.

Reference 9 explains all of the surface finish parameters, but for convenience, the definitions of Ra and Pc are repeated here.

Within a given surface profile, there can be chosen a mean hypothetical surface plane. The average surface roughness value then is the arithmetic average of the absolute distances of all profile points from the mean plane.

The Pc parameter is a measure of the frequency and magnitude of the penetration of the surface profile through a hypothetical height band placed symmetrically around the mean surface plane. This parameter then gives a perspective of the randomness and extreme values of the surface profile in question.

Another important consideration for the surface finish with respect to leakage is the "lay" or direction of the tool marks. Both the test cylinders and the test rods would be manufactured by a turning process, which would automatically provide a circumferential orientation to the surface finish. This orientation, transverse to the potential leakage flow would theoretically allow the least leakage.

The results from the piston seal testing indicated that further investigation of the surface finish, how it is established and the relationship to sealing performance would be profitable. For this reason, the piston rods were specified to be delivered in a partially finished condition, with the intent of monitoring the process used to establish the final finish and documenting the same.

Ultimately, the scope of the program as revised did not permit a large amount of experimentation and documentation in the area of surface finish processes, but some of the finish techniques and resulting documentation are shown in Appendix K.

6. CONCLUSIONS AND RECOMMENDATIONS

6.1 CONCLUSIONS

Based on the analysis, design and test experience obtained in this program, the following conclusions are drawn:

1. Hydraulic systems which operate at significantly higher temperature than presently used are feasible in the near future.
   It appears that the present operating conditions of 550°F and 3000 psi, used on current advanced aircraft, could be made routine by use of the materials and techniques investigated by this project.
   Indications are that a hydraulic system temperature of 600°F and a system operating pressure of 6000 psi is workable with refinement of present knowledge in the direction indicated by the program results.

2. The development of a suitable high-temperature hydraulic fluid is a significant pacing item for future implementation of hydraulic systems which operate with fluid temperature exceeding 500°F.

3. More research is needed to develop nonmetallic sealing materials; in particular, improvements in high-performance, high temperature-plastics.

4. Additional investigative work is needed to update the understanding of both the static and dynamic sealing interfaces. This would include study of the surface topography parameters and developing quantitative relationships between these parameters and other sealing parameters such as contact force. It would also include the tribological effects of fluids and solids at the dynamic interfaces.

5. The various available seal design concepts suggest that the seal manufacturers are very up to date in understanding the high-temperature/high-pressure sealing requirements. Several seals meeting many requirements for high temperature and high pressure are in production and available for sale.

6. It is presently advisable to design actuators for high temperature operation using non metallic bearing material to maintain concentricity and protect the dynamic interface (i.e., rod and seal gland) from metal-to-metal contact.

7. Fluid performance with respect to oxidation and decomposition at high temperature can be significantly improved by substituting an inert gas such as nitrogen for the dissolved air in the fluid.

6.2 RECOMMENDATIONS

Research and development should be continued to advance high-temperature, high-pressure hydraulic system technology.

It is recommended that three steps should be taken:

a. Continue the effort started in the present program to the point of fabricating and testing a rod seal fixture with a support bearing at each end. Continue testing to the point of demonstrating an actuator with dual rod seals. The effort should include demonstrating the actuator through 500K long-stroke, full-pressure cycles at 600°F and 6000 psi.

b. Using the best empirical data and design technology, assemble a very brief high-temperature hydraulic system demonstrator. A minimum list of equipment would include the pump, distribution tubing and fittings, reservoir, control valve and actuator. This system should be operated and demonstrated for a minimum of 200 hours.

c. Conduct basic research into the critical enabling technologys which were previously noted to be pacing items. This shoud be done in parallel with the items listed in statement b. above.

This research would include the following:

1. Develop suitable hydraulic fluids for extended time use at temperatures up to 700°F. This could be started by exploring the temperature limits for MIL-H-27601 fluid when saturated with nitrogen gas as was done during the present program. When prospective fluids become available, they should be tested in the demonstrator described above.

2. Continue to investigate high-temperature plastics for sealing applications.

3. Conduct further investigative work to improve the understanding of the mechanism of sealing interfaces, including quantitative relationships between surface topography characteristics and sealing parameters. Study boundary lubrication phenomena related to the dynamic sealing interface.

4. As the relationships between sealing parameters and surface topography become better understood and the topographical parameters can be defined, investigate and document processes which will economically produce the specified surface finish parameters.

REFERENCES

1. AIR 1077 Metallic Seal Rings For High Temperature Reciprocating Hydraulic Service - Society of Automotive Engineers.

2. Technical Report AFRPL-TR-65-61 - Bauer, Glickman, Iwatsuki- Analytical Techniques For The Design of Seals For Use in Rocket Propulsion Systems - IIT Research Institute.

3. Technical Report AFRPL-TR-65-153 - Bauer - Investigation of Leakage And Sealing Parameters -IIT Research Institute.

4. D. Tabor - The Hardness of Metals - Oxford University Press, 1951.

5. Hicks - Standard Handbook of Engineering Calculations - McGraw Hill, 1972.

6. Product Data Bulletin No. S-24 Armco PH 13-8 Mo Stainless Steel , Armco Inc., Middletown, Ohio.

7. MIL-G-5514F Packings; Installation and Gland Design, General Specifications.

8. ANSI/ASME B46.1-1985 Surface Texture-Roughness, Waviness and Lay, ASME, New York.

9. Amstutz- Surface Texture: The Parameters, Sheffield Instrument Division, Warner & Swasey Company, 1985

10. MIL HANDBOOK 5, Metallic Materials and Elements for Aerospace Vehicle Structures, Dept. of Defense, June 1987.

11. Roark & Young, Formulas for Stress and Strain, Fifth Edition, McGraw-Hill, 1975.

12. Douglas Aircraft Company, Hydraulics Manual, March 1979.

APPENDIX A

PROPOSED SEAL DESIGNS

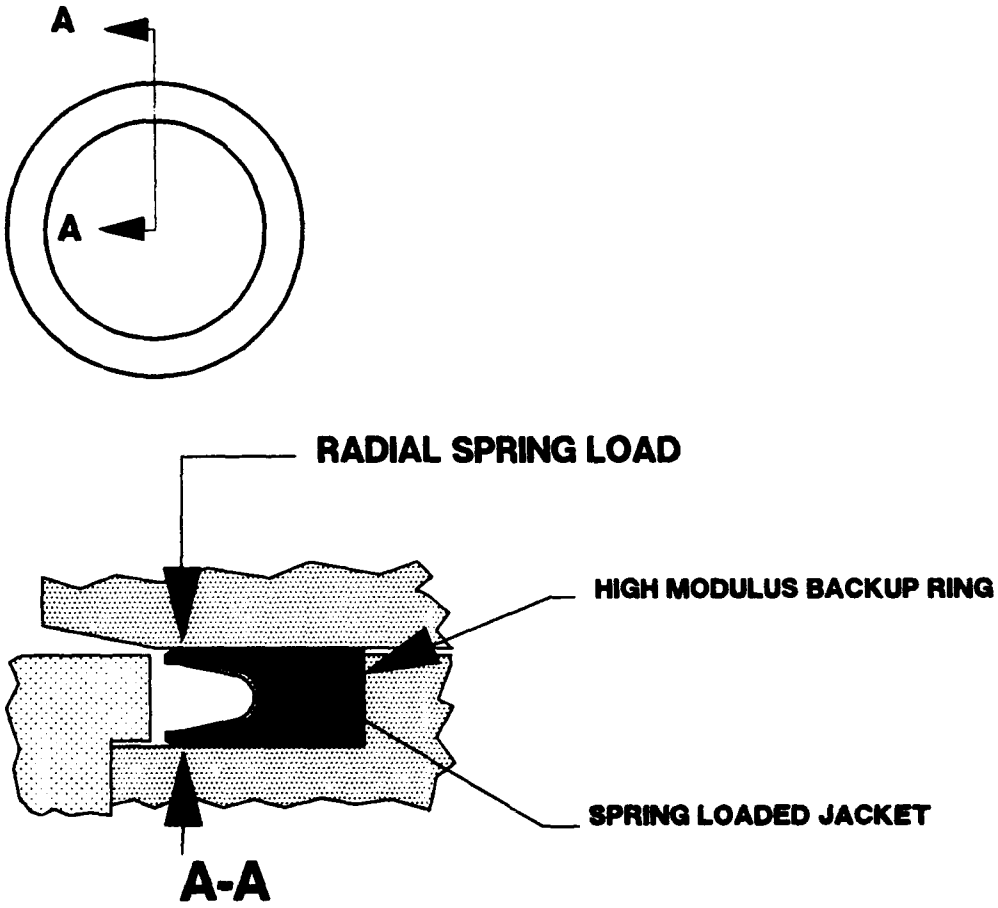

RADIAL

SPRING ENERGIZED POLYMER SEALS

REPRESENTATIVE OF SEALS SUBMITTED BY:

Advanced Products

Furon

Green Tweed / Advantec

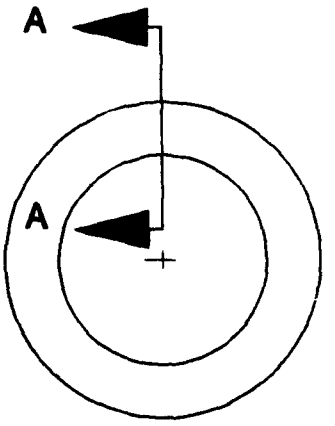

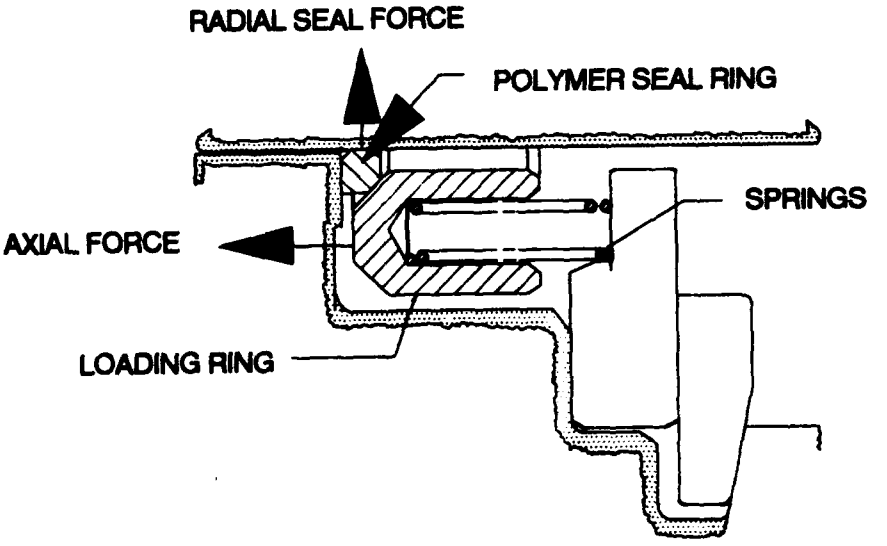

A-A

AXIAL SPRING ENERGIZED SEALS

REPRESENTATIVE OF SEALS SUBMITTED BY:

R.E. Krueger Co.
Shamban

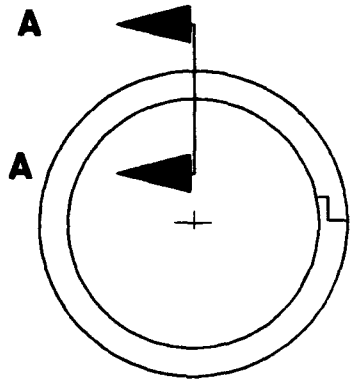

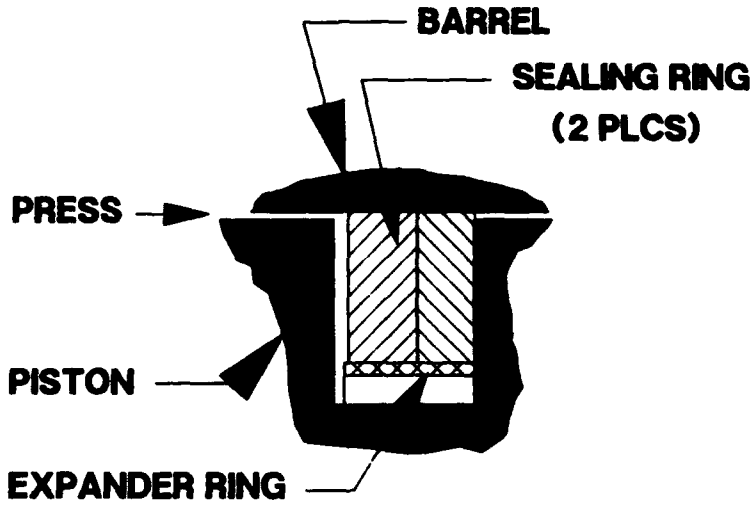

A-A

SPLIT SEALING RINGS

REPRESENTATIVE OF SEALS SUBMITTED BY:

COOK AIRTOMIC

FURON

KAYDON

SHAMBAN

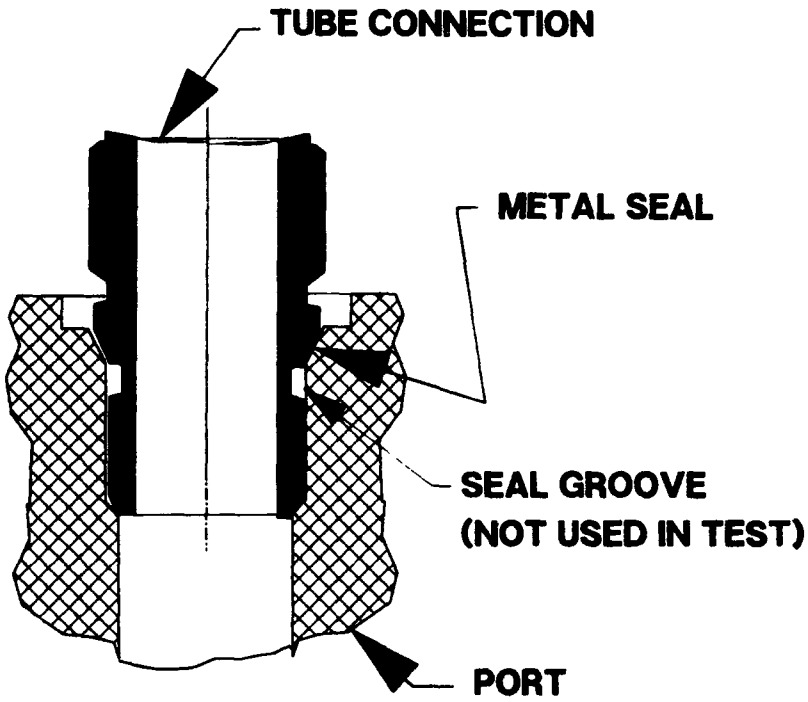

ROSAN ADAPTER

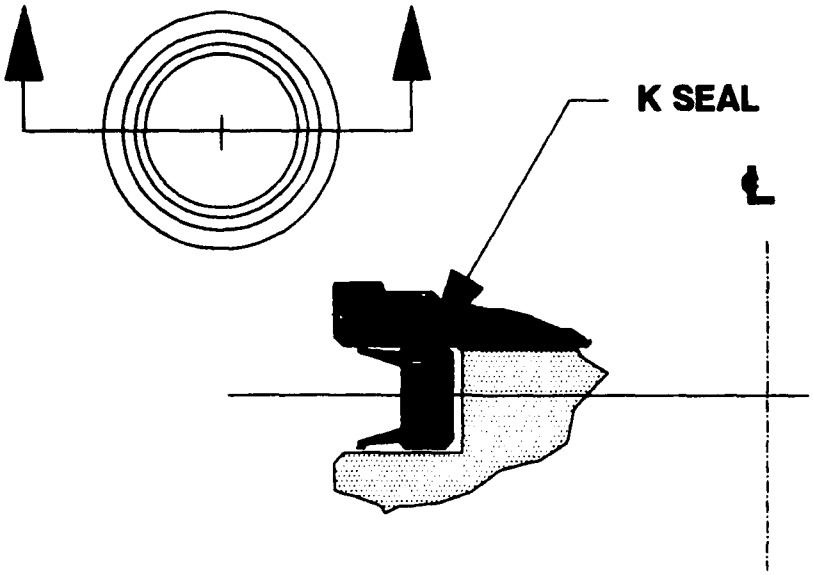

HARRISON K SEAL

STATIC SEALS

APPENDIX B

CALCULATION OF SPRING FORCE AND CONTACT STRESS

FOR

REPRESENTATIVE SPRING ENERGIZED SEAL

ANALYSIS: RADIAL SEAL SPRING PRELOAD AND CONTACT STRESS FOR REPRESENTATIVE SEAL

INSTALLATION:

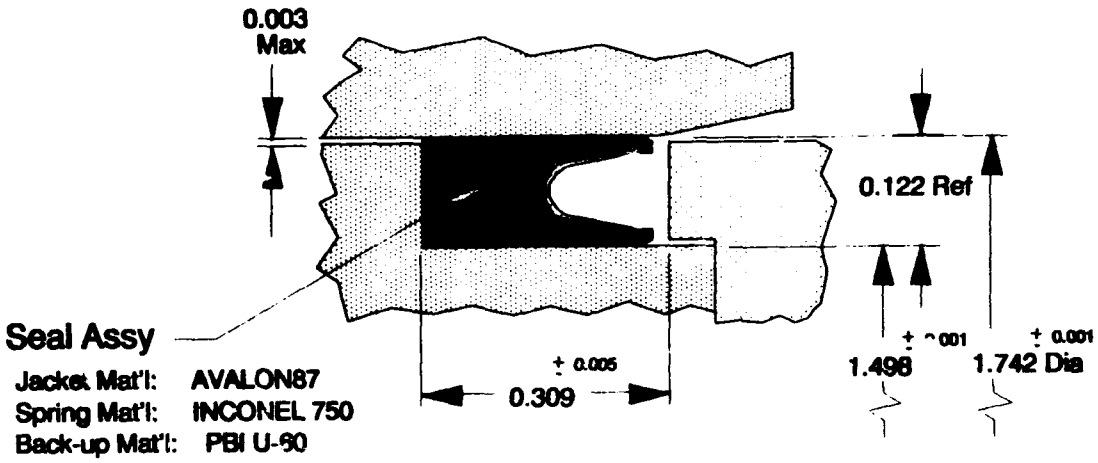

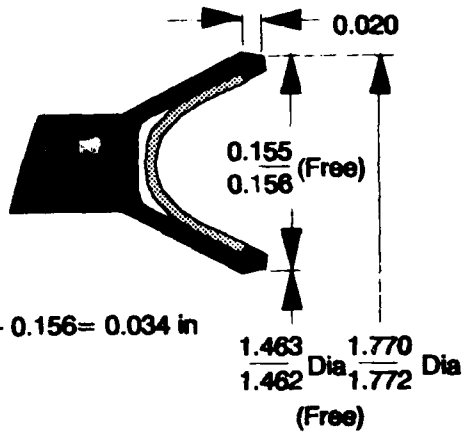

$$\text{Squeeze} = \left[\frac{1.742-1.498}{2}\right] - 0.156 = 0.034 \text{ in}$$

Seal Squeeze = Groove annulus - Seal Annulus

= [(1.742 - 1.498)/2] - 0.156

= <u>0.034 inch</u>

REPRESENTATIVE SPRING ELEMENT:

(Typical 61 places around circumference)

Circumference of Spring = [(spring o.d. - cross section)] x π

= [(1.772 - 0.156)] x π = <u>5.077 in</u>

Spring Material is Inconel 750 ; E = 31 x 10^6 psi

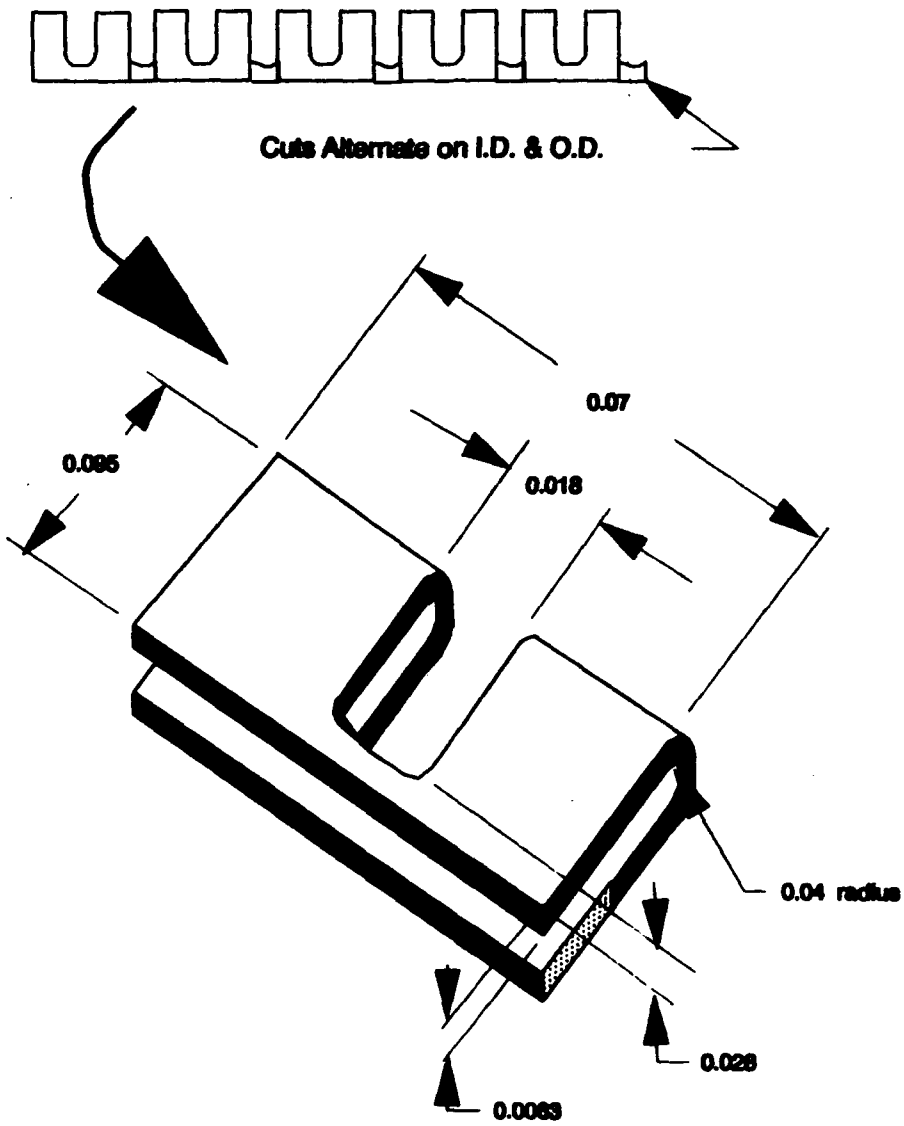

ANALYZE SPRING AS A CURVED BEAM:

(see Reference 5, pages 3-85 and 3-86 for analysis format)

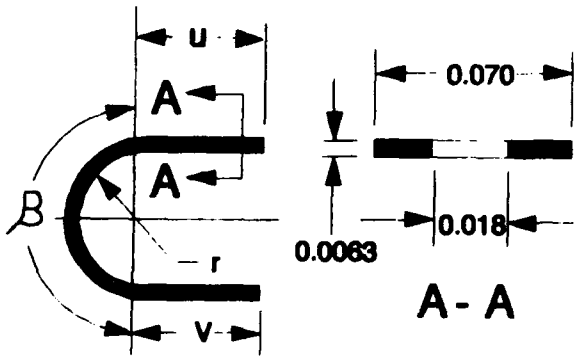

$b = 0.070 - 0.018 = 0.052$

$h = 0.0063$

$I = \frac{1}{12} bh^3$

$I = \frac{1}{12} \times 0.052 \times (0.0063)^3$

$I = 1.084 \times 10^{-9}\ in^4$

$$defl = d = \frac{P}{3EI} [2kr^3 (m + \{\beta/2\})^3 + (v-u)^3]$$

or

$$\frac{P}{d} = \frac{3EI}{[2kr^3 (m + \{\beta/2\})^3 + \{v-u\}^3]}$$

$v = u = 0.095$ inch

$r = 0.04$

$m = u/r = 0.09/0.04 = 2.25$

$\beta = \pi$ radians

$k = 0.55$

so:

$$\frac{P}{d} = \frac{(3)(31 \times 10E6)(1.084 \times 10E-9)}{[(2)(0.55)(0.04)^3(2.25 + \{\pi/2\})^3 + 0\ ]} = 25.67 \text{ lb/in}$$

For 61 spring segments around circumference mutiply by 61:

61 x 25.67 = 1566 llb/in

Multiply by squeeze to obtain load:

0.034 x 1566 = 53.25 lb

Divide by circumference to obtain load per inch of circumference:

53.25#/5.077 inch = 10.48 lb/in

If contact width is 0.02 inch, contact stress is:

$$\sigma = \frac{10.48 \text{ lb/in}}{0.02 \text{ inch}} = 524.38 \text{ psi}$$

APPENDIX C

PROPERTIES OF MIL-H-27601 HYDRAULIC FLUID

PROPERTIES OF MIL-H-27601 FLUID

FLUID DESCRIPTION

The fluid, which is rated for service in the range -40 to 288°C, is a petroleum based high temperature hydraulic fluid made from paraffinic base stock of natural hydrocarbon and contains an oxidation inhibitor and tricresyl phosphate as an antiwear agent.

When furnished by Bray Products Division of Castrol, the fluid is known as Brayco 771. The characteristics of the fluid are as follows:

PROPERTY	MIL-H-27601	Brayco771
Kinematic viscosity (c.s.)		
100°C	3.2 min.	3.2
40°C	-	14.7
-17.8°C	385.0 max.	-
-40°C	4000 max.	3900
Viscosity index	89 min.	95
Pour point	-65°F max.	-
Flash point	182.2°C min.	196°C
Specific gravity	Report	0.85 @ 15.6°C
Specific heat (BTU/lb°F)	0.485 @ 200°F min.	-
Thermal Expansion	0.0006 per °F @ 400°F max.	-
Bulk modulus	200,000 psi min.*	-

* isothermal secant 0 to 10,000 psi @ 100°F

APPENDIX D

PRE-SCREEN TEST PLAN

FLUID, FLUID PREPARATION, AND INTRODUCTION INTO THE TEST

1.0 FLUID-The fluid is MIL-H-27601 (Brayco 771)

2.0 FLUID PREPARATION-Fluid will be deareated and then placed in an evacuated sample bottle. After the fluid is in the sample bottle it will be maintained under vaccuum except when it is transferred, at which time it will be transferred under pressure from a Nitrogen source

3.0 FLUID INTRODUCTION-The fluid will be introduced into an evacuated system, through a valve, by pressurizing the sample bottle to approximately 100 psi with dry Nitrogen.

4.0 DISCUSSION OF METHOD-A Seaton-Wilson air eliminator will be used to manually de-gass the fluid. This unit shown in figure 1 uses a Mercury piston to draw a quantity of fluid down to a vaccuum, which bubbles the air out of the fluid. This unit only processes a small quantity of the fluid at a time, but it permits direct visual observation of the aerated condition of the fluid.

The unit is equipped with a three-way valve at the top of the fluid column so that the fluid to be processed may be admitted into one port, and the removed air vented through the other port. In this manner, samples of the test fluid may be deareated, and then transferred into the sample cylinder for storage. The sample cylinder has a valve at each end, and when the fluid is to be introduced into the test circuit, one valve is connected to the test circuit and the other end is connected to a nitrogen pressure source. Fluid is transferred into the test circuit by opening the valves and using the nitrogen pressure source to push the fluid into the test circuit.

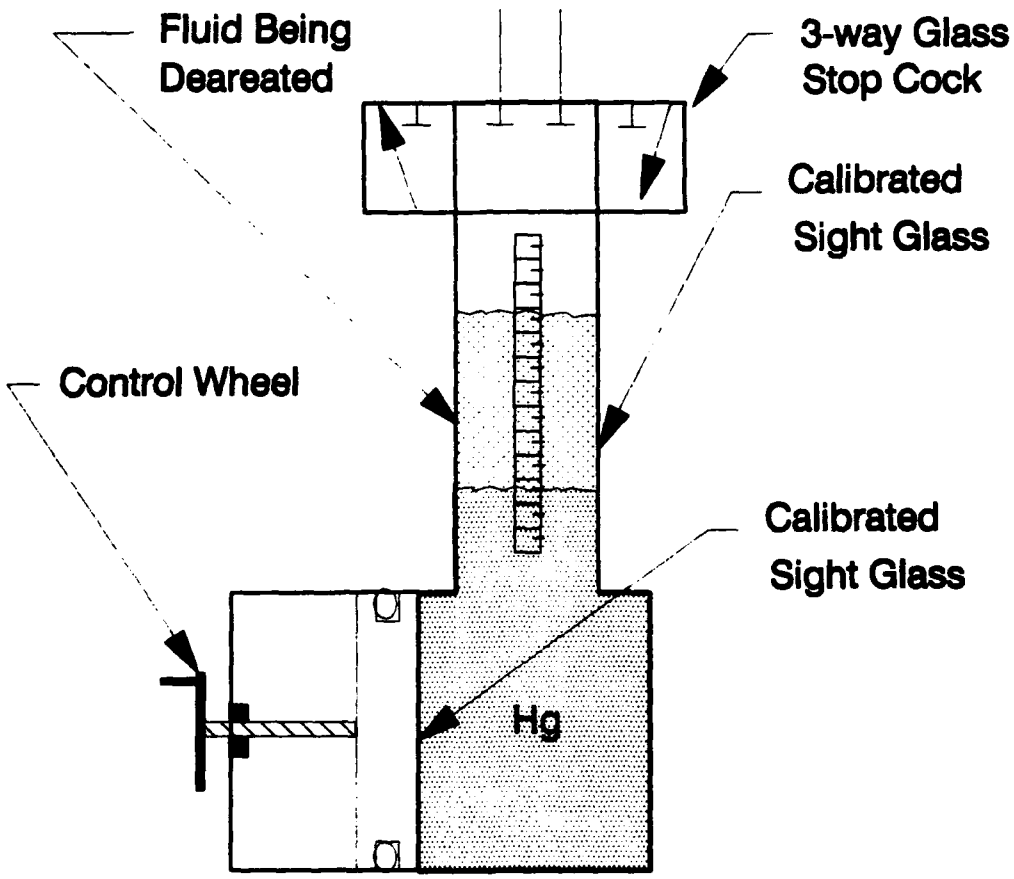

Figure D-1 - Seaton Wilson Air-ometer

DOCUMENTATION OF THE TEST FIXTURE AND TEST MODULE

A. Piston Seal Test

The cylinder barrel and piston will be documented as follows:

- Rc hardness of the test barrel will be measured and recorded
- The surface finish of the cylinder I.D. will be measured and recorded
- The cylinder bore will be surveyed with a recording profilometer and printed copies of the surface finish records kept for documentation
- The groove diameters and the O.D. of the piston will be measured and recorded
- Important surface finishes on the test piston will be measured and documented

B. Rod Seal Test

The test rod and seal glands will be documented as follows:

- Rc hardness of the test rod will be measured and recorded
- The rod O.D. will be measured and recorded
- The surface finish of the test rod will be surveyed with a recording profilometer and printed copies of the surface finish records kept for documentation
- The groove diameters and the I.D. of the test gland will be measured and recorded
- Important surface finishes on the test piston will be measured and documented

PERFORMANCE CRITERIA

The primary parameters for performance will be seal leakage and wear. Secondary parameters will include ease of installation and failure mode.

Since the prescreen testing is a comparison between seal designs under the same conditions, the seals will be ranked in performance according to leakage and wear. Also, since the primary consideration is leakage, the wear will be considered only as it causes leakage or demonstrates a catastrophic failure mode.

For example, a seal may show more wear than others, but leak less throughout the course of testing. This seal would then be ranked higher than a seal which showed less wear, but allowed greater leakage.

When the wear pattern of a particular seal is examined, and it is determined by inspection that sudden and catastrophic failure could occur without warning, the seal will be judged not acceptable.

Also, if the rate of increase in leakage goes beyond a certain predetermined level during the test, this will be considered to be a failure. The reason is that during the service life of a seal, the leakage will start at some level that is acceptable for a new seal, and progress due to wear to a point at which the seal is no longer acceptable and must be replaced. This point, however, must be such that the rate of leakage is well below a point that would create a safety problem for the aircraft. Further, continued deterioration in the leakage rate should be at a low level to provide enough time for a scheduled maintenance interval to pass, so that the leaking seal may be discovered and replaced before the leakage is sufficient to cause a hazard to flight. In other words, it is not desirable to have a seal that would pass inspection, and then fail in a catastrophic manner in the next flight.

Piston seals will be allowed greater leakage than rod seals because the consequences of piston seal leakage are not as great as for a rod seal.

A small piston seal leak may increase system heating and reduce performance, but will not cause loss of system fluid. The amount of rod seal overboard leakage to cause an unacceptable loss of system fluid is much less than the acceptable amount of piston seal by-pass leakage.

The prescreen test has been described as a comparative wear test so that absolute leak rate will be of less importance than relative performance.

However, to reduce the amount of test time, a practical limit will be set for the amount of leakage that will be allowed before the test is discontinued.

These limits will be as follows:

A. Piston Seals
Maximum leak rate----------30cc/min static leakage or 25 drops per cycle dynamic

Total leakage allowed before stopping test--------500 cc

B. Rod Seals
Maximum leak rate----------2 drops per minute static leakage or 1 drop per cycle dynamic leakage

Total leakage allowed before stopping test--------200cc

SPECIFIC PROCEDURE

The test arrangement will be as shown in the schematic diagram in Figure 2. The test specimens, following documentation previously described, will be installed into the test fixture.

The fluid will be prepared and introduced into the test circuit as previously described. Prior to start of actual testing, the test seals will be "worn in" by gradually applying test pressure and cycling, according to the recommendation of the seal manufacturer. During the "wear-in" period, leakage will not be collected.

Following the wear-in period, the leak collector will be carefully set to zero datum. The test will then be started by cycling the long stroke mode only (no dither) at 100 to 500 psi pressure during heat-up. Cycles will not be counted during heat-up.

When the test temperature is reached the test pressure will be applied by pressurizing the intensifier unit with nitrogen gas. The cycles will be counted and leakage monitored.

The test will be continued until 50,000 3-inch stroke cycles and 1×10^6 0.080" stroke dither cycles are accomplished. The test will be discontinued prior to this time if the previously mentioned leak rates or accumulations are exceeded.

At the conclusion of the test, the accumulated leakage will be measured and the leak collector reset to zero datum. The seal test modules will be disassembled, measured and documented.

Each test is expected to take 4 days, so the warm-up procedure described above will be repeated each time the test is shut down.

All the candidate seals will be tested at the prescribed test conditions prior to change to a more severe condition unless a seal has not failed during the test sequence. If a seal has not failed during a sequence, the next sequence will be applied, in turn, until failure. If a seal does fail after having accomplished more than one sequence, it will be given an opportunity to accomplish that sequence with a fresh seal.

The test sequences are as follows:

Test Sequence	Pressure	Temperature
A.	5000 psi	500 ^{o}F
B.	5000 psi	600 ^{o}F
C.	6000 psi	600 ^{o}F
D.	6000 psi	700 ^{o}F
E.	7000 psi	700 ^{o}F
F.	8000 psi	700 ^{o}F

APPENDIX E

ANALYSIS OF TEST STROKING MOTION

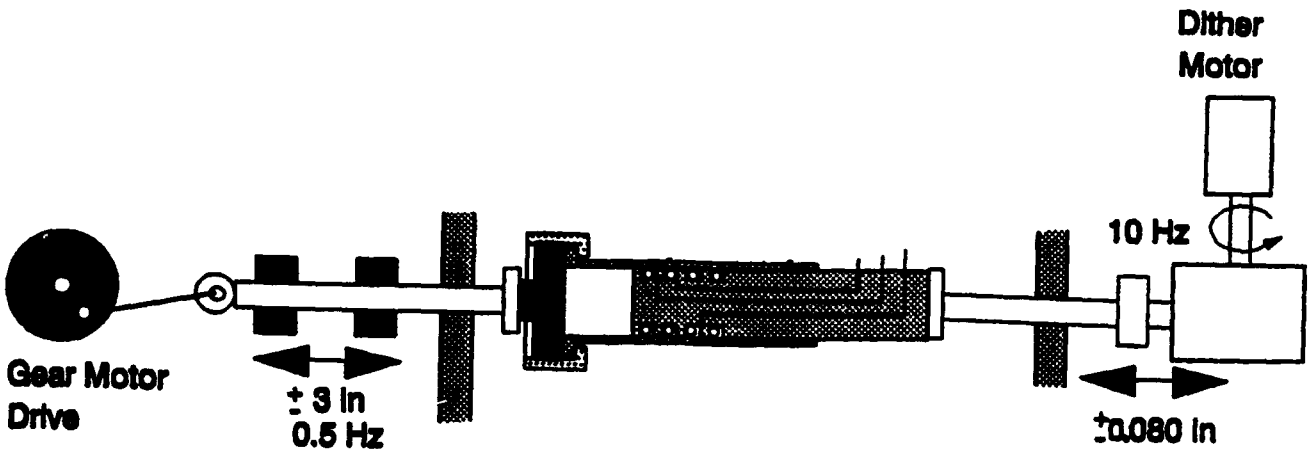

Motion of Barrel -Sinusoidal displ. 2R @ $W_1 = R \sin W_1 t$

Motion of Piston -Sinusoidal displ. 2r @ $W_2 = r \sin W_2 t$

$W = 2\pi \times f$ (f in Hertz)
$f_1 = 0.5$
$f_2 = 10$

$R = 1.5$ in
$r = 0.04$ in

so:

Motion of Barrel is $1.5 \times \sin 2\pi \times 0.5 = 1.5 \sin 3.14\, t$

Motion of Piston is $0.04 \times \sin 2\pi \times 10 = 0.04 \sin 62.8\, t$

Relative motion of Piston to Barrel:

$$X_j = 1.5 \sin 3.14\, t - 0.04 \sin 62.8\, t$$

differentiate to obtain relative velocity V_j:

$$V_j = (1.5)(3.14) \cos 3.14\, t - (0.04)(62.8) \cos 62.8\, t$$
$$= 4.71 \cos 3.14\, t - 2.51 \cos 62.8\, t$$

See following page for plots of X_j and V_j versus t.

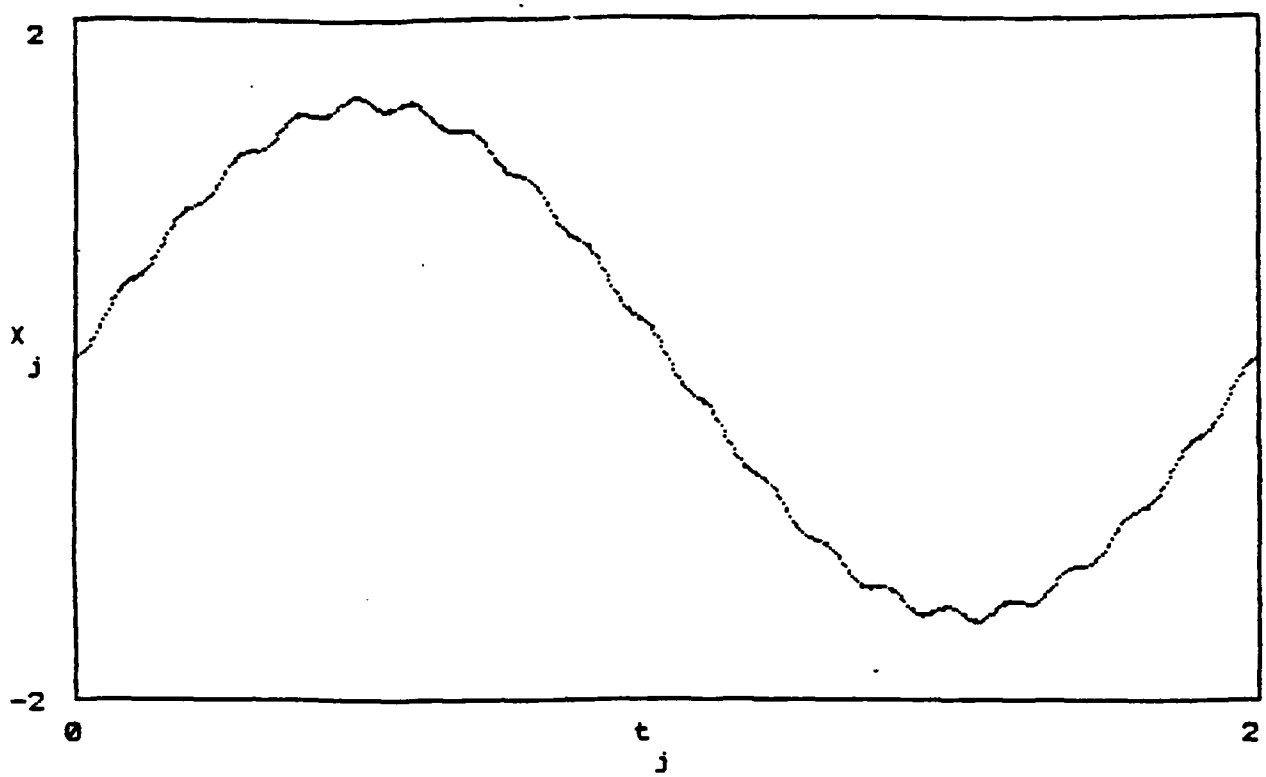

Plot of X_j versus t
(Inches vs. Seconds)

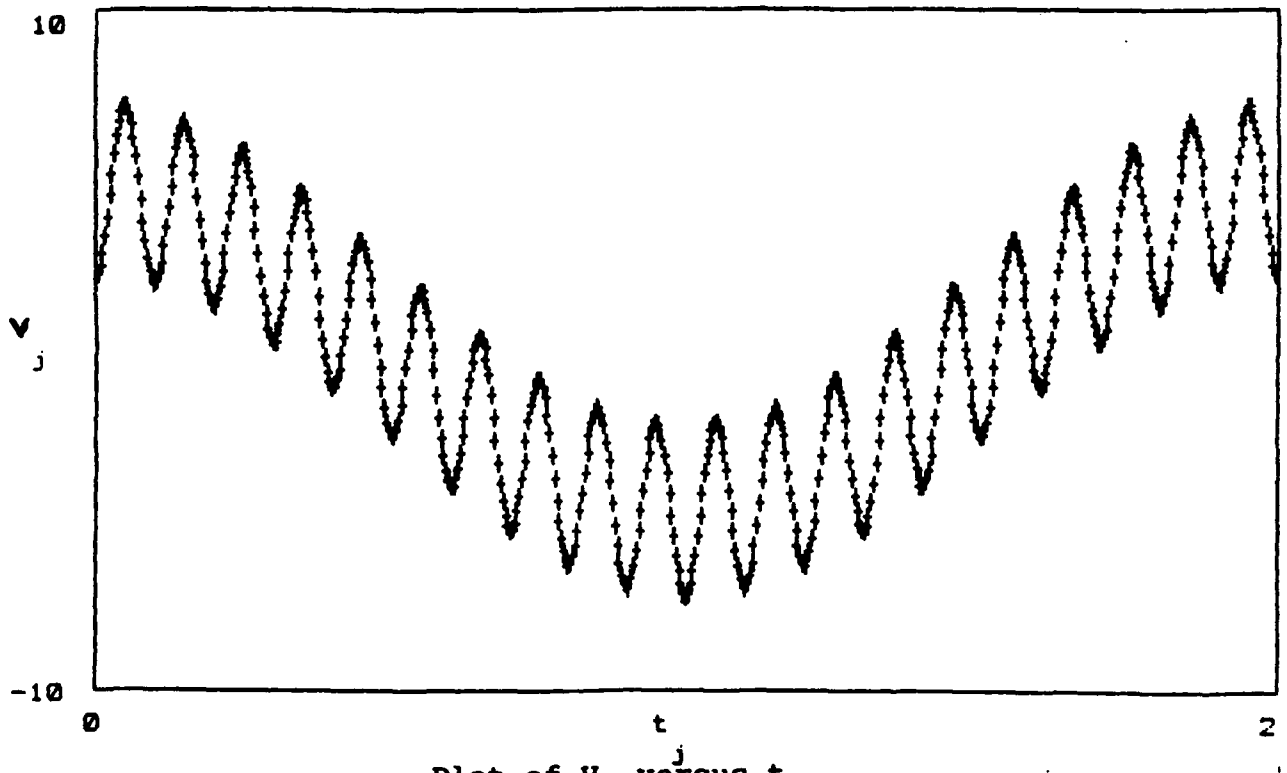

Plot of V_j versus t
(Inches per sec vs. seconds)

APPENDIX F

DESIGN OF PISTON SEAL TEST BARREL

AND

ANALYSIS FOR PRESSURE EXPANSION

1. Determine Barrel Thickness

Barrel thickness is based on material ultimate tensile strength (UTS) at burst test pressure or tensile yield strength (TYS) at proof test pressure.

Material: PH 13-8 Mo H.T. to H950

UTS = 235ksi @ 70°F

TYS = 210ksi @ 70°F

Per Reference 10, Vol. 1, page 2-148, the strength is reduced to approximately 72 percent at 700°F

Using 700°F as the design condition

UTS = 0.72 x 235 = 169.2ksi

TYS = 0.72 x 210 = 151.2ksi

Using 8000 psi as the system operating pressure:

proof test pressure = 150 percent operating
= 8,000 x 1.5 = 12,000psi

burst test pressure = 250 percent operating
= 8,000 x 2.5 = 20,000psi

Assume barrel I.D. = 1.742 inches

d = I.D. ; t = wall thickness

From Reference 10, page 60.48:

for p = 20,000psi (burst) d/t = 16

UTS = 169.2ksi

solving for t = d/16 = 1.742/ 16 = 0.109 inch

for p = 12,000 psi (proof) d/t = 25.8

t = d/25.8 = 1.742/25.8 = 0.068 inch

The critical design condition for the barrel then is the burst test pressure and the barrel dimensions are:

d = I.D. = 1.742 inches

D = I.D. + 2t
= 1.742 + 2(0.109) = 1.96 inches

The hoop stress at 8000 psi working pressure, σ is:

$$\sigma = P \times \frac{(D)^2+(d)^2}{(D)^2-(d)^2}$$

$$= 8{,}000 \times \frac{(1.96)^2+(1.742)^2}{(1.96)^2-(1.742)^2} = 68{,}160\text{psi}$$

$$= \frac{68{,}160}{151{,}200} = 0.45 \text{ TYS}$$

2. Determine Pressure Expansion ("breathing") of Barrel

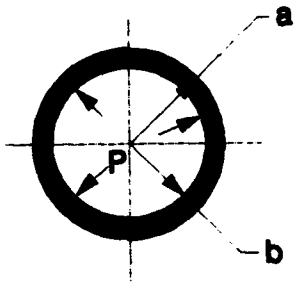

(See Reference 11, page 504, case 1.b)

delta b = change in inside radius of barrel.

$$= \frac{Pb}{E} \times \frac{a^2\ (1-v) + b^2(1-2v)}{a^2-b^2}$$

P = 8,000psi
a = D/2 =0.98 inch
b = d/2 =0.871 inch

E = modulus of elasticity
= 29 x 10^6psi
v = poisson ratio =0.3

So:

delta b=:

$$\{(8000)(0.871)/29\text{x}10^6\}\text{x}\{\frac{(0.98)^2(1+0.3)+(0.871)^2(1-0.6)}{(0.98)^2 - (0.871)^2}\}$$

= 0.00184 inch radial

or

= 0.00369 diametric

APPENDIX G

ILLUSTRATION OF SURFACE FINISH MEASUREMENT AND PARAMETERS

To illustrate the importance of specifying surface texture, or topography by means of other measurable parameters besides the common average roughness parameter, (Ra) two examples are shown. Both examples are in the form of actual measurement traces made from surfaces intended as dynamic sealing areas on hydraulic equipment.

The printed data in each case consist of a magnified readout of a stylus trace over the surface, showing all surface irregularities within the measurement area. In addition it is a printed result of the computor calculated parameters for the trace shown.

The first example shows a measured average surface roughness (Ra shown at the top of the list of parameters) of 11.5 microinches, well below the value of 16 microinches maximum specified by MIL-G-5514F.

A Cal. Factor: 1.025
A Stylus Dia.: 0.0008 in.

Ra	=	11.5	µin.
Rt	=	89.7	µin.
Rz	=	57.5	µin.
Rtm	=	79.2	µin.
Rzm	=	64.0	µin.
Rq	=	14.2	µin.
Ro	=	41.5	µin.
Rv	=	48.2	µin.
Rpm	=	36.0	µin.
Rvm	=	43.2	µin.
Rsk	=	–0.068	
Rk	=	2.844	
Rs	=	0.0002	in.
Rsm	=	0.0009	in.
Rla	=	0.0009	in.
Rlq	=	0.0009	in.
Rda	=	0.079	
Rdq	=	0.104	

HSC (5 µin., 20 µin.) = 203
PC (05) = 767
PC (10) = 596
PC (25) = 311
PC (50) = 89

Horz Scale 0.0100 in./div
Vert Scale 10.00 µin./div
Vert Mag.: 20,000x
Sample Interval: 39 µin.

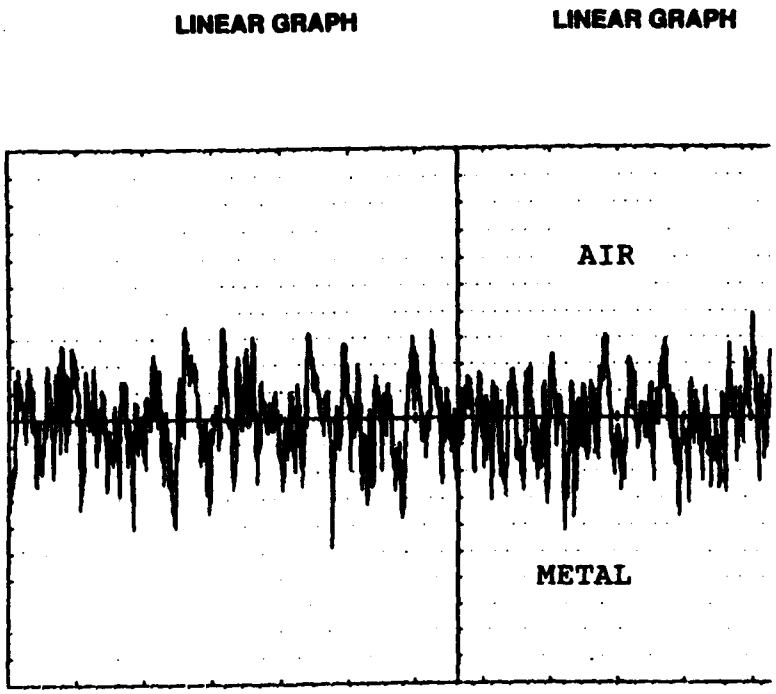

Notice, however, that the distribution of the peaks and valleys is not a homogeneous or uniform set that tend to be near the average of 11.5 microinches. Instead, there are within the measurement length more than 300 sets (Pc or peak count parameter near the bottom of the data column) which exceed 25 microinches, and 89 peaks that exceed 50 microinches. Even though this surface technically meets the specified requirements, it would cause early seal failure.

The second example is actually a set of three data traces shown for comparison. The surface having the lowest Ra value shown on the right, appears visually rougher when the trace is inspected, and contains more than twice the number of peaks exceeding 5 microinches than does the center trace which has a measured roughness of 2.5 microinches. In fact, the surface represented by the center grouping of data has the highest roughness measurement (Ra) but is the most uniform and has the lowest overall count of extreme peaks.

Ra	=	2.0	µin.	Ra	=	2.5	µin.	Ra	=	1.5	µin.
Rt	=	34.5	µin.	Rt	=	23.5	µin.	Rt	=	28.7	µin.
Rz	=	13.7	µin.	Rz	=	6.5	µin.	Rz	=	6.5	µin.
Rtm	=	22.0	µin.	Rtm	=	13.2	µin.	Rtm	=	16.7	µin.
Rzm	=	13.7	µin.	Rzm	=	7.2	µin.	Rzm	=	9.2	µin.
Rq	=	3.0	µin.	Rq	=	3.2	µin.	Rq	=	2.5	µin.
Ro	=	5.2	µin.	Ro	=	12.7	µin.	Ro	=	6.0	µin.
Rv	=	29.5	µin.	Rv	=	10.7	µin.	Rv	=	22.7	µin.
Rpm	=	4.2	µin.	Rpm	=	6.2	µin.	Rpm	=	4.0	µin.
Rvm	=	17.7	µin.	Rvm	=	0.0	µin.	Rvm	=	12.7	µin.
Rsk	=	2.349		Rsk	=	1.010		Rsk	=	2.124	
Rk	=	14.466		Rk	=	5.227		Rk	=	16.007	
Rs	=	0.0002 in.		Rs	=	0.0002 in.		Rs	=	0.0001 in.	
Rsm	=	0.0009 in.		Rsm	=	0.0011 in.		Rsm	=	0.0008 in.	
Rla	=	0.0007 in.		Rla	=	0.0012 in.		Rla	=	0.0009 in.	
Rds	=	0.010		Rds	=	0.012		Rds	=	0.011	
HSC (0 µin., 2 µin.) = 374				HSC (0 µin., 10 µin.) = 0				HSC (0 µin., 10 µin.) = 0			
PC (05) =		76		PC (05) =		25		PC (05) =		51	
PC (10) =		6		PC (10) =		6		PC (10) =		13	
PC (25) =		0		PC (25) =		0		PC (25) =		0	
PC (50) =		0		PC (50) =		0		PC (50) =		0	
Rcp% h (1.5 µin.) = 81.1%				Rcp% h (5 µin.) = 94%				Rcp% h (5 µin.) = 99.3%			
Rtp% h (1.5 µin.) = 18.9%				Rtp% h (5 µin.) = 0%				Rtp% h (5 µin.) = 0.7%			
Horz Scale 0.0100 in./div				Horz Scale 0.0100 in./div				Horz Scale 0.0100 in./div			
Vert Scale 10.00 µin./div				Vert Scale 10.00 µin./div				Vert Scale 10.00 µin./div			
Vert Mag.: 20,000x				Vert Mag.: 20,000x				Vert Mag.: 20,000x			
Sample Interval: 39 µin.				Sample Interval: 39 µin.				Sample Interval: 39 µin.			

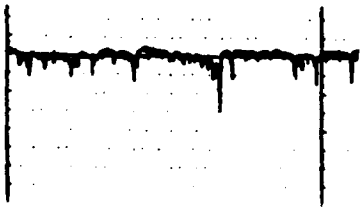

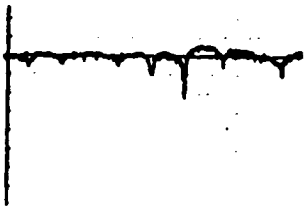

APPENDIX H

GENERAL SUMMARY OF PISTON SEAL TEST RESULTS

TEST 1.

SEAL TYPE		
PRIMARY 1*	PRIMARY2**	SECONDARY
Advantec MSE 20-500601 Avalon 87	Krueger Delta polyimide SP-21	Advanced Products #46323-222 Ener 8

RESULT: Barrel 001
These seals survived 50k 3-inch cycles with combined $1x10^6$ cycles dither at 500^oF and 5000 psi test pressure

Plus

Approximately 50k 3-inch cycles with $1x10^6$ cycles dither at 600^oF and 5000 psi test pressure.

Test was stopped due to leakage in excess of failure criteria

TEST 2.

Advantec MSE 20-500601 Avalon 87	Krueger Delta polyimide SP-21	Advantec MSE 20-500601 Avalon 87

RESULT: Barrel 001
These seals were subjected to 50k 3-inch cycles combined with $1x\ 10^6$ dither cycles (one test block) at 600^oF and 5000 psi test pressure. At 36,180 3-inch cycles into this block the Krueger seal failed. Upon disassembly, it was found that the lead had melted from the K seal. The Krueger seal was replaced and the K seal was replaced with a gold plated K seal and the test was resumed with the same Advantec seal.
A second block of cycles was applied at 600^oF and 6000 psi; however, at 37.6k 3-inch cycles into this block, the Krueger seal was leaking beyond the failure criteria, so the test was stopped.

* Located at the cap end of the test module.

** Located at the piston end of the test module.

TEST 3A

SEAL TYPE		
PRIMARY 1	PRIMARY 2	SECONDARY
Advantec MSE 20-500601 Avalon 87	Krueger Delta PBI	Advantec MSE 20-500601 Avalon 87

RESULT: Barrel 002
These seals were first subjected to a -65°F cold test. Following the cold test, the seals were subjected to 600°F and 6,000 psi test conditions which they survived until 37,754 cycles, at which time total leakage volume exceeded limits.
Advantec seal was found in excellent condition and was retained for the following test. Krueger seal loading ring was found blocked by carbon particles from broken carbon bearing; otherwise, the Krueger seal was in good condition.

TEST 3B

SEAL TYPE		
PRIMARY 1	PRIMARY 2	SECONDARY
Advantec MSE 20-500601* Avalon 87	Krueger Delta Meldin 2021	Advantec MSE 20-500601 Avalon 87

RESULT: Barrel 002
Seals were subjected to -65°F cold test.
Following the cold test, 2000 cycles were applied to warm up to test conditions, but excessive leakage was encountered. A room-temperature static-leak test was run with mixed results. The test was disassembled and some scratches were found in the barrel. The Advantec seal was somewhat worn or shrunk.

*Retained from previous test.

TEST 4

SEAL TYPE		
PRIMARY 1	PRIMARY 2	SECONDARY
Cook Airtomic AMD 19474	Cook Airtomic AMD 19474	Advantec MSE 20-500601

RESULT: Barrel 003

A -65°F cold test was performed with each seal leaking about 40 ml. fluid during the test.
Following the cold test, an attempt was made to warm up to the 600°F, 6,000 psi test condition, but leakage was too great to permit full pressurization.
Testing was stopped and unit disassembled.
One of the carbon bearings was cracked. Also, the Cook Airtomic seals and the test barrel was scored.

TEST 5

SEAL TYPE		
PRIMARY 1	PRIMARY 2	SECONDARY
Advanced Products PBI	Advanced Products PBI	Advantec MSE 20-500601 Avalon 87

RESULT: Barrel 004

PBI seals were very stiff and difficult to install.
A low-temperature leak test was accomplished with an average of 1 mL per seal leakage during the test.
During warmup to the hot-test conditions, heavy leakage started at about 736 cycles.
Teardown examination revealed the PBI jackets on the Advanced Products seal had cracked.
A rerun of the test without the cold soak produced the same result.

TEST 6

SEAL TYPE		
PRIMARY 1	PRIMARY 2	SECONDARY
Shamban S37906	Shamban S37906	Advantec MSE 20-500601

RESULT: Barrel 004

During room temperature static leak test, the seals leaked excessively, so the test was discontinued.

The test seals and hardware were unchanged when inspected after the test.

TEST 7

SEAL TYPE		
PRIMARY 1	PRIMARY 2	SECONDARY
Furon 60706-01048	Furon 60706-01048	Advantec MSE 20-500601 Avalon 87

RESULT: Barrel 004

Same as for Test 6 above.

TEST 8

SEAL TYPE		
PRIMARY 1	PRIMARY 2	SECONDARY
Krueger Delta Meldin	Krueger Delta Meldin	Advantec MSE 20-500601 Avalon 87

RESULT: Barrel 004

The seals were cold tested at -65°F with the seals averaging 1.5 mL leakage during the test.

Subsequently, a 600°F, 6,000 psi test was run and 11,412 cycles were accomplished. The test was stopped due to leakage of one of the secondary seals.

The worn secondary seals were replaced and testing continued to 36,412 cycles at which time the primary seals failed.

One primary seal was found substantially eroded.

TEST 9

SEAL TYPE		
PRIMARY 1	PRIMARY 2	SECONDARY
Advanced Products PBI	Advanced Products PBI	Advantec MSE 20-500601 Avalon 87

RESULT:

This is largely a repeat of Test 5 with similar results. The seals were stiff and difficult to install and failed prior to reaching the test pressure.

APPENDIX I

CRITICAL MEASUREMENTS OF TEST SPECIMENS AND HARDWARE

FIRST PRESCREEN TEST

AVERAGE HARDNESS Rc 46

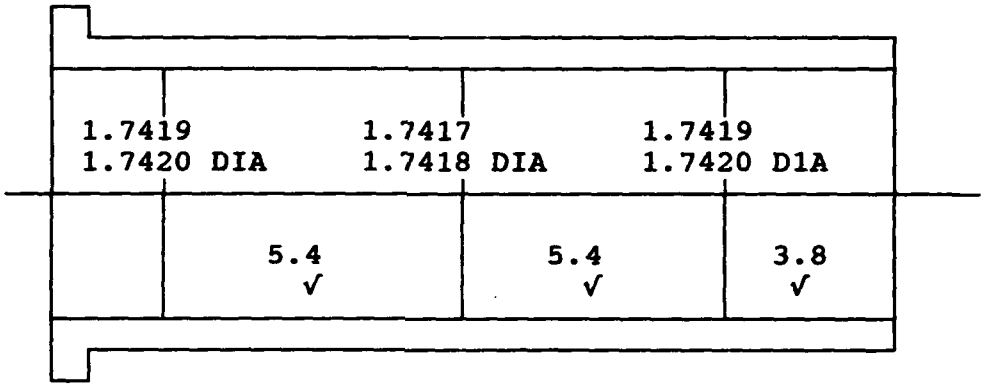

BARREL 001

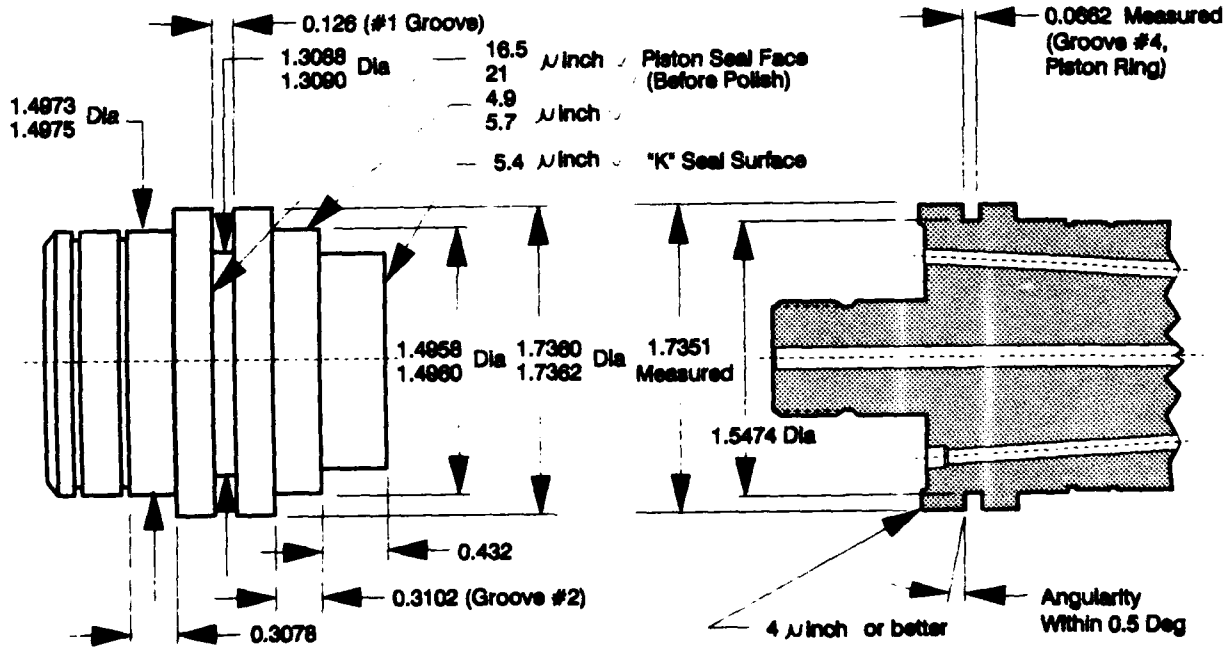

PISTON AND BARREL DIMENSIONS PRIOR TO TEST

FIRST PRESCREEN TEST

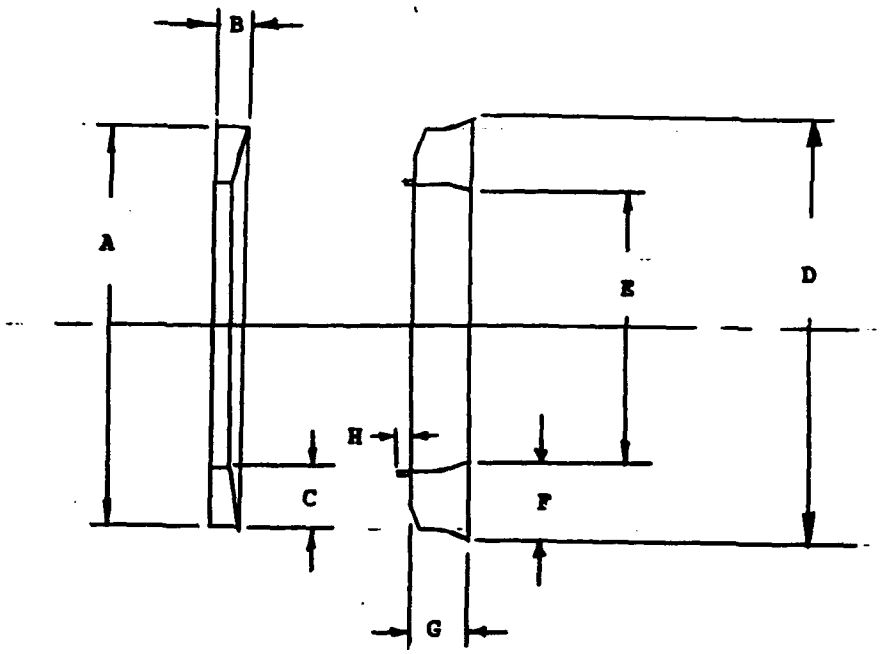

MEASUREMENT OF ADVANTEC MSE 20-500601 SEAL

DIM	BEFORE TEST	AFTER TEST
A	1.759 in.	NOT MEASURED
B	0.075 in.	0.076 /0.078 in.
C	0.123 in.	0.112 in.
D	1.7902/1.7904 in.	1.723 /1.725 in.*
E	1.474 in.**	1.475 in.
F	0.146 in.**	0.125 in.
G	(NOT MEASURED)	(NOT MEASURED)
H	(NO EXTRUSION)	0.025 in.

* Measures 1.736 in. after test, mounted on 1.497 in. diameter mandrel.

** Drawing dimension; not measured.

FIRST PRESCREEN TEST

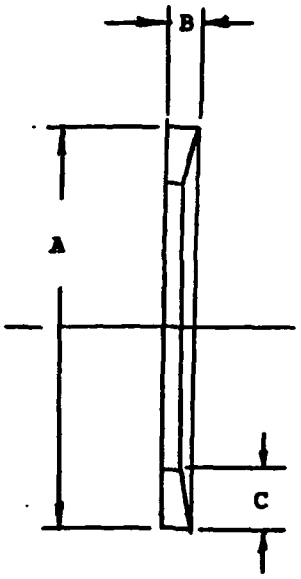

MEASUREMENT OF KRUEGER DELTA SEAL P/N 124520-1742

DIM	BEFORE TEST	AFTER TEST
A	1.743 in.	1.728 in.
B	0.060 in.	0.064/0.065 in.*
C	0.050 in.	0.040/.042 in.

* Includes 0.003/0.004 in. extrusion "feather"

FIRST PRESCREEN TEST

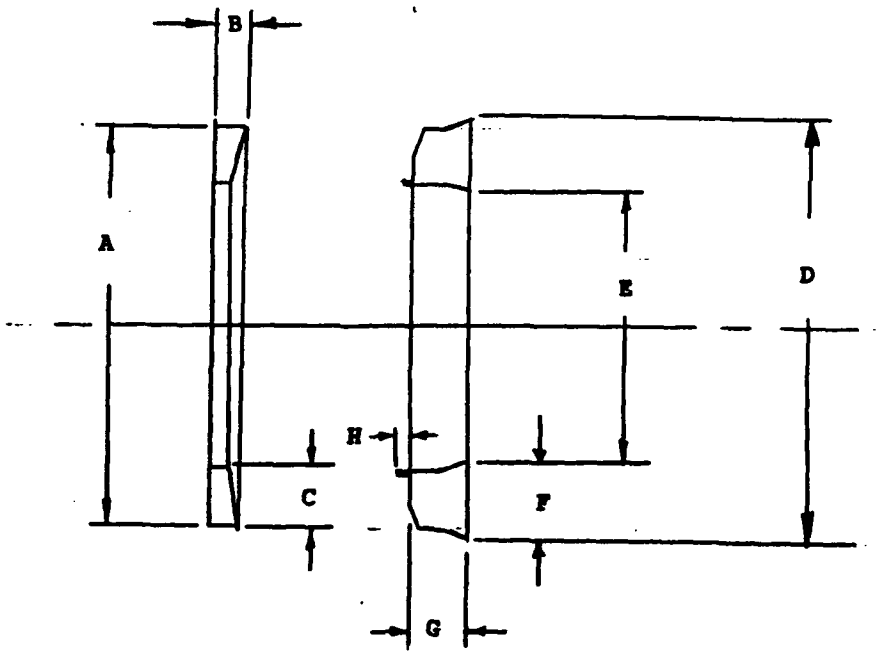

MEASUREMENT OF ADVANCED PRODUCTS P/N 46323 SEAL
(SECONDARY SEAL)

DIM	BEFORE TEST	AFTER TEST
A	1.750 in.	1.716/1.711 in.
B	0.052 in.	0.058/0.060 in.
C	0.121 in.	0.112/0.116 in.
D	1.748/1.760 in.*	1.728/1.731 in.**
E	1.478/1.490 in.*	(NOT MEASURED)
F	0.134/0.135 in.	0.115/0.121 in.
G	0.189 in.	0.190 in.
H	(NO EXTRUSION)	(NO EXTRUSION)

* Drawing dimension; not measured.

** Measured after test, mounted on 1.497 in. diameter mandrel.

FIRST PRESCREEN TEST

AVERAGE HARDNESS Rc 45.9

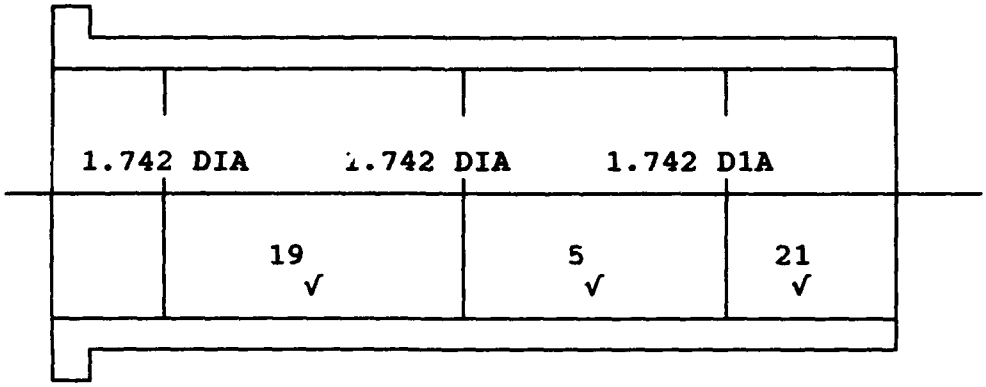

BARREL 001

BARREL DIMENSIONS AFTER TEST

NOTE: PISTON DIMENSIONS UNCHANGED

SECOND PRESCREEN TEST

AVERAGE HARDNESS Rc 46

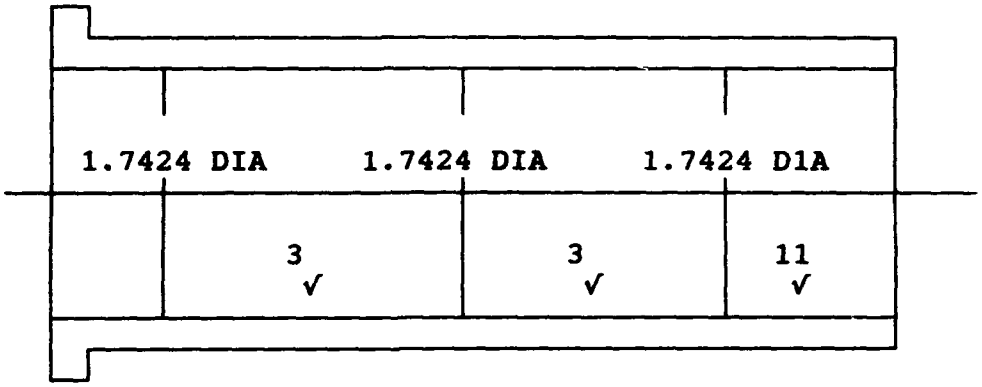

BARREL 001

BARREL DIMENSIONS BEFORE TEST

(HONED AFTER PREVIOUS TEST)

NOTE: PISTON DIMENSIONS UNCHANGED

SECOND PRESCREEN TEST

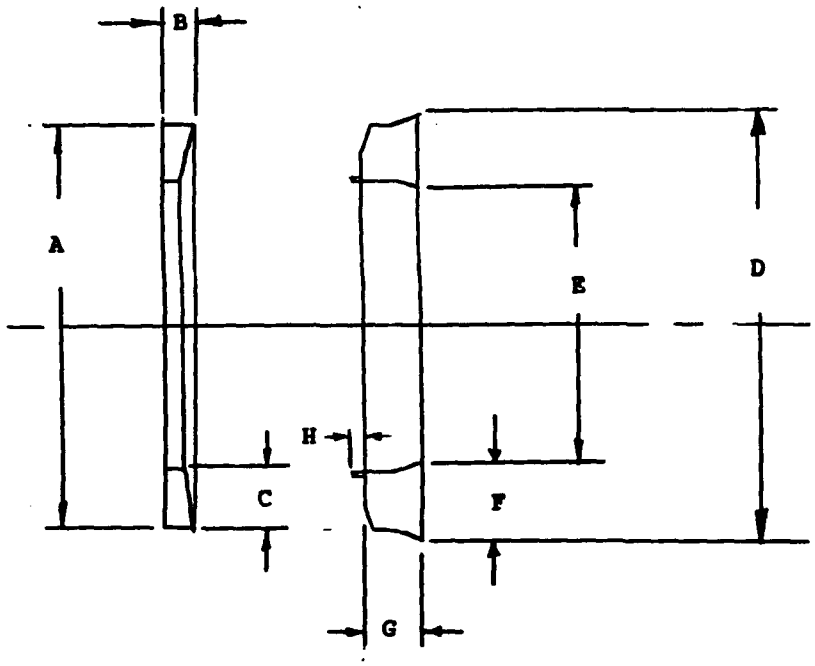

MEASUREMENT OF ADVANTEC MSE 20-500601 SEAL

DIM	BEFORE TEST	AFTER TEST
A	1.759 in.	1.746/1.749 in.
B	0.074/0.0745 in.	0.086/0.087 in.
C	0.122 in.	0.112/0.114 in.
D	1.7846/1.794 in.*	1.735/1.736 in.*
E	1.474 in.**	1.463 in.
F	0.146 in.**	(NOT MEASURED)
G	(NOT MEASURED)	0.250 in.
H	(NO EXTRUSION)	0.020/0.030 in.

* Measured mounted on 1.497 in. diameter mandrel.
** Drawing dimension; not measured.

SECOND PRESCREEN TEST

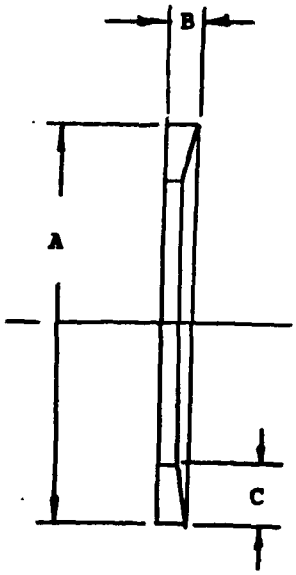

MEASUREMENT OF KRUEGER DELTA SEAL P/N 124520-1742
(FIRST SEAL)

DIM	BEFORE TEST	AFTER TEST
A	1.744 in.	1.738 in.
B	0.060 in.	(NO RECORD)
C	0.050 in.	(NO RECORD)

SECOND PRESCREEN TEST

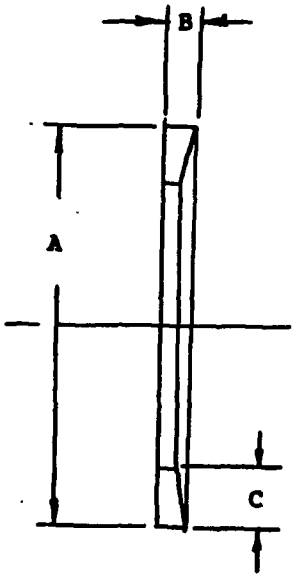

MEASUREMENT OF KRUEGER DELTA SEAL P/N 124520-1742
(SECOND SEAL)

DIM	BEFORE TEST	AFTER TEST
A	1.741 in.	1.737 in.
B	0.060 in.	0.066/0.061 in.*
C	0.050 in.	0.043/0.035 in.

*Includes a very slight extrusion lip.

SECOND PRESCREEN TEST

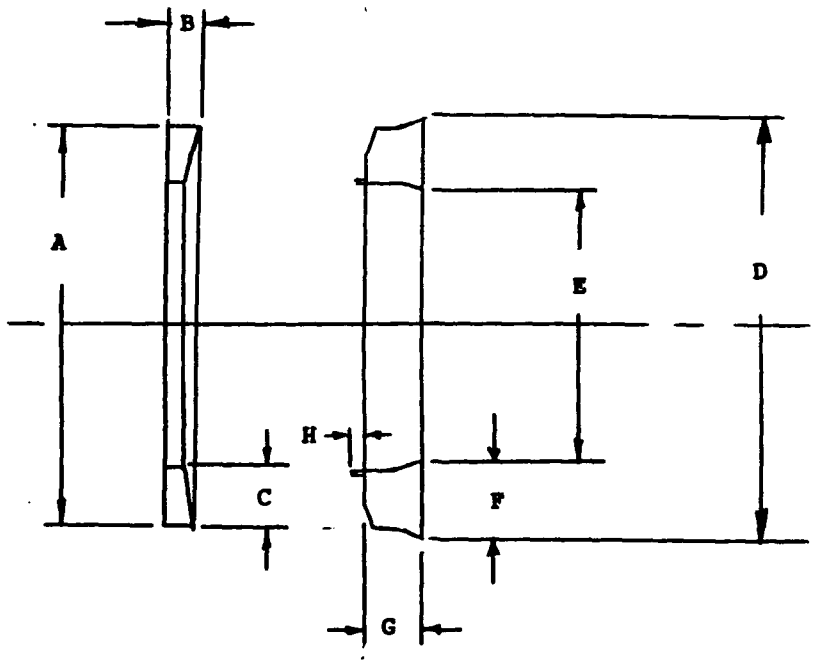

MEASUREMENT OF ADVANTEC MSE 20-500601 SEAL
(ONE OF TWO SECONDARY SEALS USED IN FIRST PART)

DIM	BEFORE TEST	AFTER TEST
A	(NOT MEASURED)	(NOT MEASURED)
B	"	0.081 in.*
C	"	0.124 in.
D	"	1.710/1.711 in.**
E	"	(NOT MEASURED)
F	"	0.122 in.
G	"	(NOT MEASURED)
H	"	(NO EXTRUSION)

* Includes small extrusion lip.

** Measured without mandrel. Was 1.731/1.726 in. when mounted on a 1.497 in. diameter mandrel.

SECOND PRESCREEN TEST

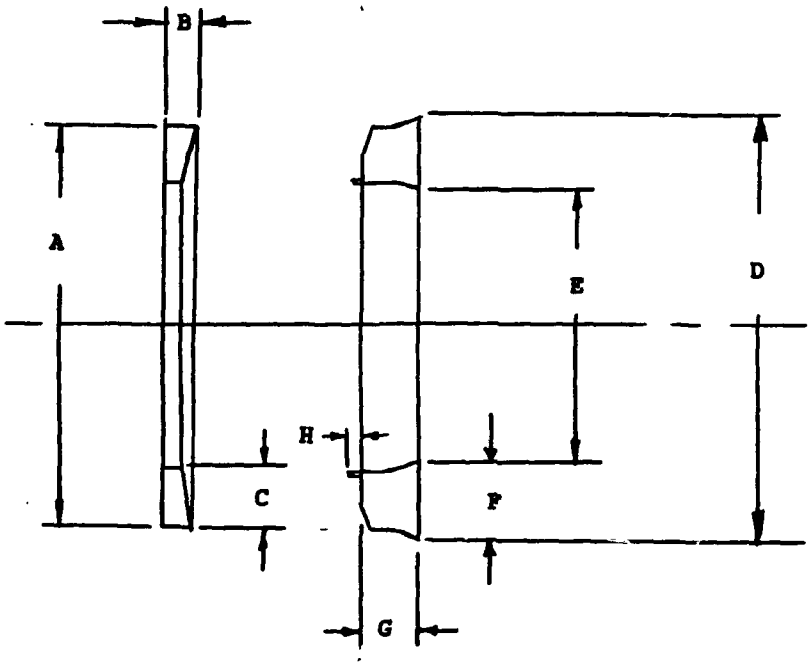

MEASUREMENT OF ADVANTEC MSE 20-500601 SEAL
(ONE OF TWO SECONDARY SEALS USED IN FIRST PART)

DIM	BEFORE TEST	AFTER TEST
A	(NOT MEASURED)	1.742 in.
B	"	0.079/0.080 in.
C	"	0.126 in.
D	"	1.710/1.711 in.*
E	"	(NOT MEASURED)
F	"	0.127 in.
G	"	0.271 in.
H	"	(NO EXTRUSION)

* Measured without mandrel. Was 1.735/1.736 in. when mounted on a 1.497 in. diameter mandrel.

SECOND PRESCREEN TEST

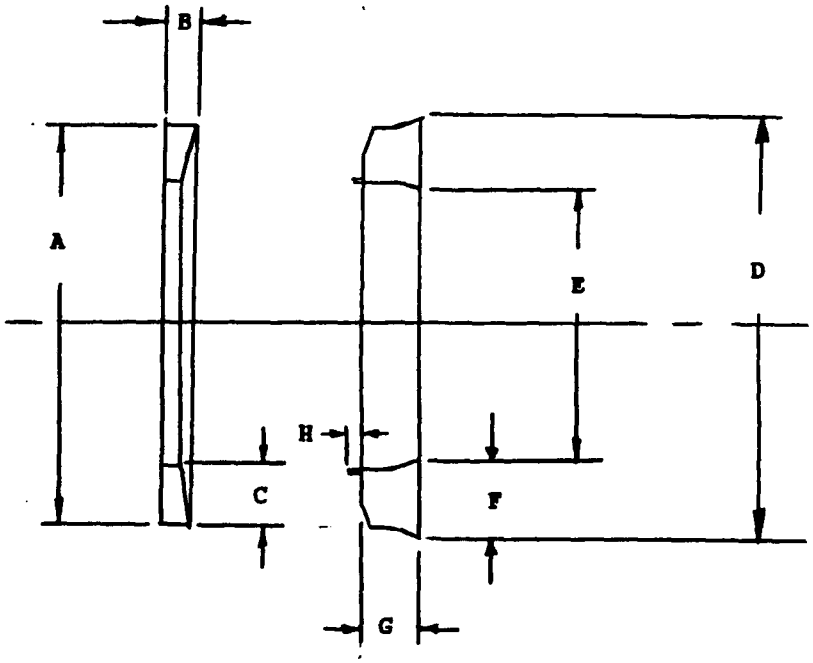

MEASUREMENT OF ADVANTEC MSE 20-500601 SEAL
(SECONDARY SEAL FROM PISTON END USED IN SECOND PART)

DIM	BEFORE TEST	AFTER TEST
A	(NOT MEASURED)	1.739/1.741 in.
B	"	0.076/0.077 in.
C	"	0.122/0.123 in.
D	"	1.710/1.712 in.*
E	"	1.468 in.
F	"	0.122/0.124 in.
G	"	0.268/0.276 in.
H	"	(NO EXTRUSION)

* Measured without mandrel. Was 1.722/1.723 in. when mounted on a 1.497 in. diameter mandrel.

SECOND PRESCREEN TEST

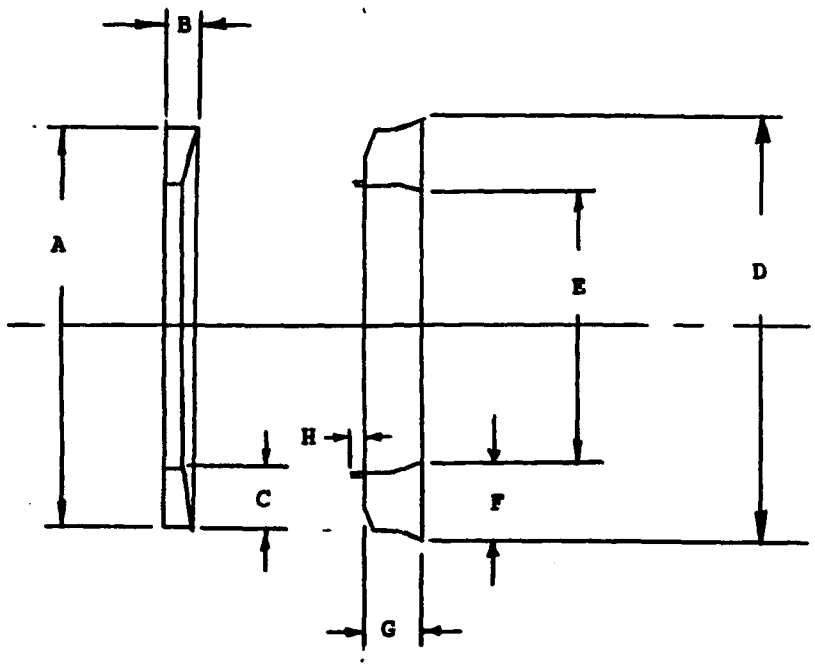

MEASUREMENT OF ADVANTEC MSE 20-500601 SEAL
(SECONDARY SEAL FROM DRIVER END USED IN SECOND PART)

DIM	BEFORE TEST	AFTER TEST
A	(NOT MEASURED)	1.745/1.746 in.
B	"	0.076/0.080 in.
C	"	0.123/0.124 in.
D	"	1.700 in.*
E	"	1.462 in.
F	"	0.118/0.124 in.
G	"	0.279/0.283 in.
H	"	(NO EXTRUSION)

* Measured without mandrel. Was 1.710/1.720 in. when mounted on a 1.497 in. diameter mandrel.

SECOND PRESCREEN TEST

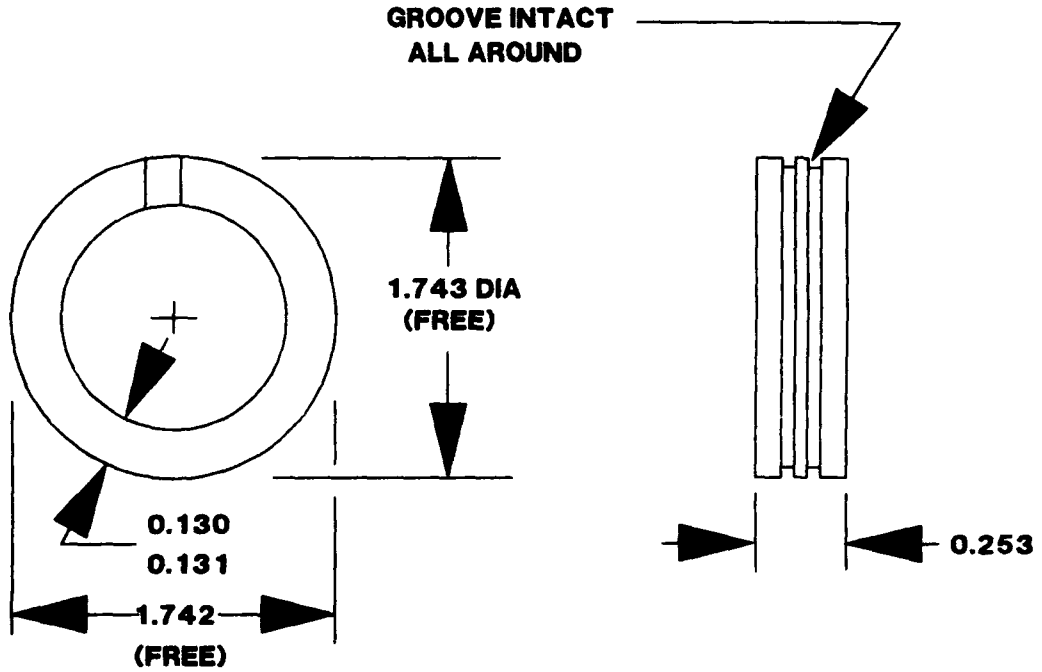

NUMBER 1 BEARING

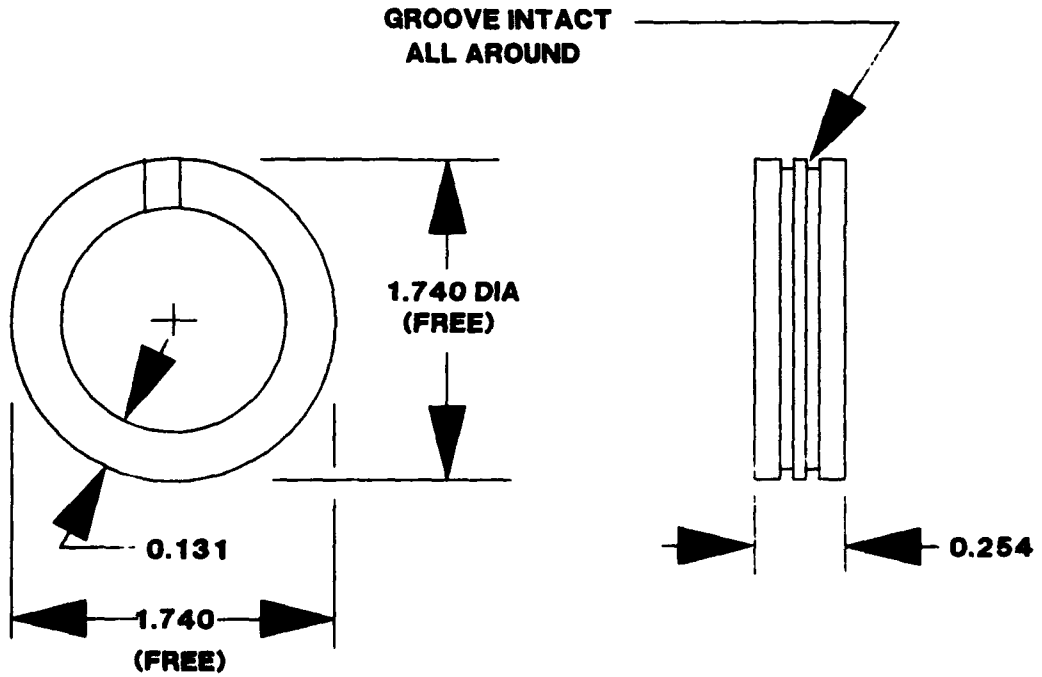

NUMBER 2 BEARING

CONDITION OF CARBON SUPPORT BEARINGS FOLLOWING TEST

SECOND PRESCREEN TEST

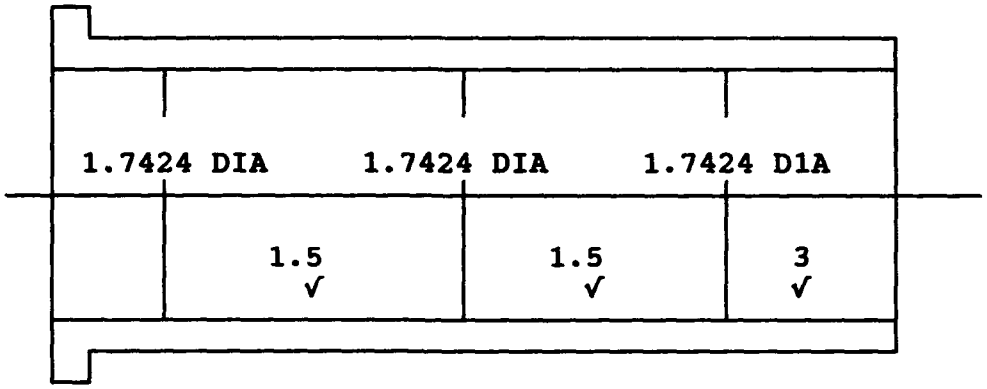

BARREL 001

BARREL DIMENSIONS AFTER TEST

NO MEASURABLE WEAR. SOME VISIBLE LONGITUDINAL SCRATCHES IN CENTER OF BARREL.

NOTE: PISTON DIMENSIONS UNCHANGED

THIRD PRESCREEN TEST

AVERAGE HARDNESS Rc 46

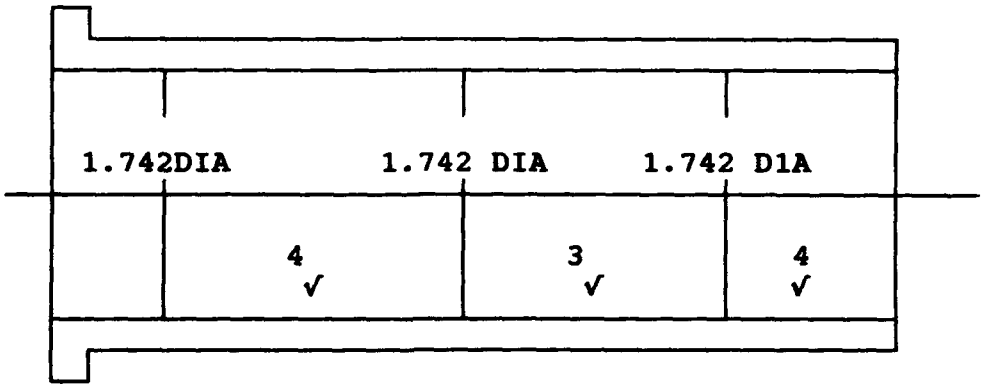

BARREL 002

BARREL DIMENSIONS PRIOR TO TEST

NOTE: PISTON DIMENSIONS UNCHANGED

THIRD PRESCREEN TEST

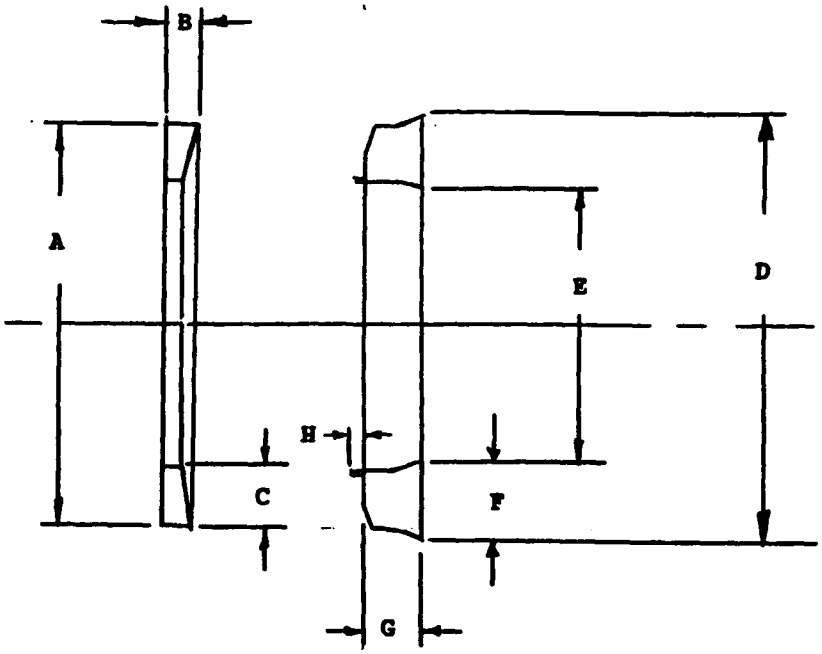

MEASUREMENT OF ADVANTEC MSE 20-500601 SEAL

DIM	BEFORE TEST	AFTER TEST
A	1.759 in.	**
B	0.074/0.075 in.	
C	0.122 in.	
D	1.768 in.*	
E	1.471 in.	
F	0.157 in.	
G	0.252/0.253 in.	
H	(NO EXTRUSION)	**

* Not measured on mandrel. Was 1.768/1.789 in. when measured on 1.497 in. diameter mandrel.

** Seal was worn thru to spring in a small area. It was not measured.

THIRD PRESCREEN TEST

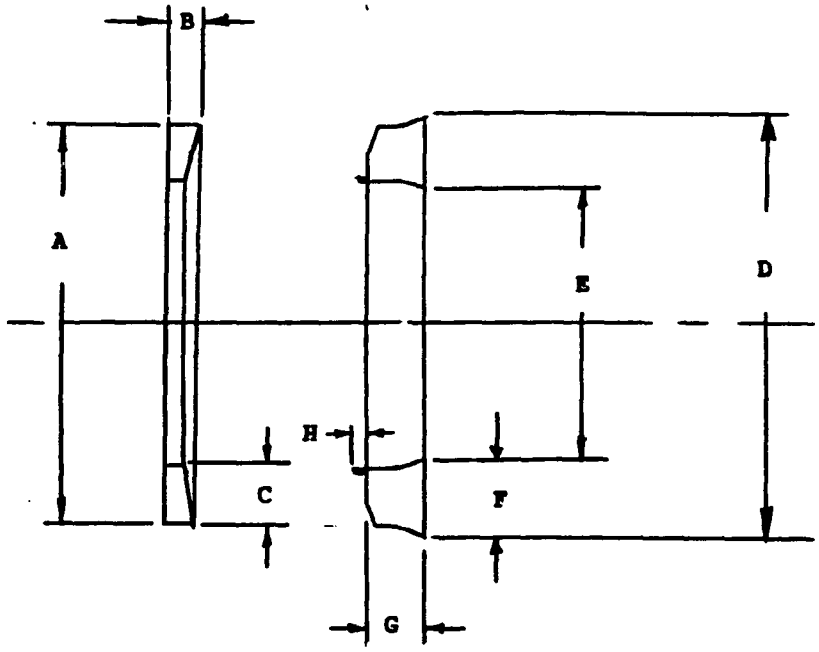

MEASUREMENT OF ADVANTEC MSE 20-500601 SEAL
USED AS SECONDARY SEAL

DIM	BEFORE TEST	AFTER TEST
A	1.752/1.754 in.	**
B	0.072 in.	0.077 in.
C	0.119/0.120 in.	**
D	1.770 in.*	1.725 in.***
E	1.459 in.	1.468 in.
F	0.157 in.	0.132 in.
G	0.246 in.	0.255 in.
H	(NO EXTRUSION)	(NO EXTRUSION)

* Not measured on mandrel. Was 1.789 in. when measured on 1.497 in. diameter mandrel.

** These dimensions not measured.

*** Not measured on mandrel. Was 1.733/1.736 in. when measured on 1.497 in. diameter mandrel.

THIRD PRESCREEN TEST

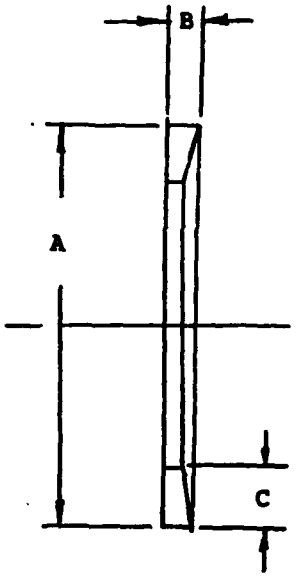

MEASUREMENT OF KRUEGER DELTA SEAL P/N 124520-1742
(FIRST SEAL)

DIM	BEFORE TEST	AFTER TEST
A	1.7406 in.*	1.743 in.**
B	0.060 in.	0.061/0.062 in.
C	0.050 in.	0.048 in.

*Not mounted; measured in free state.

** Mounted on piston with load ring expanding seal.

THIRD PRESCREEN TEST

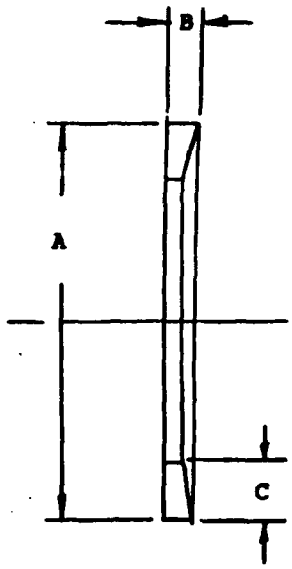

MEASUREMENT OF KRUEGER DELTA SEAL P/N 124520-1742
(SECOND SEAL)

DIM	BEFORE TEST	AFTER TEST
A	(NOT MEASURED)	1.740 in.*
B	0.060 in.**	0.058/0.060 in.
C	0.050 in.**	0.048 in.

*Not mounted; measured in free state.

** Design value; not measured.

THIRD PRESCREEN TEST

AVERAGE HARDNESS Rc 46

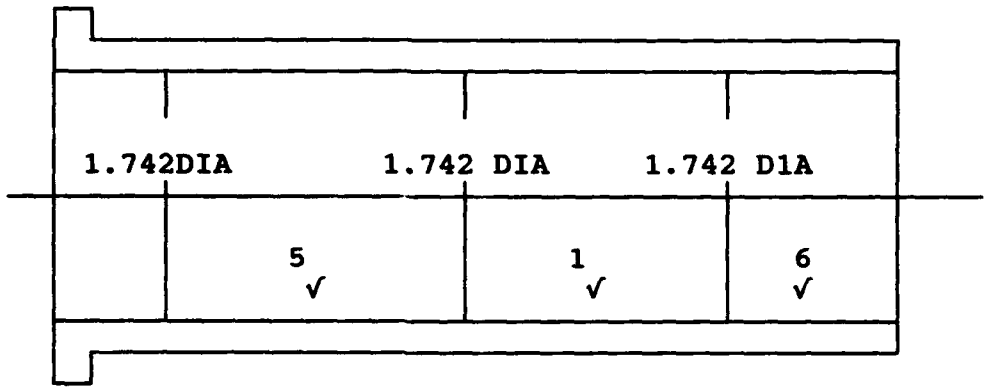

BARREL 002

BARREL DIMENSIONS AFTER TEST

SOME VISIBLE LONGITUDINAL SCRATCHES

NOTE: PISTON DIMENSIONS UNCHANGED

FOURTH PRESCREEN TEST

AVERAGE HARDNESS Rc 46

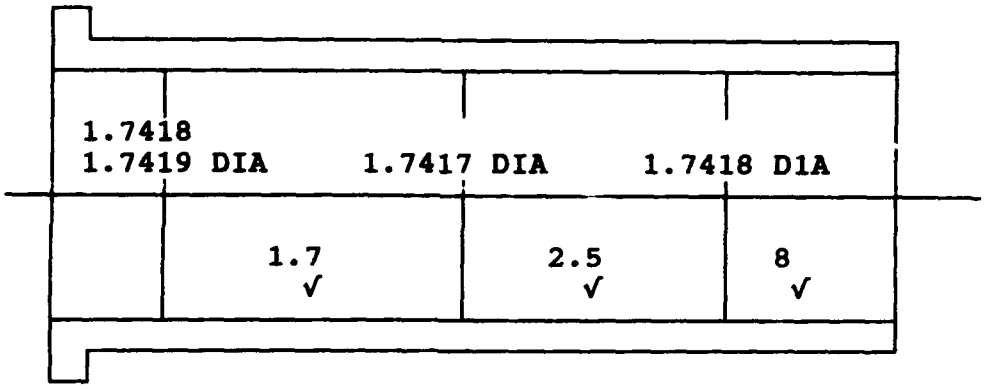

BARREL 004

BARREL DIMENSIONS PRIOR TO TEST

NOTE: THIS BARREL USED FOR REMAINDER OF PISTON SEAL TESTS

APPENDIX J

INSTRUCTIONS FOR PROVIDING SURFACE FINISH ON TEST CYLINDER BARRELS

INSTRUCTIONS FOR PREPARATION OF DRO 402832-1 TEST BARRELS

MATERIAL AND HEAT TREAT NOTES:

1. Material shall be 2-3/8 inch diameter PH13-8Mo stainless steel bars per AMS 5629, purchased in condition "A" (larger diameter stock may be substituted).

2. Following preliminary machining, heat treat to H950 per the following instructions:

   a. Vapor degrease or solvent clean with a non-film-forming solvent such a MEK or Tri-chlor.

   b. After cleaning, do not touch with hand or contaminated cloth. Handle with clean cotton gloves or cloth.

   c. Rack parts in clean racks vertically, or hang vertically.

   d. Heat in neutral atmosphere to 950°F for 4 hours, followed by air cool to room temperature. Note: part must be Rc 45 minimum after heat treat.

   e. Protect from scratches and dents during all handling and shipping operations with heavy wrapping.

FINISH INSTRUCTIONS FOR BARREL INSIDE DIAMETER

1. Rough machine I.D. to 1.690 ±0.010 in. diameter prior to heat treatment.

2. After heat treatment as noted, wet grind or hone to 1.737/1.738 inches diameter and 8-10 microinches Ra finish.

3. Finish I.D. to 1.742 ±0.0005 inches diameter and 5 microinches maximum Ra finish.

Note: If the part is ground in step 2, it is suggested that it be wet honed in step 3, with a very fine stone set, to within 0.001 inch of final diameter, then polish with a number 600 cloth or paper over the stones.

If honed in step 2, then it is suggested that the stone set be changed to very fine when within 0.003 inch of finish diameter, and completed as noted above.

Finish requirements: The inside diameter and surface finish as noted (1.742 ±0.0005 inches, 5 microinches Ra maximum)
Also, the bore must be round within 0.0005 inches. The waviness is not to exceed 0.0005 inches per side.
There shall be no visible tool marks or scratches on the bore.

APPENDIX K

TECHNIQUES USED TO PREPARE ROD SURFACES

SURFACE FINISH PREPARATION FOR DR0433410 PISTON RODS

SPECIMENS:

A quantity of four test rods were fabricated for use in the high temperature seal tests. These were identified as numbers 1, 1A, 2, and 3.

All rods were nominally 1-1/4 inches in diameter PH13-8Mo material, heat treated to Rc 45 (H950), and were nominally 9.8 inches long, with a chamfer on one end.

The actual diameter dimensions varied from the nominal in that an allowance of extra material was provided on number 3 (along with a rougher initial surface finish specification) to be used to experiment with finishing techniques. Also,rod number 2 was made slightly undersize to provide dimensional allowance for plating.

The rods were surveyed on the profileometer in the condition received and after the finishing techniques were applied.

TOOLS, MATERIALS AND TECHNIQUES USED

A saddle shaped tool, approximately 6 inches long, was fabricated to the nominal dimension of the rod diameter with an allowance for space between the rod and the finishing medium.

The rods were mounted on a lathe spindle for turning for all operations. The finishing was accomplished by placing the finishing media between the hand-held saddle tool and the rod to be finished. The lathe was started and the tool was cycled axially to produce the crosshatch finish pattern on the surface of the rod.

The abrasive media consisted of:

a. Silicone carbide paper in grits of 360 through 2000.

b. Crocus cloth (used both on the abrasive side and on the backing side as a carrier for the diamond polish).

c. Elgin diamond paste number 3, 2-4 microns particle size.

d. Kerosene was used as a lubricant and carrier.

The following pages show the "before" and "after" conditions of the surfaces, and the steps that were taken during the finish process.

Test Rod 1

Finishing steps:

1. number 600 paper at 1500 RPM
2. number 1000 paper at 1500 RPM
3. number 1200 paper at 1500 RPM
4. Crocus cloth (worn)
5. Crocus cloth (new)
6. number 3 diamond paste

BEFORE FINISHING

Ra	=	9.7	uin
Rt	=	71.2	uin
Rz	=	47.7	uin
Rtm	=	61.2	uin
Rzm	=	47.5	uin
Rp	=	29.2	uin
Rv	=	-42.0	uin
Rpm	=	22.5	uin
Rvm	=	-38.5	uin
Rsk	=	-.518	
Rk	=	2.073	
Ra	=	.000 3	in
Ram	=	.002 1	in
Rla	=	.001 8	in
Rda	=	.034	

HSC(0uin,20uin)=38
PC(05) = 342
PC(10) = 317
PC(25) = 197
PC(50) = 6
PC(500)= 0
Rtp% h (0uin)=53.6%

^Horz.Scale .0100 in/div
>Vert.Scale 10.00 uin/div +
Vert. Mag.: 20,000x
Sample Interval: 39 uin

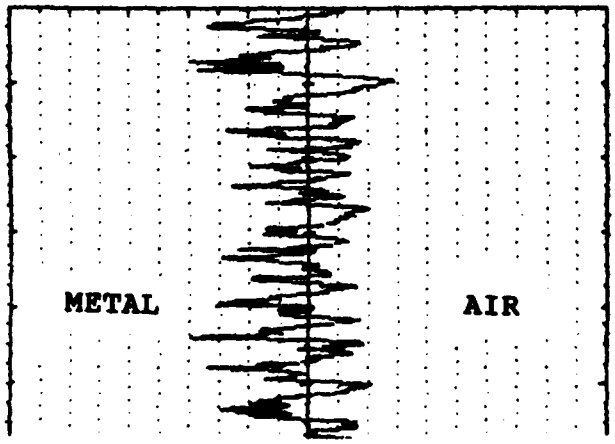

AFTER FINISHING

Ra	=	1.5	uin
Rt	=	27.2	uin
Rz	=	9.5	uin
Rtm	=	18.5	uin
Rzm	=	11.0	uin
Rq	=	2.2	uin
Rp	=	4.7	uin
Rv	=	-22.7	uin
Rpm	=	3.5	uin
Rvm	=	-15.0	uin
Rsk	=	-2.404	
Rk	=	14.982	
Ra	=	.000 1	in
Ram	=	.000 0	in
Rla	=	.000 0	in
Rda	=	.012	

HSC(0uin,2uin)=171
PC(05) = 57
PC(10) = 0
PC(25) = 0
PC(50) = 0
Rcp% h (1.5uin)=85.5%
Rtp% h (1.5uin)=14.5%

^Horz.Scale .0100 in/div
>Vert.Scale 10.00 uin/div +
Vert. Mag.: 20,000x
Sample Interval: 39 uin

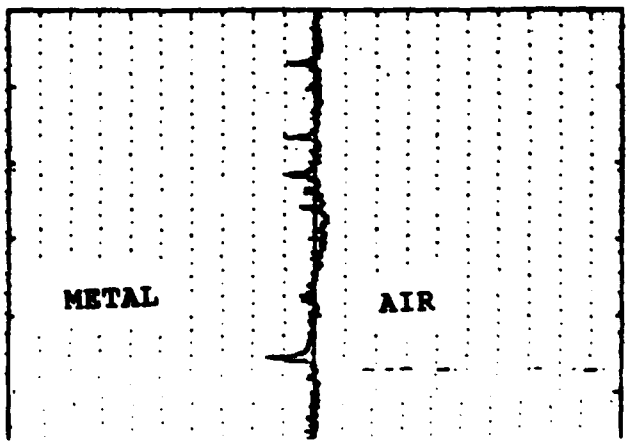

Test Rod 1A

Finishing steps:

1. number 1000 paper at 1500 RPM
2. number 1200 paper at 1500 RPM
3. Crocus cloth at 1500 RPM
4. number 3 diamond paste on the back of Crocus cloth

BEFORE FINISHING

Ra	=	10.5	uin
Rt	=	73.7	uin
Rz	=	51.2	uin
Rtm	=	64.0	uin
Rzm	=	49.0	uin
Rp	=	23.7	uin
Rv	=	-50.0	uin
Rpm	=	22.0	uin
Rvm	=	-42.0	uin
Rsk	=	-.576	
Rk	=	2.997	
Rs	=	.000 3	in
Rsm	=	.002 4	in
Rla	=	.001 8	in
Rda	=	.036	

HSC(0uin,20uin)=57
PC(05) = 330
PC(10) = 279
PC(25) = 171
PC(50) = 0
PC(500)= 0
Rtp% h (0uin)=53.3%

^Horz.Scale .0100 in/div
>Vert.Scale 10.00 uin/div +
Vert. Mag.: 20,000x
Sample Interval: 39 uin

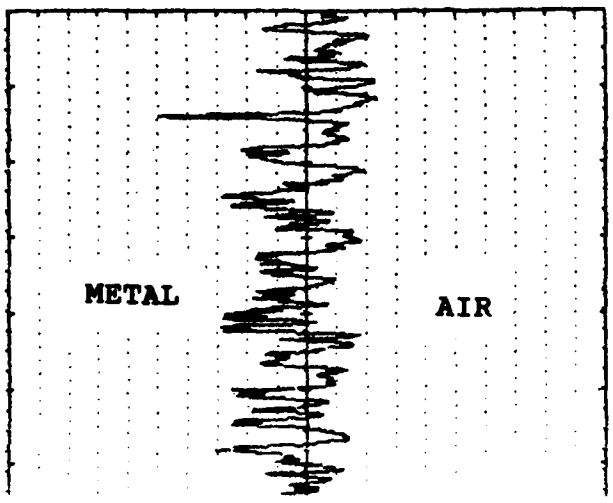

AFTER FINISHING

Ra	=	1.5	uin
Rt	=	18.8	uin
Rz	=	13.7	uin
Rtm	=	14.7	uin
Rzm	=	9.5	uin
Rq	=	2.0	uin
Rp	=	3.8	uin
Rv	=	-15.0	uin
Rpm	=	2.7	uin
Rvm	=	-12.0	uin
Rsk	=	-1.725	
Rk	=	9.374	
Rs	=	.000 1	in
Rsm	=	.000 6	in
Rla	=	.000 6	in
Rda	=	.015	

HSC(0uin,2uin)=203
PC(05) = 63
PC(10) = 0
PC(25) = 0
PC(50) = 0
Rcp% h (1.5uin)=86.4%
Rtp% h (1.5uin)=13.6%

^Horz.Scale .0100 in/div
>Vert.Scale 10.00 uin/div +
Vert. Mag.: 20,000x
Sample Interval: 39 uin

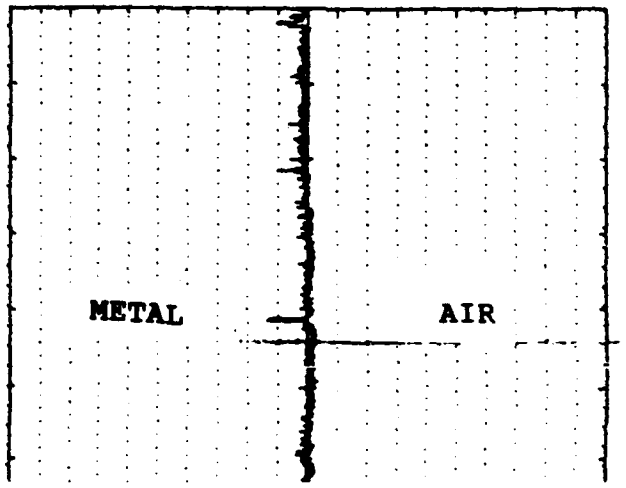

Test rod 2

Finishing steps:

1. number 600 paper at 1500 RPM
2. number 1000 paper at 1500 RPM
3. number 1200 paper at 1500 RPM
4. number 1500 paper at 1500 RPM
5. number 2000 paper at 1500 RPM

BEFORE FINISHING

Ra	=	11.5	uin
Rt	=	85.7	uin
Rz	=	54.0	uin
Rtm	=	71.7	uin
Rzm	=	57.2	uin
Rp	=	30.7	uin
Rv	=	-55.0	uin
Rpm	=	26.2	uin
Rvm	=	-45.8	uin
Rsk	=	-.520	
Rk	=	2.836	
Rs	=	.000 3	in
Rsm	=	.001 7	in
Rla	=	.001 6	in
Rda	=	.045	

HSC(0uin,20uin)=114
PC(05) = 438
PC(10) = 374
PC(25) = 216
PC(50) = 25
PC(500)= 0
Rtp% h (0uin)=51.8%

^Horz.Scale .0100 in/div
>Vert.Scale 10.00 uin/div +
Vert. Mag.: 20,000x
Sample Interval: 39 uin

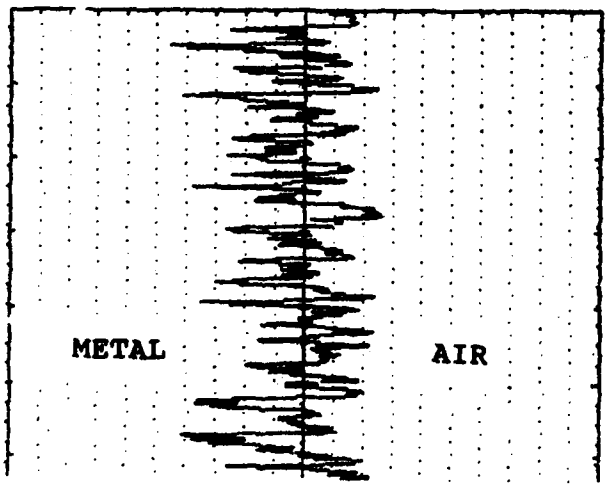

AFTER FINISHING

Ra	=	1.0	uin
Rt	=	29.7	uin
Rz	=	14.7	uin
Rtm	=	18.8	uin
Rzm	=	10.2	uin
Rq	=	2.0	uin
Rp	=	2.7	uin
Rv	=	-27.0	uin
Rpm	=	2.2	uin
Rvm	=	-16.5	uin
Rsk	=	-5.292	
Rk	=	51.134	
Rs	=	.000 1	in
Rsm	=	.000 4	in
Rla	=	.000 4	in
Rda	=	.015	

HSC(0uin,2uin)=139
PC(05) = 25
PC(10) = 0
PC(25) = 0
PC(50) = 0
Rcp% h (1.5uin)=97.4%
Rtp% h (1.5uin)=2.6%

^Horz.Scale .0100 in/div
>Vert.Scale 10.00 uin/div +
Vert. Mag.: 20,000x
Sample Interval: 39 uin

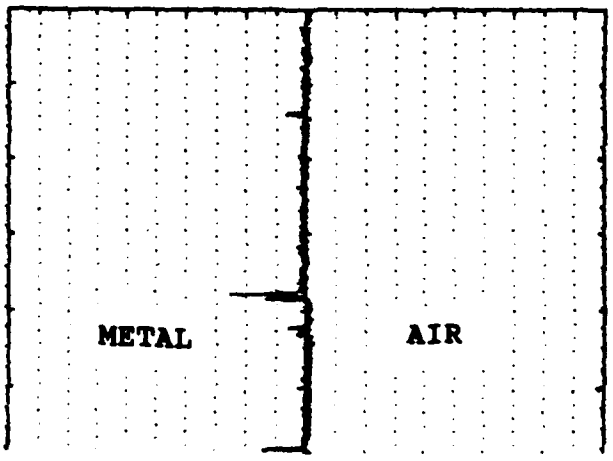

Test Rod 3

Finishing steps:

1. number 320 paper at 1500 RPM
2. Crocus cloth at 1500 RPM
3. number 3 diamond paste on the back of Crocus cloth

BEFORE FINISHING

Ra	=	13.5	uin
Rt	=	99.7	uin
Rz	=	62.0	uin
Rtm	=	86.0	uin
Rzm	=	64.5	uin
Rp	=	38.7	uin
Rv	=	-61.0	uin
Rpm	=	31.5	uin
Rvm	=	-54.5	uin
Rsk	=	-.349	
Rk	=	2.910	
Rs	=	.000 3	in
Rsm	=	.001 8	in
Rla	=	.001 9	in
Rda	=	.044	

HSC(0uin,20uin)=146
PC(05) = 399
PC(10) = 342
PC(25) = 178
PC(50) = 57
PC(500)= 0
Rtp% h (0uin)=51.9%

^Horz.Scale .0100 in/div
>Vert.Scale 10.00 uin/div +
Vert. Mag.: 20,000x
Sample Interval: 39 uin

AFTER FINISHING

Ra	=	1.5	uin
Rt	=	20.7	uin
Rz	=	6.5	uin
Rtm	=	16.7	uin
Rzm	=	9.2	uin
Rq	=	2.5	uin
Rp	=	6.0	uin
Rv	=	-22.7	uin
Rpm	=	4.0	uin
Rvm	=	-12.7	uin
Rsk	=	-2.124	
Rk	=	16.007	
Rs	=	.000 1	in
Rsm	=	.000 8	in
Rla	=	.000 9	in
Rda	=	.011	

HSC(0uin,10uin)=0
PC(05) = 51
PC(10) = 13
PC(25) = 0
PC(50) = 0
PC(500)= 0
Rcp% h (5uin)=99.3%
Rtp% h (5uin)=.7%

^Horz.Scale .0100 in/div
>Vert.Scale 10.00 uin/div +
Vert. Mag.: 20,000x
Sample Interval: 39 uin

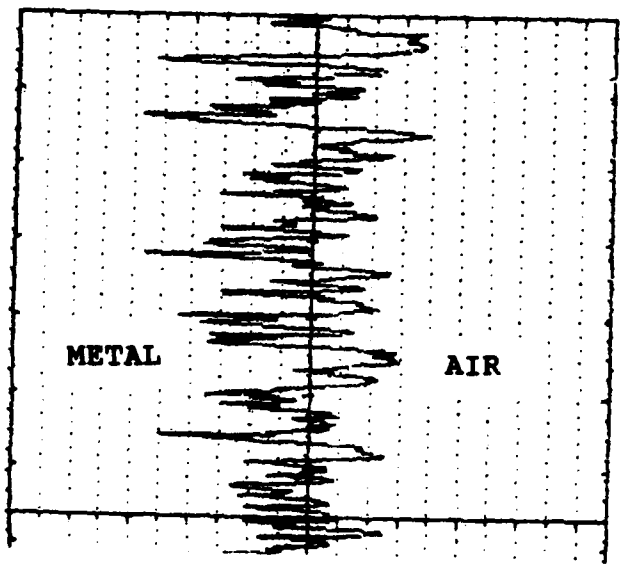

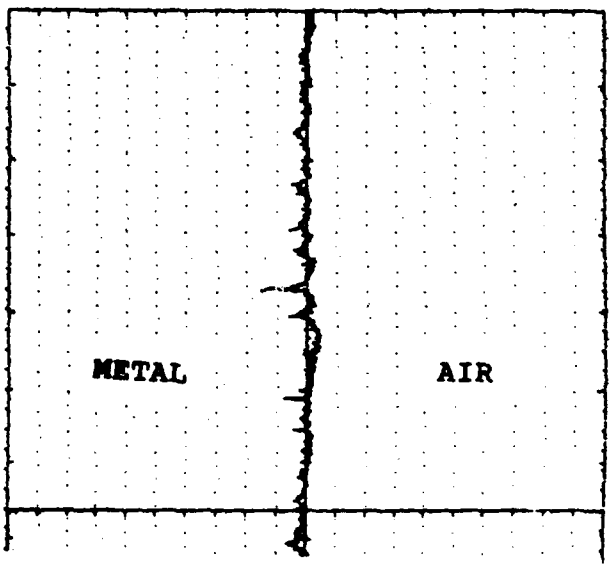

Test Rod 3 (Chamfer end)

After the previous finishing was done, an additional set of operations was done on the chamfer end only:

1. number 500 paper at 1500 RPM
2. Crocus cloth at 1500 RPM
3. 3 diamond paste on the back of Crocus cloth

BEFORE FINISHING

Ra	=	13.5	uin
Rt	=	89.7	uin
Rz	=	62.0	uin
Rtm	=	86.0	uin
Rzm	=	64.5	uin
Rp	=	38.7	uin
Rv	=	-61.0	uin
Rpm	=	31.5	uin
Rvm	=	-54.5	uin
Rsk	=	-.349	
Rk	=	2.910	
Rs	=	.000 3	in
Rsm	=	.001 8	in
Rla	=	.001 9	in
Rda	=	.044	

HSC(0uin,20uin)=146
PC(05) = 399
PC(10) = 342
PC(25) = 178
PC(50) = 57
PC(500)= 0
Rtp% h (0uin)=51.9%

^Horz.Scale .0100 in/div
>Vert.Scale 10.00 uin/div +
Vert. Mag.: 20,000x
Sample Interval: 39 uin

AFTER FINISHING

Ra	=	1.0	uin
Rt	=	15.0	uin
Rz	=	8.2	uin
Rtm	=	11.2	uin
Rzm	=	8.0	uin
Rq	=	1.5	uin
Rp	=	3.8	uin
Rv	=	-11.2	uin
Rpm	=	3.0	uin
Rvm	=	-8.2	uin
Rsk	=	-1.260	
Rk	=	7.680	
Rs	=	.000 1	in
Rsm	=	.000 5	in
Rla	=	.000 5	in
Rda	=	.013	

HSC(0uin,10uin)=0
PC(05) = 32
PC(10) = 0
PC(25) = 0
PC(50) = 0
PC(500)= 0
Rcp% h (5uin)=100%
Rtp% h (5uin)=0%

^Horz.Scale .0100 in/div
>Vert.Scale 10.00 uin/div +
Vert. Mag.: 20,000x
Sample Interval: 39 uin

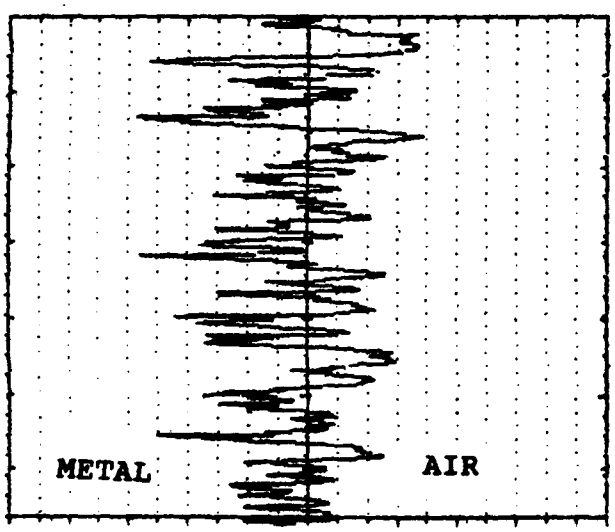

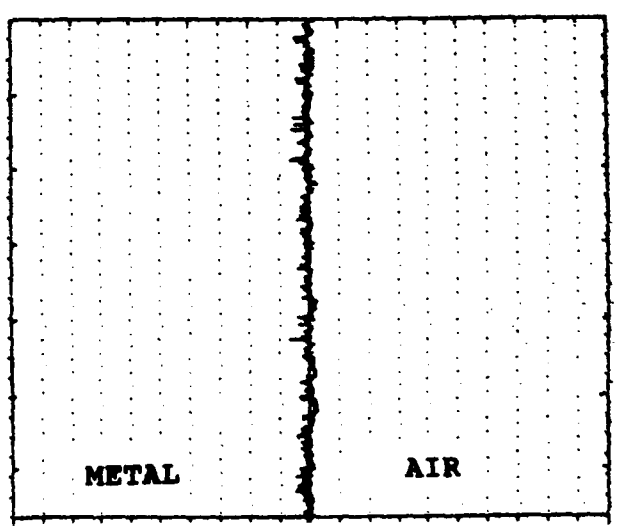

U.S. GOVERNMENT PRINTING OFFICE 750-113