DOE/ER/30172--11

DTIC
ELECTE
AUG 3 1993
S C D

AD-A267 588

Electrorheological (ER) Fluids

A Research Needs Assessment
Final Report

DISTRIBUTION STATEMENT A
Approved for public release
Distribution Unlimited

May 1993

93-17181

35 pp

Prepared For

U.S. Department of Energy
Office of Energy Research
Office of Program Analysis

Under Contract No. DE-AC02-91ER30172

This report has been reproduced directly from the best available copy.

Available to DOE and DOE contractors from the Office of Scientific and Technical Information, P O Box 62, Oak Ridge, TN 37831; prices available from (615) 576-8401.

Available to the public from the National Technical Information Service, U.S. Department of Commerce, 5285 Port Royal Rd., Springfield, VA 22161.

DOE/ER/30172--T1
UC-330,400, & 406

Electrorheological (ER) Fluids

A Research Needs Assessment
Final Report

May 1993

DTIC QUALITY INSPECTED 3

Accesion For
NTIS CRA&I ☑
DTIC TAB ☐
Unannounced ☐
Justification
By
Distribution /
Availability Codes
Dist | Avail and / or Special
A-1

Prepared For

U.S. Department of Energy
Office of Energy Research
Office of Program Analysis
Washington, D.C. 20585

Under Contract No. DE-AC02-91ER30172

EXPERT PANEL

This report has been prepared by a panel experts who have evaluated the research needs for electrorheological fluids. The project has been conducted under a contract to Consultec Scientific, Inc., Knoxville, TN from the U.S. Department of Energy, Office of Program Analysis. Dr. Irvin M. Krieger served as the Principal Investigator and Dr. Edward A. Collins served as Co-Principal Investigator. The following distinguished scientists served as members of the panel:

Irvin M. Krieger (Principal Investigator)
Department of Chemistry
Case Western Reserve University

Edward A. Collins
(Co-Principal Investigator)
Consultant

Frank E. Filisko
Dept. of Materials Science & Engineering
University of Michigan

James W. Goodwin
School of Chemistry
University of Bristol

Andrew M. Kraynik
Sandia National Laboratory

Arthur B. Metzner
Department of Chemical Engineering
University of Delaware

Philip L. Taylor
Department of Physics
Case Western Reserve University

Theo van de Ven
Pulp and Paper Research Institute of Canada

John R. Wilson
Michigan Biotechnical Institute

Kurt F. Wissbrun
Consultant

Harvel A. Wright (Program Manager)
Consultec Scientific, Inc.

Charles F. Zukoski
Department of Chemical Engineering
University of Illinois

ACKNOWLEDGMENTS

The principal investigators, the panelists, the project manager and Consultec Scientific wish to express their appreciation for the support of the Office of Program Analysis of the U.S. Department of Energy, headed by Dr. George Y. Jordy. We especially appreciate the support and assistance of F. Don Freeburn, DOE's technical manager for the project, who served diligently as liaison between the panelists and the DOE. Other DOE personnel who participated in our discussions and in reviewing drafts of the report include Duane L. Barney, Oscar P. Manley, Paul H. Maupin, Joseph M. Perez and Robert G. Rader.

Special thanks are due to the following scientists, and to their companies and institutions, for helpful discussions and advice during preparation of this report. The persons whose names appear in bold print with an asterisk served as peer reviewers; their comments and criticisms were invaluable in improving the quality and completeness of this report.

Dr. Douglas B. Adolf
Sandia National Laboratories

Dr. Robert A. Anderson
Sandia National Laboratories

Dr. Pierre Attané
Institut de Mécanique (Grenoble)

Dr. Pierre Atten
Institut National Polytechnique
(Grenoble)

Professor R. Bird
University of Bristol

Professor H. Block
Cranfield Institute of Technology

Dr. Robert Bloodworth
Bayer AG

Dr. Georges Bossis *
University of Nice

Dr. Fred P. Boyle *
RheoActive Inc.

Professor James Brady *
California Institute of Technology

Dr. D. Brooks
Advanced Fluid Systems

Professor W. Bullough
University of Sheffield

Dr. R. Buscall
ICI PLC

Mr. Rick Butters
Lord Corporation

Dr. David Carlson *
Lord Corporation

Dr. David C.-H. Cheng
Warren Spring Laboratory (retired)

Dr. Robert Cipriano *
Dow Chemical Company

Dr. Hans Conrad
North Carolina State University

Professor John Coulter *
Lehigh University

Dr. Melvin Croucher
Xerox Research Centre of Canada

Dr. Craig Davis
Ford Motor Company

Dr. Ted Duclos
Lord Corporation

Dr. H. G. Erdman
PSEG R&D Laboratory (retired)

Dr. L. F. Evans
ER Fluid Developments

Prof. Gerald G. Fuller
Stanford University

Dr. Terry J. Garino
Sandia National Laboratories

Professor Alice Gast *
Stanford University

Dr. John M. Ginder *
Ford Motor Company

Dr. Kenneth C. Haas
Ford Motor Company

Professor Thomas Halsey
University of Chicago

Dr. Dale Hartsock *
Ford Motor Company

Dr. Hiroshi Hasegawa
Toyota Motor Corporation

Dr. D. M. Heyes
University of Surrey

Dr. Akio Inoue
Asahi Chemical Industry Co. Ltd.

Dr. Yuichi Ishino
Bridgestone Corporation

Dr. Wayne Johnson
Dow Chemical Company

Prof. Sangtae Kim
University of Wisconsin

Prof. Daniel J. Klingenberg
University of Wisconsin

Dr. V. G. Kulkarni
Americhem Inc.

Dr. Ronald G. Larson *
Bell Laboratories

Dr. Albert Magnin
Institut de Mécanique (Grenoble)

Professor Gerald D. Mahan *
University of Tennessee

Dr. Kunio Maki
Nissan R&D Technical Center

Dr. Gerwig Marquardt
Bayer AG

Dr. James E. Martin
Sandia National Laboratories

Dr. T. McLeish
University of Sheffield

Dr. J. R. Melrose
University of Surrey

Dr. Keishi Negita
Nissan Motor Co. Ltd.

Dr. J. Oliver
Xerox of Canada Research Laboratory

Professor J.-M. Piau
Institut de Mécanique (Grenoble)

Dr. N. M. Ratcliffe
University of West of England

Dr. Gene Rose
Dow Chemical Company

Prof. William B. Russell
Princeton University

Dr. Randall G. Schmidt
Dow Corning Corporation

Dr. Manfred Schulze
Bayer AG

Scientist
Anonymous automotive industry

Professor Montgomery L. Shaw *
University of Connecticut

Dr. Annette D. Shine
University of Delaware

Dr. James Spearot *
General Motors Research

Dr. Arnold F. Sprecher
North Carolina State University

Dr. J. Stangroom
ER Fluid Developments

Dr. Siegfried Storp
Bayer AG

Dr. Rongjia Tao
Southern Illinois University

Mr. David Thomas
Lord Corporation

Professor B. Vincent
University of Bristol

Professor Lee R. White
University of Melbourne

Dr. Charles E. Wilkes *
GenCorp Automotive

Dr. Claude Wolff
Embassy of France (Washington, D.C.)

Dr. Bing-Chang Xu
Ford Motor Company

Dr. I.-K. Yang
University of Delaware

Professor Ernest B. Yeager
Case Western Reserve University

TABLE OF CONTENTS

PART ONE: EXECUTIVE SUMMARY 1-1

PART TWO: INTRODUCTION

2.1 Definitions 2-1
2.2 Technological Importance 2-1
2.3 History of ER Fluids 2-1
2.4 Background and Objectives of this Study 2-2
2.5 Plan of Investigation 2-3
2.6 Prior Surveys 2-3
2.7 ER Research in other Countries 2-4
2.8 Organization of this Report 2-5

PART THREE: OVERVIEW OF ELECTRORHEOLOGY

3.1 ER Technology 3-1
3.2 Characteristics of a Good ER Fluid 3-2
3.3 Theories of the ER Effect
3.3.1 Qualitative Theory 3-4
3.3.2 Mechanisms of Polarization 3-5
3.4 ER Materials 3-5
3.5 Rheometry of ER Fluids 3-5
3.6 Stability of ER Fluids
3.6.1 Colloidal Stability 3-6
3.6.2 Stability with Respect to Settling 3-7
3.6.3 Thermal Stability 3-7
3.6.4 Mechanical Stability 3-7
3.6.5 Electrical Stability 3-7
3.6.6 Morphology 3-7
3.7 ER Research and Development Worldwide 3-7
3.8 Energy Considerations 3-10

PART FOUR: RECOMMENDATIONS

4.1 Mechanisms of ER Phenomena
4.1.1 Interaction Mechanisms 4-1
4.1.2 Filamentation 4-2

4.2 Improvement of ER Fluids
4.2.1 Size, Shape and Distribution 4-3
4.2.2 Structured Particles 4-3
4.2.3 Single-Phase Systems 4-3
4.2.4 Control of Sedimentation 4-3
4.2.5 Activators 4-4
4.3 Understanding of Rheological and Electrical Properties
4.3.1 Rheological Properties 4-5
4.3.2 Electrical Properties 4-5
4.4 Development of Design Methodology
4.4.1 Specifications and Testing 4-6
4.4.2 Systems Approach to Design 4-6
4.4.3 Catch 22 4-7

PART FIVE: PANELIST REPORTS

5.1 ER Fluid Devices and Energy Savings 5.1-1
John R. Wilson

5.2 Who's Who in ER Research and Development 5.2-1
Edward A. Collins

5.3 Mechanisms of ER Effects 5.3-1
Charles F. Zukoski

5.4 Cooperative Aspects of ER Phenomena 5.4-1
Philip L. Taylor

5.5 Modeling and Simulation of ER Fluids 5.5-1
Andrew M. Kraynik

5.6 Rheological Characterization of ER Fluids 5.6-1
James W. Goodwin

5.7 ER Fluid Mechanics 5.7-1
Arthur B. Metzner

5.8 Comparisons Between Electro-Optical and ER Effects 5.8-1
Theo van de Ven

5.9 Materials Aspects of ER Fluids 5.9-1
Frank B. Filisko

5.10 Potential Application of Liquid Crystals as ER Fluids 5.10-1
Kurt Wissbrun

5.11 Steric Forces 5.11-1
James W. Goodwin

5.12 Stability of ER Fluids 5.12-1
Theo van de Ven

5.13 Long-Term Stability of ER Devices 5.13-1
Kurt Wissbrun

PART SIX: ER RESEARCH AND DEVELOPMENT IN OTHER COUNTRIES

6.1 The Former USSR 6.1-1
Eugenia Korobko

6.2 The United Kingdom 6.2-1
James W. Goodwin

6.3 Four Companies in Japan 6.3-1
Frank Filisko

6.4 The Peoples Republic of China 6.4-1
Yuan-Ze Xu

6.5 France
6.5.1 ER Research in France 6.5-1
G. Bossis
6.5.2 University of Grenoble 6.5-4
Irvin M. Krieger

6.6 Germany: Bayer AG 6.6-1
Irvin M. Krieger

PART SEVEN: EXTENDED BIBLIOGRAPHY

7.1 ER Literature (1949-1992) 7.1-1

7.2 ER Patents, Devices and Fluids (1947-1992) 7.2-1
7.2.1 ER Device Patents (1947-1991) 7.2.1-1
7.2.2 ER Fluid Patents (1962-1991) 7.2.2-1
7.2.3 Energy-Related ER Patents 7.2.3-1
7.2.3.1 Devices 7.2.3.1-1
7.2.3.2 Fluids 7.2.3.2-1

APPENDICES

A. Statement of Work ..... A- 1

B. Visits and Contacts
1. Dr. Hans Conrad ..... B- 1
2. RheoActive, Inc. ..... B- 4
3. Professor Ernest B. Yeager ..... B- 7
4. Dr. Vaman G. Kulkarni ..... B- 8
5. Lord Corporation ..... B- 9
6. Xerox of Canada B-12
7. Ford Motor Company B-13
8. Dow Chemical Company B-16
9. Anonymous Automotive Industry Source B-18
10. Professor Lee R. White B-20

C. Nomenclature ..... C- 1

ELECTRORHEOLOGICAL FLUIDS: A TECHNOLOGICAL ASSESSMENT STUDY

PART ONE: EXECUTIVE SUMMARY

In 1947, Willis Winslow was awarded a U.S. patent on "Methods and Means for Translating Electrical Impulses Into Mechanical Force". Winslow's patent makes use of an electrorheological (ER) fluid, *i.e.*, one which is transformed from a liquid into a viscoelastic solid upon application of a strong electric field. Based on this gelation effect, a whole new technology has been proposed, providing novel and efficient ways to control fluid flow and power transmission, and to reduce energy loss and damage due to vibration and oscillation. A large number and variety of ER devices have been invented; they are described in publications and patents, and many exist as prototype and demonstration devices.

ER devices such as shock absorbers, valves, transmissions and fluid couplings are more energy-efficient than hydraulic, mechanical or electromechanical devices which serve the same function. The power needed to operate an ER device is usually very low compared to the power controlled by the device, and its response can be almost instantaneous. With modern control circuitry, an ER device can be made to respond rapidly and flexibly to changing situations.

Yet, in spite of the great potential of ER technology, and in spite of the hundreds of patents which have been issued over the past 45 years, no commercial ER devices have reached the marketplace to date.

The potential of ER technology to improve energy efficiency and reduce fuel consumption has attracted the interest of the U.S. Department of Energy (DOE). As stated by Dr. Frederick P. Boyle of RheoActive, Inc.:

> "ER has the potential of being the most energy-efficient electromechanical interface, with the features of reasonable cost, compactness, fast response, durability and continuously-variable wide dynamic range. These properties cannot currently be achieved by any alternative electromechanical interface."

The DOE believes that the failure of this promising technology to reach the marketplace means that there are serious deficiencies in our understanding of the materials and mechanisms responsible for the ER effect. The present year-long study has been commissioned by the DOE to identify the gaps in our grasp of ER science and technology, and to recommend research areas whose investigation can close these gaps.

This study was conducted by a 12-man panel operating under a contract let by the DOE to Consultec Scientific, Inc. of Knoxville, Tennessee. Each panelist undertook to draft one or more specialist reports, and to contact outside experts as assigned. The panel met twice with DOE officials: once to review and refine its charge and objectives, and again, after the

panelists had carried out their individual assignments and drafted their reports, to identify and prioritize research needs. The Co-Principal Investigator assembled an extended bibliography of patents and publications, and the Principal Investigator undertook the tasks of organizing and editing the report and of writing the Introduction and Overview sections.

The panel identified three main aspects of ER technology: (1) the ER device, (2) the ER fluid, and (3) the power/control circuitry. Many of the devices which have been proposed and tested are sound and well conceived. Although the problems associated with high-speed switching at high voltages are far from trivial, modern solid-state electronics and computerized controls should be able to satisfy the requirements of ER technology. Our considered opinion, and that of the experts we consulted, is that the limiting factor is the ER fluid. The recent spate of Japanese patents on new ER fluid compositions strengthens this conclusion.

To exhibit a strong ER effect, the fluid must undergo a transition induced by the electric field from a liquid of low viscosity to a gel-like solid. The only systems which exhibit the desired ER effect are either concentrated dispersions of particles in a dielectric medium, or special polymeric fluids. To produce an ER transition, a very strong electric field is needed, whose strength is measured in kilovolts per millimeter (kV/mm). The individual particles become polarized by the field and align themselves into chains and filaments which span the gap between the electrodes which supply the field. It is this filamentary structure which is responsible for the gelation. To cause this structure to flow, stresses must be applied which rupture the filaments. The minimum stress needed t cause flow is called the yield stress, and its magnitude is roughly proportional to the square of the field strength. The amount of force which an ER device can transmit depends upon its yield stress.

With such strong electric fields, the ER fluid itself must be a poor conductor of electricity; otherwise power consumption and Joule heating would be excessive. This requirement rules out aqueous systems (*i.e.*, with water as the suspending liquid). This is unfortunate, since aqueous dispersions can often be stabilized against gravitational settling through the presence of chemically bound or adsorbed charges on the particle surfaces. Dispersions in dielectric media (*i.e.*, liquids of low dielectric constant and low conductivity) are more difficult to stabilize. The tendency of the particles in an ER fluid to settle under gravity is one of several important obstacles to the commercialization of ER devices.

Aside from instability with respect to settling, other sources of instability plague the development of suitable ER fluids. For automotive use, the ER fluid must remain usable over a very wide temperature range, typically from -30 to 100C, and, in extreme cases, from -50 to 150C. It must remain stable and usable over the expected lifespan of the vehicle, *i.e.*, for up to 10 years, in the face of chemical action and particle attrition.

Our research recommendations fall under four thrust areas; we believe that successful accomplishment of the recommended research will solve the most serious problems which have impeded the commercialization of ER technology. Three of these thrust areas focus on the ER fluids themselves, because this is where the key problems lie. The fourth thrust area concerns the integration of fluid, device and control circuitry into a functioning system. The four thrust areas are described in the following paragraphs.

1. **Mechanisms of ER Phenomena**

Our current qualitative understanding of how the ER effect is produced is insufficient to guide us in developing ER fluids which will satisfy the demands of commercializable devices. As a necessary first step in improving ER fluids, we need a more profound understanding on the quantitative level.

2. **Improvement of ER Fluids**

In spite of recent exciting developments in ER fluids, including ER fluids which are virtually anhydrous, we still need substantial improvement in several key properties.

- Low power requirement over a wide operating temperature range
- Fast response time
- High mechanical strength (magnitude of the yield stress)
- Better stability with respect to settling
- Longer-term stability against thermal and mechanical degradation

3. **Understanding of Rheological and Electrical Properties**

At this point, we are still learning which rheological properties of these complex fluids are important to measure, and how to make and interpret the measurements. Furthermore, we need the ability to predict key properties like yield stress and conductivity, based on structural variables (*e.g.*, particle size; electrical properties of particles and medium) and on experimental conditions (*e.g.*, field strength; temperature).

4. **Development of Design Methodology**

A systems approach must be developed for the design of ER devices, based on (a) the function and purpose of the device, (b) the known and specified properties of the available ER fluids, and (c) the power and control requirements of the particular device. Development of systematic methods and procedures will greatly accelerate the pace of application of ER technology.

These four thrust areas are amplified in Part 4, where specific research needs are identified. The first three areas - those concerned with the fluids themselves - have attracted the attention of a number of well qualified academic researchers, although very little funding is currently available to support their studies. The fourth thrust area is the key to transferring technology from research papers, patents and prototypes into commercial products.

In addition to fulfilling its charge of identifying research priorities, the panel would like to make one recommendation directed toward speeding the application of ER technology in the U.S. What we see is a scenario where (1) no device can be marketed until a commercial fluid is available, while (2) no commercial fluid can be developed until a large-volume market is assured. Some way must be found to overcome this "Catch 22" situation.

ELECTRORHEOLOGICAL FLUIDS: A TECHNOLOGICAL ASSESSMENT STUDY

PART TWO: INTRODUCTION

2.1 Definitions

Electrorheological (ER) fluids are defined as fluids which undergo a strong reversible increase in viscosity upon application of an external electric field. Although some pure liquids exhibit weak field effects, those fluids which exhibit ER effects strong enough to be of technological interest are either dispersions of particles in dielectric media or else they are special polymeric systems. ER solids are also known, consisting of particles dispersed in elastomeric media. Since the fields which are needed in order to produce large viscosity changes are measured in kilovolts per millimeter (kV/mm), practical ER fluids must be poor conductors of electricity.

In the continental European literature, the term "electroviscous" (EV) is sometimes used instead of "electrorheological". In U.S. and British literature, the term "electroviscous" is reserved for the rheological effects of internal electric fields, arising from charges on the particles and modified by the presence and distribution of free ions.

Magnetorheological (MR) fluids undergo strong rheological changes upon application of a magnetic field. Although they show many similarities to ER fluids in both function and applications, MR fluids were not included in the scope of this report because of limitations in time and funding.

2.2 Technological Importance

Proposed applications of ER fluids are both numerous and of enormous potential value. They include electrically controlled clutches, valves, hydraulic systems and damping devices, as well as systems to control the elastic response of structural members. ER devices are generally simpler to construct and to control than their hydraulic or electromechanical counterparts and require far less power. In most instances, ER fluids respond so rapidly to both application and cessation of the electric field that response times do not become limiting factors in device design. The applications of greatest commercial interest are in the transport industry - automotive, air and marine - where applications of ER technology could result in large savings in fuel and energy.

2.3 History of ER Fluids

The strong ER effect has been widely known ever since Willis Winslow (Winslow 1947) filed a patent in 1942 on "Method and Means for Translating Electrical Impulses Into Mechanical Force". Since 1947, Winslow and others have secured a series of patents on ER devices and

on ER fluid compositions. Although industrial and academic interest in ER fluids has waxed and waned several times during the past 50 years, it is significant that ER devices are virtually nonexistent in the marketplace. This is generally attributed to the unavailability of ER fluids possessing the necessary strength, stability and durability.

Although nonconducting media are required for practical ER fluids, all of the early ER fluids contain some water, which appears to be necessary for these dispersions to function as ER fluids. The presence of water increases Joule heating and power consumption, and the sensitivity of ER properties to moisture content makes these fluids susceptible to chemical, electrochemical and thermal degradation. Recent renewed interest in ER technology has been sparked by the development of anhydrous ER fluids of various types.

2.4 Background and Objectives of this Study

In September of 1990, the U.S. Department of Energy (DOE) issued a Request for Proposal (RFP) for a technological assessment study of research needs in ER fluids. Consultec Scientific, Inc. of Knoxville, Tennessee responded to the RFP. Dr. Harvel Wright, Consultec's President, asked Irvin M. Krieger as Principal Investigator (PI) and Edward A. Collins as Co-Principal Investigator (Co-PI) to assemble a prospective panel of experts and to draft a proposal in response to the RFP. The Principal Investigator had been chosen for his broad academic background in dispersion rheology, and because he has led several prior technological assessment studies. The Co-Principal Investigator has broad industrial experience in polymer rheology and is a recognized authority on ER fluids and devices. The panel includes both industrial and academic experts on the physics, chemistry and engineering of ER fluids and devices.

Panelists

Frank B. Filisko	Dept. of Materials Science & Engineering, University of Michigan
James W. Goodwin	School of Chemistry, University of Bristol, Great Britain
Andrew M. Kraynik	Sandia National Laboratories
Arthur B. Metzner	Department of Chemical Engineering, University of Delaware
Philip L. Taylor	Department of Physics, Case Western Reserve University
Theo van de Ven	Department of Chemistry, McGill University
John R. Wilson	Michigan Biotechnical Institute
Kurt Wissbrun	Consultant
Harvel Wright	Consultec Scientific, Inc.
Charles F. Zukoski	Department of Chemical Engineering, University of Illinois

Dr. Wright was designated as Program Manager (PM) for the project.

On September 30, 1991 the DOE gave Consultec a contract for a one-year study. The purpose, objectives and work activities of this study are spelled out in detail in the contract (see the Statement of Work, Appendix B). The DOE's charge to the panel was subsequently discussed and refined at a meeting between DOE personnel and the full panel, held in Bethesda on December 16-17, 1991.

The DOE sees great potential in ER technology to reduce fuel and energy consumption. The very fact that this promising technology has resisted exploitation for some 50 years has convinced the DOE that we do not adequately understand its scientific basis. Therefore, the main charge from the DOE to this study panel is to identify and prioritize the research which is needed to develop and enhance our basic understanding of ER phenomena.

2.5 Plan of Investigation

Each panelist accepted two assignments: (1) to contact designated experts and seek their input on research needs and energy considerations, and (2) to draft one or more sections for this report. Twice during the study period, the entire panel held two-day meetings with DOE personnel. The main subject of the first meeting was objectives and plans for carrying out the study; the second meeting was devoted to presenting the panelists' findings and to identifying and prioritizing research needs.

The panel first assessed the present state of the science and technology of ER materials. Several such assessments had been conducted within the past four years, and these provided valuable source material. However, the present study focuses on two aspects which have not previously been adequately treated: (1) research needs and (2) energy considerations. The panel reviewed the literature and consulted with experts around the world. The next step was to identify important gaps in our knowledge of ER science and technology, and to recommend research programs to obtain the knowledge to fill in these gaps. Finally, the panel assigned priorities to the research programs and recommended four research areas of highest priority.

2.6 Prior Surveys

There have been a number of recent surveys on ER technology, carried out for the most part under the auspices of firms which specialize in technological analyses. Not all of them are available to the general public.

SURVEYS ON ER FLUIDS

"Business Opportunities in ER Fluids and Devices", Technology Catalysts, 6073 Arlington Blvd., Falls Church, VA 22044. A multi-client report (Sept. 1988).

"Smart Fluids - New Route to Advanced Hydraulic Systems/Devices", Emerging Technologies No. 35. Technical Insights, Inc., Englewood/Fort Lee, NJ (1990).

"Small Materials and Structures Technologies: The Impending Revolution", prepared by Hy-Tech International, published by Technomic Publishing, 851 New Holland Ave., Box 3535, Lancaster PA 17604.

"Smart Fluids Technology", an impact report by Frost & Sullivan, Inc. (Fall 1990).

"Conductive Polymers", an impact report by Frost & Sullivan, Inc. (Fall 1991).

"Survey Report on Smart Materials" prepared by Smart Fluids Research Committee, T. Mita, Chairman (in Japanese, translation available through DOE), MITI (1991).

In addition, there have been several recent conferences on ER fluid technology. In some cases the complete proceedings are in print; in other cases, only the abstracts are available.

PROCEEDINGS OF RECENT CONFERENCES ON ER FLUIDS

Proceedings of the First International Symposium on ER Fluids, Aug. 4, 1987 in Boston, MA. North Carolina University Engineering Publications, Raleigh NC 27695. Edited by H. Conrad, J. D. Carlson and A. F. Sprecher (August 1989).

Proceedings of the Second International Conference on ER Fluids, Aug. 7-9, 1989. Edited by J. D. Carlson, A. F. Sprecher and H. Conrad. Technomic Publications (1990).

U.S.-Japan Workshop on Smart/Intelligent Materials and Systems, Mar. 19-23, 1990 in Honolulu, Hawaii. Proceedings published by Technomics Publishing.

Symposium on ER Fluids, Society of Rheology Annual Meeting, Santa Fe, NM, Oct. 1990. Partial publication in *J. Rheology* 35 No. 7 (October 1991).

Proceedings of the Third International Conference on ER Fluids, October 15-16, 1991 at Southern Illinois University, Carbondale IL. Published as "Electrorheological Fluids: Mechanisms, Properties, Structure, Technology and Applications", R. Tao (editor), World Science Publishers (1992).

The Society of Rheology Annual Meeting, Oct. 21-24 in Rochester, NY also contained a session on ER technology. Abstracts available in the Society's *Rheology Bulletin* (1991).

2.7 ER Research in Other Countries

Although the panel was charged with identifying and describing new and promising developments "on a world-wide basis", limitations on travel funds made extensive personal consultations with overseas experts impractical. Panelist James W. Goodwin took advantage of his UK residency to contact the leading British experts. Other panelists were able to combine visits to experts in Germany, France, Japan and Australia with other travel commitments. Panelist Frank E. Filisko brought back from his visit to Japan a 1990 report by the Smart Fluids Research Institute of Tokyo on "Developments in ER Fluids", written in Japanese. DOE's Office of Program Analysis arranged to have this valuable document translated for us.

We were able to commission Dr. Eugenia Korobko, one of many distinguished experts in the former USSR, to prepare an extensive report on "The State of the Art of ER Studies in the Former USSR". We learned that Dr. Yuan-Ze Xu, head of the Rheology Laboratory of the Academica Sinica (Chinese Academy) was serving during the study year as a Visiting Scientist in the U.S., and asked him to prepare a report on ER activities in The People's

Republic of China. We were fortunate that the distinguished French rheologist Claude Wolff was the newly appointed Scientific Counsellor to the Embassy of France in Washington; Dr. Wolff was able to identify for us the leading ER researchers in France. After reviewing a draft of this manuscript, Dr. Georges Bossis of the University of Nice wrote a brief report on ER research in France; with his generous consent, we have included Dr. Bossis's report in this final version.

2.8 Organization of this Report

The report consists of seven sections: (1) Executive Summary, (2) Introduction, (3) Overview, (4) Recommendations, (5) Panelist Reports, (6) Overseas Research and Development, and (7) Extended Bibliography. The Appendix contains the reports of site visits and contacts and other supplementary documents.

The **Overview** presents a concise picture of the present state of ER science and technology and identifies the gaps in our knowledge which require further research. The discussion draws heavily on the **Panelist Reports** for amplification and justification. Following the **Overview** are prioritized **Recommendations** of the areas of research which need to be pursued in order to provide the knowledge base for technological advancement.

The **Panelist Reports** are 13 self-contained articles on important areas of ER science and technology, written by the panelists and based on their experience, their reading of the literature, and on consultations with colleagues and selected experts. The **Overview** and **Recommendations** sections are based in large part on the material presented in the Panelist Reports.

The first panelist report, by John R. Wilson, surveys and classifies the gamut of ER devices which have been proposed for commercialization. He discusses their market potential and their potential to reduce the consumption of energy and fuel. The second report, by Edward A. Collins, identifies the key industrial and academic institutions engaged worldwide in ER research and development. The next six panelist reports deal with the physics of ER fluids. Charles Zukoski reviews the state of our knowledge of the mechanism of the ER effect. Philip Taylor considers the ER transition as a cooperative phenomenon. Andrew Kraynik discusses the various approaches taken to model the behavior of ER fluids using computerized simulation methods. James Goodwin reviews methods for characterizing the rheological properties of fluids, as they apply to ER fluids. Arthur Metzner points out the deficiencies of conventional fluid mechanics in treating an anisotropic fluid subjected to an energy field. Theo van de Ven looks at similarities and differences between ER phenomena and electro-optical phenomena, and points out ways in which our knowledge of electro-optics can be used to advantage in ER research.

The next two reports deal with the chemistry of ER fluids. Frank Filisko surveys the different materials which have been found useful in formulating ER fluids, with special attention to systems containing no free water. He attempts to identify the most promising materials for future progress in ER technology. Kurt Wissbrun reviews the potential of liquid-crystalline systems, in which the annoying problem of settling is absent, to serve as practical ER fluids.

Three reports are devoted to various aspects of the stability of ER fluids. Theo van de Ven and James Goodwin discuss different aspects of the colloidal stability of ER fluids: Van de Ven's report is a review of colloidal stability, while Goodwin concentrates on steric stabilization, which is the form of stabilization most useful in dielectric media. In the final report, Kurt Wissbrun looks at the long-term stability of ER devices, identifying the various causes of instability and failure.

ER Research and Development in Other Countries is a section which presents progress in ER technology on a world-wide basis. It contains surveys of work in the former USSR and in The Peoples Republic of China, written specially for this report by outstanding experts from the respective countries. Our British panelist, James W. Goodwin, reports on visits and contacts with the leading researchers in the United Kingdom. Another panelist, Frank B. Filisko, reports on four Japanese corporations which lead that country in ER technology. Visits were also made to important laboratories in Germany, France, Canada and Australia.

The **Extended Bibliography** contains a carefully selected listing of publications and patents on ER fluids and devices. Drawn from a computerized and cross-referenced data base compiled by Co-PI Edward A. Collins, this Extended Bibliography contains titles and authors of publications from 1947 through 1991 and of patents from 1967 through 1991. Separate printouts are provided for those devices and fluids which have special potential to reduce consumption of energy and fuel. Many references to the Russian literature which were not accessible at the time of the compilation appear in Section 6.1, which covers research in the former USSR. A number of very important papers appeared after compilation of the Extended Bibliography was completed; many of these are cited in the reference lists following individual sections of this report.

A strong effort was made to keep nomenclature uniform throughout the report. However, in view of the multiple authorship, this was not always feasible. A list of symbols used is provided as **Appendix C: Nomenclature.**

An **Executive Summary** precedes the report. In a few brief pages, it presents the conclusions and recommendations which are the result of this year-long study.

PART THREE: OVERVIEW OF ELECTRORHEOLOGY

3.1 ER Technology

There are three aspects to ER technology: (1) devices, (2) fluids, and (3) controls. The patent literature describes a large number of ER devices which have important commercial potential, and many of these devices have been demonstrated effectively in prototype. The range of ER fluids which have been produced is also extensive, with various combinations of fluid, particle and stabilizer. Given the present status of solid-state electronics and control circuitry, there should be no obstacle to meeting the requirements of ER devices for actuating power and controls. We must then ask the question: "Why is it that no ER applications have as yet reached the commercial market?"

The most common answer to this question is that the ER fluids which are currently available, while adequate for demonstration and prototype devices, do not meet the stringent specifications for inclusion in commercial devices. This answer is somewhat simplistic, however. Proper design of an ER application should use a systems approach, where the device, the fluid and the power/control system function as a unit. It is universally recognized that no single ER fluid will meet the requirements of all ER devices; each application makes different demands on the ER fluid. With this in mind then, it seems hardly credible that none of the many fluids which have been developed has been found suitable for even one of the many different devices which have been proposed.

The largest projected market for ER devices is the automotive industry where, unfortunately, the demands are severest for stability, durability, temperature range, environmental compatibility and low cost. Furthermore, the economic risk of lawsuits and recalls which this industry faces when introducing new technology is formidable. Proposed applications which are less exacting than those in the automotive industry can not generate the volume of demand for ER fluids that will justify extensive research, development and capital investment. The unavailability of commercial ER fluids is what stands in the way of the development of devices whose market potential is small or moderate.

It appears therefore that market forces as well as technological problems are responsible for the slow commercialization of the ER effect. In the western market economy, the necessary scope and level of research and development can be supported only by large corporations. In almost all cases, the corporations which are or might be engaged in device development are different from those which are or might be engaged in developing ER fluids. (Two exceptions are Lubrizol and the Lord Corporation.) The major source of profits is expected to be the ER devices themselves, but ER devices will not be marketed until ER fluids are available which meet all specifications. What we have is a "Catch 22" situation. (The Russian literature, extensively reviewed in Part IV, contains many examples of the practical application of ER devices. Here we have a rare example of where a socialist economy may

have the advantage over a free-market economy in transferring technology from the laboratory to the workplace.)

This panel has neither the charge nor the competence to deal with problems of economics and marketing. The major scientific and technological obstacles to commercializing ER technology lie in the fluids themselves, and this is where we focus our attention.

3.2 Characteristics of a Good ER Fluid

ER fluids must have certain properties if they are to function at all, and certain additional properties in order to satisfy the needs of practical applications. To survive the high electric fields needed to produce an appreciable ER effect, ER fluids must have very low electrical conductivity and high dielectric breakdown strength. To produce a strong ER effect, the fluids must undergo a field-induced transition from liquid-like to solid-like behavior. In other words, the field must induce gelation of the fluid.

The effect of strong electric fields on viscosities of liquids, whether pure or multi-component solutions, is far too small to be of practical use. Simple liquids alone do not undergo the kind of field-induced gelation which is needed. Until very recently, only dispersions of solid particles in liquid dielectric media have been found to produce ER effects of practical importance. Here a strong electric field transforms a fluid dispersion of more-or-less random structure into a solid-like material, by aligning the particles into chains which span the gap between electrodes. Section 5.9 describes ER activity of liquid-crystalline polymers, where a similar field-induced alignment can take place. These systems are promising alternatives to dispersions as ER fluids, but they have not yet been tested in ER devices.

Dispersions of particles in liquids have an unfortunate tendency to settle in gravitational and centrifugal fields. Settling can be virtually eliminated by matching density of particle and medium, but a perfect match can be achieved only at a single temperature, since the thermal expansion coefficients of particle and medium will not generally match. In many applications, limited settling can be tolerated, so long as it does not produce irreversible coagulation. In the absence of electrical charges or protective agents, particles will tend to cohere on contact, sometimes irreversibly. Charge stabilization can keep the particles apart, but this is most easily achieved in aqueous dispersions or dispersions in other media of high dielectric constant; unfortunately, such systems have electrical conductivities far too high for practical ER fluids. Substantial protection against cohesion can be achieved, even in dielectric media, through adsorption of surfactants or polymers on the particle surfaces.

In colloidal dispersions, Brownian motion of the submicron particles combats the tendency to settle under gravitational or centrifugal forces. However, reduction in particle size adversely affects other ER properties, such as yield stress and response time. Furthermore, the randomizing nature of Brownian forces works against the aligning forces of the electric field, weakening the ER effect. For this reason, particle sizes for practical ER fluids tend to be large enough that their Brownian movement is of little importance.

Further requirements are imposed on ER fluids when they are incorporated into devices for practical application. One such requirement concerns response times, *i.e.,* the time that it

takes for the gelation transition to occur when the field is applied, and the time lapse as the system reverts to the liquid state when the field is removed. In most ER fluids, the response is sufficiently rapid to meet practical needs. In the case of AC fields, however, response times may limit the frequencies which may be used.

A severe requirement on ER fluids for practical use concerns stability, not only against settling but also against degradation of either the fluid or the device in which it is used. In order to retain its properties over long times and repetitive duty cycles, the dispersion must resist electrolysis, hydrolysis, coalescence, and mechanical degradation. It must degrade neither the device nor the electrodes, whether by chemical attack or mechanical abrasion. Practical devices make severe rheological demands on ER fluids. For most applications, the zero-field viscosity of the fluid should be low, to minimize energy dissipation. When the field is applied, the ER fluid must be transformed into a viscoplastic material, whose yield stress limits the force which may be resisted or transmitted. As yet, yield stresses of ER fluids are too low to transmit the high torques required by automobile transmissions.

(It should be noted at this point that there are a number of undocumented reports of fluids producing ER effects much stronger than those reported in the open literature. Several researchers, including two of the panelists, have made reproducible measurements on such fluids. What has prevented these observations from appearing in the patent and publication literature is the fact that the researchers were not able to reproduce the fluids. However, if these experiences are valid, they indicate that there is a major breakthrough to be made in increasing the magnitude of the ER effect.)

Thermal requirements can also be severe. An ER fluid may be called upon to serve over wide ranges of temperature without drastically altering its yield stress or zero-field viscosity. Aside from variations in ambient temperature, which for automotive applications may range from -30 to 50C, appreciable temperature rise can be produced through dissipation of mechanical energy, as in shock absorbers or anti-vibration mountings. It is not unusual for a device designer to specify an operational temperature range of -50 to +150C.

Environmental considerations impose further demands on ER fluids. They must be capable of being handled safely in the workplace where devices are assembled or repaired. Accidental spillage must not create hazards to health or ecology. Safe means must be available for ultimate disposal of wornout or outmoded devices. Unfortunately, some of the dielectric media which best meet other criteria fail on the grounds of hazard and toxicity. From the viewpoints of stability, density and cost, halogenated hydrocarbons have superior properties for use as ER media. However, they are toxic and difficult to dispose of when their service life is finished. Other promising media are too volatile and/or flammable. Silicone fluids, currently favored by several potential suppliers of ER fluids, may encounter objections from automotive repair shops, where even slight traces of silicone contaminants can ruin the appearance of repainted surfaces. And while they are not toxic, silicone fluids are not biodegradable.

Finally, there are cost considerations. Both the ER fluid and the device in which it is used must meet cost limitations which are particular to the application. Here again, automotive devices provide excellent examples. An ER shock absorber must compete with mechanical,

hydraulic and electromechanical devices which serve the same function. If the cost of the ER device is too high, some other way will be found, even if it is less effective.

3.3 Theories of the ER Effect

3.3.1 Qualitative Theory

ER fluids consist of polarizable particles dispersed in a nonconducting medium of low dielectric constant. Application of an electric field induces dipole moments in the particles which, aligning head to tail, form into particle chains. The chains in turn form filaments one or more particles wide, which span the gap between electrodes. The tensile strength of these filaments, with their favorable alignment perpendicular to the electrodes, greatly reinforces the ability of the ER fluid to support stresses. When the field is de-energized, the induced dipole moments vanish, and with them the tensile strength of the filaments. Thus the ER effect is rapidly reversible, turning on and off almost instantaneously with the field. Theories of the ER effect involve three aspects: (1) the mechanism of polarization; (2) the kinetics and morphology of filamentation; and (3) prediction of the resulting ER response of the fluid.

The computer simulations described in Section 5.4 show convincingly that all that is really required for an ER effect is a mismatch of dielectric constants ϵ_p and ϵ_s between particles and medium, respectively. It is advantageous to have $\epsilon_p > \epsilon_s$ (a) because the ER effect is larger and (b) because media of high dielectric constant tend (sometimes through contamination) to be more electrically conductive. With sufficiently high particle concentrations and electric fields, these simple dispersions undergo filamentation and exhibit field-dependent yield stresses. In these simple dispersions, the induced dipole moments arise solely due to the bulk polarizabilities α_p and α_s of particles and medium, respectively. The magnitude of the ER effect depends strongly on the ratio $\epsilon_r = \epsilon_p/\epsilon_s$. This ratio can be greatly increased by invoking special techniques to increase the polarizabilities α_p of the particles.

The polarization theory is valid at all frequencies (including d.c.) for dispersions of nonconducting particles in a nonconducting medium. For particles and/or media displaying appreciable conductivity, however, the simple polarization theory is accurate only at high frequencies. At lower frequencies and for d.c. fields, optimal ER effects are achieved by maximizing the mismatch of complex permittivities of particle and medium.

Once the particles are polarized, electrostatic forces cause them to attract one another and to form chain-like aggregates; if the particle concentration is high enough, the chains will form into filaments which span the gap between the electrodes. Theoretical approaches to this cooperative phenomenon are discussed in Section 5.4. by Philip Taylor. Response time for onset of the ER effect is determined mainly by the time needed for the particles to migrate from a random configuration and to aggregate into chains and filaments. If the particles are anisotropic in either shape or dielectric properties, the time required for the particles to rotate into alignment with the field lengthens the response time appreciably. Once the field is removed, however, depolarization is almost instantaneous, and the yield stress vanishes.

3.3.2 Mechanisms of Polarization

The ER fluids which were first described in the literature and in patents contain appreciable amounts of water as an essential component, *i.e.*, the ER properties of these fluids are greatly diminished if the water is removed. Whether the water surrounds the particles or permeates them, some ionization occurs, and it is the presence of mobile ions that makes the particles highly polarizable. In most cases, the water is adsorbed on the surface of the particle, forming an envelope of high dielectric constant and conductivity. Mention is made in many papers of an electrical double layer, where a compact inner layer is formed by fixed charges adsorbed or bound to the particle surface and a more or less diffuse outer layer is formed by mobile ions in the aqueous envelope.

3.4 ER Materials

While water-containing fluids show strong ER effects, they tend to be unstable over long times or wide temperature ranges. Their electrical conductivities tend to be high, resulting in undesirable levels of power consumption and Joule (I^2R) heating. The recent renewal of interest in ER technology is sparked in large part by the development of water-free ER fluids of various types. Each type invokes a special mechanism for augmenting the polarizability of the particles. In **aluminosilicate or zeolite systems**, the particles are ionic conductors; ions within the particles are free to move in response to the electric field. The same mechanism accounts for the high polarizability of **polyelectrolyte particles**. Each of these ionic conductors can benefit from the presence of small amounts of essentially bound water (*i.e.*, water which is not readily removable by thermal treatment). The charge carriers in **semiconducting particles** are electrons. **Liquid-crystalline polymer molecules**, besides being highly polarizable, usually have permanent dipole moments which help the molecules to align with the electric field. ER fluids have been made in which the liquid-crystalline polymer is molecularly dissolved in a suitable solvent, rather than being dispersed in particulate form, thus completely eliminating the settling problem. Recent papers and patents describe **composite particles**, consisting of nonconducting particles coated with a conducting metallic layer. A thin nonconducting outer layer is added as insulation to eliminate electron transfer between particles when filamentation occurs.

3.5 Rheometry of ER Fluids

The rheological behavior of the ER fluid must be measured as a function of the shear stress σ and the electric field E. In the absence of an electric field (E = 0), the fluid behaves as an ordinary dispersion. Its viscosity η_0 can be determined in a number of viscometric geometries, of the extrusion type (capillary, slit, annulus) or of the rotational type (concentric cylinder, cone-plate, parallel disk). If the data are properly acquired and analyzed, the relationship found between η_0 and σ will be independent of the viscometric geometry used. When a field E is applied, the rheological behavior of the ER fluid will vary with E as well as with σ. Because the particles of the fluid align with the field, the fluid becomes anisotropic and viscoplastic (*i.e.*, exhibits a yield stress). To describe fully the rheology of the electrostatically aligned ER fluid, a single viscosity coefficient $\eta(\sigma,E)$ is not sufficient; a number of viscosity coefficients and elastic moduli are required.

To design ER devices, knowledge of $\eta(\sigma,E)$ is often considered to be sufficient. To a good approximation, the shear rate $\dot{\gamma}$ can be expressed by the Herschel-Bulkley equation:

$$\sigma = \sigma_y + K\dot{\gamma}^n \tag{1}$$

Here σ_y is the yield stress, and K and n are material parameters. When n = 1, the Herschel-Bulkley equation reduces to the Bingham plastic model. Because of the anisotropic nature of the aligned ER fluid, viscosities measured in different viscometric flows will not necessarily agree. Indeed, it has not been established that viscosities measured at different gap widths in the same flow geometry, *e.g.*, flow through a rectangular duct, will agree. Fortunately, the two most important parameters, namely σ_y and η_0, will usually agree within acceptable limits.

For rheometry of ER fluids, it is necessary to impose a well defined electrostatic field. This eliminates capillary and cone-plate rheometers, leaving only duct and annular geometries in efflux and concentric-cylinder and parallel-disk geometries in rotation. Most commonly employed are duct flow and concentric cylinder rotational instruments. (The duct-flow rheometer for ER fluids is referred to in the Russian literature as a "channel condenser".)

Flows encountered in ER devices such as valves or shock absorbers rarely correspond to the simple shear flows attained in laboratory rheometers. Flows are more complex, often including extensional components. Extensional properties of ER fluids can be measured by the force needed to change the spacing between parallel electrodes. In the cases of rapid oscillatory or unsteady flows, the fluid's behavior will also depend on its ER response time.

At stresses below σ_y, the ER fluid behaves as a viscoelastic solid; indeed, its response can be considered to be that of an ER solid. Its rheological behavior can be characterized by small-deformation oscillatory measurements as a function of frequency. Its behavior at larger deformations, *i.e.*, at stresses closer to σ_y, is also of some importance. Response time can be measured by high-frequency oscillatory shear, by using high-frequency AC fields, or by response to rapid transient changes in shear or field. Because response times are of the order of a millisecond, instrument and fluid inertia limit the applicability of shear variations, especially those of a transient nature.

We see then that rheological characterization of ER fluids is at a rather primitive stage. Full characterization goes far beyond determining a single viscosity coefficient as a function of σ and E. In steady flows, we do not even know how to inter-relate observations made in different viscometers. We do not have adequate ways to measure extensional or transient rheological properties. We rarely measure viscoelastic properties of ER fluids in their plastic regime.

3.6 Stability of ER Fluids

3.6.1 Colloidal Stability refers to the resistance of the particles to the formation of aggregates. When brought into contact or very close proximity, particles tend to adhere to each other due to van der Waals forces of attraction. To retain their individuality, particles must be stabilized through forces of repulsion, either electrostatic or steric. Electrostatic

forces are important chiefly in polar media, which favor electrolytic dissociation. Steric stabilization is possible in both polar and nonpolar media, through adsorption or bonding of molecules which contain polymer fragments that are soluble in the medium. When the stabilizing fragments are short, weak aggregates or coascervates can still be formed, but these are readily redispersed with stirring. Certain ER applications can tolerate the formation of reversible aggregates, while others can not.

3.6.2 Settling Stability of ER dispersions is usually measured in the most elementary way: by allowing the fluid to sediment under gravity and following the height of the clear fluid as it develops over time. There is no indication that accelerated settling (centrifugation) has been adopted to measure settling stability of ER fluids.

3.6.3 Thermal Stability has two aspects: (1) the ability of the fluid to function at reduced and elevated temperatures and (2) its resistance to degradation when held at elevated temperatures over long periods of time.

3.6.4 Mechanical Stability refers to the resistance of the ER fluid to mechanical degradation, *i.e.*, to prolonged shear at shear rates comparable to those expected within ER devices. Such shear is known to produce attrition or coagulation of the particles in certain dispersions.

3.6.5 Electrical Stability has two aspects: (1) dielectric breakdown strength and (2) changes in the fluid or electrodes resulting from prolonged current flow. The yield stress, which determines the resistive force of the ER fluid, goes up as E^2, but E is limited by the dielectric breakdown strength of the dispersion, which will generally be less than that of the pure dielectric medium. Use of low-frequency AC fields is considered to be desirable because it periodically reverses chemical changes produced in the fluid or the electrodes by the passage of electric current, although some electrochemical changes occur on a time scale that renders them irreversible under low-frequency a.c. currents.

3.6.6 Morphology

Since the particles are usually large enough to be visible under a high-power optical microscope, particle sizes and shapes are readily seen in dilute dispersions. ER fluids, however, are sufficiently concentrated to be opaque; the state of particle aggregation in the absence of an applied field is usually inferred from rheological measurements. Nevertheless, it is still possible to observe microscopically the filamentation which occurs through formation of particle chains when a field is applied. For systems which are transparent to various wavelengths of electromagnetic radiation, electro-optical effects can be utilized to study field-induced morphological changes.

3.7 ER Research and Development Worldwide

Since Winslow's 1947 patents, ER research and development have undergone several waves of intensity and decline. This cycling is clearly discernable in the Extended Bibliography (Part VII), especially in the number of patent applications per year. The current level of activity is a combination of a residue remaining from prior waves and the beginning of a

renaissance due mainly to the emergence of new anhydrous ER fluids. Another contributor to the renaissance is today's highly developed solid-state electronics and computerized controls, which promise to meet all the needs for ER power and control circuitry effectively and at low cost.

It is difficult to assess the progress of industrial R&D in the U.S. and elsewhere, because most of the work is considered to be highly proprietary. The best indications are the patent literature and the proceedings of the relatively few conferences which have been published. Academic research, on the other hand, is mostly open, both in the published literature and to informal inquiry.

Taking the patents issued as the criterion of industrial activity, the data are very illuminating. Table 3.7.1 shows ER fluid patents issued each year since 1986, while Table 3.7.2 shows patents on ER devices. Prior to the disruptions of 1991, the USSR was a leader in device patents but did little in the development of fluids. Despite an earlier strong interest in ER technology, industrial activity in the U.K. has been relatively dormant. And despite the fact that the first patents came from the U.S., industrial activity in this country is only recently showing signs of renewal. On the basis of research papers published (Table 3.7.3), however, academic activity in the U.S. is roughly equivalent to the combined activity of the other four nations. German industrial activity has been at a consistent but modest level in devices, with little activity in fluids. The real "comer" is Japan, with substantial activity in devices, but with clearly emerging leadership in the development of new ER fluids.

Dr. Korobko's report on ER activity in the former USSR supports the conclusions drawn from the patent literature. What the patent literature does not show is reduction to industrial practice, which is much more widespread in the USSR than elsewhere. Dr. Goodwin's report on visits and contacts in the U.K. shows that the level of activity there is still significant, and that the government is supporting a new R&D initiative in ER technology. Dr. Filisko's report on his visit to four major Japanese corporations, together with the translation of a 1990 Japanese report on "Developments in ER Fluids", bear out the conclusions drawn from Tables 3.7.1 and 3.7.2.

The panel's visits and contacts in other countries show more interest than activity. In Germany, industrial activity exceeds that in the universities, while in France the situation is reversed. Dr. Xu's report shows that ER research is under way in mainland China, but that the level of growth hinges on future funding. Our conversation with Dr. Hans Conrad shows that several of his former students have started ER research activities in Korea.

When we compare U.S. research and development with that overseas, we find a divided picture. In academic research, the U.S. is among the leaders, in spite of limited funding. U.S. companies, however, seem to be waiting for other nations to show them the way. This is understandable in view of their generally low investment in long-range R&D, and in view of the market and liability risks of coming out with a completely new technology. Whatever the reasons, it appears that the U.S. has relinquished the position of leadership in a technology which was invented here.

Our conclusion is that ER technology is once again on the springboard. The questions are who will find the courage to take the plunge into industrial production, what will be the first products, and when will this occur. Judging from their current level of activity, the Japanese are the most promising candidates, and their first area of large-scale application is likely to be in the automotive industry.

Table 3.7.1 Number of Patents per Year on ER Fluids

Year	USA	UK	Japan	Germany	USSR
1986	0	1	0	2	0
1987	0	1	0	1	0
1988	3	1	8	0	1
1989	2	1	33	0	0
1990	4	4	22	0	0
1991	7	0	32	2	0
Total 1986-91	16	8	95	5	1

Table 3.7.2. Number of Patents per Year on ER Devices

Year	USA	UK	Japan	Germany	USSR
1986	0	2	0	3	2
1987	4	2	0	10	12
1988	5	0	4	3	7
1989	5	2	5	4	16
1990	6	0	5	2	13
1991	6	1	7	10	1
Total 1986-91	26	7	21	32	51

Table 3.7.3 Number of Research Papers per Year on ER Fluids *

Year	USA	UK	Japan	Germany	USSR
1986	0	1	0	0	1
1987	2	2	0	0	3
1988	1	1	0	0	0
1989	6	0	0	0	3
1990	8	4	4	0	4
1991	13	5	7	1	2
Total 1986-91	30	13	11	1	13

* *Papers covered in the surveys and conference proceedings listed on pages 2-3 and 2-4 are not included here.*

3.8 Energy Considerations

An important charge to the panel was to identify applications of ER technology that could significantly reduce the nation's consumption of fuel and energy. ER devices themselves are electrically powered and controlled, but the energy needed to actuate and control an ER device is usually negligible compared to the energy controlled by the device. In comparison to hydraulic or electromechanical systems designed to perform the same function, an ER device consumes less energy and has the potential to perform the function more effectively and more rapidly. These are the reasons behind DOE sponsorship of this study.

A major part of our energy is consumed in transportation - automotive, air and marine. One of the most promising applications of ER technology is in automotive shock absorbers and motor mounts. The panel was unable to find any published estimates of the amount of energy lost due to inadequately controlled vibrations in automobiles and trucks. Unpublished sources estimate power consumption of a typical passenger automobile on a smooth road could be reduced by ¼ to ½ HP (0.2 to 0.4 kilowatts) through optimal control of the vertical motion of the vehicle. Since the total propulsive power is from 10 to 15 HP, fuel consumption could be reduced by 2 to 4%. This estimate is probably high, since control of vertical motion will have to consider passenger comfort as well as energy reduction. On rough roads, however, the saving will be higher than on smooth roads. For heavy trucks, separate control of cab and trailer motions is probably the way to go.

Other automotive uses that may come in the near future include vibration dampers for engine mounts. Fluid couplings for automotive accessories, such as air conditioners and alternators, would permit full decoupling when the accessory is not in use. Replacement of the conventional automatic transmission by a variable-torque ER transmission could produce

major energy savings, but high-torque ER transmissions are not practical as yet. Yield stresses are too low to transmit the required torques, unless the transmissions themselves are made very large in order to increase the coupling area.

The panel has encountered indications that ER technology can be used to modulate the stiffness of airfoils, hydrofoils and structural members. Since the optimal stiffness of an airfoil varies with speed, ER modulation of the stiffness could produce appreciable savings in propulsive energy. The same principle could apply to marine hydrofoils and to helicopter blades, again with consequent savings in energy. There have been a number of proposals to utilize ER materials as active structural members of buildings and bridges for control of their dynamic response to earthquakes and windstorms. The potential exists here to render nuclear power plants more resistant to earthquakes, and hence safer and more acceptable to the general populace.

Russian workers have proposed a number of innovative applications of ER technology. Some of these, such as dielectric motors and ER fluid heat transfer devices, could have important energy consequences.

Since ER devices are usually lighter and simpler to manufacture than the hydraulic or electromechanical devices they would replace, there are potential energy savings in materials use and in processing. These savings will not be very significant, however, until ER technology achieves widespread adoption.

PART FOUR: RECOMMENDATIONS

It is the widely held opinion of the panelists, and of the experts whom we interviewed, that the bottleneck in the advancement of ER technology is the unavailability of ER fluids possessing the necessary properties and stability. Once the right fluids become available, the market potential of ER devices and the many designs already at hand indicate that commercially practical devices should soon follow. When that time comes, the present sophisticated levels of solid-state electronics and of control theory assure us that effective, reliable and inexpensive power supply and control circuitry will be developed (in spite of the formidable problems of rapid switching at high voltages). For these reasons, the panel's recommendations of highest priority are concentrated on the kind of research needed to foster the development of new and improved ER fluids.

The panel's research priorities fall into four thrust areas:

(1) Mechanisms of ER phenomena
(2) Improvement of ER fluids
(3) Understanding of rheological and electrical properties
(4) Development of design methodology.

The sections which follow elaborate on these thrust areas and justify the high priorities given them.

4.1 Mechanisms of ER Phenomena

Some 50 years after the disclosure of the first ER fluids, the best fluids which have been developed to date still do not fully meet the demands of the marketplace. As the necessary first step to improving ER fluids, the panel calls for research which will yield a thorough understanding of the underlying mechanism of the ER effect. If we understand the mechanisms of particle interaction, of filamentation, of the field-induced transformation which underlies the ER effect, we can design, synthesize and formulate fluids which will have the desired properties. Only in this way can we break out of the Edisonian, trial-and-error approach to ER fluid development which has thus far yielded inadequate results.

4.1.1 Interaction Mechanisms

The best ER fluids produced thus far are dispersions of highly polarizable particles in dielectric media. Simulation studies demonstrate convincingly that filamentation and viscosity enhancement will occur in an electric field, so long as dielectric constants of particle and medium are different. This means that simple bulk polarizability of the particle is adequate to produce an ER effect. When we consider those dispersions which produce ER effects strong enough to be of practical importance, however, we find that each of them utilizes some mechanism for increasing particle polarizability beyond that expected from the dielectric constant of the material which constitutes the bulk of the particle.

When an electric field is applied to an ER fluid, the particles become polarized, *i.e.*, they acquire a field-induced dipole moment. In the simplest case, this dipole moment results from polarization of the molecules of which the particles are constituted. However, the particles in those dispersions which are known to produce strong ER effects contain mobile charges, whether ions or electrons, either internally or on their surfaces. It is the migration of these mobile charges under the influence of the electric field which enhances the polarizability of the particles and produces a stronger dipole moment. These field-induced dipoles attract one another and cause the particles to form chains which, if the particle concentration is high enough, will span the gap between electrodes and produce a yield stress.

The times required to induce polarization of the molecules are in the femtosecond range; those required to complete the migration of the charge carriers are in the submicrosecond range. Since the response times of ER dispersions fall in the range of a few milliseconds, it is clear that the rate-determining step in ER response is the much slower process of chain formation and filamentation.

It is noteworthy that the particles in ER fluids cited in the literature are almost always spherical (or nearly so). Consider two particles of the same volume and bulk polarizability, one spherical and the other in the form of a prolate ellipsoid. In an electric field, the ellipsoidal particle tends to align with its major axis along the field; once aligned, the particle will have an induced dipole moment higher than that of the sphere. A second advantage of elongated particles is that fewer particles are needed to form a gap-spanning chain or filament. With these advantages, why is it that elongated particles are not preferred in ER dispersions? Is the time needed for the particle to rotate into alignment too long? Are nonspherical particles so much more susceptible to breakage under high-shear conditions? Have these supposed disadvantages been investigated to an extent adequate to rule out nonspherical particles? Surely, there are applications, such as automotive clutches, where a slower response of nonspherical particles would not only be acceptable; it would be desirable in order to reduce mechanical shock.

We know of materials which possess strong intrinsic dipole moments. In *ferroelectric materials*, dipolar domains within the particle can be rotated into alignment by an electric field. This is a very rapid process. *Electrets* are macroscopic bodies which have permanent dipole moments. Electret particles may tend to aggregate even in the absence of a field; and their response to an electric field will be slower, since rotation of the entire particle is involved. There is some indication in the literature of attempts to use dispersions of barium titanate ($BaTiO_3$), a ferroelectric material, but none of attempts to use electret particles.

4.1.2 Filamentation

Once the particles are polarized, they are attracted together by dipolar electrostatic forces to form chain-like aggregates, whose axes are aligned with the electric field. If the concentration of particles is high enough, the chains will eventually reach from one electrode to the other. Chains may form into bundles or filaments, whose Young's modulus and tensile strength determine the yield stress of the ER fluid. Once the yield stress is exceeded, the filaments break. At low shear rates, filaments may continually break and reform, but

at high shear rates the filamentary structure is destroyed. There is some indication that irregularities in the electrode surfaces can strongly influence the number, diameters and strengths of the filaments which are formed. This potentially important observation is consistent with the role of surface irregularities in concentrating the electric field.

In the absence of the field, the dispersion behaves as an isotropic liquid, in the presence of the field like an anisotropic elastic solid. Under static conditions, the electric field induces in the dispersion what may be regarded as a phase transition. It will be useful to develop further the thermodynamics and the kinetics of this transition, including the effects of mechanical stress and of temperature. In this way, we should be able to predict yield stresses and response times, and to estimate upper bounds of ER fluid performance.

4.2 Improvement of ER Fluids

4.2.1 Size, Shape and Size Distribution

While most ER fluids employ spherical particles, it is not at all certain that the sphere represents the optimal shape for all ER fluid applications. Even for spherical particles, we need to investigate the roles of particle size and size distribution. For nonspherical particles (ellipsoids, rods, fibers), we need to study the effects of aspect ratio on polarization, filamentation, response time, and durability.

4.2.2 Structured Particles

One of the ways to enhance polarizability of the particles is through carefully designed structured particles. Several of these have appeared in the patent literature. Incorporation of a finely dispersed conductor within the particle greatly enhances its polarization, as does adsorption or deposition of a conducting coating. In the latter case, a nonconducting outer layer is needed in order to reduce electrical conduction through particle chains and filaments. One structure suggested during the panel's discussions consists of flexible polymer fragments of high permanent dipole moment "tethered" by chemical bonds to the particle's surface. The science of emulsion polymerization has progressed to the point where latexes of structured particles can be prepared over a wide size range.

4.2.3 Single-Phase Systems

In contrast to dispersions, single-phase systems present no sedimentation problem. Section 5.9 is devoted to the applicability of liquid-crystalline systems as ER fluids. Recent data cited in this section show that solutions of polymeric liquid crystals are capable of showing strong ER effects. These systems merit further research and development.

4.2.4 Control of Sedimentation

The tendency of particulate dispersions to settle under gravity causes severe problems. There are well known methods to reduce or eliminate sedimentation, some of which have been applied to ER fluids. Most obvious is matching of densities of particle and dielectric medium. This becomes very difficult for particles of high density (SiO_2, $BaTiO_3$, etc.); even

when it is possible, the dense liquids which must be used are toxic (*e.g.*, halogenated hydrocarbons). For polymeric particles, density matching is easily achieved at any one temperature, but differences in thermal expansion coefficients produce density mismatches at temperatures higher or lower. However, it is possible in principle to match both density and thermal expansion through the use of ternary liquid mixtures.

In some applications of ER fluids, sedimentation may be tolerated so long as the sediments are easily redispersed. Irreversible coagulation of particles can be avoided through electrostatic or steric stabilization. Unfortunately, electrostatically stabilized systems are too highly conducting to serve as practical ER fluids. Steric stabilizers are molecular fragments which are soluble in the medium, but are chemically bound or strongly adsorbed to the particle surface. While ordinary nonionic surfactants can function as steric stabilizers, the most versatile steric stabilizers are block or graft copolymers, since their components, morphology and chain lengths can be tailored to the particular stabilizing task. There is no indication in the literature that block copolymer stabilizers for ER dispersions have received more than a preliminary investigation.

In colloidal dispersions, the tendency to sediment is opposed by Brownian movement of the particles. When the particles are of colloidal size, their Brownian motion also combats the tendency to form chain-like aggregates when the electric field is applied. Also, the dipole moment μ is the product of the charge q and the separation distance d ($\mu = q \times d$), and d is limited by the size of the particle. For these reasons, practical ER dispersions have thus far utilized particle sizes above the colloidal range (*i.e.*, > 1 μm). Nevertheless, because of their stability and resistance to mechanical degradation, it would be useful to investigate thoroughly whether colloidal dispersions of polarizable particles can be effective as ER fluids.

One of the methods to reduce sedimentation is to add to the medium a soluble thickener which imparts a weak yield stress. While the arsenal of thickeners for aqueous systems is far larger than for dielectric media, it should be possible to find suitable thickeners for ER fluids which will impede gravitational sedimentation. Such thickeners would, of course, increase the zero-field viscosity of the fluid and, more seriously, would increase its ER response times. A thickener which confers on the dispersion a weak yield stress - large enough to prevent sedimentation but so small that it would not greatly increase the zero-field viscosity - might prove optimal.

4.2.5 Activators

Components are frequently added to ER fluids to increase the ER effect. These "activators" serve, through various mechanisms, to augment the polarizabilities of the particles. Already mentioned is the role of water, which can permeate a particle which is porous or water-swellable, or can adsorb to form a thin aqueous envelope around the particle. In either case, the ionic charge carriers made possible by the presence of water will migrate with the electric field. When the particles form into filaments, ions may well transfer between particles, leading to an undesirably high conductivity for the ER fluid as a whole. This interparticle charge transfer can, in principle, be prevented by providing the particle with a thin nonconducting ion-impermeable coating. Because of its volatility and reactivity, water

is not a desirable component of an ER fluid, however. Other additives, less volatile than water but also possessing high dielectric constants, might activate ER fluids by the same mechanism. Examples might include dimethyl sulfoxide and ethylene and propylene glycols and carbonates.

Irradiation can activate ER particles by forming electron-hole pairs, which can be even more effective than ions as charge carriers within the particles or along their surfaces. Here again, an insulating coating may be needed to prevent interparticle charge transfer when filamentation takes place.

Surfactants play many roles in ER fluids. While they are beneficial as stabilizers in the absence of electric fields, when the field is applied they can produce deleterious effects, promoting interparticle charge transfer or irreversible coagulation. There is some indication that they can also function as activators, perhaps by ionic conduction within the surfactant layer, or perhaps through their own permanent dipole moments.

4.3 Understanding of Rheological and Electrical Properties

In order to develop better ER fluids, we need to understand their rheological and electrical characteristics. Some of this understanding will come from a more thorough knowledge of the mechanisms of the ER effect. In particular, we will know how these properties depend upon fluid composition. Nevertheless, there are important questions about rheological and electrical properties which require investigation on a different level.

4.3.1 Rheological Properties

In the presence of an electrical field, ER dispersions become in effect composite solids, whose mechanical and electrical properties depend on the field strength. Once a shear stress is applied, the structure becomes distorted and ultimately breaks; at intermediate stresses it breaks and reforms continually. There is a real question as to when the ER fluid can be properly considered to be a homogeneous material, and when it is necessary to take into account its two-phase nature. Even considering the ER fluid as a homogeneous material, its anisotropicity requires more than a single shear stress function to describe its response to stresses imposed in different directions. There are works published on the rheology of anisotropic materials, but the situation in ER fluids is rendered more complex by the strong electrical field. Treatments which ignore anisotropic effects introduce approximations whose errors are difficult to estimate.

One of the main objectives of laboratory measurements is to provide information which will aid in predicting the behavior of the ER fluid in a practical device. Yet measurements of the simplest rheological property of ER fluids - the dependency of viscosity on shear stress - give results which depend on the type of instrument used. Even with a single instrument type - for example the rectangular duct efflux rheometer - results depend on the instrument's dimensions. Clearly, we need a better mathematical and mechanical framework for expressing and interpreting the rheology of ER fluids.

4.3.2 Electrical Properties

The electrical properties of most importance are conductivity and dielectric breakdown strength. Conductivity determines power requirement and Joule heating, while dielectric breakdown limits the magnitude of the ER effect by restricting allowable electric field strengths. Those fluids which exhibit the strongest ER effects also show significant electrical conductivity, although we know of no reason why this should be so. Both electrical conductivity and dielectric breakdown strength can be strongly affected by small changes in composition, as by ionic dissociation or the concentrations of contaminants. We need to understand the role of these "minor" components and how to control their effects on electrical properties.

4.4 Development of Design Methodology

4.4.1 Specifications and Testing

To bring ER technology to commercial realization, we must have ER fluids whose properties meet certain specifications. We can identify most of the properties which affect performance of ER devices. We need to know certain **electrical properties**, principally electrical conductivity and dielectric strength. The **rheological properties** needed include at least the zero-field viscosity and the yield stress as a function of electric field. **Chemical characteristics** of importance include compatibility with device components and resistance to electrolysis and oxidative degradation. Important **thermal characteristics** are thermal conductivity and the variation with temperature of *all* relevant properties. **Temporal characteristics** include response times and usable frequency range (band width). **Handling characteristics** during pumping and storage must be known. Last but not least are **environmental considerations**: volatility, toxicity, degradability, and a host of other ESH (Environmental Safety and Health) characteristics.

To arrive at specifications for ER fluids, we must first determine desired and allowable ranges for each property, and then devise ways to measure these properties on a routine basis. These tasks are far from trivial and will require considerable research and development effort. Specifications will provide useful "targets" to guide ER fluid producers in developing commercial ER fluids. They will also give device manufacturers the information on which to base their designs. Under the present climate of aversion to risk and legal responsibility, neither producers of ER fluids nor manufacturers of ER devices will dare to market their products without a set of carefully developed specifications.

4.4.2 Systems Approach to Design

With the present highly developed state of solid-state electronics and electronic control circuitry, we can have every expectation that power and control mechanisms for ER fluids will become available soon after the need becomes evident. There is one aspect of ER control circuitry that may require some serious research and development effort, however. This is the area of high-voltage switching at submillisecond time scales.

Ultimately, systematic methods and procedures must be developed for the design of ER devices, based on (1) the function and purpose of the device, (2) the known and specified properties of the available ER fluids, and (3) the power and control requirements of the particular device. The development of such methods and procedures is itself a research priority; its accomplishment will greatly accelerate the pace of application of ER technology.

4.4.3 Catch 22

The panel would like to make one recommendation which goes beyond its initial charge of identifying research priorities and addresses the problem of promoting the practical application of ER technology. What we see before us is a frustrating scenario, in which it seems that (1) no device will be marketed until a commercial ER fluid is available, while no commercial fluid will be developed until a large-volume market is assured. **Some way must be found to overcome this "Catch 22" situation.** One or more ER fluids which are both achievable with present knowledge and usable in a range of proposed applications need to be prepared in sufficiently large batches to allow samples to be distributed to device developers. The ready availability of good ER fluids for development purposes could really stimulate the rapid commercialization of ER technology.

PART FIVE: PANELIST REPORTS

5.1 ER Fluid Devices and Energy Savings

John R. Wilson

I. Overview

Electrorheological fluids have now been known, but very little understood, for almost 100 years (the first observations were reported by Konig in 1885 and Duff in 1896). For many years, and especially since World War II, there have been numerous, sometimes strenuous attempts to develop successful applications for these fluids whose apparent viscosity (actually, shear strength) varies according to the electric field (typically in the 1-5 kV/mm range) to which the fluid is exposed. None have been successful in producing a commercial device, primarily because of severe limitations in the performance of the fluids used.

Almost all of the work on ER fluids until very recently has been of an Edisonian nature; very little effort has been made to develop an understanding of the physics and particle dynamics of these materials. As a result, applications developers have generally used fluids that were poorly understood and inadequately characterized; their engineering limitations in long-term use were seldom documented by fluid investigators, who rarely worked with applications engineers and who typically seemed to view the fluids as a scientific curiosity. It is not surprising that all attempted applications have failed commercially (in most cases, never progressing beyond prototype form), despite the establishment (and subsequent disappearance) of several quite large, well-funded applications development programs.

As is reported in the conclusions to this section, this situation still prevails. ER fluids are little understood, and most data that have been collected relate only to short-term use. Issues such as compatibility with containment materials, long-term stability and the like have generally been ignored. What seems to be required is a major effort to develop an in-depth understanding of the physics and "mechanics" of the several classes of ER fluids that have evolved, before any significant further effort is spent on device development.

In what follows, we briefly review the current (and somewhat sorry) state of ER fluid device development (Section 2), discuss in some detail the considerable number of remaining technical barriers that must be overcome before commercialization, at least in demanding applications (Section 3), briefly discuss the engineering requirements for future fluids (Section 4) and detail the significant applications that have been attempted, with reasons for their failure (Section 5). Potential energy savings resulting from the use of ER fluids are discussed in Section 6. Finally, we suggest some conclusions and directions for future development work (Section 7).

II. Current Status of Electrorheological Device Development

2.1 Introduction

The history of ER fluid technology development, while showing steady, if slow, progress in the evolution of successful fluids, has been more disappointing in the development of commercially viable devices. Only now are the first ER devices (automotive engine mounts) approaching commercial introduction - now possible in 1994. Many prototype devices have been developed, but success has always been frustrated by lack of fluid mechanical performance (*i.e.*, field-induced shear strength under dynamic conditions) or poor stability, excessively high conductivity (particularly at higher operating temperatures), or (less often) poor device design. Only recently have any rational design principles been suggested (Duclos (1987/1988), and much of the available design "folklore" is, properly, still viewed as proprietary.

2.2 Chronology

Electrorheological fluids have been known for many years; the first applications appear to have been reported in detail by Willis Winslow in 1949, although the earliest reported observations of electrorheological phenomena were made in the late 19th century (Konig 1885; Duff 1896; Quinke 1887). Russian workers commonly refer to the ER effect as the "Quinke Effect"; in the west, it is often called the "Winslow Effect".

Winslow believed that the field increased the viscosity of the slurries (rather than their "yield strength") and so named them "electroviscous fluids", a nomenclature that is technically incorrect. It also invites confusion with the so-called first, second and third electroviscous effects that are well known phenomena in aqueous electrolyte systems (there is a mechanistic similarity to the phenomenon in ER fluids).

The early fluids were generally dispersions of readily available solids such as starch or dried silica gel in such liquids as mineral oil or lubricating oils. The potential benefits of a fluid whose flow characteristics were field-dependent were quickly recognized, but efforts to develop and commercialize successful devices were often frustrated by a lack of reproducibility in the early fluids. Indeed, it was quite common to receive a batch of fluid that exhibited no ER effect at all!

Much of the work in the 1940's was therefore somewhat prematurely focussed on the development of devices. None were commercially or even technically successful. Apart from some investigations reported by Andrade and Dodd in 1946 and 1950, little effort was made to understand the fluids until the work of Klass and Martinek in 1967, followed by Uejima (1972), Arguele, Martin and Pick (1974), Honda and Sasada (1976) and Arp, Foister and Mason (1980). Russian work, primarily device-oriented and most notably by Shulman

et al., also continued during this period - see, for example, Shulman (1981) and the summary of USSR work in Section 6.1 of this report - and resulted in the contribution of many useful concepts but, apparently, no commercial applications.

Western interest in device development flourished briefly in the 1960's in both the U.S. and the U.K. In the U.S., the activity occurred primarily at one of the major aircraft manufacturers, but these efforts were again sidetracked by the lack of a suitably stable, predictable fluid. None of this work appears to have been published.

In the U.K., an extensive program was established at the University of Sheffield by Bullough, Stangroom and others. These efforts focused on both fluid development and device development, and resulted in some very costly, complex fluids and very little in the way of useful device technology (although several patents were issued). Some of this work was summarized by Stangroom (1983), who in 1983 participated in forming ER Fluid Developments Ltd. This company is still in operation, funded primarily by research grants. Additional device-oriented work was also published by Sproston, Stanway and others at the University of Liverpool. Much of this work used very simple fluids offering less than optimum performance, but provided some useful guidelines to damper and clutch design using ER fluids.

Publicity given to the Sheffield work and a marketing effort by the British Technology Group (which owns some of the Sheffield technology) resulted in a sharp increase in activity in both fluid and device development in about 1984-5. A number of the industry and academic programs referred to elsewhere in this report were initiated at that time. Relatively little of this work has so far been published, although numerous patents have been applied for. In the mid-1980's, considerable strides were made toward the development of low-cost, stable, anhydrous fluids and of a limited number of devices capable of utilizing them effectively.

The most notable contributions were made at the University of Michigan (Filisko *et al.*), Cranfield Institute of Technology (Block *et al.*), Lord Corporation (who has also supported a number of the academic researchers), ICI Chemicals and Polymers, and Lubrizol. Lord Corporation was very active (and successful) in device development for vibration control and torque transmission. Bayer AG has developed a number of strongly performing fluids based on silicone oil, some containing unusually high particulate loadings; these have been applied in vibration damping devices by Metzeler AG (now a Pirelli subsidiary). Bayer holds several early patents on ER fluid formulations; others have been issued more recently to Filisko, Block, and Lord.

Apart from the work by Lord Corp., already referred to, relatively little leading-edge work is being done in the area of device development. Air-Log Ltd. (formerly Laser Engineering Development Ltd.) in the U.K., through its affiliation with the Electrorheology Research Syndicate, a consortium of British companies working on or interested in ER fluid technology, is reported to have developed a number of torque-transmission and vibration-isolation devices, but none seem to have been commercialized. The work of the Syndicate

has been very secretive and very little information is available on the activities of individual members (who include Castrol, British Aerospace, Dowty Rotol, GEC Marconi, and Automotive Products PLC). Most do not have active programs. The Syndicate, which is apparently no longer in operation, also funded some of the work of Block *et al.*

Much recent progress has been made in the development of simple "active" or on/off isolation devices, largely because of the successful development of simple ER fluid "valves". Progress has been made in design and development of small (*e.g.*, automotive accessory-drive) clutches and in the design of what may eventually become primary suspension dampers for automotive or truck application. Such devices have also been suggested as variable resistances for exercise equipment, such as rowing simulators.

Numerous other applications of ER fluids have been proposed and in some cases prototyped, especially by Russian workers who have done extensive work in this field (see, for example, Shulman *et al.* and also Section 6.1 of this report). Examples include various designs of valves, pumps (including peristaltic pumps), fluid distribution systems, "breakway" safety devices, fluid brakes, fluid couplings, traction control systems for road vehicles, various power devices to generate or dampen vibrations, packing devices (somewhat analogous to ferrofluid seals), a variety of measuring devices (such as a solid phase concentration meter) and, perhaps of greatest interest, heat exchange control systems.

In the latter case, the ER effect is used as a means of changing temperature fields and convective heat transfer characteristics in tubes and channels (Shulman 1978). The effective thermal conductivity of an ER fluid varies, as does the shear strength, as approximately the square of the applied field. While this could be used to control heat transfer, it is not clear how it could be used to enhance it, and hence to improve energy efficiency.

Other, perhaps less easily attainable, devices have been proposed that utilize the change in optical properties of an ER fluid when a field is applied (*e.g.*, movie projection systems). Other proposals include liquid electric generators, current transducers, scrubber systems, and flat-panel display TV sets.

2.3 Control Methods and Devices

An essential element of the whole system is the control of the ER fluids as they function in devices. Two important control parameters are reviewed below.

2.3.1 Switching High Voltages

In some respects, the development of appropriate technology to control ER fluid properties is more important than the fluids themselves. No low-cost commercial products exist that permit the switching of high voltages at elapsed times in the millisecond range or below. If the fast-reversing character of ER fluids is to be used effectively, such high-speed voltage switching systems must be developed.

There is a need for appropriate control policies (*i.e.*, control algorithms and related software, also designed for high-speed operation), at least for those cases where simple on/off control (such as might be needed for an auxiliary drive clutch) is not sufficient.

For active damping and active vibration control, effective control policies that require a fast-responding, continuously-variable, or on/off valve have been developed for non-ER hydraulic systems. (If the on/off valve action is fast enough, the operation of the controlled system can approach that of the ideal instantaneous-response, continuously variable system). These control policies are also applicable to ER-valved systems, provided the high-voltage control hardware and software, as well as the fluid, can react quickly enough. The needs, again, are for fluid development and the design of low-cost, fast-switching, high voltage control electronics.

Hardware requirements currently include the ability to switch up to 10 kV at switching speeds of less than 1 ms (less than 0.1 ms would be preferred), but it is likely that continued development of "fast", probably anhydrous, fluids, will reduce these requirements somewhat. A major requirement for high-volume applications (such as the automotive industry for vibration and motion control applications) is that the cost of such control packages be low ($10-20).

An important feature of any such device should be its ability to protect the user. The human body can tolerate high voltages, provided current flows are very low. If fluids can be developed that offer high shear strengths at very low currents, control devices can be used with current-limiting circuitry to protect against accidental shock. If, however, present-day fluids are used, currents will be too high for safety. The ideal fluid will require no more than an initial small (*e.g.*, 1 μamp/cm^2) charging current for operation.

2.3.2 Switching Speed Requirements

The switching capability of the fluid, and the control circuitry and software, must be matched to that required for the application. The latter may vary widely. For truly "active" (real-time) damping of motions typical of automotive primary suspensions, for example, switching times of the order of 10 ms are sufficient. For isolation devices, such as engine mounts that are required to remove higher-frequency motions, faster speeds (1 ms or less) may be needed. The switching speed required for a fluid coupling will depend upon the use. For some applications, the "soft" takeup of the drive that results from a slow fluid or a slow switch may be desirable.

III. Technical Barriers to Commercialization

3.1 Introduction

Any discussion of the possibility of developing viable devices containing ER fluids must recognize the challenges and limitations facing ER fluid technology. These problems include lack of both dispersion and chemical stability, excessive conductivity, thermal instability,

particle attrition, toxicity, corrosion and contamination, limitations on operating temperature range and performance and, most important for most real-world applications, high cost. At present, commercial applications are limited by the performance of the fluids that are available, not by any other significant consideration. (See Sections 5 and 6).

3.2 Dispersion Stability

Since all ER fluids with commercial potential are currently suspensions of a solid phase in a liquid (single-phase systems have been discovered, but are so far too costly and unexplored to offer commercial potential), the suspension must be stabilized to prevent settling. Separation could cause loss of fluid performance, plugging of flow paths, and other problems. Techniques to achieve suspension stabilization include:

- Density matching (by adjusting the density of the solid or fluid), *e.g.*:
  - by blending fluids
  - by adjusting the porosity or composition of solids
- Use of surfactants (effectively limited to water-containing systems; surfactants often increase conductivity)
- Use of smaller, more easily dispersed particles (but this can reduce the magnitude and speed of the ER effect)

At present, particularly for anhydrous systems for which surfactants are not readily available, density-matching appears to be the best approach.

3.3 Chemical Stability

The performance of ER fluids, especially those containing water, can change with time as a result of component loss through evaporation at elevated use temperatures or as a result of diffusion into and through containment materials. The suspended particles may also react with the base fluid over long periods of use. This can be overcome only by the avoidance of volatile components, the careful selection of materials to ensure inertness, and the avoidance of contamination of the fluid system. It is apparent that anhydrous fluids are inherently more stable than those containing water.

3.4 Excessive Conductivity

Many of the water-activated fluids investigated so far are excessively conductive. Some anhydrous systems are also surprisingly conductive, apparently due to interparticle transport processes. As noted, this can result in heating of the fluid, control problems, and the need for high-current high voltage controllers, a safety hazard.

Much more work is necessary to develop low conductivity systems of both the anhydrous and water-activated kind. The fluids developed by Filisko *et al.* are much improved relative to

earlier water-activated fluids, while the water-free systems developed by Block and others provide insight into means of achieving low-conductivity anhydrous systems.

It may be possible to achieve low to zero conductivity through careful material selection, but it is more likely that techniques such as particle encapsulation will be necessary to achieve total control over current leakage. Encapsulation may also be helpful in reducing particle attrition and in protecting the particle from undesirable chemical interaction with its environment.

The problems identified here may also be overcome by the development of lower voltage fluids – those that develop acceptable engineering performance at less than 1 kV/mm. Such fluids appear possible, based on unpublished data from Lord Corporation.

3.5 Particle Attrition

Surprisingly little evidence of particle attrition has been reported from studies of ER fluid behavior. However, most fluids have been used under "real-world" conditions for only very limited time periods, and there may not have been sufficient use time to develop measurable particle wear or fragmentation.

If attrition does occur, the fluid's performance could be adversely affected. Small particles are more subject to Brownian motion and other perturbations in the fluid and are less able to form the necessary fluid "structure" when the field is applied. They are also more prone to form agglomerates (which may settle) and to be reactive (because of their larger surface area).

Much more work is needed, particularly long-term testing under circumstances involving flow through orifices at high shear rates. It is not clear, for example, if encapsulation can help prevent attrition or whether mechanically soft particles are better than hard ones. In addition, it is not clear that the mechanical performance of the particles can be optimized independently of their electrical performance in the fluid.

3.6 Corrosion and Contamination

Many otherwise acceptable base fluids are difficult to contain, including:

Halogenated hydrocarbons in aluminum or magnesium alloys

Many solvents in natural and synthetic rubber

Water-activated systems in non-stainless ferrous alloys

It will be difficult with anhydrous fluids to exclude contamination by water, especially for devices which (such as automotive shock absorbers) will be exposed to harsh environments. With metallic containers or electrodes, corrosion of the metal can produce contamination

of the fluid. In the case of rubber (and some other polymers), leaching of components of the rubber may occur, leading to contamination of the fluid and a possible change of properties and performance.

Some engineering plastics may be adversely affected, particularly by halogenated solvents; gross attack or, in some cases, stress corrosion cracking, may occur. Non-water polar liquids used as activators may also result in some surprising interactions. Careful, long-term materials testing is required before commercial application of any ER fluid.

3.7 Toxicity and Disposal Problems

Many proposed ER fluids contain solvents that are now viewed as environmentally unsafe. For example, many of the most effective fluids contain halogenated hydrocarbons or similar compounds. One of the most effective base fluids is polychlorinated biphenyl (PCB), long used as a transformer fluid for its excellent dielectric properties and now banned as a suspected carcinogen. (Russian workers apparently still favor this fluid.) Since questions already are being raised about the disposal of the simple hydraulic fluid now used in shock absorbers for automotive use, it is likely that the more complex ER fluids will come under even more intense scrutiny.

Fortunately, there are a number of successful base fluids that are more environmentally acceptable (albeit not biodegradable), *e.g.*, silicone oils. It may be possible to develop inexpensive procedures for recovering and reprocessing ER fluids containing the more toxic or environmentally persistent fluids. Since this may become a requirement for almost any kind of fluid contained, for example, in automotive products, it may not be a relatively greater problem to deal with ER fluids in this way.

Most of the dispersed solid materials so far used are reasonably acceptable environmentally, but may present problems due to their stability or, in some cases, color. Many organometallic dyes are quite good candidates for anhydrous fluids because of their semiconducting nature. Again, reprocessing probably represents the best solution.

3.8 Operating Temperature Range

The current operating temperature range of ER fluids is generally limited by the freezing and boiling points of the base fluid at system pressure, or the volatility and stability of additives such as water. In some cases, reactivity of the fluid with containment materials or with the suspended solid may be limiting, but such fluids are unlikely to have sufficient long-term stability under any circumstances.

A number of fluids have wide liquid ranges and have proven to be useful base fluids, including silicone oils and perfluorinated polyethers. Aircraft hydraulic fluids have the right characteristics. Any system for use at elevated temperatures must also be anhydrous; loss of water will cause a loss of the ER effect. Those base fluids offering a wide operating

range generally have not been used as the base fluid for anhydrous systems. Further investigation is needed in this area.

The particles used in ER fluids are usually highly stable and seldom provide any constraint on use temperature. It is possible that some polymer particles (particularly polymeric electrolytes) might result in some limitation, but this has not yet been reported.

IV. Future Fluids

The maximum achievable, dynamically-measured shear strengths attainable with today's fluids are in the range of 1-5 kPa at field strengths of about 4 kV. Higher values have often been claimed, but close examination shows them to be the result of near-static measurements (*i.e.*, at very low shear rates) or due to particle interlocking (which can occur very easily in measurement systems that use capillary flow or which do not generate sufficiently high shear rates). Only dynamic measurements are significant for a material whose mode of use will be essentially dynamic.

As Duclos (1988) has recently shown, a value of 5-6 kPa is sufficient for such devices as engine mounts and dampers, but much higher values (up to 20 kPa) will be necessary for commercially viable large-scale, high-torque clutch applications. It seems likely that anhydrous fluids will soon exhibit values in the 3-5 kPa range with relatively low conductivities and, with further development, 15-20 kPa should be attainable within approximately five to ten years. It is likely that successful devices of the engine mount type will be available commercially very soon and that small, light-duty clutches will be feasible by 1994. Higher-performing fluids are needed, and even the development of light-duty commercial applications is currently limited by a lack of fluids demonstrating both sufficient performance and long-term stability.

The theoretical "upper bound" to the shear strength attainable by an ER fluid is not precisely known, although an estimate of 50 kPa at 5 kV/mm was reported by Conrad (1992). It seems likely that very high strength fluids may be those with relatively high zero-field shear strengths or viscosities – a limitation on their use in many applications. There are also limitations imposed by the maximum field that can be applied to the fluid before dielectric breakdown occurs or before conduction (and, hence, power consumption and heat generation) reaches unacceptably high levels. Thus, it seems likely that designers can reasonably anticipate fluids that will be about 5-7 times better in performance than today's (*i.e.*, with shear strengths in the 15-20 kPa range), but with some unacceptable trade-offs.

A particularly promising recent development is that of single-phase fluids consisting (so far) of liquid-crystal polymers dispersed in solvents (Yang *et al.*, 1991). One of these has given shear strengths close to 7 kPa. Much more work on these fluids is necessary before their commercial potential can be understood.

It is clear that there will be no single successful fluid; instead, there will be "horses for courses", with very high performance, high solids content, high zero-field viscosity fluids being

suitable for some applications, and lower-performing, less viscous fluids for others. As noted in Section 3, there may be other factors that determine or limit fluid selection, such as toxicity disposability or use temperature range.

V. Possible Applications for ER Fluids and Devices

5.1 Introduction

With the dual objective of achieving almost instantaneous response and reducing the complexity of transmission of mechanical forces through linkages or hydraulic tubing, much effort has been expended in developing sophisticated prototype applications for ER fluids. Use of ER fluids can potentially enhance reliability by simplifying device design and may also permit a reduction in component size and weight. Some of the applications and devices in the development stages are discussed below; none have been commercialized. The primary limitation has been the lack of fluid performance and durability (see Section 3).

5.1.2 Isolation Devices

Early, unpublished work by Air-Log, Ltd., in the U.K. focussed on the development of isolation systems for helicopter and aircraft "stores" – *i.e.*, externally mounted weapons, radar enclosures or fuel tanks. These can be adversely affected by the vibration inherent in helicopter operation, particularly with the newly-developed, aerodynamically-efficient "rigid" blades or by aerodynamic billeting or rough-runway vibration or conventional aircraft. Active isolation systems are now in use, but they use conventional hydraulic technology.

Most activity in this category has been aimed at automotive engine isolator (engine mount) development. Fig. 1 shows the construction of a prototype ER fluid-based engine mount. Patents have been issued to Barry Wright Corporation and Lord Corporation, and work is known to be in progress at, or with the involvement of, Daimler-Benz, Volkswagen, General Motors, Metzeler Kautschuk (now a Pirelli subsidiary), Bridgestone, and others.

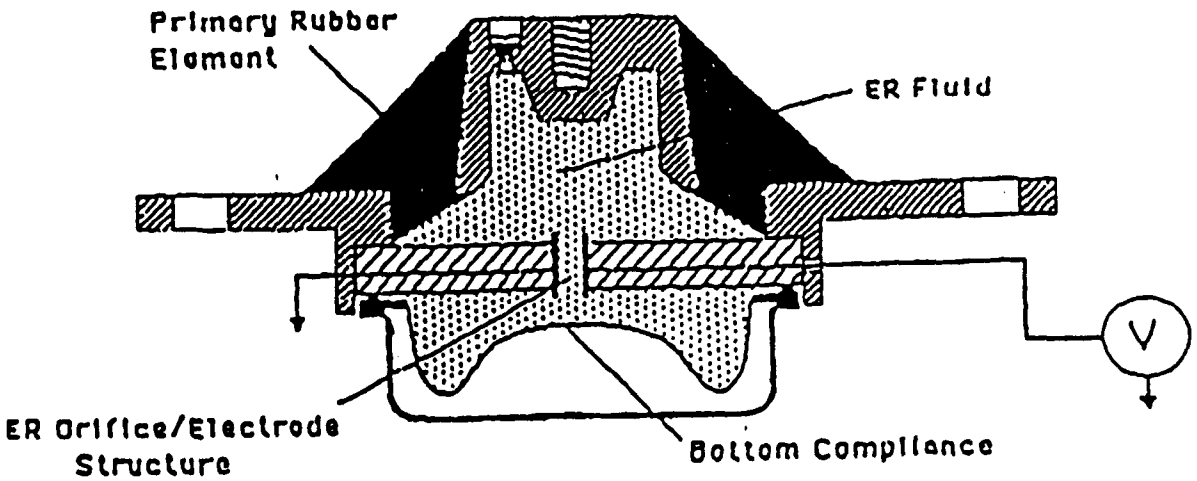

Fig. 1. Electrorheological Fluid Mount

Automotive engine mount design only recently progressed from the conventional rubber-and-metal devices used for many years in various geometries to the use (not universally) of so-called "fluid mounts": passive devices usually filled with antifreeze and containing a short tube which separates two fluid-filled chambers and is referred to as an "inertia track". As the engine moves vertically relative to the frame to which it is attached, fluid is pumped through the inertia track. The length of the track, as well as certain other features of the system, permit it to be "tuned" to optimally suppress the most troublesome frequency encountered in normal operation. Some passive fluid mounts can, with the aid of a simple, built-in fluid decoupler, be tuned to two frequencies or to a narrow range of frequencies.

A passive fluid mount can also be made active by the inclusion of a fast-acting mechanical valve in the inertia track, capable of being controlled (*i.e.*, switched on/off) in real-time in response to sensor inputs indicating engine motion. Prototype devices of this kind, using antifreeze or hydraulic fluid, have been developed. They have been very effective, but are noisy. Since an ER fluid valve contains no moving parts, and since flow volumes are small and shear rates relatively low for most of the use cycle, replacement of the conventional antifreeze solution by ER fluid makes for a very simple - and quiet - mount design. In this case, an ER valve separates the two compartments.

Products of this kind using ER fluids are under development at a number of centers. Since fluid shear strengths of only 1-2 kPa are required for this application, fluids of adequate performance are available, and commercial products are likely within a relatively short time. Many of the shortcomings of current ER fluids are immaterial for simple isolator applications of this type; practical devices are possible today, provided that problems of fluid stability, materials compatibility and useful temperature range can be resolved.

5.1.2 Hydraulic Dampers

Most hydraulic dampers utilize the energy dissipation that results from the flow of hydraulic fluid through one or more small orifices to generate the damping effect. Flow rates and volumes in this case are relatively high, and significant local temperature excursions result in the fluid. Current "active dampers" under development for automotive suspension applications use conventional damper fluids but replace the orifice with a fast-acting valve (in combination, as with engine mounts, with appropriate control software) to provide real time control of the damping coefficient.

Because automotive primary suspension dampers (and the equivalent for industrial application) of conventional design require relatively high flow and shear rates, and hence the possibility of high temperatures and particle attrition, they represent a major challenge for the ER fluid developer. The orifice or "active damper" valve, as with engine mounts, can be replaced with an ER fluid valve of the parallel plate or concentric plate kind, but much higher flow rates and shear forces must be controlled than in, for example, the engine mount. In this case, Duclos (1988) estimates that ER fluid shear strengths of 5-6 kPa are required <u>under high flow conditions</u>, significantly higher than can easily be attained by today's best fluids.

Primary dampers that utilize ER fluids have been prototyped but, because current fluid performance is relatively poor, have been much larger than desirable to accommodate the necessary ER valve surface area. A cross-section of the piston in a prototype shock absorber is given in Fig. 2. A commercial damper product is unlikely before 1995, although development work is reportedly continuing at a number of centers in the U.S., Europe and Japan. It may be more appropriate to consider totally new concepts in damper design (or even some very old ones, such as variable-drag clutch-type dampers), rather than to modify today's conventional hydraulic damper.

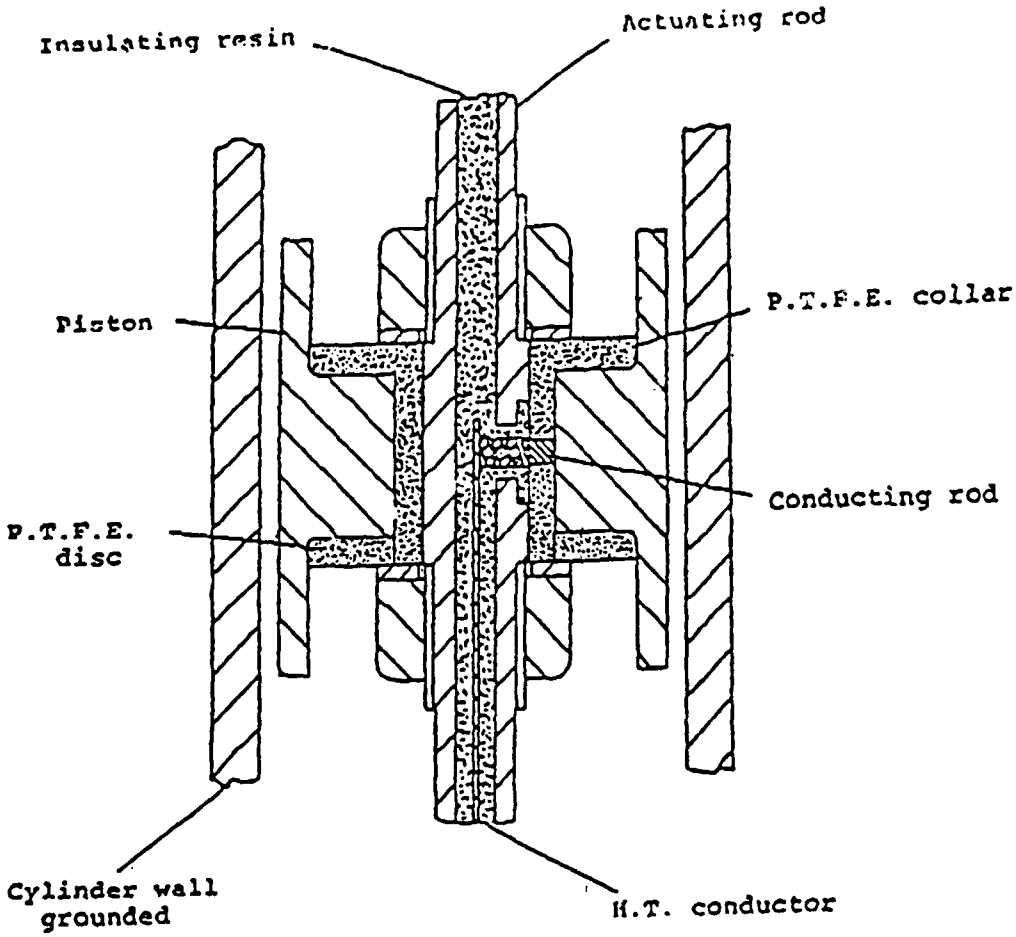

Fig. 2. Cross Section of Piston of Prototype Shock Absorber. (Source: University of Liverpool)

5.1.3 Complex Motion Control — Combined Primary and Secondary Damping

The ultimate in automotive isolation systems may come from coupling "active" primary (road suspension) and secondary (*e.g.*, engine suspension) isolation control. For example, active primary dampers will provide more effective results if combined with active engine mounts to coordinate damping of engine motions (which make a major contribution to ride and "feel") with total body motions.

In some vehicles in which the engine or suspension is mounted on a separate sub-frame, there is the possibility of adding tertiary control, *i.e.*, of controlling motions of the sub-frame relative to the mainframe or body as well as engine and primary suspension motions. Clearly, there is the potential to apply this technology in other fields. These possible applications will be more readily attainable with ER fluids since the damper and isolator hardware will be simpler to design and implement.

5.1.4 Torque Transmission Devices

Torque transmission devices include all forms of fluid couplings and clutches. A schematic of a simple ER clutch is shown in Fig. 3. Great interest has developed in applying ER fluids in this area but, except for devices of very small load capacity (such as accessory drive clutches for possible automotive use), current fluid performance is not up to the requirements. Duclos (1988) estimates that fluid shear strengths of up to 20 kPa will be required to permit the design of an automotive transmission clutch of reasonable dimensions, cost, and power consumption. Since fluids for this application should also have a very low zero-field viscosity to minimize open-clutch drag, this application represents a very severe challenge for the fluid developer.

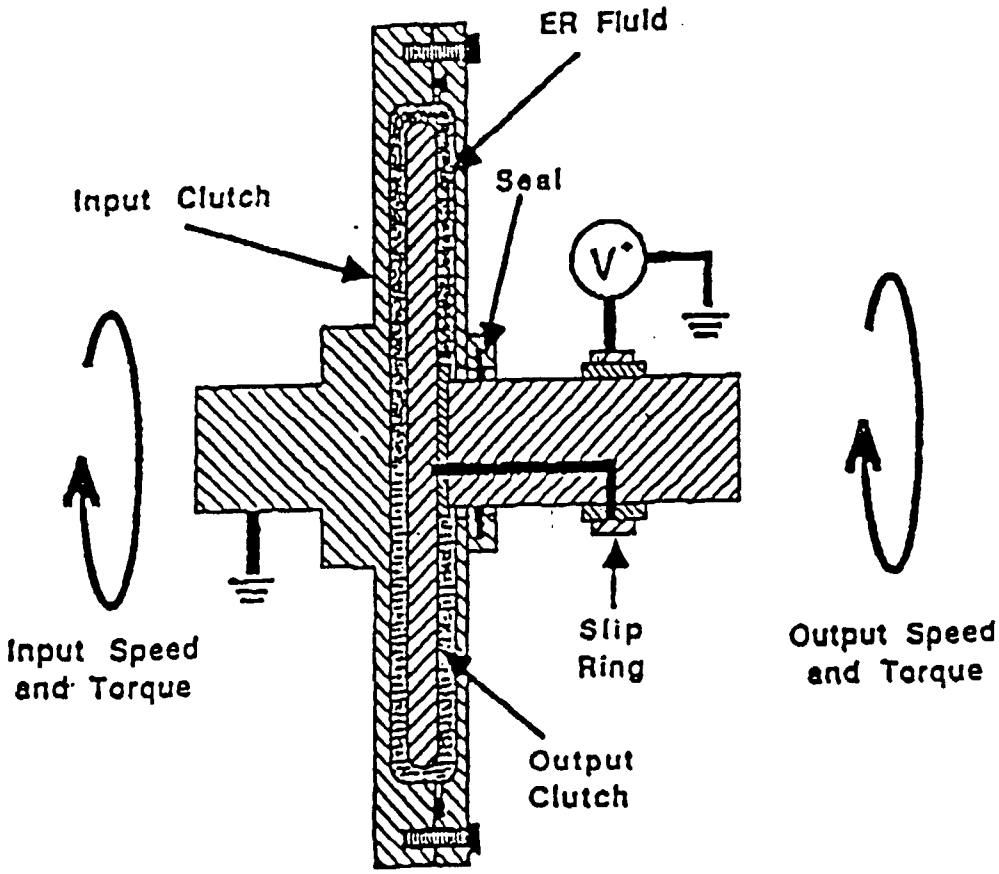

Fig. 3. Example ER Fluid Clutch Geometry

Clutches have been prototyped in many centers. Almost every group involved in ER fluid applications development has reported activity in this area. Winslow, Stangroom, Sproston *et al.*, and many others have reported development efforts. Commercial application of this technology, however, is likely to be severely limited for some years by the need for far greater fluid performance (field-on shear strength) than is currently available.

Low-torque applications (*e.g.*, automotive alternator drive clutches) may materialize within 5-10 years, but heavy-duty (*e.g.*, transmission) applications seem unlikely in the near term, despite the current interest level. At present fluid performance levels, it is impossible to get enough clutch surface area into an acceptable envelope. Furthermore, the resulting power requirements in the engaged condition (with consequent overheating problems) are much too high with present fluids. Fluid developments are making excellent progress toward higher shear strengths and lower current demands, and a suitable fluid should be available within 5-7 years.

ER fluids have frequently been proposed for use in fluid couplings, such as those used in automotive all-wheel drive (AWD) systems or in variable-speed drives for truck cooling fans. For light-duty applications, such as for fan drives, ER fluids may be feasible. For heavy-duty applications, such as AWD systems, currently available fluids would not result in an engineered "package" of acceptable size, complexity and cost. There is a possibility, however, that the development of higher performance fluids will lead to the possibility of controlled-slip fluid couplings. Use of these would result in less energy dissipation and hence better vehicle fuel mileage. Devices of this kind could also be used in automotive traction-control systems. These prospects are discussed further in Section 6.

5.1.5 Structural Damping

Thompson (1987) and others have suggested that ER fluids can be used for structural damping. If the fluid is placed between parallel electrodes in a thin film along the axis of maximum shear (typically, the centerline) of, for example, a bending beam or plate, application of a field should result in enhanced shear damping of the structure. It has been shown experimentally that this is the case, and that the rate at which a vibrating cantilever beam, for example, is damped in this way is very much faster than air damping.

This has some potential applications in the control of "ringing" in space structures and perhaps of panel "booming" in aircraft or automobiles. However, the technology is still a long way from being demonstrated in real-world applications. The same result can be achieved using "ER solids" – typically elastomers containing a dispersion of possibly aligned semiconducting particles. Application of a field appears, in this use, to increase the effective shear modulus of the materials.

5.1.6 Hydraulic Valves

An ER valve typically comprises an ER fluid flowing through a slot or annulus. There is only a small pressure drop when no field is applied. When an electric field is applied across the flow path, resistance to the flow can be accurately and reproducibly controlled, at least

at low flow rates. Provided that a critical pressure drop is not exceeded, flow can be completely stopped. The valves have no moving parts and promise high reliability.

5.1.7 Actuators

By installing an ER valve to enable it to act as (or control the movement of) a piston in a hydraulic cylinder, motion can easily be controlled, permitting the development of fast response.

5.1.8 Brakes

A clutch-like device (using parallel rotating plates or concentric cylinders, for example) can be used as a brake. Relative motion can be (almost) instantly or gradually stopped as the fluid's flow resistance increases with applied voltage. Fluid heating causes stability problems (unless a cooled circulation system is used).

5.1.9 Jigs and Fixtures

A range of jigs and fixtures could be designed and built for machining and testing operations. GEC (U.K.) has developed a programmable pin jig for automatic testing of printed circuit boards. Thompson and Gandhi (Michigan State University) are investigating flexible fixtures using ER fluids, in collaboration with the Industrial Technology Institute in Ann Arbor.

5.1.10 Spooling and Tension Control/Torque Controller

An ER fluid device for spooling and tension control (in effect a "slippable" clutch) has been developed by Electrorheological Fluids Developments, Ltd. (U.K.). A number of developers have suggested the use of a similar device for exercise equipment. In this case the clutch would provide variable "drag" in a rowing simulator, cross-country ski simulator or the equivalent.

VI. Potential Uses for ER Fluids in Energy-Saving Applications

There are a number of applications of ER fluids in which modest energy savings might be achieved. However, little or no work has been documented in this area. The control of ER fluids requires minimal energy; although the voltages required are high, current flows are extremely small (ideally, zero) and power consumption is typically in the 0.1-1.0 watt range. In the possible energy-saving applications discussed below, this becomes vanishingly small compared to the savings that might be achieved. Only devices requiring (with present fluids) large electrode surface areas, such as multi-plate clutches or fluid couplings, or those using high-conductivity fluids, could use sufficient energy for consumption to be a consideration.

Examples include:

(1) Hydraulic devices and systems, such as active shock absorbers and vibration isolators, in which parasitic energy losses due to (*e.g.*) vehicle vertical motion can be minimized

by optimizing damper action. (However, similar results can be achieved by active hydraulic damper systems using conventional fluids). Several sources have estimated that optimal savings for a vehicle weighing 3000-4000 lbs on a surface of typical roughness would be 0.25-0.5 HP (0.19-0.37 kW). The control policy implemented for maximum energy savings would not necessarily correspond to that required for optimum ride improvement, the normal objective of such systems.

(2) Fluid couplings used in full-time variable torque transmission systems, especially those in which energy dissipation can be reduced without disadvantage under most operating conditions by using the coupling in the locked (non-slipping) mode. While energy savings could be significant for old-type 4WD systems (of the order of 5 HP or 3.7 kW), savings for typical, state-of-the-art automotive AWD systems, which are significantly more efficient, would be substantially less - about 1.5 HP or 1.1 kW. This would translate into fuel savings of about 1 mpg or 4% for a typical AWD vehicle.

(3) Drive-decoupling devices for vehicle engine accessories (such as the alternator or cooling fan) which could be used in intermittent operation. Conventional solenoid-driven clutches or viscous couplings could be (and are) used for this application, but are both bulky and energy-consuming. Decoupling of all engine accessories (other than air conditioning) results in a savings of between 0.5 and 2.0 HP, depending upon accessory demand (*i.e.*, upon battery level, cooling demand, *etc.*). Maximum (intermittent) fuel savings for the average automobile would be about 1 mpg with average fuel savings in the 0.3 mpg range.

(4) A number of applications suggested by workers in the former USSR, if realizable, could result in energy savings compared to conventional alternatives. These include the use of ER fluids in dielectric motors, motion conversion devices and actuators and, perhaps more conceptually, in so-called "liquid power converters" (see Section 6.1). More realistically, significant energy savings may be attainable through enhanced heat recovery achieved in heat exchanger systems that utilize the improved (or at least modified) conductive and convective properties of ER fluids in the presence of electric fields. None of these applications have been evaluated or reported on by western workers, but what is now known about ER fluids suggests that they are feasible.

Additional energy-saving opportunities will no doubt be identified as soon as ER devices enter real-world application - this is the normal outcome of the commercialization of technology. But this cannot happen until fluids are developed that make these applications possible. Once again, the focus of future work must be on the development of a better fundamental understanding of ER fluids and the (probably resulting) development of fluids that offer the engineering properties needed for such applications.

VII. Summary and Conclusions

There have been numerous and very diverse attempts to use ER fluids for a variety of automotive, aerospace and other applications. None have been commercially successful, primarily because the ER fluids available at the time of development did not offer adequate mechanical performance (field-on shear strength under flow conditions), stability, compatibility with containment materials or durability (usually, in the latter case, due to particle attrition). This has been the result, in part, of a lack of collaboration between fluid developers and applications developers. (This is still the case; few laboratories still active in the field contain both.) However, more seriously, there is a severe lack of understanding of the physics and even the chemistry of the various categories of fluid that have been reported in the literature or developed commercially (and hence NOT reported). Little is understood of the mechanism by which the fluids develop shear strength in the presence of an electric field (although recent modeling studies are beginning to throw some light on this issue), or of the mechanisms of, for example, interparticle interaction and charge transfer, if any.

In the more practical arena, there have been few studies of fluid stability (other than measurements, for early fluids containing water, of settling rate as a function of, *e.g.*, surfactant level). Little is known about particle attrition (other than that it occurs in some cases in fluids subjected to high shear rates in small orifices) or the influence on this problem of the mechanical properties of the particle. In fact, even the optimum particle size for most applications is not established. Little work has been reported on the compatibility of fluids with materials of containment (including the electrodes through which the electric field is applied to the fluid), despite occasional observations that this is a very serious problem (for example, fluid contamination caused by leaching of plasticizer from engine mount rubbers is a major limitation to ER fluid use in this application). Little concern has been shown for fluid toxicity (especially in Russia where the fluid of choice is polychlorinated biphenyl (PCB), a noted carcinogen). While some fluids, such as those developed by Filisko and by Lord, are capable of operation at relatively high temperatures, none have been evaluated for a sufficient length of time at elevated operating temperatures.

This list of requirements is not all-inclusive.

Clearly, ER fluids are not yet sufficiently well understood fundamentally, nor are their engineering properties sufficiently well documented, to justify their uses in demanding engineering applications. Possible immediate uses might include variable-resistance devices in exercise equipment, and perhaps active vibration isolation devices operating under relatively mild, constant conditions (which would rule out use in automotive engine mounts).

Support of work on the development of applications should not be considered by DOE to be of high priority at this time. Sufficient information is available from past development efforts to provide adequate guidelines to those trying to develop fluids of sufficient performance (*e.g.*, fluids offering true dynamic shear strengths of between two and seven times the values achieved so far are required). Instead, funding and technical resources should be focussed on:

1. Development of standardized measurement methods for most important properties.

2. Development of a sufficient understanding of the physics, and the chemistry, of the fluids under development.

3. Development of an understanding of mechanisms of charge transfer in ER fluids of various types.

4. Development of models that provide an understanding of the dynamic particle-particle interactions that seem to be important in determining the mechanical behavior of ER fluids under flow conditions.

5. Development of extensive engineering data on fluids that offer dynamic shear strengths in the "useful range" - *i.e.*, 3 kPa and above. These properties should include the temperature and field dependence of dynamic shear strength, the rate at which it is developed under field-on, and lost under field-off, conditions, and electrical conductivity under realistic simulation of use conditions.

6. Development, for those fluids that offer real utility, of data bases containing information on materials compatibility (much of which exists for at least the pure base fluids), toxicity, sensitivity to particle attrition, sensitivity to moisture and other possible contaminants (including wear particles from metals and other containment materials).

References
(Not Comprehensive)

Andrade, E. N. da C. and C. Dodd, *Proc. Roy. Soc.* **187A**, 296-337 (1946).

Argueles, H., H. R. Martin and R. Pick, *J. Mech. Eng. Sci.* **16**, 232-239 (1974).

Arp, P. A., R. T. Foister and S. G. Mason, *J. Coll. & Int. Sci.* **12**, 4 (1980).

Block, H. and J. P. Kelly, U.S. Patent 4,687,589 (1987); *J. Phys. D: Appl. Phys.* **21**, 1661, 1988.

Conrad, H.,Y. Chen and A. F. Sprecher, Proceedings of the Third International Conference on ER Fluids, October 15-16, 1991 at Southern Illinois University, Carbondale IL. Published as "Electrorheological Fluids: Mechanisms, Properties, Structure, Technology and Applications", p 195, R. Tao (editor), World Science Publishers (1992).

Duclos, T. G., SAE Paper 870963 (1987).

Duclos, T. G., SAE Paper 881134 (1988).

Duff, A. W., *Phys. Rev.* 4, 23 (1896).

Filisko, F. E. and W. E. Armstrong, U.S. Patent 4,744,914 (1988) and 4,879,056 (1989).

Honda, T. and T. Sasada, *Jap. J. App. Phys.* 16, 1775-1783 and 1785-1791 (1977).

Kelly, J. P., M.Sc. thesis, University of Liverpooi (1986).

Klass, D. L. and T. W. Martinek, *J. App. Phys.* 38, 67-74 and 75-80 (1967).

Konig, W., *Ann. Phys.* 25, 618 (1885).

Qin, A., Ph.D. thesis, University of Liverpool (1982).

Quinke, G., *Ann. Phys. Chem.* 62, 1 (1897).

Shulman, Z. P. *et al.*, *J. Non-Newtonian Fluid Mechanics* 8, 29-41 (1981); and numerous other papers. (See Section L of this report.)

Sproston J. L. *et al*, Int. Phys. Conf. Ser. No. 66, Electrostatics 1983, Oxford, U.K., 1983.

Sproston J. L. *et al.*, *J. Electrostatics* 15, 275-283 (1984).

Stangroom, J. E., *Phys. Technol.* 14, 290 (1983).

Stangroom, J. E., U.K. Patent 1,501,635 (1978).

Stangroom, J. E., U.K. Patent 1,570,234 (1980).

Uejima, H., *Jap. J. App. Phys.* 11, 319-326 (1972).

Winslow, W. M., U.S. Patent 2,417,850 (1947).

Winslow, W. M., *J. Appl. Phys.* 20, 1137-1140 (1949).

Yang, I. K. and Shine, A.D., Paper presented at Soc. of Rheology meeting, Oct. 20-24, 1991; *J. Rheology* 36, 1079-1104 (1992).

5.2 Who's Who in ER Research and Development

Edward A. Collins

This brief survey of participants in ER research and development (R&D) is not an exhaustive listing, such as that provided in the surveys by Frost and Sullivan and others cited in § 7.1. Instead it focuses on the individuals, companies, and institutions (academic, government and private) who are the major players. Inclusion in the lists which follow is based on a number of information sources: attendance at ER symposia and meetings, patents issued, patent applications, and open literature publications, site visits, and personal contacts. It should be pointed out that drawing conclusions from a single source such as the patent or publication literature could easily result in misleading conclusions, since most industrial R&D is considered to be highly proprietary. Hence, for example, it is known that Lubrizol has an active ER program, yet this could not be concluded from publications or patents.

Attracted by the tremendous market potential of ER devices, reported to be around 20 billion dollars per year, a large number of companies jumped into the field. Expecting to reach profitable production in a few years and with modest R&D expenditure, many of them became discouraged by the problems they encountered, and reduced their activity or dropped out altogether. The drop-out list is almost as impressive as the list of active participants. It includes major U.S. companies such as American Cyanamide, Clevite, Dow Chemical, and Hercules. U.K. dropouts include ICI and Air Log. Companies which have significantly reduced their ER activity include Ford, Ethyl, Lord, and General Motors.

The tables which follow show the major participants in ER R&D by country: for the U.S., industrial and academic research are reported separately. To these tables we must add participants in the former USSR (see § 6.1) and in The People's Republic of China (see § 6.4). Although there was earlier activity in Leningrad and elsewhere, the remaining active center in the former USSR is the Heat and Mass Transfer Institute in Minsk, Byelorus, where the activity focuses heavily on devices.

Appendix B contains reports of visits to and contacts with many of the participants, both in the U.S. and abroad. It is significant that relatively few companies are engaged in development of ER fluids, even though this is where the major breakthroughs are needed. Research on ER fluids is being conducted at institutions in the U.S., the U.K., France and China, but with very limited support.

Table 5.2.1 Major U.S. Industrial Participants in ER R&D

Dow Corning	Lubrizol/Rheoactive
Ethyl	Mobay
General Motors	TRW
Lord	Ford

Table 5.2.2 Major U.S. Academic Participants in ER Research

U. of Michigan	U. of Connecticut
U. of Illinois	U. of Virginia
Stanford U.	U. of Southern Illinois
Cal Tech	Lehigh U.
U. of Chicago	Columbia U.
North Carolina State U.	Michigan State U.

Table 5.2.3 U.S. Government Participants in ER R&D

Sandia National Lab.	Army Materials Lab.
Naval Research Lab.	

Table 5.2.4 U.K. Industrial and Academic Participants in ER R&D

Advanced Fluid Systems	Sheffield University
Cranfield Institute	University of Liverpool
Cookson	University of Bristol
Castrol	University of Surrey
ER Fluid Development	

Table 5.2.5 German Participants in ER R&D

Bayer	Metzeler/Pirelli
BASF	Teves
Bosch	Z. F.
Freudenberg	

Table 5.2.6 Japanese Industrial and Academic Participants in ER R&D

Toyota	Tokai Rubber
Bridgestone	Yamagata University
Nissan	Kayaba
Asahi Chemical	NTN
Showa Denko	Toshiba

Table 5.2.7 Companies Involved in ER Fluid Development

Bayer	Lord
Dow Corning	Bridgestone
Ethyl	Asahi Chemical
ER Fluid Development UK	Nissan
General Motors Research	Toyota
Lubrizol	Toshiba

5.3 Mechanisms of ER Effects

C.F. Zukoski

I. Introduction

The electrorheological (ER) response is characterized by the gelation of a suspension in the presence of an applied electric field. Associated with this gelation is a large increase in the suspension's stress transfer capabilities. The reversible nature of the ER response, the large changes in viscosity and yield stress, and the short response times observed in these systems give rise to many useful technological applications. Unfortunately, implementation of ER technology is impaired by poor understanding of the mechanisms which determine the ER response.

The mechanism of structure formation and the resulting increase in stress transfer capabilities is generally attributed to polarization of the particles and of the continuous phase, and to the resulting long-range interparticle forces (as originally proposed by Winslow, 1949). The most successful model of ER response is based on the concept that particles polarize in the presence of the electric field, and the resulting dipoles interact to align head-to-tail in the applied field. The increases in suspension viscosity and yield stresses observed in ER suspensions are associated with breaking these polarization "bonds" and the field-induced structures. Thus, in understanding the mechanisms giving rise to the ER response, one is concerned with how materials polarize, magnitudes of local electric fields, action of hydrodynamic forces in dense structured suspensions, and the interaction and dynamics of particles in suspensions in the presence and absence of electric fields.

One of the key issues facing advances in ER technologies lies in controlling the magnitude of the response. While many factors operate in determining ER behavior, the relative polarization of the dispersed phase lies at the heart of investigations of mechanisms operating in ER suspensions. Several polarization mechanisms are possible. These include bulk polarization of the two phases (*i.e.*, the motion of bound or free charges within the particulate and continuous phases without transfer of charge across the interface), surface polarization (where adsorbed species migrate across the particle surface), and double-layer polarization, where the cloud of free ions near a charged interface polarizes in response to the applied field. In addition, there are variants of these polarization mechanisms such as occur when free charges are produced in a semiconductor by exposure to light and the subsequent polarization of electron/hole pairs within the particles, in systems carrying intrinsic dipole moments, and polarization which occurs due to free and bound charges when there is a flux of current across the interface between discrete and continuous phases. Each of these polarization mechanisms will give rise to different dynamic responses and strengths

of particle interactions, but all possess general features that fit well within the polarization model of the ER response. (General reviews of mechanisms operating in ER suspensions are found in Gast 1989, Jordan 1989, Block 1989 and Deinega 1984).

Since the ER response has at its root the relative ability of particles and the continuous phase to polarize, attention to mechanisms of polarization, the influence of additives and surface phases on the ability of phases to polarize, the magnitude of the local electric field, and the ability of additives to alter the local field are central to understanding and optimizing ER response. Progress in understanding and ability to predict the ER response on the basis of material properties is rapidly advancing. However, notable voids exist in understanding experimental results and in development of predictive models capable of guiding the development of ER fluids for different applications.

The mechanics of dense suspensions has been and continues to be investigated in depth, especially the flow behavior of colloidal suspensions with centro-symmetric pair interaction potentials. While these studies are very important in understanding ER suspensions, ER fluids are essentially different, due to the symmetry-breaking nature of the interaction potential which gives rise to nonsymmetric stress tensors. At the particulate level, however, the models developed to describe more conventional dense suspensions are directly transferable. For example, recent simulations of ER suspensions using techniques developed to describe the continuous shear properties of hard-sphere suspensions, but altered to include polarization interactions, have proven successful in describing ER suspensions (Bonnecaze 1992b). Thus while continued research on dense suspension mechanics is of importance to ER technology, many of the key advances will come from adapting currently available formalisms to the interactions between polarized particles. As a result, rather than focus on research needs in colloidal interactions and suspension rheology in general, this summary focuses on research needs of particular importance to advancing the field of electrorheology, recognizing that these advances will build on the more general fields of colloid science, electrochemistry, physical chemistry, and synthetic chemistry.

The following sections lay out the rudiments of the polarization model for the ER response, pointing out the respects in which the polarization model has been successful. A discussion then follows pointing out where the polarization mechanism has failed, and places where the polarization mechanism has seen little application. Finally, research needs are discussed.

II. The Polarization Model

In its simplest form, the polarization model treats the particles as spheres of diameter s and relative permittivity ϵ_p suspended in a continuous phase of viscosity η_s and relative permittivity ϵ_s. Upon application of a DC electric field, the particles polarize. A pair of such particles feel a force written (Gast 1989);

$$F_{ij}(r_{ij},\theta_{ij}) = \frac{3}{16}\pi\epsilon_0\epsilon_s s^2\beta^2E^2\{(\frac{s}{r_{ij}})^4[(2f_{\parallel}\cos^2\theta_{ij}-f_{\perp}\sin^2\theta_{ij})e_r+f_{\parallel}\sin 2\theta_{ij}e_\theta]\} \qquad (1)$$

where F_{ij} is the electrostatic polarization force on sphere i located at the origin of a spherical coordinate system due to sphere j at (r_{ij}, θ_{ij}). The applied field is assumed to be uniform ($E = Ee_z$), and e_r, e_θ and e_z are unit vectors pointing in the r, θ and z directions respectively. ϵ_0 is the permittivity of free space and $\beta = (\epsilon_r-1)/(\epsilon_r+2)$, where $\epsilon_r = \epsilon_p/\epsilon_s$. The f_k are dimensionless functions of pair separation and ϵ_r, and approach 1 as $r \rightarrow \infty$ and as $\epsilon_r \rightarrow 1$, i.e., where interactions become pairwise additive. The polarization model thus predicts that the force between two particles scales as E^2 and increases with ϵ_r through β and the f_k's.

With the particles initially spaced at a distance r and the field turned on, the particles feel an attraction if their line of centers is aligned with the field, a repulsion if the line of centers is perpendicular to the applied field, and, for all other relative positions, a torque attempting to align the interparticle axis with the field. In response to the electrostatic polarization forces, the particles accelerate to a constant translational velocity such that viscous drag balances the polarization forces. For typical particle sizes and field strengths, inertial effects are of little importance. A characteristic time scale $t_s = 16\eta_s/((2\epsilon_0\epsilon_s\beta^2E^2)$, and an electrostatic polarization force $F_{es} = 3\pi\epsilon_0\epsilon_s s^2\beta^2E^2/16$ (and the corresponding stress scale $\sigma_s = 3\pi\epsilon_0\epsilon_s\beta^2E^2/16$) can be extracted from this model.

In dense suspensions, the local electric field is altered by the presence of other particles. This leads to an enhancement of the pair interaction over that given above. Several methods have been developed to address the issue of the multibody effect, all of which require knowledge of the microstructure of the suspension (Bonnecaze 1992b, Adriani 1988, Klingenberg 1991a,b)

Based on various levels of approximation for multipole ($f_k = 1$), multibody and hydrodynamic interactions, several simulations of structure formation and stress transfer properties in ER suspensions have been carried out. The successes of the polarization model can be summarized as follows.

The polarization interactions in Eq. 1 provide the correct qualitative features for the structures observed in ER suspensions (providing that the simulation's short-range repulsion, which keeps particles from overlapping at small separations, is of sufficiently short range). The simulated and experimentally observed structures consist of branched strings and columns which are many particles wide and are aligned with the electric field. An example of experimental and simulated structures is given in Fig. 1.

Both experiments and simulations show that, under the action of shear perpendicular to the field, columns sustain small strains in an elastic manner. Under continuous deformation, the structures densify to form larger clusters which ultimately reach a steady-state cluster size distribution (Klingenberg 1990). Calculations using interactions given in Eq. 1 indicate that, if particles could relax into the lowest free energy state, the structure would consist of a single body-centered tetragonal crystal (Tao 1991a). The existence of structures of this type in electrified ER suspensions has been confirmed (Tao 1991b).

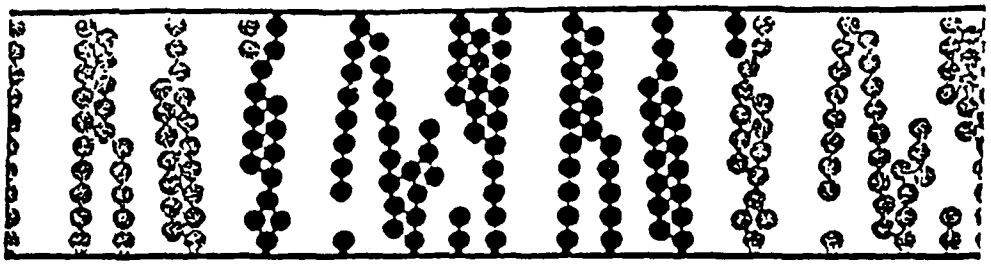

a

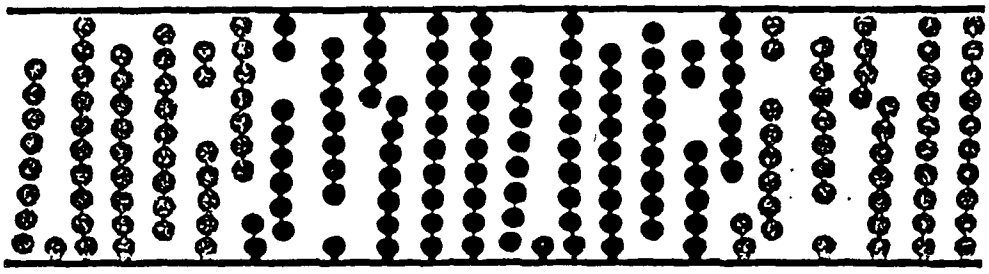

b

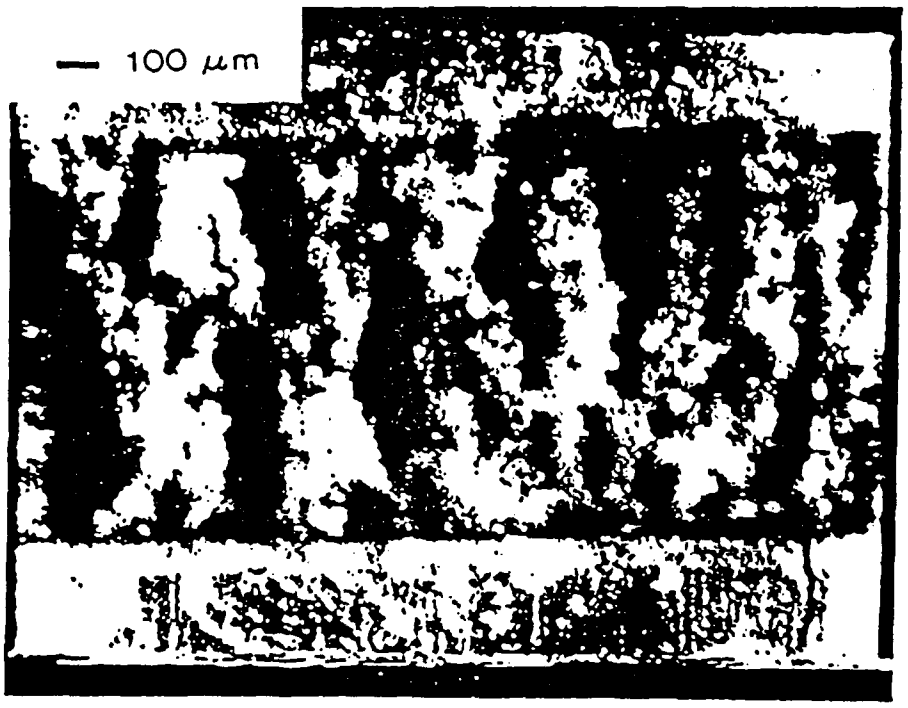

c

Fig. 1. Sphere configurations for ER suspensions. (a) Simulation after 10^4 time steps, (b) simulation after 10^4 time steps using alternative f^* and (c) a 2D experimental system of silica spheres in corn oil.

The time for an initially random suspension confined between parallel electrodes to form a percolating strand after the electric field is turned on has been both simulated and measured for a monolayer of particles. The polarization model predicts that the percolation time t_p scales with E^2, depends on the dimensions of the system under observation, and has a power-law dependence on particle density, yielding $t_p \approx \phi^{-3.9}$ for an electrode gap width to particle diameter ratio (l/s) of 12. The volume fraction exponent increases with l/s. These predictions have been quantitatively verified in several experiments covering a wide range of particle density, particle type, field strengths and values of l/s. The agreement between model and experiment indicates that, while the strength of the resulting structures is dominated by short-range interactions, the kinetics of structure formation is dominated by long-range interactions (*i.e.*, in the point dipole limit) (Klingenberg 1991c, Hill 1991).

The polarization model suggests that, in the absence of colloidal forces, stress transfer properties should be dominated by polarization and hydrodynamic interactions. This recognition led to the development of the Mason number Ma, which is a ratio of hydrodynamic to polarization forces acting on a particle (Marshall 1989).

$$Ma = \frac{\eta_s \dot{\gamma}}{2\epsilon_0 \epsilon_s \beta^2 E^2} \tag{2}$$

Here η_s is the viscosity of the medium. The Mason number suggests that, for large particles where thermal motion is unimportant ($\lambda = s^2E^2/kT >> 1$), there is a field strength *vs.* shear rate superposition such that $\eta(E,\dot{\gamma})/\eta_\infty$ is a universal function of Ma for a given suspension. (Here η_∞ is the high-shear limiting viscosity of the dispersion.) As demonstrated in numerous data sets at low and intermediate field strengths, such a superposition is commonly observed for variations in E, $\dot{\gamma}$ and η_s. The scaling observed experimentally has recently been observed in a variety of simulations which capture the experimental data in a quantitative manner. Figs. 2 and 3 show the superposition of experimental data using the Mason number scaling and the predictions of the simulation model of Bonnecaze and Brady (Bonnecaze 1992b).

ER suspensions are often observed to display a dynamic yield stress at small Ma (low $\dot{\gamma}$ and/or high E). Several models for the dynamic yield stress have been put forward. The most detailed are those of Bonnecaze and Brady (Bonnecaze 1992a), who describe calculations for an idealized microstructure consisting of strands one particle wide arranged in a periodic array, and of Klingenberg (Klingenberg 1991a,b), who determined yield stresses for suspensions between parallel plates as the shear rate is reduced to zero after the suspension structures have evolved to a steady-state cluster size distribution. The values of Bonnecaze and Brady are above those of Klingenberg, as would be expected for the idealized geometry chosen. Both simulations predict that the yield stress is independent of particle size, increases as E^2 and is a strong function of ϵ_r. The simulations also show that the yield stress reaches a plateau as volume fraction is increased. For a wide variety of experimental systems, the yield stress is observed to scale as E^2 and to be a strong function of ϵ_r, and the plateau in the yield stress *vs.* volume fraction curve has been confirmed.

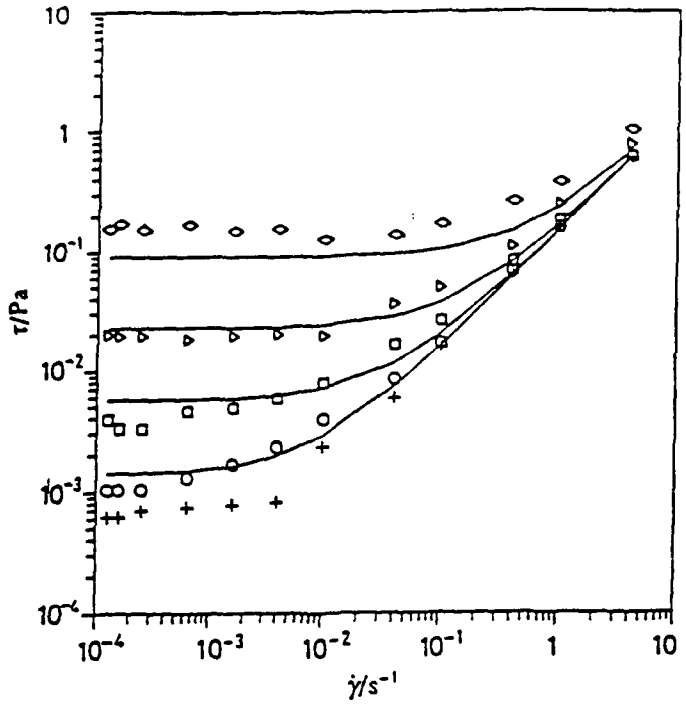

Fig. 2. Shear stress as a function of shear rate. The solid lines are calculated from a Bingham model with a yield stress scaling on E^2. The symbols correspond to E = 0, 50, 100, 200 and 400 kV/mm.

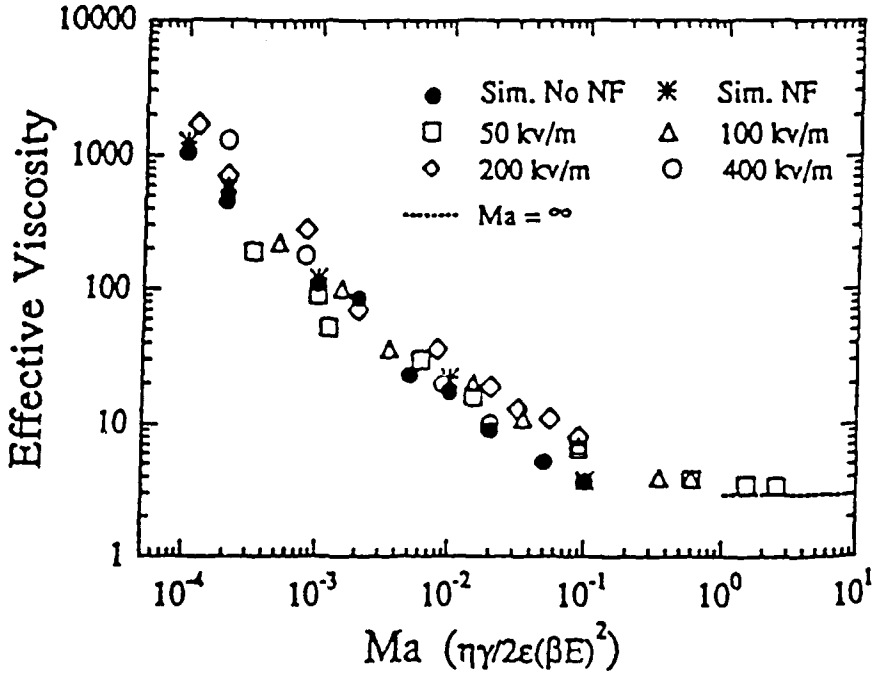

Fig. 3. Comparison of simulation results to the experimental results of Marshall et al. illustrated with the open symbols and the applied field used. The equivalent volume fraction of the monolayer from the "two-thirds" rule is 0.27, and the experimental volume fraction is 0.23.

The absolute magnitude of the predicted response is typically lower than that observed experimentally, but the models give better than order-of-magnitude estimates of the yield stress based on bulk phase permittivities. Confirmation of the models of the yield stress is rendered difficult by extreme sensitivity of the predicted yield stress to the short-range repulsions that keep particles from overlapping. Small changes in surface roughness, amount of surfactant or thicknesses of steric stabilizing layers are predicted to produce large changes in yield stress, indicating that quantitative agreement of predictions with theory will be difficult to achieve. Fig. 4 compares the volume fraction dependence of the yield stress predicted by Klingenberg with experimental results extracted from the literature.

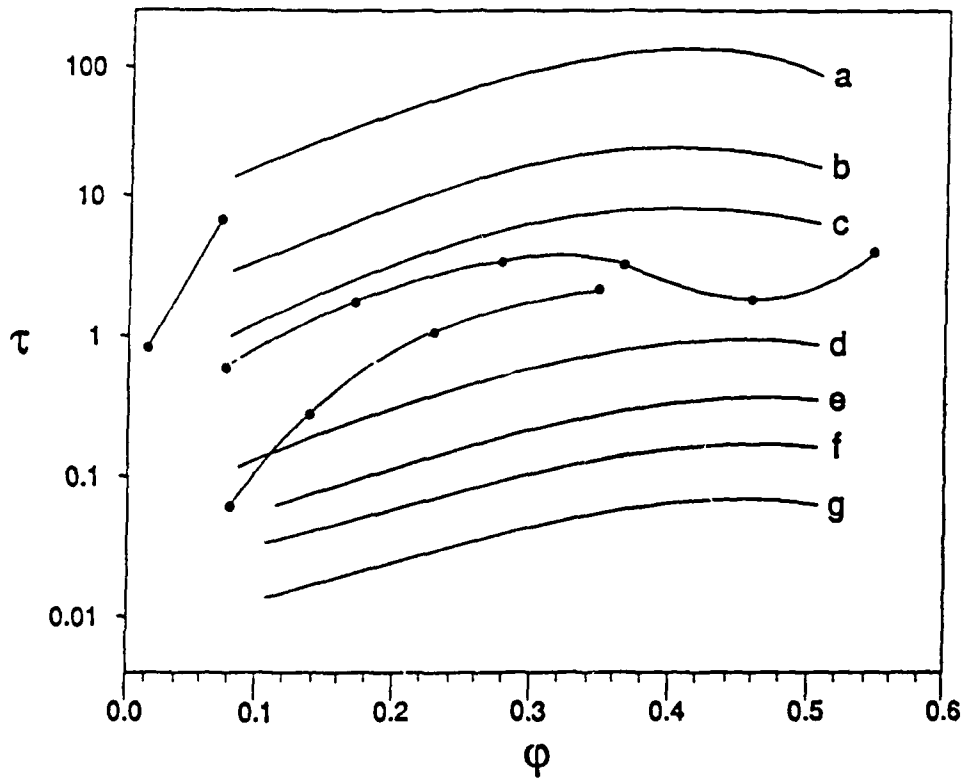

Figure 4. Dimensionless yield stress [$T_0^* = 16\tau_y/(3\pi\epsilon_s\epsilon_p\beta^2E^2)$] as a function of volume fraction. Simulation results of Klingenberg (1991b) are represented as solid lines for conducting particles with minimum surface separations of (a) 10-6σ, (b) 10-4σ, (c) 10-3σ and for dielectric spheres with ϵ_p/ϵ_s of (d) 10.0, (e) 4.0, and (f) 2.0. The point dipole limit is given as line (g). Experimental results ■ correspond to polyaniline in silicone oil, ϵ_p/ϵ_s=36 (Gow 1990); ● hollow silica spheres in corn oil, ϵ_p/ϵ_s = 3.9 (Klingenberg 1991b); and ▲ hydrated polymethacrylate particles in a chlorinated hydrocarbon, ϵ_p/ϵ_s = 3.2 Marshall 1989b).

These simulation models provide estimates of upper bounds for the yield stress to be expected in ER suspensions on the basis of first principles. The maximum response is predicted for conducting spheres with very small limiting surface-to-surface separations. A

realistic upper bound can be estimated by looking at predictions of yield stresses for a suspension of conducting spheres with a distance of closest approach of 10^{-5}s (a 1 nm steric layer thickness on a 100 μm sphere) at a volume fraction of 0.4 in a continuous phase with $\epsilon_s = 2$. The model of Klingenberg predicts that at 1 kV/mm the yield stress will be 1.2 kPa, while at 10 kV/mm the yield stress of the same suspension will be 120 kPa. A doubling of ϵ_s doubles the magnitude of the yield stress.

Due to the idealized microstructures used in their calculations, Bonnecaze and Brady predict yield stresses a factor of 3 to 4 times higher than those of Klingenberg , thus emphasizing the importance of understanding how structures are produced and degraded in ER suspensions. The increases in yield stress predicted by Bonnecaze and Brady are associated with microstructures consisting of chains one particle wide, which are more efficient at transferring stress than are multiple-particle-width chains generated by shearing a suspension in the low $\dot{\gamma}$ limit. The upper bounds on yield stress predicted by these models are larger than any that have been measured. However, very polar particulate phases display yield stresses in this range (*e.g.*, 1 kPa yield stress at 1 kV/mm).

These estimates of upper bounds for the magnitude of the ER response demonstrate the potential of ER fluids for stress transfer applications where large torques must be generated. However, as discussed below, the polarization model based on suspensions consisting of linear dielectrics fails to account for many physical phenomena which act to limit the ER response. The origin of the failure to reach these high yield stresses in ER suspensions at low current densities provides the motivation for many of the research needs given at the end of this discussion.

As discussed above, the polarization model has seen extensive confirmation in qualitative features of suspension structure, percolation times, and scaling behavior of the suspension viscosity. In addition, models and experiments agree well with respect to the existence of a dynamic yield stress, and the dependence of the yield stress on the particle dielectric constant ϵ_p and on the suspension volume fraction ϕ. However, the polarization model fails in a number of areas where understanding of the basic physics is poorly understood. In view of the successes of the polarization model, its extension to new problems and its expansion to include new physical phenomena are crucial to the advancement of ER technology.

III. Failures of the Polarization Model

The polarization model is an essentially linear model for the ER response. The material properties incorporated include only DC permittivities of the constituent phases. As a result, the existence of free charges, alternative polarization mechanisms, and time-dependent phenomena are not accounted for in the simple form of the polarization model described above. A series of phenomena which limit the technological application of ER suspensions and which do not fit easily into the present form of the polarization model are described below.

The most important failure of the polarization model lies in its inability to account for variations in ER response with material properties of the dispersed and continuous phases. The role of particle conductivity as well as polarizability has been brought into focus by the work of Block (1990), and there are numerous accounts (going back to Klass and Martinek (Klass 1967a,b)) demonstrating that dispersed phases consisting of very polar materials do not provide as good a response as do slightly hydrated samples of the same materials or hydrated materials of much lower intrinsic polarizability.

The polarization model argues that the ER response is due to polarization interactions. In one of its most useful forms, the model uses the point dipole approximation (*i.e.*, the solution for the dipole moment set up by a single particle in an electric field). As a result, any polarization mechanism can be placed within this formalism if the far-field dipole moment of the particles can be calculated. Essentially, β in Eq. 1 is replaced by a generalized dipole coefficient which can be calculated from many different mechanisms. For example, Gast and Zukoski (Gast 1989) discuss use of dipole coefficients for spheres coated with a thin layer of different permittivity than the core, and the influence of free ions and particle surface charge on far-field forms of the dipole coefficient. They demonstrate that several possible polarization mechanisms can predominate over the dipole coefficient based only on bulk-phase polarization. A further difficulty in incorporating realistic material properties into predictions of the ER response comes in accounting for the time-dependent polarization properties of (a) the particles, (b) the continuous phase and (c) the double layers at the electrodes. However, few of these concepts have been explored in relation to ER suspensions.

A second major failure of the polarization model lies in its not taking into account the role of free charges in the suspension. Free charges influence the ER response in several ways. Firstly, under DC fields, free charges carry current from one electrode to the other. There have been many observations that a loss or Faradaic current is required if an ER response is to be observed. The most obvious method of demonstrating this phenomenon is to insulate the electrodes with a thin layer of nonconducting paint. Since the insulating paint will not appreciably alter the electric field strength in the suspension if no free charges are present, the polarization model predicts that the ER response should not change from that measured with uninsulated electrodes. Consistently, however, no ER response is seen when the electrodes are insulated. This lack of ER response is due to the free charges which are present in the continuous phase and which carry the current. If the electrodes are insulated, double layers form at each electrode and diminish the electric field away from the electrodes. For typical solution conductivities, sufficient ions are present to completely screen the induced surface charge, so that particles at a distance from the electrodes cannot polarize and therefore no ER response is observed. While this model qualitatively predicts the observed changes in ER response with frequency of the applied field for systems with insulated electrodes, the role of double layers at the electrode interfaces is poorly explored, and quantitative models have yet to be developed (Anderson 1991, Katsikopoulos 1991).

In a similar manner, free ions will move in response to the polarization of particles and, even for uncharged particles, produce double layers that effectively screen the particles' intrinsic

polarizability. Under DC conditions, the long-range dipolar field produced by a particle in an electrolyte solution is independent of the material of which the particle is made. However, if the particles are charged, the double layers that exist at equilibrium can polarize, giving rise to strong particle interactions which depend on particle charge but not on the permittivity of the solid phase (O'Brien 1978, 1982).

The role of free charge carriers in the continuous phase, their influence on ER response, and how these phenomena can be used to engineer useful ER suspensions are not accounted for in current forms of the polarization model. However, these problems lie at the heart of many technological problems, such as the role of water content in power requirements and temperature rise of ER devices. (Increase in water content gives rise to larger conductivities of both particles and continuous phase.)

The polarization model has two characteristic time scales, t_s and $\dot{\gamma}^{-1}$. Structure formation, rheological response and influence of field frequency will all relate to these time scales. While percolation times are found to follow the predictions of the polarization model, rheological response times often do not have the same scaling properties. Many potential ER technologies require response times substantially shorter than those available in currently used technologies. Unfortunately, little is known about how to control response times.

Several factors may explain why the polarization model fails to predict response times. One of the most important is free ion migration, which results in electrode polarization and the buildup of double layers on particle surfaces. A time scale for these events can be estimated from $\kappa_s/(\epsilon_0\epsilon_s)$, where κ_s is the conductivity of the continuous phase. Typical values are 2 to 10 for ϵ_s and 10^{-10} to 10^{-12} mho/m for κ_s. As a result, responses in times of 0.1 to 0.001 s will be complicated by free ion migration phenomena. In addition, the intrinsic relaxation time of the particles and their ability to polarize when exposed to an electric field will play an important role as response times in the sub-millisecond range are sought. The role of particle conductivity in ER response has been highlighted by Block *et al.* (Block 1990), who suggest that, with all other variables equal, the magnitude of the ER response diminishes above a critical particle conductivity. This work is at odds with the results of Gow and Zukoski (Gow 1990), who find a monotonic increase in yield stress with particle conductivity, but is in agreement with later work of Katsikopoulos and Zukoski (Katsipopoulos 1991), who demonstrate that, as particle conductivity is increased, a shorter time is required for the local field to relax to a low value after a step change in voltage has been applied. The reduction of the local field due to conduction along particle chains will decrease the polarization interactions of the particles and thus diminish the ER response. These studies suggest that response times and magnitudes of the ER response are intrinsically linked to both polarization and conduction mechanisms of the continuous and dispersed phases. Little modeling or experimental work has been carried out detailing these processes.

Due to the linear nature of the polarization model, the non-ohmic responses of ER suspensions cannot be modeled. In addition, the failure of E^2 scaling for the yield stress requires a better understanding of polarization mechanisms and the response of non-polar dispersed suspensions to large field strengths.

While the polarization model predicts variations in response with particle and dispersed phase polarizability, the effects of temperature are not specifically incorporated. In particular, the effects of changes in temperature on polarizability and current-carrying capacity have seen little detailed research. Several studies have demonstrated that, as the temperature changes, the ER response follows changes in particle dielectric constant in such a fashion that, when the temperature is adjusted to the point where continuous and dispersed phases have the same permittivity, an ER response is not observed.

Many of the failures of the polarization model described above are the result of the immature nature of model development and of poor understanding of the current-carrying properties of non-polar continuous phases. However, the inability of the simple polarization model to predict the influence of material properties on ER response limits progress in ER fluid development.

IV. Research Areas Receiving Little Attention

In addition to the inability of current forms of the polarization model to describe a variety of phenomena, little research has been carried out on a wide range of phenomena which could well shed light on the mechanisms operating in ER fluids. Several of these topics are described in this section.

The constitutive behavior of ER suspensions over a full range of field strengths, strains and rates of strain has seen limited investigation. Only recently have models and experiments been presented on the viscoelastic behavior of ER fluids (Gamota 1991a, 1991b, McLeish 1991). Investigations of the small-strain elastic properties of ER suspensions will provide insight into the operational structures and forces. In addition, despite obvious importance to many process applications, implications of the anisotropic nature of the structures in ER fluids and the resulting non-isotropic constitutive equations have seen little study.

The dynamic behavior of ER suspensions has also seen limited modeling or experimental investigation. For example, time scales for the approach to steady state after step changes in shear rate and/or field strength are not understood. Recent experiments suggest that once structures are formed, in the low Ma limit, changes in field result in extremely rapid (less than millisecond) times for the stress to increase. However at intermediate shear rates, where the low Ma structures have been partially degraded, step changes in field strength result in a much more sluggish suspension response. In addition, there is growing evidence of a stress overshoot when the field is suddenly turned on at low shear rates, which is not observed if the field is suddenly turned on at higher shear rates. The origins of these dynamic responses are not understood in terms of changes in suspension structure. Another area where ER suspension dynamics remains largely unexplored lies in the dynamics of stress changes in response to step changes in shear rate, as opposed to step changes in field strength.

The influence of the frequency of the applied field and implications for observed changes in stress transfer properties is an area of great significance that has seen little exploration.

Determination of the dielectric properties of constituent phases as a function of frequency and temperature and correlation with changes in stress transfer capability offer opportunities to identify important links required to develop models of the ER response based on material properties, and to develop methods for controlling the power requirements of ER suspensions.

The role of particle shape in the ER response is largely unexplored. Nonisotropic particles offer the potential of achieving greater ER response by producing larger dipole moments at the same volume fraction of particles.

The influence of particle surface charge and the resulting equilibrium double layers, well known in polar continuous phases, has been generally ignored in recent models of ER response. As discussed above, free ions balancing the particle charge will add to the suspension's conductivity, as well as altering polarization interactions in the ER suspension. While dielectric properties of dilute suspensions is an active area of research in aqueous colloid science, extension to pair interactions has been limited, despite many observations of the chaining of particles in aqueous suspensions. The dipole moments generated by double-layer polarization around charged particles are quite large (*i.e.*, many times those of the same particles in the absence of free ions). However, understanding of these effects in suspensions of low polarity is poor.

The polarization model has been largely developed for non-Brownian particles. When $s^3E^2\epsilon_0\epsilon_s\beta^2/kT$ is of order unity, a series of phase transitions is expected, from an amorphous microstructure to one with long-range order. The influence of thermal motion on particle trajectories and suspension microstructures is largely unexplored, except in a series of Brownian simulations. However, as stable suspensions are sought, smaller particles will become important. Indeed, there are suggestions that large liquid-crystalline polymers might provide interesting ER fluids. The interaction of Brownian particles and the expected stress transfer properties of small particles is an area which has seen limited study but may prove useful.

The ability of surface coatings to alter ER response has long been recognized. Indeed, for many impermeable systems, the effects of water are often interpreted in terms of a surface coating which gives rise to enhanced surface polarization. The action of surfactants appears complex in that they can act to stabilize the suspension in the absence of the electric field, but may also result in irreversible agglomeration when the field is applied (Deinega 1984). Models of the ER response suggest that even thin steric layers on particle surfaces will act to diminish the ER response. However, little work has explored the possibility of surfactants adsorbing reversibly, so that they can be squeezed out when two particles are brought into close contact by polarization forces.

V. Research Needs

A prioritized list of research needs is given below for gaining a better understanding of the mechanisms underlying the ER response and of methods to optimize ER fluids.

1. Material Properties

Gaining a better understanding of the material properties which give rise to the ER response is of the greatest importance to advancement of ER technology. Control of stress transfer levels, response times, temperature stability and power requirements depend on understanding parameters controlling each phenomenon and knowing the trade-offs in optimizing one parameter at the expense of others. The research which is needed on the subject of material properties is both theoretical and experimental in nature. However, one of the most pressing research needs is to gather data on well characterized suspensions. Besides data on particle size and continuous phase viscosity, dielectric responses of the particles, the continuous phase, the suspension/electrode assembly and of the suspensions as a whole will be required to fully understand the ER response. Below are given research needs for understanding the properties of each component of the ER suspension.

A. Dispersed Phase

i. Dielectric properties as a function of temperature and frequency.
ii. Studies of polarization mechanisms.
iii. Effects of particle size and shape.
iv. Possibilities of moving to single-phase ER fluids.
v. Influence of thin coatings on particle polarizability.
vi. Materials giving large polarizabilities with low conductivities.

B. Continuous Phase

i. Dielectric properties as a function of temperature and frequency.
ii. Stability over time.
iii. Erosion/corrosion effects at electrodes.

C. Fluid Properties

i. Stress transfer levels as a function of field strength and frequency, volume fraction, and temperature and dielectric properties of suspensions.
ii. Response times (structure formation, relaxation, stress transfer, ...).
iii. Electrochemistry at electrodes and between particles.
iv. Methods of determining local fields in electrode gap.
v. Stability and reproducibility.
vi. Structures formed, their stability, and their ability to transfer stress.
vii. Colloidal stability in nonpolar dispersions.
viii. Influence of surfactants, thixotropes, *etc.* on ER response.

2. Influence of Free Charges

Free charges can enhance the polarizability of the dispersed phase and thus enhance ER response. However, free charges can also act to reduce the local electric field, thus diminishing the ER response. Understanding the origin and role of free charges is also crucial to the control of energy dissipation in ER suspensions. As a result of the lack of research in this important area and its influence on the magnitude of the ER response, the

influence of free ions is placed as the second most important research priority for understanding mechanisms in ER suspensions. Research areas include:

A. Origin of current in ER suspensions.

B. Electrochemistry occurring at electrodes and particles.

C. Coupling of electrochemistry and polarization mechanisms with regard to time-dependent response in ER suspensions. (How fast do free charges screen local electric fields and reduce particle polarization?)

D. Ability of dielectric measurements to determine suspension structures.

3. Response Times

Understanding how to modify response times of ER suspensions is crucial to advancing ER technologies. Understanding response times is complicated by the coupling of time scales for structure formation with those for polarization. As a result, understanding requires careful determination of the rate-controlling steps for the process whose response time is required. Research areas include:

A. Particle polarization times (bulk material and composite particle).

B. Continuous phase response. (How fast do fields decay?)

C. Structure formation and degradation in presence and absence of shear and electric fields.

D. Stress transfer as a function of changes in field strength and shear rate.

E. Role of hydrodynamics in limiting response times.

4. Rheology

The rheological properties of the suspensions in the absence and presence of electric fields makes or breaks ER suspension technologies. The research needs identified above are aimed at understanding the origins of changes in suspension rheology. However, rheological investigation of ER fluids provides useful information about ER suspension mechanisms. Research areas include:

A. Response times for changes in rheology as a function of temperature, field strength and frequency, and rate and magnitude of strain.

B. Non-isotropic constitutive behavior.

C. Intrinsic two-phase nature of common ER suspensions.
   i. Control of settling.
   ii. Use of thixotropes to control settling and zero shear rate behavior in absence of field.
   iii. Structure formation and degradation under shear.

D. Small-strain viscoelastic response.

E. Influence of particles on the viscoelastic response of gels exposed to large electric fields.

5. Suspension Additives

Commercial ER suspensions will have to meet many needs besides their ability to gel in response to changes in electric field. To meet these needs, stabilizers, thixotropes, lubricants, *etc.*, will have to be added to the suspensions. Most models of the ER response predict that the strength of a polarized suspension results from interactions of particles at separations that are very small in comparison to the sizes of the particles. These small distances correspond to layer thicknesses of stabilizers and absorbed materials, and therefore such additives will have important influences on particle interactions. Additives which need further investigation include:

A. Surfactants (ionic, nonionic).

B. Thixotropes (*i.e.*, thickeners)

6. Enhancement of Polarization Mechanisms

Possibilities of enhancing the polarization of particles through relying on mechanisms other than bulk material polarization may provide alternative ER suspensions with better properties. Fruitful research is suggested in the following areas.

A. Piezoelectric particles.

B. Optically active particles.

C. Coated particles.

D. Semiconducting particles.

References

Adriani, P. M. and A. P. Gast, *Phys. Fluids,* 31, 2757 (1988).

Anderson, R. A., Third International Congress on Electrorheology, Carbondale, Ill., (October 1991).

Block, H. and S. P. Kelly, *J. Physics D.* (1989)

Block, H., J. P. Kelly, A. Qin and T. Watson, *Langmuir* 6, 6-14 (1990).

Bonnecaze, V. R. J. and J. F. Brady, *J. Rheol., 1992* (1992a).

Bonnecaze, R. T. and J. F. Brady, *J. Chem. Phys.* Feb. (1992b).

Deinega, Y. F. and G. V. Vinogradov, "Electric Fields in the Rheology of Disperse Systems", *Rheol. Act.*, 23, 636-651 (1984).

Gamota, D. R. and F. E. Filisko, "High Frequency Study of an Aluminosilicate Electrorheological Material", *J. Rheol.* 35, 1411-1425 (1991b).

Gamota, D. R. and F. E. Filisko, "Dynamic Mechanical Studies of Electrorheological Materials: Moderate Frequencies", *J Rheol.* 35, 399-425 (1991a).

Gast, A. P. and C. F. Zukoski, "Electrorheological Fluids as Colloidal Suspensions", *Adv. Coll. Int. Sci.* 30, 153-202 (1989).

Gow, C. J. and C. F. Zukoski, *J. Colloidal Interface Sci.* 136, 175-188 (1990).

Hill, J. C. and T. H. von Steenkiste, *J. Appl. Phys.* 70, 1207 (1991).

Jordan, T. C. and M. T. Shaw, "Electrorheology" IEEE, Electrical Insulation, *CEIDP* 24, 849-878 (1989).

Katsikopoulos, P. and C. F. Zukoski, MRS Symposium Series on Complex Fluids. Fall Meeting Materials Research Society, December 1991 (in press).

Klass, D. L. and R. V. Martinek, "Electroviscous Fluids I. Rheological Properties", *J. Appl. Phys.*, 38, 67-74 (1967a).

Klass, D. L. and T. W. Martinek, "Electroviscous Fluids II. Electrical Properties", *J. Appl. Phys.* 38, 75-80 (1967b).

Klingenberg, D. J., F. von Swol and C. F. Zukoski, "The Small Shear Rate Response of Electrorheological Suspensions I. Point-Dipole Limit.", *J. Chem. Phys.* **94**, 6160-6169 (1991a).

Klingenberg, D. J., F. Von Swol and C. F. Zukoski, "The Small Shear Rate Response of Electrorheological Suspensions II. Extension Beyond the Point-Dipole Limit", *J. Chem. Phys.* **94**, 6170-6178 (1991b).

Klingenberg, D. J., Ph.D. Thesis, Dept. of Chemical Engineering, University of Illinois at Urbana-Champaign (1991c).

Klingenberg, D. J. and C. F. Zukoski, "Studies on the Steady-Shear Behavior of Electrorheological Suspensions", *Langmuir* **6**, 15-24 (1990).

Marshall, L., C. F. Zukoski and J. W. Goodwin, "Effects of Electric Fields on the Rheology of Non-Aqueous Concentrated Suspensions", *J. Chem. Soc. Faraday Trans. I* **85**, 2785-2795 (1989a).

McLeish, T. C. B., T. Jordan and M. T. Shaw, "Viscoelastic Response of Electrorheological Fluids I. Frequency Response", *J. Rheol.* **35**, 427-498 (1991).

O'Brien, R. W. and L. R. White, *J. Chem. Soc. Faraday Trans. II* **74**, 1607 (1978).

O'Brien, R. W., *Adv. Colloidal Interface Sci.* **16**, 218 (1982).

Tao, R. and J. M. Sun, *Phys. Rev. Lett.* **67**, 398 (1991a).

Tao, R. *et al.*, Third International Congress on Electrorheology, Carbondale, IL, October, 1991 (1991b).

Winslow, W., *J. App. Phys.* **20**, 1137 (1949).

5.4 Cooperative Aspects of ER Phenomena

P. L. Taylor

In this section I will review some of the theoretical approaches to the description of equilibrium ER behavior, with particular emphasis on the structure of the fluid and solid phases and on the transition between them. The section contains five subdivisions:

1. Microscopic theories and mean-field theories
2. Structure in an ER solid
3. Column formation and column shape
4. The nature of the ER transition
5. Conclusions

I. Microscopic Theories and Mean-Field Theories

Most of the discussion of the structure of the ER solid in the literature makes use of the principle of energy minimization. In the simplest theories it is simply the expectation value of the Hamiltonian that is minimized; in more sophisticated theories the thermodynamic free energy is considered. Rheological properties are then seen in terms of an approach to equilibrium from a state marginally removed from the free-energy minimum.

The level of organization considered in a theory can vary considerably. At the simplest level one can calculate in terms of an electric polarization that is a function of the continuous position variable r. The next level is to work in terms of the individual suspended particles, and here the simplest variant is to assume that the electric field is identical at the site of each particle. This would be an example of a mean-field theory, in analogy to the Curie-Weiss theory of ferromagnetism. The localized effect of the interaction between near neighbors is approximated by an averaged field.

Beyond these, one moves to theories that take into account the fluctuations caused by a non-uniform distribution of particles. This type of theory is found most often in discussions of the liquid state, but poses a large number of difficulties in implementation.

A common approach is to assume a structure of a certain type, and then calculate its energy as a function of some parameter such as crystal structure, column width, *etc.* Alternative approaches include simulations in which the suspended particles are allowed to move following some algorithm that implicitly contains the appropriate statistical mechanical

principles. Such methods, while having the disadvantage that light is not always shed on the nature of the fundamental processes involved, do have the added benefit that the time scale of the process of phase separation, aggregation, or shear can be included in the results.

In short, the simplest attack on the problem of structure in ER systems is to guess at a probable form, calculate its energy, and hope that no other structure exists of lower energy. A more sophisticated approach is to look critically at any proposed structure, solid-like or liquid-like, and test it for stability under various perturbations. This latter approach appears to be still in its infancy and to require more work.

The question of whether a true phase transition in the thermodynamic sense is observable is still open. One must remember that we are not dealing with the motion of atoms or molecules, but of macroscopic particles, and so many of the customary concepts of thermodynamic theory are only to be considered in a limiting sense. For example, the kinetic energy of translation of an ER particle in equilibrium will on average be only of the order of kT, with k being Boltzmann's constant and T the temperature. That is, the kinetic energy of the entire particle, which may contain 10^{15} atoms, will only be as large as the kinetic energy of a single one of its constituent atoms. The effect of temperature is thus negligible in any direct sense, and entropy can be ignored; the energy and the free energy are indistinguishable.

The indirect effects of temperature change are still, however, present, in that the dielectric constant, for example, may change with temperature, and this may cause the system to change from being a liquid to a solid. It can then be possible to draw a "phase diagram", in which the boundaries between different structures are shown as lines on a plot of temperature and some other variable. In interpreting such a diagram it is important to bear in mind its origin, since certain features commonly found in thermodynamic phase diagrams may not be apparent in phase diagrams formed from phenomenological bases.

II. Structure in an ER Solid

In principle, the first level of calculation for an ER system should lie in the atomic and electronic behavior of the materials composing the solid particles and the fluid. Here the questions to be addressed include the microscopic internal electric fields in the solid, and the influence of the Lorentz and depolarizing factors on the effective polarizability of the solid particles. The relative effects of anisotropy of material properties and departures from sphericity in particle shape may require more understanding than exists at present. The torque on a particle in an electric field varies linearly with the anisotropy of dielectric constant, but quadratically with deviation from sphericity, and a resistance to tumbling motion may be a significant factor in ER devices.

The great majority of theoretical treatments of ER effects, however, commence at the next level of calculation, in which the particles and fluids are treated as classical material objects describable in terms of a few simple macroscopic variables such as dielectric constant and radius. Then the first step in a calculation is the consideration of a single particle of

dielectric constant ϵ_p in a fluid of dielectric constant ϵ_s. Most treatments consider only spherical particles, which greatly simplifies the analysis.

Application of an electric field causes an induced dipole moment in the particle. Simple treatments use the applied field only, while more sophisticated theories deal with the local field E_{loc}, which includes the effects of all other induced dipoles, as well as image charges induced in the electrodes. Care is needed in calculating the energy of interaction between dipoles and induced charges, since questions of double-counting arise if the usual form of the Coulomb interaction is assumed.

One simplifying assumption made in some calculations is to treat the polarized particles as point dipoles. Within this approximation the Coulomb sums can be performed exactly for the case where the particles are arrayed on the sites of a regular crystal lattice, and within the context of an infinite sample of well defined shape. The need to discuss the shape of the system arises from the long-range nature of the Coulomb force. The shape determines the strength of the depolarizing fields that can be considered as due to surface charges.

While it is possible to calculate the energy of a fixed array of point dipoles, and to compare the relative energies of different types of structure, it is not possible to run numerical simulations in this model without some additions to the equations of motion. The reason for this lies in a venerable theorem that states that no classical array of electrostatic charges can ever be stable. Thus an array of dipoles left to its own devices would simply collapse to a minuscule system of closed chains of head-to-tail dipoles reminiscent of the superstring theories of elementary particles. In order to prevent this instability, Tao and co-workers (Tao 1991a) included a hard-sphere repulsion. From their studies they concluded that a body-centered tetragonal lattice was favored. An extension of this work by Friedberg and Yu (Friedberg 1992) included the effects of higher multipoles. While octupole terms tended to bring the energy of the face-centered cubic lattice closer to that of the body-centered tetragonal lattice, the 32-pole terms largely canceled this effect.

One of the most recent calculations of relative structural energy is due to Davis (1992), who avoided the point-dipole catastrophe by treating spheres of fixed radius. The penalty paid for the added complication a finite-sized particle brings was that it was necessary to treat only metallic particles. In other words, the dielectric constant of the particle, ϵ_p, was set at infinity. In this context it was found that no unique structure had the lowest energy. In particular, the face-centered cubic, hexagonal close-packed, and body-centered tetragonal structures were all of equal energy per unit volume, although the surface energies differed slightly.

III. Column Formation and Column Shape

The question of surface energies of an ER solid leads us to a discussion of the next level in the hierarchy of structures, namely the formation of columns of particles. This phenomenon can be understood in terms of mesoscopic considerations (*i.e.*, considerations at a level of structure intermediate between the molecular and the macroscopic) of the force

of attraction between neighboring dipoles, or from general energy considerations relevant to all heterogeneous media.

The mesoscopic theories have mainly involved simulations, and have generally been restricted to models of point dipoles. The most complete recent simulation is that of Bonnecaze and Brady (Bonnecaze 1992), who, although restricting themselves to two-dimensional systems of circular particles, included viscous forces over a wide range of strengths, and treated some of the many-body aspects of the electrostatic forces. They claim a significant advance over the work of Klingenberg *et al.* (Klingenberg 1991), who treated only single-particle effects, thus attributing identical dipole moments to all particles. Their pictorial results show convincing evidence of mechanisms of chain breaking and reforming.

Questions of the structure of the columns that are formed as particles aggregate in real ER systems cannot, of course, be answered by two-dimensional simulations. There is only one close-packed structure in two dimensions, and that is the triangular lattice, which is indeed found by most simulations. The extrapolation of results in two dimensions to three dimensional systems is hindered, not only by this obvious difficulty, but also by the singular nature of the Coulomb potential. Whether the best model two-dimensional system for mimicking phenomena in three dimensions should be one where the Coulomb interaction varies as 1/r, which is the solution of Laplace's equation in three dimensions, or as ln r, which is the solution in two dimensions, is an open question.

The macroscopic study of structure formation involves consideration of the surface energy of an ER solid. Unlike the case of an isotropic liquid, for which the surface tension, or surface energy per unit area, is a single number, the problem of surface energy in a solid is a complex one; the case of a dipolar solid, in which the interactions are of long range, is even more difficult.

When an electric field is applied to an ER fluid, the existing structure then ceases to be that of lowest free energy. If the time interval over which the field is applied is short in comparison with the time characteristic of energy flow in the ER material, then the system formed is analogous to a supercooled liquid.

The process of solidification of a supercooled liquid occurs by dendritic growth (Langer 1980). That is to say, there is an instability at a liquid-solid boundary, and this results in the formation of fingers of solid growing into the liquid. Early theories of dendritic growth considered solids having isotropic surface energy, but more recent treatments (Caroli 1986) have attached great importance to the anisotropy of surface energy in the solid as a condition for solvability of the equations characterizing dendritic growth. The case of solidification of an ER system would appear to be an extension of the dendritic growth problem, but with the anisotropy of surface energy being orders of magnitude larger than for simple solids. No work in the literature has yet fully exploited this relationship in discussion of the kinetics of ER solidification.

The calculation of surface energy is central to the problem of column formation and to the prediction of column radius. Once chaining of the particles begins, the forces acting on a mesoscopic scale will begin to act between adjacent chains. These forces would be absent in a continuous medium and are a result of the dependence of dipole-dipole forces on relative position. These positions adjust themselves to minimize the electrostatic energy and lead to an attractive interchain force. This in turn causes chains to tend to condense into a crystalline structure.

The macroscopic energy of the electric field, however, is increased by the process of column formation. Possible analogies here are with the intermediate state of a type I superconductor (de Gennes 1986), in which the magnetic field is concentrated in non-superconducting regions of the sample, which form an irregular, filiform pattern when viewed from the direction of the applied field, or with a type-II superconductor (Halsey 1990a; Nelson 1991), in which magnetic vortex lines form. The distinction here is between a superconductor which is a perfect diamagnet and in which the surface energy can be either positive (type I) or negative (type II), and the ER system, which is a paraelectric in which the surface energy is always positive.

There is thus a balance struck between the homogenizing effect of the applied field and the positive surface energy required to form narrow columns. The type of crystal structure formed may not be determined solely by the mesoscopic electrostatic forces if the columns are narrow enough that the surface energy per particle is comparable to the bulk energy per particle.

Recent calculations of surface energy include those by Toor and Halsey (Toor 1992), and by Davis (1992), who both find strong anisotropy in the surface energy and a dependence on crystal structure. Toor and Halsey find the energy of the (100) and (110) surfaces to be lowest in the body-centered tetragonal structure. This is a convenience, as the bulk energy is also lowest in this structure, and so no question arises of the type of crystal structure depending on the geometry of the columns. They find a lower surface energy for the (110) surface than for the (100) surface. This will presumably lead to columns having a cross section of octagonal form (a distorted "stop sign") if the surface energies of higher-index planes are appreciably greater, as is commonly the case.

Davis's calculation produced a similar result. Instead of using point dipoles, he applied Toor and Halsey's methods to his model of metallic spheres, and found the body-centered tetragonal structure to have the lowest free energy for columns of any radius. He points out, however, that the dynamics of structure formation may be important in determining whether the most stable structure always forms, or whether a metastable structure could be more accessible from the liquid state.

IV. The Nature of the ER Transition

The details of the transition from a liquid to a solid state in an ER system remain elusive, but some progress on the theory of the transition in equilibrium systems is being made.

Toor (1991) has used a simulation approach to study the transition from liquid to solid as a field is applied, and sees a process in which an initial period of aggregation is followed by a longer and slower process of densification. The simulations were performed in two dimensions, and so are not necessarily characteristic of real ER systems, but are nevertheless suggestive in the sharp distinction between two temporal regimes. The natural question to ask is whether there might similarly be a distinction between two thermodynamic regimes.

This question has been addressed by Tao (1991b), who treats the Fourier transform of the particle density as a set of order parameters. He then identifies three wavenumbers as important to the solidification process, and notes the variation of the order parameters associated with these wavenumbers with electric field. He naturally finds the two components with wavevector perpendicular to the field direction to have similar behavior, but finds a distinctly different variation for the component with parallel wavevector orientation. He then identifies two critical electric fields. At the first critical field the Fourier component of density in the field direction becomes prominent, and this is identified with the formation of chains of particles. At the second, greater, critical field the random arrangement of these chains freezes into the body-centered tetragonal lattice.

A different approach is taken by the Ford group (Xu 1992) who attack the structural problem from the liquid side, following earlier work by Haytor and Pynn (Haytor 1982) and by Adriani and Gast (Adriani 1988). Here the methodology is to calculate the pair distribution function by using a technique known as the "mean spherical approximation".

As discussed previously, the simplest approximation in calculating the structure of ER systems is to assume that the magnitude of the induced dipole on each particle is identical and due only to the average applied electric field. The next level of sophistication includes the polarization due to the local field induced by individual neighboring particles, a term that may be simply evaluated in perfect cubic lattices, but which requires careful treatment in anisotropic systems such as the body-centered tetragonal lattice.

The problem is even more complex in the case of a non-crystalline system having the disorder typical of the liquid state. Here one must expect a statistical distribution of local fields, and thus a statistical distribution of induced dipoles. One way of reducing this complexity is to assume that all particles take on an equal dipole moment, equivalent to that induced in an isolated particle by the average local field. This was the scheme used by the Chicago (Halsey 1990b) and Carbondale (Tao 1991a; Chen 1992) groups. The Ford group goes one step further and retains a statistical distribution of dipole moments.

The goal of these calculations is to find the average strength of the induced dipole moment by a self-consistent calculation. The principal new result from the work of Xu *et al.* is that there is a maximum value of the applied field for which a self-consistent solution is possible. This phenomenon appears to be related to the Lorentz catastrophe of classical ferroelectricity, and suggests that a phase transition must take place prior to this divergence in the differential susceptibility. (We note that the equilibrium structure is determined by a

minimization of the free energy, while the mean spherical approximation is a treatment that equates forces. One must thus expect the absence of a solution to the liquid-state structure to mark the spinodal rather than the binodal point, and represent absolute instability rather than merely metastability. That is to say, a first-order transition from liquid to solid would be marked by a transition between states of finite differential susceptibility.)

V. Conclusions

It is clear that the study of cooperative effects in ER systems is a fast-moving area of investigation in which a great deal of high-quality work is being performed. Questions related to the equilibrium structure of the ER solid are being answered by a variety of techniques, and work on the details of the liquid phase is beginning. We can expect to see rapid advances in the near future as the simulations start to move from two to three dimensions, and more powerful methods are applied to the analytical problems associated with the kinetics of formation of the ER solid.

References

Adriani, P.M. and A. P. Gast, *Phys Fluids* **31**, 2757 (1988).

Bonnecaze, R. T. and J. F. Brady, *J. Chem. Phys.* **96**, 2183 (1992).

Caroli, B. C., Caroli, B. Roulet and J. S. Langer, *Phys. Rev.* **A33**, 442 (1986).

Chen, T., R. N. Zitter and R. Tao, Phys. Rev. Lett. **68**, 2555 (1992).

Davis, L. C., *Phys. Rev.* **A46**, (1992) in press.

de Gennes, P. G., *Superconductivity of Metals and Alloys*, (W. A. Benjamin, New York, 1966).

Friedberg, R. and Y.-K. Yu, preprint (March 1992).

Halsey, T. C. and W. Toor, *J. Stat. Phys.* **61**, 1257 (1990a).

Halsey, T. C. and W. Toor, *Phys. Rev. Lett.* **65**, 2820 (1990b).

Haytor, J. B. and R. Pynn, *Phys. Rev. Lett.* **49**, 1103 (1982).

Klingenberg, D. J., F. van Swol and C. F. Zukoski, *J. Chem. Phys.* **94**, 6160 and 6170 (1991).

Langer, J. C., *Rev. Mod. Phys.* **52**, 1 (1980).

Nelson, D. R., *Physica* **A177**, 220 (1991).

Tao, R. and J. M. Sun, *Phys. Rev. Lett.* 67, 398 (1991a).

Tao, R., talk at conference on ER fluids in Carbondale, Illinois, October 1991(b).

Toor, W. R., preprint, and T.C. Halsey, talk at conference on ER fluids in Carbondale, Illinois, October 1991.

Toor, W. R. and T. C. Halsey, *Phys. Rev.* A45, 8617 (1992).

Xu, B. C., J. M. Ginder, K. C. Hass and L. C. Davis, unpublished draft, 1992.

5.5 Modeling and Simulation of ER Fluids

Andrew M. Kraynik

I. Phenomenological Constitutive Theories

Most applications involve unidirectional shearing flow of an ER fluid confined between two surfaces that are separated by a small gap, across which an electric field is applied. We will focus on situations in which relative motion of the surfaces, be they flat plates or concentric cylinders, drives simple shearing flow of the fluid. Under steady flow conditions, the viscosity function describes the relevant stress transfer. Viscosity data for ER fluids are often fitted to an empirical equation for viscoplastic fluids of the form

$$\sigma = \eta\dot{\gamma} = \sigma_y + \eta_\infty\dot{\gamma} \qquad (for\ \sigma > \sigma_y) \tag{1}$$

whereas $\dot{\gamma} = 0$ for $\sigma < \sigma_y$. Here σ is the shear stress, η is the viscosity function, $\dot{\gamma}$ is the shear rate, σ_y is called the dynamic (or viscometric) yield stress, and η_∞ is the high-shear limiting viscosity, also called the plastic viscosity. The yield stress represents a threshold in stress below which there is no steady flow - or more precisely, the shear rate is either negligibly small or cannot be measured. When the yield stress is interpreted as a strict threshold between flow and no flow, then at stresses below σ_y the material described by Eq. (1) is said to support a finite shear stress under static conditions - like a solid. This is not to say, however, that the material behaves like an elastic solid below σ_y.

Because the yield stress of an ER fluid - as opposed to the plastic viscosity - typically exhibits strong dependence on the electric field E, the yield stress has become the primary measure of electrically induced stress transfer. We represent this dependence by a power-law relation:

$$\sigma_y = \sigma_w (E/E_0)^{(2-\delta)} \tag{2}$$

The parameter δ expresses the deviation from quadratic behavior that is often observed in experiments and is supported by theory. We set the reference electric field E_0 equal to 1 kV/mm so that the "Winslow coefficient" σ_W becomes the yield stress at a value of electric field that is typical of ER applications. The feasibility of ER technology depends on the formulation of ER fluids with large yield stresses. Equation (2) emphasizes that it is meaningless to report yield stresses without reporting the electric field. The convention proposed in Eq. (2) identifies σ_W as a convenient measure of the sensitivity of yield stress to electric field.

Equations (1) and (2), with $\delta = 0$, provide a two-parameter Bingham model for the viscosity of an ER fluid. A constant plastic viscosity η_∞ represents the ER fluid viscosity when E = 0 and the parameter σ_W is a measure of electrically induced stress. Armed with these two coefficients - and the assumption that electrical conductivity (and the corresponding power requirements) can be maintained suitably small — engineers have promoted the extraordinary potential of ER technology. However, the physical properties of existing ER fluids (*e.g.*, sufficiently large σ_W, small η_∞ and low conductivity κ_{eff}) do not support most commercial applications, so that major challenges to the future of ER technology center around materials development.

Following the successful formulation of suitable ER fluids, optimal design and improved performance will benefit from the development of more complete phenomenological constitutive models. The Bingham ER model is valuable for design purposes, even though (or perhaps because) it is highly oversimplified. Equation (1), with the plastic viscosity η_∞ depending on both shear rate and electric field, would be sufficiently general to describe any steady flow data. Rheological measurements and simulations indicate that the plastic viscosity can be strongly shear-thinning, but this is probably not as important as issues surrounding transient behavior associated with changes in the flow rate or the electric field. ER fluids have been reported to possess "essentially instantaneous" response with time scales on the order of 1 ms. This rapid but finite response to changes in the electric field is not reflected in Eq. (1), which is only intended to describe steady flow. Modeling transient behavior which is associated with different shear-rate histories falls into the realm of viscoelasticity. Extending theories of viscoelasticity to address transient electrical phenomena is necessary to describe high-frequency response, and provides many research challenges.

Significant changes in the viscosity of ER fluids have been reported when the shear rate is increased and then decreased repeatedly under constant electric field. If this phenomenon cannot be avoided, it needs to be understood and modeled. Transient response over longer time scales - often referred to as thixotropy, the viscosity decrease with time at constant shear rate (and electric field) - has also been reported. This behavior would require controlled changes in the applied electric field in order to maintain steady stress transfer.

Having discussed very large deformation, steady-flow behavior, we now focus on small but finite deformations 'below' the dynamic yield stress. We note that the dynamic yield stress is the steady-state stress usually determined by performing measurements in a controlled-rate device and then extrapolating to zero shear rate. If the stress-strain curve (for small shear rates, increasing strain, and constant electric field) possesses a distinct maximum, which can be distinguished from the asymptotic plateau value associated with the dynamic yield stress, then the material would exhibit a second kind of yielding phenomenon that corresponds to a static (or initial) yield stress. The static yield stress could be determined by using a controlled-stress rheometer and increasing the stress until steady flow is observed. This emphasizes that "yield stresses" determined from controlled-stress and controlled-rate rheometers may be different. Below the static yield stress, where an ER fluid supports finite shear stress and thus exhibits solid-like response, it is tempting to describe the behavior as that of a viscoelastic solid and to assume that, if the deformation rate is sufficiently small,

the response can be modeled by finite elasticity. However, one should not overlook the possibility that significant hysteresis may be exhibited, even at very small deformation rates. It may be appropriate to model this as strain-hardening elastic-plastic behavior. The elastic limit, which is associated with a third type of yield phenomenon, could be much smaller than the static or dynamic yield stresses - so small in fact that it is inappropriate to think about a significant elastic region. One can minimize confusion and ambiguity by recognizing that the term "yield stress" is used to describe several related but very different yield phenomena exhibited by ER fluids (Kraynik 1990).

The phenomenological constitutive theories referred to above assume that an ER fluid can be modeled effectively as a homogeneous, "single-phase" fluid. All of the behavior considered can be called viscoelastic-plastic. Our discussion on theory and simulation will focus entirely on ER fluids composed of particles suspended in a Newtonian liquid. Under an applied electric field, the particles form into chains that are aligned with the electric field. These particulate structures lead to the yield phenomena exhibited by ER fluids under simple shearing deformations. In contrast, consider Poiseuille flow where a pressure gradient drives fluid motion parallel to stationary bounding surfaces. The pressure gradient could be so small that the continuous fluid phase of the ER fluid flows through a porous medium formed by stationary but deformed chains. There would be no finite threshold in pressure gradient below which the flow would stop, so there would be no "yield stress". Obviously, because each phase of the ER fluid moves with different velocity, this flow through a deformable porous medium cannot be described by using a single-phase fluid model. Other approaches such as those based on a continuum mixture theory might be appropriate for modeling this situation and related filtration phenomena.

We conclude this section by noting that particulate suspensions are prone to concentration inhomogeneities near walls, which cannot be penetrated by particles. This can give rise to boundary flows that are appropriate to model with a 'slip velocity' at the continuum level. All interpretation of rheological data for ER fluids assumes no slip, but one cannot overlook the possibility that this condition is violated, especially when the applied deformation rate is small or when static properties are being measured. For these reasons, a complete rheological description of ER fluids may also require constitutive relations for the wall boundary condition beyond the usual no-slip condition.

II. Computer Simulations

Many striking qualitative features of the microscopic phenomena associated with ER suspensions have been reproduced through computer simulation. These numerical studies center around determining the time-evolved motion of individual particles under the action of hydrodynamic forces and electrically induced polarization forces. Unless stated otherwise, we will consider a model suspension consisting of hard, neutrally buoyant, monodisperse spheres immersed in a Newtonian fluid. Brownian forces due to thermal fluctuations can usually be neglected because typical particle diameters are greater than 1 μm. The local fluid motion for this model system is governed by Stokes' equations because the particle Reynolds number is small. The induced interparticle forces stem from a mismatch between

the dielectric constant of the uncharged particles ϵ_p and the smaller dielectric constant of the fluid ϵ_s. The particle dipole coefficient β is defined by $\beta = (\epsilon_r-1)/(\epsilon_r+2)$, where $\epsilon_r = \epsilon_p/\epsilon_s$ is the dielectric constant ratio. The interparticle forces can be determined from the potential field, which is obtained by solving Laplace's equation in both phases.

The governing equations are linear for this model system, so that the local electric field depends only on the macroscopic electric field; the same is true for the local fluid velocity and the imposed deformation rate. Because the local fields are uncoupled, the two problems can be solved independently. This allows one to take advantage of the huge body of literature surrounding the classical fields of electrostatics and low Reynolds number hydrodynamics. However, solving Laplace's equation and Stokes' equations for an arbitrary suspension structure containing a large number of distinct particles is an enormous computational task. Fortunately, one is most interested in macroscopic transport quantities such as the stress or the dielectric constant of the suspension, and these can be related rigorously to microscopic quantities associated with the particles (as opposed to each point in the suspension), such as hydrodynamic stresslets and electrostatic dipoles. In general, the task reduces to computing the appropriate particle-level quantities accurately and efficiently, which requires accounting for far-field and near-field particle interactions as well as convergence difficulties associated with the long-range hydrodynamic and electrostatic interactions typical of these systems (Brady 1992a). Given the location of each particle, the time evolution of the suspension structure is obtained by integrating the instantaneous particle velocities.

The simplest meaningful approach to simulating ER suspensions is based on solutions to Laplace's and Stokes' equations for isolated spherical particles of radius a (Gast 1989; Klingenberg 1990a, 1989; See 1991). An uncharged particle in a uniform electric field E acquires an induced dipole of magnitude $a^3\beta\epsilon_s E$ aligned with the field. The induced electrostatic force $\mathbf{F_E}$ acting between two particles whose centers are connected by the vector r with length r (which has been scaled by a but is not necessarily large compared to unity) is given by

$$F_E = \frac{F_E}{r^4}[(2f_\parallel\cos^2\theta - f_\perp\sin^2\theta)e_r + f_\Gamma\sin 2\theta\ e_\theta] \tag{3}$$

where the force scale $F_E = 12\pi\epsilon_s(a\beta E)^2$, θ is the angle between E and r, and $\mathbf{e}_r$ and $\mathbf{e}_\theta$ are unit vectors parallel and perpendicular to r. The dimensionless functions $f_\parallel$, $f_\perp$, and f_Γ are equal to unity in the point-dipole limit, where $r \gg 1$ or the dielectric contrast is very small, *i.e.*, $\epsilon_r \rightarrow 1$. According to Eq. (3), the interparticle force is attractive or repulsive when the particles are aligned parallel or perpendicular to E, respectively. The magnitude of the hydrodynamic force on an isolated particle moving with relative velocity U in an otherwise quiescent fluid is given by Stokes' law

$$F_H = 6\pi\eta_s aU \tag{4}$$

where η_s is the solvent viscosity. If we take the velocity scale to be the time τ required for a particle to move one radius ($U = a/\tau$) when two particles are aligned with the electric field, then

$$\tau = \frac{\eta_s}{e_s(\beta E)^2} \tag{5}$$

Note that this characteristic aggregation time does not depend on particle size.

The formation of chain-like particulate structures when an external electric field is imposed on a suspension of randomly dispersed particles has been simulated (Klingenberg 1990a, 1989; See 1991). The particle motion is driven by point-dipole forces and resisted by Stokes drag. One typically invokes a short-range repulsive force to prevent particle overlap; this force stems from hard-sphere interactions or other unspecified colloidal phenomena. Computation time is reduced by performing "two-dimensional" simulations in which the centers of spherical particles are restricted to a plane. When simulating unbounded systems that are not influenced by walls, the suspension structure is assumed to be spatially periodic with rectangular unit cells that contain N distinct particles. The influence of boundaries has been studied by including both walls in a rectangular unit cell that is replicated down the channel. The kinetics of aggregation has been quantified by following the growth of the average particulate cluster size. Development of large electrically induced stresses in ER suspensions clearly depends on the formation of percolating chains, and is undoubtedly influenced by certain details of chain structure such as thickness.

Identifying conditions that lead to the formation of connected chain-like structures that span the gap between electrodes has received relatively little attention. It would also be useful to quantify the chain structure that develops in both the 2-D and 3-D problems and to understand the role of dimensionality. Because the structure evolution studies being discussed do not involve macroscopic deformation of the ER suspension, it is natural to overlook the stress state. However, the anisotropic nature of the polarization forces, which manifests itself as anisotropic suspension structure, also gives rise to an anisotropic stress state (Kraynik 1991). Tensile stresses parallel to the chain axis are due to the large attractive forces between close particles aligned with the electric field. It may be useful to understand the connection between the simultaneous development of suspension structure and tensile stresses when an electric field is applied. These phenomena may give important insight into the shear stresses that accompany the deformation and flow of ER suspensions.

Before discussing obvious limitations to treating electrostatic forces by the point-dipole approximation and treating hydrodynamic forces by Stokes drag alone, certain merits of this approach should be emphasized. First, the simple analytic expressions for the forces given in Eqs. (3) and (4) translate into relatively few equations to solve for each particle in the unit cell. This permits simulations involving several hundred particles to evolve for thousands of time steps without overwhelming computational burden. Because ER fluids are composed of large numbers of chains, each containing large numbers of individual particles, it is very satisfying if not crucial to perform simulations with large numbers N of

particles. Defining "large enough" is not only important, but also depends on what information is being sought. These simulations - like all simulations of ER phenomena - can play an important role in developing and testing theories of ER behavior by providing data based on well controlled numerical experiments. To emphasize this point, a recent theory for aggregation kinetics shows favorable agreement with 3-D experiments and 2-D simulations (See 1991).

The fundamental role of electrically induced interparticle forces in ER phenomena - especially when particles are in close proximity - can be appreciated even more by calculating the interparticle force in Eq. (3) when (r/a-2) is small and ϵ_r is large (Gast 1989; Klingenberg 1990). Then f_l and the others depend on both r/a and ϵ_r. In particular, when the spheres touch, f_l increases with ϵ and becomes unbounded as $\epsilon_r \rightarrow \infty$. This indicates that near-field electrostatic interactions significantly enhance the interparticle force and the corresponding induced stress - the point-dipole approximation clearly neglects important near-field interactions when the particles are close. Unfortunately, arbitrarily large forces cannot be achieved in practical ER systems for several reasons; *e.g.*, particles are separated by small but finite distances owing to various stabilization mechanisms, and large local electric fields in the gaps between particles can result in dielectric breakdown and large electrical conductivities. We note that, in general, the electrostatic force between two particles is influenced by the presence of all other particles, and therefore near-field and many-body interactions are coupled (Bonnecaze 1991a, 1992b). Nevertheless, one can estimate the role of finite ϵ_r by representing the interparticle forces by the two-sphere solution in Eq. (3). This *ad hoc* approach captures important qualitative trends that are consistent with more rigorous methods that are also more computationally intensive (Klingenberg 1991b).

Stokes' law breaks down when particles are separated by distances on the order of one radius, and it underestimates the hydrodynamic resistance of clusters of particles. Because the time scales for structure and induced stresses to develop in ER fluids are important performance parameters, it is necessary to fully understand the role of near-field hydrodynamic and electrostatic interactions in these processes (Bonnecaze 1991).

To motivate our discussion of the viscosity problem, consider simple shearing flow of the model suspension. With the velocity scale $U = a\dot{\gamma}$, the relative magnitude of hydrodynamic and electrostatic forces is expressed by the Mason number Ma which is defined by

$$Ma = \frac{\eta_s \dot{\gamma}}{2\epsilon_s (\beta E)^2} \tag{6}$$

When there is no electric field, which corresponds to $Ma \rightarrow \infty$, the suspension exhibits a Newtonian viscosity which depends strongly on the volume fraction ϕ of particles. A simulation method called Stokesian dynamics successfully predicts this dependence, which has occupied the suspension rheology community for several decades since Einstein derived his famous equation.

Stokesian dynamics is a molecular dynamics-like simulation method that can be used to study the microrheological behavior of suspensions in which particles interact through hydrodynamic and nonhydrodynamic forces (Brady 1992, 1988). The method accurately treats the dominant near-field and many-body hydrodynamic interactions that are associated with Stokes flow. The nonhydrodynamic forces may be any combination of Brownian, colloidal, external, or interparticle forces. In particular, the many-body electrostatics problem that describes the induced interparticle forces in our model ER suspension has been incorporated into the rigorous theoretical framework of Stokesian dynamics (Brady 1992; Bonnecaze 1991a, 1992b). We note that laboratory measurements of viscosity for concentrated suspensions of hard Brownian spheres are in excellent qualitative and quantitative agreement with Stokesian dynamics simulations. Furthermore, predictions of viscosity based on 3-D simulations are in excellent agreement with 2-D simulations where the particles are confined to a monolayer.

The situation (without Brownian motion) corresponds to the infinite Ma behavior of our model ER suspension when E = 0; it also corresponds to the high shear rate limit of the plastic viscosity η_∞ in the viscoplastic fluid model. When Ma is O(1), hydrodynamic and electrostatic effects are comparable. The particles aggregate into soft, weak clusters that are continuously pulled apart and reform. The suspension viscosity is shear-thinning in this regime. Quantitative predictions of the rheology when Ma is O(1) or larger are beyond the scope of oversimplified hydrodynamics.

The strong ER effect corresponds to Ma $\ll$ 1, where electrostatic interactions between particles dominate hydrodynamic effects. The particles form into stiff, strong chain-like structures that stretch and rotate with the flow, and then break and reform very rapidly. The strongly shear-thinning suspension viscosity goes as $\dot{\gamma}^{-1}$, which indicates that the shear stress is given by the dynamic yield stress. The magnitude of this quantity - the most important quantity in electrorheology - is given by

$$\sigma_y \sim \epsilon_s(\beta E)^2 W(\epsilon_r,\phi) \tag{7}$$

Under the point-dipole assumption, dynamic yield stresses are underpredicted by orders of magnitude when ϵ_r is large. By accounting for near-field and many-body electrostatic interactions, the correct order of magnitude is predicted; thus the dimensionless yield stress W is a strong function of ϵ_r and saturates as ϕ increases (Klingenberg 1991a,b).

The small Ma regime corresponds to elastic-plastic behavior. In this regime, quasistatic deformation of chain-like particulate structures determines the rheological behavior (Bonnecaze 1992). Because the role of hydrodynamics is less important, simulations that only use Stokes law are quite successful (Klingenberg 1991a,b).

Building on the connection between the dynamic yield stress and elastic-plastic behavior, one can hope to develop theories for the yield stress by analyzing the large deformation elastic response of particulate chains (Kraynik 1991; Bonnecaze 1992c; Klingenberg 1990b). In the simplest approach, undeformed thin chains composed of single strands of "touching" particles

are aligned with the electric field. The stress-strain behavior calculated for large simple shearing deformations of this chain structure determines a shear modulus and a maximum value for the shear stress, which is presumably related to the yield stress. Performing these calculations for various chain structures provides useful upper bounds on the yield stress. To further illustrate the complex rheological behavior of ER fluids, the stress tensor is asymmetric. This asymmetry stems from the external couple acting on the strained chains, which behave like a single dipole wanting to align with the electric field. The stress-strain response depends on chain thickness and other features of chain structure. This emphasizes the importance of understanding the evolution of chain structure toward the so-called ground state when the electric field is applied. It would also be useful to understand the influence of deformation and flow on chain structure to explore possible mechanisms for hysteresis, distinct static yield stresses, and thixotropic behavior exhibited by ER fluids.

To gather meaningful statistics on chain structure, simulations must be performed with large N, otherwise there are few unique chains. In a similar vein, when an unbounded suspension is being simulated with small N, there are few unique particles in each chain; when a chain breaks, it does so simultaneously and repeatedly along its length because the structure is spatially periodic. This multiple breaking is unaesthetic because it has not been observed experimentally, but further study is needed to determine if phenomena like this, which are associated with a spatially periodic problem formulation, affect quantitative macroscopic predictions. It is difficult to have large N with more rigorous and computationally intensive methods like Stokesian dynamics. This emphasizes the importance of performing simulations in both two and three dimensions, and developing connections between the two. Obviously, one can always find a use for faster computers. Massively parallel architectures could lead to major breakthroughs which would enable significantly larger problems to be solved.

Simulations that include entire chains and both walls are very appealing because several important phenomena can be studied. Whether one is interpreting data or developing a phenomenological theory for rheological behavior, this is usually done within the context of a continuum theory, where the fluid is considered to be homogeneous, and the no-slip boundary condition is invoked. All of these assumptions are open to question for ER suspensions. We already mentioned the possibility of wall slip because of the particulate nature of ER fluids. Simulations that include walls usually adopt the *ad hoc* assumption that the relative velocity of particles vanishes when the distance from the surface is small (Klingenberg 1989, 1991a). Theory and simulations of hydrodynamic and electrostatic interactions in the wall region would shed light on the micromechanics of the wall boundary condition. When ER fluids containing particles much larger than 10 μm are confined in gaps smaller than 1 mm, relatively few particles are needed to span the gap, creating the possibility of scale effects leading to non-continuum behavior. If chains only break in one place, then structures with lengths about half the gap would exist, providing another mechanism for gap-dependent rheology. Situations where these and other non-continuum effects might be expected could be studied through simulation.

Pressure-driven flow of an ER suspension is relevant to ER valve applications. It would be useful to study the time response of an ER valve by considering the following problem. For

time $t < 0$, the model suspension undergoes steady Poiseuille flow with no electric field (Brady 1992a). At $t = 0$ an electric field is imposed with no change in the pressure gradient. Of interest are the electric field required to form static chain structures that fill the gap, the time required for these structures to develop, and the leakage. Remember that flow does not stop, because the fluid phase flows through the porous medium formed by stationary but deformed chains. It would be very interesting to see how well the yield stress predicted for simple shear predicts the conditions required to 'shut the valve'. This simulation is challenging because it is a controlled-stress situation as opposed to controlled deformation rate.

Because it is impossible to maintain neutrally buoyant particles over an arbitrary temperature range, sedimentation can never be eliminated entirely. Reducing particle size also reduces the sedimentation rate. The Brownian motion experienced by submicron particles slows sedimentation even more; however, strong Brownian effects could disrupt the chain structure responsible for large electrically induced stresses. This suggests an optimum particle size to balance ER response and sedimentation performance. Brownian forces have been included in Stokesian dynamics simulations of the model ER suspension in shearing flow (Brady 1992b). The predicted viscosity is strongly shear thinning at the smallest Mason numbers achieved; however, in contrast with the non-Brownian case, the power-law exponent for the dependence of viscosity on shear rate is greater than -1. If this behavior persists to zero shear rate, then there is no dynamic yield stress. Fundamental questions surrounding the conditions under which yield behavior is expected in ER fluids can be addressed through theory and simulation (Bailey 1989; Evans 1991).

The absence of particle size in both the Mason number and the characteristic stress in Eq. (7) can not be interpreted to mean that polydispersity has no influence on the magnitude of the ER response. No studies of polydispersity have appeared. Also absent are investigations of particle shape. The theoretical framework exists for including these effects in simulations; however the implementation would be tedious and computationally demanding.

Dynamic mechanical tests, which involve small but finite sinusoidal shearing deformations, have proven extremely useful for characterizing the viscoelastic behavior of polymers and other highly structured materials. Theory and simulations could play an important role in developing a microrheological basis for interpreting dynamic mechanical measurements, which can also be used to study yield phenomena (Gamota 1991; McLeish 1991).

We have only discussed simulations of the rheological behavior of ER fluids, which provide two important performance parameters, the zero-field viscosity and the yield stress, which correspond to infinite Ma and small Ma, respectively. Measurements of the complex dielectric constant of ER fluids under deformation is envisioned to be another useful probe of structure in ER suspensions. The theoretical basis for interpreting these measurements will also need to be developed through theory and simulation (Bonnecaze 1991a).

Electrical conductivity is not an issue for model ER suspensions composed of nonconducting dielectric phases; however, real materials exhibit finite electrical conductivities. For this reason, interpretation of rheological measurements at dc or low-frequency ac electric fields is obscured by conductivity effects (Anderson 1991; Davis 1992). Under the assumption of a leaky dielectric or Maxwell-Wagner model, polarization forces in high-frequency fields are determined by the capacitive part of the complex permittivity; the dielectric 'constants' discussed above are replaced by the corresponding permittivities of each phase. At low frequencies, the dielectric constants in the particle dipole coefficient are replaced by electrical conductivities (ϵ_s and ϵ_p are replaced by κ_s and κ_p, respectively), so that the induced electrical stress scales as

$$\sigma \sim \left(\frac{\kappa_r - 1}{\kappa_r + 2}\right)^2 \epsilon_s E^2 \tag{8}$$

At low frequency, the induced stress increases with the conductivity ratio $\kappa_r = \kappa_p/\kappa_s$. The electrical conductivity κ_{eff} of the ER fluid exceeds that of fluid phase when $\kappa_r > 1$, and is larger for percolating chains than randomly dispersed particles. The effective conductivity is, of course, determined by solving the many-body electrostatics problem discussed above. This discussion does not carry over to situations where ionic effects are important.

It should be clear that the feasibility and development of ER technology will benefit from continuing investigation of microstructural interactions between the particles and fluid in an electric field and their connection to the microscopic behavior of ER suspensions.

References

Anderson R. A., to appear in *Proceedings of the International Conference on ER Fluids*, ed. R. Tao, Southern Illinois University, Carbondale, IL, October 15-16, 1991.

Bailey, P., D. G. Gillies, D. M. Heyes and L. H. Sutcliffe, *Molecular Simulation* **4**, 137 (1989).

Bonnecaze, R. T., Ph.D. Thesis, Dept. Chem. Eng., California Institute of Technology, Pasadena (1991a).

Bonnecaze R. T., and J. F. Brady, *J. Chem. Phys.* 96 , 2183 (1992b).

Bonnecaze R. T. and J. F. Brady, J. *Rheology* **36**, 1 (1992c).

Brady and J. F. and G. Bossis, *Ann. Rev. Fluid Mech.* **20**, 111 (1988).

Brady, J. F., to appear in "Dispersed Two-Phase Flow", ed. M. Roco, Butterworths (1992a).

Brady, J. F., private communication (1992b).

Davis, L. C., *J. Appl. Physics* (submitted 1992).

Evans M. W. and D. M. Heyes, *J. Phys. Chem.* **95**, 5287 (1991).

Gast, A. P. and C. F. Zukoski, *Advances in Colloid Interface Sci.* **30**, 153 (1989).

Gamota D. R. and F. E. Filisko, *J. Rheology* 35, 399 (1991).

Klingenberg, D. J., F. van Swol and C. F. Zukoski, *J. Chem. Phys.* **91**, 7888 (1989).

Klingenberg, D. J., Ph.D. Thesis, Dept. Chem. Eng., University of Illinois, Urbana (1990a).

Klingenberg D. J. and C. F. Zukoski, *Langmuir* **6**, 15 (1990b).

Klingenberg, D. J., F. van Swol and C. F. Zukoski, *J. Chem. Phys.* **94**, 6160 (1991a).

Klingenberg, D. J., F. van Swol and C. F. Zukoski, *J. Chem. Phys.* **94**, 6170 (1991b).

Kraynik, A. M., in *Proceedings of the Second International Conference on ER Fluids*, ed. J. D. Carlson, A. F. Sprecher and H. Conrad, Technomic, Lancaster, PA, 445 (1990).

Kraynik, A. M., R. T. Bonnecaze and J. F. Brady, to appear in *Proceedings of the International Conference on ER Fluids,* ed. R. Tao, Southern Illinois University, Carbondale, IL, October 15-16, 1991.

McLeish T. C. B., T. Jordan and M. T. Shaw, *J. Rheology* 35, 427 (1991).

See H. and M. Doi, *J. Phys. Soc. Japan* **60**, 2778 (1991).

5.6 Rheological Characterization of ER Fluids

James W. Goodwin

I. Introduction

Many of the characterization methods reported for ER fluids are closely related to the perceived end-use, and were not primarily designed to elucidate mechanistic features. Hence yield measurements have received a lot of attention, along with continuous-shear viscometry. The equipment used for these measurements has usually been constructed specifically for use with ER fluids, and has often suffered from a lack of precision. Unfortunately the designs may also have produced poorly defined fields, as the equipment has often been designed mainly to illustrate the effect, and then to rank-order a range of materials. Although of some immediate practical use, such test protocols do not lend themselves to providing data that can be used for predicting the effect in other test situations, nor as an aid to detailed mechanistic studies.

It is important that fluids be tested using a wide range of rheological techniques; otherwise we may be led to assume a simpler response than that which actually occurs. Although a simple model may be useful for some purposes, it can readily result in poor prediction of end-use performance.

The shear stress σ is the most measured parameter; although normal stresses may be important in some applications, they are rarely measured. The shear strain is given the symbol γ, while the rate of strain or shear rate is $\dot{\gamma}$. The material behavior ranges from simple fluid through viscoelastic to solid.

II. Viscosity Measurements

1. Rotational Instrumentation

a. Choice of Platens

The measuring elements used with this type of instrumentation consist of (i) cone-plate, (ii) parallel plates or (iii) concentric cylinders. These are sketched in Fig. 1. Both cone-plate and concentric cylinder geometries give a nearly constant shear rate for a given angular velocity, *i.e.*, the shear rate is well defined and constant. The parallel plate has a shear field which is not at all uniform, since the shear rate increases linearly with the distance from the axis. Although the cone-plate geometry is very popular for general rheological measurements, it should be avoided for ER studies because of the marked nonuniformity of electric field, especially its concentration around the apex of the cone. The applied electrical field is well defined in the parallel plate and concentric cylinder designs. Hence the strongly

preferred rotational geometry for ER fluids is concentric cylinders, with parallel plates being a second choice.

Both elements should be insulated from the rest of the instrument, although some workers have used the instrument as the ground connection to permit reversal of DC fields, which is usually required to minimize electrophoretic migration of particles to one surface. It also allows AC fields to be applied safely. The rotational element requires a running contact, which may consist of a copper/beryllium spring contact or a contact via a conducting fluid. Concentrated sodium chloride and mercury have been used for this purpose.

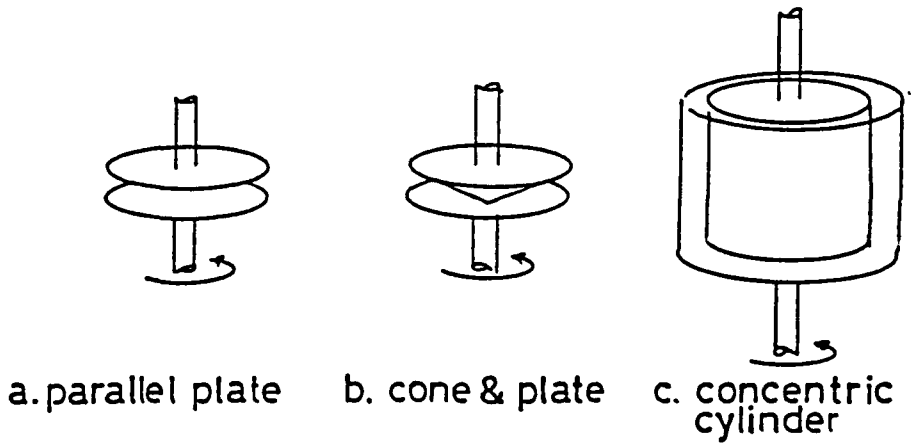

Figure 1. Measurement geometries for rotational viscometry.

b. Modes of Operation

Two modes of operation are available. A *controlled strain* instrument rotates one element - the outer cylinder being preferred for flow stability - and the stress is calculated from the torque on the other cylinder, which is in turn derived from the deflection of a calibrated spring. A *controlled stress* instrument uses a drag-cup motor to apply a torque on one element, which is universally the inner cylinder, and the motion of that element is monitored.

c. Responses

Both of the above types of instrument give a stress *vs.* strain rate curve for the material. The viscosity η is given by

$$\eta = \frac{\sigma}{\dot{\gamma}} \tag{1}$$

The viscosity is constant for a Newtonian material, but decreases rapidly for both plastic and pseudoplastic materials. Figure 2 illustrates typical curves for these material types. When

an electric field is applied to an ER fluid, its rheological behavior changes from fluid to that of a material with solid-like properties, due to strong interactions between the particles. The initial fluid may well be pseudoplastic (and show viscoelasticity), and is unlikely to be Newtonian. With the electric field applied, yield behavior is often reported, in which the deformations are recoverable (elastic) until the yield stress σ_y is exceeded, after which plastic flow is observed. At stresses less than σ_y, the stress is proportional to the strain, and the shear modulus G is given by

$$G = \frac{\sigma}{\gamma} \tag{2}$$

The use of ER fluids in the areas of robotics, high speed actuators and valves has meant that tube-flow geometries are often extremely important. In this type of application, the pressure drop across the device (*e.g.*, a valve) and the flow rate have to be monitored. The static yield stress σ_y is again of great interest, and is often simply defined as the pressure drop per unit area of the valve throat at the point where flow is induced. However the measurements are frequently poorly defined, since they are made on end-use devices rather than on instruments intended for rheological characterization. A parallel slot device, with length and width greater than the gap, allows both electrical and flow fields to be well defined. In addition to the static yield stress, the viscosity can be calculated from the steady flow through such a slot, although entry and exit regions should be carefully profiled to ensure well developed Poiseuille flow. The profiled sections should be of non-conducting material, to avoid a poorly defined electrical field in this region. An annular slot device would have an advantage in uniformity of the field if the radius is much greater than the gap. Again, careful entry and exit profiling would be required.

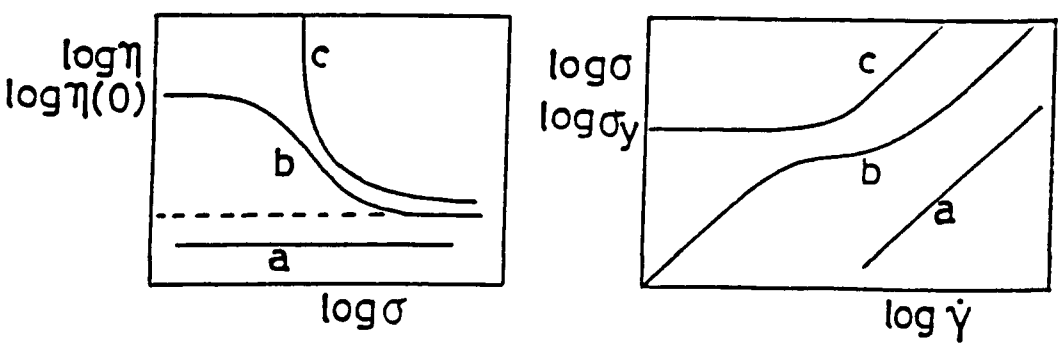

Figure 2. Typical rheograms: (a) Newtonian fluid; (b) pseudoplastic fluid; (c) plastic solid. η_0 is the low-shear limiting viscosity and η_∞ is the high-shear limiting viscosity, also called the plastic viscosity.

At sufficiently low strains, linear or Hookean behavior is observed, but non-linear responses occur at strains greater than *ca.* 10^{-3}. Figure 3 sketches rheograms that are typical of a plastic material. Much of the effort has been centered on measurement of the static yield stress and the viscosity *vs.* shear rate dependence.

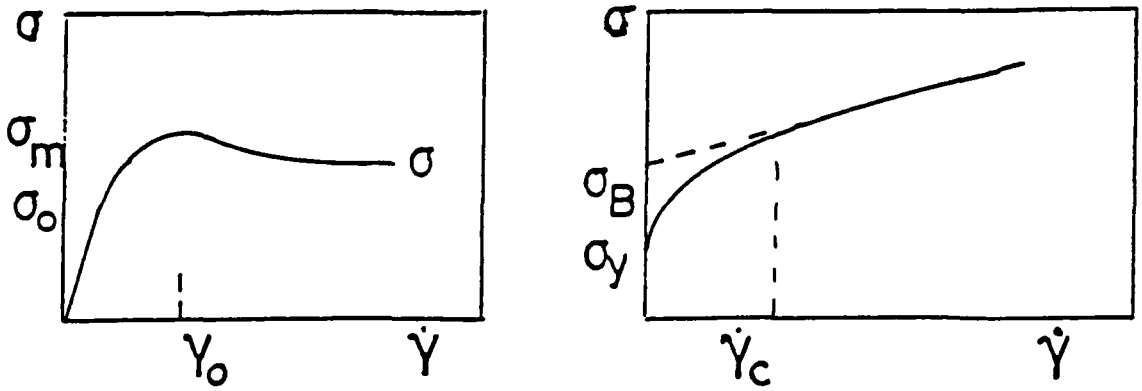

Figure 3. Rheograms for a plastic material. For $\gamma < \gamma_0$ the strain is recoverable; for $\sigma < \sigma_0$ the response is Hookean elastic; for $\sigma_0 < \sigma < \sigma_y$ it is nonlinearly elastic; for $\sigma > \sigma_y$ and $\gamma > \gamma_0$ plastic flow occurs. For $\gamma > \gamma_c$ the slope is the plastic viscosity η_∞. Here σ_y is the static yield stress and σ_B is the Bingham or dynamic yield stress.

III. Rheometry

1. Controlled Stress Measurement

Controlled stress instruments are often favored for the study of yield phenomena as the applied stress can be readily increased and the recoverability of the strain monitored. The problems usually lie in the long-time stability of the instrumentation to electronic drift of the position sensor in the measuring element.

a. Creep Compliance

The strain is monitored as a function of time for a constant applied stress. The creep compliance is then defined as

$$J(t) = \frac{\gamma(t)}{\sigma} \tag{3}$$

After a set time, the stress is returned to zero and the recovery monitored. Typical material responses are sketched in Fig. 4. Here a constant stress has been applied for a time t_0, and at this point the applied stress is removed.

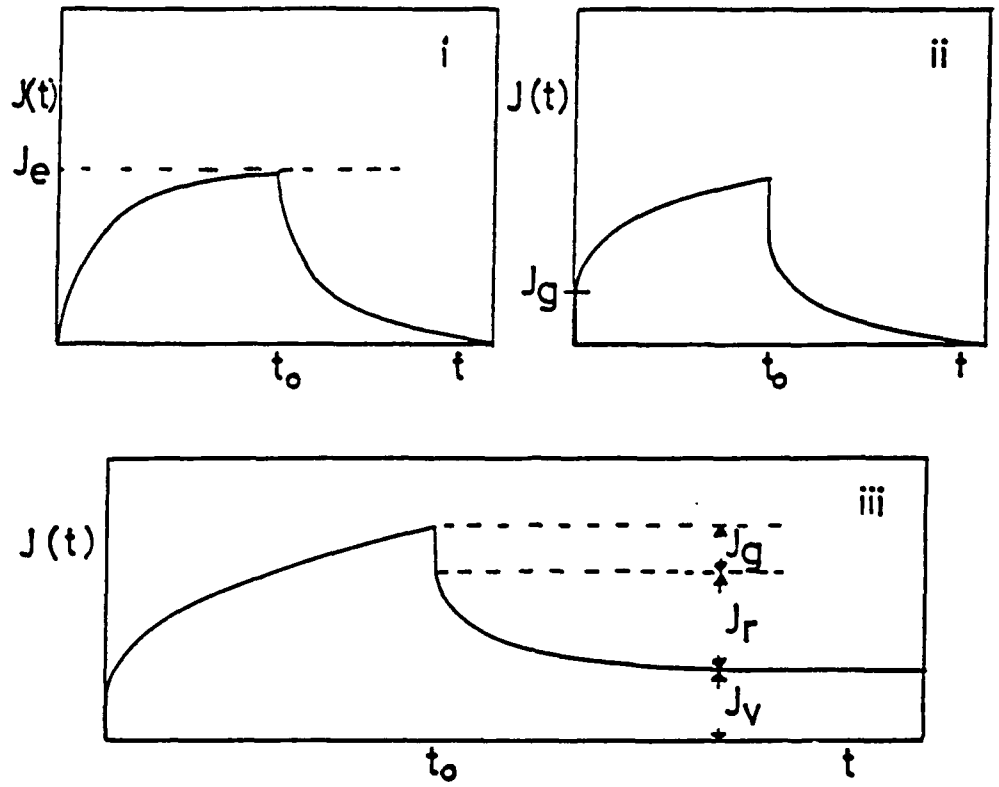

Figure 4. Creep Compliance Curves. Here J_e is the equilibrium compliance; J_g is the instantaneous or glassy compliance; J_r is the retarded compliance; and J_v is the viscous compliance which results in permanent deformation.

Figure 4(i) illustrates a solid-like response showing retarded compliance. This is the type of mechanical response that would be observed with an automobile suspension or engine mount. Figure 4(ii) shows a similar response, but with the addition of an instantaneous or glassy compliance J_g, which is also immediately recovered on removal of the stress at t_0. The response sketched in Fig. 4(iii) is for a viscoelastic fluid. Both a glassy and a retarded compliance are shown, but in this case there is a permanent strain shown as the viscous compliance J_v.

Yield is seen when the stress is increased to a sufficient level to produce a non-recoverable strain, *i.e.*, in order for a J_v value to be measured. This means that a test protocol is used that either (a) cycles the stress on and off, steadily increasing the level or (b) progressively increases the stress after a steady compliance reading is recorded. A simple rapid stress *vs.* time ramp is an unsatisfactory method for most materials. Complete recovery means that $\sigma < \sigma_y$; in addition, a plot of equilibrium compliance J_e *vs.* applied stress will indicate the range over which linear viscoelastic behavior can be observed. The experimental difficulty

here is the time scale between stress steps. Sufficient time is required to determine whether or not the strain is recoverable. As an example, consider the following concentric cylinder apparatus with a diameter of 25 mm and a gap of 2.5 mm. In addition, let us assume that the system is just showing plastic flow at an applied stress of 1 Pa, and that the viscosity is 10^5 Pa-s. For an instrument resolution of 1 mrad in rotational displacement, a time > 10^3 s is required to establish whether a J_e value has been achieved. While for rapid changes the applied stress might appear to be below σ_y, at long times motion would be observed and incorrect predictions would be made for ER device performance.

An additional problem occurs with the characterization of fluid systems when a linear viscoelastic behavior is being assumed for modeling purposes. Here 'linear' means that all elastic responses are Hookean and that viscous responses are Newtonian. Viscoelastic fluids show curves of the form of Fig. 4(iii). Many workers use the limiting slope of the J(t) curve to estimate the low-shear limiting viscosity η_0, and therefore wait until a linear slope is achieved. However, the strain has often become so large at this point that the material is no longer within the linear region. It is therefore much better to maintain the strain (*i.e.*, the compliance) small and to analyze the recovery, obtaining

$$\eta_0 = \frac{t_0}{J_v} \tag{4}$$

b. Continuous Shear

When stresses $\sigma > \sigma_y$ are applied, flow can be observed, and the instruments are capable of monitoring the rotational rates resulting from a wide range of applied stresses. Hence curves of viscosity *vs.* shear stress or of shear stress *vs.* shear rate can be obtained. Figure 2 above shows the customary types of plot. The usual instrument limitation is that, at high electric fields, the maximum available stress on the instrument may be less than the yield stress.

2. Controlled Strain

a. Continuous Shear

This is the arrangement that many conventional rotational viscometers have utilized. In this case, the measuring element is rotated at a constant angular velocity, and the resulting torque on the instrument is monitored. The data are usually plotted as shear stress *vs.* shear rate or viscosity *vs.* shear rate. The majority of ER fluids show shear-thinning behavior, and curves of the form shown in Fig. 5 are obtained. The response frequently sought is for a material which shows plastic behavior at high applied electric fields; the material should have large values of both the dynamic or Bingham yield stress σ_B and the static yield stress σ_y. The plastic viscosity η_∞ and the extrapolation to σ_B are relatively well defined. The value of σ_y estimated from this type of flow curve is frequently subject to large uncertainties; the use of controlled stress may provide a more reliable technique (see Section 1.a).

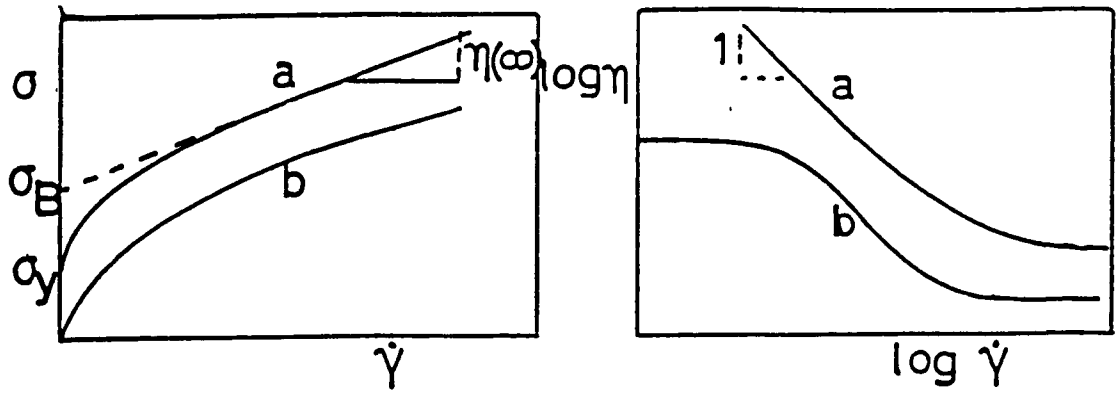

Fig. 5. Flow curves for plastic and pseudoplastic materials: (a) plastic response; (b) pseudoplastic response.

b. Stress Relaxation

In this experiment a small-amplitude step strain is rapidly applied to the sample, and the resulting stress $\sigma(t)$ is monitored as a function of time. Diffusive motion of the microstructural components of the fluid allow relaxation of the stress as the material is held at constant strain γ_0. The relaxation function or modulus G(t) is given by

$$G(t) = \frac{\sigma(t)}{\gamma_0} \tag{5}$$

In any material there is a distribution of diffusive time scales, and this technique provides access to a wide range of these with a single deformation. The limitation for rapid processes is due to the time needed to mechanically apply the deformation. With current instrumentation, 50 ms represents a realistic minimum. The long-time limit is governed by the electronic stability of the instrument and by secondary problems such as solvent loss from the sample. A solid-like material shows a residual modulus of G_0 in addition to that part of the initial or short-time value G_∞, which can relax, *i.e.*,

$$G(t) \to G_\infty \quad as\ t \to 0; \qquad G(t) \to G_0 \quad as\ t \to \infty \tag{6}$$

c. Stress Growth

The buildup of stress as strain is applied is an important feature in some applications, especially if a large stress overshoot occurs. In order to characterize this clearly, a constant rate of shear is applied at t = 0, and the stress is measured as a function of time. The result is usually recorded as the viscosity $\eta(t)$:

$$\eta(t) = \frac{\sigma(t)}{\dot{\gamma}} \tag{7}$$

The response of a viscoelastic fluid is to give an initial slope that should equal G_∞, however, equipment of extremely high resolution is required to give an accurate G_∞-value. Typical plots for simple viscoelastic materials are sketched below in Fig. 6.

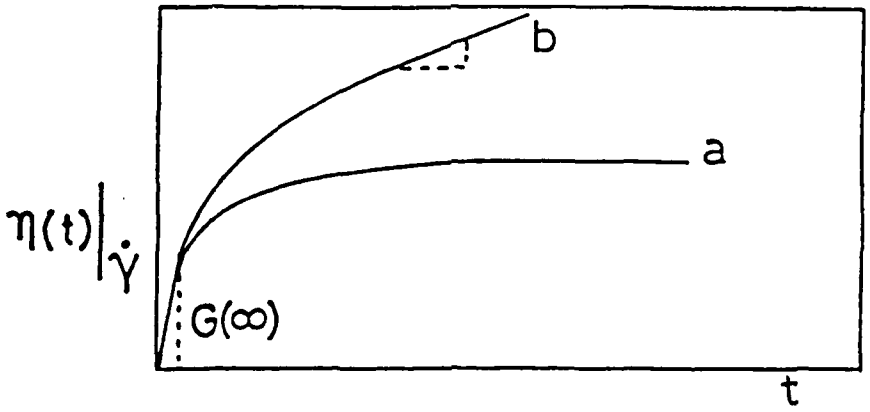

Figure 6. Stress growth curves for (a) a viscoelastic fluid and (b) a viscoelastic solid.

For a material with a yield value, *i.e.*, a viscoelastic solid, the curve continues to rise with constant slope at long times and gives an estimate of the equilibrium modulus G_0 if the total strain is small. A viscoelastic fluid gives a plateau at long times equal to the viscosity at that shear rate. At high shear rates, stress overshoot may be observed. This can often be seen with polymer solutions and hence, when polymeric thickeners or rheology modifiers are added to reduce sedimentation, this response can also be found with dispersions. Associative thickeners in aqueous solutions show this effect to a marked degree, and it is likely that if associative thickeners are designed and synthesized to work with ER fluids, they will react similarly.

d. Forced Oscillation

A convenient means of characterizing viscoelastic responses of materials is to subject them to a sinusoidally oscillating strain and then to monitor the stress. The experiments are carried out as a function of frequency and amplitude. The measured parameters are (1) the maximum amplitudes of the stress and the strain and (2) the phase difference between the two waveforms. If small strains are employed, the elastic responses are Hookean and the viscous are Newtonian, *i.e.*, they are linear materials (Ferry 1983). The frequency response is clearly important when ER fluids are used in vibration-damping applications. However, field use nearly always subjects the materials to strains which will take them outside the linear range. It is therefore important to understand nonlinear behavior, although there is little information available even on linear responses of ER fluids. These measurements are important in helping to understand the underlying mechanisms in ER fluids as well as for laboratory characterization and relative evaluation.

The complex modulus is defined as

$$G^* = \frac{\sigma_0}{\gamma_0} e^{i\delta} \tag{8}$$

where the subscript 0 indicates the maximum amplitude, the phase lag between the wave forms is δ, and $i^2 = -1$. If the strain is sufficiently small to ensure linear behavior, the two waveforms are

$$\gamma = \gamma_0 e^{i\delta} \qquad \sigma = \sigma_0 e^{i(\omega t + \delta)} \tag{9}$$

where t is time and ω is the angular frequency. Any elastic response is in phase with the strain and the loss response is the quadrature component so that

$$G^* = G' + iG'' \tag{10}$$

Here G' is called the storage modulus and G'' the loss modulus. The storage and loss moduli are calculated from the complex moduli as illustrated in Fig. 7a below.

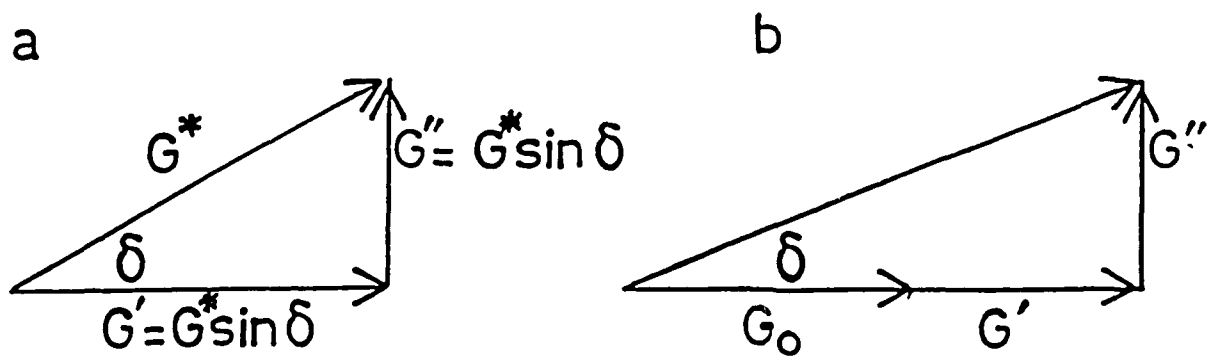

Fig. 7. Dynamic moduli for (a) a viscoelastic fluid and (b) a viscoelastic solid.

The ratio of G'' to G' is tan δ and the characteristic time is given by $1/\omega_1$, where ω_1 is the value of ω where tan $\delta = 1$ (*i.e.*, where $G' = G''$).

Figure 7(b) illustrates a viscoelastic solid for which there is a G_0 value.

IV. Modeling Responses

1. Viscous Flow

a. Newtonian Suspensions

Dilute suspensions in which particles are well dispersed show Newtonian behavior. ER fluids which consist of suspensions of particles are formulated at volume fractions of *ca.* 0.2 to 0.3. At this concentration, the viscosity is increased by a factor of 3 to 5 times over that of the base liquid. Hence, if a Newtonian oil of low viscosity is used, then a Newtonian suspension of low viscosity can be expected as a result. Assuming the particles to be spherical and monodisperse, the viscosity is adequately described by the Krieger-Dougherty equation (Krieger 1972)

$$\eta = \eta_s\left(1 - \frac{\phi}{\phi_m}\right)^{-[\eta]\phi_m} \tag{11}$$

where η_s is the viscosity of the base oil, ϕ_m is a maximum packing fraction at which flow can occur and $[\eta]$ is the intrinsic viscosity, which has a value of 2.5 for hard spheres.

The intrinsic viscosity is a function of particle shape, so that anisometric particles have $[\eta]$-values which are greater than 2.5. High axial ratios are required before large $[\eta]$-values are seen, however. For example, large prolate ellipsoidal particles with an axial ratio of *ca.* 4:1 show *ca.* 10% increase in the intrinsic viscosity from the hard sphere value (Goodwin 1982). However, if clay particles are used to produce ER fluids, then the value may be considerably higher, as these types of particles can have very high axial ratios.

At moderate to high shear rates, a ϕ_m-value of *ca.* 0.6 in the above equation gives a fit to the data found with suspensions of monodisperse spherical particles. When the system is polydisperse, a higher value of ϕ_m is required; values as high as 0.8 may be appropriate for broad distributions.

For a concentric cylinder instrument with inner cylinder of radius R_1 and length L and outer cylinder of radius R_2, the Margules equation gives the torque M on the inner cylinder with an angular velocity of the outer cylinder of Ω (Reiner 1960) and for steady flow the shear rate at the surface of each cylinder is indicating that the approximation to a constant shear rate is good only if $(R_2 - R_1) << R_1$).

$$M = 4\pi\eta L\Omega\frac{R_2R_2}{R_1^2 - R_1^2} \tag{12}$$

$$\dot{\gamma}(R_1) = \frac{2\Omega R_2^2}{R_2^2 - R_1^2}; \qquad \dot{\gamma}(R_2) = \frac{2\Omega R_1^2}{R_2^2 - R_1^2} \tag{13}$$

b. **Bingham Plastic**

A material of this type has a simple constitutive equation of the form

$$\sigma = \sigma_B + \eta_\infty \dot{\gamma} \tag{14}$$

It was shown by Klass and Martinek (1967) that the high shear limiting viscosity η_∞ is equal to the suspension viscosity at zero electric field. The value of σ_Y is the Bingham yield stress, which is the value extrapolated from the flow curve, *i.e.*, the dynamic yield stress. It is therefore attractive to use this simple constitutive equation to model the behavior of ER fluids and to attempt to calculate the value of σ_B from dipolar forces acting between particles coupled with a model of the structure.

This is an extremely simple model and can only be useful at moderate to high shear rates. At very low values of shear rate there must always be some curvature to the flow curve. This arises from two sources:

i. There is a progressive change in the steady-state structure with shear rate away from the static structure towards that which prevails at high shear rate. With ER fluids, there is a linearized connective structure under quiescent conditions which is completely lost when the shear rates are so high that the viscosity approaches that measured at zero electric field. This does not mean that there are no dipolar forces at high shear rates, but rather that hydrodynamic forces dominate them.

ii. The expression which is equivalent to the Margules Equation for the torque of a pair of concentric cylinders but with a Bingham plastic is the Reiner-Riwlin Equation (Reiner 1960):

$$M = 2\pi L \eta_\infty \frac{R_1^2 R_2^1}{(R_2^2 - R_1^2)} [\Omega + \frac{\sigma_B}{\eta_\infty} \ln \frac{R_2}{R_1}] \tag{15}$$

Now the maximum stress occurs at the surface of the inner cylinder, and is at a minimum at the outer cylinder surface. Where the minimum value is less than σ_B there will be no flow; *i.e.*, there will be an unsheared layer along the outer wall. Hence for all the sample sheared, the stress at the outer cylinder must exceed σ_B. With σ_1 being the measured stress at the wall of the inner cylinder and with r as the position of the start of the unsheared layer,

$$\sigma_1 = \frac{\eta_\infty r^2}{(R_2^2 - R_1^2)}\{\Omega + \frac{\sigma_B}{\eta_\infty}\ln\frac{r}{R_1}\} \tag{16}$$

If this process is not recognized and the nominal shear rate is calculated from

$$\dot{\gamma} = \frac{\Omega R_2}{(R_2 - R_1)} \tag{17}$$

an error will result as only part of the sample is being sheared. The problem is minimized if cylinders of large radii are used and the gap between them is small.

c. **Modeling the Viscosity**

The aim of the characterization of an ER fluid is in part to provide a database for which the predictions from detailed structural models can be compared and tested. The forces acting between the particles while there is an applied field are

a. van der Waals attraction
b. electrostatic repulsion
c. polarization forces
d. viscous forces
e. thermal or Brownian forces

When a significant ER effect is observed, polarization forces dominate forces a, b and e, and only the ratio of the viscous to polarization forces needs to be considered. The Mason Number *Ma* gives this ratio (Marshall 1989) as

$$Ma = \frac{\eta_\infty \dot{\gamma}}{2\epsilon_s(\beta E)^2} \tag{18}$$

where E is the applied field strength and β is a function of the ratio $\epsilon_r = \epsilon_p/\epsilon_s$ of the permittivities ϵ_p of the particles and ϵ_s of the medium:

$$\beta = \frac{\epsilon_r - 1}{\epsilon_r + 2} \tag{19}$$

It has been shown that for a wide range of field strengths, temperatures, shear rates and volume fractions of a typical fluid, a good description of the viscosity is given by

$$\eta = \eta_\infty[\frac{K\phi}{Ma} + 1] \tag{20}$$

where K is a material parameter related to the details of the structure and particle/particle interactions in the fluid. This expression was derived using the constitutive equation for a Bingham material and gave excellent fits to the data at shear rates as low as $10^{-4}\ s^{-1}$. This illustrates the utility of the Bingham model in qualitative use, while recognizing that it is only an approximate description of an ER fluid. The data were obtained using parallel plates with a narrow gap, and no difficulty due to static yield behavior was found in modeling the flow.

4. Pseudoplastic Behavior

At low fields, ER fluids behave as fluids rather than solids, *i.e.*, there is no static yield stress, it is possible to measure a zero shear limiting viscosity η_0, and a curve of the form illustrated in Fig. 2(b) can be found. Of course the high shear stress data will still extrapolate to give a value of σ_B. As a result, modeling of the viscosity using the Mason Number will still be satisfactory over part of the shear rate range.

At low applied fields, where the static yield stress vanishes, the resulting sigmoidal curve of viscosity as a function of shear rate or shear stress must be described. The equation due to Cross (Cross 1965, 1968) gives a useful two-parameter expression in terms of the limiting viscosity values:

$$\eta = \eta_\infty + \frac{\eta_0 - \eta_\infty}{1 + c\dot{\gamma}^n} \tag{21}$$

where the expected range of the exponent is $1 > n > 2/3$, and the coefficient c is characteristic of the material. Papir and Krieger (1970) showed that a range of hard-sphere systems were described by a similar expression but in terms of the reduced shear stress σ_r:

$$\sigma_r = \frac{\eta\dot{\gamma}a^3}{k_B T} \tag{22}$$

$$\eta = \eta_\infty + \frac{\eta_0 - \eta_\infty}{1 + b\sigma_r} \tag{23}$$

where a is the particle radius, k_B is the Boltzmann constant and T is the absolute temperature. To date these expressions have not been utilized with ER fluids, and there is no modeling which relates η_0 or b to parameters such as applied field strength *etc.* Not all ER fluids will be utilized at high field strengths where static yield stresses are observed, and hence their pseudoplastic response requires attention in terms of measurement and modeling.

5. Temporal Changes

The response times of ER fluids are usually rapid, and this is often a desirable feature. It is in part due to the suspensions' being made up of approximately spherical particles at moderate concentrations. The rebuilding of suspension structure on cessation of shear is a feature of thixotropic systems which can be followed by recording the increase in the value of the storage modulus G' with time:

$$G'(t) = G_0 + (G_\infty - G_0)(1 - e^{-\frac{t}{\tau}}) \tag{24}$$

The prevention of sedimentation by the addition of soluble polymeric species is likely to introduce thixotropic behavior, as will the use of anisometric particles in the fluids. At present, the most promising fluids do not have marked thixotropic behavior; temporal changes are more often due to the effects of electrophoretic migration of particles and of ohmic heating of the fluids.

Particles which carry an electrical charge will migrate when placed in an electric field (Shaw 1983). The velocity v_p of the particles is

$$v_p \propto \frac{E e_s \zeta}{\eta_0} \tag{25}$$

where ζ is the electrical potential at the outer edge of the particle (including any stabilizing species), and is typically of the order of 10 to 100 mV. Clearly, media with low dielectric constants and high viscosities reduce the velocity, but do not reduce it to zero. At high field strengths the attractive interactions between the particles can prevent motion. However, under DC fields of low strength, significant migration can occur if the field is applied for time scales of minutes or hours. AC fields minimize this effect. Even at high field strengths, there may be marked inhomogeneities in structure, and this must be developed in whatever models are used to give a detailed description of the rheology.

2. Linear Viscoelasticity

a. Simple Responses

The simplest response is that shown by a material with a single characteristic time associated with its behavior. For example in oscillation, the frequency dependence of a viscoelastic liquid is given by

$$G'(\omega) = G_\infty \frac{(\omega\tau)^2}{1 + (\omega\tau)^2} \tag{26}$$

$$G''(\omega) = G_\infty \frac{\omega\tau}{1 + (\omega\tau)^2} \tag{27}$$

$$\eta_{\infty} = G_{\infty}\frac{\tau}{1+(\omega\tau)^2} \tag{28}$$

Here τ is the characteristic or relaxation time. At high frequencies, *i.e.*, when $\tau >> \omega^{-1}$, $G'(\omega) \rightarrow G_{\infty}$; and at low frequencies, or when $\tau << \omega^{-1}$, $\eta'(\omega) \rightarrow \eta_0 = \tau G_{\infty}$, *i.e.*, $\tau = \eta_0/G_{\infty}$.

However, if the material is a viscoelastic solid,

$$G'' = G_0 + G_{\infty}\frac{(\omega\tau)^2}{1+(\omega\tau)^2} \tag{29}$$

and, as $\omega \rightarrow \infty$, $G' \rightarrow G_0 + G_{\infty}$. Also, there will be no finite value for η_0. The expressions for the relaxation modulus for the fluid and solid materials are, respectively,

$$G(t) = G_{\infty}e^{-\frac{t}{\tau}} \qquad \textit{(liquid)} \tag{30}$$

$$G(t) = G_0 + G_{\infty}e^{-\frac{t}{\tau}} \qquad \textit{(solid)} \tag{31}$$

In experimental measurements of stress growth, the stress is monitored as a function of time at a constant shear rate. Hence, the result is normally expressed as a buildup of viscosity with time:

$$\eta(t) = \eta_0[1-e^{-\frac{t}{\tau}}] \tag{32}$$

Note that at long times ($t \rightarrow \infty$), $\eta(t) \rightarrow \eta_0$, and since $\eta_0 = \tau G_{\infty}$, the initial slope is

$$\frac{d\eta(t)}{dt} = G_{\infty}e^{-\frac{t}{\tau}} \tag{33}$$

All these equations are only valid for strains sufficiently low that the materials remain within the linear viscoelastic region.

For creep experiments, the compliance is monitored as a function of time. Here again, care must be used to ensure that the response remains linear. It is often better to apply the stress for a short time and analyze the recovery curve, because this helps to ensure that the experiment is limited to small strains. The measured compliance is the sum of an instantaneous response, a retarded response and, if the material is fluid, a viscous compliance:

$$J(t) = J_g + J_r[1-e^{-\frac{t}{\tau}}] + \frac{t}{\eta_0} \tag{34}$$

It should be noted that this is already becoming quite a complicated material response. Although there is only one characteristic time written explicitly in the above equation, when a material which shows this behavior is subjected to an oscillating strain, at least two characteristic times will be obtained. This simplest case only occurs when the value of τ for the retarded compliance is numerically equal to $\eta_0 J_g$.

b. **The Integral Equations**

Most materials have a range of time scales for relaxation or retardation processes. This may be due to dispersity of size, shape, molecular weight and local structure. The range can be narrow, as in some monodisperse colloidal systems, or very broad, as in some concentrated polymer gels. A range of relaxation (or retardation) processes may be represented by summing a series of exponential functions. This may give a quite adequate description of the material behavior. However, it implies a series of discrete times τ_i, which may be a physically sound model, but equal weighting is given to each τ_i, which is less satisfactory. The alternative approach is to use a spectrum of processes with a distribution function. The relaxation spectrum is given the symbol H, and is normally used on a logarithmic time base as broad behavior is expected. The value of H at time τ is equal to

$$H|_{t=\tau} = G_\infty P(\tau) \tag{35}$$

i.e., the product of the high frequency modulus of a process with a characteristic time equal to τ and the probability $P(\tau)$ of that process occurring. The equations for the moduli now become:

Oscillation:

$$G' = \int_{-\infty}^{+\infty} H(\tau) \frac{(\omega\tau)^2}{1+(\omega\tau)^2} d\ln\tau \tag{36}$$

$$G'' = \int_{-\infty}^{+\infty} H(\tau) \frac{\omega\tau}{1+(\omega\tau)^2} d\ln\tau \tag{37}$$

$$\eta' = \int_{-\infty}^{+\infty} H(\tau) \frac{\tau}{1+(\omega\tau)^2} d\ln\tau \tag{38}$$

with the limiting forms:

$$G' \to G_\infty = \int_{-\infty}^{+\infty} H(\tau)\, d\ln\tau \qquad as\ t \to \infty \tag{39}$$

$$\eta' \to \eta_0 = \int_{-\infty}^{+\infty} \tau H(\tau)\, d\ln\tau \qquad as\ t \to 0 \tag{40}$$

Stress Relaxation:

$$G(t) = \int_{-\infty}^{+\infty} H(\tau) e^{-\frac{t}{\tau}}\, d\ln\tau \tag{41}$$

$$G(t) \to G_\infty = \int_{-\infty}^{+\infty} H(\tau)\, d\ln\tau \qquad as\ t \to 0 \tag{42}$$

Stress Growth:

$$\eta(t) = \int_{-\infty}^{+\infty} \tau H(\tau)[1 - e^{-\frac{t}{\tau}}]\, d\ln\tau \tag{43}$$

Creep experiments are expressed in terms of a retardation spectrum in order to describe the range of retarded elastic responses. This is given the symbol L and is similar, but not formally identical, to the relaxation spectrum. For example, the instantaneous or glassy compliance (which is equal to G_∞^{-1}) is excluded. The appropriate integral equation is:

Creep Compliance:

$$J(t) = J_g + \frac{t}{\eta_0} + \int_{-\infty}^{+\infty} L(\tau)[1 - e^{-\frac{t}{\tau}}]\, d\ln\tau \tag{44}$$

c. Estimation of the Spectra

The inversion of the above equations to yield the spectra is usually difficult due (i) to a limited data range and (ii) to the precision of the data. As a result, approximate methods are frequently used. For example, the simplest approximations are:

Storage Modulus:

$$H(\tau) \approx -\omega \frac{dG'}{d\omega}\Big|_{\omega=\tau^{-1}} \tag{45}$$

Loss Modulus:

$$H(\tau) \approx \frac{2}{\pi} G''\Big|_{\omega=\tau^{-1}} \tag{46}$$

Relaxation Modulus:

$$H(\tau) \approx -\frac{dG(t)}{d\ln t}\Big|_{t=\tau} \tag{47}$$

Stress Growth:

$$H(\tau) \approx \frac{1}{t}\frac{d\eta(t)}{d\ln t}\Big|_{t=\tau} \tag{48}$$

d. Nonlinearity

Although many polymer gels show linear response up to strains of 10% or higher, most particulate systems become nonlinear at much lower strains. As a guide, the shorter the range of the interparticle forces, the smaller is the linear range. With ER fluids, the limit of the linear range is less than 1% strain. As the strain is increased, *e.g.*, for an oscillation experiment, the storage modulus appears to decrease and the loss modulus first increases, and then it also decreases. Figure 8 illustrates the type of curves expected.

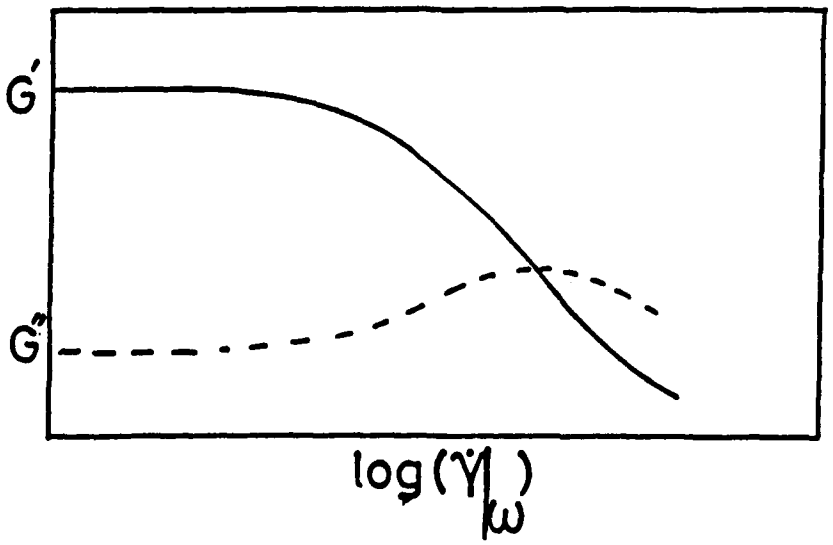

Figure 8. The effect of strain on the storage and loss moduli.

Hence at large strains, the loss can dominate the storage as the structure is destroyed. There are as yet few data in the literature for ER fluids, although this is clearly an important response to study since end-use situations may require solid-like behavior (*i.e.*, $G' >> G''$), and yet large strains may be applied.

References

Cross, M. M. "Rheology of Non-Newtonian Fluids", *J. Colloid Science* **20**, 417-437 (1965).

Cross, M. M., "Rheology of Viscoelastic Fluids: Elasticity Determined from Tangential Stress Measurement", *J. Colloid and Interface Science* **27**, 84-110 (1968).

Goodwin, J. W., "Colloidal Dispersions", Ed. J. W. Goodwin, Special Publications **43**, Royal Society of Chemistry, London, 178 (1982).

Ferry, J. D., "Viscoelastic Properties of Polymers", 3rd Ed., Academic Press, New York (1983).

Klass, D. L. and T. W. Martinek, "Electroviscous Fluids I. Rheological Properties", *J. Applied Physics*, **38**, 67-74 (1967).

Krieger, I. M., "Rheology of Monodisperse Latexes", *Advances in Colloid and Interface Science* **3**, 111-136 (1972).

Marshall, L., C. F. Zukoski and J. W. Goodwin, "Effects of Electric Fields on the Rheology of Non-aqueous Dispersions", *J. Chemical Society Faraday Transactions 1* **85**, 2785-2795 (1989).

Papir, Y. S. and I. M. Krieger, "Rheological Studies on Dispersions of Uniform Colloidal Spheres", *J .Colloid and Interface Science* **34**, 126-130 (1970).

Reiner, M., "Lectures on Theoretical Rheology", North Holland, Amsterdam (1960).

Shaw, D., "Electrophoresis", Academic Press, London (1983).

5.7 Fluid Mechanics

A. B. Metzner

I. Outline

Flow problems are solved in discrete steps, as follows:

A. Rheological constitutive equations are formulated which relate the stress in a fluid to the independent variables which determine the material response, through constitutive or physical properties of the fluid.

B. Experiments are carried out to determine the material coefficients appearing in the above constitutive equations. Ideally, these experiments involve well defined, simple flows with well defined boundary conditions.

C. The results obtained in A and B are employed to analyze flows in actual geometries of pragmatic interest. These analyses may be analytic, numerical or experimental, and involve conceptual tools ranging from dimensional analysis to massively parallel computers.

D. Deficiencies revealed in A and B by C are addressed by reformulation and further verification of the constitutive equations.

In the following, we concentrate on items A, B and C. Study of rheology and fluid mechanics of ER fluids has not yet progressed to the point where Item D is appropriate.

II. Analysis

A. Rheological Constitutive Equations

1. Steady Flows

Almost all work to date has chosen to employ the Herschel-Bulkley equation to describe the behavior of ER materials, or, in many instances, the slightly simpler Bingham plastic model. The Herschel-Bulkley formulation

$$\sigma = \sigma_y + K\dot{\gamma}^n \tag{1}$$

describes a fluid having a yield stress σ_y and a nonlinear power law response at higher deformation ratesunder conditions of steady, laminar shearing flow (Marshall 1989; Weyenberg 1989; Klingenberg 1990; Collins 1991; Kraynik 1991; Halsey 1992). Well defined experiments have long been available for measuring the physical property parameters σ_y, K and n from data of stress σ *vs.* the deformation rate $\dot{\gamma}$ for ordinary (*i.e.*, non-ER) fluids (Skelland 1967). In the case of ER materials, all three parameters are presumably dependent upon the imposed field strength.

Equation 1 is subject to a number of limitations which may be important in ER systems. It depicts a material which is perfectly rigid at stress levels below σ_y. Then, at stress levels exceeding σ_y, it flows as a perfect fluid, at deformation rates described by $\dot{\gamma}$.

This assumption of perfect rigidity at low stress levels is an excessive idealization. At low stress levels the material may not flow indefinitely, but it will surely deform, perhaps elastically, in the manner of other suspensions and foams (Kraynik 1991; Yoshimura 1987; Doraiswamy 1991). A very simple equation:

$$\sigma = G\gamma \qquad (for\ \sigma < \sigma_y) \tag{2}$$

is expected to provide a first approximation for this behavior (Yoshimura 1987; Mujumdar 1992). In Eq. 2, G denotes the elastic modulus of the solid-like, non-flowing material and γ the deformation imposed. While rheological and molecular dynamics simulations indicate some range of validity for Eq. 2, they also show (Kraynik 1991; Mujumdar 1992; Bonnecaze 1992) that it may be a significant oversimplification of the actual response of suspensions. While these references suggest that a beginning is being made in defining realistic constitutive descriptions, much further work will be needed: to resolve issues of thixotropy, on a more realistic gradual change from solid-like to fluid-like response, and to evaluate the dependence of the four material-property parameters (σ_y, G, K, n) upon field strength.

2. Unsteady Flows

Rheologists know that steady-state experiments considered or implied in the above discussion are quite tedious in comparison to "dynamic" experiments in which the fluid is not subjected to a steady strain rate ($\dot{\gamma}$) or to large deformations. Dynamic experiments are therefore preferred for data acquisition purposes. More importantly, speed of response of ER materials to changes in both the deformation levels imposed and in the voltage gradient are key questions in determining their suitability in potential applications. For both reasons, transient measurements are of much interest, and dynamic experiments may be the easiest of these.

In dynamic experiments a sinusoidal strain is imposed:

$$\gamma = \gamma_m \sin(\omega t) \tag{3}$$

The strain rate $\dot{\gamma}$ is then given by:

$$\dot{\gamma} = \gamma_m \omega \cos(\omega t) \tag{4}$$

The resultant shear stress, which is also time periodic, will be of unusually complex form, but can be decoupled in an infinite Fourier series:

$$\sigma = \gamma_m \sum_{k=1}^{\infty} [G_k' \sin(k\omega t) + G_k'' \cos(\omega t)] \tag{5}$$

in which each of the k harmonics is characterized by the coefficients G'_k and G''_k. For a linear viscoelastic material, for which the stress is linear with the strain or the strain rate, the first harmonics G_1' and G_1'' are the only nonzero ones; they are immediately identified as the storage modulus and the loss modulus, respectively (abbreviated to G' and G'' in the rest of this work). For the nonlinear model describing ER fluids, higher harmonic coefficients would also contribute to the stress curve, and the traditional method of analysis is no longer applicable. That is to say, dynamic experiments such as those reported in a number of published contributions (Gamota 1991; Jordan 1992) may be quite useful in elucidation of ER materials properties, but no adequate analysis of the relation of G'_k and G''_k to material properties appears to be available for ER systems. Kraynik and coworkers (1991) have carefully defined several of the issues which must be considered in the modeling of transient deformations of ER materials; Doraiswamy (1991) and Mujumdar (1992) and their coworkers have considered the description of somewhat similar suspensions exhibiting rate-dependent changes in elasticity and fluidity.

3. Three-dimensional Rheology

The above discussion has been restricted to one-dimensional shearing deformations. Since many devices employing ER fluids will not employ such simple deformation patterns, Eqs. 1 and 2 must be generalized. This may be accomplished in two levels.

First, many workers, beginning with Oldroyd (1949), have described 3-dimensional generalizations of the Bingham equation. Doraiswamy and coworkers (1991) have extended this to Eqs. 1 and 2, but it is important to note that these generalizations, although well defined, are not unique: several 3-dimensional, properly-invariant mathematical formulations may be provided. Experimental studies will be needed to discriminate among these.

Secondly, and far more seriously, the entire familiar framework of rheological constitutive equations commonly employed to describe polymeric materials rests on the intrinsic assumption of a stress tensor which is symmetric. Materials in an electric field are classic examples of systems for which such a simplification is clearly invalid (Truesdell 1965; Stokes 1966, 1984; Denn 1980), and this has been verified in the recent dynamic simulations of Kraynik and coworkers (1991). While there is an extensive literature on materials exhibiting so-called couple stresses, almost none of this has been subjected to experimental verification. Indeed, to this writer's knowledge, even the choice of appropriate boundary conditions at the bounding walls of a duct or device are unknown. Stokes (1966) has formulated one of the few first-order analyses of couple-stress fluids which is amenable to experimental verification, and his work represents a reasonable starting point for such considerations.

4. Summary

Rheological considerations for ER materials have been developed to describe some steady motions as well as selected transient deformations. These are not always compatible with each other; the dynamic (or transient) analyses are at the very least incomplete, and some may be incorrect. These studies must be brought to a reasonable level of completeness and generalized to provide rheological constitutive equations applicable to 3-dimensional motions of pragmatic interest. Finally, it is expected that the anisotropy of the stress tensor must be considered, and formulations developed in which the stress is dependent not only upon deformation, deformation rate and their invariant derivatives but, additionally, on the vorticity or spin-rate of the material, through material coefficients describing the couple stresses of these materials in an electric field.

B. Experimental Verification of Rheological Constitutive Equations

Results to date appear to have been restricted to either steady shearing flows or to measurement of dynamic coefficients, frequently in a single and non-ideal geometry. Extensions needed include:

1. Measurements in both rotational (Couette, cone-plate and parallel plate) and Poiseuille flow geometries (pressure-driven flows in a rectangular duct or in an annulus) are needed, and the dimensions of each instrument must be varied. The translation of results from one kind of experiment to another may prove non-trivial for fluids whose properties may vary with the boundary material and with distance from a boundary (Monkman 1991), and for materials in which the fields may induce position-dependent inhomogeneities. Thus it is not yet possible to make confident predictions of steady flows in a duct from measurements in a parallel plate device, or, perhaps, even to scale up ducted flows.

   Both steady-state and transient measurements are needed. In dynamic data, methods for relating experimental coefficients (G', G'') to material properties such as the σ_y, K and n in Eqs. 1 and 2 need development. (As we noted earlier, classical linear viscoelasticity frameworks are inadequate.) Transient start-up, shut-down and flow reversal measurements may be especially revealing to verify the utility of particle dynamics models (Kraynik 1991; Mujumdar 1992). Many such experiments are described concisely and authoritatively by Goodwin in §5.6 of this report. These describe linear viscoelastic materials, because analytical procedures for nonlinear materials are not yet available. At least a portion of the analyses described in §5.6 are not applicable to ER materials. This limitation needs to be addressed and resolved in continuing research. In dynamic measurements, the full frequency range of pragmatic interest should be covered; for fluids to be used in engine vibration dampers this may extend to at least 5 kHz.

2. The relevancy of the vast theoretical literature on flow of anisotropic materials needs to be established by carrying out measurements in which vorticity and deformation rate may be controlled separately.

C. Analysis of Flows of Pragmatic Interest

1. Let us consider Poiseuille or pressure-driven flow of an ER fluid between parallel plates of width w separated by a distance H. Let us further suppose that the fluid is adequately modeled by the Bingham plastic or Herschel-Bulkley equations. Using these equations one may calculate, for the Bingham case (Skelland 1967):

$$\frac{Q}{wH^2} = \frac{\sigma_w}{6\eta_\infty}[1 - \frac{3}{2}(\frac{\sigma_y}{\sigma_w}) + \frac{1}{2}(\frac{\sigma_y}{\sigma_w})^3] \tag{6}$$

in which Q denotes the flow rate and σ_w the wall shear stress $H\Delta p/2L$. The fluid properties are given by the yield stress σ_y and the plastic viscosity η_∞. A similar result may be derived for Herschel-Bulkley fluids.

Let us next suppose that we wish to scale these data, at the same field strength, to ducts with different plate separations H. It is clear from Eq. 6 that the apparent shearing rate $Q/(wH^2)$ will not vary if the stress σ_w is maintained at a fixed value; there is no dependence of this shearing rate upon H beyond that which is already incorporated in σ_w.

A very different result is obtained for fluids exhibiting couple stresses (Stokes 1966, 1984). At a fixed value of the stress level:

$$\frac{Q}{Q_0} = 1 - \frac{3}{a^2}[1 - \frac{1}{a}\tanh a] \tag{7}$$

in which Q_0 denotes the shearing rate in a duct of infinite spacing H. The parameter "a" denotes the dimensionless plate spacing H/λ, wherein λ describes the fluid length scale, dependent upon the electric field strength. Presumably the fluid length scale λ is relatable to the structure of the ER fluid. Equation 7, depicted in Fig. 1, shows that as the duct becomes smaller (H or a decreases) the flow becomes choked. More importantly, the ER effect is predicted to vanish as the duct size is increased, even though we are maintaining a fixed stress level and a fixed electric field strength. While there is no assurance that Eq. 6 and Fig. 1 portray actual materials quantitatively, they do suggest a hazard inherent in neglecting fluid anisotropy.

2. Shear stress *vs.* shear rate data, under steady-state conditions, have been shown to pass through a maximum under what appear to be well defined experimental conditions (Otsubo 1992). An example is given in Fig. 2. The stability of this experiment is surprising, since conventional analyses suggest that flow of such fluids

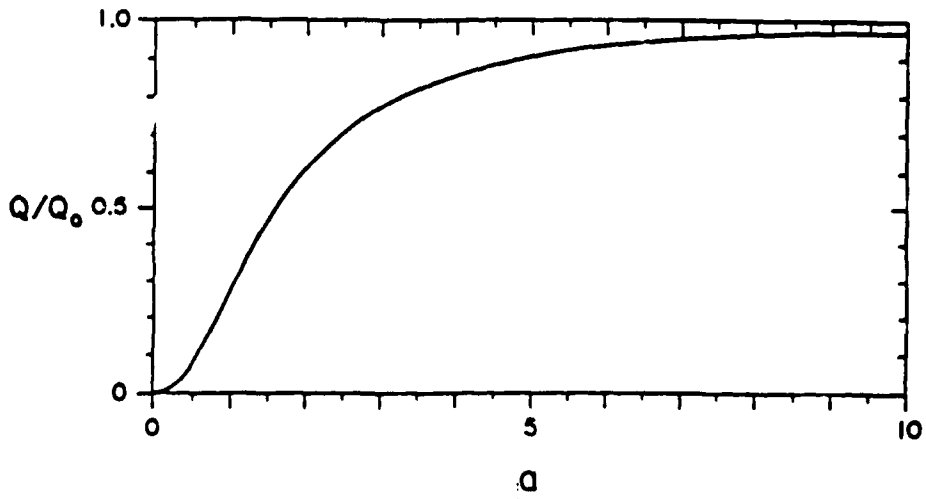

Fig. 1. *Effect of fluid anisotropy (internal stress couples) upon flowrate between parallel plates. The (dimensionless) spacing of the plates is given by "a". The term Q_0 denotes the flowrate in the absence of fluid anisotropy, Q that when the fluid has become anisotropic.* *Taken from Stokes (1984).*

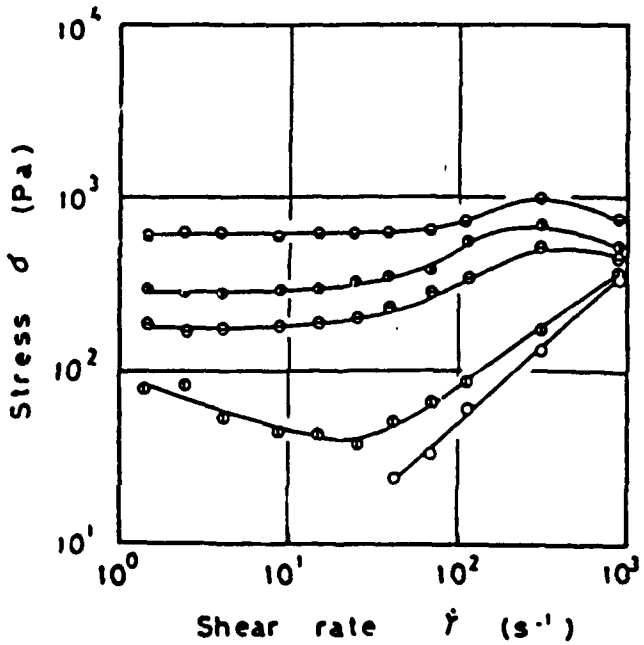

Fig. 2. *Illustration of maxima and minima appearing in rheological data for ER fluids. These may suggest that flow instabilities could be expected.* *Data are from Otsubo et al. (1992).*

will be unstable and possibly multivalued. However, stability analyses carried out to date have not included couple-stress phenomena, and may be inapplicable. In any event, the stability of flows of ER fluids is deserving of analysis. As an extension of stability studies, the uniqueness and laminarity of calculated flows may be of interest and, if so, requires experimental study.

3. In all of the above we have assumed fluid homogeneity. Industrial measurements have been called to our attention which indicate the separation of suspended solids in an ER suspension to produce a "filter cake" in the region in which the field is applied. Depending on the purposes of the field in a given application, this may not necessarily be detrimental, but the dynamics of any such cake formation, and of the fluid stability, need to be understood. The pronounced effects of the boundary material, perhaps due to boundary roughness, noted by Monkman (1991), also suggest inhomogeneity effects, albeit of a different kind.

4. Most suspensions of fine solids are thixotropic in behavior, *i.e.*, the structure breaks down upon prolonged shearing (Mewis 1979). In a Couette experiment of substantial duration, in which much of the suspension may be sheared because of the presence of only a small variation in stress level throughout the sample, the material response should therefore be different from that in duct flow, in which the core of the fluid field remains unsheared. That is, a higher apparent yield stress may be found in duct flows. This has been observed industrially, and emphasizes the need for careful simulations and analysis of suspension structure based on equations more sophisticated than Eqs. 1 and 2. This was begun (Mujumdar 1992) as an extension of traditional studies of thixotropy (Mewis 1979), but work to date is very preliminary.

5. Careful data and simulations are needed, not only for steady flows but for step-up and step-down experiments (in which deformation rates are abruptly changed and the stress response is observed). The transient changes in structure when a strain is first imposed upon a fluid at rest may be best illuminated by such unsteady state considerations. As in the case of the classic experiments by Moldenaers (1986, 1991) and her coworkers on liquid crystals, one might expect some of the transient behavior modes to be dependent primarily upon strain and only secondarily upon strain rate (Kraynik 1991; Doraiswamy 1991).

6. In view of potential applications in the field of vibration damping, we must require a study of oscillatory flows of both large and small amplitude. As already noted earlier, the frequency range needing coverage is very large: from less than 1 Hz to perhaps 5-10 kHz. The rapid material responses required in some applications may suggest the need for fluid formulations based upon homogeneous solutions of dielectrically anisotropic polymer molecules (Yang 1991), rather than use of suspensions containing macroscopic particles. Data on response time of suspensions (Hill 1991) appear to be very unsatisfactory: the response times are long and

apparently irreproducible. Studies of damping of oscillations have been initiated (Shulman 1987), but appear to be in very early stages of development.

7. In many applications, the flows will not only be in ducts of constant cross-section, but will contain converging and diverging regions. That is, the dependency of the fluid response on vorticity and on changing vorticity levels (*i.e.*, extensional deformations) is needed.

   These Lagrangian-unsteady flows will frequently involve Lagrangian-unsteady electric fields – *i.e.*, both flow strength and field strength may vary along a streamline, as may the relative directions of the field and the flow.

8. Possible effects of fluid, particle and electrical inertia may need to be considered, especially in rapidly changing flows.

These rheological and fluid mechanical studies all imply analytic, experimental and numerical activities. In rheology studies there is a need to observe the material structure, and in applying fluid mechanics we need to know the velocity field. Stress-strain and pressure drop-flow rate data are, by themselves, insufficient.

III. Summary

There appear to be several research needs in the general area of fluid mechanics of ER fluids, as follows:

1. Rheological experiments carried out to date do not suffice to define all of the variables adequately, even for the steady-state properties of homogeneous materials: effects of the size of the instrument or of the type of flow (Couette, Poiseuille or parallel plate) have not yet been adequately studied in any instance, and not at all for several problem areas. The appropriate boundary conditions needed to interpret the data are not yet known for anisotropic fluids, and effects of the roughness of bounding walls have not yet been studied adequately. Available analyses of anisotropic materials suggest that the ER effect may be lost as we scale up to large devices; clearly we must know the size limitations of the ER device, if any, imposed by the properties of the ER fluid.

2. Transient flows (transient from an Eulerian or fixed-position-in-space viewpoint) have been studied, but interpretive methods are incomplete for the available experiments. Recent studies of liquid-crystalline fluids, which present a somewhat similar structure, provide for a logical point of departure which has not yet been employed. Molecular dynamics simulations of transient structures seem likely to be very productive and have just begun. Continuing measurements of structure, accompanying rheological data, are needed.

3. Real flows of ER fluids will very generally be "Lagrangian unsteady" - *i.e.*, deformation rates and modes change along a streamline. No scientific study of any kind of these appears to be available as yet. What is it that changes along a streamline? Everything! The deformation rate, vorticity, mode of deformation (extensional *vs.* shearing), and electric field intensity may all be variable.

4. Thixotropy and material homogeneity concerns are likely to influence the flow of real materials, hence require elucidation.

5. Implied in some of the above, but perhaps worth singling out for special mention, is the fact that the material behavior in very rapid transients is important in practice, *i.e.*, we may need to extend the ranges of available instruments.

6. The stability, laminarity and uniqueness of flows of ER materials have not yet been studied. Some available data suggest that these may differ from the corresponding behavior of flowing materials in the absence of electric fields.

References

Bonnecaze R. T. and J. F. Brady, *J. Rheol.* **36**, 73 (1992).

Collins, E. A., C. F. Zukoski and 24 additional authors, *J. Rheol.* **35**, 1303-1461 (1991).

Denn, M. M., "Process Fluid Mechanics", Prentice-Hall, Englewood Cliffs (1980).

Doraiswamy, D., A. N. Mujumdar, I. Tsao, A. N. Beris and A. B. Metzner, *J. Rheol.* **35**, 647 (1991).

Gamota D. R. and F. E. Filisko, *J. Rheol.* **35**, 1411 (1991).

Halsey, T. C., J. E. Martin and D. Adolph, *Phys. Rev. Letters* **68**, 1519 (1992).

Hill, J. C. and T. H. Van Steenkiste, *J. Applied Physics* **70**, 1207 (1991).

Jordan, T. C., M. T. Shaw and T. C. B. McLeish, *J. Rheol.* **36**, 441 (1992).

Klingenberg, D. J. and C. F. Zukoski, *Langmuir* **6**, 15 (1990).

Kraynik, A. M., R. T. Bonnecaze and J. F. Brady, *Proc. Int. Conf. on ER Fluids*, R. Tao, ed. (1991).

Marshall, L., J. W. Goodwin and C. F. Zukoski, *J. Chem. Soc., Faraday I* **85**, 2785 (1989).

Monkman, G. J., *J. Rheol.* 35, 1385 (1991).

Mewis, J., *J. Non-Newt. Fluid Mech.* 6, 1 (1979).

Moldenaers P. and J. Mewis, *J. Rheol.* 30, 567 (1986).

Moldenaers, P., H. Yanase and J. Mewis, *J. Rheol.* 35, 1681 (1991).

Monkman, G. J., *J. Rheol.* 35, 1385 (1991).

Mujumdar, A. N., A. N. Beris and A. B. Metzner, *J. Rheol.* (submitted).

Oldroyd. J. G., *Proc. Camb. Phil. Soc.* 43, 100 (1947) and 45, 595 (1949).

Otsubo, Y., M. Sekine and S. Katayama, *J. Rheol* 36, 479 (1992).

Shulman, Z. P., B. M. Khusid, E. V. Korobko and E. P. Khizhinsky, *J. Non-Newt. Fluid Mech.* 25, 329 (1987).

Skelland A. H. P., "Non-Newtonian Flow and Heat Transfer", Wiley, N.Y. (1967).

Stokes, V. K., *Phys. Fluids* 9, 1709 (1966).

Stokes, V. K., "Theories of Fluids with Microstructure", Springer, Berlin (1984).

Truesdell C. and W. Noll, "The Non-Linear Field Theories of Mechanics", in "Handbuch der Physik", S. Flügge, ed., Springer, Berlin (1965).

Weyenberg, T. R. and E. A. Collins, unpublished review (1989).

Yang I. K. and A. D. Shine, in "Abstracts - 63rd Annual Meeting, Society of Rheology" (1991); *J. Rheology* 36, 1079-1104 (1992).

Yoshimura A. S., and R. K. Prud'homme, *Rheol. Acta* 26, 428 (1987).

5.8 Comparisons between Electro-Optical and Electrorheological Effects

Theo van de Ven

I. Introduction

Suspensions of particles show a variety of phenomena when subjected to an electric field. Electrorheological (ER) effects are only one manifestation of a number of closely related phenomena. Besides changing their rheological properties, suspensions also change, among others, their optical properties at the same time. It is of interest to compare these ER with electro-optical (E-O) effects for a number of reasons. A vast scientific community exists regarding E-O effects, with their own scientific organizations and conferences (*e.g.*, Jennings 1991). Many E-O and ER effects are manifestations of the same underlying mechanism, and the study of E-O effects can improve our understanding of ER effects. A few studies have been reported on the E-O effects of suspensions subjected to flow (Okagawa 1987; Johnson 1985).

Most studies in electro-optics deal with suspensions of non-spherical particles or macromolecules, and the E-O effects are a manifestation of the alignment of these particles with the electric field. In ER studies, most suspensions contain spherical or near-spherical particles, and the effects are due to the formation of chains of particles that eventually form a network that spans the gap between the electrodes which create the electric field. At first sight these systems appear different, but the first step in the change in structure that occurs when an electric field is applied is the formation of doublets that line up in the electric field. This first step is fairly well understood, and has many similarities with the alignment of non-spherical particles. A system of two spheres behaves in many respects like a single non-spherical particle (van de Ven 1989).

In this section of the report, the similarities and differences between E-O and ER effects will be discussed in some detail.

II. Mechanisms of Polarization

Most ER and E-O phenomena are caused by polarization of the suspended particles by the external electric field. This is true for both aqueous and non-aqueous media. Polarization of the particles causes them to behave as dipoles, and the interactions of the dipoles are responsible for ER effects. The same induced dipoles lead to E-O effects. Polarization occurs for all particles that have a dielectric constant that is different from that of the bulk fluid. Even for particles with the same dielectric constant as that of the medium, surface polarization can cause the occurrence of a dipole moment, as can polarization of the ionic atmosphere surrounding the particles.

A. Polarization of the Particle

When a particle of dielectric constant ϵ_p is suspended in a medium of dielectric constant ϵ_s, an electric field of strength E will induce a dipole moment p in the particle:

$$\underline{p} = \underline{\underline{\alpha}} \cdot \underline{E} \tag{1}$$

where α is the polarizability of the particle, which is proportional to its volume and depends on ϵ_p, ϵ_s and the shape of the particle. In general $\underline{p}$ is a vector and $\underline{\underline{\alpha}}$ a tensor. This dipole moment causes a torque L on the particle given by

$$\underline{L} = \underline{p} \times \underline{E} = \underline{\underline{f_r}} \cdot \underline{\omega} \tag{2}$$

which causes the particle to rotate with angular velocity $\underline{\omega}$; $\underline{\underline{f_r}}$ is the rotary friction tensor, for axisymmetric particles a scalar depending on viscosity and particle shape.

Since in Eq. 2 both f_r and p scale with the volume of the particle, the angular velocity of the particle, and thus the time required for the particle to align with the electric field is independent of the volume of the particle, and depends only on its shape and the dielectric properties of particles and medium. From Eq. 2 it follows that for an axisymmetric particle the angular velocity equals (Chaffey 1964).

$$\omega = \frac{d\theta}{dt} = -\frac{\sin\theta \cos\theta}{\tau_{al}} \tag{3}$$

For an axisymmetric homogeneous isotropic particle, the alignment time equals

$$\tau_{al} = \frac{\eta_s}{\epsilon_0 \epsilon_s f(\epsilon_r, a/b) E^2} \tag{4}$$

η_s being the viscosity of the medium and f a known function of the dielectric constant ratio $\epsilon_r = \epsilon_p/\epsilon_s$ and the axial ratio of the particle (a/b). θ is the angle between the axis of symmetry of the particle and the electric field. Equation 4 gives the time scale over which alignment occurs and shows that the angular velocity scales with E^2. Equation 4 applies when only the body of the particle is polarized. It applies to both aqueous and non-aqueous media. It is this rotary motion of the particles that is responsible for many E-O effects. Changes in orientation of suspended particles lead to changes in rheological and optical properties (and a variety of other properties as well). As we will show in section D below, two spherical particles behave rather similarly to a single non-spherical particle. When other polarization mechanisms are present, Eq. 3 still applies but with a modified alignment time.

B. Surface Polarization

Consider again an axisymmetric particle subjected to an electric field E, but this time with electrical charges on its surface. If the charges are mobile to some extent, perhaps because they are tethered to the surface, loosely bound, or present in a thin conducting layer around the particle (*e.g.*, a water layer for particles suspended in a non-polar medium), the presence of an electric field will cause a polarization of surface charge. The particle does not need to have a net non-zero charge, since positive and negative charges can balance each other. For such a particle the alignment time equals

$$\frac{1}{\tau_{al}} = \frac{1}{\tau_{body}} + \frac{1}{\tau_{surf}} \tag{5}$$

where τ_{body} is given by Eq. 4 (for which $\tau_{al} = \tau_{body}$). The value of τ_{surf} depends strongly on how the charges are attached to the particle and how mobile they are. It is possible that under certain conditions τ_{surf} is smaller than τ_{body} and hence dominates the alignment. Like τ_{body}, $\tau_{surf} \propto E^{-2}$, but only for frequencies for which the ions can follow the field. Usually the effects of surface polarization disappear above a certain frequency (of the order of 10^4 Hz) (van de Ven 1992).

C. Double-Layer Polarization

For electrically charged particles in a polar medium, a third polarization mechanism exists: the ionic atmosphere around the particle (usually referred to as electrical double layer) can be polarized as well. The degree of polarization depends on the zeta-potential of the particle and the ratio of particle size to double-layer thickness. The alignment time τ_{DL} is again proportional to E^{-2}. For such particles,

$$\frac{1}{\tau_{al}} = \frac{1}{\tau_{body}} + \frac{1}{\tau_{surf}} + \frac{1}{\tau_{DL}} \tag{6}$$

Depending on conditions, these three terms can be of comparable magnitude or one of them can dominate. The double-layer polarization, like the surface polarization, disappears above a critical frequency (usually 10^6 Hz) where freely mobile ions can no longer follow the field. It follows that, when surface and double-layer polarization are undesirable, they can be made negligible by applying a high frequency electric field.

From the above discussion it follows that non-spherical particles change their orientation in an electric field in almost all conditions. This is true for aqueous and non-aqueous media. The alignment times are typically of the order of a fraction of a second. For small particles for which rotary Brownian motion is important, the alignment is a competition between random torques and electric torques, characterized by the dimensionless number $W = \tau_{BM}/\tau_{al} = D_r\tau_{al}/6$, D_r being the rotary diffusion coefficient. For $W < 1$ Brownian motion dominates, deviations from random orientations are small and all ER and E-O effects are proportional to W. For $W > 1$ most particles align with the electric field (on a

time sale τ_{al}) and remain aligned for as long as the field is on. Switching off the field causes a relaxation on a time scale $\tau_{BM} = D_r/6$.

III. Experimental Systems and Techniques

Electrically induced changes in orientation of suspended particles or macromolecules can be observed by a variety of techniques. Most properties of suspensions of non-spherical particles depend on their orientation distribution, and when this distribution changes the suspension properties change as well. Electro-optic properties that have been measured are changes in transmittance, light scattering, birefringence, dichroism, optical rotation, fluorescence, intensity fluctuation microscopy, *etc.* With all these techniques, one usually measures the following changes in the optical signal: (i) response time, (ii) steady state, and (iii) relaxation time. The response time measures how fast the system reacts after switching on the field. It can be varied from τ_{BM} for low fields to τ_{al} for strong fields. Since $\tau_{al} \propto E^{-2}$, the response time can be made extremely small; its value is only limited by the electric breakdown of the suspending fluid at high fields. The steady-state values depend on which property is being measured and on the values of $W(= \tau_{BM}/\tau_{al})$. The relaxation time is determined by rotary Brownian motion and is of order $(6D_r)^{-1}$. The response time and relaxation time are equally important for ER properties.

Particle alignment in electric fields occurs in almost all systems. In the area of electro-optics, most studies are on aqueous suspensions, but many non-aqueous suspensions have been studied as well. The main difference is that in non-aqueous media, τ_{body} is usually the dominant term in τ_{al}, while in aqueous media τ_{surf} and τ_{DL} can be dominant. In non-aqueous suspensions τ_{surf} can also be important, since the surfaces of small particles often contain both negative and positive ions, or else the particles are surrounded by a thin water layer.

In contrast to ER effects, where one is often interested in the lifetime of the ER fluid, in electro-optics one is usually interested in measuring or characterizing the properties of the suspended particles. This usually takes of the order of a few seconds or less. Hence one is far less concerned with long-term effects of heating of the fluid (Joule heating). This allows the study of aqueous suspensions with a rather large conductivity, systems that are unsuitable for ER applications. Nevertheless, E-O techniques can be used to characterize the ER fluids as well.

IV. Relation Between Electro-Optics and Electrorheology

The first step in the formation of structure in an ER fluid is the formation of a doublet that then aligns with the field, according to Eq. 3. Subsequent electrocoagulation leads to larger aggregates that form strings that also align with the field.

Consider two suspended particles in an ER fluid whose line of centers makes an angle θ with the externally applied electric field. This angle will change with time according to Eq. 3, but with τ_{al} replaced by τ_{el}, which is also a function of the separation distance r between the particles,

$$\tau_{el} = \frac{\eta_s}{\epsilon_0 \epsilon_s E^2} g(r,\epsilon_r) \ . \tag{7}$$

When the spheres touch, $\tau_{el} = \tau_{al}$. Besides changing their relative orientation, the spheres also change their separation distance with time:

$$\frac{dr}{dt} = -\frac{1}{\tau_{el}} (g_2 \cos^2\theta - g_3 \sin^2\theta) \tag{8}$$

where g_2 and g_3 are known functions of r and ϵ_r. It follows that for two spheres, τ_{el} is the characteristic time over which changes occur. Since it depends on the separation distance, this time depends on the volume fraction of particles, which determines the average distance between the particles. Obviously, the lower the volume fraction, the larger τ_{el}. Equation 7 applies when the body of the particle is being polarized, but surface and double-layer polarization can be taken into account in a way similar to that for non-spherical particles.

Many of the comments made regarding particle alignment in an electric field also apply to the electrocoagulation of two spheres. The time scale over which changes occur is determined by $W = \tau_{BM}/\tau_{el}$. For $W < 1$ changes occur on a time scale τ_{BM}, while for $W > 1$ on a time scale τ_{el}. The relaxation is always of order $\tau_{BM} = (6D_r)^{-1}$. This limits the response when the field is switched off. Typically for 1 μm spheres, $\tau_{BM} = 1$ sec. Shorter relaxation times can only be achieved for smaller particles. For ER applications that require a short relaxation time, one needs systems with small particles. In order to create the structures in an electric field, one needs conditions of $W > 1$ to avoid the breakup of these structures by Brownian motion. Hence, large fields are needed to create short response times when the field is switched on.

The doublet formation (which occurs on a time scale τ_{el}) is only the first step in the creation of larger structures. The subsequent formation of larger aggregates, however, occurs on a similar time scale. When the polarization is due to surface polarization of mobile ions, the possibility exists of charge transfer from one particle to another. This increases polarization and speeds up electrocoagulation. At the same time, this can be the cause of an electric current when a string of aggregates spans the gap between the electrodes and, as such, is undesirable. This could be avoided by a proper surface treatment of the particles.

VI. Conclusions

E-O theories and E-O experimental techniques are useful in the study of ER fluids. Similarities in polarization phenomena can be exploited in the design of particles for ER suspensions. Experimental E-O techniques can also be used for characterizing ER fluids.

References

Jennings. B. R. and S. P. Stoylov (editors), "Colloid and Molecular Electro-optics 1991, IOP, Bristol (1992).

Johnson, S. J., P. L. Frattini and G. G. Fuller, *J. Colloid Interface Sci.* **104**, 440 (1985).

Ogagawa A. and S. G. Mason. *Canadian J, Chem.* 5[illegible] [illegible]243 (1987).

Van de Ven, T. G. M., "Colloidal Hydrodynami[illegible] p. 404, Academic Press, London (1989).

Van de Ven, T. G. M., p. 71 in "Colloid and Molecular F[illegible]ectro-optics 1991", R. R. Jennings and S. P. Stoylov (editors), IOP, Bristol (1992).

5.9 Materials Aspects of ER Fluids

Frank E. Filisko

I. Prologue

Probably that aspect of electrorheology which is least understood, which attracts the least effort experimentally, and the least funding from government (virtually none) and industry, yet is the very essence of the field, is that of the materials which make up ER fluids. When devices are constructed to exploit the unique properties of these materials, it is always the properties of the materials which are criticized as being inadequate, rarely the design of the devices, which are generally designed based upon preconceived notions of how ER materials operate, rather than upon actual performance characteristics. Clearly, the material properties limit or dictate the device properties, yet the device design can well be such as to not make optimum use of the materials properties. In short, the devices can be no better than the materials, and both must be developed concurrently.

With this in mind, the understanding of the science of ER materials can be separated into two areas:

1. Understanding the basic physical and chemical principles responsible for the phenomenon.

2. Understanding the unique rheological properties of these materials and generating constitutive equations which predict properties from control parameters.

II. Mechanisms for Electrorheology

One of the first models was proposed by Winslow (1949), and follows directly from observations that chains or fibrils form between the electrodes under an electric field in static conditions. From such observations, he hypothesized that under shear, these chains become distorted and break but reform again very rapidly. This could account for the increased static yield stresses but does not readily explain the increased viscosities under flow nor address fundamental questions concerning the mechanism of interactions between particles, although a polarization mechanism is mentioned. The major items of concern regarding this model involve time scales for the structure to reform significantly, especially at high shear rates. Klass and Martinek (1967a) question this model based upon the facts that (a) materials show ER activity at very high frequency AC fields and that these chains could not reform substantially at such speeds, and (b) Brooks *et al.* (1986) reported a time scale for fibrillation of around 20 sec., which is much greater than the submillisecond responses reported (Klass and Martinek, 1967a,b).

An extension and modification of this idea proposes that the particles, interacting Coulombically, flow as clusters or aggregates, but in static situations they will form bridges or structures between the electrodes (Pohl 1951; Voet 1947). Both of these are probably correct within limits, but give no information concerning the basis of the particulate interactions on a molecular level.

In any case it is reasonable that the particles by themselves and/or in conjunction with the dispersing media must interact with the electric field in order for the chains to form and provide a yield stress and to hold the aggregates together. There are at least two ways in which the materials can interact. The particles and liquids can interact independently with the field by virtue of their inherent electrical and dielectric properties. On the other hand, the components can act cooperatively by virtue of the electrical double layer which develops around colloidal particles in a dispersing liquid, and by virtue of interfacial polarization which develops due to mobile charges at the interface of the two materials as a consequence of the differences in conductivity and dielectric properties of the two materials (Davies and Rideal 1961; Lyklema 1985). It is the latter situations which are the most commonly considered as related to ER activity, but it is not clear in most discussions to what extent these two are interrelated or in fact may be part of the same mechanism. Part of the confusion comes from the fact that although the basis for interfacial polarization is fairly well understood, theories related to electrical double layers which are well developed for suspensions in electrolytic fluids (Deinega and Vinogradov 1984), are very poorly understood (Kitahara 1984) in non-conducting dispersing media such as those used in ER fluids.

Klass and Martinek (1967a,b) were the first to involve electrical double layers in their explanation of ER activity. They proposed that the diffuse portion of the double layers, *i.e.*, that portion of the ions which reside in the liquid phase, would become polarized under the influence of the electric field, and the resultant electrostatic interactions of these distorted electrical double layers require additional energy during flow, especially in concentrated suspensions where the layers overlap. This energy is required due to the repulsion of the double layers, so that the particles cannot simply move in a streamline in the flow direction, but must have a transverse component which gives rise to the additional dissipation of energy. This idea is very similar to that suggested by Conway and Dobry-Duclaux (1960) as being responsible for the second electroviscous effect. They do not explicitly discuss the function of the adsorbed water, even though without it there would be no ER effect in these systems, yet the double layers would still exist albeit of a different nature (Kitahara 1984). Although not stated, it is implied that induced interfacial polarization is involved, which does involve the mobile charge carriers (ions) in the adsorbed water layer, and which must affect the composition of the double layer. An interesting observation, based upon the relative permittivities of the systems of particles they used and their relative ER effectiveness, is that the bulk dielectric properties of the dispersed particles do not seem to play an important role. Interfacial and surface properties of the particles are much more important in ER activity. This finding is supported by others as well (Klass and Martinek 1967a,b; Uejima 1972).

In a subsequent paper, Shulman, Deinega *et al.* (1971) focus more on orientation of the particles and on the structures or aggregates which may form in response to the electric field. In this case they directly involve the induced polarization of the particles in the ER phenomenon. They again invoke the concept of the electrical double layer, but distinguish two possibilities, one in which the double layer is very thin and associated with a surface conducting layer on the particles (*i.e.*, water) in a non-conducting fluid where ion exchange with the fluid is negligible, and the other in which ions extend into the surrounding medium (*i.e.*, a diffuse double layer). In the first case, the mobile charges responsible for the Maxwell-Wagner-Sillars (MWS) interfacial polarization also involve the water layer. Charge carriers can move along this conductive film under the influence of the electric field, giving rise to an MWS polarization. Thus moisture here serves an essential function. In the second case, ions may extend into the surrounding medium to various degrees, depending among other factors on the degree of conductivity of this medium. In reality it may be speculated that both mechanisms are probably involved in the ER phenomenon. What is certain, however, is that if either of the above is correct, then the surface charge conductivity introduced *via* the water certainly has a dramatic affect on the character of the double layer. This must actually be the case, since it is a fact that the bulk conductivity of ER fluids increases by many orders of magnitude for wet *vs.* dry particles (Filisko and Radzilowski 1990), thereby suggesting significant ion transfer in media with water compared to media without water.

In a following paper, Uejima (1972) presented dielectric measurements which provided the most direct support for and clarification of the above mechanisms. In these studies he followed dielectric properties, loss factor and dielectric constant *vs.* frequency for ER materials composed of cellulose particles with various amounts of adsorbed water. Specifically, he was observing the MWS interfacial dispersion which shifts to higher frequencies as the amount of water on the particles is increased. Whether the MWS dispersion disappears as all the water is removed is an interesting mechanistic question, since in these inherently heterogenous systems a MWS dispersion should still exist (von Hippel 1954, Maxwell 1892, Hedvig 1977), but charge carriers may be of a different type. By virtue of this work, then, Uejima is the first to experimentally associate MWS interfacial dispersion with ER activity and with adsorbed surface water.

Deneiga and Vinogradov (1984), also involving dielectric and rheological measurements, characterize this water layer further by suggesting that, upon increasing temperature and field, there is a corresponding rise in ER activity, as well as in the permittivity of the dispersions. However, these quantities peak at some point, and beyond this peak the bulk electrical conductivity of the system begins to increase dramatically. They suggest that a breakdown of the hydrate layer occurs with both temperature and field, resulting in a lowering of the activation barrier for flow of carriers between particles. A very important point implied here is that the bulk conductivity may not be related to ER activity, and the preferred situation is to confine charges to the particles by virtue of an infinite activation barrier between particles, if this is possible. Also in this paper they restate the significance of the extensive double layers which must develop (2 to 3 orders of magnitude thicker in

hydrocarbon liquids than in an electrolytic media) and the interaction of these to give rise to ER activity.

Up to this point in time, virtually all investigations continued to refine, modify and extend the basic concepts of the electrical double layer extending into the liquid phase, and of a conductive surface layer of water (or other electrolytes with various surfactants) on the particles giving rise to lateral mobility of ions, which are responsible for the classical MWS interfacial polarization. All these imply the presence of a conductive layer on the particles, most commonly ions in the water, but none explain why the ER effect disappears when the water is removed, even though the double layer still presumably remains as well as the MWS interfacial polarization.

A major advance occurred with the recent reports of particulate systems which produce ER active materials without the need for adsorbed water, or indeed any water (Block and Kelly 1985, 1988; Filisko *et al.* 1988, 1989, 1990). This is critical in resolving the model, since either the same mechanism is operating both with and without water; or, what is less likely, different mechanisms are operating. The implication here is very important, since it suggests that the mechanism responsible for the ER activity can be an intrinsic characteristic of the chemistry and physics of materials and not due solely to extrinsic factors such as water. The models proposed for this activity are really no different from those previously discussed, but are modified in the sense that the electrical double layer is probably less dominant and the mobile charge carriers are not a consequence of an adsorbed electrolyte. In an article by Block and Kelly (1990) more emphasis is put on particle polarization, which is really identical to MWS interfacial polarization. In part, support of this de-emphasis away from the double layer is a consequence of electrophoretic mobility (EPM) measurements on the actual fluids, which indicate that the materials can be very active electrorheologically yet show no significant EPM.

The explanation for the activity of these dry systems is essentially based upon the presence of mobile charge carriers intrinsic to the molecular character or chemistry of the particles. This local mobility of the carriers on the particles is high, but mobility between particles should be very low. In the anhydrous materials of Block and Kelly (1988, 1990), assuming no water to be present, the carriers are presumably electrons as a consequence of the semiconducting character of the particles; while in the alumino-silicate systems the charge carriers are ions which are intrinsic to the chemistry of the particles and located primarily on the internal surfaces of the particles (Breck 1974; Denkewicz 1987).

III. Recent Advances in Materials

Although the number of materials which can produce ER-active suspensions is almost infinite, it is well understood that for most the phenomenon is a consequence of an extrinsic component, most commonly adsorbed water (or some other electrolyte) with various surfactants added, and has nothing or little to do with the chemistry of the particles. There are of course properties of the materials which are beneficial to producing better ER materials, such as particle porosity, high surface area, and high affinity for water, but the ER

mechanisms are not related to the particle chemistry. Such "wet" or extrinsic systems, most of which were summarized recently by Block and Kelly (1988), were known for many years, and it was as well realized that the water severely limited the potential application of ER technology. Some of the reasons are listed below.

1. Thermal runaway currents, although small, but at the high voltages required, cause I^2R heating which drives off some water, which in turn increases the current, which increases the I^2R heating, which drives off more water, which increases the current, and so on until virtually all the water is gone and the fluid no longer works.

2. Relatively high currents and therefore need for high powers.

3. Limited operating temperature range due to the freezing and boiling of the water.

4. Electrolysis.

5. Corrosion of devices containing fluids.

6. Instability of fluids with time and operation.

7. Irreproducibility from batch to batch.

8. Solid mat formation upon settling due to inter-particulate hydrate bond formation.

Other important considerations certainly exist which will emerge as applications are developed, such as cost, environmental acceptability, raw material availability, settling in low shear applications, plating of particles on one or both electrodes, sealing, effect on pumps, breakdown of particles upon shear (especially for polymeric particles), adsorption of water, contamination, *etc.* The items above, however, are those associated directly with the presence of adsorbed water.

With the recent discovery of water-free or "intrinsic" systems and subsequent confirmation of these worldwide, a number of immediate improvements were realized, many having to do specifically with elimination of the water. Some of these are listed below:

1. Thermal runaway eliminated, since no water or other adsorbent is required.

2. Low currents. Currents 10^3 to 10^6 lower as a result of dryness, *i.e.*, currents are in the range of microamps/cm^2 or nanoamps/cm^2 instead of milliamps/cm^2 for alumino-silicate particulate systems. Drastic reductions in current do not occur for the semiconductor systems.

3. Expanded temperature range. Zeolite-based fluids operate from -60C to 350C when dispersed in silicone oil.

4. Electrolysis eliminated. Electrolysis does not occur, since water is neither present nor needed.

5. Corrosion eliminated. Corrosion does not occur because water is not present.

6. Stability improved. A major cause of instability is loss of water due to operation or heating.

7. Reproducibility substantially improved. Variability of water content is a major source of difficulty in formulating water-based fluids.

8. Solid mat formation and settling substantially improved.

A very important additional consequence of these discoveries is the implication that mechanisms responsible for ER activity can be associated with the basic chemistry and physics of the particles. Once these mechanisms are understood, materials can be synthesized specifically to optimize these mechanisms and improve ER properties in an intelligent and predictable manner.

It is realized that many continue to work on "wet" systems, mostly because it is relatively easy to improve properties to a limited extent. However, we consider this a very limited and interim approach, since attempts using this method to substantially improve properties during the 1950's and 1960's resulted in virtually complete failure. Moreover, it was realized at that time that the water made the materials for the most part impractical.

An alternative approach with more potential is to try to understand the mechanisms responsible for the ER activity of the intrinsic systems and to synthesize materials to enhance these. The approach is of course considerably more expensive and time-consuming. For these reasons, in the following we will concentrate only on "dry" or intrinsic systems.

IV. Intrinsic ER Systems

Electrorheological fluids which operate without the need for adsorbed water on the particulate phase can be classified in four groups: (1) ionic conductors, (2) semiconductors, (3) polyelectrolytes and (4) solutions.

1. Ionic Conductors

The main particulate systems in this category are the aluminosilicates or zeolites. The particles are highly porous, containing numerous cavities and interconnecting channels such that around 97% of the total surface area of the particles is contained within the particles, *i.e.*, the walls of the cavities and channels (Breck 1974). The dimensions of the cavities and channels can be varied by synthetic methods and by varying the aluminum/silicon ratio. The cationic charge carriers arise from the requirement for stoichiometry when some tetravalent Si atoms are replaced by trivalent Al without disrupting the crystal structure. Thus an Al

at the center of a tetrahedron with oxygens at the vertices can bind to only three of these oxygens, leaving one unbonded with a net negative charge in the structure. This negative charge is balanced by the introduction of cations into the system. These cations however cannot fit into the close-packed crystal structure, and must therefore reside on the surfaces of the cavities and channels. Thus the cations are present as a consequence of the chemistry of the zeolites (not the presence of an electrolyte such as water), and their mobility is a result of being located on surfaces which are primarily internal and not confined within the crystal structure. Common uses of zeolites are as molecular sieves due to the ability to synthetically control channel dimensions, and as ion exchange materials due to the presence of unbonded cations which readily exchange with other cations in an aqueous suspension.

The intrinsic ER activity of these materials is associated with the presence of these cations, which presumably can move locally under the influence of an electric field. Such materials are susceptible to modification partly by varying the Si/Al ratio, by incorporating atoms other than aluminum, and by varying the types of cations. To my knowledge, no work of this nature is presently going on. These materials are readily available commercially as molecular sieves, and have been for years.

2. Semiconductors

Most of the work in this area has been performed by H. Block and associates, using various poly(acenequinone) radicals (PAQR). These materials are not available commercially, but can be prepared by the method described by Pohl and Engelhardt (1962) and Dunn *et al.* (1984). Although thermally unstable below 100C, the materials can be extensively dried azeotropically to moisture levels well below those required for wet systems. The mechanism of activity for these materials is presumably associated with the electronic charge carriers, which can move locally under the influence of an electric field. A characteristic of these materials, presumably associated with the electron-mediated ER activity, is relatively high bulk currents due to the relative ease with which electrons may jump or tunnel between particles.

Although there are many types of semiconductors which can be used to make ER materials, many are ineffective or only slightly effective when dried. The reasons for this may be related to the size of the energy band gaps, charge mobility and/or charge concentration, although I know of no studies reported in this regard.

Photoconductors represent an interesting group of semiconductors which can be used to make ER materials. In this instance, many fluids which are inactive or weakly active can show greatly enhanced ER activity when exposed to light of the proper frequency. Phenothiazine demonstrates this rather dramatically even when dried. Photo-electrorheological materials (PHERM) represent the clearest proof of the relationship between charge mobility and ER activity, since exposing such materials to light produces a tremendous increase in the number of free electronic charge carriers. A number of systems which presumably function when exposed to light, although it is unclear whether they are dry or not, are described in the patent literature (Carreira and Mihajlov 1971; Clark 1966).

3. Polyelectrolytes

Although many types of polyelectrolytes have been used in ER materials, poly(lithium methacrylate) being the best documented, most require adsorbed water to function, presumably to dissociate the cations from the macroions. However, a recent paper by Treasurer *et al.* (1991), which evaluates various polyelectrolytes commercially available as ion exchange resins, reports that many function with greatly reduced amounts of water. These were all dried at 120C under vacuum for 4 days, but retain between 0.1% and 2% water. No correlation exists between ER activity and residual water, but a strong correlation exists between the dissociation constant pK and ER activity. Another interesting observation was that some systems were ER-active at 23C and 100C, some were inactive at both temperatures, and some were inactive or weak at 23C but showed a much enhanced activity at 100C. Materials with high and low pK's demonstrated activity at both temperatures. Materials with intermediate pK's showed partial or no activity, while materials which were acidified, *i.e.*, contained no cations, showed activity at 100C but not at 23C. A common feature of these latter materials was that they all contained quaternary ammoniums, but no reason was given as to how this is related to ER activity.

The mechanism for ER activity in these dried materials is presumably due to cations which, even in the absence of an electrolyte, are able to move locally within the confines of a chain coil in the presence of an electric field, but cannot move outside the coil into the surrounding liquid (Oosawa 1971). Direct evidence for this has not been obtained, but dielectric dispersions associated with interfacial polarization have been detected and are presumably due to these locally mobile ions.

Systems containing polymers as the dispersed phase are very popular because of the softness of the particles and therefore reduced abrasion, because of their relatively low density which will aid the settling problem, and because of the vast body of knowledge on latex suspensions. Additionally, however, polymers represent an almost infinite range of systems which can be chemically customized for ER materials, once the basic chemical mechanisms associated with ER activity in "intrinsic" systems are better understood.

4. Solutions

Very recently, reports have been made of true homogenous solutions which are ER-active and presumably operate free of water. One is that of solutions of poly(γ benzyl-L-glutamate) (PBLG) in various solvents (Filisko 1992), and the other is that of poly(hexyl isocyanate) (PHIC) in various solvents (Yang and Shine 1991). Difficulties encountered with the PBLG systems include inability to get to concentrations much over 5% before gelling occurred, and the better solvents were polar, thus resulting in high currents. Nonetheless, these solutions showed very significant increases in viscosity upon application of a field. Further, their effectiveness increased significantly with temperature, the limit being the boiling point of the solvent used.

The PHIC systems on the other hand are soluble to much greater concentrations and in nonpolar solvents. The ER activities are also significantly higher. Unfortunately, the polymers become thermally unstable at temperatures around 70C.

The discovery of ER-active solutions represents another very significant advance in the field of ER, one reason being that it would solve the problem of settling, which has remained a major concern in device design. These solutions will, however, have unique disadvantages, such as greater toxicity and aggressiveness of the solvents, limited upper operating temperatures due to solvents and thermal degradation of the polymers, and generally higher costs. What is most important, however, is that this discovery emphasizes the enormous versatility in the compositions of ER-active materials, as well as the complexity in attempting to ascribe the behavior to a single mechanism.

V. Mechanical and Mathematical Models of ER Material Rheology

Presently the two most serious impediments to the intelligent and innovative design of various types of devices employing ER materials are: (1) lack of good mechanical rheological models and corresponding mathematical equations which can adequately simulate, even qualitatively, the behavior of ER materials; and (2) lack of quality engineering design data. The latter point is relative, since, as mentioned previously, the range of possible compositions of the materials is virtually infinite, and they will ultimately be customized to optimize desirable properties and minimize undesirable properties for specific purposes. There are sufficient data in the literature to allow reasonable values for material properties to be estimated and inserted into appropriate equations. However, until very recently, an adequate rheological model was nonexistent, and even now models are mainly qualitative.

VI. Phenomenological Rheological Behavior of ER Materials

The behavior of these materials under the influence of an electric field has been most commonly characterized in terms of their properties during steady flow. They are described as Bingham fluids (Klass and Martinek 1967a,b; Conrad *et al.* 1989; Schulman *et al.* 1971), in which the flow or shear stress-shear rate behavior is qualitatively illustrated in Figure 1.

These materials are usually fluids (as opposed to greases or gels) under zero-field conditions, but under similar flow conditions the shear stress increases with increasing electric field. The dependence is commonly observed as being proportional to the field squared (Winslow 1949; Klass and Martinek 1967a,b; Schulman 1971; Saito and Kato 1957), but many other types of behavior are observed (Sugimoto 1977; Block *et al.* 1990). According to Bingham behavior, the materials are fluids under zero field, but under a non-zero field they are solids up to a certain critical shear stress σ_c (also called the "yield stress σ_y") and liquids at stresses above σ_c. This model, although adequate in steady flow situations where transient or "start-up" effects are neglected or unimportant, is completely wrong in situations where start-up behavior is important, as well as under dynamic loading such as occurs in rapid or impact stresses or in damping applications. In these situations, the Bingham model completely overlooks the properties of the materials at stresses below σ_c (Sprecher *et al.* 1987). A more complete description of the behavior of these materials may be illustrated by a plot of stress *vs.* strain as illustrated in Figure 2 (Gamota and Filisko 1991a).

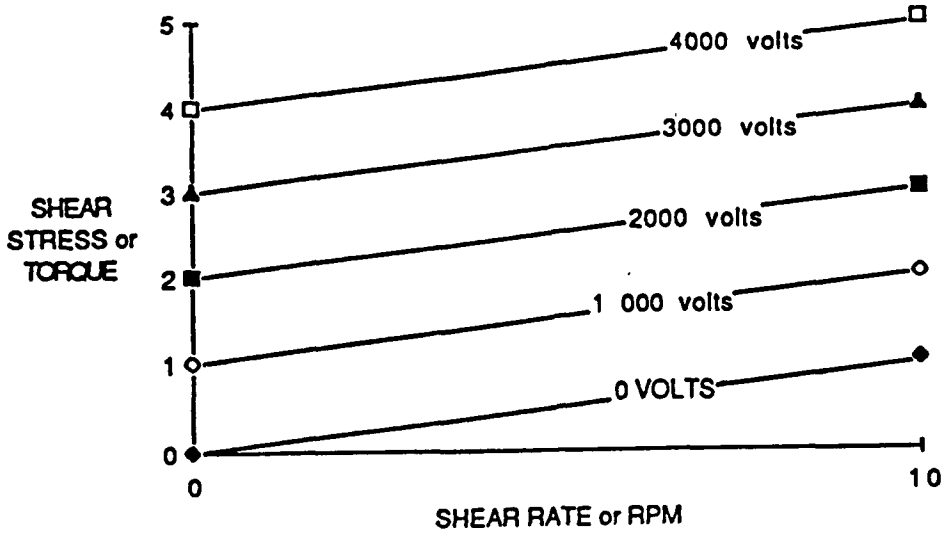

Fig. 1. Illustration of shear stress vs. shear rate for an ER material under constant shear rate at various electric field strengths. This is characteristic Bingham Body behavior.

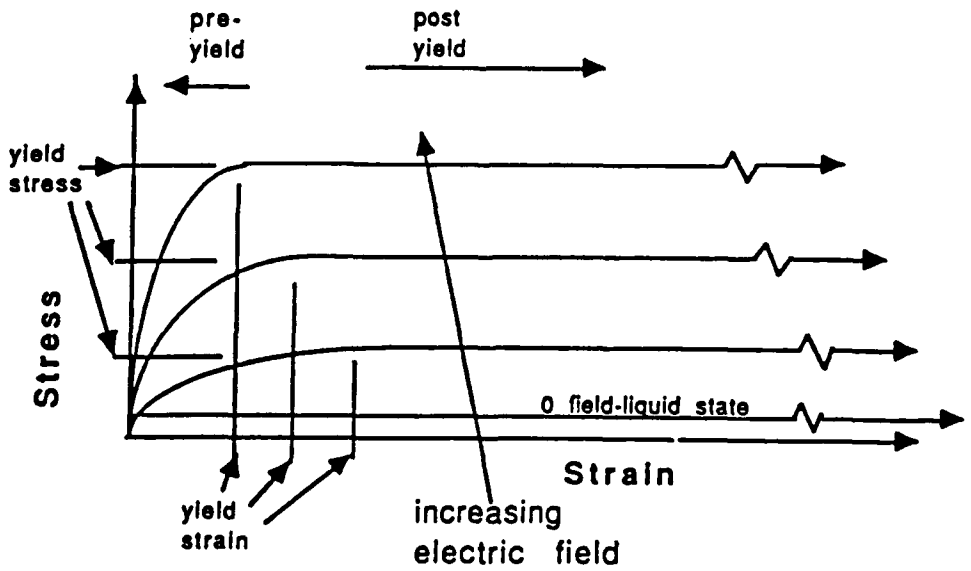

Fig. 2. Illustration of shear stress vs. shear strain properties of a typical ER material under zero electric field (where it is in the liquid state) and under increasing electric field strengths.

In this case the materials can be described as viscoelastic solids below a critical yield stress and critical yield strain γ_c and as viscous liquids for stresses at or above σ_c and strains greater than γ_c. When characterized in this way, the materials may more correctly be described in their overall rheology as viscoelastic, perfectly plastic materials in which σ_c and γ_c are strong functions of electric field. The yield stress σ_c is highly variable and can depend strongly upon numerous factors, including the ER fluid composition and the materials used. What is more important is that the pre-yield behavior of these materials with regard to energy dissipation is completely different than in steady flow.

In the simplest case, pre-yield behavior can be characterized by a modulus and a yield stress σ_c, whereas the liquid state or post-yield behavior is characterized by an apparent viscosity η_a. More correctly, the pre-yield state, being truly viscoelastic, must be characterized by time constants and damping factors which depend on the field in complex ways.

Post-yield behavior (materials under steady flow)

In steady-state flow at shear rate $\dot{\gamma}$, the fluids are characterized by an apparent viscosity η_a, and the above parameters are related by

$$\eta_a = [\sigma_c(E) + \sigma_o(\dot{\gamma})]/\dot{\gamma}_a \tag{1}$$

where σ_c is a function of the electric field E and σ_o for a given fluid is a function only of the shear rate and temperature.

Two common criteria for evaluating ER materials in flow include the magnitude to which the viscosity can be increased and by what factor it can be increased. The second question is more important, since it relates to how effective an electric field is on the rheology of the material. Regarding the latter point, if we define a fluid effectiveness factor K, then

$$K = \eta_a(E)/\eta_o = [(\sigma_o+\sigma_c)/\dot{\gamma}]\,/(\sigma_o/\dot{\gamma}) = 1 + \sigma_c/\sigma_o \ . \tag{2}$$

Now σ_c is essentially a constant at a certain field, but σ_o increases continuously with increasing shear rate. Therefore, this suggests that K decreases toward 1 as shear rate increases. This is an important first-order relationship for understanding the characteristics of the materials under flow, since it implies making a more effective fluid requires making σ_c as large as possible and keeping σ_o as small as possible. Making σ_c large is non-trivial, as supported by the complete failure of numerous developers to increase the strengths by haphazardly adding various substances to the fluids. The most judicious approach, we feel, involves developing a basic understanding of chemical and physical parameters controlling the phenomenon.

The second parameter σ_o is a function of fluid composition and flow conditions. Thus fluids can be mixed which are very thin, *i.e.*, of low viscosity, or they can be made very thick by using higher solids concentrations and/or high-viscosity dispersing liquids. However, although the maximum shear stresses can be increased by making the zero-field viscosities thicker, the K-factor can become so small that the field-induced change in σ_c will become insignificant.

Normally σ_c is a much weaker function of concentration than σ_o; at best σ_c is a linear function within most common concentration ranges (Deinega and Vinogradov 1984). However, σ_o is a much stronger function of concentration (Frisch and Simha 1956). Therefore, understanding the basic parameters (chemical, physical and rheological) which control the magnitude of σ_c is essential in regard to electrically controlling the properties of these materials.

Pre-yield behavior (materials under dynamic loading)

In the previous discussion we have been considering only steady-state flow in which the transient effect of the pre-yield region was of no concern. This pre-yield region can be effectively studied under oscillatory stresses such as may occur in vibration damping (Gamota and Filisko 1991a,b; Stanway *et al.* 1989). Under these conditions, the amplitude of the stress response is a strong function of the applied field, but reaches a limiting stress beyond which the stress response no longer follows the shape of the strain function, but becomes cut off or truncated (Gamota and Filisko 1991a,b; Stanway *et al.* 1989) as shown in Figure 3 for an actual set of data.

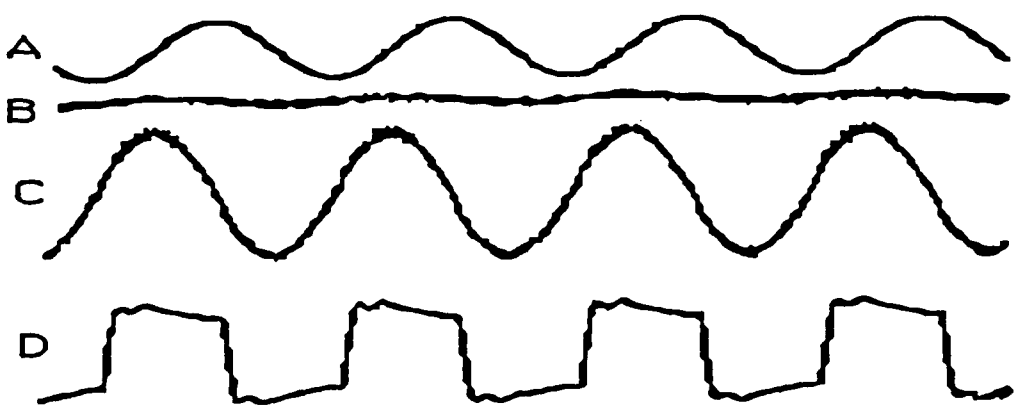

Figure 3. Stress response to a constant strain amplitude at various values of applied electric field. Curve A is the applied strain, B the shear stress with E = 0, C the shear stress with E = 1 kV/mm, D the shear stress with E = 2.5 kV/mm. (Note that curve D is at 1/4 the scale of the other curves).

The value of the stress at the onset of truncation is a function of E and is also related to σ_c. Rheologically, the appearance of the cut-off is an indication that the material is beginning to flow. In other words, during an oscillatory stress, the material will deform as a solid over part of the cycle and as a liquid over the other part. Another way of observing the effect of the field under cyclic loadings is to observe hysteresis loops for these materials at constant strain frequency and amplitude, but varying the applied E field. A sequence of such loops is shown in Figure 4.

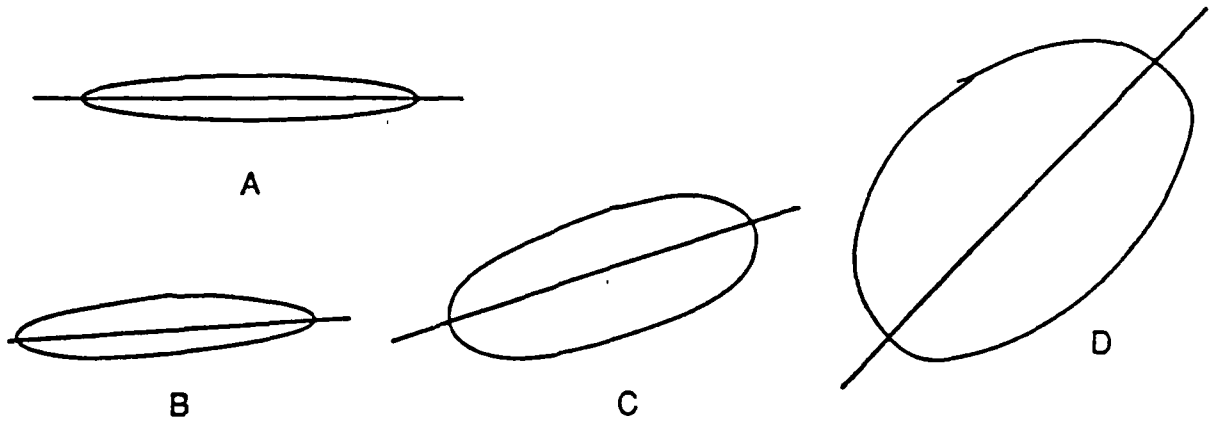

Figure 4. Graph of hysteresis loops of ER materials where A is under 0 field and B, C and D are under increasingly greater fields. A is a hysteresis loop for purely viscous behavior, while B, C and D represent hysteresis loops indicating viscoelastic behavior.

Notice that, as the E field increases, both the area within the loops and the angle the major axis makes with the abscissa increase. This is indicative of linear viscoelastic behavior (if the loops are elliptical) where the viscous component is determined by the area within the loop, and the elastic component is determined by the inclination of the major axis. Both are strongly field-dependent. If the amplitude of the imposed impulse is large enough, the deformation may begin to activate the liquid (or flow) regime, in which case the loops would deviate from ellipticity. Actual data illustrating this are shown in Figure 5.

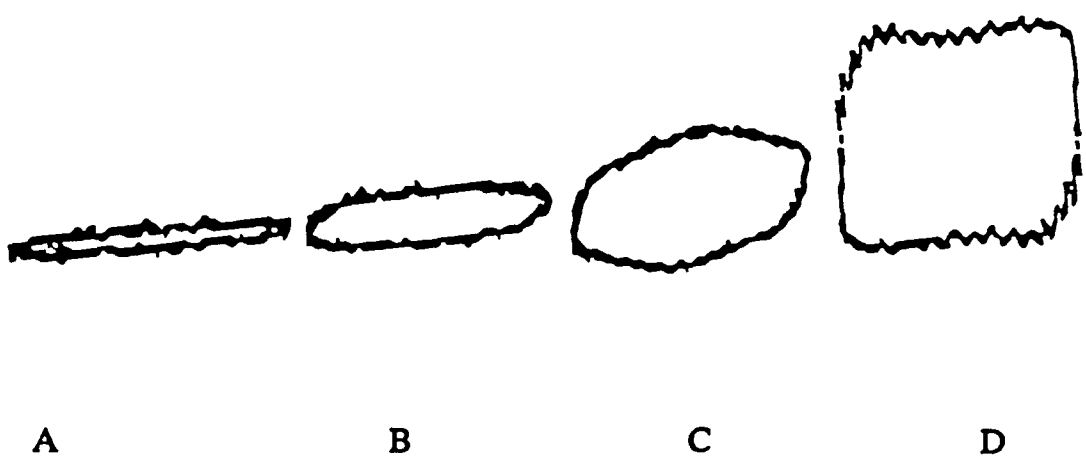

Fig. 5. Actual hysteresis loops recorded for an ER material under various electric fields. A: E = 0; B: E = 1 kV/mm; C: E = 2 kV/mm; D: E = 3 kV/mm.

Mechanical models

In one case a model by Bullough and Foxon (1978) is proposed to simulate only damping, and then only linear viscoelastic damping so that it can be treated mathematically. This model is unrealistic in regard to three obvious omissions: (1) it incorporates no flow element; (2) it incorporates no Coulomb damping term; and (3) it is completely recoverable. It was not, however, intended to simulate the behavior of ER materials. The only other model, by Shulman *et al.* (87), suffers from the same problems as that of Bullough and Foxon, but again it was intended only to simulate electric field control of damping.

A current model proposed by Gamota and Filisko (1991a,b), shown in Figure 6, correlates qualitatively with the observed behavior of ER materials but has yet to be tested quantitatively.

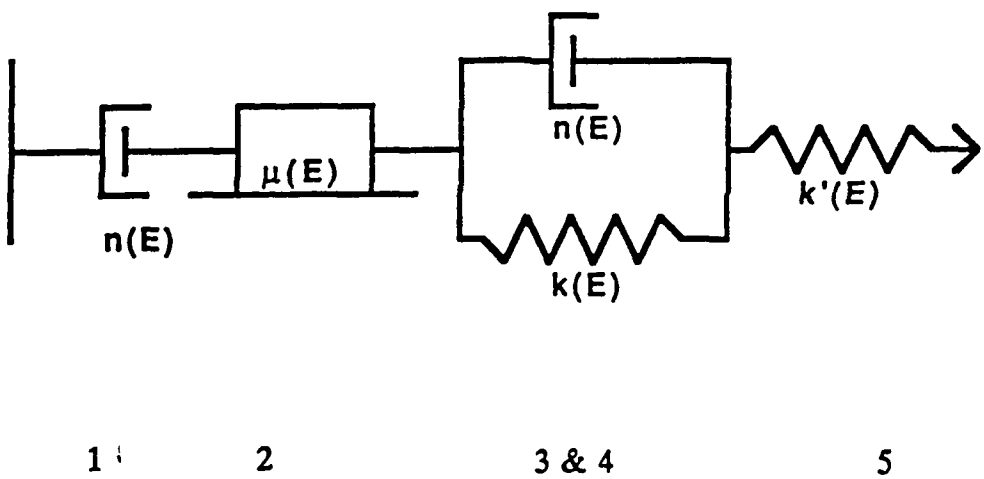

Figure 6. Mechanical model simulating behavior of an ER material.

Element 1 is a dashpot which is essentially field-independent but governs the slope of the shear stress *vs.* shear rate data, *i.e.*, the slope of the data in Figure 1. Element 2 is a Coulomb friction element which is strongly field-dependent and governs the magnitude of the ER response under steady shear, *i.e.*, the yield stresses or σ_c. Elements 3 and 4 combined in parallel form a Voigt element. Both elements are strongly field-dependent and govern the transient response and damping behavior under impact or vibration, *i.e.*, both the angle of inclination and areas within the ellipses in Figure 4. Under low amplitude it may be only this portion of the model which deforms. Element 5 is a spring which is strongly field-dependent and, in conjunction with the Voigt element, governs the dynamic response.

Notice that under constant strain rate, elements 3, 4 and 5 rapidly reach an equilibrium extension and contribute nothing in steady state flow. Element 1 simply determines the slope of the stress-strain rate curve, which is essentially field-independent, and element 2 which is field-dependent determines the yield stress. However, under dynamic loading at low amplitudes, the block (friction element) may not even move, and then only elements 3, 4 and 5 determine the material characteristics. In more complex loading situations, all elements may be contributing different amounts to the material's response at different times.

Constitutive equations of ER materials

Constitutive equations appearing in the ER literature have usually incorporated two restrictions. First, attention has been confined to one-dimensional shearing flows, which is the situation assumed to occur in most experimental configurations and devices. The constitutive equation relates only one shear stress and one shear rate, and the electric field vector is perpendicular to the velocity vector. Second, the material is assumed to be rigid until the stress reaches a certain value, after which the stress is determined by the instantaneous values of the shear rate and the electric field. In other words, the material is regarded as an electric field-dependent Bingham fluid. This relation has typically been assumed to be of the form shown in Figure 7.

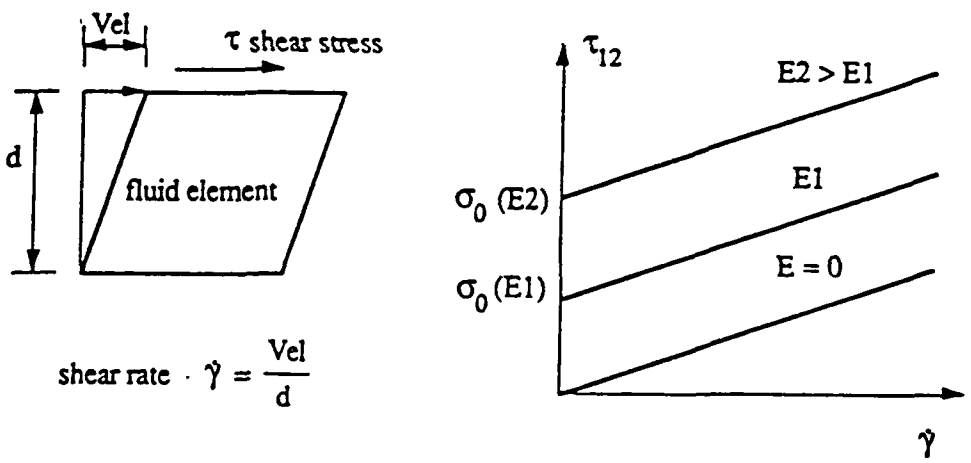

Figure 7. A form of the electric field-dependent fluid model.

A constitutive equation which extends the earlier versions to three-dimensional flows has recently been developed by Rajagopal and Winoman (1991). It is assumed that the fluid is incompressible, and that the matrix of stress components is determined by the instantaneous values of the matrix of deformation rate components and the electric field vector. This latter

assumption introduces the important experimental result that the mechanical behavior responds instantaneously to changes in the electric field.

Figure 8 shows the predictions of this constitutive equation for steady shear flows in which the electric field is normal to the direction of flow. In this figure, various scalar parameters appear from the mathematical form of the constitutive equation and, of course, must be quantified through experiment. The shear stress is related to the shear rate by a viscosity function which can depend on fluid properties and on the magnitude of the electric field. Clearly, this formulation serves to generalize the one-dimensional relation proposed by earlier workers.

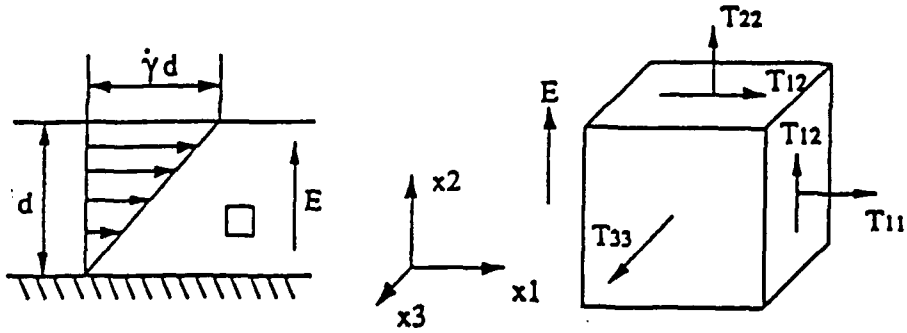

	Incompress -ibility	Tension along direct-ion of electric field	Non-Newtonian effect	Coupling between shear flow and electric field	Field-dependent viscosity
T_{11}	α_1		$(\alpha_4\dot{\gamma}^2)/4$		
T_{22}	α_1	a_2E^2	$(\alpha_4\dot{\gamma}^2)/4$	$(\alpha_6\dot{\gamma}E^2)/2$	
T_{33}	α_1				
T_{12}					$\frac{1}{2}(\alpha_3+\alpha_5E^2)\dot{\gamma}^2$

Figure 8. Physical interpretation of terms for shear flow.

In addition, because the formulation is three-dimensional, the model predicts new physical effects due to the presence of the electric field. The second term introduces a normal stress along the direction of the electric field. It suggests that, unlike Newtonian fluids, ER materials can sustain a normal stress in the absence of shearing. Experiments will determine whether such normal stresses are typically tensile or compressive in orientation.

The most interesting result is the last term, which introduces a second contribution to the normal stress - one which arises specifically due to the interaction of the electric field and the shear flow. If either the shear rate or the electric field becomes zero, this normal stress vanishes. It is thus strictly an electrorheological effect. These new normal stress effects can

have interesting implications concerning the flow pattern in a device, the stability of the flow due to disturbances, and container design.

Beyond the matter of constitutive equations, the ability to quantitatively predict the performance of specific systems requires numerical computations using the techniques of computational fluid dynamics (CFD). These techniques constitute a relatively mature subfield of fluid mechanics. In the case of conventional hydraulic control systems, most of the components or subsystems have been reduced to lumped models whose descriptive functions can be approximated by common algebraic forms. In the case of ER devices, where the flow field will necessarily entail discontinuous behavior due to the Bingham plug anomaly, CFD methods are required if continuous control behavior is to be analyzed. Nevertheless, the literature contains very few examples of the application of CFD methods to ER devices (see, for example, Wang *et al.* (1989); Lou *et al.* (1991a)), and these analyses have adopted the Bingham plastic model as a basic simplifying assumption. As more sophisticated constitutive models for ER fluids are developed, their application in CFD-based simulations must follow.

References

Block, H. and J. P. Kelly, Proc. IEE Colloq. **14:1** (1985).

Block, H. and J. P. Kelly, "Electrorheology", *J. Phys. D: Appl. Phys.* **21**, 1661-1677 (1988).

Block, H., J. P. Kelly, A. Qin and T. Watson, " Materials and mechanisms in electrorheology", *Langmuir* **6**(1), 6-14 (1990).

Breck, S. W., *Zeolite Molecular Sieves*, John Wiley & Sons, Inc., New York (1974).

Brooks, D., J. Goodwin, C. Hjelm, L. Marshall and C. Zukowski, "Viscoelastic studies on an electrorheological fluid." *Colloids Surf.* **18**, 293 (1986).

Bullough, W. A. and M. B. Foxon, "A proportionate Coulomb and viscously damped isolation system." *J. Sound & Vib.* **56**(1), 35-44 (1978).

Carreira, L. M. and V .S Mihajlov, " Recording apparatus and methods employing photoelectroviscous ink", U.S.Patent No. 3553708, January 5, 1971.

Clark, H.E., "Electroviscous Recording." US Patent No. 3270637. Sept. 6, 1966.

Conrad, H., M. Fisher, A. F. Sprecher (1989). "Characterization of the structure of a model electrorheological fluid employing stereology." Electrorheological Fluids-Proceedings of the Second International Conference on ER Fluids, Raleigh, North Carolina, USA, August 7-9, 1990, Technomic Pub. Co., Inc.

Conway, B. E. and A. Dobry-Duclaux, "Viscosity of suspensions of electrically charged particles and solutions of polymeric electrolytes", in RHEOLOGY: THEORY AND APPLICATIONS, Vol III, ed. F. R. Eirich, Academic Press, NY (1960).

Davies, J. T. and E. K. Rideal, Interfacial Phenomena, Chap. 2, Academic Press, NY (1961).

Deinega, Y. F. and G. V . Vinogradov, "Electric fields in the rheology of disperse systems," *Rheol. Acta* 23, 636-651 (1984).

Denkewicz, R. P., " Zeolite science: an overview", *J. Matls. Ed.* 9(15), 519-585 (1987).

Dunn, L. C., W. T. Ford, N. Hilal, P. S. Vyayakumar and H. A. Pohl, " Synthesis and conductivity of polyacene quinone radical polymers", *J. Polym. Sci: Polym. Phys.*, 22, 2243-2260 (1984).

Filisko, F. E. and W. E. Armstrong, "Electric field dependent fluids", U.S.Pat. No. 4744914, May 17, 1988.

Filisko, F. E. and W. E. Armstrong, "Electric field dependent fluids-CIP", U.S.Pat. No.4879056, November 7, 1989.

Filisko, F. E. and L. H. Radzilowski, " Intrinsic mechanism for activity of alumino-silicate based electrorheological fluids", *J. Rheol.* 34(4), 539-552 (1990).

Frisch, H. L. and R. Simha, " The viscosity of colloidal suspensions and macromolecular solutions" in Rheology: Theory and Applications, Vol.1, ed. F.R.Eirich, Chap.14, Academic Press, NY (1956).

Gamota, D. and F. E. Filisko, " Dynamic mechanical studies of electrorheological materials: Moderate frequencies", *J. Rheol.* 35(3), 399 (1991).

Gamota, D. and F. E. Filisko, "Dynamic mechanical studies of electrorheological materials: high frequencies", *J. Rheol.* 35(7) (1991b).

Hedvig, P., Dielectric Spectroscopy of Polymers, John Wiley & Sons, Inc., New York, 282-296 (1977).

Kitahara, A., "Nonaqueous systems", in Electrical Phenomena at Interfaces: Fundamentals, Measurements and Applications, eds. A. Kitahara and A. Watanabe, pp. 119-143, Marcel Dekker, Inc., New York (1984).

Klass, D. L. and T. W. Martinek, "Electroviscous fluids I. Rheological properties," *J. Appl. Phys.* 38(1), 67-74 (1967a).

Klass, D. L. and T. W. Martinek, "Electroviscous fluids II: Electrical properties, "*J. Appl. Phys.* 38(1), 75-80 (1967b).

Lou, Z., R. D. Ervin and F. E. Filisko, "The dynamics of a viscometer during the characterization of an electrorheological fluid under an a.c. electric excitation." The Society of Rheology 63rd Annual Meeting, Rochester, New York (October 20-24, 1991a).

Lyklema, J., "Interfacial chemistry of disperse systems", *J. Matls. Ed.* 7(2), 211-139 (1985).

Maxwell, J. C., Electricity and Magnetism, Vol.1. 452, Clarendon Press, Oxford (1892).

Oosawa, F., Polyelectrolytes, Marcel Dekker, Inc., New York (1971).

Pohl, H. A., "The motion and precipitation of suspensions in divergent electric fields", *J. Appl, Phys.* 22(7), 869-871 (1951).

Pohl, H. A. and Engelhardt, " Synthesis and characterization of some highly conjugated semiconducting polymers", *J. Phys. Chem.* 66, 2085 (1962).

Rajagopal, K. R. and A. S. Wineman, "Flow of electrorheological materials", Acta Mechanica (accepted for publication 1991).

Saito, N. and T. Kato, "Viscoelasticity and complex dielectric constant in the presence of an electric field and shear laminar flow in macromolecular solutions", *J. Phys. Soc. Japan* 12(12), 1393-1397 (1957).

Shulman, Z. P., Y. F. Deinega, R. G. Gorodkin, and A. D. Matsepuro, "Some aspects of electrorheology," *Prog. in Heat & Mass Transf.* 4, 109-125 (1971).

Shulman, Z. P., B. M. Khusid, E. V. Korobko and E. P. Khizhinsky, "Damping of mechanical-system oscillations by a non-Newtonian fluid with electric-field dependent parameters." *J. Non-Newtonian Fluid Mechanics* 25, 329-346 (1987).

Sprecher, A. F., J. D. Carlson and H. Conrad, " Electrorheology at small strains and strain rates of suspensions of silica particles in silicone oil", *Matl. Sci. and Eng.* 95, 187-197 (1987).

Stanway, R., J. Sproston and R. Firoozian, "Identification of damping law on an electrorheological fluid: a sequential fitting approach", *J. Dynamic Systems: Measurement and Control* 111, 91-95 (1989).

Sugimoto, N., " Winslow effect in ion-exchange resin dispersions", *Bull. Jap. Soc. Mech. Eng.* 20(149), 1476 (1977).

Treasurer, U., L. H. Radzilowski and F. E. Filisko, "Polyelectrolytes as inclusions in water free electrorheological materials: chemical characteristics," *J. Rheol.* 35(4) (1991).

Uejima, H., "Dielectric mechanism and rheological properties of electro-fluids," Jap. *J. Appl. Phys.* 11(3), 319-326 (1972).

Voet, A., "Dielectrics and rheology of non-aqueous dispersions," *J. Phys. Colloid Chem.*, 51, 1037-1063 (1947).

Von Hippel, A. R., Dielectric and Waves, pp. 228-234, John Wiley & Sons, Inc., New York (1954).

Wang, K. C., R. McLay and G. F. Carey, "ER fluid modelling," Electrorheological Fluids-Proceedings of the Second International Conference on ER Fluids (pub. in 1990), Raleigh, North Carolina, USA, August 7-9, 1989, Technomic Pub. Co., Inc.

Winslow, W. M. (1949) "Induced fibration of suspensions", J. Appl. Phys. 20:1137-1140.

Yang, I-K and A. D. Shine (1991), "Electrorheology of poly(n-hexyl isocyanate) solutions", presented at Soc. of Rheology meeting, Oct. 20-24, 1991, Rochester NY.

5.10 Potential Application of Liquid Crystals as ER Fluids

Kurt Wissbrun

I. Background

Liquid crystals are fluids that exhibit orientational order over distances many times longer than the dimensions of the molecules of which they are composed. (For reviews of various aspects of liquid crystals, see *e.g.* deGennes 1974; Porter and Johnson 1974; Wissbrun 1981, and numerous references in these.) The origin of the order is that the molecules have a shape with a preferred direction, such as a rod or a disk, and sufficient rigidity of the bonds composing the structure to maintain that shape. If the intermolecular forces are also appropriate, there may be a range of temperature and/or concentration in which free energy is minimized by packing the molecules in an orientationally ordered pattern, losing entropy but reducing enthalpy. At lower temperatures, the positions of the molecules may also be correlated over long distances, and this results in transformation to the solid state. At higher temperatures, on the other hand, the isotropic fluid state, in which there is no long range orientational order, is preferred.

The long-range order of a liquid crystal, whose constituent molecules are intrinsically anisotropic, results in a fluid whose properties are anisotropic. These properties include dielectric constant and magnetic susceptibility, and mechanical properties such as the viscosity. This anisotropy is responsible for the consideration of liquid crystals as potentially interesting materials for application in ER fluids.

II. Dependence of Viscosity upon Orientation

The balance between intermolecular forces and thermal energy determines whether or not the fluid has a preferred orientation, but does not specify how that orientation is directed. The preferred orientation vector, the "director", is the result of external forces of various kinds, including electric and magnetic fields, surface forces, and mechanical stresses due to flow.

The classic experimental demonstration of anisotropy of the viscosity was done by Miesowicz (1935, 1946), who oriented *p*-azoxyanisole along three perpendicular directions by application of a strong magnetic field, and then determined the viscosity by applying a shear not strong enough to reorient the orientation direction. The viscosity was nearly four times as high when the director was parallel to the velocity gradient direction compared to orientation in the flow direction.

A strong flow field will, however, cause the director to reorient. This effect was illustrated nicely by Fisher and Fredrickson (1969), who, by appropriate treatment of the surface, oriented the same fluid with the director perpendicular to the wall of a capillary tube. The

flow rate of the fluid was measured as a function of the pressure applied to capillaries of various diameters – a classic viscometric measurement. Their result was that the apparent viscosity decreased with increasing flow rate in a manner that depended upon capillary diameter. Fisher and Fredrickson interpreted their results as the average resistance to flow of a strongly adsorbed high viscosity layer and of a low viscosity core whose diameter depended upon the applied stress. However, it was shown very quickly (Tseng 1976) that their results were in fact explicable by the then recently developed continuum theory of Leslie and Ericksen (Leslie 1979; de Gennes 1974).

III. Effect of Electric Fields

In principle it should be possible to align liquid crystals by application of electric fields just as with magnetic fields; in practice the phenomena occurring are much more complex (see, *e.g.*, de Gennes 1974, pp. 95ff and pp. 183ff; Krigbaum 1980). Basically, electro-hydrodynamic instabilities lead to complex orientation patterns ("Williams domains") even at relatively low fields, on the order of hundreds of volts/millimeter. For low-molecular-weight liquid crystals such as *p*-azoxyanisole, the time required for the formation of domains may be on the order of 0.01 to 0.1 seconds; for polymeric liquid crystals the time goes up to hours, scaling with the much higher viscosity of the polymers.

Complex orientation domains are also formed, even in initially aligned liquid crystals, by flow fields. The effect of the domain texture is to cause a shear rate dependence of viscosity at low shear rates, giving a flow curve similar in shape to that of a fluid with a yield stress (Marrucci 1991). By analogy it is likely that the effect of formation of the Williams domains is also to cause an increase of low-shear viscosity. And, of course, such an effect is phenomenologically what occurs with ER fluids. The data reported by Filisko (1991) on solutions of poly(γ-benzyl-*L*-glutamate) solutions are consistent with this hypothesis, although it is not clear from the reported data that his solutions were in the liquid-crystalline state.

The clearest demonstration of the feasibility of a practical ER effect from a liquid crystal system was achieved very recently by Yang *et al.* (1992), working with p-xylene solutions of poly(n-hexyl isocyanate) (PHIC). They removed the domain structure and pre-oriented their solutions with an alternating current (AC) electric field. Measurements of the viscosity were made at various shear rates with a range of applied DC fields, which were sufficiently high to maintain the monodomain nematic order during flow. An order-of-magnitude increase of the viscosity was observed with fields of the order of 1 MV/m (1 kV/mm). Their observations were also consistent with the Leslie viscosity coefficients of the system.

These results are most encouraging and deserve to be followed up. Certain questions must still be addressed before the practical utility of these observations can be assessed – questions about matters such as (1) the effects of hydrodynamic instability, (2) the formation of domain texture at higher shear rates, and (3) the time constants of those processes.

IV. Potential Advantages and Disadvantages of Liquid Crystals as ER Fluids

The obvious advantage offered over the conventional suspension systems by use of a homogeneous liquid crystal is the total lack of any problems associated with settling of the disperse phase, because there is none. Also, there is no need to have any water present as an activator, with all of the stability problems caused by the water.

A probable disadvantage is the relatively limited temperature range in which the liquid-crystalline phase generally occurs. Use of "lyotropic" liquid-crystal polymer solutions may be advantageous in that the liquid-crystal temperature range can be much larger. Polymeric liquid crystals also offer the potential advantages of much higher viscosity anisotropy, and therefore of ER effect, compared to low molecular weight liquid crystals. On the other hand, the time constant for domain formation by application of the electric field is also much larger (Krigbaum 1980).

The electrical conductivity of the liquid crystals associated with the electrohydrodynamic instability may also be a problem, both because of power consumption and because this characteristic may change with time, leading to unstable ER response. Liquid crystals may perhaps be more suitable for magneto-rheological fluid application than for ER fluids. Particularly intriguing in this regard is the idea that doping a liquid crystal with ferromagnetic particles makes it possible to achieve high orientation and/or complex domain formation by application of magnetic fields as small as a few Gauss or less (Chen 1983).

There is also the possibility of achieving a synergistic effect with conventional ER fluids by using liquid crystals as the matrix fluid. The high cost and the polar nature of most liquid crystals argue against the feasibility of this approach.

V. Research Needs

The first need is to acquire some systematic data on the ER response and its time constant for various types of liquid crystals, both small molecule and polymeric. Also, the fundamental parameters that determine the response should be measured or be available. These include the Leslie viscosity coefficients and the Frank elastic constants, which characterize the anisotropy of the mechanical properties, and the principal values of the anisotropic dielectric constant. These data should make it possible to correlate ER fluid parameters with liquid-crystal characteristics. Given this correlation, it will be possible to estimate the magnitudes of ER response and time constants achievable, based on literature information on the range of liquid-crystal parameters .

The second step would be to discuss this information with ER device design engineers, in order to ascertain the potential usefulness of fluids with such characteristics in devices of various kinds. Validation of the predicted response in prototype devices would then follow. It would also seem advisable to explore the possibilities of synergistic effects by using liquid crystals as ER matrix fluids, or by amplification of magneto-rheological response by dispersion of ferromagnetics in liquid crystals.

Finally, it should perhaps be noted that only the possible use of the simplest types (see de Gennes 1974) of liquid crystals (nematic and cholesteric) have ben discussed. It has been implicitly assumed that the high viscosity and long response time of the more complex smectic forms make them unsuitable for applications of interest. There are micelle-forming systems which are known to exhibit shear-induced transitions of structure and viscosity and which are electrically anisotropic (Hoffmann 1990). Conceivably, it may be possible to find such dispersions of non-ionic surfactants in insulating solvents, which might exhibit interesting ER effects. To our knowledge there has not been any publication to this effect.

References

Chen, S. H. and N. M. Amer, *Phys. Rev. Letters* 51, 2298-3301 (1983).

deGennes, P. G., "The Physics of Liquid Crystals", Clarendon Press, Oxford (1974).

Filisko, F. E., "Recent Breakthroughs in Electro-Rheological Materials", Status Report for ER Fluids Assessment (December 16-17, 1991).

Fisher, J. and A. G. Fredrickson, *Mol. Cryst. Liq. Cryst.* 8, 267 (1969).

Hoffmann, H., S. Hofmann, A. Rauscher and J. Kalus, "Shear Induced Transitions in Micellar Solutions", presented at ECIS Conference, Catantarro, Italy, Sept. 1990; to be published in Prog. in Coll. Polymer Sci.

Krigbaum, W. R., H. J. Lader and A. Ciferri, *Macromolecules* 13, 554 (1980a).

Krigbaum, W. R. and H. J. Lader, *Mol. Cryst. Liq. Cryst.* 62, 87 (1980b).

Leslie, F. M., "Theory of Flow Phenomena in Liquid Crystals", in "Advances in Liquid Crystals", Vol. 4, G. H. Brown, ed., Academic Press, New York (1979).

Marrucci, G., *Macromolecules* 24, 4176 (1991).

Miesowicz, M., *Nature* 17, 261 (1935); 158, 27 (1946).

Porter, R. S. and J. F. Johnson, "Rheology", Vol. 4, F. R. Eirich, ed., Academic Press, New York (1967).

Tseng, H. C., D. L. Silver and B. A. Finlayson, *Phys. Fluids* 15, 1213 (1976).

Wissbrun, K. F., *J. Rheology* 25, 619 (1981).

Yang, I.-K. and A. D. Shine, A. D, *J. Rheology* 36, 1079-1104 (1992).

5.11 Steric Forces

J.W. Goodwin

I. Introduction

At high electric field strengths the attractive forces between particles in an ER fluid arising from polarization forces can be large, as can be deduced from the large changes in macroscopic properties. On removal of the field, however, the particles must come apart easily. Van der Waals forces between particles produce an attraction, and electrostatic forces give rise to a repulsion. At the low dielectric constants of the base fluids, and at the surface potentials of the particles usually extant in ER fluids, electrostatics would be insufficient to provide stabilization (*i.e.*, a system of particles where repulsive forces dominate at all interparticle distances that nearest neighbors will probe).

The presence of strongly bound but soluble moieties at the surface of the particles adds another contribution known as steric stabilization. If two such coated particles come together, either during a Brownian collision or under the influence of dipolar forces, their bound layers are forced to interact and interpenetrate. In an oleophilic medium, the major effect is to restrict conformational degrees of freedom of the bound molecules in this region of overlap. The result is a rapidly increasing excess osmotic pressure in this overlap region, which acts as a repulsive force pushing the particles apart. This force increases monotonically as the extent of the overlap is increased, and thereby gives rise to an extremely robust stabilization system.

II. Requirements for ER Fluids

To design an effective ER fluid, the particles should be produced so that dipolar forces are large. For a given extent of polarization, the particle dipoles are maximized if the charge separation is large; *i.e.*, if the particle radius is large. In addition, alignment of the dipoles is important. The maximum force occurs with the dipoles aligned with the field. However, the force is also a strong function of separation. This is illustrated with the expression given by Marshall *et al.* (Marshall, 1989) for the maximum force between two conducting particles in an external field:

$$F_{max} = 12\pi\epsilon_s\epsilon_0(a\beta E)^2[\frac{a}{r}]^4 \qquad (1)$$

where a is the particle radius and r is the center-to-center separation of two particles. β is a function of the dielectric constants ϵ_p and ϵ_s of the particles and the medium, respectively. Letting ϵ_r be the ratio ϵ_p/ϵ_s,

$$\beta = \frac{\epsilon_r - 1}{\epsilon_r + 2} \tag{2}$$

This indicates that particles of large radius are preferred. In addition, large particles give rise to strong van der Waals forces, as these take the form

$$F_{vdW} = \frac{aA}{12(r-a)} \tag{3}$$

Note also that the separation of the particles should be minimized in order to maximize both polarization and van der Waals forces, and that the polarization forces are inversely proportional to r^4. Hence if small particles are used, the minimum separation should be reduced *at least* in proportion to the radius; if small particles are to be used, the dimensions of the stabilizing moieties rapidly become very small.

An additional role for the steric barrier is to provide an insulating layer between conducting particles in order to maintain low power consumption. This can produce constraints on the lower limit of the barrier thickness.

III. The Anchoring Mechanism

There are two anchoring mechanisms conventionally used with steric stabilizers. In the first mechanism, physical adsorption of part or parts of the stabilizing molecule is used. High adsorption densities are required for several reasons:

a. A dense barrier maximizes the steric repulsion arising from interactions between particles.

b. Migration away from the contact zone is minimized.

c. Desorption is minimized, as maximal coverage demands a high equilibrium concentration in solution.

d. High equilibrium concentrations provide the best protection against *solvent shock* on dilution.

e. The insulative character is maximized.

The use of block copolymers can provide a high adsorption energy for the anchors, and a multi-block anchoring mechanism increases the time scales of desorption, since all blocks have to become detached simultaneously for desorption to occur.

Secondly, attachment through chemical bonding provides a strong anchor. Chemical grafting through an esterification reaction is possible for a wide range of surfaces. Bonding to

polymeric particles is straightforward, in that acid groups polymerized into the particle are available (Barrett 1975). Oleophilic species built into the polymer chain can also provide a satisfactory barrier. Oxides can be reacted with alcohols to give a chemical graft. However, use of water as a subsequent dopant then produces some hydrolysis, and grafting efficiency is lost.

IV. The Soluble Moieties

The parts of the stabilizer that extend into the continuous phase provide the barrier to coagulation of the particles. Maximal extension occurs for terminally anchored chains. The tails of multiply anchored polymers also extend further into the solution than the rest of the chains, and so interact first. The maximum extension d is of the order of the root-mean-square dimension of the chain.

To maximize the ER effect, short densely packed chains are required. They allow surfaces to approach closely and maximize the dipolar attraction; they give rapidly rising repulsive potentials at closer distances; and they reduce the possibility of conduction paths. Short branched species will tend to produce relatively rigid thin barriers which should have the correct properties at high surface densities. A stabilizing moeity about every 1 nm^2 should be adequate, and the extension in space should be less than 10 nm, if possible. With such a densely packed layer of relatively rigid molecules, the value of d can now be taken as the end-to-end length of the backbone section of the soluble moeity. It is reasonable to model the layer as one of uniform concentration, so that the concentration profile can be taken as a step function. Short grafted chains or adsorbed surfactant species clearly fall into this category. Note that charged surfactant species of opposite sign to that of the surface may bind very strongly, especially in the presence of trace water, but that the counter-ions can readily produce unsatisfactorily high conductivities in the system.

V. Stabilization Forces

The interaction of two coated spheres is most easily modeled with a surface layer of uniform concentration. The equilibrium calculations which are used (Napper 1982) apply well to the case of steady interactions under a DC field, but they are much less satisfactory during such transient interactions as collisions arising from Brownian movement or from flow in the system.

The usual approach identifies two interactions. Firstly, the mixing of the layers as particles approach, giving rise to an increase in local osmotic pressure; and secondly, the restriction of the configurations of the stabilizer chains as the particles approach such that $d < r-2a$, where r is the center-to-center separation of the particles of radius a. However, the second effect is unlikely to play a significant role with short densely packed stabilizing moeities, since the mixing interaction increases extremely rapidly.

The change in polymer concentration in the overlap volume results in an excess osmotic pressure Π_e, and the free energy change on mixing is the volume integral over the spherical caps:

$$\Delta G_m = 2\int \Pi_e dV \tag{4}$$

Since we can approximate the layer concentration by a step function, the osmotic pressure is

$$\frac{\Pi}{RT} = c_2 M + B_2 c_2^2 + \ldots \tag{5}$$

where B_2 is the second virial coefficient:

$$B_2 = [\frac{v_2}{M}]^2 \frac{1}{v_1} [\frac{1}{2} - \chi] \quad . \tag{6}$$

Here v_1 and v_2 are the partial molar volumes of the solvent and polymer, respectively, M is the molecular weight of the polymer, and the Flory-Huggins χ-parameter describes the polymer/solvent interaction energy (Flory 1956). For a good solvent $\chi < 1/2$. The geometry of the interaction is illustrated in Fig. 1 below.

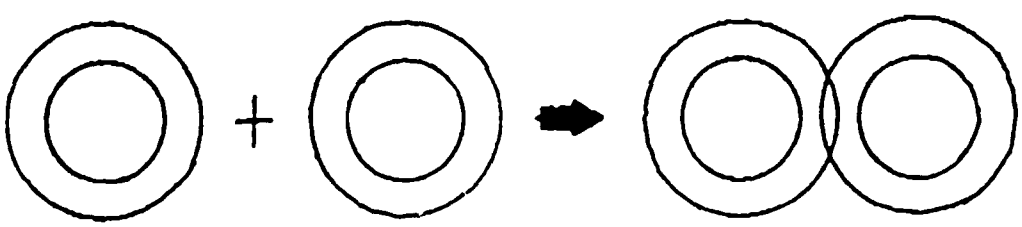

Figure 1. The overlap of two stabilizer layers.

The excess osmotic pressure is calculated from the difference in the two states illustrated in the figure, and the step function for the concentration profile simplifies the integral so that

$$\Delta G_m = \Delta v \Pi_e = RT \Delta v_2 B_2 c_2^2 \tag{7}$$

where Δv is the volume of the spherical cap in the interaction region. The result is the interaction energy V_s due to the steric stabilizer with the separation h = r-2a:

$$V_s = \frac{4\pi}{3} RTc_2^2 [\frac{v_2}{M}]^2 \frac{1}{v_1} [\frac{1}{2} - \chi] [\delta - \frac{h}{2}]^2 [3a + 2\delta + \frac{h}{2}] \tag{8}$$

VI. Changes in Solvent Quality

The interaction energy given above is sensitive to changes in the quality of the solvent as characterized by the χ-value. For a good solvent χ is low, while a θ-solvent can be defined as one for which $\chi = 1/2$, *i.e.*, ideal mixing of polymer and solvent occurs. A polymer in a θ-solvent is as near to a random coil configuration as it can achieve. In a worse than θ-solvent, phase separation occurs, and the polymer comes out of solution.

As the temperature is changed, the value of χ changes. Cooling the solution generally increases the value of χ, *i.e.*, the stabilization can become poor at low temperatures. This may give problems for ER fluids used in harsh environments such as truck engine or cab mounts in northern latitudes. For oil-based systems, higher temperatures do not usually present any problem in terms of polymer solubility until the solvent gets close to its boiling point.

An increase in pressure reduces the free volume of the solvent molecules and tends to increase the value of χ (*i.e.*, pressure increase is equivalent to cooling). Very high pressures may be generated in bearing and seal applications, and erratic performance may result if the ER system was too close to its θ-condition at the start. However, it is likely that the effect of pressure would be to increase bearing temperature, which would counteract the reduction in free volume.

Addition of a non-solvent can dramatically affect the interaction of solvent and stabilizer and so produce coagulation of sterically stabilized particles. This could be a major problem if hydrocarbon oils are mixed with silicone fluids. Also, leaching of plasticizers from flexible plastic components could present stabilization difficulties with some systems.

References

Barrett, K.E.J., "Dispersion Polymerization in Organic Media", Wiley, London (1975).

Flory, P.J., "Principles of Polymer Chemistry". Cornell (1956).

Marshall, L., C. F. Zukoski and J. W. Goodwin, "Effects of Electric Fields on the Rheology of Non-aqueous Dispersions", *J. Chemical Society Faraday Transactions 1* 85, 2785-2795, (1989).

Napper, D.H., "Polymeric Stabilization of Colloidal Dispersions", Academic Press, New York (1982).

5.12 Stability of Electrorheological Fluids

Theo van de Ven

I. General Comments

One of the most important properties of ER fluids is their stability, which determines to a large extent the life-time and durability of the fluid. A vast literature exists regarding the stability of colloidal dispersions, in both the presence and absence of external fields (such as electric, gravitational, centrifugal, magnetic, acoustic or hydrodynamic fields). In the absence of external fields, coagulation is induced by Brownian motion of the particles and the coagulation is termed perikinetic, while in the presence of a sufficiently strong external field the coagulation is called orthokinetic. When the external field is an electric one, as in the case for ER fluids, the orthokinetic coagulation is referred to as electrocoagulation. Coagulation can be either reversible or irreversible, depending mainly on the strength of the adhesive bond between the particles.

The stability of colloidal dispersions can be thermodynamic or kinetic in nature. Thermodynamically stable systems are indefinitely stable, while kinetically stable systems are not truly stable, but coagulate at extremely (sometimes imperceptibly) slow rates. (Some kinetically stable systems are still around which were made a century ago.) The difference between thermodynamically and kinetically stable systems can also be understood on the basis of the energy of interaction between two colloidal particles in the fluid. For thermodynamically stable systems, this energy approaches infinity when the particles approach zero. For kinetically stable systems, this energy is negative at short separations and positive at large separations, and exhibits a maximum referred to as an energy barrier at some intermediate distance. The height of the barrier determines the degree of stability. Sometimes the energy of interaction can also be infinite for kinetically stable systems, but with time the energy becomes finite, for instance due to a slow desorption of polymers adsorbed on the surface of the particles.

From this discussion it is clear that to ensure the stability of ER fluids, what one needs is either a thermodynamically stable system or a kinetically stable system with a very large energy barrier.

When switching on an electric field, one needs to create a network of particles in order to obtain the required ER properties. The formation of such a network is an example of electrocoagulation. In ER fluids the electrocoagulation must be reversible. Ideally, the forces which hold the particles together must be of electrical origin and, as soon as the field is switched off, the forces between the particles should instantaneously reverse to repulsive. The network will then break on a time scale determined by the Brownian motion of the particles.

II. Electrostatic Stability

The most common systems with large energy barriers are electrostatically stabilized systems in which the particles are electrically charged and stabilized by electrostatic repulsion. This repulsion must exceed the universal van der Waals attraction (an electrodynamic force arising from charge fluctuations in the atoms constituting the particles). At short and large separations, the van der Waals force always dominates the electrostatic repulsions, but at intermediate distances the electrostatic force can dominate, provided that the particles are sufficiently charged and that little screening of these charges occurs by dissolved electrolytes. Under these conditions an energy barrier exists, the height of which is determined mainly by the surface charge density of the particles, the electrolyte concentration and the size of the particles.

A quantitative theory exists (the DLVO theory) to describe the competition between electrostatic and van der Waals forces (Verwey 1948). Electrostatically stabilized systems consist of charged particles suspended in a polar medium. As such this is not the preferred way of stabilizing ER fluids; the presence of electrolytes results in electric currents when subjected to an electric field, which leads to heating, convection currents and energy losses. A more desirable way of stabilizing particles involves the use of polymers in non-polar media.

III. Steric Stability

Colloidal dispersions can be stabilized sterically by adsorbing or anchoring polymers on their surfaces (Napper 1983). When the polymers are anchored (*i.e.*, covalently bonded) to the surface, the surface contains no sites to which other polymers can adsorb, and steric repulsion exceeds the van der Waals attraction, then the system is thermodynamically stable. When the polymers are physically adsorbed, the surface fully coated, and the polymer layer is sufficiently thick to prevent approach to distances where van der Waals forces dominate, the energy of interaction approaches infinity when the particles approach one another closely, similar to the thermodynamically stable systems. The difference is that when the polymers are adsorbed, they are in equilibrium with polymers in solution. In principle, these polymers can adsorb on other surfaces (*e.g.*, the electrodes used in ER applications), which can cause a shift in the equilibrium and desorption of polymer from the surface of the particle which, in turn, can lead to flocculation. However, this effect can be minimized by using polymers with a strong preference for adsorbing on the surface rather than being soluble in the medium. Since steric stability only occurs with polymers that are soluble in the medium, this can be achieved by using block copolymers with an insoluble block which strongly adsorbs onto the particles.

To achieve good steric stability, the following conditions must be satisfied:

(a) Polymers must be strongly bound to the surface of the particles, either by anchoring or by using block copolymers.

(b) The medium must be a good solvent for the polymer (or the soluble part of the block copolymer).

(c) The particles must be fully coated with polymer so that bridging flocculation is absent.

(d) The polymer layer must be sufficiently thick so that particles cannot approach to distances where van der Waals forces dominate.

(e) Absence of sedimentation.

Most of these conditions can be stated in quantitative ways, using a variety of modern theories of polymer adsorption and steric stability. These theories fall into several classes: (i) Scheutjens-Fleer theory, which is in essence a lattice theory in which each lattice site is occupied by either a polymer segment or a solvent molecule (Scheutjens 1982); (ii) Monte-Carlo simulations, in which polymer configurations are numerically generated at random and averaged (Lal 1975); (iii) mean-field theories in which the polymer segment density near one or two surfaces is calculated from generalized Fokker-Planck equations (de Gennes 1969); (iv) scaling theories, based on dimensional and scaling arguments (de Gennes 1981); and (v) extensions of the Flory-Huggins theory of statistical mechanics of polymer mixing to adsorbing polymers (Napper 1983). These theories contain the following parameters: (1) the number n_a of attachments per unit area; (2) the number N of segments of the polymer; in case of block copolymers both the number N_A of hydrophilic blocks and the number N_B of hydrophobic blocks (the number of segments is directly related to the molecular weight M of the polymer); (3) the Flory-Huggins χ-parameter; (4) the size of a polymer segment V_s; (5) the size of a solvent molecule; (6) the adsorption energy per segment χ_s; (7) the amount Γ of polymer adsorbed per unit area; (8) the fractional coverage $\theta = \Gamma/\Gamma_{max}$, Γ_{max} being the maximum that can adsorb; (9) the polymer layer thickness L; and (10) the particle radius a.

Some of the parameters are interdependent. For instance, for a polymer with a fixed molecular weight M, the thickness L of the polymer layer depends on the number of attachments n_a. The larger n_a, the larger is L, the asymptotic limit being fully stretched chains for dense anchoring. Similarly for block copolymers, the length L depends on both N_A and N_B. When the adsorbing block is small (small N_A), the amount Γ_{max} that can adsorb is determined by the size of the soluble block (N_B). When N_A is large, Γ_{max} is determined by N_A. Similarly, the length L depends on both N_A, N_B and Γ. For good steric stability one needs a large value of χ_s, $\theta = 1$, a large value of L and a value of $\chi < ½$. This guarantees strong adsorption, full coverage, sufficient thickness and good solubility of the (soluble part of the) polymer. When $\chi > ½$ the system switches from stability to instability, since the adsorbed polymers prefer mutual interpenetration rather than good solubility in the medium. If in certain applications ER fluids are heated, the possibility exists that χ changes from a value of less than one-half to a value of more than one-half, resulting in coagulation of the ER fluid. In ER fluids, χ must be $< ½$ for all temperatures to which the fluid will be exposed.

The energy of interaction of sterically stable systems is shown schematically in Fig. 1. The figure shows two scenarios, one for a small layer thickness and one for a large one. If the layer thickness is small, the van der Waals force dominates at large separations and the particles can be captured in an energy minimum, the depth of which is approximately $E_{min} \sim Aa/12\pi L$, A being the Hamaker constant which characterizes the strength of the van der Waals interaction. If E_{min} is larger than a few kT units, particles can flocculate in this energy minimum. When L is large, the minimum becomes negligible and the system is stable.

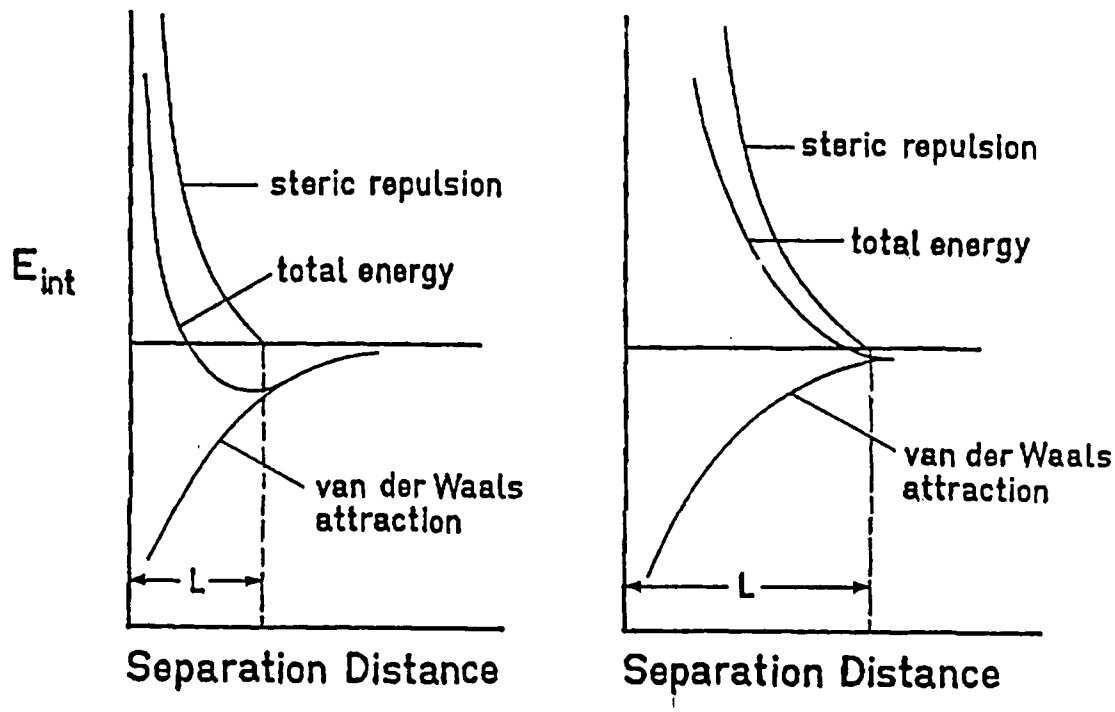

Figure 1. Interaction energy between two particles as a function of their separation. On the left the polymer layer thickness L is small and van der Waals attraction leads to an energy minimum in which particles can be captured. When L is large (right) the energy minimum becomes negligible.

IV. Mechanical Stability

Besides good colloidal stability, ER fluids also need mechanical stability, *i.e.*, they must be stable against sedimentation, shaking, *etc.* To avoid sedimentation, one can use small particles which remain suspended because of Brownian motion or density matching. Suspensions which are perikinetically stable are also usually stable when subjected to small hydrodynamic forces such as those encountered in shaking and transporting the fluid, especially in the case of steric stability. At present, the trend in designing ER fluids is to use rather large particles (1 μm or larger) that are prone to sedimentation. It might be desirable

to investigate the possibility of using smaller particles. Their electrocoagulation can be induced similar to large particles, provided the ratio of electric to random forces is much larger than one. This can always be realized by using high fields. Smaller particles have the additional advantage (besides absence of sedimentation) of fast relaxation after the electric field is switched off.

V. Electrocoagulation

An ideal ER fluid should exhibit good thermal and mechanical stability. As discussed above, this can be best achieved by sterically stabilized particles suspended in a non-polar medium. However, as soon as an electric field is switched on one wants coagulation to proceed rapidly, typically on the time scale of microseconds. This can be achieved by introducing an additional long-range attractive force between the particles. When an electric field is switched on, the particles become polarized and behave as dipoles. Since dipole-dipole interactions can be attractive or repulsive depending on their relative orientations, the same applies to polarized colloidal particles. However, even when there is repulsion, the particles while separating change their relative orientation, in all cases eventually resulting in an orientation for which attraction prevails. Subsequently, the particles approach one another and eventually come into contact and align as a doublet with the electric field.

The time scale τ_{el} of this electrocoagulation depends on the strength E of the electric field ($\tau_{el} \propto E^{-2}$), on the polarizability of the particles and on the distance between them; the larger the polarizability and the shorter the distance (the higher the volume fraction), the shorter the time τ_{el}. The polarizability can be made large by having particles with a dielectric constant very different from that of the medium, having mobile electrical charges adsorbed on their surfaces, or by absorbing a polar medium (*e.g.*, methanol) inside the particles. As soon as the field is switched off, the induced dipole moment of the particles which is responsible for the attractive force disappears, and steric repulsion causes break-up of the aggregates. For electrocoagulation to be effective, the ratio τ_{BM}/τ_{el} must be much larger than unity to prevent the random effects of Brownian motion.

VI. Conclusions

The present knowledge of the behavior of colloidal systems is sufficiently developed to specify in detail the requirements for the design of practical ER fluids, summarized in this report. Technical expertise is available to achieve the preparation of suspensions with the required properties. It appears that in the past the design or choice of ER fluids was made by researchers with insufficient knowledge of colloid science.

References

de Gennes, P. G., *Rep. Prog. Phy.* 32, 187 (1969).

de Gennes, P. G., *Macromolecules* 14, 1637 (1981).

Lal, M. and A. T. Clark, *J. Chem. Soc. Faraday Trans. 2* 74, 1857 (1975).

Napper, D. H., "Polymeric Stabilisation of Colloidal Dispersions", Academic Press, London (1983).

Scheutjens, J. M. M. and G. J. Fleer, *Adv. Colloid and Interface Sci.* 16, 361 (1982).

Verwey, E. J. and T. Th. G. Overbeek, "Theory of the Stability of Lyophobic Colloids", Elsevier, Amsterdam (1948).

5.13 Long Term Stability of ER Fluid Devices

Kurt Wissbrun

I. Background

A. Stability Requirements for Commercial Service

It is recognized that, in order to be accepted commercially, ER fluid devices need to be stable for long periods of time. Stability means that there is no significant change in the performance of the device. The initial cost of the devices, and the cost of interrupting the operation of the machinery of which they are intended to be components, dictates that the period of time be on the order of years. For instance, Hartsock *et al.* (1991) indicate that for automotive uses the stability must be such as "... to ensure the high reliability of devices over the lifetime of the vehicle". Numerous other references to stability requirements are found throughout the ER literature (Bares 1989; Block 1987, 1988; Carlson 1988; Gast 1988; Goossens 1987; Inoue 1989; Makatum 1989; Shulman 1989; Technology Catalysts 1988; Treasurer 1991; Winslow 1962).

Filisko (1991) points out that "the lack of quality engineering design data" is a serious impediment to the design of ER fluid devices. In the present context, "engineering design data" must be understood as including data on the dependence of performance on time at use conditions. The lack of such data, and even of suitable tests for the dependence, is a serious impediment to their development as commercial devices. Demonstration of the ability to meet short-term engineering requirements for an application, such as torque or pressure (Hartsock 1991), is of course necessary for commercial acceptance, but it is not sufficient. It is also necessary to demonstrate the ability to perform satisfactorily for a suitably long time.

Most recently, Petek (1992) has reported the successful testing of a prototype ER fluid shock absorber mounted on a 1990 Ford Thunderbird. He also showed that the performance characteristics of such a device remained nearly unchanged after an accelerated laboratory test described as "representative of life testing of commercial shock absorbers". While field testing can not yet have been performed long enough to assure acceptable performance over the "vehicle lifetime", these results certainly indicate that there is at least the potential to utilize ER fluid devices in commercial applications.

A number of these topics are also addressed elsewhere in this report, specifically in Sections 5.9, 5.12, and in 5.1.3.

B. Identified Causes of Instability

A large number of phenomena have been identified as causes of long-term lack of stability in the operation of ER fluid devices. They are simply listed in this Section; each is discussed, along with proposals for solution of the specific problems, in Section II. They are

a. Sedimentation/settling of particulate component
b. Abrasion of device, seals, electrodes by particles
c. Attrition of particles
d. Incompatibility with device components
    1. Attack on or extraction from elastomers
    2. Corrosion of metal components
e. Chemical Stability
    1. Loss of water
    2. Electrode reactions.

In addition, a number of phenomena observed in scientific studies of dielectric fluids, and in the technological literature on insulating oils (such as transformer fluids and the fluids used in oil-filled capacitors) are thought to be potential causes of problems with ER fluid devices. The operating conditions, *e.g.*, flow of a poorly conducting fluid in a metallic container in the presence of high electric fields (and possibly at elevated temperatures for long times) are sufficiently similar to warrant at least consideration of these phenomena. They include

a. Oxidation of the dielectric fluid
b. Formation of combustible gases
c. Electrode reactions, *e.g.*, wax deposition on electrodes
d. Electrostatic buildup by streaming electrification.

II. Causes of Instability

A. Sedimentation/Settling

Settling of the particulate disperse phase was recognized early as a problem for long term use of ER fluid devices (Winslow 1962), and is perhaps still the one mentioned most often. Matching densities of the fluid and disperse phases to overcome settling is one recommended solution (Block 1987). However, the requirement for equal densities poses a severe limitation on the choice of available materials. Further, unless the coefficients of thermal expansion of the two phases are also matched, their densities are equal at only one specific temperature (Goossens 1987).

Another approach to density matching is to make the disperse particles composites, with a conductive core and an insulating shell (Reitz 1990; Inoue 1989), possibly incorporating hollow microballoons for additional density control. One limitation of this approach, as pointed out by Gast *et al.* (1989), is that as coating thickness increases, the dielectric mismatch with the fluid phase that is required for particle/particle interaction decreases, diminishing the ER effect. The cost of the processing required may be another limitation. And questions of whether the composite particles are subject to enhanced attrition, and whether the deleterious effect of such attrition on composite particles is greater compared to homogeneous ones, have not been addressed.

The use of "weak flocculation" of suspensions as a method of stabilizing them against settling goes back as far as Winslow (1962), and is also recommended by more recent investigators (Goossens 1987; Carlson 1988; Bares 1989). Bares in particular gives a nice description of the physical principles, pointing out that weak flocculation by steric stabilization of the particles is preferred to electrostatic stabilization because of its usefulness in non-aqueous media and its insensitivity to particle concentration. Stabilization also minimizes particle aggregation if settling does occur, thereby promoting the ease of redispersing the settled floc. Bares *et al.* point out the need for dynamic stability of the suspension, and describe a device for testing the occurrence of particle/fluid separation in flow through a channel. Large particle diameters, which may be preferred for their ER effectiveness, are more likely to be "filtered out" than are small ones.

B. Abrasion of Device, Seals, and Electrodes by Particles

The abrasive potential of flowing suspensions of particulates may lead to instability in long-term use by a number of processes. The need to minimize abrasion is recognized (*e.g.*, Carlson 1988), but quantitative requirements have not been published. Seals and gaskets are generally made of relatively soft elastomers, which would be expected to deteriorate when exposed to abrasives. Another concern is that abrasion may roughen the electrodes of the ER device. The resulting locally high electrical fields may increase the rate of undesirable electrochemical processes at the electrodes, as well as exacerbating the results of the static electrification that may occur during flow of dielectric fluids (Roach 1988). Makatum *et al.* (1989) claim the non-abrasiveness of their ER fluids, which are based on pyrolyzed polyacrylonitrile, as an advantage over fluids with inorganic particulates. They give no data to support this claim, although it is intuitively reasonable. The same advantage should hold for other organic semiconductors, such as the polyelectrolytes discussed by Filisko (1991) and by Treasurer *et al.* (1991).

C. Attrition of Particles

The other side of the coin of abrasion of the device by particles is the attrition of the particles by collision with each other and with the device during extended use. Because both ER response and suspension rheology are strong functions of particle size (and presumably, of particle size distribution!) (see, for example, Gast *et al.* 1989), changes of size (distribution) resulting from attrition will be a source of instability of operation. This potential problem has not been discussed extensively, if at all, in the open literature. For example, "Surprisingly little evidence of particle attrition has been reported from studies of ER fluid behavior. However, most fluids have been used under 'real-world' conditions for only very limited time periods ..." (Technology Associates 1988, p. 39). Encapsulation techniques, such as discussed above with respect to density matching, may prove useful for minimizing attrition.

D. Incompatibility with Device Components

"Incompatibility" in this context refers to an undesirable interaction between the ER fluid and the device. It is not, therefore, a property of the fluid alone, but can be discussed specifically only when both the fluid and the device have been identified. One obvious example is an attack of the suspending fluid on elastomeric components, for example, swelling by absorption. Another possibility of attack is extraction of ionic components of the elastomer formulation (for example, zinc salts), which may increase the conductivity of the fluid undesirably. Goossens *et al.* (1987) claim, without supporting data, that their fluids are "... highly compatible with elastomeric materials, in particular rubber, ..."; presumably because their preferred polysiloxane fluids tend to swell hydrocarbon-based elastomers less than do other organic fluids.

Another example, cited for instance by Block *et al.* (1987), is corrosion of metal components by the water required to activate many ER fluids. This may have not only the undesirable effect of weakening the device and of roughening the electrodes, but may also cause the fluid to have unacceptably high electrical conductivity. The use of recently developed "anhydrous" particulates is therefore favored by this consideration.

E. Chemical Stability

The generic term "stability" is often encountered in the ER fluid literature in connection with the role of the water component of many of these fluids, especially the early ones (see, *e.g.*, Winslow 1962; Block 1988). A problem of these systems is loss of ER activity at elevated operating temperatures, attributed to loss of water from the dispersed phase (Treasurer 1991). Increased conductivity because of transfer of water to the suspending fluid can cause a runaway heating situation. Over long periods of operation at elevated temperature, irreversible changes of ER activity are to be expected. The undesirable role of the water activator has ben a major driving force in recent search for improved ER fluids. Nevertheless, there are very few data to substantiate the hoped-for improved stability of the "anhydrous" systems. Inoue (1989) quotes a stability of greater than seven days at 120C, but that is not very persuasive evidence of "long-term" stability as discussed above.

Other sources of chemical instability do not appear to have been considered in detail in the ER fluid literature.

F. Considerations from Analogous Technologies

In the absence of a long history of studies of the long-term stability of ER fluids themselves, it is reasonable to consider lessons learned in established fields of technology with similar or analogous problems. For ER fluids an obvious analog is the area of electrical insulating fluids, such as transformer oils. In both cases, long-term exposure to high electrical fields at elevated temperatures, possibly while being pumped, are the relevant conditions; in both cases excessive electrical conductivity is unacceptable.

A glance at the qualification and/or acceptance tests for insulating oils that relate to long-term stability may be of interest (Johnson 1988; Pearce 1988). They include *Oxidation Stability* (ASTM D 2112 and D 2440); *DBPC (di-t-butyl-p-cresol antioxidant) Content* (D 1473 and D 2668); *Static Charging Tendency*; and *Dielectric Strength of Oil in Motion*. Other tests for impurities related to long-term stability include *Dielectric Loss* (D 924); *Dielectric Breakdown* (D 877 and D 1816); *Water Content* (D1553); *Neutralization Number* (D 974); *Corrosive Sulfur* (D 1275); *Interfacial Tension Against Water* (D 971); and *Dissolved Gases* (D 3612). It seems likely that at least some of these tests or suitable analogs will eventually also be required for ER fluid device applications.

The emphasis on oxidation, and consequently the routine addition of antioxidants to electrical insulating fluids, was somewhat of a surprise. To quote Pearce (1988), "Oxidation is the most common cause of oil deterioration. The transformer manufacturer puts forth a significant effort to make sure that the tank or case is well sealed from the atmosphere. Careful drying and vacuum processing is conducted to remove air and moisture prior to sealing of the tank, after which it is filled with dry air or nitrogen to minimize the exposure to oxygen". This paragraph suggests that attention will need to be paid not only to selection of fluid components and their stabilization, but also to device design and assembly in order to minimize the possibility of oxidation in service.

Traces of impurities, including oxidation products, lead to irreproducible variations of electrical conductivity and dielectric breakdown (see Gallagher 1975, p. 63 for references). Electron donors such as aromatic compounds may form charge-transfer complexes with acceptors such as water or oxygen, and these may increase conductivity, especially under high fields because of the second Wien effect (Gallagher 1975, p. 49; Onsager 1934). The Wien effect is also cited as a reason for non-ohmic conductivity by Klass *et al.* (1967). This suggests that, in order to be meaningful, conductivity measurements must be made at the field strengths encountered in use, even for laboratory tests of stability.

Electrochemical reactions may also cause problems during extended use of ER devices. Deposition of wax-like materials on the electrodes is one example of such reactions (Aplin 1973; MacFadyen 1955, referred to in Gallagher 1975, p. 62). A number of processes - arcing, corona discharge, and thermal decomposition - may lead to the formation of gases, including hydrogen and methane (Haupert 1988). Finally, streaming electrification, which occurs when an insulating fluid is pumped past an insulating solid (Roach 1988), is a major problem with forced oil heat transfer transformers. ER devices which use large amounts of non-conductive components such as plastic containers may also be subject to long-term stability problems because of the occurrence of streaming electrification.

III. Research Needs

The paucity of published data on the long-term stability and performance of ER devices makes it difficult to assess the practical significance of the potential causes of instability discussed above. Such data are needed to provide a baseline for determining research goals

for future needs. It is difficult to believe that these devices will be commercialized without such data.

Assuming that at least some of the potential problems do occur in practice, development of accelerated test methods to monitor proposed solutions to the problems is needed. Development of such tests is not a trivial matter, because it requires at least some understanding of the mechanisms of failure - to ensure that the phenomenon being accelerated is the one of interest, and not an artifact of the test. Also, of course, development of such tests presupposes the existence of a body of actual long-term service data against which to calibrate them. Only after these two steps have been taken will it be possible to set the standards for the "engineering design data" referred to by Filisko (1991).

Test development and problem solution may be accelerated by consultation with authorities in an analogous field, such as transformer oils. Doble Engineering Co., Watertown, MA has been recommended (Erdman 1992) as a particularly useful resource for this purpose. However, it must be kept in mind that the recommendations from one field to another cannot be translated without reference to the particular requirements of ER fluid devices. For example, an antioxidant that might be very suitable for a particular ER fluid matrix might be strongly adsorbed by the dispersed phase and therefore be totally ineffective in the ER fluid system. The possibility of such interactions must be considered at every step of test development and data interpretation.

Acknowledgement: Useful discussion of applicability and significance of transformer fluid technology with H. G. Erdman is gratefully acknowledged.

References

Aplin, K. W. and P. E. Secker, "Proceedings of the 4th International Conference on Dielectric Liquids (Dublin)", ed. T. J. Gallagher, p. 158, Typografia Hiberniae, Dublin (1972).

Bares, J. E. and J. D. Carlson, "Electrorheological Fluid Design: An Overview", 2nd. International Conference ER, North Carolina (1989).

Block, H. and J. P. Kelly, "Electronrheological (sic) Fluids", U.S. Patent 4,687,589, August 18, 1987.

Block, H. and J. P. Kelly, "Electro-rheology", *J. Phys. D: Appl. Phys.* 21, 1661 (1988).

Carlson, J. D., "Electrorheological Fluids", U.S. Patent 4,772,407, September 20, 1988.

Erdman, H. G., personal communication to K. F. Wissbrun, 1992.

Filisko, F. E., "Recent Breakthroughs in Electro-Rheological Materials", Status Report for ER Fluids Assessment Sponsored by U.S. DOE, Dec. 16-17, 1991, p. 6 of Section on Mechanics (Rheology).

Gallagher, T. J., "Simple Dielectric Liquids: Mobility, Conduction and Breakdown", Clarendon Press, Oxford (1975).

Gast, A. P. and C. F. Zukoski, "Electrorheological Fluids as Colloidal Suspensions", *Adv. Colloid Interface Sci.* 30, 153 (1989).

Goossens, J., G. Oppermann and W. Grape, "Electroviscous Fluids", U.S. Patent 4,702,855, October 27, 1987.

Hartsock, D. L., R. F. Novack and G. J. Chaundy, "ER Fluid Requirements for Automotive Devices", *J. Rheology* 35, 1305 (1991).

Haupert, T. J. and F. Jakob, "A Review of the Operating Principles and Practice of Dissolved Gas Analysis", Electrical Insulating Oils, STP 998, H.G. Erdman, Ed., American Society for Testing and Materials, Philadelphia, 108-115 (1988).

Inoue, A., "Study of New Electrorheological Fluid", 2nd. Int'l. Conf. ER, North Carolina (1989).

Johnson, D. L., "Insulating Oil Qualification and Acceptance Tests from a User's Perspective", Electrical Insulating Oils, STP 998, H.G. Erdman, Ed., American Society for Testing and Materials, Philadelphia, 37-45 (1988).

Klass, D. L. and T. W. Martinek, "Electroviscous Fluids.II. Electrical Properties", *J. Appl. Phys.* 38, 75 (1967).

MacFadyen, K. A., *Br. J. Appl. Phys.* 6, 1 (1955).

Makatum, V. N. and D. N. Vorobev, "Electrorheological Effect (ERE) in the Dielectric Fluid-Organic Semiconductor System", 2nd. Int'l. Conf. ER, North Carolina, 1989.

Onsager, L. J., *J. Chem. Phys.* 2, 599 (1934).

Pearce, H. A., "Significance of Transformer Oil Properties", Electrical Insulating Oils, STP 998, H. G. Erdman, Ed., American Society for Testing and Materials, Philadelphia 47-54 (1988).

Petek, N. K., "An Electronically Controlled Shock Absorber Using Electrorheological Fluid", SAE Technical Paper Series 920275, presented at the SAE International Congress and Exposition, Detroit, Michigan (February 24-28 1992).

Reitz, R. P, International Patent Application No. PCT/US89/02705, January 25, 1990.

Roach, J. F. and J. B. Templeton, "An Engineering Model for Streaming Electrification in Power Transformers", Electrical Insulating Oils, STP 998, H.G. Erdman, Ed., American Society for Testing Materials, Philadelphia, 119-135 (1988).

Shulman, Z. P. and A. D. Matsepuro, "Structural Changes in Electrorheological Fluids", 2nd. Internationl Conference ER, North Carolina (1989).

Technology Catalysts, Inc., "Business Opportunities in Electro-rheological Fluids and Devices, A Multiclient Report", 6073 Arlington Boulevard, Falls Church, VA 22044, September 1988.

Treasurer, U. Y., F. E. Filisko and L. H. Radzilowski, "Polyelectrolytes as Inclusions in Electrorheologically Active Materials", *J. Rheology* 35, 1051 (1991).

W. M. Winslow, "Field Responsive Force Transmitting Compositions", U.S. Patent 3,047,507, July 31, 1962.

6.1 The State of the Art of Electrorheology Studies in the Former USSR

E. V. Korobko
Heat and Mass Transfer Institute
Byelorussian Academy of Sciences
Minsk, Belarus

I. The Nature of the Electrorheological Effect.

Experimental Data

Electrorheological (ER) studies began in the USSR as far back as the late 1960's, based on earlier researches conducted by W. Winslow (an American engineer from Colorado Springs) and later works carried out by D. Klass and D. Martinek (Illinois). Performed at several scientific centers in Moscow, Minsk, Kiev, Leningrad, these studies have progressed to new levels of fundamental knowledge and technology. They concern both the nature of the ER phenomenon and development of its applied aspects.

A great deal of effort has been focussed on the following subjects:

1. Elucidation of structural regularities of ER fluids
2. Field-induced transitions in ER fluids
    a. Mechanism of the transitions
    b. Effects of electrophysical properties of solid and liquid phases
    c. Effects of additives (surfactants, activators)
    d. Effects of size and shape of filler particles
    e. Roles of strength and kind of electric field, temperature, type of shear
    f. Response time

Much of the scientific studies of ER fluids by Soviet chemists and physicists derives from the researches of the group headed by Academician P.A. Rebinder (1956) on the mechanism of the ER effect in disperse systems. These studies have revealed that two types of structure can be formed in suspensions: a condensation-crystallization structure bonded through primary valencies and a coagulation structure due to formation by the particles of disordered spatial networks. The coagulation mechanism is more typical of electrorheological suspensions. Here coagulation of the particles is hindered by an energetic barrier formed by solvate shells. This barrier is overcome by changing the energetics of the system in which it is formed, in particular, by an external electric field.

The nature of equilibrium forces of interaction in dispersed systems involves (a) van der Waals forces, (b) an electrostatic component formed by ions of the double layer around a particle, (c) pressure of solvate shells and mechanical properties of thin liquid layers surrounding particles, and (d) chemical bonds between particles. According to the works of Deryagin (1934a, 1934b, 1935) and the theoretical evaluation by Lifshitz (1954, 1955), it is inadmissible to ignore the effect of surface monolayers of ion molecules at the boundary with a disperse medium. The medium possesses peculiar properties in thin films near a particle which differ from those of the bulk fluid: changes in viscosity, in dielectric constant, in molecular orientation. The disjoining pressure of such films produces a specific (non-electric) repulsive force acting at large distances and appreciably exceeding the van der Waals force of attraction (Deryagin, 1964).

Interaction of particles in a fluid may be studied in two ways. Determination of electrophysical and rheological parameters of the dispersion yields integral characteristics which, however, cannot be adequately related to the magnitude of forces acting on individual particles. The second way involves direct measurement of interaction forces (friction, adhesion) between separate particles (Fuks, 1956). Here model systems are sometimes used to represent the particles.

Structural rearrangements of particles in a fluid in the presence of an electric field have been a matter of concern of many Soviet researchers. First of all it is worth noting the works by Usiyarov *et al.* (1965) and Lavrov *et al.* (1967). During electrophoretic deposition of polytetrafluoroethylene and polyacryonitrile from suspensions in aliphatic alcohols, a squeezing action of the d.c. electric field was revealed which causes plastic and elastic deformation of structures (Usiyarov, 1965, 1966a, 1966b, 1966c, 1970). According to these authors, when a threshold voltage is exceeded, polarization and deformation of ionic atmospheres produces a consolidation characterized by the formation of particle aggregates stretched along force lines of the field. The yield stresses of such suspensions, determined by the Wailer-Rebinder methods, increase proportionally to E^2.

Similar events have been observed during the electrophoresis of semiconductor oxides. (Lavrov *et al.*, 1967). It has been shown that particles have no ionic atmosphere under the experimental conditions, and material polarization is of predominant importance. This is confirmed by the absence of aggregation in suspensions of Al_2O_3 or $CaSrBa(CO_3)_3$ in pure dielectrics.

The occurrence of chain aggregates has been also observed in a.c. electric fields (Usiyarov, 1965, 1966a, 1966b, 1966c, 1970; Vorobieva, 1967). Thus T. A. Vorobieva (1967), studying the effect of electric fields on dispersions of spheres of melamine-formaldehyde resin and poly(vinyl acetone) in water, observed the formation of bridge structures by conducting particles, but only separate thread-like aggregates by non-conducting particles.

Lavrov and Smirnov (Lavrov, 1967a) showed the preferential contribution of polarization of ionic atmospheres (electric double layers) to the interaction between particles of the copolymer styrene-methylmethacrylate dispersed in alcohols. Observations of the behavior

of particles of styracryl and copolymer CH-20 in heptane have shown that particles are displaced toward both electrodes. This indicates the absence of ionic atmospheres around them in a nonpolar medium. The displacements are explained by the ponderomotive interaction of polarized but uncharged particles. The authors have observed damped oscillations of fine particles, explained by their acquisition of charge from an electrode, Coulomb repulsion, loss of charge during motion, and attraction by a polarized particle. The oscillations continued for some time after removal of the electric field. An important conclusion is drawn that, in the process of enlarging aggregates and forming structural chains, the ohmic resistance of a disperse system decreases and better conditions develop for charge transfer.

When analyzing the causes of aggregation and motion of particles of styracryl and CH-20 in heptane towards electrodes, it has been assumed that the interaction of particles proceeds due to polarization of their material and formation of a solvate layer. An electric field makes particles come together and squeezes elastic boundary shells, manifesting anomalous properties and creating a disjoining pressure. When an electric field is de-energized, it disjoins particles (Lavrov, 1969b).

Bibik *et al.* (1968) pointed out that we should take into account not only interaction between the individual particle and the external field, but also the neighboring particles and the external field's effect on them. Bibik also believes that enhancement of the dipole interaction of particles exposed to an external electric field lies behind the aggregation. This is observed in the case of particles having rigid dipoles (Tolstoy, 1962) or strong polarizability.

Structurization of particles of metals, semiconductors, soaps and proteins dispersed in liquid dielectrics in the presence of a d.c. electric field was studied by Gindin *et al.* (Gindin, 1950, 1954, 1956, 1965) and Gindin and Volpyan (Gindin, 1968). In suspensions of aluminum in aviation gasoline, an increase of field strength causes motion of particles toward a cathode, precipitation, growth of particle aggregates, separation, and transfer of separate particles onto the anode. The process ceases when the interelectrode space is filled by bridges oriented along force lines of the field. Up to a certain field strength the system remains dielectric and current-voltage characteristics are straight (Ohm's law holds), but at high field strengths the resistance grows in a manner similar to the behavior of metallic conductors heated by Joule heat. An initial deposition on the cathode is explained by the fact that aluminum particles become positively charged during their contact with the medium. Interaction between particles and the cathode occurs as a result of polarization; owing to electrostatic induction, new particles become dipoles and are attracted to an electrode and to each other.

It has been shown that oxide films cause low conduction. A bridge in a field manifests high stability (Gindin, 1950, 1956, 1965). After breakdown all bridges fail, with the exception of one bridge in which oxide films are destroyed and a metallic bond is formed between particles. The character of structurization does not change with the electrode material

(steel, aluminum, copper, lead, silver, chromium), state of its surface, configuration, nor the distance between electrodes.

Analysis of the behavior of other metals in dielectrics supports the hypothesis of preferential influence of surface films on structurization in the presence of an electric field. Structures are formed by particles characterized by low surface electric conductivity. With particles of comparatively high conductivity (tin, zinc), liberation of gas bubbles has been observed. For metals without oxide films (silver, antimony), stable structures fail to form before breakdown. In suspensions of semiconductors (cuprous oxide, boron carbide), a spasmodic increase of current followed by its stabilization was observed.

Also, a study has been made of suspensions of soaps (stearates of barium, zinc, nickel, cobalt, copper and barium oleate) in aviation gasoline and vaseline oil. Closing of ribbon-like structures has been discovered through the accompanying drastic increase of conductance. Protein suspensions in the same media displayed an interesting feature: dry protein particles become structurized merely by contact with one another, while wet particles, like the soaps, form ribbon structures. It is assumed that their conductance is ionic and is of a surface character (Gindin, 1968).

Nonaqueous disperse systems were the subject of a series of studies by Yu. F. Deinega and G. V. Vinogradov (Deiniga, 1962, 1967). Experiments with greases containing particles of soap thickeners revealed the capability of soap crystals to orient in shear flow and form frozen structures when flow stops. As a rule, there is an electric double layer at the interphase in greases. If the structural skeleton bears a charge of mainly like sign, in an electric field the skeleton is squeezed near one electrode, while separation of a disperse medium occurs near the other electrode, *i.e.*, the resistance to strain decreases.

Polarizable systems in which electrokinetic phenomena are absent behave differently. In this case, an imposed electric field causes an increase in viscosity, *i.e.*, gives rise to an ER effect (ERE). Systematic ER effect studies have being conducted at the Heat and Mass Transfer Institute of the Byelorussian Academy of Sciences for more than 20 years. Several research groups headed by Professor Z. P. Shulman are concerned mainly with study of the behavior of hydrocarbon systems in an electric field. The choice of such media is connected firstly with the possibility of creating high-strength electric fields owing to low electric conductivity of the medium, and secondly with a number of specific features in the structure of the electric double layer. In particular, the double-layer thickness in hydrocarbon media is higher by two orders of magnitude than in aqueous systems. As a rule, thin hydrate layers are formed on the surface of hydrophilic phases which are important in forming charge and polarization. A hydrocarbon medium provides favorable conditions for developing electric inhomogeneity of the surface and promotes its maximum polarization.

Visualization of the behavior of dispersed particles in hydrocarbon media has been carried out by direct observation of particle displacement in a condenser gap as well as by high-speed photography and speckle-interferometric techniques (Shulman, 1974b; Blinkov, 1989a). When an electric field is imposed, particles of the solid phase, which earlier were

homogeneously distributed in the disperse dielectric medium and exhibiting Brownian motion, cease for a moment to move. Then they start spasmodically to move toward electrodes, oscillate between them, and form separate aggregates. Considerable inhomogeneities of the electric field between particles in high-concentration suspensions lead rapidly to joining of the particles to form bridges connecting oppositely charged electrodes and then to a continuous anisotropic structural skeleton.

Original studies of chain structures have been conducted by Z. P. Shulman *et al.* (1974c). Having revealed the similarity in behavior of fine ERF particles and silica gel spheres, the authors studied oscillation, bridge formation and strength characteristics of model silica gel particles. They showed that oscillation due to recharging is related to the presence of an adsorption activator layer on particles (Fig. 1). It is assumed that, in a disperse phase, a dielectric particle with an adsorbed layer of a polar substance acquires a charge in the field and behaves as a conductor (Fig. 2). Studies of particle oscillations, by recording electric pulses due to recharging of the particles near electrodes, have allowed Z. P. Shulman and A. D. Matsepuro to make an assumption about the presence of two types of charge carriers in an adsorption layer: *i.e.*, electrons and ions. Measurements of the force of withdrawal of a central silica gel sphere from a three-particle bridge with variation of field strength and amount of activator have revealed that the strength of chain structures is an ER effect characteristic, *i.e.*, dielectric polarization lies behind the interaction of particles. Occurrence of induced dipole moments results in emergence of polarization interaction forces between particles which disappear when the electric field is deenergized.

A thorough study of specific features of dielectric polarization activated by ER fluids in the presence of high-voltage potential fields was conducted at the Heat and Mass Transfer Institute of the Byelorussian Academy of Sciences by A. D. Matsepuro (Shulman, 1972a) and E. V. Korobko (Shulman, 1985a) as well as at the Kiev Institute of Colloid Chemistry and Water Chemistry by Yu. F. Deinega *et al.* (Deiniga, 1979, 1985). It was shown that specific features of dielectric polarization of disperse systems are determined by processes proceeding in electric double layers, hydrate layers and adsorption layers. Free and bound charges accumulate at an interface in the presence of an electric field, producing macrostructural (or migration) polarization. In polar media, the occurrence of chain aggregates is usually associated with polarization of an ionic atmosphere, while intrinsic polarization of materials in these cases has no appreciable influence. Important in non-polar media, particularly in hydrocarbons, where charge concentration is very low, is the structure of disperse phase particles (Maxwell-Wagner polarization) and hydration of particles with associated film polarization (Kovganich, 1977).

In the case of electric contact between particles, exchange of charges between them results in a decrease of the force of polarization, attraction, and even a change of its sign. Charge decrease due to exchange between particles occurs for a finite time $T_c = RC$, where R is the resistance and C the capacitance of the electric contact. In low-frequency electric fields, charges are neutralized with time and a conductance path is formed which weakens the ER effect. With increasing frequency, the ER effect increases until polarization begins to decrease. One way or another, a conductance increase of the particles increases the

attractive polarization forces until free charges move within the limits of a particle and charge transfer between them is, in fact, absent. These processes in intermediate layers are often more dependent on electric properties at an interphase than on volume characteristics of particles and medium (their permittivities). This was confirmed by experiments conducted by A. Kim (1975) who used ferroelectrics with dielectric constant ~ 10^3 as ERE fillers and did not obtain appreciable enhancement of the ER effect.

The above results have made it possible to treat the ER effect as a phenomenon fully dependent on the electric situation at the interphase. This stimulated work during the 70's and 80's in the synthesis and study of highly effective ER fluids by modifying the interphase and the surface properties of the particles.

II. ER Fluid Compositions

In addition to silica gel and its modifications investigated by Shulman *et al.* (1972a) and Gorodkin *et al.* (1975a), a study was made of oxides behaving as semiconductors (Shulman, 1990b; Trapeznikov, 1981). It has been established that Al_2O_3, TiO_2, CoO, Ni_2O_3, and Cr_2O_3 are the most effective oxides for ERF. PbO, FeO and oxides belonging to the second group of the periodic table do not exhibit pronounced electrorheological sensitivity.

Disperse polymers have been also investigated (Lazareva, 1991). Activity in the presence of an electric field was exhibited by those polymers which have acid groups. They may be of any type, *e.g.*, neutral and bound, or in the form of a salt. Their main role is associated with increasing the concentration of hydrogen ions in the medium. Owing to ionization, the polymer acquires a negative charge with respect to water molecules, and the free water becomes displaced in the field due to electro-osmosis. The presence of cations and the availability of charged groups on the polymer skeleton influences its polarity and water adsorption characteristics. The degree of charge separation depends on the type of cations and is determined by their density. Salts based on cations belonging particularly to the 1a and 1b group of the periodic table, with low atomic weight, such as Li, Na, K, Cu, have proved to be optimal. Highly effective fillers (3 to 5 times better then those based on silica) for electroviscous suspensions have been obtained by introducing carboxyl, sulfonic, or phosphoric groups into the polymers of cellulose.

Similarly to works by H. Block and Kelly (1986, 1988), scientists at the Institute of General and Inorganic Chemistry of the Byelorussian Academy of Sciences (Minsk, Belarus) have proposed a new approach to creating an optimal charge density on the particles (Makatun and Vorobiev, 1989). This is realized not with the help of a shell of conducting activator, but by using solid-phase "electronic conductors", *i.e.,* materials with n-type or p-type but not ionic conduction. These are mainly organic semiconductors. Electrons, acting as single charge carriers, transfer charge from one side of a particle to another, thus eliminating the necessity for the presence of ions. This aspect is very important, since the synthesis and the use of ER fluids containing activating additives is to a considerable extent limited by the low

level of stability of the properties of an adsorption layer and their dependency on external factors, namely moisture, temperature and pressure.

Recently we have proposed use of a solid phase in the form of light feather-like fibers (Korobko, 1991a), in particular phosphorocarbon based on a cellulose precursor. In such element-containing fibers, the required electric properties of a surface are determined by the temperature of preparation. This allows the ER fluid's stability against sedimentation to be made highly sensitive to the electric field, as compared to ER fluids based on the same material in powder-like form. It has also been proposed to increase the sedimentation stability of ER fluids by superimposing a magnetic field. With this aim in view, Makatun and Vorobiev (1990) used ferromagnetic particles coated with a polymeric semiconductor possessing good adsorption and electric properties.

A traditional method to modify colloid systems, also used for ER fluids, is incorporation of activators, surfactants, thixotropes and other additives into the medium. Some works have been published concerning the influence of types of activators, namely water, organic acids, amines, substances possessing an intrinsic dipole moment, and even conducting particles (metallic powder) (Efimov, 1976). More systematic studies of the choice and use of activators are presented by Shulman *et al.* (1972a), Matsepuro (1983), Kordonsky *et al.* (1991a), and Deinega *et al.* (1978). Thus, in particular, it was shown that a maximum in the ER effect maximum exists in its dependence on water content of the particles. G. Petrzhik, O. Chertkova and A. Trapeznikov at the Institute of Physical Chemistry of the USSR Academy of Sciences (Moscow) have studied the influence of the nature of the nonionic surfactant on the rheology of titanium dioxide suspensions in vaseline oil and white spirit (Petrzhik, 1980a). The most pronounced effect was exhibited by additives of glycerine oleate and triethanol-aminoolate. The mechanism of the phenomenon is associated with a transition of the surfactant due to the electric field into a liquid-crystalline state at the points of particle contact, where the field has its maximum strength. It is characterized by an increase of the viscosity and permittivity of these substances. This hypothesis later received partial support from experiments with cellulose solutions (Ermolenko, 1987; Kim, 1975); the dependence of their dielectric characteristics on electric field strength is presented in Fig. 3. A study was also made of the contribution of the liquid phase to the ER effect. As illustrated in Table 6.1.1, the liquid phase was found to play a certain role, though not so important as that of the disperse phase.

Table 6.1.1 The Influence of Different Types of Oils on ERF Viscosities in 10% Suspensions of Carboxymethyl Cellulose.
(Shear rate is $\gamma = 16.2\ s^{-1}$)

Oil used as Liquid Phase	ERF Viscosity η (Pa s)	Relative Viscosity $\Delta\eta/\eta_o$	Oil Viscosity η, Pa s
	E = 0	E = 1.0 Kv/mm	
I-40	0.5	6.00	0.07
KS-19	1.63	1.22	0.40
Castor oil	1.85	3.20	1.20
I-20	0.22	7.18	0.04
I-50	0.59	5.00	0.19
I-30	0.29	15.40	0.07
I-8	0.07	49.70	0.04
VM-4	0.66	4.37	0.22
Vaseline Oil	0.37	8.70	0.11
AMG	0.07	50.30	0.02
Transformer Oil	0.04	25.7	0.03

The main requirements for disperse media are as follows:

1. Initial viscosity (without field) from 2 to 20 cp at t = 25°C. Media of lower viscosities are too volatile
2. Stability with respect to degradation due to aging
3. Purity
4. Dielectric permittivity less than that of particles
5. Density ~ 0.95 g/cm_3
6. T of freezing -70°C to -30°C
   T of boiling from 150° to 200°C
7. Resistivity from 10^{12} to 10^{14} ohm·cm
8. Break-down voltage ~ 50kV/cm
9. Non-toxic
10. Hydrophobic
11. Low cost

The media most often used are various mineral oils such as lubricants or those belonging to the kerosene series, synthetic dielectric fluids obtained by polymerization of unsaturated hydrocarbons, high-molecular-weight polyoxyalkyd compounds, and ethers of various acids.

Improvement of the most effective ER fluid formulations has been effected by changing the ratio of the known components, *e.g.*, by decreasing the content of an oleic acid in a silica gel ERF (Gorodkin, 1990) or by substituting for a component another material belonging to the same class, *e.g.*, an aviation oil is substituted for transformer oil (Shulman, 1972b). Attempts have been made to improve the fluids' ER characteristics by various physical manipulations, in particular, by preliminary treatment at low temperatures (Shulman, 1988). Additional improvements have been achieved without deterioration of the sensitivity of ERF compositions by Kovganich *et al.* (1979), Petrzhik *et al.* Certif. 7515596 (1980b), and Blokh *et al.* (1988). Thus, with the aim of enlarging the range of usable temperatures, Kovganich *et al.* (1979) used ferrites as mineral powders in oil. In order to decrease thixotropic properties of a suspension, it has been proposed to use a composition consisting of two solid fillers, namely, plastic bentonite clay and finely dispersed silica (aerosyl). In some cases, *e.g.*, to remedy less stable samples without a flat surface, workability of ER fluids was improved by using a porous patch impregnated with the working medium (Blokh, 1988). It has been proposed to increase this method's reliability by using an antistatic varnish to coat both the workpiece and the electrodes (Shulman, 1985d). In another case, rapidly drying polymer solutions with different contents of ionogenic groups have been used instead of a hydrocarbon base for ER fluids used as films (Ermolenko, 1990a).

Presently no ideal highly effective general-purpose ER fluids exist. Even when they meet the requirements of investigators for the desired effect, their practical use is restricted by indirect factors, *e.g.*, a narrow usable temperature range. Efforts to create improved ER fluids are under way mainly in Minsk within the frame of academic research studies.

III. Theoretical Description of the ER Effect

Based on experimental information on the complex physico-chemical, electric and physical processes occurring in an ER fluid in the presence of an external electric field, investigators have proposed phenomenological models and micromodels to describe the electrorheological effect. Two approaches are available to describe the effect of structurization on rheological properties of dispersions exposed to an electric field.

The first approach is the analysis of electrorheograms, which makes it possible to choose a rheological equation of state and to establish the dependence of its coefficients on solids content, surfactant concentration, electric field strength and temperature. Shulman and Korobko (1978) in Minsk, Belarus have proposed use of the four-constant equation for a nonlinear viscous-plastic phase to describe an ER fluid (Shulman, 1978c).

$$\sigma^{1/n} = \sigma_0^{1/n} + (\eta_p \dot{\gamma})^{1/m} \qquad (1)$$

The yield strength σ_0, the plastic viscosity η_p, and nonlinearity parameters n and m are functions of the electric field. This equation may be used to analyze hydrodynamic characteristics of ER system flows. The second approach is concerned with determining the effect of the electric field on the particles, causing their internal rearrangement and additional dissipation of energy.

There have been attempts to describe structural changes in an electric field in terms of particle orientations (Zaitsev, 1969) which are typical of weak fields. Shilov and Deinega (Shilov, 1969; 1971) evaluate the effect due to interelectrode circulation of particles across the channel on the ER effect. Here additional dissipation is attributed to the force resulting from the difference in longitudinal velocities of particle and medium. The increase in viscosity has been estimated by the formula:

$$\Delta\eta = \frac{N_i (m_{eff}/m)\, u^2}{6\pi\eta a} \tag{2}$$

where u is the velocity of particles, m_{eff} is the effective mass of the particle including the entrained medium, and N_i is the number of particles per unit volume. Usually $\Delta\eta/\eta$ does not exceed 10%.

The main reason for the increase in viscosity and the change in other rheological constants is the interaction of particles within structures. The problem of accounting for it consists of two parts: hydrodynamic and electrostatic.

The hydrodynamic problem is solved comparatively simply, for instance, as proposed by Bibik et al. (1973). In the field perpendicular to the fluid flow, the chains which form move as a whole. Each particle is subjected to a friction force $F_i = ku_i$ where $u_i = \dot{\gamma} r_i$ is the medium velocity, $k = 6\pi\eta a$ is the friction coefficient for spheres with radius a, and r_i is the distance of the ith particle from the chain center. At the chain center a maximum shearing force

$$F(N) = \sum_{i=1}^{N/2} F_i = \frac{k\dot{\gamma} r (N^2-1)}{8} \tag{3}$$

develops that depends on the number of particles in the aggregate. $F(N) = -F_D$, where F_D is the maximum tangential force of the dipole interaction of neighboring particles in the chain. $F_D = -3\overline{p}^2/r^4$, where $\overline{p}$ is the average value of the projection of the dipole moment of the particle onto the field direction. When a fluid flows, energy $W = F_i U_i$ is dissipated by each particle of the chain:

$$W = 2\sum_{i=1}^{N-1/2} W_i = \frac{2}{3} k\dot{\gamma}^2 r^2 \frac{N(N^2-1)}{8} = \frac{2\overline{p}^2}{r^3} N\dot{\gamma} \tag{4}$$

In a volume unit containing n particles, $W^* = Wn/N = 2\bar{p}^2 n\dot{\gamma}/r^3$. The friction force is $f_C = W^*/\dot{\gamma} = 2\bar{p}^2 n/r^3$. The total friction force also includes the effect of energy dissipation by unbound particles f_E and by the medium f_0, *i.e.*, $f = f_C + f_E + f_0$, while the viscosity is $\eta = f/\dot{\gamma}$.

Hence with a knowledge of the particle moment, one may calculate such rheological parameters as η and W^* and, using methods of solid state theory, the yield stress τ_0 and the elastic modulus G'.

The electrostatic problem is more difficult. Determination of the dipole moment involves calculation of forces acting in the field on a single dielectric particle, usually of arbitrary shape, in a liquid dielectric, and coated with a conducting activator layer. It is necessary to include the effect of neighboring particles, also charged, in close proximity. This problem requires a knowledge of charge distribution over the surface of the particle, system morphology, and specific features of the electric situation at the interphase. It is complicated and has no accurate solution in its general form.

In a field, dielectrics (charged or uncharged) are affected by mechanical forces.

$$\mathbf{F} = \mathbf{p}\ \mathbf{grad}\ \mathbf{E} \tag{5}$$

where p is the electric moment (Landau and Lifshitz, 1969), and E is the effective electric field strength in the dielectric. These are affected by the appearance of polarization charges (surface and volume).

Now consider at length the regularities of particle polarization in ER fluids. In the simplest case of a single particle in a dielectric medium, the potential (and therefore E) may be calculated from the Laplace equation (Landau and Lifshitz, 1969; Dzhuvarly, 1969):

$$\nabla^2 \Psi = 0. \tag{6}$$

A solution of this equation is known in the form:

$$\Psi = -E \cdot r \cos\theta \ [1 - \beta \frac{a^3}{r^3}] \tag{7}$$

where θ is the angle between vectors $\bar{r}$ and $\bar{E}$, and β is the dipole coefficient. In dilute suspensions, $\beta = (\epsilon_p - \epsilon_m)/(\epsilon_p + 2\epsilon_m)$.

In the general form, β is attributed to electronic, ionic and dipole components, the latter being associated with orientation of rigid dipole moments (*e.g.*, ferroelectrics). For ER fluids, $\epsilon_p/\epsilon_m > 1$ and $\beta \approx 1$. The larger the difference of dielectric permittivities between the particle (ϵ_p) and the disperse medium (ϵ_m), the stronger the separation of excess charges which develops on the particle surface due to polarization. At a distance, they act as point dipoles with moment **p**. The expression for the dipole moment takes the form $p = \epsilon_0 \epsilon_m \beta a_3 E$, where a is the sphere radius. In going from a microscopic field of dipoles to a macroscopic field, it is necessary to relate the value of the total dipole moment **P** to the dipole moment of the particle, and a mean field strength E' to the strength E of the dipole

field. If N is the number of dipoles in the total volume v, we have $\mathbf{P} = N\mathbf{p}$. In weak dielectrics, $\overline{p\nabla E'} = \overline{p}\cdot\nabla\overline{E'}$ and $E' \approx E$. In strong fields, with both molecular and interphase ERF polarization of considerable magnitude, such an assumption is not valid.

When two spherical particles with radius a and distance between centers r are considered in the presence of a uniform electrical field E, then it is expected that both particles polarize and create dipoles, thus enhancing electrically induced forces of interaction. The energy of interaction between dipoles is:

$$W = \frac{KT\lambda}{2}\left[\frac{3\cos^2\theta - 1}{(r/2a)^3}\right] \tag{8}$$

where $\lambda = \pi\epsilon_0\epsilon_m(\beta E)^2a^3/kT$.

The expression for the forces acting between two particles is the derivative of the total energy of the system

$$F = \frac{3\pi}{4}e_0e_m(\beta E)^2a^2f \tag{9}$$

where

$$f = \left(\frac{2a}{r}\right)^4\{(2f_\parallel\cos^2\theta - f_\perp\sin^2\theta)l_r + f_r\sin 2\theta\, l_\theta\} \tag{10}$$

$f_\parallel$, $f_\perp$, and f_r are the parallel, perpendicular and torsional components of f, and l_r and l_θ are unit vectors.

Thus calculation of F requires determination of dipole coefficients l_r, l_θ and knowledge of $f_\parallel$, $f_\perp$, and f_r. The dipole coefficient for dielectric particles having surface conductance was determined for a single particle by Dzhuvarly et al. (1969) and by N. A. Karapetyan (1973), with an account of the effect of fields of neighboring particles:

$$\beta = \frac{e_p - e_m}{e_p + 2e_m(e_p - e_m)f^*} \tag{11}$$

where $f^* = 4\pi An_2/3$ is the volume concentration of inclusions and N_2 the number of particles per unit volume.

With reference to the experiments conducted by A. S. Matsepuro (Shulman, 1977a), who showed that a dielectric whose surface is coated with an activator behaves as a completely conducting particle in a field, B. M. Khusid (1977a) has calculated the potential of a

conducting sphere in a condenser gap and also the dipole moment and interaction force of two spheres having a potential (Shulman, 1974). He derived an expression for the specific force of stretching a structural bridge (Shulman, 1977b):

$$\Delta\tau = \frac{3}{2}\varphi\varepsilon_p\varepsilon_0 E^2 \frac{IN^*}{\sqrt{\lambda^*}} \tag{12}$$

where N* is the fraction of particles forming the bridges, r_{max} and r_{min} are the maximum and minimum distances between particles in a bridge, $\lambda^* = (r_{max}-r_{min})/a$, and

$$I = \int_{r_{min}}^{r_{max}} \frac{R^2}{r(R_1 + R_2)}\, dr \tag{13}$$

Here R_1 and R_2 are respectively the resistances of the particle and the gap between particles.

The influence of neighboring particles has not been taken into consideration, and comparison of predicted and experimental values has produced a considerable discrepancy. Taking into account mutual polarization of particles in calculating the bridge equilibrium during flow, Yu. F. Deinega and V. Ni. Shilov (1975) developed the following formula for viscosity variation in an electric field:

$$\Delta\eta = \frac{N\varepsilon_m E^2}{\pi\dot{\gamma}}(f' - g) \tag{14}$$

where f'and g are constants in the Krasny-Ergen formula for the interaction energy of polarized particles as a function of the relative positions of the particles and their polarizability (Vlodavets, 1974).

The present expression gives viscosity variations eight-fold larger than those obtained by E. Bibik and V. E. Skobochkin (1972), and 2.5-fold higher than experimental values. This seems to be connected with the fact that contacting particles in a non-conducting medium have been considered in deriving Eq. 6. For this model the polarization interaction is maximal, since Eq. 6 gives an upper estimate of viscosity variation due to formation of chains which do not span the electrodes.

A more complete solution to the electrostatic problem, based on dipole-dipole interactions including interparticle effects and electric surface phenomena in the electric double layer, was obtained by V. R. Estrela-Liopis and V. V. Dudnik (1987), using a time-scanning method.

Calculation of friction forces parallel and perpendicular to the electric field vector has permitted estimation of critical parameters of rupture of a bridge composed of starch

particles in vaseline. Comparison of the calculated parameters with experimental data has shown fair agreement (Deinega, 1990) in the domain of low to moderate fields (up to 2.5 Kv/mm). With increasing field intensity, considerable deviation was observed; this is attributed to nonlinear polarization appearing in the field and to electrostabilization of the particles (Simonova, 1978). The Laplace equation may be used only in the absence of charges on the particles. However, as has been shown by many investigators, the ER effect is a more complicated phenomenon, whose nature is associated not only with polarization interaction of particles, but also with adsorption of charges at the interface between different dielectrics due to leakage current (the Johnsen-Rabeck effect) (Johnsen, 1923). In this case the problem is reduced to solution of the Poisson equation, permitting determination of the potential of the field of volume charges, provided the location of these charges is known. Even in the simplest case of only two particles, the multipole expansion is associated with an infinite chain of differential equations and has no solution.

In practice, use is often made of other approaches which were developed to solve analogous problems. Thus, in the theory of magnetic fluids (Rozensweig, 1989), the Brown theorem (Brown, 1951) on the equivalence of dipole and pole approaches is used. The latter approach represents the interaction forces of two dielectrics in the form of tension forces and pressure at their interface (Ponofsky, 1963; Landau and Lifshitz, 1982). When this approach to ER fluids was first attempted (Deinega, 1986), only the tension forces were taken into account, leading to incorrect results which do not reflect the dependence of the force on the distance between particles. Later A. A. Mokeev *et al.* (1991) (Fig. 4) treated the ER fluid as a network of bridges consisting of unit condensers (*particle | disperse medium | particle*). The interaction forces between particles were calculated from the Maxwell tension tensor. The forces are preset by an intensity jump at the interface of dielectrics and consist of two components: polarization arising from volume and interphase polarization of dielectric forces and appearance of bound charges on their surface, and adsorption due to accumulation of free charges with running leakage current on the surface of particles. The expression for the force is of the form:

$$F = \frac{1}{2}e_0 e_m \left\{ \frac{e_p}{e_m} + \frac{a}{\xi} \left[1 - \exp\left(-\frac{t}{T_c} \right) \right] \right\}^2 E^2 SN \qquad (15)$$

where ξ is the thickness of the layer of disperse medium between particles, SN is the contact area of N bridges with the electrodes, and T_c is the time of change of adsorption charge.

The effective viscosity has been determined by calculating momentum transfer during collisions of aggregates and separate particles, as well as taking into an account the dissipative contribution of the bridges which were not destroyed. The role of an aggregate in determining the shear rate depends on the number of interacting particles. An expression for the viscosity is of the form:

$$\eta = \eta_0(E)\left[1 - \exp\frac{\dot{\gamma}_{0\tau}^2 - \dot{\gamma}^2}{\dot{\gamma}_0^2}\right], \tag{16}$$

where

$$\eta_0 = \left[k(1 - \exp E/E_0)\frac{E}{E_0} + k_2\frac{E^2}{E_0}\right]^{1/2}. \tag{17}$$

In the limiting case, the dependence of τ on γ corresponds to the Shvedov-Bingham law.

To sum up this theoretical excursion, it should be noted that ER fluids are still very poorly presented in terms of generally accepted electric and hydraulic approaches for colloid systems. Any fundamental ER fluid micromodel must take into account the parameters of the components, *i.e.*, dielectric characteristics, distribution of charges (both polarization and adsorption) on the surfaces of particles, their shape and dimensions, and their concentration. The latest approaches described by Mokeev (1991) give some hope for a real transition from micromodel to phenomenological laws, with definite understanding of the contributing factors as specified by the parameters of the components and of the electric field. However, though some attempts have been made (Report, 1980), there has not yet been adequate consideration of the relaxation processes which occur during polarization and shear of particles in real suspensions, attributed to the existence of charge carriers of different mobility and to additional oscillatory hydrodynamic motions of particles undergoing flow.

IV. The Principal Regularities in Manifestation of the ER Effect

Structural rearrangements initiated in ER fluids by electrical forces cause changes in a series of physical properties: mechanical, thermal, electric, optical, acoustic, *etc.* As a result, the possibility arises to control transfer processes (hydrodynamics, heat and mass transfer) and design new technologies and devices on this basis. Let us consider the regularities of ERF response to electric effects.

Mechanical Properties of ER Fluids

A study has been made of the following regimes:

1. Continuous strain: fully developed flow with (a) constant shear rate or flow rate (Gorodkin, 1975b; Shulman, 1989; 1990); (b) with constant shear rate; (Korobko *et al.*, in press).

2. Continuous strain within the limits of reversible deformations, under condition 1a (Shulman, 1990).

3. Cyclic strain with amplitudes too small to cause structure failure (Shulman, 1989).

4. Structure failure (transition through the yield stress) produced by fast deformation, *i.e.* rapid rupture of structure under static shear ($F \perp E$) and under separation ($F \parallel E$).

Consideration is given to some unsteady-state deformation processes produced by sudden change of a d.c. electric field or use of a.c. and pulsed fields. These deformations are governed by transient restructurization processes.

Typical flow curves of the ER fluid based on silica (diatomite) with concentration from 5 to 60% have been obtained (Fig. 5) on a rotational viscosimeter, traditionally used for these purposes. It is seen that in absence of field the flow curves are linear and pass through the origin, *i.e.*, the suspensions behave as Newtonian fluids. The slopes of the curves of σ *vs.* $\dot{\gamma}$ increase with particle concentration, thus reflecting an increase in plastic viscosity. With increasing electric field, the dependencies become nonlinear and steeper, which testifies to an increase of the resistance to deformation and, therefore, an increase in the effective viscosity. At low concentrations ($5\% < \varphi < 10\%$), the slope of the flow curves decreases in the region of higher shear rates $\dot{\gamma}$ and there is a transition to a flow with a completely destroyed structure. The dependence of the effective viscosity on shear rate typical of all pseudoplastic materials is shown in Fig. 6a, and, as a function of field, in Fig. 6b. From Fig. 5b it is seen that for such systems at high shear rates the curve of σ *vs.* $\dot{\gamma}$ qualitatively changes its form: a decrease of σ with increasing $\dot{\gamma}$ is observed. However, effective viscosity $\Delta\sigma/\Delta\dot{\gamma}$ values even at maximum shear rates of the order of 2500 s^{-1} exceeds the viscosity in zero field. This testifies to the considerable contribution of electric field forces to retardation of even individual particles of a completely destroyed structural skeleton. The developed flows of ER fluids in a channel-condenser (*i.e.*, duct flow) and the pressure created in a hydrocontour have been studied thoroughly by B. Gleb (Shulman, 1972b) using the model of plane plates, and by E. V. Korobko (Shulman and Korobko (Shulman, 1978) for two coaxial cylinders. The dependencies observed are qualitatively similar to the flow curves (Fig. 7); in particular the nonlinear variation of flow rate with pressure head at small flow velocities.

The yield stress recorded in rheometric experiments characterizes the stability of the structure in an electric field. On passing through the stability limit, the ER fluid turns from a solid-state suspension into a fluid. The yield stress σ_0 was measured by Korobko *et al.* (in press) in Couette shear in a rotary coaxial-cylindrical viscosimeter at both constant shear rate and constant shearing force. The values of σ_0 may be also determined from the sealing pressure drop across a valve with no flow in the contour. Figure 8 presents the typical square-law dependence of the yield stress on the magnitude of the applied field.

Rheological measurements have shown that flow development is preceded by an induction period of time t_0 during which no marked deformation is observed in the ER fluid. In the general case, t_0 increases with decreasing shear rate and increasing E. The dependence of this time (structure lifetime) on load in semilogarithmic coordinates is linear. Using the observed dependencies, activation energy values are calculated to be 77-80 kJ/mol. Such values are close to the energies of intermolecular bonds.

Under straining conditions, when $F/S < \tau_0$, the ER fluid is characterized by the same properties as a solid, in particular, by elasticity. Measurements elastic modulus of the ER fluid in an electric field have been conducted by a number of authors (Shulman *et al.*, 1989), with the aid of a vibroviscosimeter. Cyclic shear allows determination of the complex dynamic viscosity η^* by the measured values of the complex shear modulus $G^* = i\omega\eta^*$, where

$$|G^*| = \sqrt{G'^2 + G''^2} \tag{18}$$

G' is the storage modulus and G" is the loss modulus. Viscoelastic characteristics of ER fluids are presented in the form of logarithmic dependencies of G' and G" on field intensity (Fig. 9a). It is seen that, depending on the concentration of solid phase, the character of the curves and their slope changes. In weak fields, G" turns out to be larger than G', but with increasing E, G' grows and exceeds G", and eventually the difference between them attains a constant value.

The changes in G'and G" are most pronounced in the range $10\% < \varphi < 30\%$. For compositions with concentration $\varphi > 40\%$, the dependence of G" on φ attains a plateau, while G' continues to increase. The latter may well be explained by the increasing number of defects in the structural skeleton formed in the presence of an electric field in high-concentration systems, and the rise of elastic interactions when particles approach to form "bridges".

If we consider the correspondence of η and η^*, τ and G", considering the shear rate $\dot{\gamma}$ as equivalent to the frequency ω, then η^* values for ER fluids are higher than η over all the deformation frequency and shear rate ranges investigated (Fig. 10); however, at small $\dot{\gamma}$ and ω these differences disappear.

Large loads cause destruction of the structural skeleton. The transition through the strength limit, unlike the yield stress, is accompanied by a continuity break. Strength limits of ER fluids are determined at different electric field intensities, usually with laboratory set-ups which allow measurement of critical F values in both tangential displacement of electrodes (the workpiece and the base) and in vertical separation, as is shown in the schematic. Use has been made of solid and coplanar (alternating) base electrodes. From Fig. 11 it is seen that the dependence of the resistance to shear **F/S** on **E** is almost linear up to its saturation, and depends on the type of base, its roughness and the thickness of protective coatings. As a rule, the limiting force required to rupture the structure of an ER fluid for $F \parallel E$ is higher by an order of magnitude than the forces required for its shear ($F \perp E$).

The results presented above have been obtained for steady-state deformation regimes in which the structurization process has attained a certain level in the ER fluid, corresponding to a dynamic equilibrium between the mechanical forces and the structure-forming effect of the electric field. However, prior to attaining this state, a time dependence has been observed in all measured ERF parameters. Transient response of an ER fluid to an electric field has been studied by different methods (Shulman, 1974b; Blinkov 1989a; Shulman, 1972a; Rubanov, 1991). Thus a speckle-interferometric technique has allowed observation of particle fluctuations in ER fluids at rest when the transient processes are attributed only to the ratio of the polarization energies and to thermal motion. Response times of ER fluids under in these conditions is ca. 10^{-4} s. Considering ER fluid flow in a channel-condenser, G. M. Blokh (Report, 1980) observed variation of pressure with time as presented in Fig. 12. Characteristic minimum time ranges from 10^{-3} to 10^{-1}s, and depends on flow velocity and electric field intensity. It may be assumed that the time to reach steady state is determined by two mechanisms of structural organization of ER fluid elements, *i.e.*, a fast mechanism associated with dipole orientation of particles along the field vector and a slow mechanism due to structure rearrangement by the shear flow.

Prior to attaining dynamic equilibrium, time effects manifest themselves in ER fluids in the form of thixotropic properties. Thus in continuous shear in a rotational viscosimeter at constant intensity E (Fig. 13), one can see the irreversibility trend of the curves of τ *vs.* $\dot{\gamma}$ when an increase of shear rate is followed by a decrease (thixotropic loop). Similar behavior has been observed also for the dependencies of τ on E. For ER fluids with high content of solid phase, a discrepancy is observed between τ_0 values before applying an electric field and after switching it off. This testifies to the relaxation behavior of the formed structure. An analysis has been made of the thixotropic damage to the structure after switching off an electric field during continuous and cyclic deformation regimes. The thixotropic properties of ER fluids have been followed by change of the parameters G' and G" with time t (Fig. 14) recorded at small deformation amplitudes.

It is seen that the storage and loss moduli decrease abruptly, reflecting the failure of the skeleton of the ER fluid. The rate of variation of the moduli G' and G", as well as viscosity and time of thixotropic failure, depend on the stress history of the ER fluid. Its response to an alternating electric field (Fig. 15) indicates that, at small Mn numbers ($\dot{\gamma} < 200\ s^{-1}$), the specific rheological features are associated with a polarization rate attributed to the time of particle recharging and of irreversible ionic charge transfer.

The ER effect is, first of all, the dependence of the rheological properties on electric field. However, polarization and structurization caused by the field lead also to changes in other physical properties of ER fluids.

Electrical Properties

Typical ER fluids have d.c. electrical conductivities of ca. $\kappa = 10^{-10}\Omega^{-1}m^{-1}$ at room temperature. A correlation is traced between variations of conduction and rheology of ER fluids against the applied voltage (Fig. 16). The specific features of the influence of

temperature and shear rate on the current through an ERF layer are seen from Figs. 16b, 16c and 16a. Data on the dependence of electrical properties on shear rate are contradictory. This is likely to be associated with different participation of charge-carriers of various types in the transfer process.

Dielectric properties of ER fluids have been the subject of many investigations (Shulman, 1972a; 1985a; Block and Kelly, 1988). All these studies show that various polarization mechanisms are possible. Each is characterized by its own response time and intensity. At low (10^2 - 10^4 Hz) frequencies, the peak of dielectric losses is usually fixed; its position is related to the amount and type of activator on the particles. It is caused by interphase polarization and ionic transfer. At high frequencies, dipole polarization is important. High current (high conduction) as a rule leads to unjustifiable energy loss for obtaining the required mechanical strength. Thus, to attain 1 kN the energy consumed is 1 kW.

Thermophysical Characteristics.

Structural changes in ER fluids are accompanied by changes of their thermophysical properties. It has been established that the heat capacity of ER fluids remains unchanged in the field, while their heat conduction increases in an anisotropic manner (Demchuk, 1974). The degree of dispersivity, the character of packing and material properties of the particles, as well as the form, size and geometry of their contacts plays a role equally as important as the electric field intensity. Thus for 5% silica in mineral (transformer) oil throughout the working range of fields, the maximum increase of the effective thermal conductivity was 280%. Experiments have shown that the higher the concentration of the solid phase, the higher the ER fluid's thermal conductivity (Fig. 17a). The dependency of thermal diffusivity on electric field intensity is of the same character.

Changes in shear and thermophysical characteristics of ER fluids lead to dependence on electric field also in the case of convective heat transfer in channel-condensers (duct flow). Fig. 17b shows the field effect on the relative heat transfer coefficient in a coaxial-cylindrical heat exchanger (Shulman and Korobko, 1977). This example as well as the results of Shulman *et al.* (1978c) point to the feasibility of designing heat ER-controlled heat exchangers.

Acoustical and Optical Characteristics.

Wave processes in ER fluids are still a matter of study. Only a few works are known which are devoted to theoretical analysis of the regularities of ultrasound propagation in ER fluids (Korobko and Zavitrak, 1991) and experimental confirmation of the expected results (Korobko and Chernobai, 1985). Thus it is shown (Fig. 17c) that the relative sound velocity $\Delta C/C$, with the vectors E and C normal to one another, increases by 0.7 to 1% in an electric field. The absorption coefficient, the frequency dependence of which represents a smooth curve in the range 1-10 Mhz, changes anistropically.

Optical characteristics in low-concentration silica-base ER fluids were studied by Blinkov *et al.* (1989) and Gleb (1974). It is shown that the light transmittivity depends almost linearly on the applied voltage (Fig. 17a).

V. Applications of the ER Effect

Engineering and technological aspects of ER fluid applications are quite diverse and numerous. The ER effect makes it possible to unite effectively the advantages of low-power electrical control signals with high-power hydraulic actuating mechanisms. The important specific feature of such devices is the absence of moving mechanical elements, simplicity of design and fast response.

Traditional devices are as follows:

1) Devices to regulate flow of fluid pumped through a channel-condenser (duct).
2) Anti-vibration dampers.
3) Clutches, friction elements and fixtures.

The devices of the first type make it possible to change the friction at a surface within wide limits by varying the strength of an electric field and its orientation relative to the channel walls. At the same time, they possess high potential for control of flow patterns and primarily of hydrodynamic resistance. This method is suggested also to control thermal boundary layers, and may serve as an effective means to control temperature fields and heat transfer characteristics in tubes, channels and other thermal equipment.

The forces of interaction between fields and fibrous materials (Korobko, 1991a) may be used, for instance, in the textile industry for orientation and stretching of threads, transfer of directed fibers, their separation with respect to length and other parameters.

The main elements of the first series of devices are ER valves, consisting of stacks of electrodes creating a resistance to fluid flow and controllable by means of an electric field. W. Bullough and I. Stringer (1977) developed and patented hydraulic devices based on flat and coa· 'al-cylindrical valves.

Researchers of vibrotechnology at the Kaunas Polytechnical Institute, collaborating with Prof. Z. P. Shulman (Minsk, Heat and Mass Transfer Institute of the Byelorussian Academy of Sciences), have designed an ER valve of the disc type (Malishauskas, 1981) (Fig. 18b). In Minsk, we have designed a new model of a screw valve (Shulman, 1978b). Its electrodes are fabricated in the form of strip-type helical springs which allow several times greater outlet pressure drops across the valve to be obtained without changing overall dimensions of previously used flow-through valves.

Fig. 19 displays results of experiments concerned with measurement of flow rate characteristics for a flow channel in which a system of electrodes in the form of a coaxial-cylindrical or spiral valves is embedded (Korobko, 1980). In the absence of an electric field,

the pressure head increases linearly, *i.e.*, the flow rate is proportional to the pressure. With an applied electric field, the flow rate *vs.* pressure head curve is nonlinear over the whole flow rate range (Fig. 19). For instance, at E = 2 kV/mm it is nonlinear up to an inflection point corresponding to a flow rate of 18 cm^3/s, followed by section with less intensive pressure rise. (Q = 18 to 22 cm^3/s). In the range 22-44 cm^3/s, the pressure increases more rapidly. At E = 3 kV/mm, these regions are distinctly seen to be displaced toward higher flow rates. The effective pressure drop, *i.e.*, the portion of pressure head losses due to the electric effect on an ER fluid, has its maximum corresponding to a certain flow rate. As E increases, the maximum is displaced toward higher Q-values.

The information obtained on properties of ER suspensions has served as the basis for design and commercialization various efficient and low-cost devices and apparatus of a new type. Through direct application of an electric field to a working medium (without intermediate transformations), traditional mechanical, electromechanical and other devices have been successfully replaced by simple ER devices offering a convincing advantage in speed of response, service life, output characteristics (force, frequency), consumed energy, *etc.*

A number of devices have been proposed based on screw and coaxial-cylindrical valves. Among them is a pump for pumping a dielectric suspension, presented in Figure 20 (Blokh and Korobko, 1977). The cylinder houses two valves (3 and 4). Suction valve 3 may reciprocate, being actuated by drive 1, while the other pressure valve 4 is rigidly fixed in the cylinder and maintains pressure in the discharge system. With the suction valve displaced toward the discharge valve, the necessary electric voltage is applied to the suction valve, thus providing a maximum increase of the effective viscosity of the ER suspension until it gels. Functioning as a piston, the valve forces the fluid in the intervalve volume through the discharge valve into the system. When the suction valve attains point d, voltage is applied to the discharge valve, thus preventing a pressure drop in the system, while the suction valve is deenergized. In reverse motion, the working fluids flow through the suction valve and fill the intervalve volume. In this manner, the suspension is repumped by repeating the above cycles. Flow rate and pressure in the system may be regulated by varying the applied voltage.

Use of valves has permitted the inventors Shulman *et al.* (Certif. 724220, 19??) to use a more efficient hydrovibrator than the designs known in the West (Fig.21). Use is made of the extra ER-distributor 1, combined with only one pump, to ensure an appreciable reduction in total energy consumption. In addition to the cited examples, ER valves can effectively be used in servo systems (Shulman, 1979d) (Fig. 22), fluid oscillation generators (Shulman, 1977d) (Fig. 23), seals (Shulman, 1979e), (Fig. 24a) batch boxes (Shulman *et al.*, 1979b) (Fig. 24b), and in many other applications.

ER fluids may be also used in other valve-free hydraulic devices, for instance, in a peristaltic pump (Shulman, 1979c) (Fig. 25), in which electrodes are located along a flexible hose, or in an axial pump (Shulman, 1983) (Fig. 26), where wheel blades are isolated from a hub and connected alternately to different poles of a power supply.

ER valves may be also used for designing various damping and antishock devices (Shulman, 1983). One of them is a brake actuator (Fig. 27). Electric motor 1 brings rotor wheel 2 into operation to make the suspension move through cylinder 3, ER valve 4 and pumping channel 6, to the cylinder inlet under the rotor wheel. When an electrical voltage is applied, the valve, working as a piston, moves together with stem 5 which is rigidly connected to it. The stem transfers the forces to the linkage of the brake. Deenergizing or energizing the valve electrodes at the required moment of time allows ready and easy control of the brake. In this operation, the time of response to the electrical impulse does not exceed 0.05 s.

Different constructions of shock absorbers and oscillation dampers are presented in inventions by Shevchenko *et al.* (1988) and by Mamontov *et al.* (1984). For instance, to provide remote frequency tuning of a seismoreceiver by regulating the rigidity of its elements, the elements are placed into vessels filled with an ER fluid in which electrodes are also placed (Shevchenko, 1988). A disc arrangement to damp torsional vibrations is presented in Fig. 28 (Mamantov, 1984). The effectiveness of using ER valves was also confirmed for a viscous friction model in the passive vibroprotection system of Fig. 29, investigated by Shulman *et al.* (1987a). Comparative characteristics in the regime of free and forced oscillations are presented in Fig. 30. They testify to a more effective decrease (5-6 times) of the oscillation amplitude X by 20 Db. Resonance characteristics for different electric intensities (forced oscillations) are presented in Fig. 31. A drastic increase of X is seen until it coincides with the inlet amplitude X_1, *i.e.*, with the aid of the external process, it is easy to attain zero displacement of the object in the coordinate system of the base. Tests of the effectiveness of this method in the vibroprotection system of an electron microscope column (mass = 500 kg) have produced positive results (Shulman *et al.*, 1986b).

Thorough studies of ER fluids in the damping systems of tractors have been performed by Mironov *et al.* (1966). Clutches, gear boxes, clamping devices to fix workpieces under machine tools, and arrangements for position fixation employ the transitions of ER fluids subjected to an electrical field, from fluid to quasi-solid state, at specific loads F/S less than the yield stress σ_0. The clutches described at length by Shulman *et al.* (1985c), Kordonsky *et al.* (1991b) and Blokh *et al.* (1983) may find application, *e.g.*, in the textile industry to provide the required tension of threads. ER clutches used in ventilation systems make it possible to appreciably increase their economic efficiency. For instance, as is shown in Fig. 32, wind-driven motor 3 causes the ER clutch, stabilizer generator 6 and the working wheel of the fan to rotate. The generator produces high-voltage electric current which enters bushing 5 of the clutch-stabilizer, where an electric field is induced. Since the ER suspension changes its viscosity with the electric field strength (and hence resistance to rotation of shaft 10 also changes), then with change in the electric field the rotational speed of the shaft controlling the generator potential changes as well. In particular, the higher the rotational speed (*e.g.*, due to increasing wind force), the higher are the electric potential generated by generator 6 and the mechanical resistance of the ER fluid, so that operation of the fan wheel and its efficiency are stabilized automatically. The increase in economic efficiency of the described ventilation system is explained by the fact that the electric energy is used here only for control (or not used at all).

ER technology applied to fixation of workpieces under mechanical treatment of their surfaces has also proved to be effective. A fixture for flat monolithic workpieces subjected to finish processing is shown in Figure 33 (Korobko, 1991b). Anodized disk 2, ER fluid layer 3, workpieces 4 and guard cover 5, ensuring radial support of the workpieces, are arranged on horizontal chuck 1 of a lathe. An electric field from power source 6 is induced between the anodized disc (the base) and the workpiece. During processing, the flat sample is affected by forces directed along it and perpendicular to its surface on the side of the tool and the suspension. *Via* a system of current collectors, electrodes are connected to the power source with a specially designed control unit. This fixture arrangement allows determination of both horizontal and vertical displacement of the workpiece over the chuck surface. The speed of chuck rotation is measured by a photoelectric sensor which responds to light beam passage through a hole in a disc mounted on the motor shaft. Critical values of the rotation speed, at which displacement of the workpieces takes place, *i.e.*, the upper efficiency limit of the suggested method, have been determined in the worst case, namely, at the maximum distance from the chuck center, *i.e.*, at the maximum shearing force F. Flat circular workpieces (copper, aluminum) with grade 8 roughness of the base surface are placed on a 50 μm thickness ER fluid layer and lightly pressed against the surface. It has been established that the force of workpiece adhesion to the rotating chuck base is maximal when a solid electrode is used. Planar electrodes have allowed critical values of the rotation speed to be decreased by 20 to 30% for the entire range of electric intensity.

Mechanical treatment (precise sharpening) of workpieces fixed with the aid of an ER fixture was performed under industrial conditions. The depth of cutting did not exceed 30 μm. First the workpiece face was processed by a steel cutting tool, while finish treatment was carried out by a diamond tool until a grade 14 surface was achieved (Fig. 34).

Unlike the above conditions of processing monolithic workpieces, the problem of processing thin-wall nonrigid constructions (envelopes, various vessels, panels, etc.) requires taking into account the compliances of intermediate links (the lathe, the fixture, the tool, the workpiece) and their sensitivity to elastic strains and vibrations. The feasibility of increasing the precision of processing of end-face planes of thin-wall constructions was experimentally checked on a setup shown in Figure 35a. (Yas'ko, 1989). Construction 1 to be processed was a thin-walled shell of revolution made of an aluminum alloy and butt-welded. Construction 1 was fastened on chuck 2 of a vertical lathe with the aid of strips 3. ER fixture units 4 coated with a 60% diatomite ER suspension were brought into contact with the shell of construction 1 and fixed by clamp of racks 5 mounted on pedestals 6. The clamps are presented in Fig. 35b. They represent a packet of aluminum-alloy electrodes with interbedded dielectric plates. Its bearing surface was processed following the surface contour of workpiece 1. The packet is fixed in cavity 6 of metallic base 5 with the aid of epoxy compound 3, which serves also as insulation between the metallic base and the electrodes (Deryagin, 1934). High voltage was applied to ER fixing units from power source 4 connected *via* a collector to the 220 V mains. When an electric field was applied to the fixture units, the effective hardness of the ER fluid in the gap between the ER fixture device and the construction appreciably increased, and workpiece 1 remained fixed in the setup.

The absence of deformation of the thin-wall construction during fixing and the contour of its face plane were controlled by an indicator set in the lathe bed.

In experimental works a 5 to 10-fold increase of precision (contour) of processing of end plates was achieved, as compared to the precision attained presently in industrial equipment in which structural elements are used to fix a nonrigid construction.

The problem of optimal fixture of an object to be processed becomes more complicated if the object has a complex shape in addition to its nonrigid construction. Based on the simple model of a hydrocylinder, the system of Fig. 36 was designed to increase rigidity of blades (Shulman *et al.*, 1991). It consists of a bracket with an attached cowling, inside of which ring 1 is mounted on movable supports (Fig. 36). The ring houses two sectors in inner cavities to which cylindrical bodies and movable rods 2 are rigidly fixed. The cavities are filled with ER fluid 3. Voltage from a power source is supplied to the bodies and rods. The bracket is mounted on the guiding frame of the machine. The casing of the arrangement rotates on frames relative to the cowling. Blade 4 to be processed is located between sectors of the fixture. Rods are pressed to its surface. A specific feature of the design is the feasibility of adapting the fixture elements (rods) to a blade tongue having spatial deflection. When an electric field is applied to the ER fluid between the hydrocylinder and the spring-actuated rod, a cohesive force arises on their surfaces and there occurs reinforcement of the blade within the limits of elastic strain of the ER fluid layer or of the blade itself, which is characterized by the ability of the whole construction to resist external forces and, when their action ceases, to restore its initial parameters. It has been established that the ER fixture, applied as a support, allows a decrease of blade deflections at the control points up to 30%, which permits a considerable decrease of the dynamic component of the processing error.

The ER fixture technology may be also applied in robotics. Presently three types of gripping devices are used, namely, mechanical, vacuum and magnetic. Their selection is specified by the dimensions, continuity and material mass of the workpiece. Mechanical gripping devices are limited by the thickness of the workpiece. Vacuum gripping devices are restricted by the continuity (*e.g.*, no perforations) and the condition of the material surface, while magnetic gripping devices are limited by material properties. Experience has shown that a thin-sheet billet (workpiece) made of nonmagnetic or dielectric material through which holes were bored during mounting or after preceding operations is not transportable by using the above gripping devices.

In small-scale and multiproduct production, changing a gripping device requires much time, while manufacture of individual gripping devices for each type of workpiece increases the cycle of preparation procedures and requires considerable consumption of materials. Therefore the design of multipurpose gripping devices possessing minimal weight and providing the feasibility of gripping and transporting flat and bulky workpieces is one of the urgent problems in robots in many spheres of production and, in particular, in sheet-stamping.

A schematic diagram of an ER gripping device is shown in Fig. 37 (Gorodkin, 1974). Electrodes 1-5 in the form of plates having a special coating are embedded flush with a base which is mounted to body 9. The base and the body are manufactured from a high-resistivity material. The body is connected to a holder which is fastened to the arm of a gripping device. A layer of an ER suspension is applied to the base and the electrodes. When the ER gripping device comes in contact with the workpiece, electrodes 1-5 are energized. At this moment, the apparent viscosity of the ER suspension between the working surfaces of the gripping device and the workpiece substantially increases, and the workpiece adheres reliably to the gripping device. Other designs of gripping devices are known in which an ERF is used in a drive unit (Sorodkin, 1974) or in the cavity of flexible gripping jaws (Fig. 38). In the latter device, the pressure in the cavity changes with the applied electric potential (Bansyavichyus, 1983; Shvartsman, 1983; Shulman, 1985b; Khutsky, 1988).

Acoustic properties of ER fluids may be used in the design of filters and delay lines and for other purposes (Shulman, 1982b; Bulakhov, 1989; Dobryansky, 1988; Shulman 1982a). Thus, for example, at the Kiev Research Institute of Otolaryngology an ultrasound finder (Fig. 39) was designed in 1982 (The Ultrasonic Finder, Certif. 930106, 1980), in which the sectional electrodes of a damper are immersed into an ER fluid. Voltage variation across them allows control of the directional pattern and increase of the selector's effectiveness. An interesting trend is the use of ER fluids as color films, whose optical properties are specified during their casting in an electrical field (Shulman *et al.*, Certif. 1014450, 1976).

The torque exerted on a dielectric body placed in a rotary electric field (Shulman and Nosov, 1985) was employed by Karpov *et al.* (1960) to design a dielectric motor. It is known that an asymmetric dielectric body with its axis perpendicular to the field becomes polarized when placed between capacitor plates; it acquires a certain orientation and tends to be attracted by the nearest electrode. If a polarized cylindrical body having a fixed axis of revolution is turned by some initial angle, it starts rotation due to the electric torque. Such a motor (Fig. 40a) is assembled of plexiglass body 4 in which ruby thrust bearing 3 is fixed. Hardened metallic needle 2 of the dielectric rotor rests on this bearing. The upper part houses the second support, *i.e.*, miniature bearing 5. An electric field is imposed on metallic electrodes 7. Cylinder 8 is filled with ER fluid 9. The motor's efficiency increases appreciably when multisectional electrodes are used (Fig. 40b). Such motors may be used in designing low-power stirrers, drives for high-speed discs, sprayers of liquid, or fans. Use of a rheoelectric motor is promising for mixing in a gaseous medium to produce aerosols. The absence of collector brushes, magnetic circuits or windings, its reliable air-tightness, capability of withstanding high pressures, and adaptability to differing spatial lay-outs make such rheoelectric engines promising for drives or actuators in dangerously explosive production situations not permitting use of traditional electric machines (Shulman *et al.*, Certif. 591750, 1976; Shulman *et al.*, Certif. 1014450, 1982b). Of interest is application of the electrodilatancy phenomenon observed in ER fluids for designing an electrostatic relay (Shulman *et al.*, Certif. 1363323, 1986) or a sealing unit (Shulman *et al.*, Certif. 694710, 1979e).

ER fluids can be used not only in actuators, to convert one form of energy into another, *e.g.*, electrical into mechanical (Shulman and Nosov, 1985) or rotational into translational (Bansyavichyus *et al.*, Certif. 1359528, 1987), but also as indicators and sensors in different production processes. Thus variation in the parameters of an external medium, *e.g.*, vibration level, temperature or voltage may be followed through a change in conduction (Shulman *et al.*, Certif. N1387664, 1987b). Rheological characteristics in the presence of an electric field may be sensitive to composition of an ER fluid, *i.e.*, to moisture content or percentage of a solid phase (Nosov, 1975). A differential method permits design of laboratory devices such as viscosimeters to measure various characteristics of a wide range of unknown materials (Shulman and Nosov, 1981).

Future studies of the ER effect, mainly at the Heat and Mass Transfer of the Academy of Sciences of Belarus, will be concerned firstly with developing the complete kinetic theory and using more highly perfected experimental methods to study the physical properties of ER fluids to analyze their structure on a microlevel. Secondly, the works will continue to study physico-chemical processes of ER fluids and to create highly stable compositions, based particularly on polymeric materials. In collaboration with ERF users (entrepreneurs, ministries), it is also planned to develop and bring to a commercial level ER effect technologies and devices in mechanical engineering, robotics, aircraft industry, transportation, *etc.*

VI. Conclusions

One of the most important reasons for an optimistic faith in the future of ER fluids is their promising use in energy conservation. However, no total economic estimates are presently available, since direct calculation depends on the concrete design of ER devices, conditions of their use at production sites, and the mastery level of designers.

The advantages of a hydraulic system which responds quickly to low-power electric control signals and requires no supplemental elements (mechanical, electromechanical), as well as the accompanying changes in electrophysical properties of ER fluids which simultaneously allow their use as indicators, provide the basis for designing low-cost effective power hydraulic systems with automatic control.

Dielectric motors, liquid power generators and motion converters are, in principle, novel energy-saving devices consuming a minimum of electric energy. Indeed, despite the high voltages required (of the order of kilovolts), the power consumption is only ca. 0.1 to 1 watt, due to the semiconducting properties of the working media (currents of ca. 10^{-4} amperes). For the same reason, improvement in various heat-exchangers of the conductive and convective capabilities of ER fluids in the presence of an electric field allows energy saving when cooling objects or transferring heat to other objects.

Exploitation of available technological procedures using ER fluids (for instance, to fix workpieces subjected to mechanical processing) also indirectly saves energy due to decrease in expenditures for manufacture of mechanical fixtures (clamps, grips) or magnetic and

vacuum fixtures which possess limited capabilities (applicable only to or magnetic materials or unperforated workpieces).

Also, use of ER fluids makes it possible to achieve a new level of quality in the execution of many production operations, levels previously attainable only at the high cost.

All of the above reasons support the importance of further development of ER technologies. However, this requires careful selection of subjects and spheres of use, because there still exist such negative factors as narrow temperature range, insufficient stability of ER fluid properties, *etc.*, which exert an adverse influence on the more widespread application of ER technology.

REFERENCES

Bansevichyus, R. Yu., A. Yu. Klyuchinankas, and Ya. Z. Kolovsky. The Shock-Absorber. USSR Author's Certificate 597884 (1978).

Bansyavichyus, R. Yu., K. M. Ragul'skis, and V. K. Ulodas. The Manipulator's Gripper. USSR Author's Certificate 1009756 (1983).

Bansyavichyus, R. Yu., K. A. Karimov, and K. M. Ragul'skis. The Converter of Rotational to Translational Motion. USSR Author's Certificate 1359528 (1987).

Bartenev, G. M. *Strength and Mechanics of Polymer Fracture*, M: Khimiya, p. 236 (1984).

Bibik, E. E., I. S. Lavrov, and O. M. Merkushev, *Kolloid. Zh.* **30**, 494-502 (1968).

Bibik, E. E. and V. E. Skobochkin. *J. of Enginer. Phys.* (Russian), **22**, 687-692 (1972).

Bibik, E. E., V. E. Skobochkin, and I. S. Lavrov. An Influence of a Magnetic (Electric) Field on a Structure and Rheological Properties of Disperse Systems. *Electron. Obrabotka Materialov*, 53(5):49-51 (1973).

Blinkov G. H. and E. V. Korobko. Visualization of Structural Changes in Disperse Electrosensitive Systems. *Improvement of Experimental Methods of Investigation of Physical Process*, Leningrad: Sudostroeniye, pp. 110-114 (1989).

Blinkov, G. N., N. A. Fomin, V. K. Gleb, E. V. Korobko, and Z. P. Shulman. Diagnostics of Field-Induced Structural Changes in Disperse Electrosensitive Systems. *Book of Abstracts 5th International Symposium on Flow Visualization*, Prague, (August 21-25, 1989).

Block, H. and L. Kelly. Electrorheological Fluids. *UK Patent*, 2170510 A (1986).

Block, H. and L. Kelly. Electro-Rheology. *Journal of Physical Design: Applied Physics*, 21:1661-1677 (1988).

Blokh, G. M. and E. V. Korobko. The Pump for Pumping Dielectric Suspensions. USSR Author's Certificate 606001 (1977).

Blokh, G. M., V. K. Gleb, G. I. Sidorova, and I. V. Bukovich. The Electrorheological Clutch. USSR Author's Certificate (1983).

Blokh, G. M., B. Yu. Chelikman, R. G. Gorodkin, et al. The Composite Responding to an Electric Field, USSR Author's Certificate 1390235 (1988).

Brown, W. Electric and Magnetic Forces. A Direct Cultivation I. *American Journal of Physics*, 19(5):290-304 (1951).

Bulakhov, L. M., L. N. Danilevsky, E. V. Korobko, and Z. P. Shulman. The Method to Create Acoustic Contact in Ultrasound Measurements. USSR Author's Certificate 1525570 (1989).

Bullough, W. A. and J. D. Stringer. Direct Flow Control by Electric Fields. *Hydraulic and Air Engineering*, 9:11-14 (1977).

Deinega, Yu. F. and T. V. Vinigradov, 1962, *Dokl. AN SSR*, 143(4):898-901; 1967, 174(2):398-401.

Deinega, Yu. F. and V. N. Shilov. *Rheology of Polymer and Disperse Systems and Rheophysics*, 2:65-72 (1975).

Deinega, Yu. F., K. K. Popko, and N. Ye. Kovganich. An Influence of Strong Electric Fields on Rheological Properties of Hydrocarbon-Base Disperse Systems. *Physical-Chemical Mechanics and Lyophility of Disperse Systems*, Kiev, 10:85-98 (1978).

Deinega, Yu. F., N. Ya. Kovganich, and K. K. Popko, *Electron. Obrabotka Materialov*, 1:41-43; 1979, 8:38-42 (1985).

Deinega, Yu. F. and V. N. Shilov. Structurization of Disperse Systems in Electric Fields. *Rheology of Polymer Systems and Rheophysics*, Z. P. Shulman and E. V. Korobko, eds., Minsk, ITMO AN BSSR Press, Part 2, ppa. 56-64 (1986).

Deinega, Yu. F. and V. R. Estrela-Liopis. To the Theory of the Electrorheological Effect. *Abstracts of the XV All-Union Symposium on Rheology*, Odessa (1990).

Demchuk, S. A. and E. V. Korobko. Measurement of Thermal Conductivity of Electrorheological Suspensions in an Electric Field. *Rheophysical Studies*, Z. P. Shulman, ed., pp. 62-67 (1974).

Deryagin, B. V., *et al.*, 1934 *Zhurn. Fiz. Khim*, 8(5):416-422 (1934), 9(5):1167-1175 (1935), 10(6):1306-1314 (1936).

Deryagin, B. V. Studies in the Field of Surface Forces. *Nauka*, Moscow (1964).

Dobryansky, V. M., A. S. Rubanov, I. N. Lobanok, E. V. Korobko, *et al.* The Chamber for Acoustic Measurements in the Presence of a Longitudinal Electric Field. USSR Author's Certificate 1610426 (1988).

Dzhuvarly, Ch. M., G. V. Veichkhaizer, and V. Ya. Shteinshraiber. *Electron Obrabotka Materialov*, 6 (1969).

Efimov, B. F., Z. P. Shulman, and R. G. Gorodkin. A Study of the Effect of Foreign Technological Inclusions on Qualitative Characteristics of High-Concentration Electrorheological Suspensions. *Vesti AN BSSR, Ser. Fiz.-Energ. Nauk*, 4:123-127 (1976).

Ermolenko, I. N., Z. P. Shulman, T. G. Lazareva, and E. V. Korobko. Electrorheological Effect on Titanium Dioxide Suspension in a Polymer Binder. *Dokl. AN BSSR*, 31(10):906-909 (1987).

Ermolenko, I. N., T. G. Lazareva, E. V. Korobko, and M. M. Ragotner. Film-Forming Electrosensitive Composites Based on Metal Oxides, *Dokl. AN BSSR*, 9:812-819 (1990a).

Ermolenko, I. N., T. G. Lazareva, and E. V. Korobko. Film-Forming Composite. *Positive Decision for Inventor's Application* 4750609 (1990b).

Estrela-Liopis, V. R. and V. V. Dudnik. Multipole Theory of Electric Conductivity of Concentrated Suspensions of Charged Colloid Particles. *Kolloid. Zhurn.*, 49(1):110-115 (1987).

Fuks, G. I. Proceedings of the 3rd All-Union Conf. on Colloid Chem., Moscow, p. 301 (1956).

Gindin, L. G. and I. N. Putilova, *Kolloid. Zh.*, 16(5):322-325 (1954).

Gindin, L. G., A. E. Volpyan, I. F. Galkin, and V. E. Gul. Physicochemical Mechanics of Disperse Structures, 83-96 (1956).

Gindin, L. G., A. E. Volnyan, I. F. Galkin, and V. E. Gul, 1965, 162(4):839-844; 1950, 71(1):81- .

Gindin, L. G. and A. E. Volpyan, *Uspekhi Khim.*, 37(1):130-136 (1968).

Gleb, V. K. The Constant Electric Field Effect on Optical Characteristics of Electrorheological Suspensions. *Rheological Studies*, Z. P. Shulman, ed., Minsk: AN BSSR Press, pp. 76-86 (1974).

Gleb, V. K. Rotary Viscosimeter. USSR Author's Certificate N 976349 (1982).

Gorodkin, R. G., V. K. Gleb, and E. V. Korobko. Gripping Devices. *Proceedings of the III All-Union Conference on Robots*, Voronezh, USSR, pp. 51-52 (1974).

Gorodkin, R. G., V. K. Gleb, and E. V. Korobko. Rheological Studies of ER-Suspensions in an Electric Field. *Rheology of Polymer Systems and Rheophysics*, ITMO AN BSSR Press, Minsk, pp. 4-10 (1975a).

Gorodkin, R. G., E. V. Korobko, and V. K. Gleb. Rheological Studies of ERF in an Electrical Field. *Rheology of Polymer and Disperse Systems and Rheophysics*, Z. P. Shulman and E. V. Korobko, eds., Minsk: ITMO AN BSSR Press, pp. 40-47 (1975b).

Gorodkin, R. G., T. A. Demidenko, and Z. A. Novikova. Electrorheological Suspension, USSR Author's Certificate 1566712 (1990).

Johnsen, A. and H. Rahlek. *Journal of the Institution of Electric Engineers*, 61:713-718 (1923).

Karapetyan, M. A. An Electric Field in a Disperse System With an Account of Surface Conductance of Inclusions. *Electron. Obrabotra Materialov*, 52(4):64-66 (1973).

Karpov, Yu. S., V. A. Krasnoperov, *et al.* On Motion of Dielectrics in an Electric Field. *The Physics of Dielectrics*, Moscow, pp. 124-131 (1960).

Kasparaitis, A. I., M. A. Malimauskas, *et al.* The Active Vibration. Damping Device. USSR Author's Certificate 945516 (1982).

Khutsky, G. I., K. V. Plyugachev, *et al.* The ER-Gripper. USSR Author's Certificate 1445949 (1988).

Kim, A. A. Electrorheological Properties of Ferrosuspensions. *Rheology of Polymer and Disperse Systems and Rheophysics,* Z. P. Shulman, ed. Minsk: ITMO AN BSSR Press, pp. 88-96 (1975).

Kordonsky, V. I., E. V. Korobko, and T. G. Lazareva. Electrorheological Polymer-Base Suspensions. *Journal of Rheology*, 35:1427-1436 (1991a).

Kordonsky, V. I., M. M. Ragotner, E. V. Korobko, and G. V. Zazonova. The Electrorheological Clutch. USSR Author's Certificate 1663261 (1991b).

Korobko, E. V., A. A. Mokeev, A. A. Kolik, M.M. Ragotner, and I. V. Bukovich. Investigation of Performance Characteristics of ER-Valves. *Proceed. of the 2nd Intern. Technology-Transfer Congress: Actuator-90*, Bremen, pp. 191-194 (1980).

Korobko, E. V. and I. A. Chernobai. A Study of the External Electric Field Effect on Ultrasound Propagation in Rheological Suspensions. *Journal of Engineering Physics*, 48(2):219-224 (1985).

Korobko, E. V. and A. A. Mokeev. The Electrorheological Effect in Activated Suspensions. *Journal of Intelligent Materials and Science*, 2(1):25-37 (1991).

Korobko, E. V. and S. T. Zavitrak. Electric Field Effect on Acoustic Characterization of ERS. *Abstracts of Electrorheological Conference*, R. Tao, ed., Carbondale, Ill., p. 36 (October 15-16, 1991).

Korobko, E. V., B. I. Dubkova, and M. M. Ragotner. Electrorheological Properties of Suspensions Dispersion Reinforced with a Fibrous and Powered Components. *Proceedings of the 6th National Conference on Mechanics and Technology of Composite Materials*, Sofia, pp. 9-12 (1991a).

Korobko, E. V., M. M. Ragotner, R. G. Gorodkin, and I. V. Bukovich. An Electrorheological Fluid as an Element in Clutches. *J. of Intelligent Material Systems and Structures*, 2(2):215-227 (1991b).

Korobko, E. V., V. E. Dreval, Z. P. Shulman, and V. G. Kulichubin. Peculiar Features in the Rheological Behavior of the ERS. *Rheological Acta*, in press.

Kovganich, N. Yu. F. Deinega, K. K. Popko, and A. S. Petruk, *Ukrain. Khim. Zh.*, 12:1237-1240 (1977).

Kovganich, N. Ya., E. B. Fomenko, and Yu. F. Deinega. A Working Medium for an Electrorheological Fixing Unit, USSR Author's Certificate 688509 (1979).

Landau, L. D. and E. M. Lifshitz. The Concise Course of Theoretical Physics. *Electrodynamics*, Vol. 1, Moscow: Nauka, p. 272 (1969).

Landau, L. D. and E. M. Lifshitz. *Theoretical Physics*. Moscow, Nauka, Vol. 8, p. 624 (1982).

Lazareva, T. G., E. V. Korobko, et al. *Vest. AN BSSR, Ser. Fiz. Teckh. Nauk*, 5:22-25 (1990).

Lazareva, T. G., E. V. Korobko, M. M. Ragotner, and I. F. Alilov. A Study of the Electrorheological Activity of Polymer Filler-Based Dielectric Suspensions. *Kolloid. Zh.*, 1:141-146 (1991).

Lavrov, I. S., O. M. Markushev, and O. A. Morozov, *Zh. Prikl. Khim.*, 10(2):387 (1967).

Lavrov, I. S. and O. V. Smirov, *Zh. Prikl. Khim.*, 10(7):1954-1959 (1969a).

Lavrov, I. S. and O. V. Smirnov. The Scientific-Technical Conference at the Leningrad Technological Institute, Section of Inorganic and Physical Chemistry:85 (1969b).

Lifshitz, E. M., 1954, *Dokl. AN SSSR*, 97(4):643ff; 1955, 100(5):879.

Makatun, V. V. and D. Vorobiev. Electrorheological Effect in the Dielectric Fluid-Organic Semiconductor System. *Proceed. of the 2nd Intern. Confer. on ERE, N. C.*, pp. 184-190 (1989).

Makatun, V. N. and D. W. Vorobyev. ER Fluid: New Dispersed Phases, p. 13 (1991).

Malishauskas, M. A., D. I. Markshaitis, et. al. The Electrorheological Controllable Valve, USSR Author's Certificate 8856602 (1981).

Mamontov, A. V., Yu. G. Khizhnyak, and L. L. Lishke. The Device to Damp Torsional Oscillations. USSR Author's Certificate 1200032 (1984).

Matsepuro, A. D. Structurization in an Electric Field and a Composition of Electrorheological Suspensions. *Electrorheology, Investigations and Applications*, Z. P. Shulman, ed., Minsk: AN BSSR Press, pp. 27-51 (1983).

Mironov, E. I., A. N. Stanilevich, V. I. Kordonsky, E. V. Korobko, *et al.* A study of the possibility of improving the vibroprotection properties of mobile machine seats based on magneto-electrorheological controllable shock-absorbers. *Transfer Process in Polymer Fluids and Suspensions*, ITMO AN BSSR Press, Minsk, pp. 42-49 (1986).

Mokeev, A. A., E. V. Korobko, and L. G. Vedernikova. Structural Viscosity of ERF. *Journal of Non-Newtonian Fluids*, in press (1991).

Nosov, V. M. On the Possibility of Measuring Some Technological Characteristics of Materials With the Aid of the Dielectric Rotation Effect. *Rheology of Polymer and Disperse Systems and Rheophysics*, Z. P. Shulman, ed., Minsk: MO AN BSSR Press, p. II:73-78 (1975).

Petrzhik, G. G., O. A. Chertkova, and A. A. Trapeznikov. Electrorheological Effect in Non-Aqueous Different-Composition Dispersions in Dependence on Electric Field Parameters, *Dokl. AN SSSR*, 253 (1):173-177 (1980a).

Petrzhik, G. G., O. A. Chetkova, and A. A. Trapeznikov. An Electrorheological Composition, USSR Author's Certificate 715596 (1980b).

Ponofsky, W. Kh. and M. Phillips. *Classical Electricity and Magnetism*, Cambridge, Addison-Wesley Publishing Company, Inc., p. 432 (1963).

Rebinder, P. A., *Physical-Chemical Mechanics of Disperse Structures*, Moscow (1956).

Report: A study of ERE dynamics with the aim of crating an impact rig with a controllable pulse form, VNII, *Electronstandart* (1980).

Rosensweig, R. F. *Ferrohydrodynamics*, Moscow: Mir., p. 357 (1989).

Rubanov, A. S., E. V. Korobko, A. I. Kitzak, G. N. Blinkov, and I. V. Bukovich. Evaluation of ERF Structurization Kinetics by the Speckle-Interferometry Technique. *Proceedings of International School-Seminar Rheophysics and Thermophysics of Nonequilibrium Systems*, Z. P. Shulman and E. V. Korobko, eds., Minsk: ITMO AN BSSR Press, pp. 77-82 (1991).

Shevchenko, N. I. and L. O. Ashurova. The Seismoreceiver. USSR Author's Certificate 1377798 (1988a).

Shevchenko, N. I., *et al.* Seismoreceiver. USSR Author's Certificate 1374161 (1988b).

Shilov, V. N. and Yu. F. Deinega. *Kolloid. Zh.*, 31(6):908-911 (1969).

Shilov, V. N., Proc. of the 3rd All-Union Meeting on Electric Treatment of Materials, Kishenev (1971).

Shulman, Z. P., Yu. F. Deinega, R. G. Gorodkin, and A. D. Matsepuro. Electrorheological Effect. *Minsk: Nauka i Tekhnika*, p. 176 (1972a).

Shulman, Z. P., R. G. Gorodkin, V. A. Kuz'min, T. A. Demidenko, and V. K. Gleb. A Working Medium for Dielectric Engines, USSR Author's Certificate 336755 (1972b).

Shulman, Z. P., B. M. Khusid, and A. D. Matsepuro. Charge Transfer by Oscillating Particles in Electrorheological Suspensions. II. Calculation of Interaction Between Particles and an Electrode. *Vesti AN BSSR, Ser. Fiz.-Tekh. Nauk*, 4:70-77 (1974a).

Shulman, Z. P., A. D. Matsepuro, and B. M. Smolsky. A Study of ERF Structural Characteristics in Non-Aqueous Disperse Systems, *Vesti AN BSSR, Ser. Fiz.-Tekh. Nauk*, 1:60-66 (1974b)

Shulman, Z. P., A. D. Matsepuro, and B. M. Khusid, 1974, *Bestsi AN BSSR, Ser. Fiz.-Energ. Nauk*, 1:60-65; 1974, 2:130-134; 1974, 4:62-67.

Shulman, Z. P., R. G. Gorodkin, and V. M. Nosov. The Rotary Viscosimeter. USSR Author's Certificate 591750 (1976).

Shulman, Z. P. and E. V. Korobko. Intensification of Convective Heat Transfer of Weakly Conducting Suspensions with the Aid of Electric Fields. *Electron. Obrabotka Materialov*, 1:4-8 (1977).

Shulman, Z. P., B. M. Khusid, and A. D. Matsepuro. Structurization of Electrorheological Suspensions in an Electric Field. II. Quantitative Estimation. *Vesti AN BSSR, Ser. Fiz.-Energ. Nauk*, 3:122-127 (1977a).

Shulman, Z. P., A. D. Matsepuro, and B. M. Khusid. Structurization in an Electric Field. I. Qualitative Consideration. *Vesti AN BSSR, Ser. Fiz.-Energ. Nauk*, 3:116-121 (1977b).

Shulman, Z. P., M. M. Ragotner, R. G. Gorodkin, and E. V. Korobko. The Generator of Fluid Pressure Fluctuations. USSR Author's Certificate 717417 (1977c).

Shulman, Z. P. and E. V. Korobko. Convective Heat Transfer of Dielectric Suspensions in Coaxial Cylindrical Channels. *Heat and Mass Transfer*, 5:543-548 (1978).

Shulman, Z. P., R. G. Gorodkin, G. M. Blokh, and E. V. Korobko. The Electrorheological Brake Pusher. USSR Author's Certificate 625073 (1978a).

Shulman, Z. P., R. G. Gorodkin, G. M. Blokh, and E. V. Korobko. The Electrorheological Valve. USSR Author's Certificate 7673793 (1978b).

Shulman, Z. P., E. A. Zaltgendler, and V. K. Gleb. Conjugated Problem of Convective Heat Transfer in Recuperative Heat Exchangers with a Non-Newtonian Heat Carrier. *Proceedings of the 6th International Heat Transfer Conference*, Toronto, pp. 367-372 (1978c).

Shulman, Z. P., G. M. Blokh, and E. V. Korobko. The Ventilation Installation. USSR Author's Certificate 666301 (1979a).

Shulman, Z. P., R. G. Gorodkin, M. M. Ragotner, and E. V. Korobko. The Weight of Dielectric Suspensions. USSR Author's Certificate 830126 (1979b).

Shulman, Z. P., R. G. Gorodkin, *et al.* The Peristaltic-Type Pump. USSR Author's Certificate 670744 (1979c).

Shulman, Z. P., R. G. Gorodkin, M. M. Ragotner, and E. V. Korobko. A Tracking Device for Duplicating Machines. USSR Author's Certificate 709329 (1979d).

Shulman, Z. P., *et al.* The Sealing Unit. USSR Author's Certificate 694710 (1979e).

Shulman, Z. P. and V. M. Nosov. Rheoelectric Converters. *Electrorheology: Studies and Applications*, Z. P. Shulman and E. V. Korobko, eds., Minsk: ITMO AN BSSR Press, pp. 3-26 (1981).

Shulman, Z. P., Yu. A. Domanov, *et al.* The Acoustic Lens. USSR Author's Certificate 1122374 (1982a).

Shulman, Z. P., A. D. Matsepuro, *et al.* The Dielectric Engine. USSR Author's Certificate 1014450 (1982b).

Shulman, Z. P., R. G. Gorodkin, *et al.* The Pump. USSR Author's Certificate 1079899 (1983).

Shulman, Z. P. and A. D. Matsepuro. Specific Features of Fixing the Samples in an Electric Field With Use of Structurizable Suspensions. *Collected Papers of the Heat and Mass Transfer Institute of the Byelorussian Academy of Science*, pp. 64-68 (1985).

Shulman, Z. P. and V. M. Nosov. The Rotation of Non-Conducting Solids in Electrorheological Suspensions, *Nauka i Tekhnika*, Minsk, p. 111 (1985).

Shulman, Z. P., M. A. Chobot, I. V. Bukovich, E. V. Korobko, and R. V. Sukhanova. A Study of Dielectric Properties of Electrorheological Suspensions. *Vesti AN BSSR, Ser. Fiz.-Tekh. Nauk*, 2:96-101 (1985a)

Shulman, Z. P., R. G. Gorodkin, *et al.* The Electrostatic Gripper. USSR Author's Certificate 1393629 (1985b).

Shulman, Z. P., M. M. Ragotner, R. G. Gorodkin, and V. K. Gleb. The Electrorheological Clutch. USSR Author's Certificate 1165826 (1985c).

Shulman, Z. P., R. G. Gorodkin, V. K. Gleb, and G. I. Sidorova. The Electrostatic Relay. USSR Author's Certificate 1363323 (1986a).

Shulman, Z. P., B. M. Khusid, and E. V. Korobko. Electrorheological Vibroprotection of the Oscillating Systems, Preprint N 22, Minsk: ITMO AN BSSR Press, p. 52 (1986b).

Shulman, Z. P., B. M. Khusid, and E. V. Korobko. Vibroprotection Systems on the Basis of Dampers of Viscous Friction with ERF. *Dokl. AN BSSR*, 31(8):720-777 (1987a).

Shulman, Z. P., E. V. Korobko, I. V. Bukovich, G. M. Pashik, and B. M. Khusid. Limiting Accelerometer. USSR Author's Certificate N 1387664 (1987b).

Shulman, Z. P., R. G. Gorodkin, M. M. Ragotner, Z. A. Novikova, and T. A. Demidenko. The Method to Prepare Diatomite Electrorheological Suspensions, USSR Author's Certificate 1404515 (1988).

Shulman, Z. P., M. G. Yanovsky, and E. V. Korobko. The Mechanism of a Visco-Elastic Behavior of ERF. *Journal of Non-Newtonian Fluids*, 33(1):181-196 (1989).

Shulman, Z. P. and A. D. Matsepuro. Electrorheological Effect in Metal Oxide Suspensions. *Rheokinetics and Convection of Structurizable Composites*, Z. P. Shulman and B. M. Khusid, eds., Minsk: AN BSSR, pp. 89-97 (1990).

Shulman, Z. P., V. G. Kulichikhin, V. E. Dreval, and E. V. Korobko. Thixotropic Properties of ERF Under Continuous Strain. *Journal of Engineering Physics*, 59(1):34-40 (1990).

Shulman, Z. P., E. V. Korobko, and R. G. Gorodkin. Electrorheological Fixture Arrangements. Preprint N 8, Minsk: ITMO AN BSSR Press, p. 52 (1991).

Shulman, Z. P., E. V. Korobko, and G. M. Blokh. Distributor USSR Author's Certificate 724220.

Shvartsman, A. Z. The Automatic Manipulator Gripper. USSR Author's Certificate 988550 (1983).

Simonova, T. S. and V. N. Shilov. The Electrostabilization Effect of Dispersions in a Constant Electric Field. *Kolloid. Zhurn.*, 40(1):81-87 (1978).

Tamm, I. E. The Fundamental Principles of the Electricity Theory. *Moscow: Nauka*, p. 504 (1989).

The Ultrasonic Finder. USSR Author's Certificate 930106 (1980).

Tolstoy, N. A., *Dokl. AN SSR*, 53:1563-1568 (1962).

Trapeznikov, A. A., G. G. Petrzhik, and O. A. Chertkova. Electrorheological Properties of Non-Aqueous Dispersions of Titanium Dioxide and Silica in Dependence on Concentration of Moist Fillers. *Kolloid. Zhurnal*, 43(6):1134-1140 (1981).

Usiyarov, O. G., S.I. Larov, and I. F. Efremov, 1965, *Kolloid.* Zh., 27(5):787ff (1966); 28(2):289-293, 28(4):596-603 (1966); 28(5):770-776 (1970); 32(1):63-69; (1966).

Vinogradov, K. S. and V. A. Karelin. The Shock-Absorber. USSR Author's Certificate 495467 (1975).

Vlodavets, I. N., G. A. Vorobieva, and A. G. Grivtsov. *Kolloid. Zh.*, 36(6):1046-1052 (1974).

Vorobieva, G. A. Problems of Physical-Chemical Mechanics of Fibrous Disperse Structures and Materials, *Zinatne*, Riga (1967).

Yas'ko, V. P. *et al.* The Device for Fastening Non-Rigid Constructions under Mechanical Processing. USSR Author's Certificate 290315 1989).

Zaitsev, V. M. and M. I. Shliolis. *Zh. Prikl. Matem. i Teoret. Fiz.*, 5:11-16 (1969).

FIGURE CAPTIONS

Fig. 1 Relative viscosity of 10% CMC suspension in transformer oil *vs.* moisture content at different electric intensities: E = 0.8 (1); 1.6 (2); 2.6 kV/mm (3).

Fig. 2 The plot of a charge of platinum (1) and silica gel (2,3) spheres on a potential difference between dish electrodes. A diameter of the spheres is 2.2 mm.

Fig. 3 Influence of 50 Hz a.c. electric field on dielectric lose tangent (a) and dielectric constant (b) of air-dried cellulose (paper) samples (1) and carboxymethylcellulose with the different amount of COOH groups ψ = 0,8 (2); 1,4 (3); 2,6 (4) %.

Fig. 4 The model of large-concentration ERFs 1, disperse medium; 2, particles of a solid phase with an activator; 3, electrodes with charges with density $\pm G_0$; 4, power source with internal resistance R_i 1 leakage current; $G = G_p + G_a$ is the total density of polarization and absorption charges, P_M is the Maxwell pressure at the dispersion layer edges.

Fig. 5 Shear stress (a) and its change (b) in the presence of an electrical field *vs.* shear rate for ERF (DM - diatomite in transformer oil). φ = 5 (1); 20 (2,4); 40 (3,5-7); 60 (8-10) wt %. E = 0 (1, 2, 3); 0.5 (5, 8); 1.0 (7, 9); 1.5 (4, 10) kV/mm.

Fig. 6 Influence of shear rate (a) and electric intensity (b) on effective viscosity of ERF based on diatomite (a) and cellulose derivatives (b) in transformer oil. 1, citrate; 2, tartrate; 3, phosphate of cellulose.

Fig. 7 ERF volumetric flow rate *vs.* pressure drop in a coaxialcylindrical channel-condenser for different solid phase (DM) concentrations and electric field intensity.

Fig. 8 Initial shear stress of ERF (DM) *vs.* electric field intensity. φ = 60%.

Fig. 9 Log elasticity and loss moduli *vs.* electric intensity (a) at different diatomite concentrations: ς = 20 (1); 20 (2); 60 (3) wt. % at f = 0.1 Hz and *vs.* the filler content (b) in ERF at E = 0.1 (1,2), 2,6 (3, 4) kV/mm at $\tau\omega$ = 1. Relative strain amplitude is γ = 0.0266.

Fig. 10 Viscoelastic characteristics obtained at periodic $|\eta^*|$ (1), G" (1) and continuous η (2'), τ (2') deformation *vs.* frequency $\tau\omega$ and shear rate γ. φ = 40 wt %, E = 0.65 kV/mm.

Fig. 11 Specific force of separation (a) and shear (b) of a piecework with the area 12.5 cm^2 *vs.* a base with a 50 μm thick ERF (DM) layer. φ = 60% wt.

Fig. 12 Response of a coaxial-cylindrical electrorheological valve to stepwise voltage in a flow-through channel.

Fig. 13 Shear stress *vs.* electric field intensity (a) and shear rate (b) with their increase (a) and decrease (2), a, $\gamma = 16\ s^{-1}$, b, E = 0.66 kV/mm. φ = 40 % wt.

Fig. 14 Time dependencies of moduli G' and G" at periodic deformation after switching off the electric field with the intensity E = 2.6 kV/mm, φ = 60 % wt. f = 0.16 Hz, relative deformation amplitude $\gamma_{\cdot}$ = 0.027.

Fig. 15 Relative viscosity of 40% wt ERF *vs.* frequency of the variable sinusoidal electric field with E = 0.66 kV/mm (pulse duration D = ½) at the/ shear rate $\dot{\gamma}$ = 5.45 s-1, η_0 = 2 Pa·s.

Fig. 16 Electric field intensity (a), shear rate (b) and temperature (c) on conduction, relative viscosity and dielectric loss of ERF (DM).

Fig. 17 Effective thermal conductivity (a) and convective heat transfer coefficient (b), acoustic (c) and optical (d) characteristics of ERF (DM) *vs.* electric field intensity.

Fig. 18 Types of electrorheological valves: coaxial-cylindrical (a); in the form of a stack of disks (b and helical springs (c).

Fig. 19 Characterization of ERF flows *via* spiral and coaxial valves, a, flow rate is head; b, differential pressure across a valve *vs.* flow rate. E = 0(1); 2(2), 3(3), 4(4) kV/mm.

Fig. 20 The dielectric suspension pump. 1, drive; 2, voltage supply; 3, suction valve; 4, delivery valve.

Fig. 21 The ER-vibrator with a distributor and a single pressure source. 1, cylinder; 2,3,12,13, ER-valves; 4, flow; 5,6,7, cavities; 8,9, hydroline; 10, pump; 11, ER-distributor.

Fig. 22 Tracking device for copying machines. 1, board; 2, sample; 3, blank; 4, probe; 5, rheostat; 6, electric circuit; 7, cylinder; 8, piston; 9, oil pump; 10, ERF; 11, milling head.

Fig. 23 Liquid pressure oscillator. 1, cylinder; 2, valve; 3, rod; 4, ERF; 5, piston; 6, oscillator; 7, liquid.

Fig. 24 Hydraulic devices: (a) The sealing device. 1, elastic chamber; 2, fittings; 3, electroconducting layer; 4, ERF; 5, body; 6, shaft. (b) The monitoring device. 1, condenser plates; 2, generator; 3, ERF.

Fig. 25 The peristaltic-type pump. 1, elastic hose; 2, metallized section (electrode); 3, dielectric partition; 4, body; 5, ERF.

Fig. 26 The axial pump. 1, flow-through cavity; 2, hub; 3, working wheel blades; 4, collector; 5, shaft; 6, arrangement guides; 7, brush of power supply to a collector.

Fig. 27 Electrohydraulic brake pusher. 1, electric motor; 2, wheel; 3, cylinder; 4, ER valve; 5, stem; 6, pumping channel.

Fig. 28 The device to damp torsional oscillations.

Fig. 29 Passive damper in the vibroprotection system of the precision equipment.

Fig. 30,31 The electric field effect on parameters of free and forced oscillations of the mass with the ER-damper in the system shown in Fig. 29. E = 0(1); 0,04(2); 0,08(3); 0,12(4); 0,5 kV/mm (5)

Fig. 32 The ventilation system with an ER-clutch stabilizer. 1, jacket; 2, fan's wheel; 3, wind motor; 4, ER-clutch stabilizer; 5, bush.

Fig. 33 Fixture scheme of flat workpieces with the aid of the ER-fixture arrangement at finish processing of their surfaces (a) and samples of disc-bases for fixing workpieces on a chuck (b).

Fig. 34 Photo of a metal-optic workpiece processed according to the scheme depicted in Fig. 32.

Fig. 35 Schematic of fixing a non-rigid shell-type construction on a chuck of a vertical lathe (a) and an electrorheological fixing unit for non-rigid cylindrical workpieces.

Fig. 36 Arrangement to increase rigidity of blades processed on a grinding machine: 1, supporting ring; 2, movable rods; 3, electrorheological fluid; 4, blade to be processed; 5.1 through 5.3, numbers of cross-sections.

Fig. 37 A schematic diagram of an ER gripping device: 1 through 5, electrodes; 6, semiconductor layer; 7, ERF; 8, workpiece; 9, body.

Fig. 38 Robot's gripper. 1, body; 2, gripping jaws; 3, electrodes; 4, ERF; 5, drive of gripping jaws in the form of filled-out cylinders.

Fig. 39 The ultrasound finder. 1, piezoconverter; 2 & 3, electrodes; 4, ERF.

Fig. 40 The dielectric motor. (a) Two-electrode model. 1, dielectric rotor; 2, needle; 3, ruby thrust bearing; 4, body; 5, bearing; 6, power source; 7, electrode; 8, cylinder; 9, ERF; 10, oscillation recording unit. (b) Multielectrode coaxial-cylindrical model: stator 2 with slope β of electrodes 1.

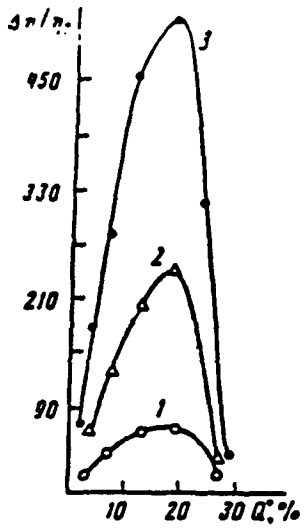

Figure 1.

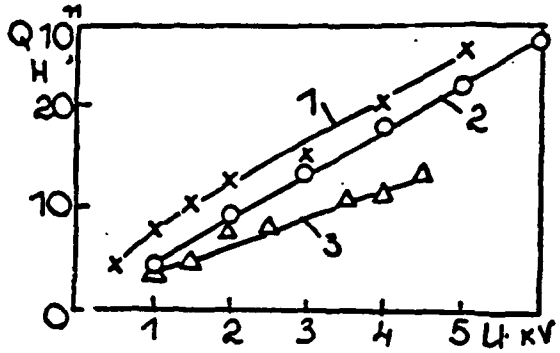

Fig. 2

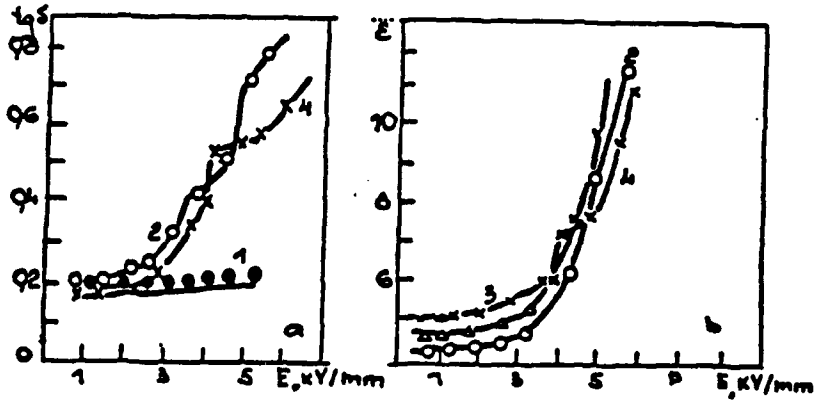

Fig. 3

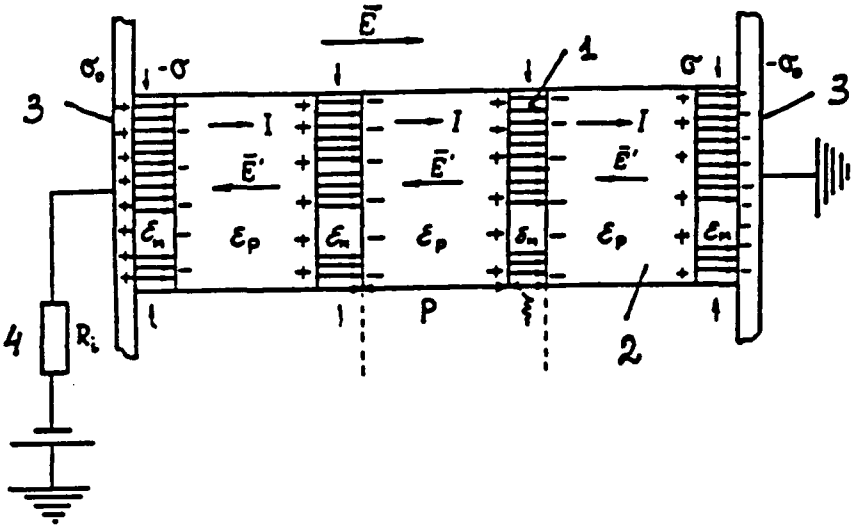

Fig. 4

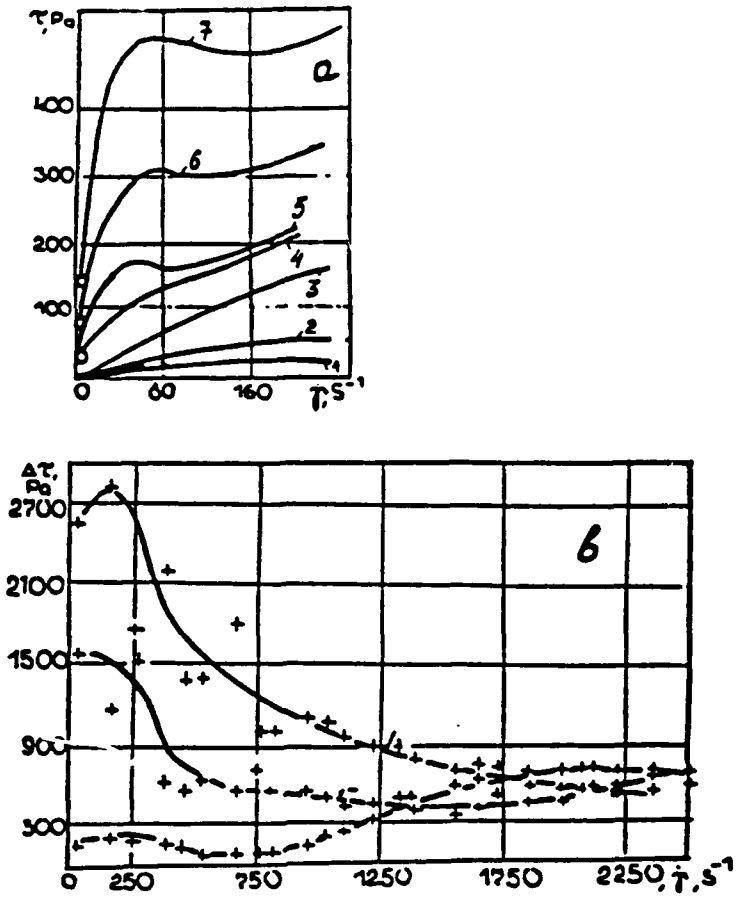

Fig. 5

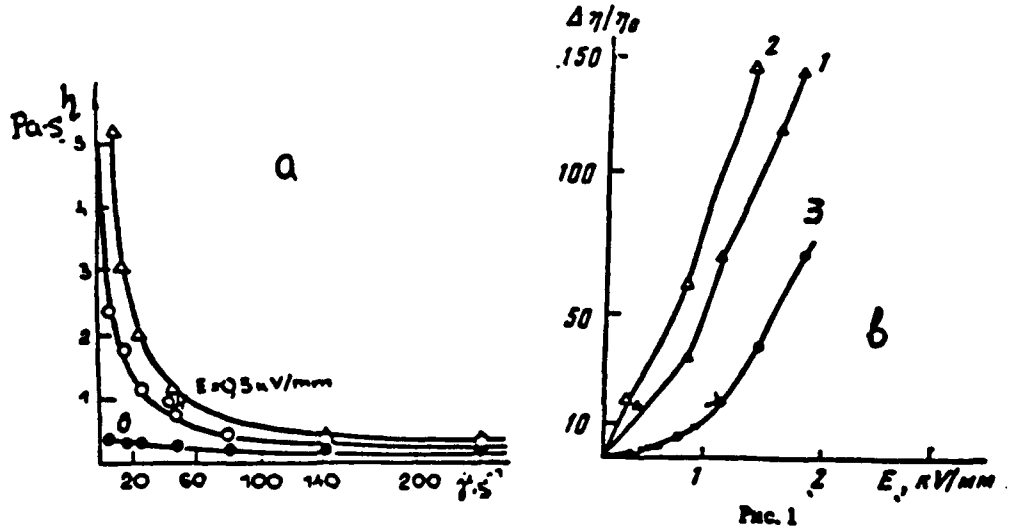

Figure 6.

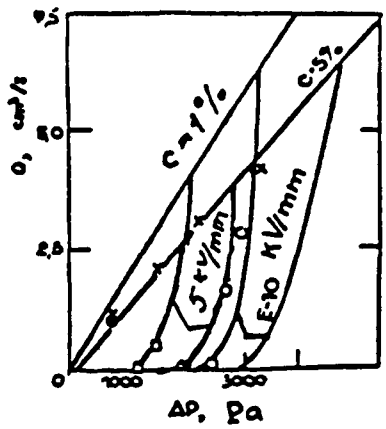

Figure 7.

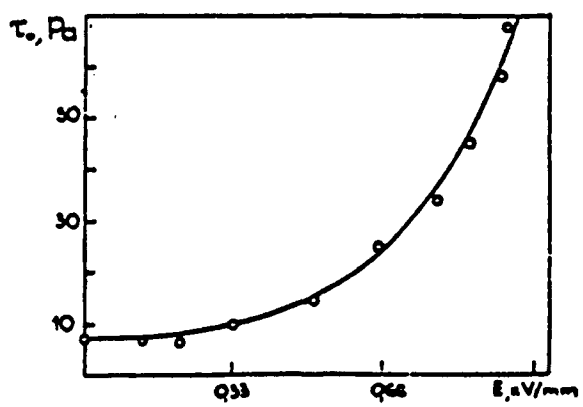

Figure 8.

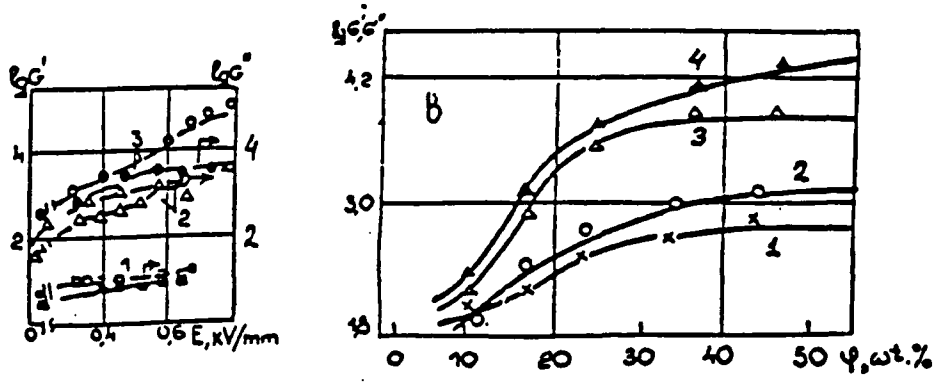

Figure 9.

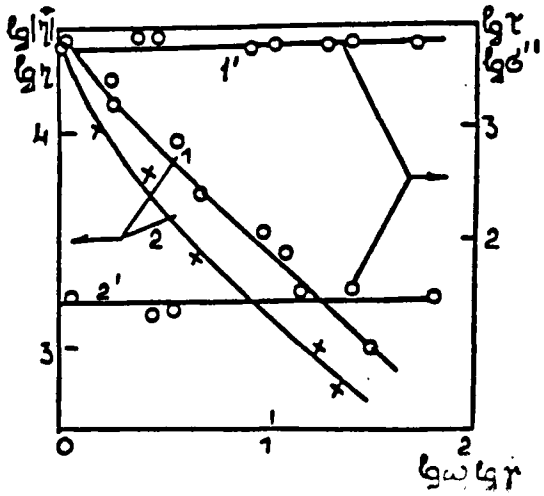

Fig. 10

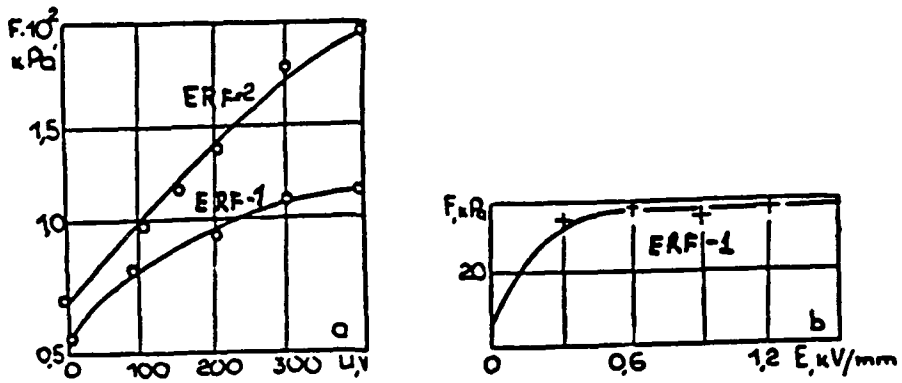
F.10²
kPa
1,5
1,0
0,5
0
100
200
300
U,V
ERF-2
ERF-1
a
F,kPa
20
0
0,6
1,2
E,kV/mm
ERF-1
b

Fig. 11

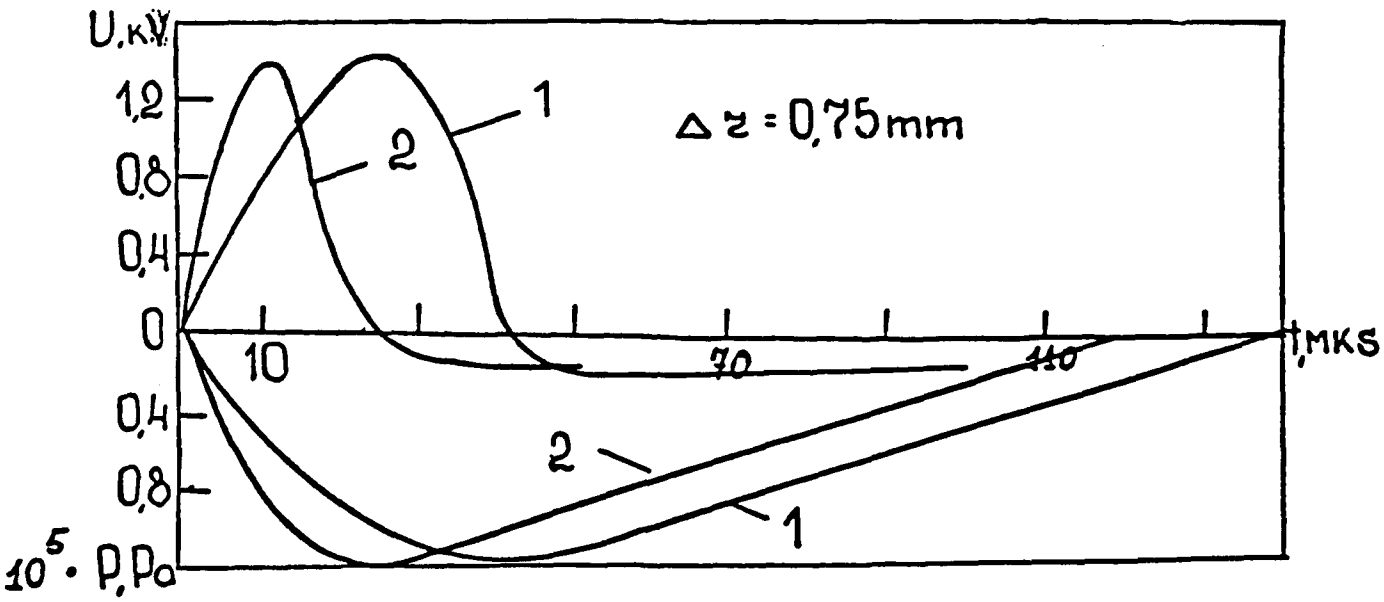
U,kV
1,2
0,8
0,4
0
0,4
0,8
10⁵ · P,Pa
10
70
110
t,MKS
1
2
Δz = 0,75mm

Fig. 12

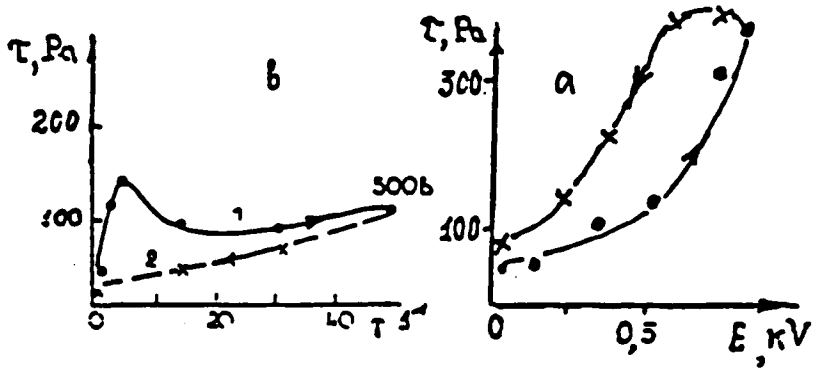

Figure 13.

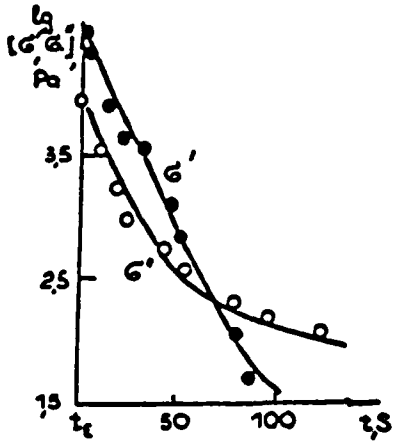

Figure 14.

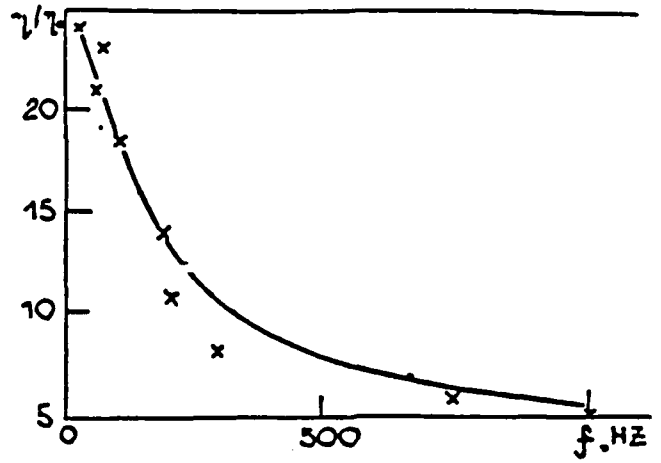

Figure 15.

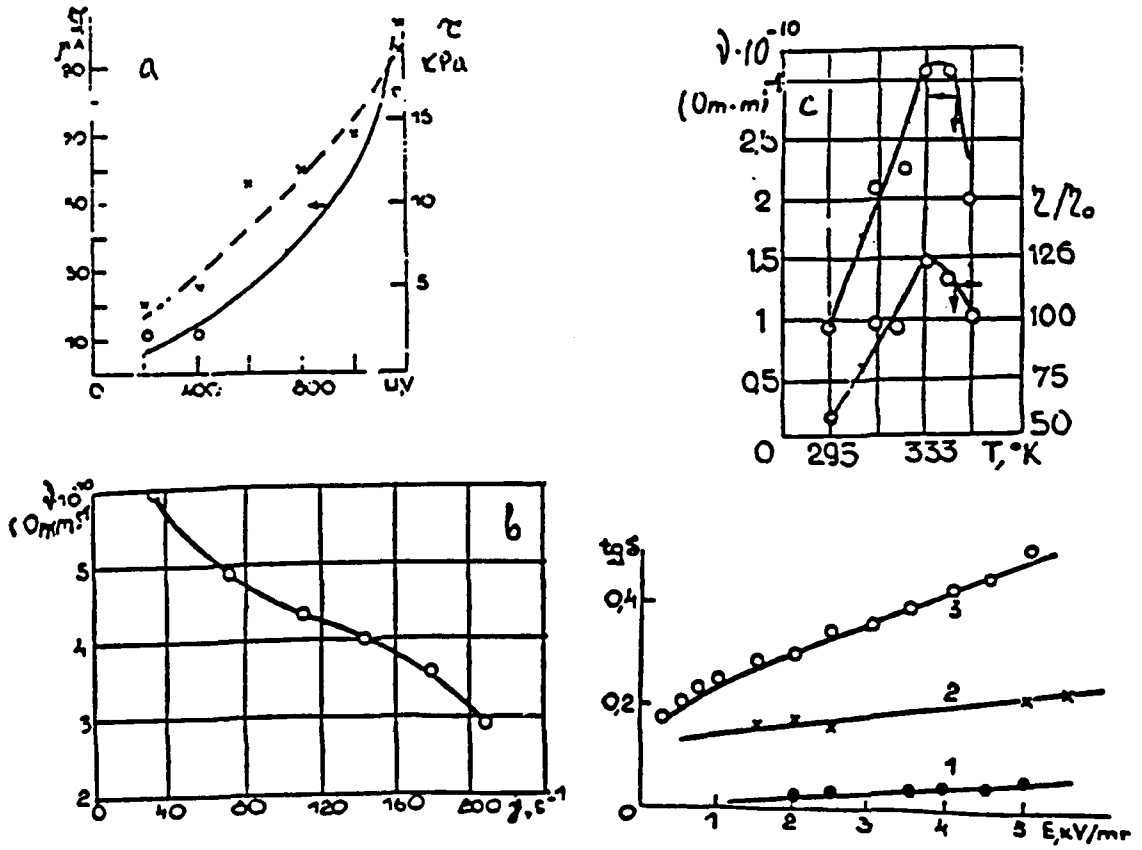

Figure 16.

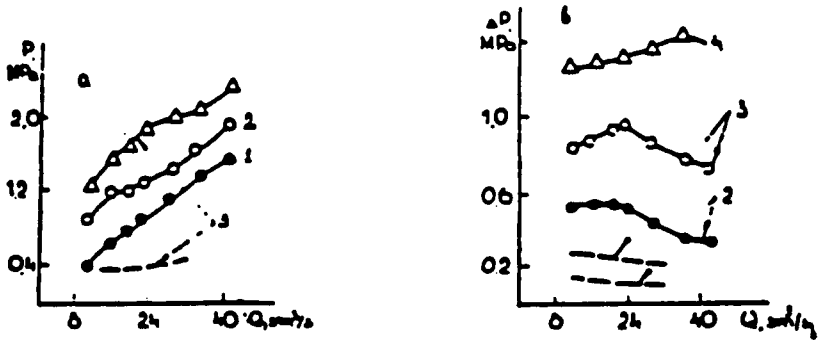

Fig. 19

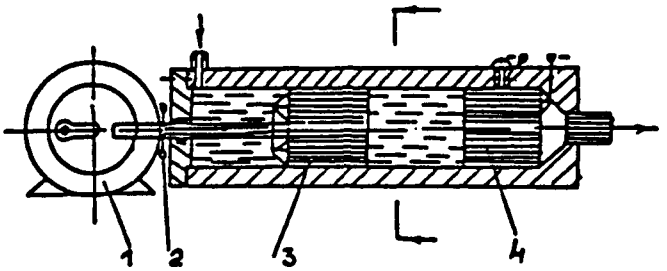

Fig. 20

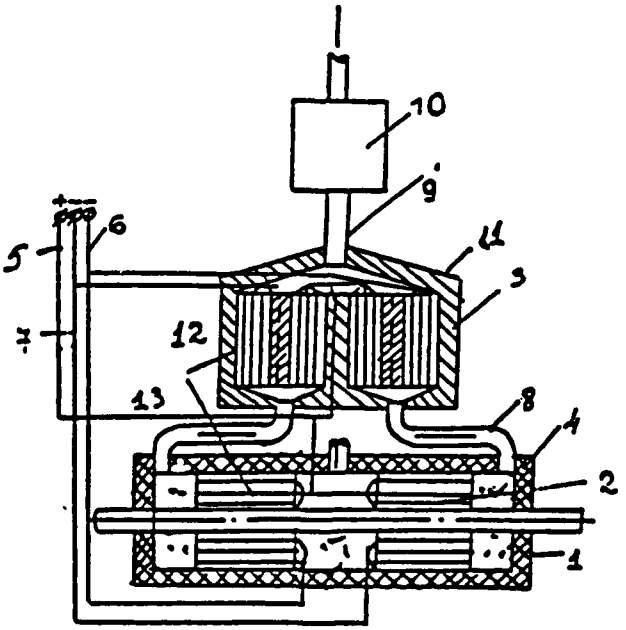

Fig. 21

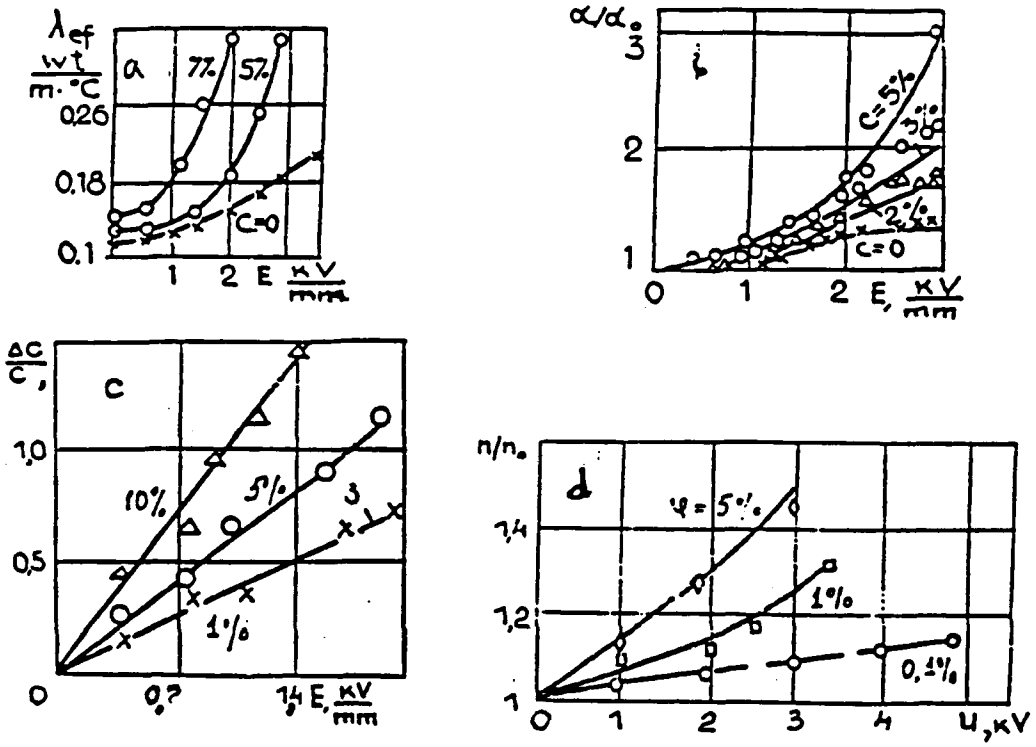

Figure 17.

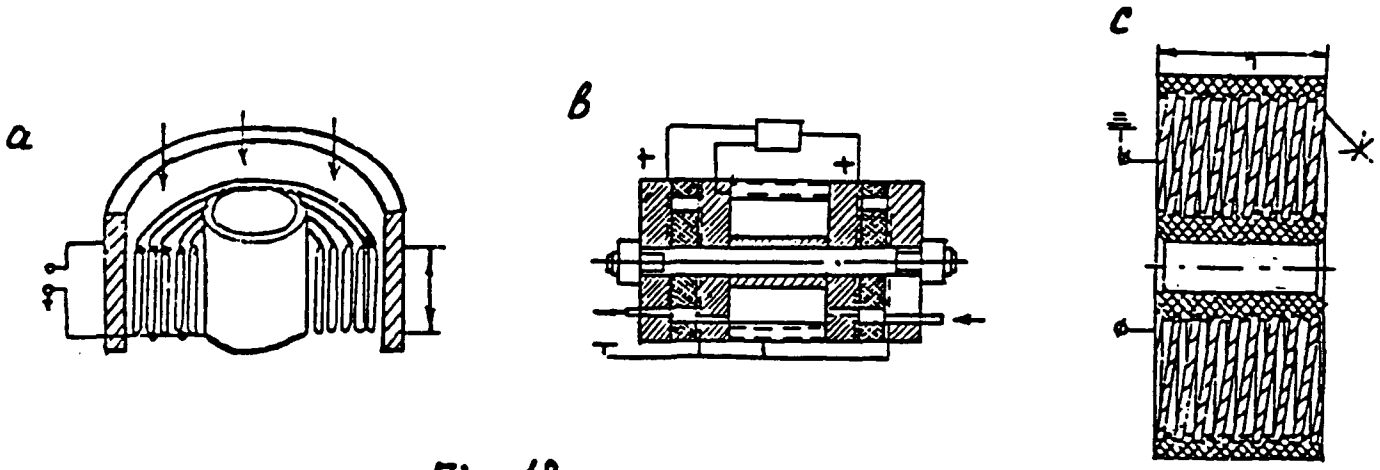

Fig. 18

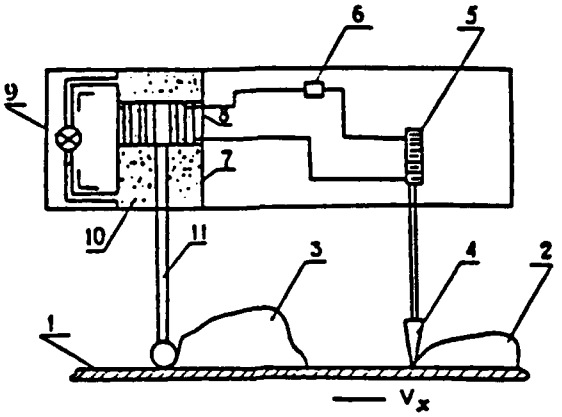

Fig. 22

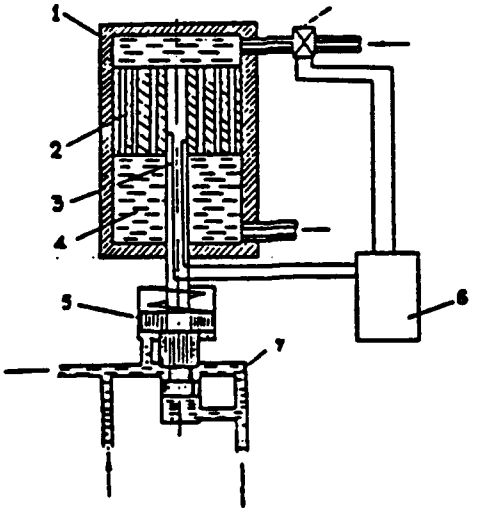

Fig. 23

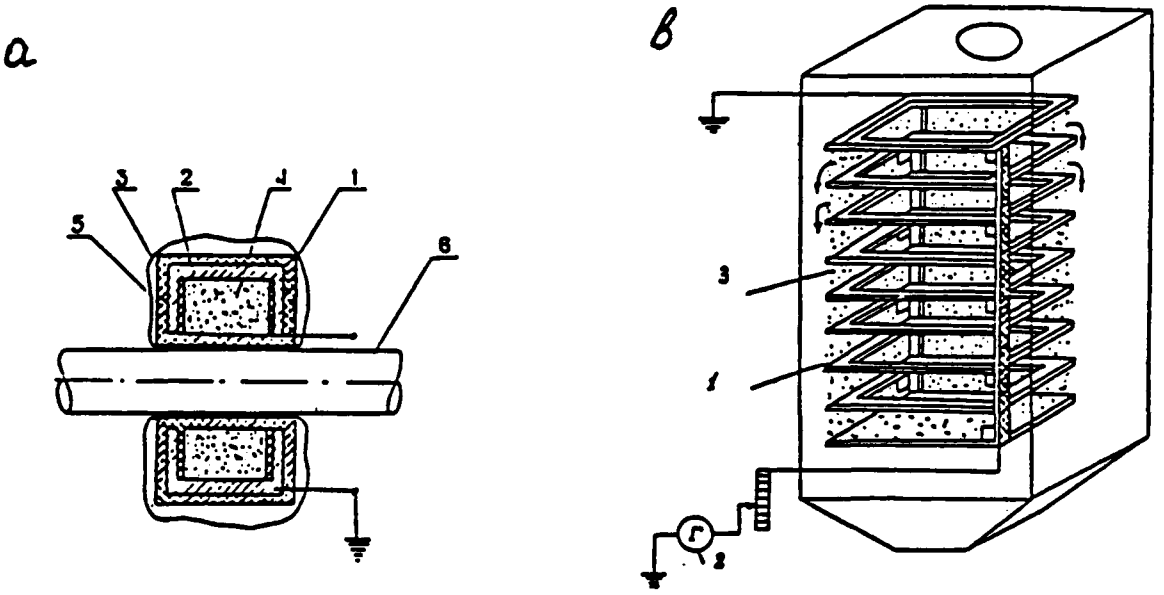

Fig. 24

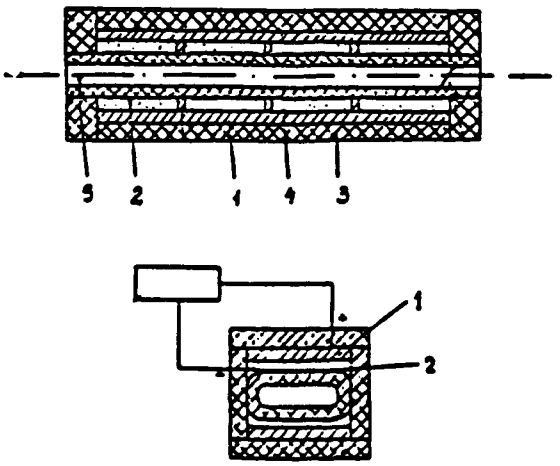

Fig. 25

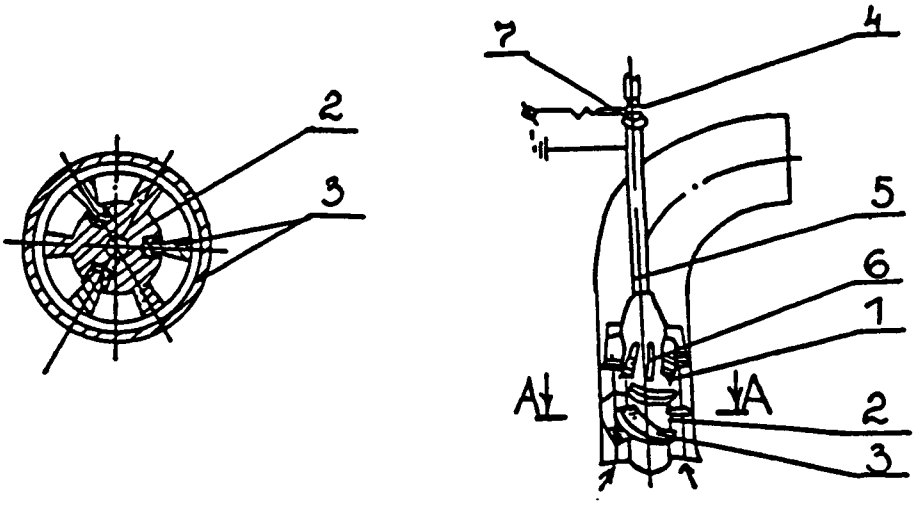

Fig. 26

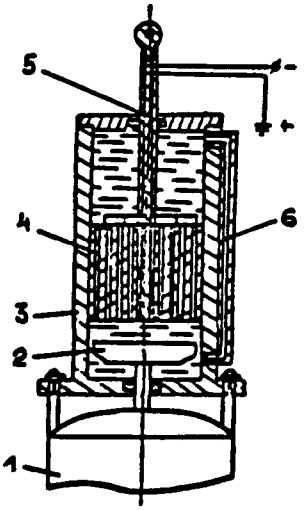

Fig. 27

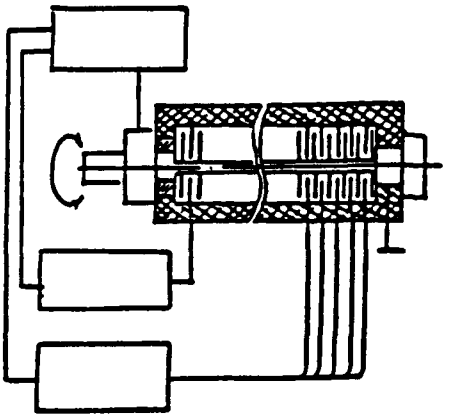

Fig. 28

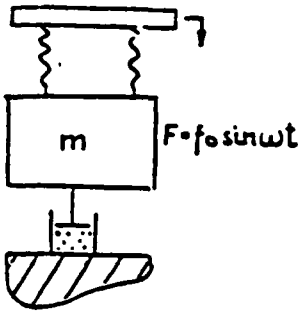

Fig. 29

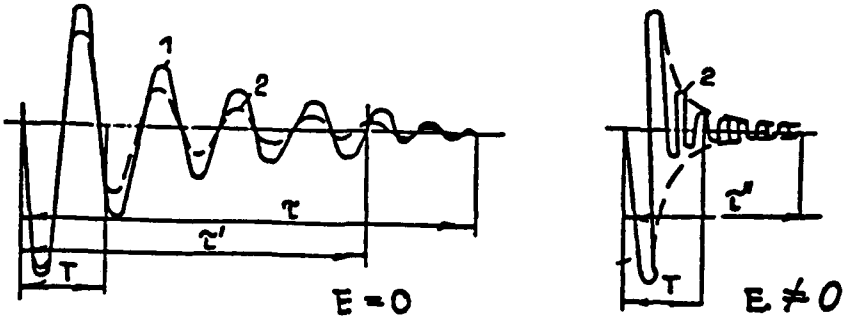

Fig.30

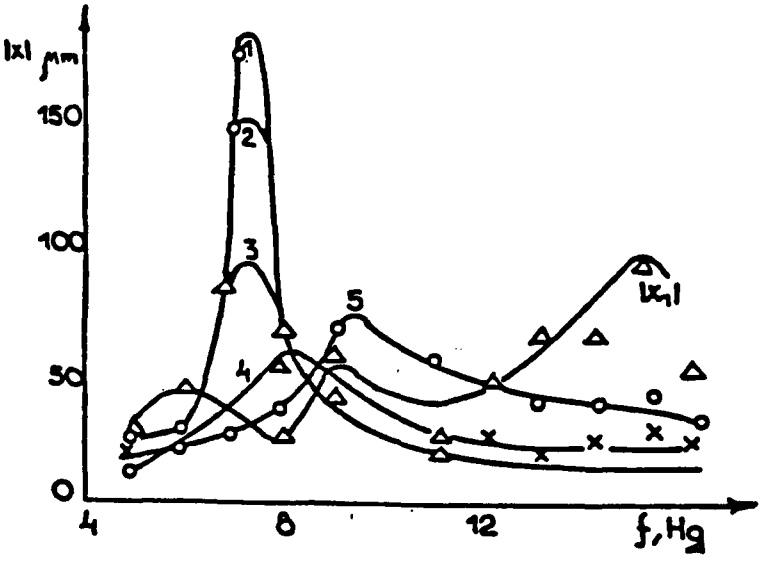

Fig. 31

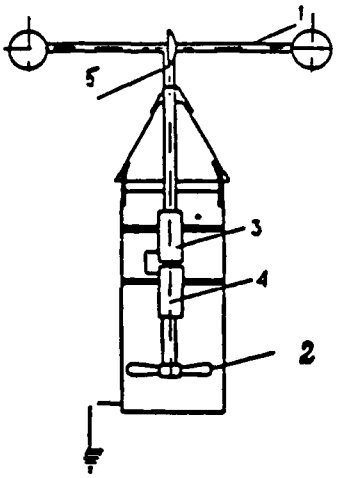

Fig. 32

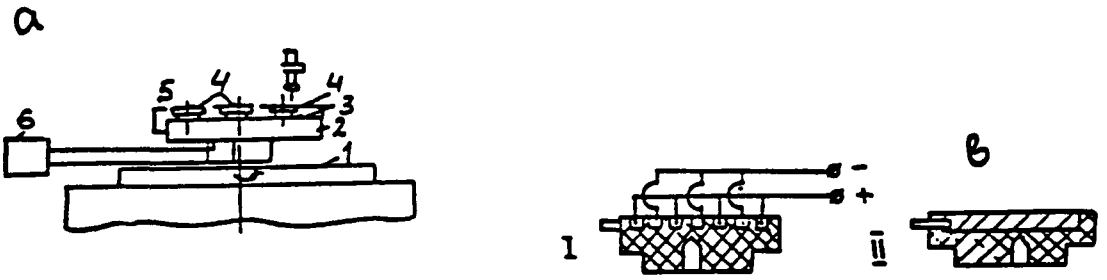

Fig. 33

Fig. 34

a

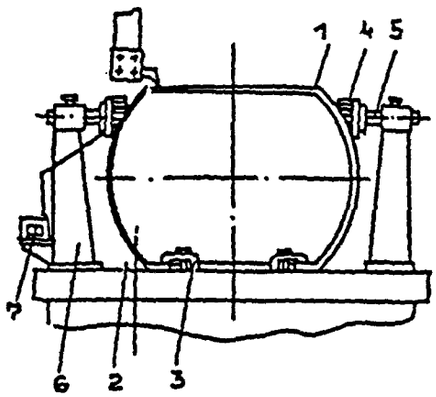

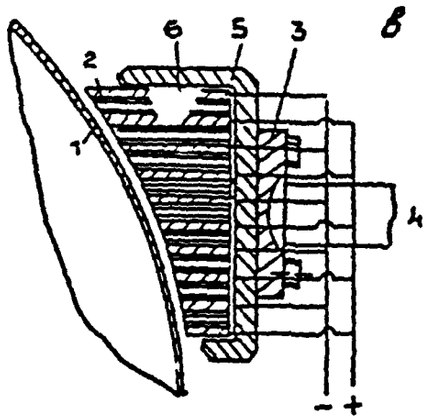

Fig. 35

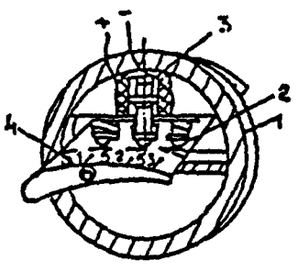

Fig. 36

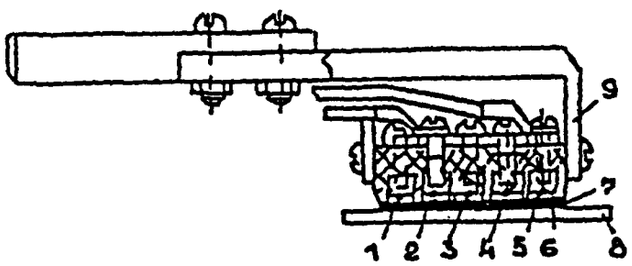

Fig. 37

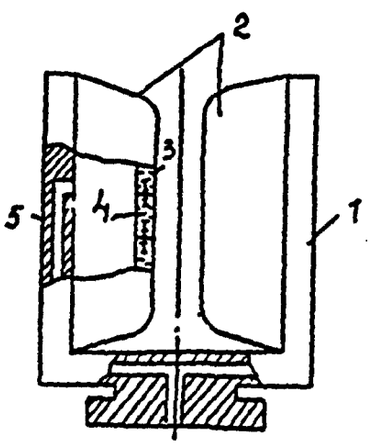

Fig. 38

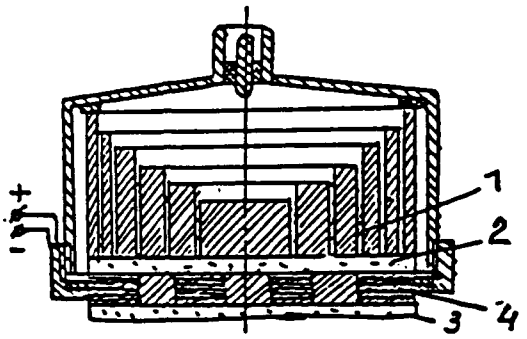

Fig. 39

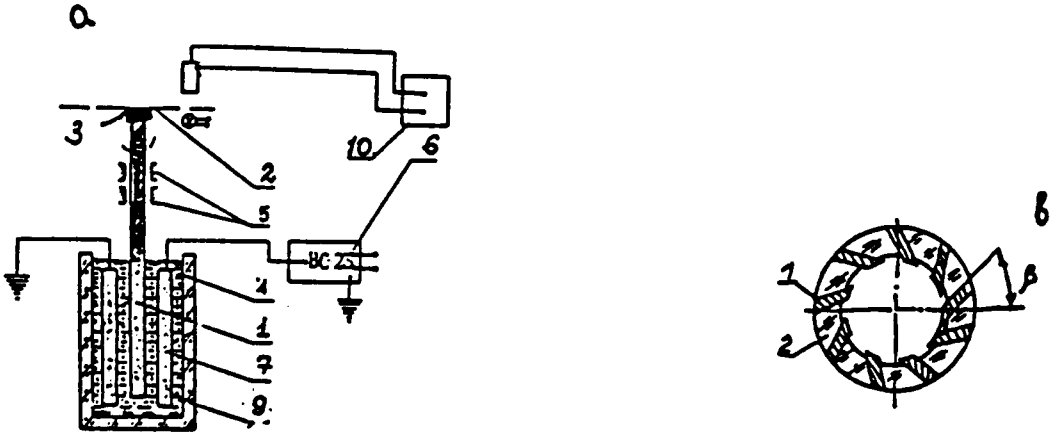

Fig. 40

6.2 Activities in ER Fluids in the United Kingdom

James W. Goodwin

School of Chemistry
University of Bristol

Cranfield Institute of Technology.

The principal investigator is Professor H. Block, who started working on ER fluids in 1979 due to observations made of changes in dielectric properties with systems under flow. Currently the work is centered on producing improvements to fluids, in addition to fundamental work on an improved understanding of the ER mechanism. Past research has produced two patents and 15 publications in the general literature. Reprints of a few of these papers are still available from Professor Block.

A particularly promising application of ER technology is in building specialist actuators where low power demand is important. There are also opportunities in large power applications, where ER devices can be utilized to simplify control and switching operations, although this would not produce large energy savings. One important and as yet unexploited facet of ER fluids is their electrical anisotropy under an applied field. This could have device implications, but so far there has been no published attempt to utilize this property.

In Cranfield, the characterization of fluids is mainly by home-built equipment for rheological performance. One of the current major problems with ER fluids is rapid sedimentation. The study of sedimentation is carried out using a column with a series of band electrodes, so that the sedimentation in opaque fluids can be followed by changes in electrical properties.

Further research is required to produce a better understanding of the fundamentals of both the chemistry of fluids and the physics involved in the applications, especially in understanding the continuous shear flow regime under applied electrical fields. Exploitation of devices will require device makers and fluid manufacturers to get together to develop specific devices, but there is currently a lack of investment confidence.

Advanced Fluid Systems Ltd., London

This is a small company whose special interest is active fluids. The interest started in 1965 at Laser Engineering, due to contact with A. Gerots of "The Pure Oil Co.". Laser Engineering then became Air-Log, and finally Advanced Fluid Systems (AFS) was formed by a nucleus from this company, providing continuity of interest over almost thirty years. The original work was financed by the defense industry, who required improved hydraulic systems. The original fluids were silica based and the work was carried out at Sheffield

University to improve the fluids. This was in collaboration with Professor W. Bullough and Dr. J. Stangroom at the University. Their aims have broadened since that time, and active research work is continuing to this day. The company's contributions were recognized recently by the U.K. Government with the presentation of a SMART Award.

Publication in the general scientific literature is not a high priority for AFS, although there have been a large number published through conference proceedings. AFS and its predecessors have some old patents on devices, but their current research has enabled four new patent submissions on devices. Although the company manufactures and markets ER fluids, it sees the device market as the major opportunity. As a result, some of the major current efforts are in the area of devices at the human/environmental interface, *i.e.*, devices for factories, offices and warehouses. The interest is in a systems level approach to give a completely integrated design, and this means tailoring the fluid to the device and not vice versa.

The most promising application areas appear to be industrial shock absorbers. The generic areas are those where hydraulics are currently used, but are expensive because of the complex and high precision of the engineering. Looser tolerances and simpler construction is usually possible with ER. This is likely to have an important impact on energy requirements. ER is also attractive as an option where no control is available, or where the control would be complex. ER devices can sense incoming load and adjust more rapidly *via* electronic control than high-cost and high-energy electromagnetic devices. There are also applications where there is a custom demand for a "hi-tech" solution.

The main energy savings should be in the great reduction in machining precision and complexity, less wear and less friction, giving longer life for cheaper actuators. It is possible to optimize devices for several design configurations, thus increasing the savings on numbers as well as re-design problems.

Some specific energy saving applications of ER fluids are:

i. Dynamic balance control of machines; *e.g.*, fans at power stations can be kept going if they can be dynamically rebalanced and run until a planned maintenance period is reached.

ii. Squeeze-film bearings with active control would show lower wear. Bearing vibration could be damped and currently, actuator driven bearings are too slow for applications such as turbo-generators.

iii. High-speed rail transport has problems with horizontal damping and requires an active system. With fast ER technology, a preview track scan system is possible to optimize passenger comfort.

iv. Compliant manipulators for shape-forming structures could be built.

v. In brake and drive systems, the weight savings possible from the use of composite materials will give a strong energy gain.

Many of these ideas fall into the "blue skies" category, and can only be properly costed at the near-market stage.

Characterization of ER fluids is carried out to well defined protocols by AFS. Some of the equipment used is specially built for the purpose by AFS. They have also modified a Contraves instrument and a Weissenberg Rheogoniometer. Measurements carried out on a routine basis are:

i. Static yield

ii. Couette flow using a home-built instrument with shear rates of 10 to 3,000 s^{-1} and applied fields of 0 to 2.5 kV/mm, both in 25 increments.

iii. Poiseuille flow under steady conditions up to 60 bar and up to 15 l/min.

iv. Oscillation as a function of frequency and field.

v. Compression between unbounded electrodes.

vi. Particle size analysis - there is no sedimentation testing at present but this is an active research problem.

vii. Long-term storage.

viii. Long-term pumping and flow performance.

The main problem in seeing the technology into the market place is the lack of funding available for device development. The Japanese for example have lots of patents on fluids, but few on devices. There appears to be a lack of receptivity amongst U.K. engineers, who appear to feel that it is too risky to be first! There is also a lack of understanding of the integrated systems approach (electronics/mechanics/non-linear fluids), and simple replacement of hydraulic fluids by ER fluids will not be very productive. Investing conservatism by major companies means that small entrepreneurial companies can not access the technology. There is also too much unreliable information about the fluids themselves, and this tends to confuse and to reduce confidence.

There should be good experimental work carried out on the prediction of yield as a function of field. This requires a better understanding of non-equilibrium structures. The E^2 prediction is not good at high fields, where the analysis requires a series expansion. The effects of size distribution and particle anisometry need detailed investigation. The response speed of ER fluids is not well understood, and there needs to be good experimentation in this area. The conduction mechanism and the control of power density need further work

if fluids are to be improved. Good experimental work with good model systems is urgently needed to check theoretical developments. More oscillation data are required on the different fluids.

Sheffield University

Professor W. Bullough has been running an undergraduate program with some ER content since 1967. In 1973 he wrote his first engineering review of the topic based on the yield stresses of starch-based fluids. Currently his efforts are directed towards the "Third Age of Machines", *i.e.*, electronic control of simple lightweight devices giving sophistication of output, and therefore very fast. ER fluids have advantages in that the yield stress is available quickly without massive inertial loads within the device. Professor Bullough has in excess of 60 publications on valves, clutches and control systems.

The most promising application feature is rapid response while having a system with very low inertia. Magneto-electric devices require heavy iron cores - and strong machines have very heavy ones - which means that they are slow. Components such as engine mounts are currently no problem to design - they just need engineers to make and use them!

The flexibility of ER machines will lead to multi-tasking instead of multiple machines. This will lead to a more energy-dense working with less waste of both material and energy. Devices which are one order of magnitude faster are possible. For example, carpet weaving is a fast technique but pattern changes require about a week of down time to re-set the mechanical unit. An ER machine could be programmable, and pattern-changing could be done while the machine is running.

Characterization of fluids is carried out on rheological equipment constructed to Professor Bullough's own design. The aim is to give a wide range of data from a single sample, *i.e.*, steady time and frequent domain information (steady velocity and steady acceleration), using the mecatronic approach to back out machine compliances from the total response to leave the material information.

The principal problem is seen to be sedimentation. High rotational speeds in a device means that particles can be centrifuged out of electrode gaps due to high g-forces. Slow changes in fluid response are not seen to be a problem, as adaptive control systems can cope with this. The problems of getting the fluids into use appear to be:

i. The realization by fluid developers of what is needed from fluids, which is principally that the yield stress contribution at appropriate shear rates for devices (*i.e.*, not too shear-thinning), and that the time scale for development of the stress should be as short as possible.

ii. The combination of rheology and surface chemistry that is required to reduce the zero-field viscosity, as heating can occur and the energy loss needs to be reduced.

iii. The above need to be achieved without deleterious effects on the other properties.

A study of particle size effects would be particularly useful, as it could help to design fluids at higher solids content, reduced application times and increased yield stresses. The community requires systematic testing at realistic engineering scales.

University of Sussex

Drs. D. Heyes and J. Melrose have been working in the field for about three years. Their main thrust is in computer simulation using molecular dynamics. There is a planned program for the future and the work will start shortly, but funding is limited.

ER Fluid Developments

This is a small company headed by Drs. J. Stangroom and L. Evans. Dr. Stangroom provided the original chemical input to give the polymer-based fluids of the late 1960's. The company has built a variety of demonstration devices, and one idea that could be very important is the use of ER actuators in an amplifier/servo mode. This enables high loads to be handled by light machines (*c.f.*, a capstan or block-and-tackle utilizing mechanical advantage). The company is about four years old, and its prime movers have many patents and other publications. They are currently manufacturing fluids, and their current fluoro-silicone oil base, which gives near-neutral buoyancy to the particles, could have some important applications.

U.K. Government Initiative

A LINK scheme with the U.K. Department of Trade and Industry (DTI) is being set up to try and encourage development of ER technology. The funding is in part from industry and part DTI; the work will be done in universities and in the companies who are collaborating. The work should be near-market, and the aim is to produce devices that will be used. The coordinator is Dr. D. Cheng of Warren Spring Laboratories, Stevenage, Hertfordshire.

6.3 FOUR COMPANIES IN JAPAN

Nissan Motor Company, Ltd.
Toyota Motor Corporation
Asahi Chemical Industry Co., Ltd.
Bridgestone Corporation

Frank E. Filisko
Department of Materials Science and Metallurgical Engineering
University of Michigan
January 22-30, 1992

COMMENTS: As indicated in another part of this document, the activity in electrorheology in Japan is far more extensive than the four companies represented here. I am truly sorry that I couldn't visit more because the experience was remarkable, but because of various constraints and a hectic schedule as it was, only four companies could be visited. However, it is felt that these visits adequately represent the overall activity in Japan. We are very grateful for the time given to us by these companies, and specifically for the numerous individuals involved. This visit was most impressive in terms of the attitude of the Japanese companies toward ER technology and the magnitude of the effort at all four places where I visited and lectured. As opposed to other places, the attitude was not whether ER technology would some day be good enough, but that it is here and good enough for many applications, and it is just a matter of time before it would become implemented. This was very refreshing.

On a whole, the Japanese companies were much more open with me than I experienced in other places. They were more willing to discus problems and concerns with me, without interjecting a legal advisor at every turn.

NISSAN MOTOR COMPANY

Yokosuka, Japan , Jan. 24-25, 1992.

My primary contacts at Nissan were Dr. Keishi Nigita and Dr. Jun-ichi Takimoto, both of whom were very gracious. Dr. Takimoto is primarily involved in ER research. I was not shown any facilities while there, primarily because of time constraints, and got the impression that they were more highly involved in devices than materials.

Nissan began working on ER fluids in about 1988, and have continued to increase activities. They started because of increased activity and publicity worldwide in EF devices. Specifically, they had been watching the field because they are very interested in active vibration-damping systems, and wanted to consider the potential of EFD in this application.

Although they are primarily interested in applications, they do have a significant activity in materials, judging by the high quality of the people they have working on materials.

Currently their efforts are both in the materials area and in applications. In the materials area they are interested in developing improved materials, *i.e.*, improved ER fluid compositions. One system being worked on involves some form of graphite particulates. They did not indicate a primary interest in the fluid market, but I estimate that their activity here is considerably less than in the applications area. In the applications area, their primary activity is in employing ER fluids in active damping applications, presumably toward active suspensions systems in autos.

They of course are actively involved in publishing and patenting and many are soon to be issued. Reprints or preprints of many are available but many are in Japanese.

They suggest that the most promising are applications include engine mounts, active suspensions systems, and other damping applications. This is apparently the area of their primary activity.

In applications regarding energy considerations, they suggest increased efficiency and weight reduction in automotive clutching systems, although I do not think that this aspect of ER has been a major concern of theirs up to this point.

They characterize settling just by allowing the fluids to settle and recording the transparent depth of fluid which develops on top the fluids with time. They characterize the rheology with a concentric cylinder apparatus presumably in continuous shear only. They do not monitor degradation of the fluids with time or use. In general they claim that instruments for making measurements are inadequate.

The principal problems and obstacles they indicate in developing ER technology are:

1. Not strong enough, *i.e.*, presumably they would prefer yield stress to be higher.

2. Too high currents. I might suggest that this is a problem presumably because they are working with graphite particulate systems and other-water based particulate systems, although no specifics were given.

3. Voltages are too high. What specific problems this caused were not discussed.

4. Settling. Whether this included just settling or also mat formation wasn't clear, but in the applications they seemed most interested in, *i.e.*, damping and shock absorbers, even settling could be a problem. However in the systems they presumably were working with, *i.e.*, water based, particle association would occur which would complicate this.

5. Abrasion. Little was discussed concerning the specifics of this.

Fundamental areas of concern include more work on and better understanding of the dielectric properties, and a major interest was shown toward mechanisms of how the materials function. On fluids they are doing a small amount of basic work, but what they do is significant. They are mostly applications oriented, but they are doing some work on fluid development.

There were a significant number of people at my lecture; unfortunately I could talk to only a few, but an extensive knowledge in ER was indicated.

TOYOTA MOTOR CORPORATION

Higashifuji Technical Center, Susono City, Jan. 27, 1992

Although I met many scientists from Toyota, my primary host was Dr. Hiroshi Hasegawa. It was a very interesting an gratifying day, and I was very impressed with the extent of activity at Toyota and the knowledge of the people there. They clearly have a very extensive effort, primarily in the device area.

Toyota became involved in ER in about 1988 because of increased activity worldwide and increased publicity. After visiting various laboratories throughout the world, especially England and the U.S., they made the decision to enter the field.

They currently have activity in both the materials area and the device area, however they have a much greater effort toward applications. In the materials area, one system they discussed with me was a semiconductor particulate system, poly(p-phenylene), but they didn't go any further into discussing the fluid except that they were working mostly with siloxane-based ER fluids. Their efforts toward fluids are in attempting to increase the yield stresses and minimize settling.

They are both publishing and patenting, and have pending patents and publications. Reprints and preprints of some of the materials is available but most are in Japanese. They indicated to me that they didn't have any specific application in mind, but were doing work on many and looking for the most promising applications and for markets to be determined.

They characterize their fluids with a standard concentric cylinder viscometer, but no other information was available.

Major problems concern low yield stresses, settling, erosion and abrasion.

Fundamental needs in basic research they would like to see included a better understanding of the surface science involved and of the mechanisms responsible for the rheological changes.

ASAHI CHEMICAL INDUSTRY COMPANY, LTD.
Fuji-City, Japan, Jan. 28, 1992.

My primary host here was Dr. Akio Inoue, who is well known in the field since he has attended a few meetings on ER in the U.S. I was very impressed with the large activity they have in ER, especially in the materials or fluids area. I was taken on a partial tour of their laboratories. They have a large activity in devices as well as in fluids.

Asahi began working on ERF around 1986 because of the very large potential business opportunities and increased activity worldwide.

Current activity is directed primarily toward developing new types of ER fluids, but also they have a very significant activity in devices, primarily damping applications related to desires of auto companies. They hope to be major fluids supplier, and the impression I got was they thought they would go commercial in one to two years, *i.e.*, market a fluid commercially. The only types of particulates discussed were insulated or coated conducting particles. These are made synthetically. This seemed to be the primary approach, but this is essentially published by Inoue and no major breakthroughs were indicated in this area (although if they had occurred, I certainly wouldn't expect this to have been discussed with me.)

They have publications in the 2nd ER Conference proceedings, and many others written in Japanese as well many pending and published patents, most in Japanese. I was given some articles.

They suggest very promising applications include robotics and control of hydraulic systems, *i.e.*, flow control and modulation for robotics applications.

Regarding energy savings, they speculate about making various devices much simpler and lighter. No specifics beyond this were discussed since we were with wrong group of people, but extensive activity in devices and applications at Asahi was definitely indicated.

Dr. Inoue took me on a tour of part of his laboratory facilities, associated only with their materials activity. The lab contained various custom-made devices for testing materials under dynamic and continuous flow conditions. The equipment was very elegantly constructed. It also contained some commercial equipment to simulate damping in relatively low frequency situations. They seemed to have a primary interest in damping measurements.

They consider their major areas of concern to be in stability of fluids at high voltages (*i.e.*, dielectric breakdown) and at high temperatures and durability of fluids under actual operating conditions for long times.

They see fundamental needs in synthesis of materials for ER applications. This seems to be consistent with their overall approach which, is directed toward polymerizing surface coatings on their conductive particles to insulate them. They seem to be approaching particles from conducting particles or conductive coatings on polymer particles, at least to the extent discussed with me.

BRIDGESTONE CORPORATION

Tachikawa (Tokyo), Japan, Jan. 29, 1992.

COMMENTS: My primary contact was Dr. Yuichi Ishino, who heads a very large and well funded and equipped group in the materials area. He received his Ph.D. from Case Western Reserve in polymers. They took me for a partial tour of their laboratory facilities in ER research. Overall it was a very impressive and a very large effort.

Work on ER fluids was begun around 1986 because of interest shown by many of their auto company customers for applications in automobiles, primarily in engine mounts and active suspension systems. The engine mounts and active suspension systems seemed to be the major interest and activity of their customers.

They have a major effort in fluids development and want to be a major supplier of fluids. They suggest that they have made very significant advances and indicate may have a commercial product in 1.5 to 2 years. They also have a major effort in devices, including shock absorbers, engine mounts, and other unspecified auto and industrial applications, seemingly oriented substantially toward damping.

They have published and patented substantially and are continuing to do so. Most of the materials are in Japanese.

Most promising applications they suggest include damping as in engine mounts and shock absorbers and small vibration control as for electron microscopes. This was interesting since it was the first company to mention this application.

Favorable energy applications were limited to engine mounts, since it was suggested that much energy was wasted in vibrations and vibration control could result in substantial savings. They didn't quantify the amount however.

They conduct many tests, including settling measurements which just observe settling *vs.* time, heat resistance of materials as a function of time, and long-term stability of fluids under shear with high voltages applied. They use one of two very sophisticated commercial instruments for this. Continuous testing is also done on actual devices, specifically engine mounts and shock absorbers.

Major concerns suggested were for the high voltages and settling. They would like materials to function at lower voltages, presumably because of lower currents and power. When asked about strengths, they responded that this depends upon applications; for the applications they want, the fluids are generally strong enough. This was a very refreshing response.

A major area of research they suggest should be in developing solutions to prevent settling, which again was a major concern. They also suggest research directed toward increasing strengths and reducing voltages. They also seemed to be putting more effort into fundamental aspects of the ER phenomenon, making simultaneous dielectric and rheological measurements.

6.4 THE PEOPLES REPUBLIC OF CHINA

ER RESEARCH PROGRESS IN CHINA

Yuan-Ze Xu
Institute of Chemistry, Academia Sinica, Beijing, China

1. Introduction

In contrast to the long history of ER research in the world, there was no explicit research at all on ER in China before 1988, although some researchers were aware of this interesting subject. Professor C. Wei of the Department of Vehicle Engineering in the Beijing Institute of Technology initiated this research in China in collaboration with Professor Bullough at Sheffield University in England. Meanwhile, Professor Y. Z. Xu, head of the Rheology Laboratory at the Institute of Chemistry of the Academia Sinica (ICAS) started to study ER responses comprehensively by means of a Rheometrics Mechanical Spectrometer, and to develop a new kind of dry ER fluid based on semiconducting polymers - a field studied for years at ICAS.

Professors Wei and Xu proposed a joint research project on "The ER Effect and Its Industrial Application" to the Chinese National Science Foundation (CNSF). With the support of the CNSF, they started a special research program (1989-1992) - the first ER research project in China. This project led by Wei and Xu emphasized development of efficient ER fluids based on research on the essential mechanism and on the design of new ER devices for the vehicle industry, with emphasis on clutches and damping devices.

Since then, ER research has spread to more places in China, mainly in the departments of mechanical engineering of the universities. An incomplete list would include:

1. Departments of Mechanical Engineering and of Chemical Engineering, Xi'an Jiaotong University, Xi'an.

2. Departments of Materials Science and of Instrumentation, Tsinghua University, Beijing.

3. Department of Mechanical Engineering, Halbin Technical University, Halbin, Heilungjiang Province.

4. Fudan University, Shanghai.

5. Shanghai Technical University, Shanghai.

6. Shenyang Institute of Architectural Engineering, Shenyang, Jilin Province.

The first investigations were supported by small grants from various sources, and sustained in their initial stages by the strong interest and curiosity of the researchers. ER research has entered the graduate programs of these institutions. The first Ph.D. in this field was given in 1991 at ICAS [3]. Further growth seems to be limited by depleted funding. The CNSF will allocate its support to a few researchers according to their performance in coming years. Some support from the government could be foreseen. A State Laboratory on Viscous Transmission Research, including an ER Center, will be established in Beijing Institute of Technology. Funding of several millions of yuan for its initiation is being arranged. International cooperation both in ER fluids and ER devices is encouraged. Such cooperative efforts might also increase the funding priority from the Chinese side.

2. Rheological Evidence of Physical Modeling [1-7]

At the present stage of research, it seems possible to correlate all rheological phenomena within a simple physical scheme where the driving force is the polarization attraction, although some structural aspects should also be considered [1,2]. It is generally recognized that the attracted particles aggregate into fibrous structures spanning the gap between electrodes, which causes enormous stresses which resist deformation. The theoretical calculations and molecular dynamics-like simulations are all based on this simple chain scheme. Our experiments, however, support an anisotropic percolated network scheme in the high concentration range. It was observed that the structure doesn't move much when the field is applied. Also, the surfaces of the particles adhere to the wall as well as to each other. The shearing zone is located at the center of the gap. The fact that the dimensionless form of volume fraction dependence on yield stress shows no field strength dependence also supports the percolated structure of agglomeration. Theoretical estimates of physical limitations should consider the geometry of the particles and their alignment.

An interesting experiment shows that the stress relaxes and then gradually recovers as flow stops while the electric field is still on. A possible explanation for this could be based on the assumption that the inclined structure formed by shearing remains. What this implies is yet to be studied.

The normal force between the electrodes during shearing would make the normal stress difference negative, but the measured data show a positive value larger than the shear stress at moderate shear rates. No explanation exists as yet.

It is observed that the yield stress decreases as the frequency of the alternating electric field increases. No ER enhancement has been seen above 20 KHz of electric field. This fact relates to the response time of the ER fluid. The determining factors for the response time are under investigation.

We are concerned with these mechanism problems and those described in the next section, which are closely related to the improvement of high performance ER fluids.

3. Design of Dry ER Fluids [2,3,5]

Considering the limitation of water-containing ER fluids, the effort of Xu and Liang *et al.* at ICAS took a new approach, without relying on water or ion migration. Strong polarization was realized by partially delocalized π-conjugated electron structure in organic semiconductors. High performance NC-semiconducting polymers were made by well controlled oxidation of polyacrylonitrile. The performance specifications of NC-polymer based ER fluids have reached an advanced level. In addition to high yield value, the evident advantages over other dry ER fluids are controllable conductivity, low density, low cost and good stability.

Efforts toward optimization or material tailoring according to engineering requirements are under way. This involves research on the relation between ER properties and fluid structure as well as on the control of polymer structure through processing conditions. Yield stress increases with particle concentration and particle conductivity in a certain range, but current density also increases in a similar way. Both yield stress and current density increase with temperature.

One of the key points, therefore, is to increase polarization of the particles while keeping the current between particles at an acceptable level. Basic research on forces and electron transfer at the interface should be very useful. To extend the working range of temperature without deterioration of properties is another difficult task. If these two principal obstacles can be removed, the industrial application of ER technology would be greatly accelerated.

Dr. Lu *et al.* of Xi'an Jiaotong University published a way to make ER fluids by the absorption of a polar fluid polyelectrolyte on a molecular sieve. High yield stresses (up to 30 KPa) were reported. The fluid seems to be a water-containing type. Prof. Wei also prepared an inorganic particle-based ER fluid, the details of which are to appear in the report of a recent meeting in the U.S.

In short, it is still not possible to identify an ER fluid which will meet the requirements of all ER devices. But it is not very difficult at the present time to tailor ER fluids to meet the particular needs of certain ER devices, especially over a relative narrow working temperature range.

4. Developing ER Devices

An industrial clutch and damper test station is established in Prof. Wei's lab at BIT [8,9]. Reports of successful tests are to be published this year.

Based on their ER fluids, Lu and his colleagues [10] analyzed the potential applications in fluid power transmission and control. The analysis showed that both flow rate and pressure could be controlled continuously with satisfactory linearity and possibly fast response. As an example, pilot tests show that an electro-hydraulic servo valve using the ER effect improves the effectiveness of pressure control in a stabilizer. Similar studies are being

carried out at more laboratories now, *e.g.*, a "pressure-adjustable ER bearing" in Tsinghua University.

Acknowledgment

Thanks are due to Dr. Reifung Liang for providing up-to-date information.

References

1. Xu, Y.Z. and R.F. Liang, "Electrorheological properties of semiconducting polymer-based suspensions", J. Rheol., 1991, 35(7), 1355.

2. Xu, Y.Z, R.F. Liang, T. Hao, Q.Z. Zhang, Z.M. Xu and Y.H. Chen, "Design of high performance dry electrorheological fluid", in "Electrorheological Fluids: Mechanism, Properties, Structure, Technology and Application" ed. by R.Tao, World Scientific, May, 1992.

3. Ruifeng Liang, "Electrorheological effect and electrorheological fluids" Ph.D. Thesis, Institute of Chemistry, Academia Sinica.

4. Hao, T., Y.Z. Xu, Y.H. Chen and Y. Huang, "Percolation transition in ER fluids", Proc. CCS Congress on Polymer Sci. (1992, Changcun); Annual Report 1991, Polymer Physics Laboratory, Academia Sinica.

5. Liang, R.F., Q.Z. Zhang, and Y.Z. Xu, "Some influential factors on electrorheological properties"' Proc. China-Japan Intern. Conference on Rheology" Peking Univ. Press (1991) 296.

6. Liang, R.F., T.Hao, Q.Z. Zhang and Y.Z. Xu, "Dynamic mechanical responses of ER suspensions", Annual report 1991, polymer Physics Lab.

7. Tian, H., Y.Z. Xu and Y.H. Chen, "Conducting mechanism study of electrorheological fluid", *ibid.*

8. Wei, C.G., "Research on ER technique and the prospect of its engineering application", J. Beijing Inst. Technol. 9, No.3 1989 (in Chinese).

9. Wei A.X. and C.G. Wei, "Research on some aspects of electrorheological technology and ER fluids", Proc. of 1st Intern. Symp. on Fluid Power Transmission and Control, (1991, Beijing) Beijing Inst. of Tech. Press (1991), p.625.

10. Lu, C.Y., T.Q. Lin, P.Z. He and W.X. Shi, "Electrorheological fluids and potential applications in fluid power transmission and control", ibid., p. 656.

6.5 FRANCE

6.5.1 RESEARCH ON ER FLUIDS IN FRANCE

G. Bossis

Université de Nice - Sophia Antipolis
Laboratoire de Physique de la Matière Condensée

1. Introduction

Eletrorheology is the intersection among three main disciplines: colloidal suspensions, rheology and dielectric fluids. Some laboratories in France, mainly from industry, work on the rheology of colloidal suspensions with very specific goals (ceramics processing, cements, paints, *etc.*); but fundamental research on the rheology of suspensions is restricted to a few academic laboratories (R. Blanc in Marseilles, D. Quemada in Paris VII, L. Petit in Lyon ENS and G. Bossis at the University of Nice).

Dr. Bossis, who has collaborated for many years with Dr. John F. Brady of the California Institute of Technology on a numerical approach to suspension rheology, became aware of the ER fluid problem in 1988 as a result of a seminar given at CalTech by an engineer from Boeing. Since then he has, with another CNRS researcher, E. Lemaire, developed at the University of Nice an experimental research program on ER and MR (magnetorheological) fluids based on rheometry and on rheo-optical measurements. This program was funded by the CNRS (Centre National de la Recherche Scientifique) and by Rhône Poulenc, a private chemical company.

In 1990, the publication of two papers on ER fluids, by G. Bossis in the well known French industrial journal *L'Usine Nouvelle* and by Bossis and Lemaire in *La Recherche,* raised the interest of companies in the automotive and chemical industries, and also in some specialized industrial domains such as medical robotics and the mechanics of electrical switching devices. To our knowledge, no practical ER applications have as yet been worked out, and interest has been tempered by difficulty in obtaining reliable commercial ER fluids. As far as we know, the only firms presently doing research in ER fluids are Rhône Poulenc (Aubervilliers) on synthesis of silicone oil-based ER fluids and Thomson Sintra (Sophia Antipolis) for monitoring of acoustic impedances. The automotive firm Renault is still on the starting block, and is seeking European collaboration for the development of damping devices.

Apart from the Laboratoire de Physique de la Matière Condensée (LPMC) in Nice, other publishable research in closely related areas is being carried out by Pierre Atten (Laboratoire d'Electrostatique et de Matériaux Diélectriques in Grenoble), who works on electrostatic forces between two macroscopic dielectric spheres in an insulating fluid, and by Dr. Fermigier (Ecole Supérieure de Physique et Chimie Industrielle de Paris), who studies the kinetics of aggregation of magnetic colloidal particles placed in a magnetic field.

2. Why Study Both ER and MR Fluids?

Magnetorheologicl fluids are most often ignored by the ER community because they suffer two principal handicaps: they tend to settle rapidly, and the time to switch on the magnetic field (ca. 10^{-1} to 10^{-2} s) prevents rapid changes in viscosity. Actually, sedimentation can be hindered by formation of a low yield stress gel, and the response time is rapid enough for many applications. The advantage of MR fluids comes from the absence of problems related to the finite conductivity of ER fluids in the presence of high fields (Joule heating, electrochemical degradation, screening of the field, dielectric breakdown, *etc.*) Furthermore, the yield stresses for relatively low magnetic fields (1000 Oersted) are of the same order of magnitude as those observed in ER fluids (1 to 5 KPa).

So long as the magnetic permeability remains relatively constant, interactions between particles in an MR fluid are equivalent to interactions between perfect dielectric particles. From a theoretical point of view, they give us a simpler system whose fundamental interactions are better understood. This allows us to check the validity of the models used to predict rheological behavior in the presence of the field from a knowledge of the polarization interactions. This method has been explored at the [illegible], and we find that the polarization theory, based either on a microstructure formed by isolated chains or by aggregates, slightly overpredicts the value of the yield stress (Bossis 1991, Lemaire 1991). This is a clear indication for ER fluids that we need to introduce conductivity effects in the model of forces between particles. This direction is being investigated by Dr. Atten and Dr. Foulc. They have also found that, due to ionization effects, the force between two macroscopic dielectric spheres at high field varies linearly with the field, instead of quadratically (Atten 1992).

3. Rheological and Rheo-optical Studies

The rheology of ER fluids is often simplified to that of a Bingham fluid. This is approximately true, but only for steady-state behavior. Many researchers have noticed a hysteresis at low shear rates, indicating that the breakdown of structure when stress is increased is not equivalent to its rebuilding when stress is decreased. Furthermore, the final structure obtained after this cycle is different from the initial rest structure; a second cycle will give a different rheogram from the first (Lemaire 1992). On the same ER fluid (silica particles in silicone oil), we have observed strong drifts of viscoelastic properties with time. This experiment has been realized with an oscillating-plate rheometer built by L. Petit (ENS, Lyon) and equipped with transparent electrodes. Correlations have been firmly established between change of structure observed by microscopy and time evolution of the shear modulus (Bossis 1992a). Structural parameters such as the thickness of the aggregates *vs.* their length have been measured at rest and can be predicted (Bossis 1991, 1992b), but no theory is presently able to predict the change of structure with flow.

Since many applications are based on transient or oscillating shear flows, proper monitoring of rheological response should take into account the slow evolution of structure with time.

Study of this phenomenon requires the use of rheological measurements where structure can be visualized simultaneously with viscosity measurements.

Recent References

Atten, P. and J. Foulc, *Comptes Rendus Acad. Sci.* (to appear) (1992).

Bossis, G. and E. Lemaire, "Yield stresses of magnetic suspensions", *J. Rheology* **35**, 1345 (1991a).

Bossis, G., E. Lemaire and Y. Grasselli, Proceedings of Conference on Electrorheological Fluids, Carbondale III, R. Tao (editor), World Science Publishers, Singapore (1991b).

Bossis, G., E. Lemaire, J. Persello and L. Petit, "Structuration and elasticity of electrorheological fluids", *Prog. Coll. Polymer Sci.* **89**, 135 (1992).

Lemaire, E. and G. Bossis, "Yield stress and wall effects in magnetic suspensions", *J. Phys. D* **24**, 1473 (1991).

Lemaire, E., G. Bossis and Y. Grasselli, "The rheology of electrorheological fluids", Langmuir (to appear) (1992a).

Lemaire, E., Y. Grasselli and G. Bossis, "Field induced structure in magneto- and electrorheological fluids", *J. Phys. II France* **2**, 359 (1992b).

6.5.2 THE UNIVERSITY OF GRENOBLE

Irvin M. Krieger
Department of Chemistry
Case Western Reserve University
May 27, 1992

Introduction

I had contacted Dr. Claude Wolff, Scientific Counselor at the Embassy of France in Washington, to inquire about ER research in France. He put me in correspondence with Prof. Jean-Michel Piau of *l'Institut Mécanique de Grenoble*, who directs a CNRS (Centre National de Recherche Scientifique) at Grenoble entitled *Laboratoire de Rhéologie.* This laboratory, affiliated with *l'Université Joseph-Fourier* and with *l'Institut National Polytechnique de Grenoble*, is the largest academic rheology laboratory in France. Dr. Wolff informed me that Prof. Piau is active in forming a cooperating group in France on "The Physics of Complex Media", one of whose themes will be ER fluids.

I have been given a NATO travel grant to allow me to coordinate a collaborative research project with two groups in France - at Strasbourg and Lyon. Since I had scheduled a visit to Lyon for May 25, I contacted Prof. Piau to try to arrange a visit to Grenoble that same week. Despite the short notice, Prof. Piau graciously invited me to come on May 27, and to present a seminar. I drove to Grenoble on May 26.

The Meeting

My seminar, on "Polymères et Dispersions: Similarités et Différences Rhéologiques", was scheduled for 10:00 on May 27, at the *Mécanique des Matériaux* building on the suburban campus of the University. I arrived at 9:00, and met briefly with Prof. Piau and Pierre Attané. Dr. Attané showed me the laboratory which houses their commercial rheometers before the seminar. The seminar was very well attended - some 35 persons in the audience. After the seminar I spoke further with Prof. Piau and with Albert Magnin, who heads a major subdivision of the laboratory. Dr. Magnin then showed me around the building, which is replete with instruments and processing equipment of their own design and construction. Afterward, I met with Pierre Atten; the name is similar to that of Pierre Attané, but Dr. Atten works at the *Laboratoire d'Electrostatique et de Matériaux Diélectriques*, another CNRS located near the center of Grenoble. Since Dr. Piau had another commitment, I was taken to a late lunch by Drs. Magnin and Atten. The visit ended at 3:00.

Laboratoire de Rhéologie

This laboratory is a unit of the CNRS, associated with and housed by the *Université Joseph-Fourier* and also affiliated with *l'Institut National Polytechnique de Grenoble.* The group consists of 45 research personnel, and occupies practically the entire *Mécanique des Matériaux* building. They expect to move to new quarters in the near future.

Prof. Piau directs the laboratory and one of its five subgroups, that on transference and processes. The other subgroups are headed by Albert Magnin (dispersions and gels), Pierre Attané (materials), Monique Piau (viscoelasticity) and Jean-Robert Clermont (modelization and numerical studies). Their research is focused on polymers (melts, melt fracture), dispersions (from colloids to coarse particles) and on adhesives and coatings.

The laboratory contains a wide range of commercial rheometers, plus many instruments of their own design and construction. They have a Rheometrics Mechanical Spectrometer and also the original Rheometrics stress rheometer. They have an up-to-date controlled stress rheometer from Carri-Med, and the latest Carri-Med version of the Weissenberg Rheogoniometer. (They also have two older Weissenberg rheogoniometers.) Their extrusion rheometer is a Göttfert capillary instrument. They have a large number of home-built specialized instruments, including extrusion rheometers, and several devices for flow visualization.

ER Studies

At present, Dr. Piau's *Laboratoire de Rhéologie* is doing no research on ER fluids. They expect to start in the near future, probably with a home-built instrument. There have been some indications of interest in ER devices from Peugeot, and in ER fluids from Rhone-Poulenc, but Dr. Piau is not aware of any extensive industrial research in France. Dr. Atten, of the *Laboratoire d'Electrostatique et de Matériaux Diélectriques,* also in Grenoble, is working on ER fluids and has published a few papers. His research is theoretical, investigating the mechanisms of the ER effect in water-containing dispersions. Dr. Atten is convinced that the problem is developing suitable ER fluids.

There is some ER fluid research going on in other French academic centers: in Paris, Nice and Lyon. This is described by Dr. Bossis in §6.5.1.

6.6 GERMANY: BAYER AG, LEVERKUSEN, FRG

Irvin M. Krieger
Department of Chemistry
Case Western Reserve University
December 6, 1991

This site visit was a one-day side trip, during a week-long visit to Strasbourg under a NATO travel grant in support of collaborative research. Contact was made November 27 *via* FAX to Dr. Günther Oppermann. The reply came on December 2 from Dr. Manfred Schulze, head of the silicone division, in care of my Strasbourg host. At his invitation, I arrived in Köln (Cologne) by train the evening of December 5, and stayed the night at the Ramada Hotel in Leverkusen.

Despite the short notice, Dr. Schulze had assembled some of his key people to discuss ER fluid research with me. Unfortunately, Dr. Oppermann was not able to attend. Although he has returned to work following his recent coronary bypass operation, he has been experiencing some problems of restabilization, and was not able to come to work that day. Present with Dr. Schulze were Dr. Gerwig Marquardt of the silicone division and two people from central research: Dr. Robert Bloodworth and Dr. Siegfried Storp, who leads the colloid characterization group in central research.

We met in Dr. Schulze's office from 9:00 until 11:30. I first explained the objective and modus operandi of our study, and the composition of our task force. The fact that we will furnish copies of the report to cooperating organizations was, I feel, a major factor in their willingness to discuss Bayer's program. Dr. Schulze told me of a recent research report issued by Frost and Sullivan which they have purchased (*ca.* $1500) and have found to be thorough and useful. He believes that reading this report can save us considerable effort.

There are, of course, several aspects of their work which Bayer is not free to disclose at this time. Some of these, however, will appear in patents which are currently being pursued. The discussions which took place that morning follows in question-and-answer (Q and A) format (although the discussion did not always follow this structure).

Q: How long has Bayer been involved with ERF?

A: Intensively since around 1983. It started around 1980 when Bayer acquired Metzeler Kautschuk, a rubber company with a product line similar to that of Lord Corporation, including motor mounts and shock absorbers. Metzeler has since been sold to Pirelli, but Bayer's interest continues. (They believe that Metzeler is still working on ERF.)

Q: Where are Bayer's current efforts directed?

A: Bayer's interest is in manufacturing and selling ER fluids (*i.e.*, not devices). The work centers in the silicone division, because silicones are considered to be superior media for ER fluids. (Silicones are insulators; their density is near 1; they are stable, safe and environmentally acceptable; they are available in a wide range of viscosities and their viscosity does not vary strongly with temperature.) Earlier work used inorganic particles, but their moisture requirements made them sensitive to temperature variations, hydrolysis, *etc*. Also, their high densities produce rapid settling. Current work uses organic polymers as particles, with various types of stabilizers.

Q: What has Bayer published on ER fluids?

A: There are a number of patents granted and pending; Dr. Schulze will send me copies of those which have been issued. Several documents were written by Dr. Oppermann for internal use and for distribution to their customers. Dr. Schulze gave me two of these, as well as a copy of Research, their house magazine, which contains a popular article on "smart fluids".

Q: What do you consider to be the most promising applications for ER fluids?

A: The only ERF application in current use is to control tension of a wire while it is being wound on a spool. The chief area for future applications is in the automotive field: motor mounts, vibration cushions, shock absorbers and clutches for low-power applications such as fans and air-conditioners. (Heavy power applications will require excessive volumes of fluid and huge clutches.) Control of hydraulic fluid flow will use indirect means, where the electro- rheological device controls the flow of a conventional hydraulic fluid. There should be applications in robotics, and in such devices as garage-door openers and Nautilus-type exercise machines. Electrocoagulation, usually a negative development, can be useful in adhesives and sealants, to hold them in place and keep them from flowing while they harden. There are many potential military applications of ER fluids: to reduce recoil from cannons; to control aiming of guns while tanks are in motion; to reduce propeller noise in submarines; to modify airfoil shapes so as to provide optimum profiles for different velocities. Bayer expects to exploit a new patent by Dr. Oppermann on the use of the electrorheological current, which increases regularly with the rate of flow of the ER fluid. This current can be used as a sensor, *e.g.*, in a feedback circuit to control flow rate by adjusting the applied potential.

Q: Do you know of any applications of ER fluids that will favorably affect energy consumption?

A: A lot of energy is wasted due to vibration, and much of this waste could be eliminated by use of ERF technology. A "blue sky" application is the use of ER fluids to damp building motions during earthquakes. If this could be made to work, it would have major implications on energy production, by protecting atomic energy plants against earthquake damage. (Note here that airfoil shape modification

through ER technology, mentioned under military applications, would have a very beneficial effect on aircraft fuel consumption.)

Q: What do you regard as the principal problems in developing ERF technology?

A: Obtaining ER fluids with the required rheology and stability. Their cost will be reasonable, as long as they can be produced in large quantity. There will be some problem in reproducing fluid properties from batch to batch. With the present state of the art in electronics, small and inexpensive power supplies and control circuitry should present no difficulty. In view of the low current requirement, the high voltages needed for ERF operation should propose no serious safety problem. Although there are as yet no cheap devices to produce high AC voltages from 12- or 24-volt battery power, these will come once the demand is demonstrated.

Q: Are there problems in measuring ERF properties?

A: Characterization must be made over wide ranges of temperature, particle concentration, field strength and shear rate. Conventional laboratory viscometers do not produce the high shear rates encountered when ER fluids flow through narrow gaps. It is also difficult to simulate other conditions to which ER fluids are subjected, *e.g.*, simultaneous high field, flow and centrifugation.

Q: One final question. In what areas would Bayer like to see fundamental research carried out in order to provide a better scientific basis for ERF technology?

A: We need to develop the theory of the ER effect, especially as it relates to the chemical and particulate structure of the fluid. What is needed is the counterpart, for nonaqueous systems in the presence of electrostatic fields, of the Derjaguin-Lando-Verwey-Overbeek theory of aqueous systems. How do the dipoles form? What role is played by conductivity of the particles? How do surface effects influence interparticle contacts and the formation of particle chains?

After an elegant lunch at Bayer's guest inn, Dr. Storp took me to the research laboratory, where I met Mr. Neumann and Dr. van Lent. Mr. Neumann demonstrated an ERF shock absorber which has been functioning for six years, and an ERF clutch which operates a fan. They then showed me a video presentation on ER fluids, prepared for Bayer's stockholders, followed by a clip on ER fluid research from a recent German television show. Rheological characterization of ER fluids was accomplished mainly by modifying conventional rotational viscometers to apply an electric field.

The visit concluded with a tour of Bayer's colloid and surface science research laboratories, where Dr. van Lent showed me the equipment used for characterizing ER fluids and other dispersions.

Part 7.1

ELECTRORHEOLOGICAL LITERATURE

1949 - 1992

YEAR	AUTHOR	AFFILIATION	TITLE	REFERENCE
1992	Coulter,J.P.; Weiss, D.; Carlson, J.D.	Lord Corp. Cary, N.C. USA	Electrorheological Materials and their usage in Intelligent Material Systems and Structures. Part II: Applications	Recent Advances in Sensory and Adoptive Materials and Their Applications. CA Rogers, Ed., Technomic Public. Lancaster PA.
1992	Weiss, K.D.; Coulter, J.P., Carlson, J.D.	Lord Corp. Cary, N.C. USA	Electrorheological Materials & Their Usage in Intelligent Material Systems & Structures Part I: Mechanisms, Formulations and Properties.	Recent Advances in Sensory and Adaptive Materials and Their Applications C.A. Rogers, ed., Technomic Pub. Lancaster, PA
1992	Jordon, T.C. Shaw, M.T. McLeish, T.C. B.	University of Connecticut Storrs CT, U.S.A.	Viscoelastic Response of Electrorheological Fluids, I Frequency Dependence	Journal of Rheology **36** (3) 441-463.
1992	Davis L.C.	Ford Motor Co. , Dearborn, MI, U.S.A.	Polarization Forces & Conductivity Effects in Electrorheological Fluids	Journal Applied Physics **72** (4) 1334-1340
1992	Davis L.C.	Ford Motor Co. , Dearborn, MI , U.S.A.	Finite Element Analysis of Particle - Particle Forces in Electrorheological Fluids	Applied Physics Letters **60** (3) 319 - 321.
1992	Duclos, T.G. Carlson, J.D. Chrzan, M.J. Coulter, J.P.	Lord Corp. Cary, N.C. U.S.A.	Electrorheological Fluids - Materials & Applications	Intelligent Stuctural Systems; H.S. Tsou and G.L. Anderson, Eds. Kluwer Academic Publisher.

YEAR	AUTHOR	AFFILIATION	TITLE	REFERENCE
1992	Kana, R.C. Shaw, M.T.	University of CT. Storrs CT., U.S.A.	Electrorheological Fluids based on PBZT Particles With Controlled Geometry	Theoretical & Applied Rheology Eds., P. Moldenaers & R. Keunings Elsevier, Sci. Publisher pp 766 - 768.
1991	Otsubo, Yasufumi, Sekine, Masahiro; Katayama, Shingo	Chiba Univ, Chiba-shi, Japan	Effect of surface modication of colloidal silica on the electroheology of suspensions.	J Colloid Interface Sci **146** (2) 395-404
1991	Shiga, Tohru ; Ohta, Tadashi; Hirose, Yoshiharu; Okada, Akane; Kurauchi, toshio	Toyota Central Research & Lab Inc., Aichi, Japan	Electroviscoelastic - effect of polymer gel containing fine particles	Kobunshi ronbunshu **48** (1) 47-51
1991	Simmonds, A.J.	Sheffield City Poly Technical, Sheffield, England	Electro - rheological valves in a hydraulic circuit.	IEE Proc Part D Control Theory Appl **138** (4) 400-404
1991	Chen, Y; Sprecher, A. F.; Conrad, H	Material Sci Dept. North Carolina State Univ. USA	Electrostatic particle-particle interactions in electrorheological fluids	J. Appl. Phys., **70** (11), 6796-803
1991	Tao, R.; Sun, J.M.	Dept. Phys. South Ill. Univ Carbondale ILL. USA	Ground state of electrorheological fluids from Monte Carlo simulations	Phys, Rev. A, **44** (10), R6181-R6184

YEAR	AUTHOR	AFFILIATION	TITLE	REFERENCE
1991	Tao, R.	Dept. Phys. South Ill. Univ. Carbondale ILL. USA	Electric Field induced solidification - theory of electrorheology fluids	Condens, Matter Theor., **6**, 155-60
1991	Jordan, Therese C.; Shaw, Montgomery T.	GE Corp. Res Schenectedy N.Y USA	Electrorheology	MRS. Bull., **16** (8), 38-43
1991	Burchill, P.J.	Mater. Res. Lab. Ascot vale Australia	Electrorheological Fluids and their applications	Mater. Forum **15** (3) 197-204
1991	Hemp, J.	Cranfield Inst. Tech. Cranfield U.K.	Theory of dilute electro-rheological fluids	Proc. R. Soc. London, Ser. A, **434**(1891), 297-315
1991	Otsubo, Yasufumi	Chiba Univ. JAPAN	Electrorheological properties of barium titanate under oscillatory shear	Colloids Surf., **58** (1-2), 73-86
1991	See, Howard; Doi, Masao	Nagoya University Nagoya, Japan	Aggregation kinetics in electro-rheological fluids	J. Phys. Soc. Jpn., **60** (8), 2778-82

YEAR	AUTHOR	AFFILIATION	TITLE	REFERENCE
1991	Otsubo, Yasumuml, Sekine, Masahiro, Katayama, Shingo		Effect of surface modification of colloidal silica on the electrorheology of suspensions	J. Colloid Interface Sci., 146(2) 395-404
1991	Block, H.; Kelly J.P. Watson, T.	Cranfield Inst. Tech. Cranfield U.K.	Semiconducting polymers as electro-rheology substrates	Spec. Publ. - R. Soc. Chem., 87 (High Value Polymer), 151-73
1991	Lazareva, G. G., Korobko, E.V. Ragotner, M.M. Alimov, M.F.	Inst. Teplo-Massoobmena Im. Lykova Minsk USSR	The electrorheological activity of cellulose and cellulose derivs. for oil dispersions	Kolloidn. Zh., 53 (2), 266-71
1991	Evans., M.W. Heyes, D.M.	R. Holloway & Bedford New Coll. Univ. Egham/Surrey U.K.	Group theory statistical mechanics and simulation studies of electrorheology	J. Phys. Chem, 95 (13), 5287-92
1991	Chrzan, M.;Coulter, J.P.	Lord Corp. Cary, North Carolina	A Numerical Investigation of Electrorheological Material Behavior	Proceeding of Conference on Electrorheological Fluids, Carbondale, Ill. Oct. 15-16 1991. R. Tao ed., World Sci Pub., Singapore
1991	Klingenberg, D.J. Van Swol, Frank, Zukoski ,C. F.	Dept. Chem. Eng. Univ. of Illinois Urbana Ill. USA	The small shear rate response of electrorheological suspensions I. Simulation in the point-dipole limit.	J. Chem. Phys., 94 (9), 6160-9

YEAR	AUTHOR	AFFILIATION	TITLE	REFERENCE
1991	Klingenberg, D.J. Van Swol, Frank; Zukoski, C.F.	Dept. Chem. Eng. Univ. of Illinois Urbana Ill. USA	The small shear rate response of electrorheeological suspensions.II Extention beyond the point-dipole limit.	J. Chem, Phys. 94-(9), 6170-8
1991	Klingenberg, Daniel J; Dierking, Diane; Zukoski, Charles F.	Dept. Chem. Eng. Univ. of Illinois Urbana, ILL. USA	Stress-transfer mechanisms in electrorheological suspensions	J. Chem. Soc., Faraday Trans., 87(3) 425-30
1991	Shiga, Tohru; Ohta, Tadashi; Hirose, Yoshiharu; Okada, Akane; Karauchi, Toshio	Toyota Central Aichi, Japan	Electroviscoelastic effect of polymer gel containing fine particles	Kobunshi Ronbunshu, 48 (1), 47-51
1991	Klingenberg, Daniel Joseph	University of Illinois Urbana, Ill USA	The electrostatic polarization mechanism of the electrorheological response	269 pp. Avail. Univ. Microfilms Int., Order No. DA9124444
1991	Ermolenko, I.N.; Shul'man, Z.P. Lazareva, T.G.; Korobko, E.V.	Inst. Obshch. Neorg. Khim Minsk, USSR	Cellulose fillers for electrorheological composites	Dokl. Akad, Nauk BSSR, 34(9), 812-14
1991	Whittle, M.	Dept. of Chem. University Manchester, U.K.	Computer simulation of an electrorheological fluid	J. Non-Newtonian Fluid Mech., 37(2-3), 233-63

YEAR	AUTHOR	AFFILIATION	TITLE	REFERENCE
1991	Huang, Z;Spurk, Joseph H.	Tech. Hochsch Darmstadt Ger.	Electroviscosity effect as a result of electrostatic force	Rheol, Acta, 29(5), 475-81
1991	Halsey, Thomas C., Toor, Will	Univ. of Chicago Chicago, Ill USA	Structure of electrorheological fluids	Phys. Rev. Lett., 65(22), 2820-3
1991	Tanaka, K.; Yoshida, T.; Koyama, K.	Yamagata Univ. Yonezawa, Japan	Transient Response of ER Fluids	Proceeding of Conference on Electrorheological Fluids, Carbondale, Ill. Oct. 15-16 1991. R. Tao ed.; World Sci: Pub. Singapore.
1991	Ginder, J.M.; Elie, L.D.	Ford Motor Co. Dearborn, MI USA	Optical Probes of Structure Formation in Electrorheological Fluids	Proceedings of the Conference on Electrorheogical Fluids, Carbondale, Ill. Oct 15-16, 1991. R. TAO ed., World Sci. Publ., Singapore
1991	See, H.; Doi, M.	Nagoya Univ. Nagoya Japan	Aggregation Kinetics in Electro-Rheological Fluids.	J. of the Phys. Soc. Japan 60 (8) 2778-27782.
1991	Hill, J.C.; Van Steinkeste, T.H.	Ford Motor Co.	Response Times of ER Fluids	J. applied Physics 70 (3) 1207-1211

YEAR	AUTHOR	AFFILIATION	TITLE	REFERENCE
1991	Burchil, P.J.	MRL Australia	Electrorheological Fluids and their Application	Materials Forum 15, 197-204
1991	Stangroom, J.E.	ER Fluids Dev. England	Basic Considerations in Flowing Electrorheological Fluids	Journal of Statistical Physics 64 (5-6) 1059-1072
1991	McLeish, T.C.B. Jordan, T.C. Shaw, M.T.	University of Connecticut Storrs CT, U.S.A.	Viscoelastic Response of Electrorheological Fluids, II Field Strength & Strain Dependence	Journal of Rheology 35 (3) 427-448
1991	Conrad, H. Sprecher, A.F.	North Carolina State University Raleigh N.C. , U.S.A	Characteristics & Mechanisms of Electrorheological Fluids	Journal of Statistical Physics 64 1073- 1092.
1991	Stangroom, J.E.	ER Fluids Dev. Sheffield, U.K.	Basic Considerations in Flowing Electrorheological Fluids.,	Journal of Statistical Physics 64 1059 - 1072.
1991	See, H & Doi, M.	Nagoya University, Nagoya, Japan	Shear Resistance of Electrorrheological Fluids Under Time Varying Electric Fields.	Journal of Rheology 36 (6) 1143 - 1163.

YEAR	AUTHOR	AFFILIATION	TITLE	REFERENCE
1990	Bailey, P; Gillies, D.G; Sutcliffe, L.H.	Bedford New Coll. Univ. of London Egham/Surrey, U.K.	High-voltage electron paramagnetic resonance study of some electro-rheological fluids	J. Chem. Soc., Faraday Trans., 86(19), 3309-11
1990	Otsubo, Yasufumi, Watanabe, Koichiro	Chiba University Chiba, Japan	Electrorheological behavior of barium titanate suspensions	Nihon Reorji Gakkaishi, 18(3), 111-16
1990	Shul'man, Z.P., Kulichikhin, V.G.; Dreval, V.E.; Korobko, E.V.	Ural. Gos. Univ. Sverdlousk, USSR	Thixotropic properties of electrorheological suspensions under continuous deformation	Inzh.-Fiz. Zh., 59(1), 34-40
1990	Shulman, Z.P. Matsepuro, AD	USSR	Electrorheological Effect In Suspensions of Metal Oxides	Reokinet I Konvektsiya Strukturiruyushchikhsya Kompozitsii, Minsk 89-97
1990	Asada, Tadahiro, Uchida, Kazuho	Kyoto Univ. Kyoto Japan	Electrorheological properties of liquid crystals. I. Preliminary experiments	Chem. Express, 5(7), 449-52
1990	Webb, Nigel	Castrol Res. Reading/Bershire U.K.	Electrorheological fluids	Chem. Br., 26(4), 338-40

YEAR	AUTHOR	AFFILIATION	TITLE	REFERENCE
1990	Gow, C. J.; Zukoski. C.F.	Univ. of Illinois Urbana, ILL USA	The electrorheological properties of polyaniline suspensions	J. Colloid Interface Sci. 136(1), 175-88
1990	Block, Harry; Kelly, J.P.; Qin, A., Watson, T.	Cranfield Inst. Tech. Cranfield/Bedford U.K.	Materials and mechanisms in electrorheology	Langmuir, 6(1), 6-14
1990	Klingenberg, D.J. Zukoski, C.F.	Univ. of Illinois Urbana, Ill USA	Studies on the steady-shear behavior of electrorheological suspensions	Langmuir, 6(1), 15-24
1990	Wang, K.C.; Carey, G.F.	Univ. of Texas, Austin, TX USA	Adaptive grids for coupled viscous flow and transport	Computer Methods in Applied Mechanics and Engineering 82 (1-3) 365-383
1990	Wada, Ben K., Fanson, James I., Crawley, E.F.	California Inst. of technology, Padadena, CA USA	Adaptive stuctures	Mech Eng. 112 (11) 41-46
1990	Hagele, K.H. Engelsdorf, K.; Mettner M. Panther, M; Tran, O. Ngoc; Rubel, E.	Torino Italy	Continuously adjustable shock absorbers for rapid-acting ride control systems (RCS).	Proceedings-Society of Automotive Engineers. Publ. by SAE, Warrendale PA, USA p. 37-46

YEAR	AUTHOR	AFFILIATION	TITLE	REFERENCE
1990	De Meis, Richard		Push-button solids	Aerosp-Am 28 (11) 34-35
1990	Whittle, M.	Univ. of Manchester, Manchester, Engl	Computer simulation of an electrorheological fluid	J Non Newtonian Fluid Mech 37 (2-3) 233-63
1990	Goldstein, Gina	Mechanical Engineering, New York N.Y. USA	Electrorheological fluids, Applications begin to gel.	Mech Eng. 112 (10) 48-52
1990	Morishita, Shin; Mitsui, Jun'ichi		Squeeze film damper as an application of electrorheological fluid.	Nippon Kikai Gakkai Ronbunshu C Hen 56 (529) 2367-2372
1990	Lazareva, T.G.; Korobko, E.V., Ermolliendo, I.N. Shul'man, Z.P.		Effect of an electric field on the rheological properties of a suspension of titanium dioxide in solutions of cellulose ethers.	Colloid J USSR 52 (1) 119-122
1990	Yanovskii, Yu.G. Korobko, E.V. Barancheeva, V.V.	Academy of Sciences BSSR Minsk, USSR	Characteristics of the rheological behavior of electrosensitive dispersions of different structural-rheological types.	J Eng. Phys 57 (2) 892-897

YEAR	AUTHOR	AFFILIATION	TITLE	REFERENCE
1990	Morishita, Shin; Mitsui, Jun'ich, Kuroda, Yoji		Controlable shock absorber as an application of Electro-Rheological fluid	Nippon Kikai Gakkai Ronbunshu C Hen 56 (524) 928-934
1990	Brown, Alan S.		Materials get smarter	Aerosp Am 28 (3) 30-34, 36
1989	Gandhi, M.V., Thompson, B.S. Choi, S.B.	Michigan State Univ. East Lansing, MI, USA	Proof-of-concept experimental investigation of a slider-crank mechanism featuring a smart dynamically tunable connecting rod incorporating embedded electro-rheological fluid domains.	J Sound Vib 135 (3) 511-515
1989	Shulman, Z.P. Korobko, E.V., Yanovskii, Yu.G.	(BSSR Acad of Sciences, Minsk, USSR)	Mechanism of the viscoelastic behaviour of electrorheological suspensions	J Non Newtonian Fluid Mech. 33 (2)181-196
1989	Gandhi, M.V., Thompson, B.S. Choi, S.B.; Shakir,S.	Michigan State Univ. East Lansing, MI, USA	Electro-rheological-fluid-based articulating robotic systems.	J Mech Transm Autom Des 111 (3) 328-336
1989	Gast, Alice P., Zukoski, Charles F.	Dept. Chem. Eng. Stanford Univ. Stanford, CA. USA	Electrorheological fluids as colloidal suspensions	Adv. Colloid Interfae Sci., 30(3-4), 153-202

YEAR	AUTHOR	AFFILIATION	TITLE	REFERENCE
1989	Klingenberg , D.J.; Van Swoll, Frank,; Zukoski, C.F.	Univ. of Illinois Urbana, Ill USA	Dynamic simulaiton of electrorheological suspensions	J. Chem, Phys, 91(12), 7888-95
1989	Shulman, Z.P. Korobko, E.V. Yanovskii, Yu. G.	A.V. Lykov Heat Mans Tr. Inst. Minsk, USSR	The mechanism of the viscoelastic behavior of electrorheological suspensions	J. Non-Newtonian Fluid Mech. 33 (2), 181-96
1989	Jordan, Therese C; Shaw Montgomery T.	Univ. of Connecticut Storrs, CT USA	Electrorheology	IEEE Trans. Electr. Insul., 24(5), 849-78
1989	Korobko, E.V., Matsepuro, A.D., Krasnikova, N.P.	Inst. Teplo-Massoobmena IM. Lykova, Minsk, USSR	Rheological behavior and thixotropy of electrorheological suspensions in different temperature -velocity regimes.	Vestsi Akad, Navuk BSSR, Ser. Fiz-Energ. Navuk, (2), 66-71
1989	Jordan, Therese Coste	University Storrs, CT USA	Electrorheological fluids: an investigation of structural mechanisms	Avail. Univ. Microfilms Int., Order No. DA9010178
1988	Block, H., Kelly, J.P.	Cranfield Inst. of Tech. Cranfield/Bedfordshire UK	Electro-rheology	J. Phys. D. Appl. Phys, 21(12), 1661-77

YEAR	AUTHOR	AFFILIATION	TITLE	REFERENCE
1988	Adriani, Paul M., Gast , Alice P.	Stanford Univ. Stanford, CA USA	A microscopic model of electrorheology	Phys,. Fluids, 31(10), 2757-68
1988	Duclos, T.G. Acker, D.N. Carlson, J.D.	Lord Corp. Cary, N.C. USA	Fluids That Thicken Electrically	Machine Design Jan 21 p. 42-46
1987	Stanway, R. Sproston, J.L. Stevens N.G.	Univ. of Liverpool Liverpool, England	Non-Linear Modelling of an Electro-Rheological Vibration damper.	J. Electrostatics 20 (2)167-184
1987	Specher, A.F. Carlson, J.D., Conrad, H.	North Carolina Univ. Raleigh, NC USA	Electreorheology at small strains and strain rates of suspensions of silica particles in silicone oil.	Mater Sci Eng 95 (1-2) 187-197
1987	Shulman, A.P. , Khusid, B.M., Korobko, E.V. Khizhinsky, E.P.	BSSR Acad of Sciences, Minsk USSR	Damping of mechanical-systems oscillations by a non-newtonian fluid with electric-field dependent parameters.	J Non Newtonian Fluid Mech 25 (3) 329-346
1987	Ermolenko, I.N. Shulman, Z.P. Lazareva, T.G. Korobko, E V.	Inst. Obshch Neorg. Khim Minsk, USSR	Electrorheological effect of titanium dioxide suspension in polymer binders	Dokl. Akad, Nauk BSSR, 31(10), 906-8

YEAR	AUTHOR	AFFILIATION	TITLE	REFERENCE
1987	Conrad, Hans., Sprecher, Arnold F.	North Carolina University Raleigh, N.C. USA	Characteristics of electroheological fluids	Ind.-Univ. Adv. Mater, conf., Proc., Conf. TMS Annu. Meet., 63-76. Edited by Morse, Jerome, G. Metall. Soc. , Warrendale, PA.
1987	Stevens, N.G.; Spronston, J.L.; Stanway, R.	Univ. of Liverpool, Liverpool, Engl.	Expermental Study of Electro-Rheological Torgue Transmission	J Mech Transm Autom Des 110 (2) 182-188
1987	Korobko, E.V., Bukovich, I. V., Chobot M. A. Artemenkov, A.N. Kornienko, A.A.	Inst. Teplo. Massoobmena Minsk, USSR	Characteristics of the propagation of ultrasound in electrorheological suspensions	Vestsi Akad, Navuk BSSR, Ser. Fiz. -Energ. Navuk, (2) 105-9
1987	Novikova, Z.A., Matsepuro, A.D.	Acad. of Sci. BSSR Minsk, USSR	Flow of Electrorheological suspensions based on Aerosil at elevated temperatures	Reofizika, 52-6. Edited by: Shulman Z.P. Korobko, E.V. Akad. Nauk BSSR, Inst. Teplo Massoobmena im. a.V. Lykova Minsk, USSR.
1987	Duclos, T.G.	Lord Corp. Cary, N.C. USA	An Externally Tunable Hydraulic Mount which uses Electro-Rheological Fluid	Proceeding of the 1987 Noise & Vibration Conf. April 29-30 pp 131-137
1987	Stevens, N.G.	University of Liverpool Liverpool England	Mechanical Properties of ER Fluids	J. of Applied Mech. Trans. A.S.M.E.; 54 (2) 456.

YEAR	AUTHOR	AFFILIATION	TITLE	REFERENCE
1986	Vinogradov, G.V. Shulman, Z.P. Yanovskii, YU.G.; Barancheeva, V.V. Korobko, E.V. Bukovich, I.V.	Academy of Sciences BSSR Minsk, USSR	Viscoelastic Behavior of electrorheological Suspensions	J Eng Phys 50 (4) 429-432
1986	Brooks, D. ; Hjelm, C.; Marshall, L. Zukoski, C.F. Goodwin, J.	University of Bristol Bristol, England	Viscoelastic Studies on an Electro-Rheological FLuid	Colloids Surf 18 (2-4) June 1986
1985	Shul'man, Z.P. Khusid, B.M.; Khizhinskii, B.P.; Korobko, E.V.	Acad of Sciences of the Belorussian SSR, Minsk, USSR	Characteristics of an Electrorheological Damper in a Vibration Insulator.	J. Eng. Phys 52 (2) 175-179
1985	Fomenko, E.B. Kovganich, N.Ya., Deinega, Yu.F.	Acad. of Sci. BSSR Minsk, USSR	Electrorheological and Dielectric Study of Ferrite Suspensions in Hydrocarbons.	Sov Surf Eng appl Electrochem (1) 52-55
1985	Sugimoto, Noboru	Ministry of Labor, Research Inst of Industrial Safety, Tokyo,Jpn	Application of Winslow's Effect to the New Actuators	J Jpn Soc Lubr Eng 30 (12) 859-864
1985	Korobko, E.V. Chernobai, I.A.	Academy of Sci BSSR Minsk, USSR	Influence of an external electric field on the propagation of ultrasound in electrorheological suspensions.	J Eng Phys 48 (2)153-157

YEAR	AUTHOR	AFFILIATION	TITLE	REFERENCE
1985	Stevens, N.G. Sproston, J.L. Stanway, R.	Univ. of Liverpool, Dep of Mechanical Engineering, Liverpool, England	Influence of pulsed D.C. Input Signals on Electrorheological Fluids	J Electrostatics 17 (2) 101-191
1984	Anaskin, I.F.; Gleb, V.K.; Korobko, E.V.; Khizhinskii, B.P. Khusid, B.M.	Acad of Sciences BSSR Minsk, USSR	Effect of External Electric Field on Amplitude-Frequency Characteristics of Electrorheological Damper.	J Eng Phys 46 (2) 233-238
1984	Shulman, Z.P., Matsepuro, A.D.	Academy of Sci. BSSR Minsk, USSR	Flow of Highly Concentrated Electrorheological Suspensions	Teplo-Massoperinos: Teor. Prakt., 64-5 Ed. by R-I Soloukhin Akad, Nauk BSSR Minsk, USSR
1984	Deinega, Yu. F Vinogradov, G.V.	Heat & Mass Tr. Inst. Minsk, USSR	Electric Fields in the Rheology of Disperse Systems	Rheologica Acta 23, 636-651.
1983	James E. Stangroom	Univ. of Sheffield Sheffield U.K.	Electroheological fluids	Phys. Technol, 14 (6), 290-6
1983	Makatun, V.N., Lapko, K.N. Matsepuro, A.D. Tikavyi, V.F.	Beloruss GOS. Univ. Minsk, USSR	Charge transfer in the disperse phase of electrorheological suspensions	J- Eng Phys. 45 (4) 1138-1142

YEAR	AUTHOR	AFFILIATION	TITLE	REFERENCE
1983	Shulman, Z.P. Matsepuro, AD.	Academy of Sci. BSSR, Minsk, USSR	The Nature of Charge Carriers in Electrorheological Suspensions.	Teplo Massoperenos. Teor. Prakt. Prilozh, 19-21
1982	Shulman, Z.P.	Acad of Sciences of the BSSR Minsk, USSR	Utilization of Electric and Magnetic Fields for Control of Heat and Mass Transfer in Dispersed Systems (Suspension)	Heat Transfer Sov Res 14 (5) 1-23
1982	Gorodkin, R.G. Korobko, E.V. Ragotner, M.M. Bukovich, I.V.	Acad of Sciences of the B Minsk, USSR	Effect of Temperature on the Dynamics of Electrorheological Suspensions	Heat Transfer Sov. Res 14 (2) 45-51
1982	Gorodkin, R.G.; Gleb, V.K.; Korobko, E.V.	Acad. of Sci. BSSR Minsk, USSR	Effect of vibration on shear flow of electrorheological suspensions in a planar condenser channel	Nov. Reol. Polim., Mater. Vses. Simp. Reol., 11th, Meeting 2 229-33. (1980)
1982	Chertkova, O.A., Petrzhik, G. G., Trapeznikov, A.A.	Inst. FIZ. KHIM. Moscow, USSR	Influence of the nature of a surfactant on the electrorheological effect of nonaqueous dispersions	Colloid. J. USSR 44 (1) 68-74
1982	Brooks, D.A.	Lazer Engineering, U.K.	Electro-Rheological Devices Provide Hydraulic/Electronic Interface	Design Eng. Nov. pp 41-43

YEAR	AUTHOR	AFFILIATION	TITLE	REFERENCE
1981	Shulman Z.P. Matsepuro, A.D., Kordonskii, V.I., Editors	Acad Of Sci. BSSR Minsk, USSR	Electrorheology: Studies and applications	Akad. Nauk. SBBR, Inst. Teplo Massoobmena; Minsk, USSR, 196 pp.
1981	Matsepuro, A.D.	Acad. of Sci. BSSR Minsk, USSR	Structuring in an electric field and composition of electrorheological suspensions	Elektroreol. Issled. I Pril., Minsk 27-51
1981	Deinega, YU. F	Acad of Sci. BSSR Minsk, USSR	The Electrorheology of Disperse Systems.	J. Eng. Phys (USA) 18 (6) 679-82
1981	Gorodkin, R.G.; Blokh. G.M.; Bukovich, I.V., Demidenko, T.A.	Acad. of Sci. BSSR Minsk, USSR	Flow of electrorheological suspensions in channels of different geometry	Elekroreol. Issled. I Pril., Minsk 52-65
1981	Trapeznikov, A.A. Petrzhik, G.G., Chertkova, O.A.	Inst. FIZ. Khim. Moscow, USSR	Electrorheological properties of nonaqueous dispersions of titanium dioxide and silicon dioxide in relation to the concentration and moisture content of a filler.	Kolloidn. Zh., 43 (6), 1134-40
1981	Shulman, Z.P. Gorodkin, R.G.; Korobko, E.V. Gleb, U.K.	Acad of Sci. BSSR Minsk, USSR	Electrorheological effect and its possible uses.	J Non Newtonian Fluid Mech 8 (1-2) 29-41

YEAR	AUTHOR	AFFILIATION	TITLE	REFERENCE
1980	Petrzhik, G.G., Chertokova, O.A. Trapeznikov, A.A.	Inst. FIZ. Khim Moscow, USSR	Electrorheological effect in nonaqueous suspensions of different compositions as a function of electric field parameters.	Dokl. Akad. Nauk SSSR, **253** (1), 173-7 (Phys Chem.)
1980	Likhterov, S.D.; Shor, G.I.; Lapin, V.P.; Fufaev, A.A.	Vses. Nauchno-Issled. Inst. Moscow, USSR	Electroviscous effect in oils containing additives	Khim. Tekhnol.Topl. Masel, (1), 43-5
1979	Gorodkin, r.G., Korobko, Ye.V., Blokh, G.M. GLEB, V.K.; Sidorova, G.I., Ragoiner, M.M.	Acad. of Sci. BSSR Minsk, USSR	Applications of the Electrorheological Effect in Engineering Practice.	Fluid Mech Sov Res **8** (4) 48-61
1978	Deinega, Yu. F.	Heat of Mass Tr. Inst. Minsk, USSR	Some problems of electrorheology of dispersed systems	Mashiny I Tekhnol. Pererab. Kauchukov, Polimerov i Rezinov. Smesei (Yaroslavl), (1), 29-36
1978	Shulman, Z.P.; Korobko, E.V.	Luikov Heat & Mass Transfer Inst, Minsk, USSR	Convective Heat Transfer of Dielectric suspensions in Coaxial Cylindrical Channels	Int J. Heat Mass Transfer **21** (5) 543-548
1978	Deinega, Yu. F., Popko, K.K. Kovganich, N. Ya.	Heat & Mass Tr. Inst. Minsk, USSR	Effect of strong electric fields on rheological properties of hydrocarbon dispersed systemsq	Fix.-Khim. Mekh. Liofilnost Dispersnykh Sist., **10** 85-100

YEAR	AUTHOR	AFFILIATION	TITLE	REFERENCE
1978	Kovganich, N. Ya., Deinega, Yu. F, Popko, K.K.	Heat of Mass Tr. Inst. Minsk, USSR	Electrorheological and dielectric studies of hydrocarbon suspensions of clay materials	Ukr. Khim. Zh. 44 (2) 209-212
1977	Sugimoto, Noboru	Ministry of Labour Tokyo, Japan	Winslow Effect in Ionic Exchange Resin Dispersion	Bull JSME 20 (149) 1476-1483
1977	Kovganich, N. Ya Deinega, Yu. F. Popko, K.K; Petruk, A.S.	Heat & Mass Tr. Inst. Minsk, USSR	Effect of electrical field frequency on the effect of increasing the viscosity of dispersed systems	Ukr. Khim Zh. (Russ. Ed), 43(12), 1237-40
1977	Shul'man, Z.P. Khusid, B.M. Matsepuro, A.D.	Academy of Sci. BSSR Minsk, USSR	Structure Formation of Electrorheological Suspension in an Electric Field II Quantitative Evaluations	Vesti Akademii Naviek. BSSR 3 122-127
1977	Nosov, V.M.	USSR	Effect of particle-size distribution on the rotation rate of a dielectric in electrorheological suspensions	Teor. I Prikl. Mekh., (4), 135-9
1977	Sugimoto, Noboru	Ministry of Labour Tokyo, Japan	Winslow's effect in ionic exchange resin disperse systems	Nippon Kikai Gakkai Rombunshu, 43(367), 1075-85

YEAR	AUTHOR	AFFILIATION	TITLE	REFERENCE
1976	Shulman, Z.P. Korobko, E.V. Matsepuro, A.D.Khusid, B.M.	Acad. of Sci. BSSR Minsk, USSR	Effect of the electrorheological effect on heat transfer in a coaxial cylindrical channel	Teplomassoobmen, Mater, Vses, Konf. Teplomassoobmenu, 5th Volume 7, 238-47. Edited by: Shulman Z.P. Akad. Nauk BSSR, Inst. Minsk, USSR
1976	Efimov, B.F. Shulman, Z.P. Gorodkin, R.G.	Academy of Sci. BSSR Minsk, USSR	Effect of foreign materials on qualitative characteristics of a highly concentrated electrorheological suspension.	Vestsi Akad. Navuk BSSR, Ser. Fiz.-Energ. Navuk, (4) 123-7
1976	Deinega, Yu. F., Popko, K.K. Kovganich, N. Ya.	Heat & Mass Tr. Inst. Minsk, USSR	Study of the effect of temperature on electrorheological effect and dielectric parameters in hydrocarbon suspensions with a hydroxyl-containing finely divided phase.	Teplomassoobmen, Mater, Vses, Konf. Teplomassoobmenu, 5th, Volume 7, 219-27. Edited by: Shulman, Z.P. Akad, Nauk BSSR, Inst.
1975	Kim, A. A.	USSR	Electrorheological properties of ferroelectric suspensions	Reol. Polim, Dispersnykh Sist. Reofiz., Mater. Vses, Simp. Reol., 8th Meeting Date 1974, Vol. 2, 88-95. Edited by; Vinogradov, G.V. Shulman, Z.P. Akad. Nauk B SSR, Minsk
1975	Shulman, Z.P. Matsepuro, A.D., Khusid, B.M.	Academy of Sci. BSSR Minsk, USSR	Study of physical properties of the electrorheological effect using model particles	Reol. Polim. Dispersnykh Sist Reofiz, Mater. Vses. Simp. Reol., 8th Meeting Date 1974 Vol. 2, 48-55. Edited by Vinogradov, G.V. Shulman, Z.P. Akad, Nauk BSSR, Minsk
1975	Sasada, Tadashi, Kishi, Tsutomu, Kenjiro, K.	Japan	Electroviscous effect in liquids with dispersed polymer or solid particles	Nippon Kikai Gakkai Rombunshu, **41**(342), 568-74

YEAR	AUTHOR	AFFILIATION	TITLE	REFERENCE
1975	Deinega, Yu, F., Kovganich, N.Ya	Kiev, USSR	Electrorheological and Polarization phenomena in hydrocarbon dispersed systems	v sb., Plast. Smazki 94-7
1975	Shor, G.I. , Lapin, V.P.; Likhterov, S.D. Shkolnikov, V.M.	All-Union-Sci-REs Inst. for Pet Process, USSR	Electroviscous effects in lubricating oils	Chem Technol Fuels Oils 11 (5-6) 469-473
1975	Deinega, Yu, F., Popko, K.K. Kovganich, N. Ya	Kiev, USSR	Role of Bound water in the electrorheological effect	Dopov. Akad, Nauk Ukr. RSR, Ser. B, (9), 807-10
1974	Shulman, Z.P., Matsepuro, A.D., Novichenok, L.N. Demchuk, S.A. Svirnovskaya, I.L.	Academy of Sci. BSSR Minsk, USSR	Effect of Structure Formation in a Constant Electric Field on the Thermal Conductivity of a Suspension of Aerosil in Cetane.	Inzhevero - FIZ. Zh. 27 (6) 1116-1121
1974	Shulman, Z.P.	Acad. of Sci. BSSR Minsk, USSR	Electrorheological effect	Teplo-Massoperenos, Kokl. Vses. Soveshch., 4th Meeting Date 1972, Vol. 10, Chast 2, 5-30, Edited by: Lykov, A.V. Akad, Nauk B. SSR, Inst. Minsk, USSR.
1974	Shulman, Z.P. Matsepuro, A.D. Smolskii M.B.	Acad. of Sci. BSSR Minsk, USSR	Structural characteristics of the electrorheological effect in nonaqueous dispersed systems	Vestsi Akad. Navuk Belarus. SSR, Ser. Fiz-Energ. Navuk, (1), 60-6

YEAR	AUTHOR	AFFILIATION	TITLE	REFERENCE
1974	Ivanov, U.I.	Tolyatti, USSR	Electrorheological properties of suspensions	Teplo-Massoperenos, Kokl. Vses, Soveshch., 4th Meeting Date 1972, Vol. 10, chast 2, 63-6. Edited by: Lykov, A.V. Akad, Nauk B. SSR, Inst. Minsk, USSR
1974	Shulman, Z.P.	Acad. of Sci. BSSR Minsk, USSR	Electrorheological effect	Teplo-Massoperenos, Dokl, Vses, Soveshch., 4th Meeting Date 1972, Vol. 10, Chast 2, 5-30. Edited by: Lykov, A.V. Akad, Nauk B. SSR. Inst. Minsk, USSR.
1974	Popko, K.K. Deinega, Yu. F. Kavganovich, N.Ya.	Kiev, USSR	Electrorheological effect in hydrocarbon suspensions of poly(vinyl alcohol)	Fiz.-Khim. Mekh. Liofilnost Dispersnykh Sist., 6, 120-3
1974	Deinega, Yu. F., Popko, K.K. Kovganich, N. Ya.	Kiev, USSR	Hydration and electrorheological properties of hydrocarbon suspensions of poly(vinyl alcohol)	Dopov. Akad. Nauk Ukr. RSR, Ser. B, 36(12), 1101-4
1974	Shulman, Z.P. Matsepuro, A.D., Khusid, B.M.	Acad. of Sci. BSSR Minsk, USSR	Charge transfer by oscillating particles in electrorheological suspensions. I. Experimental study	Vestsi Akad. Navuk B. SSR, Ser, Fiz.-Energ. Navuk, (4), 62-9
1974	Shulman, Z.P. Matsepuro, A.D., Kuzmin , V.A.	Academy of Sci. BSSR Minsk, USSR	Formation of dispersed-phase particle bridges in the presence of an electrorheological effect	Vestsi Akad, Navuk Belarus, SSR, Ser. Fiz.-Energy. Navuk, (2) 130-4

YEAR	AUTHOR	AFFILIATION	TITLE	REFERENCE
1974	Shulman, Z.P; Matsepuro, A.D; Smolskii, M.B.	Academy of Sci. BSSR Minsk, USSR	Structural Characteristics of the Electrorheological Effect in Nonaqueous Dispersed Systems.	Vestsi Akad. Navuk Belarus, SSR, Ser. Fiz. Energy Navuk, (1) 60-66.
1974	Sasada, Tadashi, Kishi, Tsutomu, Kamijo, Kenjiro		Electroviscous effect in colloidal liquids	Proc . Jpn. Congr. Mater, Res. 17, 228-31
1973	Hagashi, R; Inuishi, Y.	Osaka Univ. Siuta, Japan	Electrical Properties of Electroviscous Fluids	Oyo Butsuri, 42 (11) 1107-1118.
1973	Petrzhik, G.G. Trapeznikov, A.A. Makarova, E.U. Nickifarov, V.P. Davletshin, R.A.	Inst. F12 Khim Moscow, USSR	Device for Electrorheological Studies	Zh. Fiz. Khim. 47 (10) 2701-2704
1973	Shul'man, Z.P. Matsepuro, A.D.	Acad. of Sci. BSSR Minsk, USSR	Effect of nonisotheemality on the electrorheological and electrophysical properties of suspensions	Vestsi Akad, Navuk Belarus. SSR, Ser. Fiz.-Energy. Navuk, (4), 125-9.
1972	Lulkov, A.V. Shulman, Z.P. Gorodkin, R.G. Matsepuro, A.D. Mitelman, SH.M.	Acad. Of Sci. BSSR Minsk, USSR	The Mechanical Behavior During Shearing of a Disperse System in an Electric Field	Fluid Mech. - Soviet Res 1(1) 4-12

YEAR	AUTHOR	AFFILIATION	TITLE	REFERENCE
1972	Uejima, Hideyuki	Waseda Univ. Tokyo, Japan	Dielectric mechanism and rheological properties of electrofluids	Jap. J. Appl. Phys. 11(3) 319-26
1971	Shulman, Z.P. Deinega, Yu. F., Gorodkin, R.G. Matsepuro, A.D.	Heat & Mass Tr. Inst. Minsk, USSR	Some Aspects of Electrorheology	Progr. Heat Mass Transfer, 4, 109-25
1970	Lykov, a.V. Shulman, Z.P. Gorodkin, R.G. Matsepuro, A.D. Mitelman, SH. M.	Acad. of Sci. BSSR Minsk, USSR	Mechanical behavior during a shift in dispersed systems in an electrical field	Teor. Instrum. Reologiya, Tr. Konf. Fiz.-Khim. Mekh. Dispersnykh Mater., Meeting Date 1969. vol. 1, 58-71. Edited by: Rebinder, P.A. , Akad. BSSR Minsk, USSR.
1970	Krasikov, N.N. Kovylov, A.E.	Lenengrad Inst. USSR	Aspects of electric field action on a suspension containing a nonpolar medium	Zh. Prikl. Khim. (Leningrad), 43(8), 1851-4
1970	Lykov, A.V. Shulman, Z.P. Gordkin, R.G. Matsepuro, A.D.	Acad. of Sci. BSSR Minsk, USSR	Mechanical behavior of electroviscous nonaqueous dispersed systems during shear flow in a transverse electric field.	Inzh.-Fiz. Zh., 18(6), 979-86
1967	Klass, D. L.; Martinek, T.W.	Union Oil	Electroviscous Fluids I Rheological Properties	J. of Applied Physics 38 (1), 67-74

YEAR	AUTHOR	AFFILIATION	TITLE	REFERENCE
1967	Klass, D. L.; Martinek, T.W.	Union Oil	Electroviscous Fluids II Electrical Properties	J. of Applied Physics 38 (1) 75-80
1966	Phillips R.W.	University of California, Berkley	Engineering Applications of Fluids with a Variable Yield Stress	PhD Thesis UC Berkley.
1949	Winslow, W.M.	Wheatridge Colorado	Induced Fibration of Suspensions	J of Applied Physics 20 (12), 1137-1140.

Part 7.2

ELECTRORHEOLOGICAL

PATENTS, FLUIDS AND DEVICES

1947 - 1992

Section 7.2.1
ER Device Patents (1947-1991)

Country	Patent Date	Patent Number	Inventor	Assignee	Title Technology
USA	03/25/47	US 2,417,850	Winslow, W.M.	Welco, Inc.	Method and Means for Translating Electrical Impulses into Mechanical Force
USA	12/08/50	US 2,661,596	Winslow, W. M.	Welco, Inc.	Field Controlled Hydraulic Device.
USA	12/08/53	US 2,661,825	Winslow, W.M.	Welco, Inc.	High Fidelity Slip Control
USA	05/12/59	US 2,886,151	Winslow, W.M.	Welco, Inc.	Field Responsive Fluid Couplings
USA	02/14/67	US 3,304,446	Martinek, T.W.; Klass, D.L.	Union Oil	Electrostrictive Fluid Transducer
USA	05/28/68	US 3,385,793	Klass,D.L.; Mundelein,V.	Union Oil	Electroviscous Fluid and Method of using same - (chucking device)

Country	Patent Date	Patent Number	Inventor	Assignee	Title Technology
USA	05/05/81	US 4,265,348	Clarke, S.E.	General Motors Corp.	Electroviscous fan clutch has overcentre snap action spring valve element for control of fluid gate.
USA	11/24/81	US 4,302,156	LaFlame, F.E.	General Motors Corp.	Electroviscous fan clutch assembly has electromagnet controlling spring arm valve to control viscous clutch operation to assure engine cooling when magnet is not working.
USA	01/12/82	US 4,310,085	LaFlame, F. E.	General Motors Corp.	Electroviscous fan clutch has drain hole within clutch plate controlled by magnetically operated valve mechanism.
USA	03/24/82	GB 2,083,595 (US 4,444,298 (04/24/84))	Stangroom, J.E.	UK Sec. for Defence; National Res Dev Corp.	Viscous shear clutch assembly used electrorheological fluid as transmission fluid with differential arrangement of clutch plates which cancels residual drag.
England	11/02/83	GB 2118741	Stangroom, J.E.	UK Sec for Defence; National Res Dev Corp.	Electrically variable linkage joint for industrial robot or prosthesis utilises properties of electrorheological fluid to provide fast response linkage which can be interfaced with electronic control system.
England	02/08/84	EP 100201 (US 4,782,927 (11/08/88))	Sproston,J.L.;Page,I.M.; Stevens,N.G.	National Res Dev Corp.	Electroviscous fluid actuated device contg. silicone oil uses pulsating DC voltage to control fluid viscosity; used as e.g. clutch or brake.

Country	Patent Date	Patent Number	Inventor	Assignee	Title Technology
England	05/10/84	GB 2129166 (US 4,532,853 (08/08/85))	Stangroom, J.E.	UK Sec. for Defence	Fluid actuator for guided missile steering has output link controlled by two actuators responsive to pressure drop across flow restrictors.
USSR	09/30/84	SU 1116242	Anaskin,I.F.; Gleb,V.K.; Korobko,E.V.	Asaskin, I.F.	System elastic characteristics regulating process using elastic-viscous electrorheological suspension with frequency-regulated tension.
England	01/15/85	US 4,493,615	Stangroom, J.E.	National Res. Dev. Corp.	Electrorheological transducer.
England	02/07/85	AU 8317480	Stangroom, J. E.	UK Secretary for Defence	Electro-rheological Fluid Actuator e.g. for vibrator includes controller connected to electrode assemblies to apply electric field across flow path to vary valve flow resistance; viscosity
Germany	03/07/85	DE 3330205A1	Obstfelder, G.		Self-regulating thrust damper particularly for motor vehicles.
USSR	07/07/85	SU 1165826	Shulman,Z.P.; Ragother,M.M.; Gorodkin,R.G.	Heat Mass Transfer Institute	Machine shafts electrorheological coupling has cells in facing working cylindrical surfaces of half-couplings, filled with electrorheological suspension and covered by membranes.

Country	Patent Date	Patent Number	Inventor	Assignee	Title Technology
USSR	07/07/85	SU 1165568	Godrdanker, S.B.	Godzdanker, S.B.	Band saw catch includes electrorheological liquid filled split case with electrodes inside and conductors outside.
USSR	08/15/85	SU 1173457	Gorenyshev,V.P.; Gorenyshev,A.V.; Kuropatkin,V.S.	Lengd Elektrosila	Electric furnace control relay has membrane placed in vessel and remaining in contact with electrorheological suspension.
USSR	08/15/85	SU 1172662	Berezovik,V.V.; Lukyanovi,A.V.; Lukyanovic,D.V	As Belo Tech Cybernetics	Elastic manipulator sleeve filled with electrorheological suspension has bellow-shaped sleeves with electrodes on opposite inner faces of corrugations.
Germany	03/13/86	DE 3431823	Klein, H.C.	Teves A GbmH	Servo device with pressure indicator for vehicle brakes has double or stepped piston with piezoelectric pressure sensor and electrorheological valve.
England	04/16/86	EP 178078 (US 4,664,236 (05/12/87))	Stangroom, J.E.	ER Fluid Dev Ltd.	Electrically controlled progressive frictional torque transmitter controls degree of frictional engagement by application of variable potential to electrorheological fluid within clutch.
USSR	06/15/86	SU 1237427	Bogorodit,N.N.; Chubarov,K.K.; Pozdnyakov,N.I	Bogoroditskii, N.N.	Industrial robot grab unit has helix in two sections with coils of one located between coils of other.

Country	Patent Date	Patent Number	Inventor	Assignee	Title Technology
USA	08/13/86	GB 2170906	Collins, R.J.W.; Ellis,A.B.E.	General Electric Co. PLC	Acoustic antenna beam steering for scanning purposes modified transmission characteristics of acoustic cell containing electrorheological fluid using electric field.
USSR	11/15/86	SU 1270750	Devisilov, V.A.--	Moscow Bauman Tech Coll	Turbine flow rate regulator has body made with spacer forming cavity with strapping, filled with electrorheological suspension.
USSR	01/15/87	SU 1283086	Makarov,A.N.; Dudarev,S.S.; Kutlubaev,I.M.	Magn Mine Metal Ins.	Robot manipulator module - has spiral flexible electrodes with hollow spiral tubes contg. electrorheological liquid between coils.
USSR	02/23/87	SU 1291771	Rafikov,O.S.; Kudryashov,M.K.; Dayanov,S.B.	UFA Aviation Inst.	Controlled seal unit for thermal machine - has layer of electrorheological liquid between sections of insert so they expand together when heated.
USA	02/25/87	EP 211173 (US 4,742,998 (05/10/88))	Schubert, D.W.	Barry Wright Corp.	Viscous damper for active vibration isolation system has servo-valve using electrorheological fluid to couple load supporting actuator to accumulator.
USSR	03/07/87	SU 1294308	Mirtalipov,R.S.H.	Mirtalipov,R.S.H.	Cotton-picking-appts. drum - having porous external plate surface, impregnated with electrorheological suspension, and bus bar.

Country	Patent Date	Patent Number	Inventor	Assignee	Title Technology
USSR	03/23/87	SU 1298075	Makarov,A.N.; Dudarev,S.S.; Kutlubaev,I.M.	Magn Mining Metal	Pivot for manipulator with many degrees of mobility - has at least one roller on one part and cavity formed by groove in other part with elastic shell round it.
USSR	03/30/87	SU 1300299	Kugaevskii,A.F.; Lukashenot,A.B.	Riga Civil Aviat Enggs	Expanding capsule water depth gauge - using electroviscous sphere lining providing variable stiffness for extended pressure range.
Germany	04/23/87	DE 3536934 (US 4,702,855 (10/27/87))	Goossens, J.; Oppermann,G.; Grape,W.	Bayer AG	Electroviscous fluid suspension contg. aluminium silicate having given aluminium to silicon surface ratio as disperse phase.
USA	05/12/87	US 4,664,100	Rudloff, D.A.C.	Rudloff, D.A.C.	Penile implant using electrorheological fluid hardener has electrodes supplied with power with potential difference making fluid more viscous and so causing erection.
USSR	05/15/87	SU 1310552	Bondarchuk,P.N.; Biryukov,M.P.; Babaev,V.S.	As Belo Mach Reliab.	Wave transmission unit - has system to regulate electrical field inside hollow cam, containing electrorheological liquid.
USSR	06/07/87	SU 1315874	Medzhaushe,A.A.; Potsyus,Z.Y.U.; Rinkyavich,B.B.	Kaun Poly	Flexible shaft - comprises sleeve containing electrorheological fluid with viscosity controlled by external electromagnets.

Country	Patent Date	Patent Number	Inventor	Assignee	Title Technology
Germany	07/01/87	DD 247178	Salomon,R.; Weinholdt,M.	Veb Carl Zeiss Jena	Equipment for moulding plastic lenses - consists of insulating cylinder contg. metal foil moulding membranes which can be shaped as required by applying pressure or vacuum.
USSR	07/30/87	SU 1326302	Lukashenok,A.B.; Nedelskii,K.N.	Riga Civil Aviat Enggs.	Football players training equipment - has ball holding cup made with recesses containing electrodes and fitted with electrorheological liquid.
Germany	08/06/87	DD 248315	Monczkowsk,U,; Germerodt,U.	Techn Univ Dresden	Gripper with pin moving in axial guide for industrial robot - has gripping surface contour adjustable for feeding or mounting so that pin is held in required position.
Germany	09/24/87	DE 3609861 (US 4,898,084 (02/06/90))	Oppermann, G.	Bayer AG	Closed loop control of electroviscous hydraulic system - monitoring motion by current sensor built into supply circuit to control operation.
USA	10/14/87	GB 2,189,086	Tsoiheima, T.	Ford Motor Co. Ltd.	Variable camshaft drive for IC engine - has space in cam filled with electrorheological fluid, controlled electrically to couple or decouple drive.
USSR	10/30/87	SU 1348574	Pilyuto,S.V.; Kravtsov,A.A.	Pilyuto,S.V.	Elastic compensation coupling - has high voltage supply on tie, insulated tube connected to opposite poles of it, and electrorheological fluid between tubes.

Country	Patent Date	Patent Number	Inventor	Assignee	Title Technology
England	11/04/87	GB 2189803	Byatt,D.W.G.	Gec Avionics Ltd.	Electrorheological fluid - contg. insulating particles giving change in apparent viscosity in an electrical field.
Germany	11/05/87	DE 3614484	Weigle, D.	Bosch R GmbH; Weigle, D	Electrohydraulic transducer for hydraulic regulating valve - has insulated tube with concentric bolt, both with conducting surfaces and electrorheologic fluid passing through gap between tube and bolt.
Germany	11/11/87	DD 251430	Ulrich,M; Winkler,L.	Veb Transform Liebknecht	Motion controller for high voltage switch - has electrorheological fluid controlled to vary resistance to motion.
USSR	12/15/87	SU 1359528	Bansyavich,R.U.U.; Karimev,K.A.; Ragulskis,K.M	Kaun Poly	Conversion of rotation into precise linear displacement - employs zonal alteration of viscosity of an electrorheological fluid by generator.
USSR	02/29/88	SU 1377798	Shvachenko,I.I.; Ashurova,L.O.	As Azerb Cosmic Res.	Seismic research detector - has porous element with contact to connect electrode when pressed to shaft wall
Germany	03/24/88	DE 3631107	Bittrich, A; Holscher, R; Rauert, M; Reese, R.	Bilstein A & Co. GmbH	Automobile shock absorber with variable-rate spring characteristic - uses HV electrodes to apply electrostatic field to electrorheological damping fluid

Country	Patent Date	Patent Number	Inventor	Assignee	Title Technology
USSR	04/30/88	SU 1391951	Lysenkov,A.V.; Sayapin,B.I.; Zelenkovsk,L.A.	Lysenkov,A.V.	Mosaic printing head with integral membrane - having sectors of it against channels serving as printing elements, and electrorheological fluid in cavities and channels.
USSR	05/07/88	SU 1393626	Shulman,Z.P.; Gorodkin,R.G.; Ragotner,M.M.	Heat Mass Transfer Institute	Manipulators electrostatic grip - has elastic spacer made of electrical isolating material and two auxiliary electrodes.
USSR	05/07/88	SU 1393590	Chinakhov,A.V.	Chinakhov,A.V.	Lubricant-coolant feeder for metal working machines - has hose made in form of two coaxially arranged pipes
USSR	05/23/88	SU 1397771	Bondarchuk,P.N.; Bondarchuk,L.N.; Birukov,M.	As Belo Mach Reliab	High intensity impact testing stand - has a piston-cavity electrode supplied with current through a delay unit and a cylinder and cavity with quadric surfaces
USSR	06/23/88	SU 1404114	Nastoyashc,V.A.; Tarasenko,A.A.; Nadolni,G.E.	Kirovograd Agric	Mill drum inner surface lining - has hollow rubber element filled with elastic porous insulating material saturated with electrorheological suspension
Japan	07/07/88	DE 3744469 (US 4,858,733 (08/22/89))	Noguchi, T; Kikuchi, T; Takano, K.	Bridgestone Corp.	Controlled hydraulic e.g. for car or rail seat suspension spring - has facing electrode plates either side of flow restriction for electroviscous fluid.

Country	Patent Date	Patent Number	Inventor	Assignee	Title Technology
USA	12/21/88	GB 2,205,920	Collins, R.J.W.	General Electric Co. PLC	Anti-vibration mounting resiliently linking payload to support - has electrorheological fluid and electrodes charged by piezoelectric element which is stressed by movement of payload.
USSR	12/23/88	SU 1445949	Khutski,G.I.; Plyugachev,K.V.; Antonov, M.M.	Belorussian Poly	Gripper using electrorheological fluid - jaws divided into sections by elastic partitions, and equipped with deformable pressure envelopes.
USA	02/07/89	US 4,802,560	Shadra,D.K.; Creedon,R.L.; Harder,C.R.; Bourque,R.F.	General Atomics	Combined wheel-brake appts. using electrorheological fluid - has wheel rotatably mounted on axle with twin arrays of conductive vanes and fluid in vane spaces
USSR	02/07/89	SU 1456808	Mavrichev,Y.U.G.; Bikin,A.V.; Kostrikina,L.I.	Vladimir Poly	Impulse acceleration test rig of articles - has circular container with electro-viscous fluid and solenoid sets fluid to hold table in position
USA	02/07/89	US 4,802,560	Bhadra,D.K.; Creedon,R.L.; Harder,C.R.; Bourque,R.F.	General Atomics	Combined Wheel/Brake apparatus using electrorheological fluid.
USSR	02/15/89	SU 1458600	Surovtsev,A.V.; Lyalko,V.V.	Surovtsev, A.V.	Suppressor for blast waves - contains a stopping filled with a fluid which is solidified under an applied voltage

Country	Patent Date	Patent Number	Inventor	Assignee	Title Technology
USSR	02/15/89	SU 1458144	Lazaryan,A.L.; Fomin,G.B.	Patris Lumumba Univ.	Electrostatic device for fixing items during machining - has moving table fitted with metal plates in dielectric units interacting with suspension for locking items
USSR	02/23/89	SU 1460398	Benin, L.A.	Power Equip Des Tec	Electrorheological hydraulic engine body - has baffles and rotor blades made of electrically insulated segment plates-electrodes
USSR	02/23/89	SU 1460214	Rusin,A.N.; Salov,E.A.	Oil Ind Geophys Ins.	Transducers orienting unit - has float frame with accelerometer, threshold detector and switch connected to high voltage source
USA	03/28/89	US 4,815,674	Blake, T.B.; Kurtti, G.R.	General Motors Corp.	Seat-belt retractor with electrorheological lock - has electrorheological fluid mounted in cavity of retractor housing to lock electrode disc carried by reel shaft
USSR	03/30/89	SU 1469222	Antonova,G.K.; Ivashov,E.N.; Nekrasov,M.I.	Mosc Eltm Equip	Dynamic oscillation damper - has cylindrical fluid-filled housing with ends in form of conducting plates and outer induction coil
USSR	04/30/89	SU1476349	Shulman,Z.P.; Gleb,V.K.; Gorodkin,R.G.	Heat Mass Transfer	Blood properties tester - has stirrer in cup with its outside surface holding electrodes connected to HV source and filled with electrorheological suspension

Country	Patent Date	Patent Number	Inventor	Assignee	Title Technology
Japan	05/10/89	EP 315416 (US 4,926,985 (05/22/90))	Mizuno, K; Lida, K; Murakami, K.	Bridgestone Corp.	Oscillating appts. for damping vibration - has voltage applying device to apply electric voltage to electrorheological fluid passing through inlet and outlet
Japan	06/06/89	JP 1144374		Asahi Chemical Ind KK	Controlling electroviscous fluid of actuator - applies alternating pulsed voltage between electrodes between which fluid is filled
USA	06/20/89	US 4840112	Bhadra,D.K.; Creedon,R.L.; Harder,C.R.	GA Techn Inc.	Combined valve-cylinder using electrorheological fluid - has cylindrical control sleeve and inlet port tube that carries electrorheological fluid
USSR	07/15/89	SU 1493256	Uglova,M.V.; Krivoshche,E.P.; Borskii,O.B.	Kuib Med Inst.	Laboratory animal fastening device - paw grips are in form of insulated electrodes positioned in upper part of plate.
USSR	07/23/89	SU 1494971	Perevozhch,B.G.; Borskii,O.B.; Koshevoii,V.P.	Perevozchikov, B.G.	Drying unit for slow drying and long storage - has insulated electrodes situated in body flange and connected to electric energy source
USSR	08/15/89	SU 1500976	Mishuta,V.N.; Ershov,K.G.; Gavrilovvm	Beldrussian Poly	Speed stabiliser for cine projector - electroviscous liq. between flywheel and casing controls flywheels moment of inertia, protecting sprocket wheel from variations

Country	Patent Date	Patent Number	Inventor	Assignee	Title Technology
USA	08/24/89	DE 3904071 (US 4,896,752 (01/30/90))	Meyer, S.	TRW, Inc.	Electrorheological active suspension leg for vehicle - has microprocessor controlling fluid in-feed and leg fluid viscosity according to vehicle parameters
USSR	08/30/89	SU 1504488	Ilyasov,R.M.; Syzdykov,B.K.; Ismailova,L.N.	Kaza Chem-Techn Ins.	Object displacement position sensor - uses excitation-field source and sensitive electro-contact element in form of electroconducting capsule with elastic wall-membrane
England	09/13/89	GB 2214985	Bignel, P.	UK Sec. for Defence	Fluid flow control valve - has changes in electric field applied to electrorheological fluid operating via brake to control component rotation
Germany	09/14/89	DE 3807056	Schonlau, J.	Teves, A. GmbH	Brake system for vehicle giving anti-brake locking - has sensors for determining rpm of wheels and electronic control circuit connected to sensors using hydrodynamic flow brakes
USSR	09/30/89	SU 1510844	Krivobok,G.K; Elskii,V.N.; Talaenko,A.N.	Don Med Inst.	Laboratory animal decapitation device - has interrupted light flux actuating guillotine, and suspension on slide gripping abdominal hair
USSR	11/15/89	SU 1521958	Kosyakov,V.M.	Kosyakov, V.M.	Belt transmission - uses electrorheological suspension supplied by pipe into contact zone between belt and pulley

Country	Patent Date	Patent Number	Inventor	Assignee	Title Technology
England	11/22/89	GB 2218758	Lynes, A.E.	Self-Changing Gears	Centrifugally operated clutch override control system - includes units, each having piston connected to clutch shoe on which centrifugal force acts against spring restraint
USSR	11/30/89	SU 1525570	Bulakhov,L.M.; Danilevski,L.N.; Korobko,E.V.	Beld Cons Organ Adm.	Ultrasound testing acoustic contact forming - using electrorheological suspension as contact medium, receiving reflected signals of acoustic contact.
USSR	12/07/89	SU 1526991	Godzdanker,S.B.; Godzdanker,E.S.; Pushchansk,I.I.	Vitebskdrev Wood	Bandsaw catcher in event of break - has elastic membranes fixed on body at parting points on either side of bandsaw
USSR	01/07/90	SU 1534506	Ragulskene,V.L.; Shtatsas,A.L.; Lukshite,V.B.	Kaun Poly	Magnetic tape transport mechanism with liquid traction - has drive unit in form of pump with output pipe connected via valves to electrorheological liquid filled chamber.
USA	01/30/90	US 4,896,754 (EP 356145 (02/28/90))	Carlson, D.J.; Dduclos, T.G.	Lord Corp.	ER fluid force transmission and conversion device - use magnetic coupling with variable speed transducer as controlling power source and gripping effect of fluid for torque transmission.
Germany	02/06/90	US 4,898,084	Opperman, G; Feld, F.	Bayer	Sensor-Controlled Hydraulic System with Electroviscous Fluids.

Country	Patent Date	Patent Number	Inventor	Assignee	Title Technology
USA	02/06/90	US 4,898,267	Garrett,W.H.; Janson,D.A.	Eaton Corp.	Electroviscous Fluid Clutch.
USA	02/06/90	US 4,898,266	Garrett,W.H.; Janson,D.A.	Eaton Corp.	Double Element Electroviscous Fluid Clutch.
USA	02/13/90	US 4,900,387	Johnson, J.C.	Boeing Co.	Adhesive contains electrorheological material - which is gelled in electric field to fix the adhesive before and during curing.
USSR	02/15/90	SU 1543173	Girich, V.I.	Girich, V. I.	Quick-release self-sealing pipe connection - pipes have fillet shoulder on ends, made of elastic material.
USSR	02/15/90	SU 1543519	Gorodkin,R.G.; Gleb,V.K.; Kolik,V.L.	Heat Mass Transfer	Electrostatic temporary clamp - has base with HV electrodes covered by electroviscous suspension on which sits workpiece for machining.
USSR	03/15/90	SU 1549778	Koptyuk,E.P.; Komeev,I.A.; Zaguralski,M.T.	Kish Tekhnologiya	Refrigerator cabinets foaming thermal-insulation materials - has side walls that can be raised-lowered and lid moved by plunger spreading material uniformly.

Country	Patent Date	Patent Number	Inventor	Assignee	Title Technology
Germany	03/22/90	DE 3830836	Harzer, P.; Wagner, S.;	Messerschmitt-Bolkow-Bld	Force simulation for aircraft servo-system - involves piston moving in liq. with viscosity varied by electric current.
USSR	03/23/90	SU 1551872	Khizhinski,B.P.; Korobko,E.V.; Koloskov,A.K.	Khizhinskii, B. P.	Active vibro-insulation system - has voltage amplifier controlling HT power supply to electrodes, piston and housing of damper.
USSR	04/23/90	SU 1559237	Krivoschche,E.P.; Bushneva,L.I.; Grigorev,S.G.	Kuib Hospital No1	Joint for glass pipeline - has fixing device in form of insulated electrodes, and electroviscous lubricant.
USA	05/08/90	US 4,923,057	Carlson,J.D.; Coutier,J.P.; Duclos,G.	Lord Corp.	Electrorheological composite structure - magnitude of voltage potential is selected for determining complex moduli of fluid and complex stiffness characteristics of beam.
	05/10/90	RD 313111			Artificial limb control unit - contains electrorheological fluid in piston and cylinder unit associated with joint, controlled by application of electric field.
USSR	05/23/90	SU 1566250	Tsyplyakov,S.P.; Mavrichev,Y.U.G.; Semenyuk,A.N.	Vladimir Poly	Impact test rig braking device - uses electrodes with individual voltage sources to control spatial viscosity of liquid in reservoir.

Country	Patent Date	Patent Number	Inventor	Assignee	Title Technology
USSR	06/07/90	SU 1569909	Aleksandro,A.T.; Sulimova,E.B.	Mosc Eltrn Eng Inst	Vacuum chamber pressure maintaining appts. - has frame cavity divided in two parts by hermetically sealed membrane.
USSR	06/23/90	SU 1573358	Sutormin, V.I.	Mosc Instrumentati	Grinding wheels balancing device - has flexible elements enabling movement of pistons in cylinders at 90 deg. intervals and electrorheological fluid positions pistons.
USSR	07/30/90	SU 1581917	Anisimov,V.I.; Valuev,V.N.; Boltaevski,S.A.	Anisimov,V.I.	Electrically controlled clutch - has high-voltage generator of rectangular pulses of varying duty-factor between voltage supply and disc packs.
Germany	10/04/90	DE 3910364		Schenck, C. AG	Testing specimens or test bodies, esp. for high speed fracture testing - using machine with electroviscous coupling for accurate, reliable load control.
USSR	10/23/90	SU 1601409	Borskii,O.B.; Bruk,M.S.	Kuib Gidroproekt	Wave-powered pump - comprises sphere containing electrorheological suspension interacting with membrane-covered chambers containing electrodes.
USSR	10/30/90	SU 1602742	Plyugachev,K.V.; Mozgovoi,V.E.; Novichikhi,R.V	Beldrussian Poly	Artificial muscle for robot engineering - has mechanical oscillation generators installed on rigid partitions located in and connected to elastic casing.

Country	Patent Date	Patent Number	Inventor	Assignee	Title Technology
Japan	10/31/90	EP 395453 (JP 3113129 (05/14/91))	Kanbara,M.; Hayafune,M.; Tomizawa,H.; Arai,K.	Tonen Corp.	Electrode for electroviscous fluid - has insulating coating giving reduced electrode corrosion and extended fluid life.
Japan	12/05/90	EP 401009	Mitsui,J.	Tonen Corp.	Suspension device for motor vehicle - detects acceleration rate generated in vehicle and controls electric field in accommodate with detected rate of acceleration.
Germany	01/03/91	DE 3920816	Berthold, R.	Asea Brown Boveri A	Highly acceleration resistant packaging e.g. for electronic components - uses electrorheological liquid, e.g. in shell.
Germany	01/17/91	DE 3922930	Rachner, H.	SWF Auto-Electric G	Variable speed servo drive for vehicle accessories - has electroviscous clutch and constant drive electric motor.
USA	01/22/91	US 4,986,689	Drutchas, G. H.	TRW Inc.	Vehicle steering or suspension ball joint - with electrorheological fluid interposed between ball and socket to generate viscosity dependent on applied electric field.
Japan	01/24/91	JP 3016910		Mitsubishi Kasei Corp.	Electroviscous fluids for computer controlled mechanisms - consist of electro-insulating liq(s). dispersing electroconductive fine particles coated by insulating films obtd. by polymerisation.

Country	Patent Date	Patent Number	Inventor	Assignee	Title Technology
USSR	02/07/91	SU 1625504	Lukashenok,A.B.; Nedelskyi,K.N.	Riga Civil Aviat Enggs.	Sports training resistance unit - has cable drum on axle with paddle wheel submerged in electroviscous fluid.
Germany	02/14/91	DE 4023924	Paul, H.	Hottinger Baldwin M	Measurement transducer for mechanical parameters - contains electrically deformable element, electrorheological damping medium in electric field controlled according to temp.
USA	02/19/91	US 4,993,747	Borlinghau, H. J.	General Motors Corp.	Electrorheological belt load anchorage mechanism - has cylinder filled with fluid with piston to transfer occupant resistant load to floor.
Japan	04/16/91	US 5,007,303	Okuzumi, H.	Nissan Motor KK	Variable invertial mass flywheel for vehicle engine - has electrorheological fluid to vary inertial mass by applying voltage to fluid for idling or acceleration conditions.
Germany	04/25/91	DE 4033162	Schulz, M.	Vaillant J. Gmb H & Co.	Locking device for the core in a die casting machine - having electrorheological fluid operating piston motor which can be solidified by applying voltage across two electrodes.
USA	05/14/91	US 5,015,926	Casler, J.A.	Casler, J.A.	Electronically controlled force applicator for exercise machine - controls variable speeds and torque forces in machine using sensor connected to systems output shaft.

Country	Patent Date	Patent Number	Inventor	Assignee	Title Technology
USA	05/14/91	US 5,014,829	Hare, N. S.	Hare, N. S.	Electrorheological shock absorber - comprises cylindrical inner casing holding electrorheological fluid.
Canada	06/13/91	WO 9108003 CA 2004295 (OS 13191)	Hayes, W.F.	Nat Res Council Can(Haye)Hayes,W.F.	Electrohydraulic pump system for artificial hearts - using fluidic device with prim. fluid actuator secondary fluid propellant, supply and return valves.
Japan	06/20/91	JP 3144715		Tonen Corp.	Electroviscous fluid viscosity control for machinery - by frequencies using electrode with insulator layer of polyethylene contacting fluid of porous solid particles in insulating mineral oil.
USA	07/09/91	US 5,029,823 (EP 427413 (05/15/91))	Hodgson,D.A.; Duclos,T.G.	Lord Corp.	Vibration isolator with electrorheological controlled - has variable vol. fluid chambers with movable electrodes and includes electrorheological fluid.
Germany	08/08/91	DE 4003298	Pohl, A.	Schenck C AG	Hydraulic pump or motor - has electroviscous fluid seal that is controlled to generate rapid response.
Germany	08/08/91	DE 4003329	Keutz, M.	VDO A Schindling AG	Electromechanical engine throttle serve-actuator - has constant speed motor transmitting through electroviscous coupling in closed loop mode.

Country	Patent Date	Patent Number	Inventor	Assignee	Title Technology
Germany	09/19/91	DE 4027631	Wichelhaus, D.	Porsche F AG	IC engine camshaft phase alteration - involves bearing ring with fluid whose viscosity is altered by electric voltage.
Germany	09/25/91	EP 448187	Fricke, J.	Fricke, J.	Character and graphic tactile presentation appts. - has deformations of membrane by electroviscous liq. under influence of electrode pairs connected to switch matrix.
England	10/02/91	EP 448874	Prendergas,M.J.; Case,J.R.	Imperial Chem Inds PLC	Electrorheological appts. with fluid of low d.c. conductivity - comprises two electrodes in contact with fluid and means for application of cyclically variable potential between electrodes.
Germany	10/24/91	DE 4012268	Fricke.J	Fricke, J.	Pump for electroviscous fluid - has three or more serial field zones producing travelling field variation in fluid. Use -- Braille reader.
Germany	11/20/91	GB 2244006	Woolnough, V.J.	Blatchford C. A. & SO	Artificial limb joint control - has piston and cylinder assembly with chambers containing electrorheological fluid.

Part 7.2

ELECTRORHEOLOGICAL

PATENTS, FLUIDS AND DEVICES

1947 - 1992

Section 7.2.2
ER Fluid Patents (1962-1991)

Country	Patent Date	Patent Number	Inventor	Assignee	Title Technology
USA	07/31/62	US 3,047,507	Winslow, W.H.	Wefco, Inc.	Field Responsive Force Transmitting Compositions
USA	05/10/66	US 3,250,726	Martinek, T.W.; Klass, D.L.	Union Oil Co.	Preparation of Silica for use in Electric Field - Responsive Compositions.
USA	02/06/68	US 3,367,872	Martinek, T.W.; Klass, D.L.	Union Oil Co.	Electroviscous Fluid Composition - Alumina, silica-alumini in non-polar oleaginous vehicle.
USA	08/13/68	US 3,397,147	Martinek, T.W.	Union Oil Co.	Electroviscous Fluid Composition
USA	08/27/68	US 3,399,145	Martinek, T.W.; Klass, D.L.	Union Oil Co.	Dispersion of finely divided solid in non-Aqueous Liquid.
USA	11/19/68	US 3,412,031	Martinek, T.W.; Klass, D.L.	Union Oil Co.	Electric Field Responsive Compositions - Silica gel, amorphous silica particulates in mineral oil.

Country	Patent Date	Patent Number	Inventor	Assignee	Title Technology
USA	02/11/69	US 3,427,247	Peck, R.L.	Textron Inc.	Electroviscous Compositions non-Aqueous Systems
Japan	02/05/74	JP 49/5117	Itsutsu, Y.; Yoshiwa, M.	Kawasaki Heavy Industries, Ltd.	Electroviscous Fluid
Japan	07/23/75	JP 50/92278	Sugimoto, N.	Industrial Safety Institute, Ministry of Labor	Electroviscous Compositions
England	01/29/76	DE 2530694	Stangroom, J. E.	United Kingdom Sec. of State for Defence	Fluid Composition Responding to Electric Fields
USA	07/20/76	US 3970573	Westhaver, J. W.		Electroviscous Fluids
USA	10/05/76	3,984,339	Takeo,K.; Omura,Y.	FMC Corp.	Hydraulic Oil Composition - use of microcrystalline cellulose.

Country	Patent Date	Patent Number	Inventor	Assignee	Title Technology
USA	05/24/77	US 4025163	Saxe, R.L.; Thompson,R.I.; Fortini,M.	Research Frontiers, Inc.	Light Valve and Light Valve Suspension Materials
England	07/05/77	US 4,033,892	Stangroom, J. E.	U.K. Sec. of State for Defence	Electric Field Responsive Fluids
Japan	02/17/78	JP 53/17585	Matsumura, H.; Yoshiwa, M.; Nagata, O.	Kawasaki Heavy Industries, Ltd.	Electroviscous Fluids
England	08/15/78	JP 53/93186	Stangroom, J. E.	United Kingdom Secretary of State	Electroviscous Liquid Compositions
Japan	08/24/78	JP 53/96980	Sugimoto, N.	Industrial Safety Institute, Ministry of Labor	Electroviscous compositions
England	12/12/78	US 4,129,513	Stangroom,J.E.	U.K. Secretary of State for Defense	Electric Field Responsive Fluids.

Country	Patent Date	Patent Number	Inventor	Assignee	Title Technology
USSR	02/15/80	SU 715596	Petrzhik,G.G.; Chertkova,O.A.; Trapeznikov,A.A.	Inst. of Physical Chem.,Academy of Sciences USSR	Electrorheological Compositions
England	06/25/80	GB 1570234	Stangroom, J. E.	UK Secretary of State for Defence	Improvements in or relating to electric field responsive fluids
England	12/23/82	WO 82/4442; US 4502973	Stangroom, J. E.	National Research Development Corp.	Electroviscous Fluids
England	03/15/83	GB 2119392B	Stangroom,J.E.; Harness,I.	National Res. Dev. Corp.	Improvements in or relating to electric field responsive fluids.
England	09/29/83	DE 3310959; US 4483788 (11/20/84)	Stangroom, J. E.; Harness, I.	National Research Development Corp.	Electroviscous Liquids
England	11/20/84	US 4,483,788	Stangroom, J.E.; Harness, I.	National Research Development Corp.	Electric Field Responsive Fluids

Country	Patent Date	Patent Number	Inventor	Assignee	Title Technology
England	03/05/85	US 4502973	Stangroom, J. E.	UK Secretary for Defence	Electroviscous fluid compsns, comprising hydrophilic solid in halogenated diaryl liq.
England	08/07/85	EP 150994; GB 2153372Al	Stangroom, J. E.; Hamess, I.	National Research Development Corp.	Electro-rheological Fluid Compositions
Germany	02/12/86	EP 170939; (DE 3427499Al (02/13/86)); (US 4645614 (02/24/87))	Goossens,J; Oppermann,G; Grape,W; Haertel,V	Bayer A-G,; Metzeler Kautschuk G.m.b.H.	Electroviscous fluid based on silica gel dispersed in silicone oil contg. amino, hydroxy, acetoxy or alkoxy functional polysiloxane as dispersant.
England	08/06/86	GB 2170510; (US 4687589 (08/18/87))	Block, H,; Kelly, J. P.	National Research Development Corp.	Electrorheological fluid contg. liq. continuous phase hydrogenated arom. liq. (semi-conductor or unsaturated fused polycyclic compound or a poly (acenequinone) polymer) and disperse phase functioning when anhydrous.
Germany	11/20/86	DE 3517281; (US 4,668,417 (05/26/87))	Goossens,J; Oppermann,G; Podszuln,W; Haertel,V	Bayer A.-G.; Metzeler Kautschuk G.m.b.H.	Electroviscous Fluids
Germany	04/23/87	DE 3536934; (US 4,702,855 (10/27/87))	Goossens,J.; Oppermann,G.; Grape,W.	Bayer A.-G.	Electroviscous Fluids

Country	Patent Date	Patent Number	Inventor	Assignee	Title Technology
England	11/04/87	GB 2189803	Byatt, D. W. G.	GEC Avionics Ltd.	Electrorheological Fluids
Japan	02/13/88	JP 63/33459	Fujii, Y.; Nakamura, E.; Sato, H.; Sugano, T.	NOK Corp.	Electrorheological fluid - copolymer of 2-acrylamido-2-methylpropane- sulfonic acid and another acrylic monomer (e.g., acrylamide).
Japan	04/28/88	JP 63097694		Asahi Chemical Ind KK	New electroviscous fluid used for electrical controls - prepd. by dispersing dielectric fine particles contg core organic solid particle, conductive- and outer-film layers, in oil medium.
USA	05/17/88	US 4,744,914 (EP 265252)	Filisko,F.E.; Armstrong,W.F.	University of Michigan	Electric Field Dependent Fluids.
USSR	06/23/88	SU 1404515	Shulman,Z.P.; Gorodkin,R.G.; Ragotner,M.M.; Novikova,Z.A.; Demidenko,T.A.	Heat Mass Transfer Inst.	Method of Producing Diatomite Electrorheological Suspensions
USA	07/06/88	GB 2,199,336	Byatt, D.W.G.	General Electric Co. PLC	Electrorheological fluid - consists of liq. crystal material opt. with suspended microscopic glass bubbles

Country	Patent Date	Patent Number	Inventor	Assignee	Title Technology
Japan	07/28/88	DE 3801535; (GB 2201407 (07/03/91))	Nakazawa,T.; Ogawa,M. A.; Kazuhiko,S; Tokita,T.; Toshio,N.		Spherical amorphous silica or silica alumina particles - used as filler for polymer or cosmetic, having indented surface and specified roundness
USA	09/20/88	US 4,772,407	Carlson, J.D.	Lord Corp.	Water-free electrorheological fluid - has dispersed particulate phase of lithium hydrazinium sulphate and dielectric liq. phase e.g. silicone oil
England	09/28/88	EP 284268; (US 4812,251 (03/14/89))	Stangroom, J. E.	ER Fluid Dev. Ltd.	Electrorheological fluid - comprises hydrophilic solid and low mol.wt. fluoro-silicone fluid
Japan	10/20/88	DE 3811136; (GB 2203735 (07/03/91))	Nakazawa,T.; Ogawa,M.; Abe,K.; Suzuki,K.; Susuk,J.	Mizusawa Chemical Ind. KK	Siliceous prods. derived from analcime - by acid treatment to remove aluminum and sodium
Japan	10/20/88	DE 3811135	Nakazawa,T.; Ogawa,M.; Abe,K.; Suzuki,K.; Suzuki,J.	Mizusawa Industrial Chemicals, Ltd.	Manufacture of active, analcime-type zeolites, amorphous silica, inorganic fillers, and electroviscous fluids.
Japan	12/13/88	JP 63305197		Bridgestone Tire KK	Durable electroviscous liq. - comprises ultrafine powdered ceramic contg. moisture and hydrophillic gps. dispersed in silicone oil.

Country	Patent Date	Patent Number	Inventor	Assignee	Title Technology
Japan	12/13/88	JP 63305196		Bridgestone Tire KK	Durable electroviscous liq. - comprises silicone resin dispersion-suspended in liq. phase of silicone oil; polysiloxane
Japan	01/10/89	JP 1006093	Inoue, Akio	Asahi Chemical Industry Co. Ltd.	Electreviscous Fluids
Japan	03/28/89	JP 1081898	Chikaraishi, T.; Nomura, H.; Tomita, S.; Sato, M.	Bridgestone Corp.	Electroviscous Liquids Containing Dispersed Polymer Coated Microspheres.
USA	04/05/89	GB 2,208,515	Byatt, D. W. G.	General Electric Co.	Electrorheological fluid - which itself acts as active material and pref. is liq. crystal
Japan	04/14/89	JP 1096295		Bridgestone Tire KK	Stable electroviscous liq. for rubber elastic materials - comprises dispersed phased of fine particles suspended in liq. phase of silicone oil
Japan	06/01/89	JP 01139639	Kobayashi, H.; Asako, Y.; Shimomura, T.	Nippon Shokubai Kagaku Kogyo Co. Ltd.	Electroviscous fluid compositions showing the Winslow effect

Country	Patent Date	Patent Number	Inventor	Assignee	Title Technology
Japan	07/07/89	JP 01172496	Inoue, A.; Suzuki, Y.	Asahi Chemical Industry Co. Ltd.	Electroviscous Fluid with Dielectric Microparticle Dispersion
Japan	07/18/89	JP 01180240	Kobayashi, H.; Asako, Y.; Shimomura, T.; Sano, S.	Nippon Shokubai Kagaku Kogyo Co. Ltd.	Electroviscous Fluid Compositions
Japan	07/18/89	JP 1180239	Kobayashi, H.; Asako, Y.; Shimomura, T.; Sano, S.	Nippon Shokubai Kagaku Kogyo Co., Ltd.	Preparation of Electroviscous Fluids by Dispersion Polymerization
Japan	07/18/89	JP 1180238	Kobayashi, H.; Asako, Y.; Shimomura, T.; Sano, S.	Nippon Shokubai Kagaku Kogyo Co., Ltd.	Preparation of Polymer Dispersions that are Viscous in an Electric Field
Japan	08/09/89	JP 01197595	Kato, K.	Tokai Rubber Industries, Ltd.	Electroviscous Fluids
Japan	08/21/89	JP 1207396	Kato, K.	Tokai Rubber Industries, Ltd.	Electroviscous Fluids

Country	Patent Date	Patent Number	Inventor	Assignee	Title Technology
Japan	08/21/89	JP 1207395	Kato, K.	Tokai Rubberr Industries Ltd.	Electroviscous Fluids
Japan	09/21/89	JP 1236291	Nagahori, J.; Akatsuka, T.; Toyama, J.	Nippon Mectron Co.	Electroviscous Fluid
Japan	10/09/89	JP 1253110	Nagahori, J.; Akatsuka, T.; Toyama, J.	Nippon Mectron Co., Ltd.	Electroviscous Fluids
Japan	10/18/89	JP 01260710	Inoue, A.; Suzuki, Y.	Asahi Chemical Industry Co. Ltd.	Method for Operation of Electroviscous Fluids
Japan	10/19/89	JP 1262942	Asako, Y.; Kobayashi, H.; Shimomura, T.; Sano, S.	Nippon Shokubai Kagaku	Electroviscous Compositions
Japan	10/24/89	JP 1266193	Kurauchi, N.; Okada, A.; Hirose, M.; Shiga, T.	Toyota Cent Res & Dev	Electroviscous Fluids

Country	Patent Date	Patent Number	Inventor	Assignee	Title Technology
Japan	10/24/89	JP 1266191	Osaki,T.; Ishino,J.; Endo,S.; Nomura,H.; Chikaraishi,T.; Tomita,S.	Bridgestone Corp.	Stable electroviscous liq. - comprises powder nonionic polymer disperse phase in electrically insulating oil liq. phase
Japan	10/25/89	GB 2217344; (JP 1266195 (10/24/89))	Ishino,Y.; Endo,S.; Osaki,T.; Nomura,H.; Chikaraishi,T.; Tomita,S.	Bridgestone Corp.	Electroviscous Fluid
Japan	11/02/89	DE 3912877	Saito, K.; Kimura, H.	Toshiba Silicone KK	Fine silicone resin powder, esp. for prodn. of antifouling paint - comprises poly-organo-silsesquioxane contg. quat. ammonium gp. - substd. hydrocarbyl gps.
Japan	11/02/89	DE 3912879; (US 5,034,476 (07/23/91))	Saito, K.; Kimura, H.	Toshiba Silicone KK	Fine polyorganosilsesquioxane powder with hydrophilic properties - has surface-treated with block- or graft-copolymer contg. polyoxyalkylene segments and polysiloxane segments
Japan	11/04/89	JP 01275699	Kato,M.; Ishii,M.; Ozawa,M.; Yamada,C.	Aisin Seiki Co. Ltd.	Electroviscous Fluids
USA	11/07/89	US 4,879,056 EP 313351 (04/26/89)	Filisko,F.E.; Armstrong,W.F.	Univ. of Michigan	Changing dynamic torque transmission of electrorheological fluid - by selecting non-conductive liq. phase, dispersing with particulate phase and subjecting to specified electric potential

Country	Patent Date	Patent Number	Inventor	Assignee	Title Technology
Japan	11/08/89	JP 1278598	Nagahori, J.; Akatsuka, T.; Toyama, J.	Nippon Mektron, Ltd.	Electroviscous Fluids
Japan	11/08/89	JP 1278599	Nagahori, J.; Akatsuka, T.; Toyama, J.	Nippon Mektron KK	Manufacture of Electroviscous Fluids
Japan	11/15/89	EP 342041; (JP 2091195 (03/30/90))	Tomizawa, H.; Kanbara, M.; Yoshimura, N.; Mitsui, J.; Hirano, H.	Toa Nenryo Kogya K.K.	Electrorheological Fluid
Japan	11/15/89	EP 341737; (JP 2209997 (08/21/90))	Hattori, E.; Oguri, Y.	Mitsubishi Kasei Corp.	Nonabrasive Electroviscous Fluid
Japan	12/04/89	JP 01299893	Endo, S.; Ishino, Y.; Osaki, T.; Tomita, S.	Bridgestone Corp.	Electroviscous Fluid
Japan	12/07/89	JP 1304189		Bridgestone Tire KK	Stable electroviscous liq. with high response - consists of organosilica gel and opt. modified silicone oil

Country	Patent Date	Patent Number	Inventor	Assignee	Title Technology
Japan	12/07/89	JP 01304144	Hashimoto, T.; Fukuda, T.; Tomita, S.	Bridgestone Corp.	Electroviscous Fluids
Japan	12/07/89	JP 01304188	Hashimoto, T.; Fukuda, T.; Tomita, S.	Bridgestone Corp.	Electroviscous Fluid
Japan	12/07/89	JP 01304187	Hashimoto, T.; Fukuda, T.; Tomita, S.	Bridgestone Corp.	Electroviscous Fluid
England	12/13/89	GB 2,219,598	Gillies, D.; Sutcliffe, L.; Bailey, P.	Castrol Ltd.	Electrorheological Fluids Containing Silicates
USA	01/25/90	WO 9000583	Reitz, R. P.		Induced dipole electroviscous fluids with long shelf life
Japan	01/29/90	JP 02026634	Ogawa, Y.; Takeuchi, K.	Toyoda Gosei Co., Ltd.	Electroviscous fluids with high heat resistance

Country	Patent Date	Patent Number	Inventor	Assignee	Title Technology
Japan	01/29/90	JP 2026633	Ogawa, K.; Takeuchi, K.	Toyoda Gosei KK	Electroviscous Fluids with High Stability
Japan	02/06/90	JP 2035933		Nippon Shokubai Kagaku	Electroviscous fluid compsn. for brakes, clutches, etc. - comprises dispersion of crosslinked polymer particles, having cationic and anionic dissociating groups in insulating medium
Japan	04/04/90	EP 361931; (JP 2091194 (03/30/90))	Kanbara, M.; Tomizawa, H.	Tonen Corp; Toa Nenryo Kogyo KK	Non Aqueous Electrorheological Fluid
USA	04/19/90	EP 394049A1	Carlson, J.D.; Bares,J.E.; Yanyo,L.C.; Farley,S.R.H.; Acker,D.N.	Lord Corp.	Electrorheological fluids and preparations of particles useful therein. Nickel, AL, silver, microspheres with silicate layer.
Japan	05/07/90	406853A1	Torii,T.; Hatano,H; Ishino,Y.; Maruyama,T.; Saito,T.	Kawasaki Steel/Bridgestone Corp.	A carbonaceous powder for electrorheological fluid and a method of making the same.
Japan	05/31/90	JP 2142898	Minemura, M.; Kuwata, S.; Mori, S.	Shin-Etsu Chemical Industry Co. Ltd.	Electroviscous Fluid Compositions

Country	Patent Date	Patent Number	Inventor	Assignee	Title Technology
Japan	06/27/90	EP 374525; (JP 2164438 (06/25/90))	Fukuyama, Y; Ishino, Y; Osaki, T; Maruyama, T; Saito, T	Bridgestone Corp.	Electroviscous Fluids
Japan	06/29/90	JP 02169695	Inoue, A.; Sato, T.	Asahi Chemical Industry Co. Ltd.	Electroviscous Fluid
Japan	08/03/90	JP 02196892	Nakanaga, T.; Tada, Y.	Otsuka Chemical Co. Ltd.	Electrorheological fluids
Japan	08/10/90	JP 02202594	Nakanaga, T.; Yasuki, M.	Otsuka Chemical Co. Ltd.	Electrorheological fluid compositions
Japan	08/16/90	JP 02206692	Amano, S.; Sasaki, Y.	NOK Corp.	Particles for electrorheological fluids
Japan	09/18/90	JP 2235994		Asahi Chemical Ind KK	Electroviscous fluid with high-temp stability - comprises hydrated dielectric fine particles having electrically insulating thin film layer dispersed in insulating fluid

Country	Patent Date	Patent Number	Inventor	Assignee	Title Technology
Japan	09/19/90	EP 387857; (JP 2240197 (09/25/90))	Shima,K.; Hattori,E.; Oguri,Y.	Mitsubishi Kasei Corp.	Electroviscous Fluid
Japan	10/16/90	JP 02255798	Murakami, K.; Sugiura, T.; Kato, K.	Tokai Rubber Industries, Ltd.	Electroviscous Fluid
England	10/24/90	EP 394005; (GB 2230532 (10/24/90))	Block, H.; Chapples, J.; Watson, T.	National Research Development Corp.	Electrorheological Fluid. Polyaniline.
England	10/24/90	EP 393830	Prendergast, M. J.	Imperial Chemical Industries PLC	Electrorheological Fluids
England	10/24/90	EP393831	Prendergast, M. J.	Imperial Chemical Industries PLC	Electrorheological Fluids
USA	10/24/90	EP 394049	Troughton,B.E.; Duclos,T.G.; Thuer,A.M.; Carlson,J.D.; Bares,J.E.; Yanyo,L.C; Farley,S.R.H.; Acker,D.M.	Lord Corp.	Electrorheological Fluids and Preparation of Particles Useful in the Fluids

Country	Patent Date	Patent Number	Inventor	Assignee	Title Technology
USA	10/24/90	EP 393692; (US 4,990,279 (02/05/91))	Ahmed, S. M.	Hercules Inc.	Electrorheological Fluid
USA	10/24/90	EP 393693	Ahmed, S. M.	Hercules Inc.	Electrorheological fluids
Japan	10/30/90	JP 2265997		Toyota Jidosha KK	Electroviscous fluid prepn. - by burning silicon powder in an oxidising atmos. to one silicon dioxide and then dispersing in silicone oil
Japan	10/31/90	EP 395359; (JP 2284992 (11/22/90))	Tomizawa, H.; Kanbara, M.; Hayafune, M.	Tonen Corp.	Electroviscous Electrically Insulating Fluids
England	11/07/90	EP 396237	Prendergast, M. J.	Imperial Chemical Industries PLC	Electrorheological Fluids
Japan	01/09/91	EP 406853	Fukuda,N; Nagayama,K; Torii, T; Hatano,H; Ishino,Y; Maruyama,T; Saito,T.	Kawasaki Steel Corp.	A carbonaceous powder for electrorheological fluids and its manufacture

Country	Patent Date	Patent Number	Inventor	Assignee	Title Technology
Japan	01/24/91	JP 3016910	Shima, K; Hatsutori, E; Oguri, Y.	Mitsubishi Kasei Corp.	Electroviscous fluids
USA	02/12/91	US 4,992,192	Ahmed, S. M.	Hercules Inc.	Electrorheological fluids
Japan	02/15/91	JP 3035095	Yoshimura, R; Akatsuka, T; Nagahori, J; Maita, N.	Nippon Mektron Co. Ltd.	Electroviscous fluids
Japan	03/22/91	JP 3066799	Nagahori, J; Akatsuka, T.	Nippon Mektron Co., Ltd.	Electroviscous fluid manufacturing method
Japan	04/09/91	JP 3084093	Akatsuka, T; Nagahori, J.	Nippon Mektron Co. Ltd.	Electroviscous fluids
Japan	04/09/91	JP 3084095	Akatsuka, T; Nagahori, J; Toyama, J.	Nippon Mektron Co. ltd.	Electroviscous fluids

Country	Patent Date	Patent Number	Inventor	Assignee	Title Technology
USA	04/15/91	JP 3088904; (EP 393693 (10/24/90))	Ahmed, S.M.	Hercules Inc.	Prepn. of electrorheological fluid - by forming polymer in situ as particles in presence of stabiliser with affinity for particles surfaces then adding polar liq.
Japan	04/17/91	GB 2236761; (JP 3124794 (05/28/91))	Kukrachi, Y.; Osaki, T.; Tanakak, M.; Ishino, Y.; Saito, T.	Bridgestone Corp.	Non-aq. electro-rheological fluid, comprising an oily medium - contg. particles and cpd. having functional gp. contg. O, N, S or P atoms, is stable when used in contact with rubber or resins.
Japan	04/18/91	JP 3093898	Shima, K; Hatsutori, E; Oguri, Y.	Mitsubishi Kasei Corp	Electroviscous fluids
Japan	05/21/91	JP 3119098	Kurihara, M; Inoue, A.	Asahi Chemical Ind KK	Electroviscous fluids
Japan	06/11/91	JP 3137196	Suzuki, Y; Nakamura, M; Inoe, A.	Asahi Chemical Ind KK	Preparation of electroviscous fluids
Japan	06/13/91	JP 3839598	Ishino,Y.; Iino,T.; Maruyama,T.; Osaki,T.; Kawagoe,T.; Saito,T.	Bridgestone Corp.	Preparation of electroviscous fluids

Country	Patent Date	Patent Number	Inventor	Assignee	Title Technology
Germany	06/19/91	EP 432601; (DE 3941232 (06/20/91))	Herrmann, U; Penners, G; Oppermann, G; Findt, R; Steinbach, H.H.	Bayer AG	Electroviscous fluids based on dispersed polyethers
Japan	06/20/91	JP 3144715	Arai, K; Kanbara, M; Tomizawa, H.	Tonen Corp.	Electroviscous fluid viscosity control for machinery - by frequencies using electrode with insulator layer of polyethylene contacting fluid of porous solid particles in insulating mineral oil
Japan	07/10/91	JP 3160094	Inoue, A; Kurihara, M.	Asahi Chemical Industry Co. Ltd.	Dispersible electroviscous fluids
Japan	07/12/91	JP 03162494	Murakami, K; Nagai, K.	Ricoh Co. Ltd.	Fluids responsive to electric field
USA	07/16/91	US 5,032,307	Carlson, J. D.	Lord Corp.	Surfactant-based electrorheological materials
Japan	07/18/91	JP 3166295	Inoue, A; Sato, T.	Asahi Chemical Industry Co. Ltd.	Electroviscous fluid with improved dispersibility

Country	Patent Date	Patent Number	Inventor	Assignee	Title Technology
Japan	07/24/91	JP 3170600	Kanbara, M.; Hayafune, M.; Tomizawa, H.	Tonen Corp.	Preparation of electroviscous fluids
Japan	08/05/91	JP 3179095; (EP 457595 (11/21/91))	Minemura, M.; Kuwata, S.	Shinetsu Chemical Ind KK	Electroviscous fluid contg. silicone oil, synthetic fluorinated oil - and addition polymer or copolymer of (meth)acrylic acid (esters or metal salt) dispersoil
Japan	08/05/91	JP 03179095	Murakami, K; Nagai, K.	Ricoh Co. Ltd.	Electroviscous fluids for clutch or shock absorbers
Japan	09/02/91	JP 3200897	Sugimoto, A; Oomura, T; Inoe, H.	Toa Gosei Chemical Industry Co. Ltd.	Electroviscosity fluids
Japan	09/11/91	EP 445594	Endo, S.; Ishino, Y.; Maruyama, T.; Saito, T.	Bridgestone Corp.	Electrorheological fluid used carbonaceous dielectric particles - pref. polymer coated in an insulating oil of dielectric constant not less than 3 to give a non-aqueous, thermally stable fluid.
Japan	09/20/91	JP 3215597	Asako, Y; Ono, S.	Nippon Shokubai Kagaku Kogyo Co. Ltd.	Electroviscous fluid compositions

Country	Patent Date	Patent Number	Inventor	Assignee	Title Technology
	10/10/91	RD 321089		Smith, G.W.	Electrorheological fluids - with improved electroviscosity efficiency comprising size-polydisperse particles
USA	10/29/91	US 5,061,388	Nader, B.S.	Dow Chemical Co.	New aryl subsid. 1,2-cyanobenzene cpds. and mono or polyaza derivs. useful for increasing lubricity of lubricant compsns.
USA	10/30/91	EP 453614	Ahmed, S. M.	Hercules Inc.	Prodn. of electrorheological fluids - by grafting hydrophilic monomer onto hydrophobic polymer particles in non-conductive vehicle
Japan	11/06/91	EP 455362	Kurachi,Y.; Saito,T.; Fukuyama,Y.K.; Endo,S.	Bridgestone Corp.	Functional powder and electrorheological fluid - having improved oxidn. resistance and controlled electrical properties obtd. by dispersing minute particles in matrix phase.

Part 7.2

ELECTRORHEOLOGICAL

PATENTS, FLUIDS AND DEVICES

1947 - 1992

Section 7.2.3
Energy-Related ER Patents

(Section 7.2.3.1 Devices)

Country	Patent Date	Patent Number	Inventor	Assignee	Title Technology
USSR	10/07/85	SU 1183235	Bogorodits,N.N.; Chubarov,K.K.; Pozdnaykov,N.I.	N-W Correspondence Poly	Sheet metal hardware component forming machine has easily deformed electrode mesh grids with corrugations located in corrugated filler layers to reduce power requirements.
Germany	05/28/86	DE 3443183	Holzinger,D; Domann, H.	Bosch R GmbH	Controlling damping strength of vehicle suspension using piston in cylinder filled with fluid whose viscosity is altered by electrostatic field.
USSR	10/07/87	SU 1343079	Khisaev,I.A.; Zakiullin,R.S.H.; Rafikov,O.S.	UFA Aviation Inst.	IC engine fuel injector - has electrically-conducting bush round pintle enclosing electrorheological fluid for improved injection control.
USA	10/20/87	US 4,700,678	Elliot, G.D.	Elliott, G.D.	Compression fuel injector for IC engine - utilises electrorheological fluid to control amount of fuel to be delivered to engine combustion chamber.
USSR	12/30/87	SU 1363323	Shulman,Z.P.; Gurodkin,R.G.; Ragoner,M.M.	Heat Mass Transfer Institute	Electric circuit switching electrostatic relay - has cavity in base filled with electrorheological suspension, membrane on side of cavity and conducting layer on membrane facing cavity.
USSR	01/07/89	SU 1449683	Rafikov,O.S.; Gilmutdino,V.K.H.; Nafikov,A.A.	UFA Aviation Inst.	IC engine RPM regulator - uses electric means to pass the position of the centrifugal weights to the control circuit

Country	Patent Date	Patent Number	Inventor	Assignee	Title Technology
Germany	05/24/89	EP 317186 US 4,920,929	Bishop, E.T.	Jaguar Cars Ltd.	Independently driven cooling fan esp. for combustion engine - utilises variable of fluid filling gap between outer and inner fan components subject to electric field
USA	06/05/90	US 4,930,463	Hare, N.S.	Hare, N. S.	Electrorheological valve control mechanism - has electrode coupled to perforated member for generating field to solidify electrorheological fluid. Valve controller for petrol or diesel IC engine.
USA	05/28/91	US 5,019,119	Hare, N. S.	Hare, N. S.	Electrorheological fuel injector - comprises cylindrical casing with compression chamber for holding metered quantity of fuel.

Part 7.2

ELECTRORHEOLOGICAL

PATENTS, FLUIDS AND DEVICES

1947 - 1992

Section 7.2.3
Energy-Related ER Patents

(Section 7.2.3.2 Fluids)

Country	Patent Date	Patent Number	Inventor	Assignee	Title Technology
USA	04/19/89	EP 311984	Brooks, D A; Kandian, S	American Cyanamid Co.	Improvement in or relating to electrorheological fluids
Japan	11/02/89	DE 3912878; (US 4996257 (02/26/91))	Saito, K.; Kimura, H.	Toshiba Silicone KK	Fine poly-organo-silsesquioxane powder, useful for underwater paint - has surface coating of organo-silicon cpds. contg. quat. ammonium gps.
Japan	12/04/89	JP 01299894	Ishino, Y.; Osaki, T.; Endo, S.; Tomita, S.	Bridgestone Corp.	Electroviscous Fluid
Japan	02/05/90	JP 02034691	Osaki,T.; Ishino,J.; Endo,S.; Tomita,S.	Bridgestone Tire KK	Electroviscous Fluid
Japan	04/04/90	EP 361106	Ishino,Y; Osaki,T; Endo,S; Tomita,S; Maruyama,T; Fukuyama,Y; Saito, T.	Bridgestone Corp.	Electroviscous fluid with anhydrous carbon particulates - dispersed in insulating oil usable over wide temp. range with low power consumption and with AC or DC
Japan	04/04/90	EP 361106; (JP 3047896 (02/28/91))	Osaki, T.; Ishino, J.; Endo,S.; Tomita,S.; Maruyma,T.; Fukuyama,Y; Saito,T.	Bridgestone Corp.	Electroviscous Fluid

Country	Patent Date	Patent Number	Inventor	Assignee	Title Technology
Japan	06/13/90	EP 372366; (JP 2150494 (06/08/90))	Fukuyama, Y.;Ishino, Y.; Osaki, T.; Maruyama, T.; Saito, T.	Bridgestone Corp.	Electroviscous Fluid - composed of crystalline zeolite.
Japan	10/22/90	424840A1	Kurochi,Y; Tanaka,M; Ishino,Y; Saito,T.	Bridgestone Corp.	An electrorheological fluid. Particulates having specific gravity >1.2 and <4wt% water in an insulating medium having P=N bonds in the molecule. Smaller electric power consumption.
Japan	02/13/91	JP 3033194	Shiga,T.; Hirose,M.; Okada,A.; Kurauchi,N.	Toyota Central R & D Labs. Inc.	Electroviscous fluids
USA	02/19/91	US 4,994,198	Chung, K.	Dow Corning Corp.	Electrorheological fluids based on silicone ionomer particles
Japan	03/29/91	JP 3074494		Asahi Chemical Ind. KK	Electroviscous fluid maintaining stable sheet stress - comprises dielectric fine particles dispersed in oil medium having high insulating properties
USA	05/15/91	EP 427520; (US 5,032,308 (07/16/91))	Kobel, T.M.; Cipriano, R.A.	Dow Chemical Co.	Heat stable electrorheological fluid - contg. dielectric carrier fluid with e.g. dispersed non-conductive fine particles carrying dielectric aprotic coating

Country	Patent Date	Patent Number	Inventor	Assignee	Title Technology
Japan	06/13/91	JP 3139599; (EP 424840 (05/02/91))	Kurachi,Y.; Tanaka, M.; Ishino,Y.; Saito,T.	Bridgestone Corp.	An electrorheological fluid
Japan	08/07/91	JP 3181597		Bridgestone Corp	Fluid having high electroviscous effect with low power consumption - consists of dispersed phase intercalation cpd. and organic substance contg. electrically insulating oil(s).
Japan	08/22/91	JP 3192195	Asako, Y; Okada, I; Aoki, M; Kobayashi, M.	Nippon Shokubai Co. Ltd.	Electroviscous fluid composition

APPENDICES

A. STATEMENT OF WORK

B. VISITS AND CONTACTS

C. NOMENCLATURE

APPENDIX A

Contract No. DE-AC02-91ER30172

STATEMENT OF WORK

1.0 Purpose

The purpose of the Statement of Work is to describe the performance required for an independent assessment of the research needs for the application of Electrorhrological (ER) Fluids to devices, equipment, and systems for improved efficiency of energy use, for improved fuel economies of transportation systems, and for the use of alternative fuels in current transportation systems. The direction, content, and priority of research activities for the long term (5 to 20 years) should be addressed.

2.0 Objectives

The Contractor shall:

a. Identify and describe, on a worldwide basis, the most promising new and novel developments, applications, and opportunities in electrorheological fluids which have the potential for improved efficiency of energy use, improved fuel economies, and the use of alternative fuels. Market sectors should include, but not be limited to, industrial automation equipment, the general and special industrial machinery industry, the fluid power industry, and the transportation industry (including both ground transportation and aerospace sectors). In addition, the application of ER fluids to automated equipment and other devices for use in nuclear power and radioactive waste management environments shall be specifically addressed.

   Justification shall be provided for why each identified development, application and opportunity is judged to be promising, both technically and for obtaining the energy related improvements and benefits sought.

b. Assess the technology base required for success of the items identified in Section a. directly above. Necessary developments in interfacing electronic equipment for power and control of ER fluids in the promising applications identified shall be included in the assessment.

Identify the major deficiencies, limits, unknowns and problems (including environmental problems) and the most promising research directions and opportunities to address them. The degree of risk for successfully accomplishing the identified research should be estimated.

c. Recommend priorities for all the research needs identified during the assessment. Provide ample justification for recommended priorities. A proven methodology shall be utilized to identify priorities. No methodology development is to be performed under this contract.

d. Document all activities, findings, conclusions and recommendations in an objective, clear, and technically accurate report suitable for public distribution. All research recommendations and their priorities shall have clear and adequate justification.

e. Obtain a balanced, wider peer review of the final draft report; amend the final draft, as necessary, to incorporate relevant peer review comments, and rebuttals, and publish it as the final report.

f. Provide oral presentations, with backup slides and hard copy, summarizing the final report to DOE and other designated DOE officials, managers, and invitees.

3.0 Work Activities

The Contractor shall supply the personnel, facilities, and materials necessary to accomplish the objectives of Section 2.0 above. It is anticipated that necessary assessment activities could include, but not be limited to, the following:

a. Assembly and use of prominent experts in ER fluids research and technology to identify, evaluate and document the direction, content and priority of research activities in the areas of the Statement of Work for the next 5 to 20 years.

b. Technical discussions with other experts, specialists, researchers, and research program managers in the scientific and technical areas directly related to ER fluids and its applications.

c. Site visits to laboratories, universities, and other facilities where research and development directly related to ER fluids and their applications is conducted and managed.

d. Review and evaluation of recent and relevant research including scientific and technical literature.

e. Other means, as deemed appropriate, including the usage of additional consultants.

4.0 Ex-Officio Participants

Additional observers and experts from the Government will be identified by DOE who may attend meetings of the Contractor and its experts under this contract.

SITE VISIT REPORT B.1

TELECONFERENCE WITH DR. HANS CONRAD

Contact: Dr. Hans Conrad
Materials Science and Engineering Dept.
North Carolina State University
Raleigh, NC 27695-7907
Phone: 919/515-7443
FAX: 919/515-7724

Date: April 8, 1992 at 1:45 pm; (duration 40 minutes)

Conferees: Drs. Conrad, Irvin Krieger (216/321-3316), Edward Collins (216/933-6308)

ATT Reference: CD 67330

Dr. Hans Conrad is one of the leading U.S. researchers in ER fluids. The purpose of this teleconference was to secure his advice and opinions on research needs in ER science and technology. Dr. Collins had spoken earlier with Dr. Conrad, described this study, its sponsorship and its goals, and secured Dr. Conrad's agreement to participate. The conference was conducted mainly in question-and-answer format. Some of the question were posed by Dr. Krieger, others by Dr. Collins; the answers are all by Dr. Conrad. The gist of the conference is reported below (although not verbatim).

Q. How long have you been doing research on ER fluids?

A. About five years.

Q. Describe your research group.

A. I have had 3 postdoctoral researchers and 4 graduate students. Two have completed requirements for the Ph.D., one for the M.S., and there is one Ph.D. in progress. Dr. Sprecher is a Ph.D. graduate who has remained with the group as a postdoctoral researcher. The group now numbers four.

Q. Where do you receive your research support?

A. From industrial sponsors and the NSF. There was also a grant from the Army Research Office (Durham).

Q. Where is your current research directed?

A. Mainly toward obtaining a basic understanding of the mechanisms of the ER effect.

Q. What have you published or patented in this field?

A. Two or three review papers plus numerous research publications, no patents. (Note: Dr. Collins has copies of the review papers.)

Q. What do you consider to be the most promising applications for ER fluids?

A. As smart materials (where a sensor detects a condition and sends a control signal to an ER-based responder) and in automotive damping, clutching and braking devices.

Q. Which applications of ER fluids can have favorable impact on production, consumption or conservation of energy resources?

A. I haven't looked into this.

Q. What about energy savings by reducing automotive oscillations through ER shock absorbers?

A. Intuitively, I think this will be important, but don't know how to estimate the savings quantitatively. Bob Novak or Dale Hartsock at Ford might be able to provide this.

Q. How do you characterize ER fluids as to stability, rheology, resistance to degradation, *etc.*?

A. We measure mechanical and electrical properties. Mechanical shear resistance is measured in a concentric-cylinder viscometer. Electrical measurements include voltage, current and dielectric constant. We measure the forces between particles and observe particle alignment under static, quasi-static and dynamic conditions. We also make measurements on beams containing ER fluids. We do no stability measurements.

Q. Are the beam-stiffening studies directed towards airfoils or hydrofoils? Do you work with hydro- or aerodynamicists on this?

A. Yes, this is what we have in mind. I have discussed this with people in our mechanics and aerodynamics departments. There seems also to be an application to helicopter blades.

Q. Where do you get the fluids that you study?

A. We prepare our own fluids, and have also studied samples provided by Lord Corporation and others. The model fluids which we prepare are mainly silicas and zeolites in silicone or mineral oils, but we also have used cornstarch in corn oil. The fluids best for commercialization are silicas and zeolites in silicone oils. Silicone oils are preferable to mineral oils because they are usable over a broader temperature range.

Q. What do you regard as the principal problems and obstacles in developing ER technology?

A. Understanding what makes for ER fluids, *i.e.*, how ER fluids actually operate to produce an ER effect. We need more basic studies; otherwise, you are doing Edisonian research.

Q. Does the current drawn by ER devices pose a real problem?

A. Yes, especially at high temperatures, even at temperatures above 50C.

Q. Where is fundamental research needed in order to provide a better scientific basis for ER technology?

A. This is a question that I don't want to answer fully, since I am preparing research proposals in this area.

Q. What would you like other researchers to study?

A. I'd like them to provide good fluids, usable from -50 to 150C. Also, we need to understand more about surface behavior and polarization.

Q. Who are the leaders in academic and industrial research on ER fluids?

A. Academic researchers in the U.S.: Charles Zukoski, Frank Filisko, Alice Gast, Montgomery Shaw, Andrew Kraynik, John Brady. In Europe: Harry Block, William Bullough, Z. Shulman, Eugenia Korobko. Industrial research: Lord, GM, Ford, Lubrizol; in Europe: Bayer (Germany), the Brooks Group (UK).

Q: What about Japan?

A. Leading academic researchers are Aoyama and Tanaka at Yamagata University and Otsubo at Chiba University. An industrial leader is Asahi Chemical. There is also work going on in Korea. They have asked to host the Third International Conference on Electrorheology.

Q. We weren't aware of work in Korea. Can you identify some of the people involved?

A. Dr. Korobko tells me she is in touch with Lee Jung, who is a key player in Korea. Two of my postdoctoral students and one of my own Ph.D.'s have started their own research groups in Korea. They are:

Dr. Y. Choi - Korean Military Institute (their West Point)
Dr. E. Jung - at a new university started by Rev. Moon
Dr. Kim - at one of the Korean national laboratories.

Q. What would it really take to make ER actually fly?

A. Ford tells me that, if some one would provide a stable ER fluid with a 20 kilopascal force from -50 to 150 C, they would use it throughout their automotive products. This would involve billions of dollars in ER applications.

Drs. Collins and Krieger thanked Dr. Conrad for his cooperation, and asked whether he would be willing to look over a draft report on the teleconference and note any additions, deletions and corrections. Dr. Conrad agreed[1].

---

[1] This site visit report has been approved by Dr. Conrad.

SITE VISIT REPORT B.2

RheoActive, INC.

February 6, 1992

The site visit to RheoActive, Inc. was arranged by Co-Principal Investigator Dr. Edward A. Collins, who serves as a consultant to RheoActive's parent company, Lubrizol, Inc. It took place on February 6, 1992 at RheoActive's headquarters in Wickliffe, Ohio. Present for Consultec were Irvin Krieger and Edward Collins; RheoActive was represented by its President, Dr. Frederick P. Boyle.

This report will be organized as a series of questions and answers, although the actual interview was informal and less structured.

How long has RheoActive been involved with electrorheology?

RheoActive was formed in 1987 by Lubrizol, Inc. as a wholly owned subsidiary. Prior to 1987, Lubrizol conducted some research and development on ER fluids, an activity consistent with its strengths in chemistry and its presence in automotive markets. Also in the greater Cleveland area was the Clevite Corporation, a huge but failing corporation with strong activity in electrorheological devices for automotive and other markets. Clevite was bought out in 1987 by Pullman, who sold the electrorheological activity to Lubrizol. Dr. Boyle moved from Clevite to the newly formed RheoActive, Inc. to head this activity. .

Where are RheoActive's current efforts directed?

At present, Lubrizol continues its strong activity in ER fluids, while RheoActive concentrates on the electromechanical aspects of ER systems. They produce their own devices and controls, but obtain power supplies and sensors from outside sources. They focus on the automotive market - suspensions, vibration control, power transmission, clutches, *etc.*

What do you consider to be the most promising applications for ER technology?

Dr. Boyle considers ER systems to be potentially the most efficient of all electromechanical interfaces, with the possibility to replace solenoids, valves, piezoelectric activators, and other current interface technologies. The initial application will be in vibration damping, but other automotive applications will soon follow.

Which applications of ER technology will favorably affect energy consumption?

Dr. Boyle has made a "back-of-an-envelope" estimate of the energy wasted in automotive shock absorbers. For a passenger vehicle on a smooth road, his figure is 1/4 horsepower, out of the 10 to 15 total horsepower needed for propulsion. For heavier vehicles and/or rough roads, the figure is of course higher. He suggests that we contact the major automotive manufacturers, particularly the Delco division of GM, to obtain a more accurate and substantiated figure. ER suspensions have the capability of being active instead of merely reactive, making possible an optimal combination of "ride" and "handling". Dr. Boyle believes that ER technology will produce additional automotive energy savings by permitting fans, alternators and other components to be activated only when needed. Less energy is consumed by ER devices than by magnetic or motor-activated counterparts, and the absence of moving parts reduces wear and the need for replacement.

What do you regard as the principal problems in developing ER technology?

The main problems lie in the fluids and in the controls. For the fluids, we need (1) high yield stresses, (2) low zero-field viscosity, (3) low power density, and (4) fast response. The practical goal for response time is 1 millisecond, which should permit responses up to 20 Hz. However, many specific applications do not require so fast a response. DC fields are to be preferred, since the efficiencies of AC fields are limited by the ratio of response time to period of alternation of the field.
RheoActive has operated DC-activated ER devices over long times and heavy cycling without any indication of electrolytic degradation. There is a problem with fluid conductivity. ER fluids are semiconductors, with conductivity increasing with temperature. There seems to be some correlation between conductivity and response time, with the faster-responding fluids showing higher conductivity. This tends toward excessive power density.

Where would RheoActive like to see fundamental research carried out in order to provide a better scientific basis for ER technology?

We need to understand the ER effect. Specifically, we need:

1. A model which explains the magnitude of the yield stress. Dr. Boyle believes that the ER effect should be studied as a field- induced phase transition.

2. The mechanism of conductivity - the role of charge transfer, how current is passed along a filament of particles, the electronic properties of ER fluids.

3. The effect of particle size, particle size distribution, aspect ratio, packing of nonspherical particles.

4. More experiments to put theories to the test.

Dr. Boyle showed us through RheoActive's laboratory and workshop. They measure rheological properties in two ways. The principal method makes use of a concentric cylinder system designed and developed at RheoActive, equipped with a stepper motor and a torque sensor. It operates horizontally to eliminate settling of the particles. The second method uses a slit geometry. Dr. Boyle refused to say whether he obtains the same results from both instruments. He then showed us a Ford Thunderbird in which they have replaced the original reactive shock absorbers on all four corners with reactive ER shock absorbers. The ER system utilizes the control signals of the original system, but they intend to make the system fully interactive in the future.

The visit terminated with lunch at a nearby restaurant.

SITE VISIT REPORT B.3

PROFESSOR ERNEST B. YEAGER

January 28, 1992

The purpose of this visit was to obtain advice and information on possible electrode processes which could take place during the operation of ER devices. Professor Ernest B. Yeager is a foremost electrochemist and founder of the Center for Electrochemical Sciences at Case Western Reserve University. The visit took place at his office.

Dr. Yeager said that Faradaic processes would be deleterious. With water present, hydrogen and oxygen could be evolved, and oxide films formed on the electrodes. Electrochemical reactions could occur with surfactants and other ionic ingredients or contaminants. The particle surfaces could contribute electrical capacitance due to their high area and/or micro-roughness. Also to be looked for would be decomposition of surface components under the high local voltage gradients.

Dr. Yeager is not aware of any literature regarding electrode processes in ER fluids. He points out that there should be a number of papers dealing with electrode processes in high-voltage oil-filled capacitors. Although this tells nothing about the behavior of dispersions, it could relate closely to the behavior of the dielectric medium.

Irvin M. Krieger

SITE VISIT REPORT B.4

DR. VAMAN G. KULKARNI
Americhem, Inc.

Report on Telephone Contact
March 8, 1992

re
CONDUCTIVE POLYMERS

Kurt Wissbrun

Having obtained his name and telephone number from Dr. E.A. Collins, I telephoned Dr. Kulkarni. He was not familiar with the ER fluid technology, but did recall having some previous contact with Dr. Collins. He sent, as promised, some literature on the polyaniline conducting polymers. These are apparently manufactured by Allied-Signal, and are being marketed for uses such as EMI shielding conductive polymers by Americhem.

The polymers are highly conductive, and can be obtained as fine powders for dispersion into insulating matrix polymers to make thermoplastic composites with conductivities as high as 20 S/cm. My impression is that such highly conductive particles would not be suitable as such for ER fluid dispersions because the conductivity of the fluid would be unacceptably high. The polyaniline particles could be encapsulated by an insulating polymer if desired.

I did not believe that a personal follow-up contact was necessary at this time, but will keep the literature available for other members of the Panel who may have an interest.

SITE VISIT REPORT B.5

LORD CORPORATION CORPORATE RESEARCH LABS
Cary, North Carolina

Reporter: John R. Wilson

Persons Visited: Mr. David Thomas, Associate Director
Dr. Ted Duclos, Project Leader
Mr. Rick Butters, Business Development Manager

Initiated in mid-1984, Lord Corporation's program on ER fluids and their applications was supervised starting in 1985 by the writer (as Vice-President, Corporate Research and Development for Lord). It was, and is, one of the very few programs that has attempted to develop ER fluids and their applications side-by-side in the same laboratory.

Lord has a very well equipped ER fluid laboratory with the capability to make dynamic rheological measurements under a wide range of conditions as well as measurements of the electrical and other properties. The focus of the laboratory has always been on the measurement of properties of engineering importance, rather than the development of a basic understanding of ER fluids. The company's expertise in the materials and basic sciences areas is still limited, although improved.

In addition, in keeping with its long involvement in the field, Lord has excellent mechanical and electrical engineering laboratories with special emphasis on the development of hardware and software for the active control of motion and vibration in automotive and aerospace structures. The company has made major contributions in the area of active suspension control, primarily using computer-controlled conventional (*i.e.*, non-ER) hydraulic dampers and related hardware.

Since 1985, Lord has developed an extensive range of ER fluids. Early work focussed on a variety of fluids based on silicone oils, generally following literature "prescriptions", but since 1986, the company has developed a wide range of proprietary fluids of all types. Most of this work is viewed as proprietary by the company, and little has been published although a number of patents have been issued or are pending. The fluids developed are based upon a range of non-conventional base fluids that offer the requisite dielectric properties (*e.g.*, perfluorinated polyethers) as well as an unusual selection of dispersed phases (such as a number of semiconducting organometallic dyes). Other novel particles have included semiconducting glasses, oxidized metal particles, "doped" metal oxide particles, and

selectively doped silicon and other semiconducting materials. Both "water-activated" and totally anhydrous systems have been evaluated, with emphasis on the latter.

In parallel with this fluid development program, Lord developed a number of demonstrations of potential ER fluid applications (such as clutches and dampers) that were seen in public, as well as a few with real commercial potential that were not publicized. The latter included "active" engine mounts for automotive use (to control engine shake and vibration) and "active" cab mounts for use in truck ride control. Such applications were generally developed in "ER" and "non-ER" form. To date, the non-ER forms have been more successful because of fluid performance limitations.

ER fluid development continues at Lord, despite rumors to the contrary, although the level of effort has been reduced somewhat since 1988, when Lord decided to end its involvement with the automotive industry. Most current effort is focussed upon the development of fluids with acceptable engineering properties, such as high dynamic shear strength and low electrical conductivity combined with chemical and physical stability. Little applications work is now in progress; what there is was not discussed in detail and relates to non-automotive applications, primarily for the truck (*e.g.*, cab mounts) or aerospace markets in which Lord has a significant involvement. Duclos and Butters agreed with the writer that until better fluids are developed and understood, further applications development work is of little value.

Historically, Lord has supported a number of basic university studies (*e.g.*, at Stanford (Gast), Liverpool (Sproston *et al.*) and elsewhere). The company was also closely affiliated with the now-discontinued program at ICI and, through the activities of Dr. David Carlson, promoted numerous seminars and meetings in the ER field.

A disappointing feature of the meeting was the mutual conclusion that there had been few real advances in the field since this writer's last active involvement in 1988. While progress has been made - mostly unpublished - in developing fluids of higher performance, the level of performance attained is still insufficient for most of the proposed applications of fluids. Maximum dynamic shear strengths are still in the range below 5 Kpa, although higher values have been reported based on measurements that Lord consider of doubtful quality. Conductivities in most cases are unacceptably high and there is still insufficient information on such important issues as long-term stability and materials compatibility. No new applications with a realistic chance of success have surfaced in recent years.

The Lord representatives and the writer agreed that further applications development - and even the development of new, high-performance fluids - should be deferred until a better understanding of the fundamental physics and particle dynamics of ER fluids is developed. At present, both fluid developers and applications developers are "flying blind". Since industrial organizations such as Lord are unlikely to undertake such work in the absence of external funding (Lord, like many corporate labs, will undertake contract work), further progress is likely to depend upon the availability of funding of such studies from government and foundation sources.

The conclusion that such basic information is necessary, but lacking, has prompted Lord (and numerous other companies) to reduce or discontinue their activities in this field. Because ER fluids have now been through at least three cycles of anticipation and extensive effort, followed by disappointment, it may be very difficult to interest any corporation in the future in the absence of such basic data and understanding.

The discussion at Lord was friendly and productive, as well as realistic. Lord continue their commitment to this field, but are waiting for others to develop the information that they feel is necessary before "real" applications will materialize.

SITE VISIT REPORT B.6

XEROX RESEARCH LABORATORY
Mississauga, Ontario, Canada

Date: March 11, 1992

Visitor: Professor T.G.M. van de Ven

Purpose: Explore similarities between suspensions used for electrically induced imaging and printing and suspension used for electro- rheological fluids.

Contacts: Drs. M. Croucher, J. Oliver

Since much of the suspension technology used by Xerox is confidential, no precise details about suspension composition can be reported. Hence we will sketch only the general outline of what emerged from our discussions.

A variety of applications exist in which suspensions are used in imaging and printing that involve applying electric fields. Examples are: (i) creating electronic displays by moving electrically charged particles in a non-aqueous medium onto a surface at specific locations with the objective of creating an image; (ii) color printing in which colored sterically stabilized colloidal particles are brought upon a charged dormant image; and (iii) electrorheological inks for use in inkjet printing. The first and second applications involve suspensions that have the same characteristics as electrorheological fluids in which an organic liquid is the continuous phase, while the third application involves aqueous systems.

An extensive technological know-how is available to prepare stable dispersions with the required electrical properties, especially regarding ways of charging colloidal particles in non-polar media. This technology would be equally useful in the engineering of durable rheological fluids.

In discussing the present state of the art in rheological fluids, it was felt that far too little emphasis was placed on engineering the right kind of suspensions. Most research has been going on to designing "gadgets" instead of concentrating on the electrorheological fluids themselves. The requirements of a good electrorheological fluid seem obvious: well stabilized colloidal particles (preferably steric stability with anchors covalently bound to the surface), which are high polarizable. This can be achieved, for instance, by absorbing a polar liquid into hydrophobic particles. The steric stabilizing layer should be thick enough to prevent charge transfer between particles to avoid ohmic current. It is believed that producing such suspensions presents no problems and can be achieved with present technology. The fact that no durable electrorheological fluids are available is ascribed to the fact that people with the wrong skills have been attacking the problem of designing electrorheological fluids.

SITE VISIT REPORT B.7

FORD MOTOR COMPANY, DEARBORN, MICHIGAN

Andrew M. Kraynik
March 4, 1992

My one-day visit with the staff at the Ford Motor Company had been arranged by L. Craig Davis of their Physics Department. Technical discussions were held with Dr. Davis, John M. Ginder and Kenneth C. Haas, all of the Physics department, and with Dale L. Hartsock if their materials reliability Department. The responses which follow represent a synthesis of their individual opinions.

Q. When did you start working on ER fluids? What caused your original interest?

A. Ford research became actively involved with ER fluids in January of 1990. They have funded work at North Carolina State University under the direction of H. Conrad and A. F. Sprecher. Ford was interested in evaluating the feasibility of ER fluid technology for "the usual" automotive applications, including body panel damping.

Q. Where are your current efforts directed?

A. Efforts in the materials group have focused on the evaluation of ER fluids "in production", meaning fluids developed by outside groups but not necessarily commercially available. The physics group is currently involved in developing noninvasive optical methods to probe the time scale for electrically induced structure formation in ER fluids. They are also performing computer simulations using finite element methods to study electrically induced interparticle forces caused by the bulk polarization mechanism. Computer simulations are also being used to predict the dynamics of structure formation in ER suspensions.

Q. What have you published or patented?

A. Ford has no patents on ER technology. They have published a very comprehensive article on "ER Fluid Requirements for Automotive Devices" by D. L. Hartsock, R. F. Novak and G. J. Chaundy [*J. Rheology* 35, 1306-1326 (1991)]. Other publications include:

J. M. Ginder and L. D. Elie, "Optical Probes of Structure Formation in Electrorheological Fluids", *Proc. Int. Conf. on ER Fluids*, R. Tao, editor, Southern Illinois Univ., Carbondale, IL, Oct. 15-16, 1991.

L. C. Davis, "Finite-element Analysis of Particle-particle forces in Electrorheological Fluids", *Appl. Phys. Letters* 60(3), 319-321 (1992).

L. C. Davis, "Polarization Forces and Conductivity Effects in Electrorheological Fluids", *J. Appl. Phys.* (submitted).

Q. What do you consider to be the most promising applications?

A. This question is best answered by including most of the Summary of the article cited above in the Journal of Rheology.

"In order for ER fluids to become commercially viable, the ER fluids must undergo considerable development work. In addition, the manufacturers will have to present complete engineering data, preferably using standard tests which are yet to be established. Even when these are done, ER fluid devices will be utilized on vehicles only when there is a real driving force and the ER fluid device is judged superior to all other concepts."

"For engine mounts, the current ER fluids are adequate *if the assumed properties can be obtained over the necessary temperature range.* Although current fluids are not sufficient for vehicle suspension shock absorbers, if the assumed near-term fluid properties are developed, then viable shock absorbers could be built. Thus the early application of ER fluids will probably be in damping applications."

"Clutches are not currently feasible unless innovative ideas are used to enhance torque and reduce the viscous drag. Incorporating such concepts will add to the complexity and hence to the cost of the device, making it more a challenge to reach production."

I was told that a Ford expert on shock absorbers was very impressed by a recent demonstration of ER shock absorbers installed on a Ford Thunderbird. The shock absorbers, the control system and the ER fluid were produced by RheoActive, Inc. and their parent company, Lubrizol, Inc.

Q. How do you characterize ER fluids?

A. Ford measures the yield stress, viscosity and electric current as a function of temperature in a concentric cylinder viscometer. They also assess settling characteristics.

Q. What do you consider to be the principal problems in developing ER technology?

A. Fluids! While some existing ER fluids may be acceptable for factory robotic applications in a controlled-temperature environment, the very narrow range associated with existing fluids is a "program stopper". Performance over a broader temperature range is critical! The development of control systems for ER devices was also identified as a problem area.

Q. Where is fundamental research needed in order to provide a better scientific basis for ER technology?

A. To quote from an article in the Journal of Rheology: "The mechanism of ER fluids is not well understood and hence what is theoretically possible is not known." The Ford staff feels that future research topics aimed at understanding ER fluids should include studies on: (a) particle polarization mechanisms, (b) chain structure, (c) ionic effects in both fluid and particle phases, and (d) the role of a.c. *versus* d.c. fields. Two important problems relating to the fluid mechanics of ER fluids were also mentioned: (1) filtration phenomena associated with pressure-driven flow in an ER valve, which can lead to a difference between solvent and particle velocities, and (2) instabilities associated with the flow of non-Newtonian suspensions in electric fields that vary temporally and spatially.

SITE VISIT REPORT B.8

DOW CHEMICAL COMPANY
Midland, Michigan

Andrew M. Kraynik
March 3, 1992

My one-day visit to Dow was arranged by Bob Cipriano. Technical discussions were held with Bob Cipriano, Gene Rose and Wayne Johnson. Answers to the questions which follow represent the collective view of those individuals.

Q. When did you start working on ER fluids? What caused your original interest?
A. Dow Chemical initiated the work on ER fluids in 1989. Their efforts were directed at conducting a market evaluation and determining the critical parameters that control the activity of ER fluids.

Q. Where are your current efforts directed?
A. Work on ER fluids was terminated in early 1992. The market assessment was very negative from the point of view of a commodity chemicals supplier.

Q. What have you published or patented?
A. Dow has obtained two patents and filed three others.

Q. What do you consider to be the most promising applications?
A. Based on their market assessment, Dow considers automobile engine mounts and shock absorbers to be the most attractive applications of ER technology because of technical feasibility and volume of chemicals required.

Q. Which applications of ER fluids can have favorable impact on energy production, consumption or conservation?
A. Shock absorbers may reduce gasoline consumption in automobiles, but this has not been quantified.

Q. How do you characterize ER fluids?
A. Concentric cylinder viscometry.

Q. What do you consider to be the principal problems in developing ER technology?
A. Formulating ER fluids with adequately matched fluid-particle densities, large electrically-induced yield stresses, and low electrical conductivity over a broad temperature range.

Q. Where is fundamental research needed in order to provide a better scientific basis for ER technology?

A. The Dow technical staff identified three areas to emphasize:

1. Systematic studies focusing on the structure of the particulate phase, including particle shape, polydispersity and density.

2. Improved understanding of the mechanisms giving rise to interparticle polarization forces.

3. Computer simulations to explore the upper bounds on electrically induced viscosity enhancement.

SITE VISIT REPORT B.9

ANONYMOUS AUTOMOTIVE INDUSTRY SOURCE[1]

Arthur B. Metzner
March 17 and 19, 1992

A. Vibration dampers on engines and shock absorbers

1. These devices may be close to commercial realization.

2. Better fluids are needed than those available, but an order-of-magnitude improvement is not needed.

3. It seems that developmental activities are needed, but not fundamental breakthroughs.

4. Zeolites dispersed in silicones or poly-α-olefins seem to be quite good.

5. They are not aware of homogeneous ER fluids that are as well developed as are dispersions.

6. The Hartsock article is quite negative; the present state of development may be better than the article implies.

7. The automobile industry is looking for improved ride and improved control – by improving shock absorbers.

8. They have not considered the possibility of improving energy efficiency through a smoother ride.

9. Both AC and DC fields are of interest.

10. Engine mounts may require that materials retain their desirable properties over a very wide frequency range.

B. Power take-off devices and transmissions

1. These are very demanding, and would seem to require order-of-magnitude improvements in fluids.

---

[1] This major automotive manufacturer wishes to participate in the study, but does not want to be identified by name.

2. These applications are of interest, but are not likely to be commercial very soon.

3. They are interested in the possibility of a Continuously Variable Transmission (CVT), which could allow engine speed to be maintained at an optimum value – optimized either for performance or fuel economy.

4. ER fluids are of interest to provide a new and perhaps broadly useful "enabling technology". They might permit lighter transmissions, and they might reduce problems of thrust and shock in the driveline. In these ways, ER fluids might lead to weight reductions and fuel savings, but no quantitative estimates are yet possible. Thus, ER fluids are beginning to influence thinking about mechanical design.

C. Fluid development

1. Lubrizol, RheoActive and Dow-Corning are all active.[2]

[2] Note that Rheoactive is a wholly owned subsidiary of Lubrizol.

SITE VISIT REPORT B.10

PROFESSOR LEE R. WHITE
University of Melbourne

The purpose of this discussion was to obtain advice and information on the role of free ions in particle and electrode polarization mechanisms and on how these would affect ER response. Professor Lee R. White is widely recognized for his work on the electrokinetic properties of suspensions and the dynamics of electrical double layers. The visit took place on March 3, 1992 in Professor White's office at the University of Melbourne.

Professor White said that, while the double layers that surround the particles at equilibrium will screen the intrinsic polarizability of the material making up the particles, the resulting electric field is still of long range and has a dipolar form. As a result, one might be able to develop a first-order model for the interaction of pairs of polarized particles by taking the standard interaction force developed for pairs of dielectric spheres in a dielectric fluid and substituting the dipole moment of the polarized particle. Professor White was unaware of any publications where this had been attempted.

Double layers building up at the electrodes will screen the applied field, with the length scale being a function of field frequency. Thus for perfectly polarizable electrodes (*i.e.*, electrodes which have been covered with a thin insulating layer), as the frequency of the applied field decreases to zero the field falls off over a length scale comparable to the Debye-Hückel length which, even for low-conductivity ER continuous phases, is still less than 100 micrometers. However, as the frequency of the applied field is raised, the field falls off across longer length scales such that the field at the center of the gap will increase and provide for particle polarization.

Professor White concluded by pointing out that his comments were based on investigations of systems where the applied field was much lower than those commonly encountered in ER suspensions.

Charles F. Zukoski

APPENDIX C

NOMENCLATURE

a	particle radius, major semi-axis of ellipsoid
a	dimensionless channel spacing ($a=H/\lambda$)
A	Hamaker constant
b	parameter in equation for non-Newtonian viscosity of dispersions
b	minor semi-axis of ellipsoid
B_2	second virial coefficient
c	parameter in Cross equation
c_2	concentration of solute
d	distance between charges
D_r	rotary diffusion coefficient
e_r	unit vector in r-direction
e_z	unit vector in z-direction
e_θ	unit vector in θ-direction
E	electric field (magnitude)
E, $\underline{E}$	electric field (vector)
E_0	reference value of E (usually 1 kV/mm)
f_k	($k=\parallel, \perp, \Gamma$) dimensionless functions of r_{ij} and ϵ_r
$\underline{f}_r$	rotary friction tensor
F_{ij}	electrostatic polarization force on sphere i due to sphere j
g, g_2, g_3	functions of r and ϵ_r
G	elastic shear modulus
G_0	elastic shear modulus at $t=0$
G_∞	elastic shear modulus at $t=\infty$
G^*	complex modulus
G'	storage modulus
G''	loss modulus
ΔG_m	Gibbs free energy of mixing
H	height of parallel-plate channel
H	relaxation spectrum function
I	electric current
J	compliance ($J=G^{-1}$)
J_e	equilibrium compliance

J_g	glassy compliance
J_r	retarded compliance
k	Boltzmann constant
K	parameter in Herschel-Bulkley equation
K′	material parameter
L	length of cylinder
L	polymer layer thickness
L	retardation spectrum function
M	molecular weight of polymer
M	torque
$\underline{M}$	torque vector
Ma	Mason number
N	particle concentration
N	number of segments of polymer
n	exponential parameter
q	charge on particle
p	pressure
$\underline{p}$	dipole moment vector
P	probability function
Q	throughput (volume/time)
Q_0	throughput in channel of infinite height H
r	radial coordinate
r	position vector
r_{ij}	distance between spheres i and j
R	electric resistance
R_1	radius of inner cylinder
R_2	radius of outer cylinder
s	ratio of particle diameter to electrode gap width
s	particle radius
t	time
t_p	percolation time
T	temperature
u	velocity
U	velocity of particle relative to fluid
v_1, v_2	partial molar volumes of solvent, solute
V_s	interaction energy

w	width of parallel-plate channel
W	function in yield-stress equation: $W(\epsilon_r,\phi)$
W	ratio of random torques to electric torques
α	polarizability
$\underline{\underline{\alpha}}$	polarizability tensor
α_p	polarizability of particles
α_s	polarizability of medium
β	particle dipole coefficient: $\beta=(\epsilon_r-1)/(\epsilon_r+2)$
γ	shear strain
$\dot{\gamma}$	shear rate
γ_0	shear strain amplitude
γ_y	yield strain
Γ	polymer adsorbed per unit surface area
δ	exponential parameter indicating departure from quadratic behavior
δ	phase lag angle
ϵ_0	dielectric permittivity of free space
ϵ_r	dielectric constant ratio ($\epsilon_r = \epsilon_p/\epsilon_s$)
ϵ_p	dielectric constant of particles
ϵ_s	dielectric constant of medium
ζ	zeta potential
η	viscosity
η_0	low-shear limiting viscosity
η_0	viscosity in absence of electric field
η_a	apparent viscosity
η_s	viscosity of medium
η_∞	limiting viscosity at high shear rates
$[\eta]$	intrinsic viscosity
θ	fractional surface coverage
θ	angular coordinate in cylindrical coordinate system
θ_{ij}	angle with respect to z-axis of vector between spheres i and i
κ	electrical conductivity
κ_p	electrical conductivity of particle
κ_r	relative electrical conductivity (κ_p/κ_s)
κ_s	electrical conductivity of medium
λ	ratio of electrostatic to thermal forces ($\lambda=s^2E^2/(kT)$)
λ	length scale for ER fluid ($\lambda(E)$)

Π	osmotic pressure
σ	shear stress
σ_0	shear stress amplitude
σ_B	Bingham yield stress
σ_w	value of yield stress at reference field strength E_0
σ_y	yield stress
τ	time required for particle to move distance of one radius
τ	relaxation time
ϕ	volume fraction of particles
ϕ_m	maximum volume fraction
χ	parameter in Flory-Huggins equation
ω	angular frequency
$\underline{\omega}$	angular frequency vector
ω_1	angular frequency at which $\tan \delta = 1$
Ω	angular velocity of outer cylinder