DTIC
ELECTE
AUG 4 1993
S C D

NSWCDD/TR-92/280

AD-A267 391

IMPACT TESTING OF EXPLOSIVES AND PROPELLANTS

BY CHARLES S. COFFEY
RESEARCH AND TECHNOLOGY DEPARTMENT

and

V. F. DEVOST
ADVANCED TECHNOLOGY AND RESEARCH, INC.

JUNE 1992

Approved for public release, distribution is unlimited.

93-17466

NAVAL SURFACE WARFARE CENTER

Dahlgren, Virginia 22448-5000 • Silver Spring, Maryland 20903-5000

NSWCDD/TR-92/280

IMPACT TESTING OF EXPLOSIVES AND PROPELLANTS

BY CHARLES S. COFFEY
RESEARCH AND TECHNOLOGY DEPARTMENT

and

V. F. DEVOST
ADVANCED TECHNOLOGY AND RESEARCH, INC.

JUNE 1992

Approved for public release; distribution is unlimited.

Accesion For
NTIS CRA&I ☑
DTIC TAB ☐
Unannounced ☐
Justification
By
Distribution /
Availability Codes
Dist | Avail and / or Special
A-1

NAVAL SURFACE WARFARE CENTER

Dahlgren, Virginia 22448-5000 • Silver Spring, Maryland 20903-5000

DTIC QUALITY INSPECTED 3

FOREWORD

This report represents part of the results of an effort at the Naval Surface Warfare Center Dahlgren Division to understand the physics of impact induced ignition in energetic solid materials and from this to develop meaningful small scale impact tests. In this effort we have been fortunate to have received the support and encouragement from a number of individuals and organizations including Ms. S. C. DeMay and Mr. H. Richter of the Naval Weapons Center; Dr. D. Liebenberg of the Office of Naval Research; Drs. C. Dickinson, L. Roslund, R. Doherty, S. J. Jacobs,* H. Haiss, D. L. Woody; Mr. J. Davis; and Ms. B. A. Yergey of NSWCDD, and Professor R.W. Armstrong of the University of Maryland.

Approved by.

Kurt F. Mueller

KURT F. MUELLER, Head
Explosives and Warheads Division

*Presently at Advanced Technology & Research, Inc., Laurel, MD 20707.

ABSTRACT

The drop weight impact test is the simplest and easiest test that can be performed on small quantities of explosives or propellants, and yet it has only a minimal role in assessing explosive sensitivity or performance. This report examines the drop weight impact test as it is currently used, describes its major flaw, and suggests an alternative test that holds the promise of providing the impact energy required to ignite an energetic material. Other impact tests are described. One of these, the Ballistic Impact Chamber Test, measures the rate of reaction and extent of reaction during impact. This test demonstrates that during impact there are two forms of initiation reactions that occur: one that is very fast and is likely due to direct impact-shear initiation of the crystalline solids in the sample and, the other, a much slower component, is thought to arise due to burning of the sample.

CONTENTS

	Page
INTRODUCTION	1
ANALYSIS OF THE DROP WEIGHT IMPACT TEST	2
THE ENERGY TO IGNITION TEST	3
SAMPLE SIZE	6
THE IMPACT SHEAR TEST	7
THE BIC TEST	9
SOME EXPERIMENTAL RESULTS	10
SUMMARY AND CONCLUSIONS	12

ILLUSTRATIONS

Figure		Page
1	SCHEMATIC OF THE NSWCDD IMPACT MACHINE	14
2	SCHEMATIC OF IMPACTOR-ANVIL FOR THE ENERGY TO IGNITION TEST	14
3	TYPICAL ENERGY TO IGNITION TEST RECORDS OF THE IMPACTOR DECELERATION AND THE ONSET OF REACTION	15
4	SCHEMATIC OF THE IMPACT SHEAR TEST	15
5	SCHEMATIC OF THE SHEAR PROFILE DURING THE IMPACT SHEAR TEST, τ	16
6	SIMULTANEOUS ACCELEROMETER AND INFRARED OSCILLOSCOPE RECORDS FROM THE IMPACT SHEAR TEST	16
7	BALLISTIC IMPACT CHAMBER (BIC) TEST	17
8	TYPICAL PRESSURE-TIME RECORDS FROM THE BIC TEST	17
9	NORMALIZED FLUCTUATIONS IN THE INITIAL ENERGY RELEASE RATE, $((dE/dt)/\langle dE/dt \rangle)$, AS A FUNCTION OF THE VOLUME FRACTION IN INERT MATERIAL, V_{In}/V_0, FOR A NUMBER OF EXPLOSIVES AND PROPELLANTS	18
10	RATE OF PRESSURE INCREASE IN THREE NON-DETONABLE PROPELLANTS, LABELED 1 THROUGH 3, AND ONE EXPLOSIVE, LABELED 4, AS A FUNCTION OF IMPACTOR ENERGY IN THE BIC TEST	19
11	ENERGY RELEASED MEASURED IN THE BIC TEST AS A FUNCTION OF IMPACTOR ENERGY FOR SIX DIFFERENT PROPELLANTS	19

TABLES

Table		Page
1	ENERGY TO IGNITION VALUES OF A PROPELLANT-LIKE MATERIAL	5
2	RESPONSE OF EXPLOSIVES TO THE BIC TEST	12

INTRODUCTION

Perhaps the simplest and easiest test that can be performed on small samples of explosive or propellant materials is the drop weight impact test. Yet for all of its simplicity and ease of operation, this test plays a disappointingly small role in assessing the safety or predicting the performance of energetic materials.

The drop weight impact test goes back to at least the early nineteen hundreds when it was first used to assess the relative impact sensitivity of explosives.*,[1-4] A direct descendent of this test is still used today in the United Kingdom to obtain a measure of the impact "sensitiveness" of energetic solids. Similar tests have been developed in several other countries and many of these have become the respective national standard required for assessing the handling safety of energetic solid materials.[5-8] Since the 1940's much of the investigation in impact ignition of explosives has been conducted at the Cavendish Laboratory by Bowden, Field, and coworkers.**,[9,10]

Generally, the various drop weight impact tests all seek to determine the drop height at which the explosive or propellant samples react during some fraction of the number of impacts. Unfortunately, this concept of impact sensitivity is seriously flawed. The report will show that these Go No Go drop height criterion are an inappropriate measure of impact sensitivity. This should be no surprise, for other than as a means of obtaining a crude relative ranking of the impact sensitivity of various energetic solids, it has been impossible to find any other meaningful use for this data. Even the relative ranking by the 50 percent Go-No Go drop height has to be examined with care. Often the fluctuations in the 50 percent height are sufficient to change the relative ranking of materials whose impact sensitivities are similar. More important, from a safety standpoint, the relative violence of the response of different materials to impact may differ markedly although their 50 percent Go-No Go ignition drop heights are similar.

In this report, several new impact tests and concepts are presented that seek to avoid the failure of the standard impact test and attempt to obtain information relevant to the behavior of impact induced ignition in energetic solids under any arbitrary impact loading. The experimental and theoretical background that underlies most of the work presented here shows that shear and shear rate, during impact or shock, are responsible for establishing the energy localization or hot spot sites from which ignition starts.[11-13]

---

* Reportedly, G. Rotter first used a drop weight impact apparatus to test explosives in about 1905.
** The many papers from the Cavendish Laboratory on the impact initiation of explosives are too numerous to list here; however, see References 9 and 10.

ANALYSIS OF THE DROP WEIGHT IMPACT TEST

As with any test, it is wise to obtain an analysis of the expected physical behavior in order to better understand the test results. The physical behavior of the drop weight impact test can be modeled on a computer with all of the ancillary motions that such efforts seem to involve. The test also lends itself to an analytical solution which, while approximate, allows a more physically transparent representation of its behavior during impact.[14] Ultimately, both techniques will eventually fail because of our present inability to accurately describe the behavior of the sample material during impact. However, for most impact tests which use only a small sample size, the presence of the sample introduces only a minor perturbation into the overall behavior of the impact machine. Indeed, as it is currently used, the principal failure of the drop weight impact test will be shown to be independent of sample size.

A typical impact machine consists of an impactor of mass, M_1, and an anvil of mass, M_3. Often between the impactor and the anvil is a striker on mass, M_2, that transfers the impact force from the drop weight to the sample and anvil. An analysis treating the drop weight, striker, and anvil as a collection of mass-spring systems is given in Appendix A. A simple and versatile impact machine that has been used frequently at the Naval Surface Warfare Center Dahlgren Division (NSWCDD) is shown in Figure 1. Impact velocities in excess of 40 m/s can be achieved with this machine by accelerating a low mass impactor with elastic shock cords.

The important behavioral characteristics of the impact machine are determined by the natural frequency of each of its elements, $\omega = (K/M)^{1/2}$, where K is the effective spring constant of the element and M is its mass. For cylindrical elements, $K = (EA/L)$, where E is the elastic modulus, A is the cross sectional area of the element, and L is the length. Usually, for most standard impact machines $M_3 \gg M_1 \gg M_2$ so that $\omega_3 \ll \omega_1 \ll \omega_2$. In this limit, the force on the anvil and sample given by equation (A-15) is approximately

$$F_2(t) = \frac{K_1 K_2}{(K_1 + K_2)\omega_1} (2gh)^{1/2} \sin\omega_1 t \qquad (1)$$

where ω_1 is the natural frequency of the drop weight, h is the drop height, and K_1 and K_2 are the spring constants of the drop weight and striker, respectively.

In the above limiting case which is typical of most well designed impact machines, the duration of the impact is essentially determined by the drop weight and is independent of the amplitude of the impact. Once the force starts to go negative, rebound occurs. The more exact expression given by equation (A-15) in Appendix A shows that the half sine wave loading determined by the drop weight has superimposed on it an oscillating component due to the natural vibration of the striker. In a clean, well designed impact machine this is usually minimal. The mass of the anvil is usually so large that it has little or no role in the impact response. In this regard, most of the elaborate anvil bases constructed for the current standard impact machines are unnecessary. A computer analysis of the impact machine would show all of these features plus the various waves reflecting back and forth through the system until equilibrium is reached. However, this added detail is unwarranted mainly for the reason given below.

The major flaw in any attempt to measure explosive sensitivity by using the 50 percent Go-No Go drop height arises because, under these conditions, ignition always occurs at or near the maximum force levels. This is most easily seen by simultaneously monitoring the time of ignition with a photo-sensitive detector and the applied stress load with an accelerometer or strain gage. At the maximum force level, the elastic energy stored in the machine is also a maximum and it is this energy that gives the rebound. The energy put into the machine by releasing the drop weight from a height, h, is just M_1gh which is partitioned between the elastic energy stored in the machine, the plastic energy required to deform and heat the sample to ignition, plus the small but inevitable amount of energy lost in the machine during the impact. Unfortunately, there is no easy way to separate or distinguish these elastic and plastic energies from one another. As far as ignition is concerned only the plastic energy is important. Furthermore, it will be shown shortly that at or near the 50 percent ignition level, the amount of elastic energy stored in the machine often exceeded the amount of plastic energy required to deform and ignite the sample.

This inability to separate the elastic energy stored in the machine from the plastic energy dissipated in the sample essentially renders the drop weight impact machine useless for anything other than giving a crude ranking of sensitivity based on the Go-No Go drop height. Even this information is dominated by the stored elastic energy and, therefore, is machine dependent. Thus, it is unlikely that even the ranking of explosive sensitivities, based on their 50 percent Go-No Go drop height, will be accurately reproduced among different impact machines.

THE ENERGY TO IGNITION TEST[15,16]

Confronted with the failure of the standard 50 percent Go-No Go drop weight impact test, we have chosen to take advantage of the physics of the impact situation and seek an impact ignition test that minimizes the amount of elastic energy stored in the machine at the moment of ignition. Modern, plastic bonded explosives and propellants are much softer than the Rockwell 64 hardness of most impact machine tools. The sequence of events during the impact involves first a deformation of the comparatively soft sample material, followed later by a buildup of stress in the anvil, striker, and drop weight system. This stress buildup usually occurs after the sample has deformed and spread considerably. The static stress levels within the sample can be determined by the analysis developed by Schroder and Webster.[17]

In the energy to ignition test, we take advantage of this sequence of events by causing ignition to occur early during the impact when the stress levels are low and only the sample is undergoing deformation. This insures that most of the energy transferred from the impactor goes into deforming and heating the sample, and very little is stored in the machine as elastic energy. This requires a relatively high velocity impact of perhaps 10 m/s or greater, depending on the material. To simplify the impact, we have eliminated the striker and let the impactor impact directly on the sample and anvil. The sample is usually a pellet 5 mm in diameter and 1 mm high with a mass of approximately 40 mg.

The light from an ignition is monitored by three photosensitive diodes arranged 120 degrees apart around the outside of the anvil. The change in velocity of the impactor is determined by an accelerometer or some similar means. This is shown schematically in Figure 2. These measurements are recorded on a dual channel oscilloscope, a typical record of which is shown in Figure 3. The change in velocity of

the impactor at the moment of ignition is determined by integrating the accelerometer record from first impact to the moment of ignition as determined by the photo detectors.

If V_0 is the velocity of the impactor at the moment of first impact and Δv is the change in its velocity at the moment of ignition, the change in the kinetic energy of the impactor at the moment of ignition is

$$\Delta E = \tfrac{1}{2} M V_0^2 - \tfrac{1}{2} M (V_0 - \Delta v)^2. \tag{2}$$

Our experience with the more impact sensitive explosives and propellants indicates that $\Delta v \ll V_0$ so that

$$\Delta E = M V_0 (\Delta v). \tag{3}$$

If the velocity of the impactor is large, $V_0 > 10$ m/s, then for at least the more impact sensitive explosives and propellants, ignition will occur early during the impact when most of the energy transferred from the impactor is going into deforming and heating the sample, and very little is stored as elastic energy in the anvil-drop weight system. At this time, the stress on the sample-anvil is usually very small, on the order of a few Mpa. On this basis, we make the assumption that essentially all of the kinetic energy lost by the impactor is transferred to the sample. The energy required to ignite the sample is now approximately ΔE. It is convenient and informative to normalize the energy to ignition by dividing by the sample mass, m, to form the critical impact energy density required to cause ignition, $\Delta E/m$. This has to be one of the essential inputs into any calculation that purports to predict the impact response of an energetic material.

Table 1 gives a listing of the energy required to cause ignition of an explosive, composed predominately of ammonium perchlorate and aluminum, over a wide range of impactor velocities and masses. Interestingly, for this material at least there is not a large range of variation of the energy to ignition value over this rather large range in impact velocity and energy. Some of this variation is due to problems associated with proper gage operation at high impact velocities. At high impactor velocities, $V_0 > 50$ m/s, ignition occurs within 1 or 2 μs of apparent impact, which is uncomfortably near the limiting response times of the best currently available gages.

Finally, as noted earlier, the energy required for ignition is often less than the energy available from the 50 percent ignition drop height. For the above material, the drop height for 50 percent ignition using the standard Explosive Research Laboratory (ERL) impact test machine at NSWCDD is approximately 15 cm. The NSWCDD ERL machine uses a 2.5 kg drop weight, so that the energy available during impact is 3.7 J. If it is assumed that at least to first order the energy to ignition for this material is independent of impactor mass or velocity, as indicated by Table 1, then only approximately 2 J of energy are needed to cause ignition. The remaining energy is presumably stored as elastic energy during the impact or is dissipated by some other means.

The major problem that we have had with this test is that of insuring that the gage survives the impact at velocities in excess of about 20 m/s. This is the case,

TABLE 1. ENERGY TO IGNITION VALUES OF A PROPELLANT-LIKE MATERIAL

(Sample size, 5 mm dia. x 1 mm high; approximate mass, 35 to 40 mg.)

V_0 (m/s)		$\dot{V}$ (m/s)	E (J)	
1.4		.073	1.03	
1.4		.063	.88	
1.4		.065	.91	
1.4		.118	1.65	
2.8		.03	.84	
2.8		.053	1.47	
2.8		.064	1.8	
4.43		.035	1.75	
4.43		.041	1.8	
5.37		.023	1.23	
3.13		.098	2.97	
3.13	10kg	.087	2.66	
3.13	Impactor	.079	2.41	
3.13		.047	1.48	
3.13		.076	2.31	
3.13		.065	1.97	
3.13		.027	.84	
3.13		.535	15.31	Newly polished anvil
3.13		.157	4.81	and impactor surfaces.
3.13		.039	1.22	
3.13		.041	1.27	
3.13		.082	2.56	
3.13		.085	2.62	
3.13		.085	2.62	
3.13		.072	2.24	
90.7		2.37	3.42	
167.4	16kg	1.63	4.37	
168.4	Impactor	.48	1.3	
169.6		2.65	7.2	
69.1		2.87	3.17	
			<2.14>*	

*Average ignores the two polished anvil values.

particularly with the insensitive explosives and propellants, which require high impactor velocities to achieve ignition before significant stress buildup occurs. Often with these insensitive materials the impact velocity must be held below 20 m/s to prevent gage failure. This involves some compromise with the test requirement that very little energy be stored elastically in the machine before ignition occurs, but it allows an upper limit to be put on the impact energy required to ignite the sample. Clearly, the assumption that very little of the kinetic energy lost by the drop weight up to the moment of ignition is stored elastically in the impact machine, needs to be continually monitored by examining the stress on the components of the machine at the moment of ignition.

SAMPLE SIZE

For the energy to ignition test the sample size is important. Partly for historic reasons and partly for convenience we have chosen to work with 35 to 45 mg size samples. There appears to be nothing unique about this sample size. However, samples below 20 mg are difficult to ignite on impact. This will certainly be the case with the more insensitive explosives. On the other hand, samples of energetic secondary explosives such as HMX, RDX, and PETN may transit to a detonation if the sample size exceeds 150 mg. This was deemed unacceptable because a detonation would destroy the tools and reduce a simple lab scale test to one requiring a high degree of protection for the operators.

A more fundamental and more germane issue is that of the appropriate sample size required to relate the results of this test or, for that matter, any small scale test to the initiation of large scale charges. Bowden has shown that, at least for some primary explosive materials, the minimum hot spot size is of the order of a few tens of microns.[18] Our earlier heat-sensitive film experiments with plastic bonded explosives and propellants have shown that, at threshold, ignition begins in the regions of high shear and often at the site of the largest explosive crystal in this region.[19,20] In these experiments, in which the impact velocity was much less than that required to achieve a 50 percent ignition probability, pressure appeared to have no direct role other than as the forcing function that created the shear. These were simple symmetric impact experiments and threshold ignition always occurred near the outer edge of the sample during impact, where the pressure was a minimum and shear was a maximum. It never occurred in the regions near the center of the sample where pressure achieved its maximum value and shear was a minimum. From this, we infer that shear is the mechanism responsible for energy localization and subsequent ignition and that, for a practical test, the sample must be of sufficient size to allow shear to develop in a measurable way.

As the amplitude of the impact was increased by increasing the impact velocity, the number of ignition sites also increased and the ignitions occurred earlier during the impact induced deformation.[20] At impact velocities of 50 to 100 m/s on impact, sensitive materials' ignition occurred within 2 or 3 μs of impact. At these higher levels of impact, ignition often appeared nearer the center of the sample, but these were likely to be due to the correspondingly higher initial shear levels causing energy localization and ignition in some opportunistically aligned crystal earlier in the impact. However, in several thousand mild impacts, where the impact velocity never exceeded 5.5 μs and heat sensitive film was used to locate ignition, never was ignition observed to have occurred at the center of a symmetric impact experiment where shear is a minimum and pressure is a maximum.

The evidence cited above demonstrates that ignition occurs at local sites within the 35 to 45 mg sample. Since these local ignition sites occupy only a small portion of the sample, the implication is that the energy required to deform and heat the whole sample, as measured by the energy to ignition test, is an over estimate of the energy required to cause ignition which can occur at just one hot spot site. However, for practical reasons it is not possible to deal with this process on a single ignition site basis. Rather, it is necessary to treat this problem on a statistical basis in which the energy to ignition is established as the average energy required to cause ignition in a small sample, but one still large enough to contain a statistically significant representa-tion of the material of interest and its potential hot spots-ignition sites.

From these and similar results from other small scale tests, we conclude that the 35 to 45 mg sample size is adequate to determine the impact energy density required to ignite an explosive or propellant. As long as the large scale sample is sufficiently uniform to be adequately represented by these small samples, the impact ignition process should be the same in both. Equally important is the manner in which this initial reaction either grows to consume the entire sample, or eventually fades and dies away. This is a concern of the Ballistic Impact Chamber (BIC) test to be discussed later in this paper.

Obviously, what is missing from these small scale tests is the confinement available in a large charge. Any form of restriction, either inertial or otherwise, that alters the ignition or its growth will, to some degree, influence the final outcome of a test. In practice, there are so many possible impact events involving large charges and so very few large or small scale tests available to evaluate the hazards of any of these, that there is no choice but to combine small scale tests that give the energy to ignition and the rate of reaction growth with the appropriate data from a few large scale tests, along with the correct theoretical understanding of the ignition event. Together, the combination of large and small scale tests and the proper theoretical understanding should allow us to predict the shock or impact response of a large explosive charge.

Finally, since shear is the mechanism of ignition, the surfaces of the anvil and impactor are important because it is the friction at these surfaces that gives rise to the shear forces as the sample material deforms and spreads during impact. Experiments with the energy to ignition test showed that freshly polished surfaces considerably increased the amount of energy required to achieve ignition. This is shown in Table 1. However, a careful examination shows that with these polished surfaces ignition occurred later than with rougher surfaces, and it is likely that most, if not all, of the apparent increase in the energy to ignition was really elastic energy stored in the machine. From a practical testing point of view, we have found that it is not necessary to regularly resurface the anvil and impactor. After resurfacing, the initial three or four impacts gave anomalously high but decreasing measurements that asymptotically settled out to a repeatable value. This suggests that the reactions from the first few tests after polishing, burn and roughen the anvil and impactor surfaces to create a standard surface roughness which does not change much over a large number of subsequent reactions.

THE IMPACT SHEAR TEST

The energy to ignition test has been modified and extended in a number of ways. One of these, the impact shear test, is particularly relevant to the above discussion on ignition site size. The impact shear test was designed to introduce well defined, localized, shear induced hot spots into large samples, typically 1 to 50 grams of hard, difficult to deform materials. In order to maintain a controllable laboratory scale test, only non-detonable materials were used, chiefly nitrocellulose gun propellants. However, if required, the test could be performed with explosives by using an appropriate shelter. The NSWCDD impact machine, Figure 1, served as the test vehicle with which a 10 kg drop weight was used to impact and drive a 5 mm thick steel wedge into the sample. The angle of the wedge was 90 degrees. Reaction was detected by liquid nitrogen cooled, infrared detectors. The test is shown schematically in Figure 4.

The steel wedge created local shear in the sample during impact in the manner indicated in Figure 5. Without the shear and energy localization by the wedge, the critical energy density could not be achieved because of the sample size, and ignition would be impossible in any laboratory scale impact test.

Typical oscilloscope records of the acceleration and infrared emissions from an impact on a nitrocellulose propellant sample are shown in Figure 6. The presence of the wedge introduces a significant amount of ringing in the accelerometer record that is not present in the more streamlined energy to ignition test. However, integrating the accelerometer record from the moment of first impact until ignition occurred, gives an estimate of the change in velocity of the impactor up to the moment of ignition. From this, an estimate of the upper limit of the energy needed for ignition can be determined. For the nitrocellulose propellant in Figure 6, which was impacted by 10 kg released from 1.5 m, the change in the impactor velocity at ignition was approximately .12 m/s. From equation (2) the upper limit for the energy to ignition was approximately 7 J. The critical impact velocity to cause an occasional ignition was measured to be approximately 2.5 m/s (0.35 m drop height).

For the 1.5 m drop height (5.54 m/s impact velocity), ignition took place approximately 250 μs after the first impact. Since the drop weight slowed only slightly, $\Delta v = .12$ m/s, the depth that the wedge was driven into the sample when ignition occurred was about 1.4 mm. The volume of material displaced by the wedge at the moment of ignition was approximately 7 mm^3. It has been shown that for an ideal material, the volume of material plastically deformed by a 90-degree wedge is approximately five times the volume of the material displaced by the wedge.[21] Recognizing that nitrocellulose has a non-isotropic fibrous structure, and that, as with all impacts, some portions of the deformed material have been more severely worked than others, the volume of plastically deformed material was approximately 35 mm. Taking the density of nitrocellulose as 1.2 gm/cm^3, the upper limit of the energy density required for ignition was about 160 J/gm. Keeping in mind that this represents an overestimate on the energy needed for ignition, it is not too different from that of a similar material in the more accurate energy to ignition test, E = 110 J/gm. To establish an energy density of 110 J/gm throughout an entire 20 gm sample would require a drop weight of 140 kg released from 1.5 m. The use of such a drop weight mass exceeds even the broadest definition of a small scale test.

As with the energy to ignition test, the actual hot spots-ignition sites occurred in much smaller volumes than the total volume of the nitrocellulose sample deformed by the wedge during impact. Typically, ignition was located in the heavily plastically deformed regions near the tip of the shear wedge. Often, ignition appeared associated with cracks propagating longitudinally away from the tip of the wedge, although it can not be definitely stated which came first, the crack or the reaction. However, crack surfaces formed in this same region during impacts in which no infrared emissions were observed, and by inference no reaction occurred, contained no evidence of reaction products that could be detected by X-ray Photo Electron Spectroscopy (XPS) in post-impact analysis.[22] The XPS analysis can detect product molecules present at levels of 10^{-10} gms. When reaction did occur as indicated by infrared emissions, noise, and smell, the XPS evidence showed that substantial amounts of product molecules existed on the crack surfaces in the plastically deformed region close to the wedge. Here, as with the crystalline materials, it is most likely that shear in the nitrocellulose sample caused ignition to occur in small regions

of the deformed material. No substantial force build up was observed to have occurred at the time of ignition on any of the force measuring gages that monitored the force on the grain during impact.

THE BIC TEST[16,23]

Initiation of a chemical reaction is not sufficient by itself to predict the response of an explosive or propellant charge to an arbitrary shock or impact. The growth of the reaction in the energetic material has a major role in determining its response to these stimuli. As with the energy to ignition test, the number of real life circumstances that could effect the growth of reaction is too large to deal with in anything but a general way. The object of the BIC test is to obtain information on the growth and extent of reaction in a simple and, hopefully, understandable impact test, and to rely on our developing understanding of the impact ignition processes to extend this data to more general circumstances.

The BIC test is a quasi-confined impact test.* It consists primarily of a cup-like anvil which holds the sample and provides guidance to a carefully fitted striker. The striker is equipped with an "O" ring which fits tightly against the walls of the anvil cup. Rebound of the striker is prevented by mechanical means so that, together with the anvil cup, it forms a quasi-confined volume in which the impact induced reaction occurs. The anvil cup contains two ports: in one is mounted a pressure gage, and in the other is mounted a 0.177 caliber pellet gun pistol barrel. A 0.513 gram, 0.177 caliber pellet is accelerated down the barrel by the hot reaction gases. This serves both as a means of measuring the mechanical energy available from the hot reaction gases and as a means of controlling the pressure in the quasi-confined volume. The anvil cup and striker are mounted on the base anvil block of the NSWCDD Impact Machine as shown in Figure 7.

Since the standard 50 percent drop height test has only a limited meaning, it was decided to initiate the sample with a fixed impact that would be sufficient to ignite all explosives and propellants regardless of their sensitivity to impact. In this way it would be possible to measure the response of all materials to the same impact. For explosives, the impact is achieved by releasing a 10 kg mass from 1.5 m drop height. To insure a large enough shear to cause ignition in all possible energetic materials, a piece of 180 grit garnet paper is placed on the anvil and the sample is placed on top of it.** For impact sensitive materials such as propellants, a 2.5 kg

* A confined volume impact test for liquids and propellants has been developed and marketed by Technoproducts Olin-Mathieson, Inc., D.N. Griffin, American Rocket Society Technical Paper 1706-61, Palm Beach, Fla., 1961. This test has been further refined by J.T. Bryant and S.E. Wood, AIAA Journal, No. 10, 1975, p. 1410.

**The presence of garnet paper on the anvil is an attempt to insure that all samples experience the same shear forces during impact. This shear is developed as the sample flows across the surface of the anvil during the impact and arises due to the friction force between the sample and anvil. To illustrate the effect of this surface friction, a series of standard impact experiments were performed on the impact sensitive explosive PETN which had a 5 μ particle size. The explosive was in a loose powder and carefully dried under vacuum. The tests were conducted over several humid days in June 1991 at NSWCDD. Immediately after drying, the 50 percent Go-No Go drop height was measured to be 8 ± .5 cm on our machine as it was configured at that time. Over a 2-hour time interval, the PETN powder had absorbed enough moisture from the humid air so that the 50 percent drop height had increased to 12 ± 2 cm. When the material was again dried under vacuum at the 50 percent drop height, it again returned to 8 ± .5 cm and, over a 2- hour interval, increased to 12 ± 2 cm. This sequence of tests were repeated a number of times.

PETN is not a particularly hydroscopic material but the effect of even a small amount of water in reducing the surface and interparticle friction is evident. Most modern PBX and propellant materials have binders that are impervious to water. The garnet paper is an attempt to establish a sufficiently large surface friction force to overwhelm the smaller, uncontrollable and often unrecognized forces that perturb the deformation of the sample during the BIC impact.

mass impactor is used. For these materials, the BIC test results are independent of the presence or absence of the garnet paper. The sample size is 45 ± 3 mg in the form of a 5 mm diameter disc about 1.2 mm thick.

The hot gases from the impact induced ignition accelerate the pellet down the barrel and the resultant work and rate of work provide a measure of the extent and rate of growth of reaction. Several representative pressure-time records are shown in Figure 8. The pellet velocity, V(T), is obtained from the pressure-time records

$$V(T) = (A/m) \int_0^T P(t)\, dt \qquad (4)$$

where A is the cross sectional area or the gun barrel, m is the mass of the pellet, P(t) is the time-dependent pressure, and T is the time measured from the moment of ignition. A large number of tests were run with a velocity gate located at the end of the gun barrel to measure the exit velocity of the pellet. The measured pellet velocity and the velocity calculated from equation (4) always agreed to within better than 10 percent. The kinetic energy of the pellet is just $E_p = \frac{1}{2}mV(T)^2$. For comparison, it is helpful to divide this energy by the sample mass to obtain an energy density (J/gm).

SOME EXPERIMENTAL RESULTS

An examination of the BIC test pressure-time records reveals that there are two distinct types of reactions occurring during impact as shown in Figure 8. One of these is a very fast reaction that occurs at the beginning of the impact induced ignition. The second is a much slower reaction that follows the initial fast reaction. In addition, often the slower reaction has superimposed on it bursts of pulses from late occurring fast reactions. Typically, the rate of pressure increase in the fast reaction was 1.0 to 10.0 Mpa/μs, while the pressure rise of the slower reaction was usually .01 to .1 Mpa/μs. Depending on the material, the peak pressures reached in these reactions are of the order of 10^{-1} Mpa for insensitive explosives, and 10 Mpa for sensitive materials like HMX and RDX.

A number of experiments were performed using heat sensitive film and decreasing the drop height so that reactions were quenched just after they had started. These showed that the initial fast reactions were due to the impact initiation of large single crystals or an agglomeration of crystals located in the high shear region near the outer edge of the sample disk. In several experiments the samples were seeded with up to five large crystals prior to impact. The number of fast pressure pulses due to the fast reaction component almost always corresponded to the number of crystals added to the sample. With the heat sensitive film, it was easy to show that these fast reactions occurred at the sites of the large crystals. Because of the mild impacts very little of the sample mass was consumed by burning.

Our present understanding of these two types of chemical reactions suggests that the initial fast reaction component is due to impact induced solid state reaction in the larger crystals located in the high shear regions of the sample. This is basically the shear band-energy localization-hot spot ignition picture.[11,12,13] This theoretical picture states that, depending on the amplitude of the applied shear stress, the energy localization can be a very fast solid state process that accounts for

the initiation of reaction in crystalline solids during shock or impact. For high level shocks, it can account for the very fast molecular dissociation rates required for detonation. Here the BIC test measures these solid state reaction rates for low velocity impacts. The second slower reaction is believed to be mainly due to burning.

The initial very fast reaction is an important measure of the violent explosion and detonation hazard of an energetic material to low-level impact. Both the peak pressure and more importantly, the rate of pressure increase, provide measures of the extent and rate of the initial reaction of an energetic material to mild impact. For an energetic, fast reacting explosive like PBX-9404, the peak pressure is typically 10 Mpa and the initial rate of reaction is 1.3 Mpa/μs. At the opposite extreme, for the insensitive explosive TATB these quantities are .3 Mpa and .02 Mpa/μs. A good measure of insensitivity to shock or impact appears to be the degree to which this initial fast reaction is minimized or even eliminated. This is under-standable from a theoretical point of view since it minimizes or eliminates the fast acting impact or shock driven solid state reactions.

The fluctuations in the rate of pressure increase are important in determining the susceptibility of an energetic solid to a violent response from a shock or impact. The fluctuations provide a measure of the interaction of an initiation site with the surrounding explosive. As such, they can potentially provide a link between small scale tests and the ability to predict the response of large scale charges to an arbitrary shock or impact.[24] Experimentally determined fluctuations for a number of PBX explosives as a function of explosive content are shown in Figure 9.

To illustrate the importance of the initial rate of reaction, Figure 10 shows the initial rate of pressure build up for four different materials for which the standard BIC test procedure was modified to allow the impact energy to be varied. Three of these materials (1 through 3) were nondetonable propellants and the fourth (labeled 4) was a detonable propellant. The BIC input energy was varied by reducing the mass from 10 to 2.5 kg, or reducing the drop height from 1.5 m to .6 m. Each data point is an average of at least ten impacts. For the mildest impacts, the soft PBX-like detonable propellant was the least responsive of the four materials. However, as the energy and velocity of impact increased, the detonable propellant developed a very rapid increase in reaction rate as reflected in the rate of pressure rise. The non-detonable propellants showed only a more or less linear increase in reaction rate, much the same as if only a slow increase were taking place in the number of particles undergoing reaction as the energy and velocity of the impact increased.

Propellants are designed to burn. Consequently, in the BIC test, the propellant samples are entirely consumed during the burning reaction. Therefore, the total energy in the sample is available to accelerate the pellet. This has been confirmed numerous times in the BIC test where the total energy transferred to the pellet for a given propellant type seldom varies more than 10 percent from its averaged value. Figure 11 shows the pellet energy for several different propellants in which the BIC impact energy was changed by changing the drop weight mass and the drop height. Each data point represents an average of the results of at least ten impacts.

This regular behavior of the pellet energy does not occur with explosives since, generally, they do not burn but rather tend to extinguish reactions at low pressures. Consequently, explosive material usually remains on the anvil after the impact while no material remains after impacts on propellants. For explosives, the failure to totally consume the entire sample is reflected in the variations observed in the pellet energy, which often approach 50 percent or more. Using the standard BIC test

configuration, the initial pressure build up rate has given a reasonably good ranking of the bullet impact sensitivity for a number of explosive and propellant materials. This is shown in Table 2.

TABLE 2. RESPONSE OF EXPLOSIVES TO THE BIC TEST

Explosive	<dp/dt>(psi/μs)	<E>(J/gm)	
			MOST SAFE
NTO (10 percent RDX)	2.2		
TATB	7.2	10.7	
C-4	13.		
N-109	21.4	65.4	
N-110	23.6	59.4	
N-106	27.	117.	
W-121	32.	57.	
F-108	37.	66.	
N-103	50.	215.	
W-114	50.	146.	
W-201	51.		
N-5	53.		
W-108	54.	98.7	
W-9	66	54.	
W-115	79.	163.	
Comp-B	113.	163.	
H-6	176.	90.	
HMX	203.	163.	
			LEAST SAFE

SUMMARY AND CONCLUSIONS

The small scale tests described here were developed as part of an ongoing investigation of the impact and shock initiation processes that has been undertaken at NSWCDD. These tests represent perhaps the best of several novel impact tests that have been developed in the course of the investigation because they most clearly provide some of the data necessary for the correct prediction of the response of large scale charges to arbitrary shock or impact.

At this stage, it is too early to assert that these tests and their outputs represent the final form necessary to describe impact initiation and subsequent reaction growth. It is expected that as our understanding of these processes develops, the tests and their interpretation will also change somewhat. However, because of the fundamental importance of their basic data to the physics and chemistry of the initiation and growth processes, it would seem unlikely that significant changes would occur in the present tests. More than likely, it will be necessary to supplement these tests with other tests in order to obtain sufficient data to predict the response of an energetic material to an arbitrary shock or impact.

Finally, over the 90 years or so that have passed between the time of the first impact tests on explosives and today, a considerable amount of frustration and skepticism has been built up over the failure to obtain meaningful and repeatable

impact test data. In large part, this is due to the failure to understand the physics of this seemingly simple test and, in particular, how, when, and where the impact ignition first occurs. In point of fact, the impact test is not a simple test but, rather, a fairly complicated one, and one that is further clouded by the inevitable variability that seems inherent in the material properties of all physical materials. In spite of this, the drop weight impact test is perhaps the simplest possible impact test. If we cannot understand this impact test and its results, then there is little hope that we will ever be able to understand and predict the impact response of energetic materials in more complicated and realistic situations.

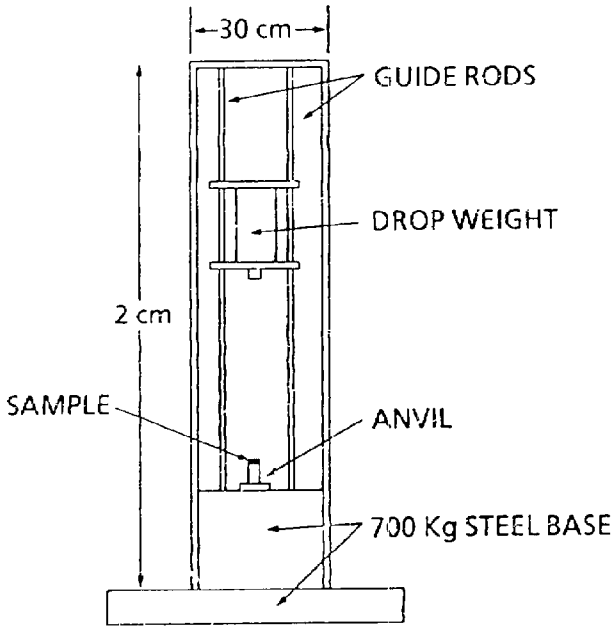

FIGURE 1. SCHEMATIC OF THE NAVAL SURFACE WARFARE CENTER IMPACT MACHINE

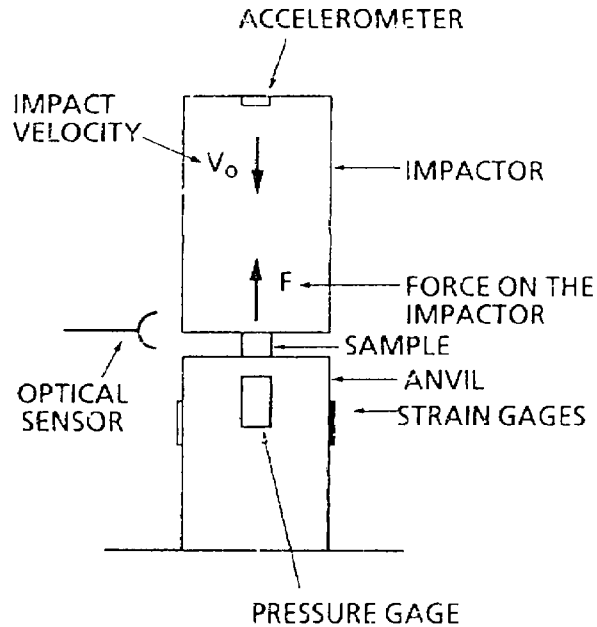

(Shown are the approximate locations of the accelerometer, strain gages, and pressure gage used to measure the force on the impactor-anvil during impact. During development often all three gages were used. Currently, only the accelerometer is used in the test and this is mounted inside the impactor within 5 mm of the impact surface. Early in the test development, a PDVF gage was mounted under the anvil and, while this is likely the gage of choice, it has yet to be incorporated into the current test.)

FIGURE 2. SCHEMATIC OF IMPACTOR-ANVIL FOR THE ENERGY TO IGNITION TEST

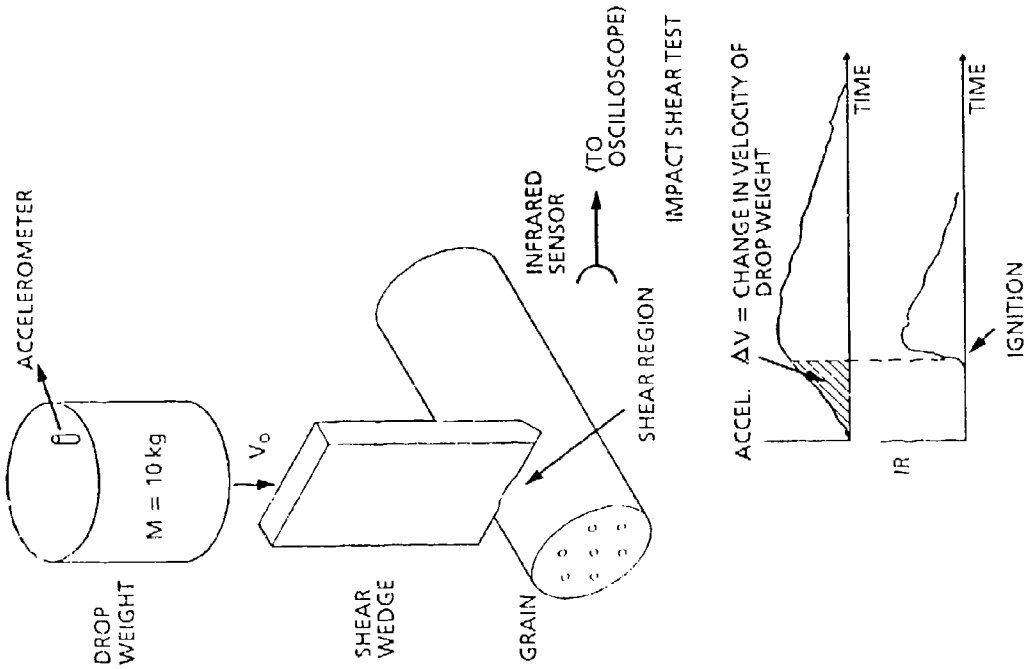

FIGURE 4. SCHEMATIC OF THE IMPACT SHEAR TEST

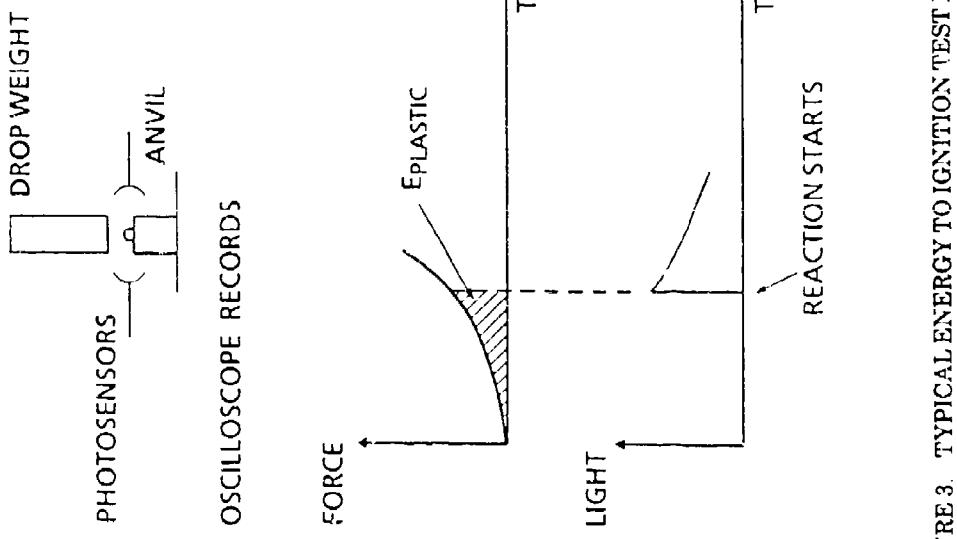

FIGURE 3. TYPICAL ENERGY TO IGNITION TEST RECORDS OF THE IMPACTOR DECELERATION AND THE ONSET OF REACTION

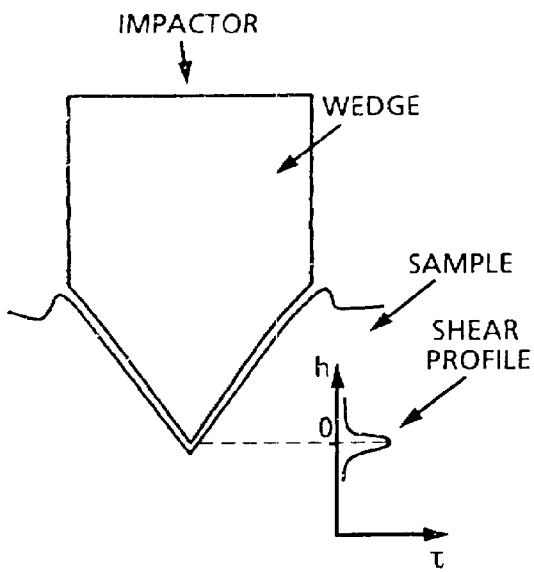

(The quantity, h, is the vertical displacement measured with h = 0 at the tip of the wedge.)

FIGURE 5. SCHEMATIC OF THE SHEAR PROFILE DURING THE IMPACT SHEAR TEST, τ

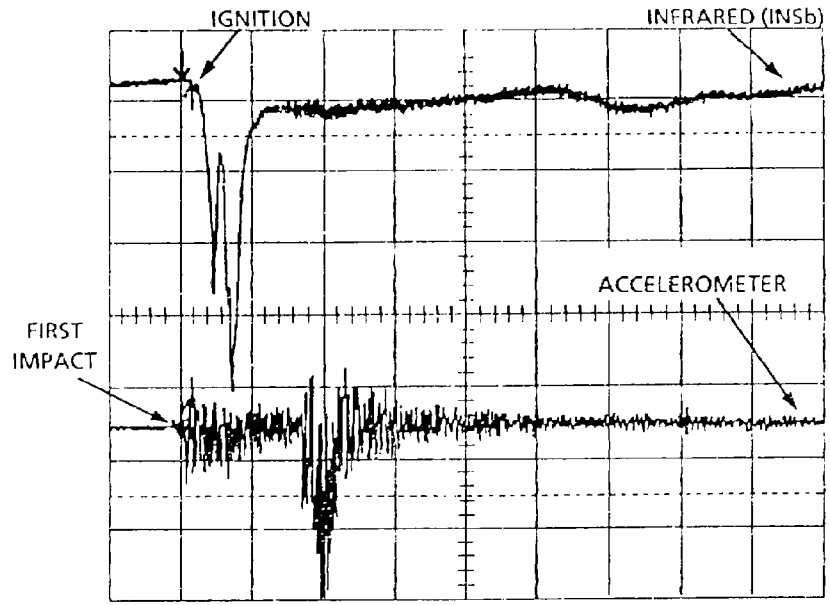

(In this test, a 10 Kg mass impactor was released from a height of .93 m above the sample. Ignition occurred approximately 280 μsec after first impact. The change in impactor velocity at the moment of ignition was approximately .14 m/s, and the kinetic energy lost by the impactor was E = 5.7 J. The time scale is 2×10^{-3} s per division. The vertical scale for the accelerometer record is 500 g's per division.)

FIGURE 6. SIMULTANEOUS ACCELEROMETER AND INFRARED OSCILLOSCOPE RECORDS FROM THE IMPACT SHEAR TEST

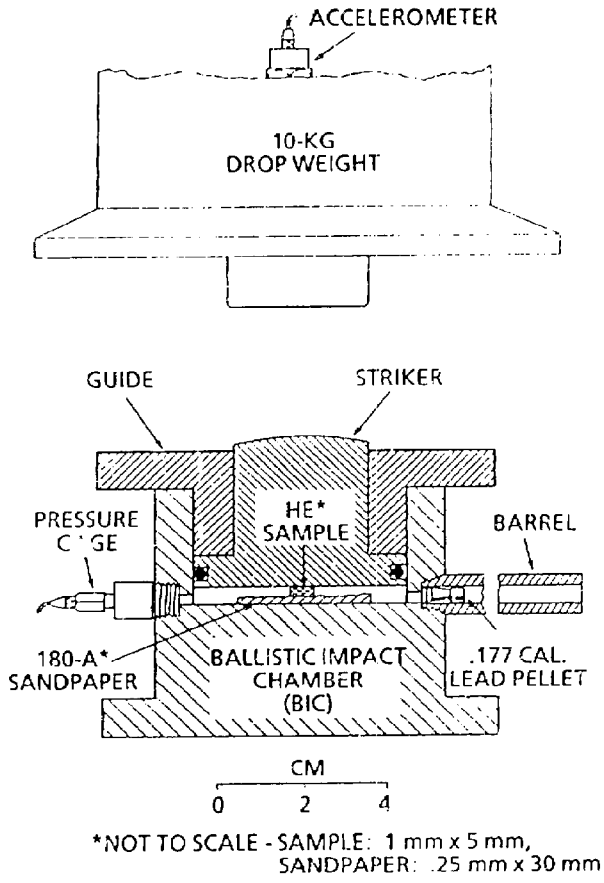

FIGURE 7. BALLISTIC IMPACT CHAMBER (BIC) TEST

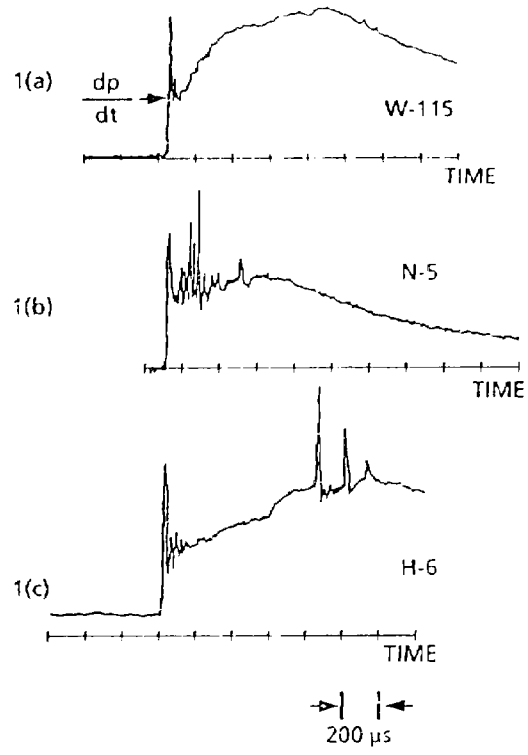

(The time scale is 200 µs per division.)

FIGURE 8. TYPICAL PRESSURE-TIME RECORDS FROM THE BIC TEST

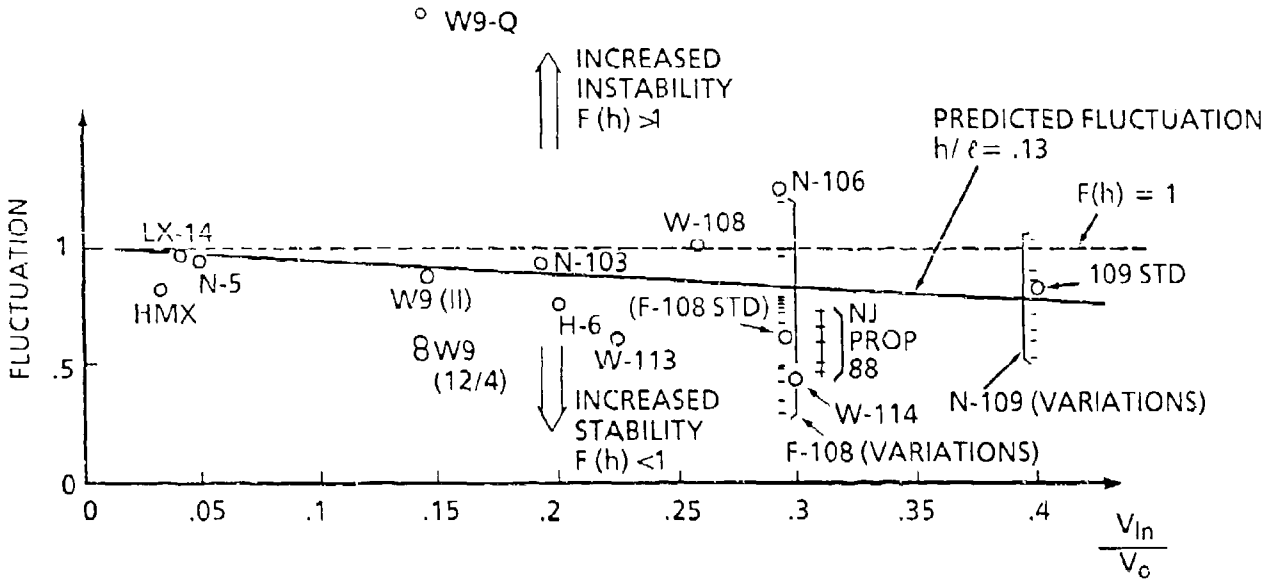

(Each data point represents the average of at least ten BIC impacts.)

FIGURE 9. NORMALIZED FLUCTUATIONS IN THE INITIAL ENERGY RELEASE RATE ((de/dt)/(dE/dt)), AS A FUNCTION OF THE VOLUME FRACTION IN INERT MATERIAL, V_{In}/V_0, FOR A NUMBER OF EXPLOSIVES AND PROPELLANTS

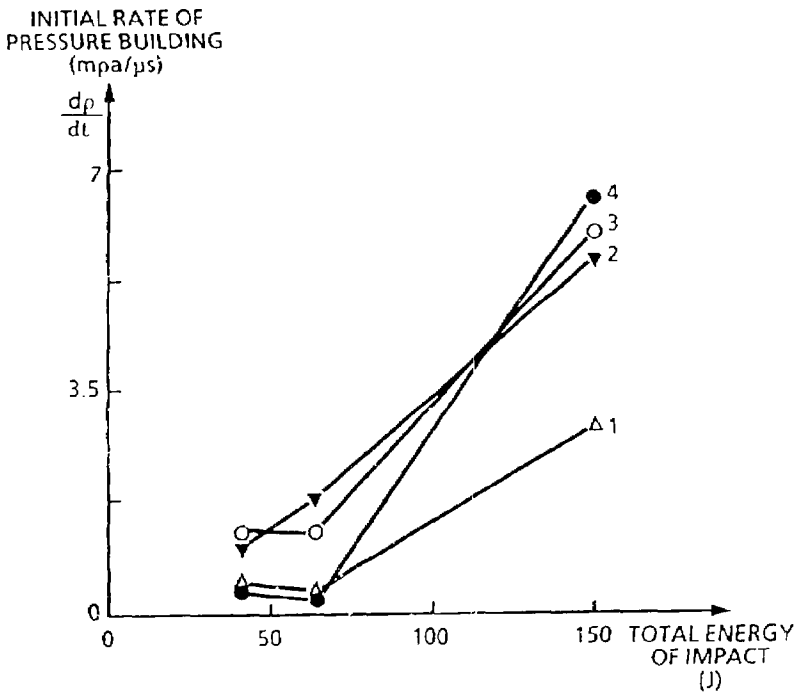

(Each point represents the average of at least ten BIC impacts.)

FIGURE 10. RATE OF PRESSURE INCREASE IN THREE NON-DETONABLE PROPELLANTS, LABELED 1 THROUGH 3, AND ONE EXPLOSIVE, LABELED 4, AS A FUNCTION OF IMPACTOR ENERGY IN THE BIC TEST

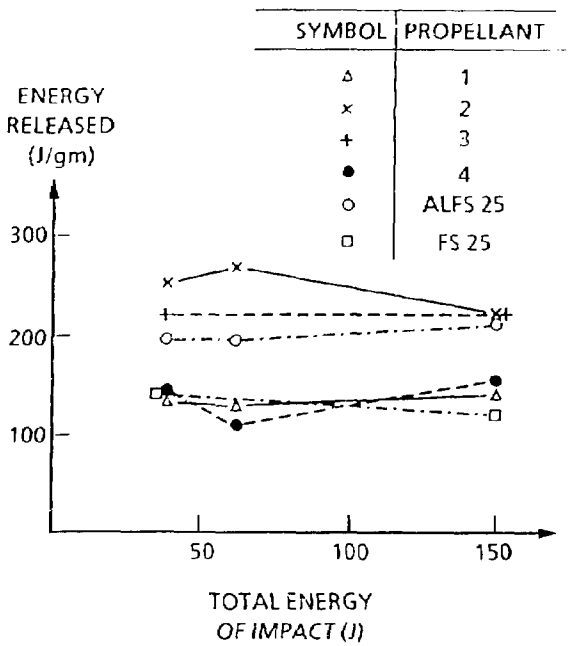

(These are average values of at least ten BIC impacts and have variations of less than ± 10 percent.)

FIGURE 11. ENERGY RELEASED MEASURED IN THE BIC TEST AS A FUNCTION OF IMPACTOR ENERGY FOR SIX DIFFERENT PROPELLANTS

REFERENCES

1. R. Robertson, Trans. Chem. Soc., p. 18, 1921.
2. J. Wilby and H.N. Mortlick in Proc. of the International Conference on Sensitivity and Hazards of Explosives, Eds. C. K. Adams and E. C. Whitbread, London, England, 1963.
3. W. Will, Zeits. Schiess-u. Sprengstoffwesen, 1, 209, 1906.
4. H. Kast, Zeits. Schiess-u. Sprengstoffwesen, 4, 263, 1909.
5. H. Xoenen, K. H. Ide, and W. Haupt, Explosivstoffe, 8, 178, 1958.
6. C.T. Afanos'ev and U.K. Bobolev, "Initiation of Solid Explosives by Impact," Israel Program of Scientific Translations, Jerusalem, 1971.
7. L. Avrami and R. Hutchenson, Energetic Materials, Vol. 2, E.D. Fair and R.E. Walker, Eds., Plenum Press, N.Y., 1977.
8. A. Macek, Chem. Revs., 62, 41-63, 1962.
9. F.P. Bowden and A.D. Yoffe, Initiation and Growth of Explosion in Liouids and Solids, Cambridge University Press, 178.
10. J. E. Field, G. M. Swallowe, and S. N. Heavens, in Proceedings R. Soc. London, A383, 1982, p. 231.
11. C.S. Coffey, Phys. Rev. (B), Vol. 32, No. 8, p. 5335, 1985.
12. C.S. Coffey, "Initiation of Explosives by Shock or Impact," Proceedings of the 9th Symposium on Detonation, OCNR Pub. 113291-7, p. 1243, 1989.
13. C.S. Coffey, "Localization of Energy and Plastic Deformation in Crystalline Solids During Shock or Impact," to be published in the J. of Applied Physics, Oct 1991.
14. V.F. DeVost and C. S. Coffey, Evaluation of Equipment Used to Impact Test Small Scale Explosive Samples, NSWC TR 81-215, 1981.
15. C.S. Coffey and V.F. DeVost, Critical Initiating Impact Energy of Explosives, NSWC TR 86-14, 1986
16. C.S. Coffey, V.F. DeVost and D.L. Woody, Towards Developing the Capability to Predict the Hazard Response of Energetic Materials Subjected to Impact, in Proceedings of the 9th Symposium on Detonation, 1989.

REFERENCES (Cont.)

17. W. Schroder and D. A. Webster, J. Appl. Mech., 16, 289, 1949.

18. F.P. Bowden and A.D. Yoffe, Fast Reactions in Solids, Academic Press, London, England, 1958.

19. C.S. Coffey and S.J. Jacobs, J. Applied Physics, 52, 1981, pp 6991-6993.

20. C. S. Coffey, M. J. Frankel, T. P. Liddiard, and S. J. Jacobs, in Proceedings of the 7th Symposium on Detonation, Jun 1981, NSWC MP 82-334, 1982.

21. R. Hill, The Mathematical Theory of Plasticity, Oxford University Press, p. 215, 1956.

22. J. Sharma and B.C. Beard, "Fundamentals of X-Ray Photoelectron Spectroscopy (XPS) and Its Applications to Explosives and Propellants," in Chemistry and Physics of Energetic Materials, Ed. S.N. Bulusu, NATO ASI Series C, Kluwer Academic Publishers, Boston, 1990, Vol. 309, p. 569.

23. C. S. Coffey, V. F. DeVost and D. L. Woody, "The Ballistic Impact Chamber (BIC) Test," in Proceedings of the JANNAF Hazards Mtg., Mar 1988.

24. C.S. Coffey, "On The Fluctuations in the Initiation and Growth of Reactions in Explosives and Propellants During Shock or Impact," (to be submitted to J. of Explosives, Propellants and Pyrotechnics, 1991).

APPENDIX A

ANALYSIS OF THE EXPLOSIVE RESEARCHLABORATORY/ NSWCDD IMPACT MACHINES

The Explosive Research Laboratory (ERL) Impact Machine has been used in the United States in various modified forms since the early 1940's. The machine was designed at the ERL, and the original design has changed very little over the years.[A-1] The machine described in reference A-1 is the current version.

The principal components of the machine consist of interchangeable drop weights of 2.5 and 5 kgs, a 535 gm striker, a 500 gm anvil, and a massive base of approximately 500 kg. The striker and the anvil are nearly identical columns, both 3.2 cm in diameter. The striker is 9 cm long and has a slightly rounded top. The anvil is 7.6 cm long and is rigidly attached to the base mass.

In impact tests, the explosive sample is placed between the striker and the anvil. A complete description of the response of an explosive or propellant sample to impact is well beyond our present analytical capabilities, and certainly far beyond the predictive capabilities of any computer code. However, much can be learned by examining the response of the impact machine when no sample is present. This is the "bare tools" case.

The duration of the "bare tools" impact is approximately 350 to 400 us. The time required for a disturbance to travel the diameter and length of the striker and anvil column is approximately 6 and 20 μs, respectively, where the speed of sound in steel is taken as 5 x 10 m/s. These transients have a duration of at least one order of magnitude shorter than that of the duration of the "bare tools" impact. Therefore, it can be assumed that the drop weight, striker, and anvil can be treated as lumped mass-spring elements and that, during the compressive phase of the impact, these elements remain in contact with each other. Only in tension do the striker, anvil and drop weight separate. This occurs only during rebound when the motion of the components are no longer of interest.

The upper surface of the striker is rounded to lessen the alignment problem with the impacting drop weight. The presence of this curved surface results in the additional complication of a Hertzian impact. Here, for simplicity, the effect of the curved surface will be neglected on the basis that it makes only a minor contribution to the overall response of the drop weight-striker/anvil system.

A schematic diagram detailing the lumped components of the impact machine is shown in Figure A-1. The mass and spring constant of the impactor are M_1 and K_1, respectively. Similarly, M_2, K_2 and M_3, K_3 are the mass and spring constants of the

striker/anvil and base mass, respectively. The equations of motion of this coupled system are

$$M_1 X_1 = -K_1 (X_1 - X_2 - X_3) \tag{A-1}$$

$$M_2 X_2 = -K_2 (X_2 - X_3) + K_1 (X_1 - X_2 - X_3) \tag{A-2}$$

$$M_3 X_3 = -K_3 X_3 + K_2 (X_2 - X_3) \tag{A-3}$$

where

$$X_1 = \ell_1 (t) - \ell_1 (0)$$

$$X_2 = \ell_2 (t) - \ell_2 (0)$$

$$X_3 = \ell_3 (t) - \ell_3 (0)$$

The mass of the base is so large compared to the other masses involved that it can safely be taken as infinite, leading to the simplification that

$$X_3 = 0 \tag{A-4}$$

and

$$X_{33} = \frac{k_2}{k_2 + k_3} X_2 \tag{A-5}$$

For a steel cylinder, the spring constant is given as K = EA/L, where E is the elastic modulus, A is the cross sectional area, and L is the length of the column. For the large base system, $K_3 \gg K_2$, so that $X_3 = 0$. This allows considerable simplification of the equations of motion which now become

$$M_1 X_1 = -K_1 (X_1 - X_2) \tag{A-1a}$$

$$M_2 X_2 = -K_2 X_2 + K_1 (X_1 - X_2). \tag{A-2a}$$

It is convenient to solve these by Laplace Transforms since the impact starts at time $t = 0$. Equations (A-1a) and (A-2a) transform as

$$M_1 P^2 X_1 - M_1 [P X_1 (0) + X_1 (0)] = -K_1 (X_1 - X_2) \tag{A-6}$$

$$M_2 P^2 X_2 - M_2 [P X_2 (0) + X_2 (0)] = -K_2 X_2 + K_1 (X_1 - X_2), \tag{A-7}$$

where the over head bars denote the transformed quantity. The appropriate initial conditions are $x_1(0) = x_2(0) = 0$ and $x_2(0) = 0$ since the system initially is not under strain nor is the striker moving. The initial velocity of the drop weight released from a height h is $x_1(0) = (2gh)^{\frac{1}{2}}$. Solving equation 6 for x_1 gives

$$X_1 = \frac{1}{P^2 + \omega_1{}^2} \left[X_1 (0) + \omega_1{}^2 X_2 \right] \tag{A-8}$$

Combining (7) and (8) gives

$$X_2 = \frac{\frac{K_1}{M_2} X_1 (0)}{(P^2 + \Gamma^2)(P^2)(P^2 + \beta^2)} \tag{A-9}$$

where $\omega_1{}^2 = K_1 / M_1$, and

$$\Gamma^2 = \frac{\omega_1^2 + \omega_{12}^2}{2} + \frac{1}{2} \left(1 + 4 \frac{M_1}{M_2}\right) \omega_1^4 - 2\omega_1^2 \omega_{12}^2 + \omega_{12}^4, \tag{A-10}$$

and

$$\beta^2 = \frac{\omega_1^2 + \omega_{12}^2}{2} + \frac{1}{2} \left(1 + 4 \frac{M_1}{M_2}\right) \omega_1^4 - 2\omega_1^2 \omega_{12}^2 + \omega_{12}^4, \tag{A-11}$$

$$\omega_{12}^2 = \frac{K_1 + K_2}{M_2}. \tag{A-12}$$

Equation 9 can be recast by partial fractions as

$$X_2 = -i \frac{K_1}{2M_2} X_1 \omega (0) \left[\frac{1}{\Gamma^2 - \beta^2} \right] \left[\frac{1}{\Gamma (P + i\Gamma)} - \frac{1}{\Gamma (P - i\Gamma)} - \frac{1}{\beta (P + i\beta)} + \frac{1}{\beta (P - i\beta)} \right] \tag{A-13}$$

Taking the inverse Laplace Transformation of Equation (A-13) gives the incremental change in length of the striker as

$$X_2(t) = -\frac{K_1}{M_2} X_1(0)\left[\frac{1}{\Gamma^2 - \beta^2}\right]\left[\frac{1}{\beta}\sin\beta t - \frac{1}{\Gamma}\sin\Gamma t\right] \tag{A-14}$$

The force that the striker exerts on the base anvil is $F_2(t) = K_2X_2(t)$. For the original ERL-designed impact machine, $M_2 \ll M_1$ and $K_2 \gg K_1$ so that $\beta \approx \omega_1$, $\simeq \Gamma \simeq \omega_{12}$ and $\omega_{12} \gg \omega_1$. In this limit, the force on the sample is approximately

$$F_2(t) \approx \frac{K_1K_2}{K_1K_2} X_1(0)\left[\frac{1}{\omega_1}\sin\omega_1 t - \frac{1}{\omega_{12}}\sin\omega_{12} t\right]$$

$$\approx \frac{K_1X_1(0)}{\omega_1}\sin\omega_1 t. \tag{A-15}$$

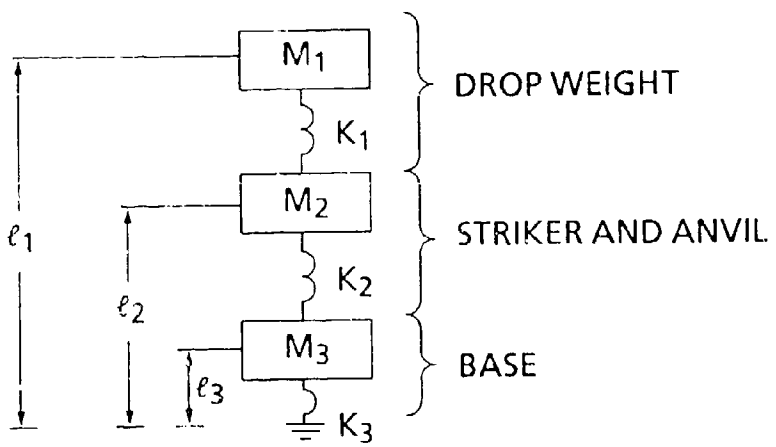

FIGURE A-1. LUMPED MASS-SPRING ELEMENTS OF SIMPLIFIED IMPACT MACHINE

DISTRIBUTION

		Copies
ATTN	ONR 1132P (R MILLER)	1
	ONT 20T (L V SCHMIDT)	1
	ONT 213 (D SIEGEL)	1
	ONT 23 (A J FAULSTICH)	1
	ONT 232 (D HOUSER)	1

CHIEF OF NAVAL RESEARCH
800 N QUINCY STREET ECT 1
ARLINGTON VA 22217-5000

ATTN R SIEWART 1
OUSDRE/R&AT MST
THE PENTAGON
WASHINGTON DC 20301

ATTN D ANDERSON 1
OUSDRE/TWP-NW&M
THE PENTAGON
WASHINGTON DC 20301

OUSDRE/TWP--OM
ATTN C KOPCSAK 1
THE PENTAGON
WASHINGTON DC 20301

ATTN P MENT 1
USD(A)/DDR&E (R/AT/ET)
STAFF SPECIALIST FOR WEAPONS
TECHNOLOGY
THE PENTAGON
WASHINGTON DC 20301

ATTN	SURFACE WARFARE	1
	AIR WARFARE	1
	SUBS/ASW	1

OASN/RE&S
NAVY DEPARTMENT
WASHINGTON DC 20301

		Copies
ATTN	6-A-145	1
	DDESB-KT	1
	J WARD	25

CHAIRMAN
DEPARTMENT OF DEFENSE EXPLOSIVES
SAFETY BOARD
HOFFMAN BUILDING 1
2461 EISENHOWER AVENUE
ALEXANDRIA VA 22331

ATTN	OP-098	1
	OP-981	1
	OP-982	1
	OP-983	1
	OP-987	1
	OP-02T	1
	OP-22	1
	OP-225	1
	OP-32	1
	OP-35	1
	OP-37	1
	OP-374	1
	OP-501	1
	OP-502	1
	OP-503	1
	OP-72	1
	OP-74	1
	OP-75	1

CHIEF OF NAVAL OPERATIONS
NAVY DEPARTMENT
WASHINGTON DC 20350

ATTN SPAWAR-05 1
COMMANDER
SPACE AND NAVAL WARFARE SYSTEMS
COMMAND
WASHINGTON DC 20363-5100

DISTRIBUTION (Cont.)

		Copies
ATTN	SEA-05R	1
	SEA-55	1
	SEA-55X	1
	SEA-55X1	1
	SEA-55X2	1
	SEA-55Y	1
	SEA-66U	1
	SEA-62	1
	SEA-62Y	1
	SEA-62Z	1
	SEA-63	1
	SEA-63D	1
	PMS-402	1
	PMS-406	1
	PMS-407	1

COMMANDER
NAVAL SEA SYSTEMS COMMAND
WASHINGTON DC 20362-5105

ATTN	AIR-5004	1
	AIR-51623	1
	AIR-540	1
	AIR-5404	1
	AIR-93	1
	AIR-932F	1
	AIR-932H	1
	AIR-932K	1
	AIR-932T	1
	PMA-242	1
TECHNICAL LIBRARY		1

COMMANDER
NAVAL AIR SYSTEMS COMMAND
WASHINGTON DC 20361

ATTN	TECHNICAL LIBRARY	1
	CODE 17	1
	CODE 172	1
	CODE 1740.3 (R GARRISON)	1
	CODE 1740.4 (S WANG)	1
	CODE 175 (W SYKES)	1
	CODE 1750.2 (W CONLEY)	1
	CODE 1740.2 (F FISCH)	1

COMMANDER
DAVID TAYLOR RESEARCH CENTER
BETHESDA MD 20084

		Copies
ATTN	CODE 177	1
	TECHNICAL LIBRARY	1

COMMANDER
DAVID TAYLOR RESEARCH CENTER
PORTSMOUTH VA 20375

ATTN	TECHNICAL LIBRARY	1

COMMANDING OFFICER
NAVAL RESEARCH LABORATORY
WASHINGTON DC 20375

ATTN	TECHNICAL LIBRARY	1

COMMANDING OFFICER
NAVAL SURFACE WARFARE CENTER
DAHLGREN DIVISION
COASTAL SYSTEMS STATION
PANAMA CITY FL 32407-5000

ATTN	TECHNICAL LIBRARY	1

COMMANDER
NAVAL UNDERSEA WARFARE CENTER
DIVISION
NEWPORT RI 02841-5047

ATTN	CODE 3917	1
	CODE 38 (R DERR)	1
	CODE 389 (T BOGGS)	1
	CODE 32	1
	CODE 3205	1
	CODE 3205I (S DEMAY)	1
	CODE 3208	1
	CODE 3211	1
	CODE 326	1
	CODE 3261	1
	CODE 3263	1
	CODE 3264	1
	CODE 3265 (J PAKULAK)	1
	CODE 3266	1
	CODE 327	1
	CODE 381	1
	CODE 385	1
	CODE 3850	1
	CODE 3853	1
	CODE 3891 (J COVINO)	1
	CODE 39	1
	TECHNICAL LIBRARY	1

COMMANDER
NAVAL AIR WARFARE CENTER
WEAPONS DIVISION
CHINA LAKE CA 93555-6001

DISTRIBUTION (Cont.)

	Copies
ATTN CODE 2730D	1
TECHNICAL LIBRARY	1
J CHANG	1
P DENDOR	1
L NEWMAN	1
G. NAUFLETT	1
COMMANDER NAVAL SURFACE WARFARE CENTER INDIAN HEAD DIVISION INDIAN HEAD MD 20640-5000	
ATTN TECHNICAL LIBRARY	1
COMMANDER CENTER FOR NAVAL ANALYSES 2000 SUITLAND ROAD WASHINGTON DC 20390-5140	
ATTN LIBRARY	1
SUPERINTENDENT NAVAL POSTGRADUATE SCHOOL MONTEREY CA 93940	
ATTN TECHNICAL LIBRARY	1
PRESIDENT NAVAL WAR COLLEGE NEWPORT RI 02841	
ATTN RDT OFFICER	1
SEAL TEAM	1
UNDERWATER DEMOLITION TEAM	1
COMMANDING OFFICER NAVAL AMPHIBIOUS BASE CORONADO SAN DIEGO CA 92155	
ATTN RDT OFFICER	1
COMMANDING OFFICER NAVAL AMPHIBIOUS BASE LITTLE CREEK NORFOLK VA 23511	
ATTN TECHNICAL LIBRARY	1
COMMANDING OFFICER NAVAL EXPLOSIVE ORDNANCE DISPOSAL TECHNOLOGY CENTER INDIAN HEAD MD 20640	

	Copies
ATTN CODE 2145	1
COMMANDER PACIFIC MISSILE TEST CENTER POINT MUGU CA 93042	
COMMANDING OFFICER SEAL TEAM 2 FPO NEW YORK NY 09501-4633	1
COMMANDER NAVAL UNDERSEA WARFARE DIVISION KEYPORT WA 98345-0580	1
COMMANDER NAVAL SURFACE WARFARE CENTER PORT HUENEME DIVISION PORT HUENEME CA 93043-5007	1
COMMANDER NAVAL WEAPONS EVALUATION FACILITY KIRTLAND AIR FORCE BASE ALBUQUERQUE NM 87117	1
ATTN CODE 3031 (E NEAL)	1
CODE 50D (A NORRIS)	1
CODE 505 (J E SHORT)	1
CODE 90 (A E WHITNER)	1
COMMANDER NAVAL SURFACE WARFARE CENTER CRANE DIVISION CRANE IN 47522-5000	
ATTN CODE 321 (M BUCHER)	1
COMMANDING OFFICER NAVAL WEAPONS STATION CONCORD CA 94520-5000	
ATTN CODE 470A	1
LIBRARY	1
OFFICER IN CHARGE NAVAL SURFACE WARFARE CENTER INDIAN HEAD DIVISION YORKTOWN DETACHMENT YORKTOWN VA 23691-5110	

DISTRIBUTION (Cont.)

	Copies
ATTN TECHNICAL LIBRARY DIRECTOR DEFENSE NUCLEAR AGENCY WASHINGTON DC 20305	1
ATTN C FOWLER DEFENSE SCIENCE BOARD THE PENTAGON WASHINGTON DC 20301	1
ATTN LIBRARY DIRECTOR DEFENSE RESEARCH AND ENGINEERING WASHINGTON DC 20305	1
ATTN LIBRARY DIRECTOR DEFENSE ADVANCED RESEARCH PROJECTS AGENCY 1400 WILSON BLVD ARLINGTON VA 22209	1
ATTN TECHNICAL LIBRARY INSTITUTE FOR DEFENSE ANALYSES 1801 N BEAUREGARD STREET ALEXANDRIA VA 22311	1
ATTN LIBRARY COMMANDING GENERAL MARINE CORPS DEVELOPMENT AND EDUCATION COMMAND MARINE CORPS LANDING FORCE DEVELOPMENT CENTER QUANTICO VA 22134	1
ATTN DRSAR-IRC DRSAR-LEM (R FREEMAN) DRSAR-SF (R YOUNG) ARMY ARMAMENT MUNITIONS AND CHEMICAL COMMAND ROCK ISLAND IL 61299-6000	1 1 1
ATTN TECHNICAL LIBRARY ARMY ARMAMENT RESEARCH AND DEVELOPMENT COMMAND DOVER NJ 07801	1
ATTN SMCAR-AEE-WW (PAI LU) US ARMY RESEARCH, DEVELOPMENT, AND ENGINEERING CENTER PICATINNY ARSENAL, NJ 07806	1
ATTN CHIEF DOCUMENTS D DREITZLER REDSTONE ARSENAL ARMY MISSILE COMMAND REDSTONE ARSENAL AL 35809	1 1
ATTN SLC-BR-TB-EE SLCRBR-IB-I (P KASTE) V BOYLE O BLAKE R FREY G MELANI M CHAWLA R FREY J TRIMBLE TECHNICAL LIBRARY ARMY BALLISTIC RESEARCH LABORATORY ABERDEEN PROVING GROUND ABERDEEN MD 21005-5066	1 1 1 1 1 1 1 1 1 1
ATTN LIBRARY COMMANDER OFFICER HARRY DIAMOND LABORATORY 2800 POWDER MILL ROAD ADELPHI MD 20783	1
ATTN HSHB-EA-A ARMY ENVIRONMENTAL HYGIENE AGENCY ABERDEEN PROVING GROUND ABERDEEN MD 21005	1
ATTN J BARKELEY ARMY MEDICAL BIOENGINEERING RESEARCH AND DEVELOPMENT LABORATORY FORT DIETRICK MD 21701	1
ATTN G R HUSK COMMANDER ARMY RESEARCH OFFICE P. O. BOX 12211 RESEARCH TRIANGLE PARK NC 27709-2211	1
ATTN DRXTH-TE-D ARMY TOXIC AND HAZARDOUS MATERIALS AGENCY ABERDEEN PROVING GROUND ABERDEEN MD 21005	1

DISTRIBUTION (Cont.)

	Copies
ATTN SMCCR-DDP	1
COMMANDER	
ARMY CHEMICAL RESEARCH DEVELOPMENT AND ENGINEERING CENTER	
ABERDEEN PROVING GROUND MD 21010-5423	
ATTN WL/MNME	1
WL/MNMW	1
WL/MNOI	1
WL/MNME (G GLENN)	1
WL/MNMF (R MABREY)	1
WL/MNME (R MCKINNEY)	1
WL/MNMW (J FOSTER)	1
AIR FORCE ARMAMENT DIVISION	
EGLIN AIR FORCE BASE FL 32542-6009	
ATTN T MATUSKO	1
AIR FORCE OFFICE OF SCIENTIFIC RESEARCH	
BOLLING AIR FORCE BASE	
WASHINGTON DC 20332	
ATTN TECHNICAL LIBRARY	1
M FINGER	1
C M TARVER	1
E LEE	1
P URTIEW	1
J D HALLQUIST	1
L M ERICKSON	1
E JAMES	1
UNIVERSITY OF CALIFORNIA	
LAWRENCE LIVERMORE NATIONAL LABORATORY	
P. O. BOX 808	
LIVERMORE CA 94550	
ATTN J. REPA	1
M. J. URIZAR	1
S. W. PETERSON	1
L. SMITH	1
C. FOREST	1
C. MORRIS	1
A. W. CAMPBELL	1
R. ENGELKE	1
P. C. CRAWFORD	1
LOS ALAMOS NATIONAL LABORATORY	
LOS ALAMOS NM 87545	

	Copies
ATTN TECHNICAL LIBRARY	1
SANDIA NATIONAL LABORATORIES	
P. O. BOX 969	
LIVERMORE CA 94550-0096	
ATTN STRUCTURAL AND SHOCK CHEMISTRY DIVISION 1153 (MARK U ANDERSON)	1
SANDIA NATIONAL LABORATORIES	
ALBUQUERQUE NM 87185-5800	
ATTN RECORDS CONTROL FOR	
RICHARD ANDERSON	1
TECHNICAL LIBRARY	1
ARGONNE NATIONAL LABORATORY	
9700 SOUTH CASS AVENUE	
ARGONNE IL 60439	
ATTN T W CHRISTIAN	1
THE JOHNS HOPKINS UNIVERSITY	
APPLIED PHYSICS LABORATORY	
CHEMICAL PROPULSION INFORMATION AGENCY	
JOHNS HOPKINS ROAD	
LAUREL MD 20707	
ATTN TECHNICAL LIBRARY	1
THE JOHNS HOPKINS UNIVERSITY	
APPLIED PHYSICS LABORATORY	
JOHNS HOPKINS ROAD	
LAUREL MD 20707	
ATTN CODE TERA (J JOYNER)	1
TECHNICAL LIBRARY	1
NEW MEXICO INSTITUTE OF MINING TECHNOLOGY	
SOCORRO NM 87801	
ATTN LIBRARY	1
E LIZKA	1
APPLIED RESEARCH LABORATORY	
PENNSYLVANIA STATE UNIVERSITY	
P. O. BOX 30	
UNIVERSITY PARK	
STATE COLLEGE PA 16801	

DISTRIBUTION (Cont.)

	Copies
DEFENSE TECHNICAL INFORMATION CENTER CAMERON STATION ALEXANDRIA VA 22304-6142	12
ATTN LIBRARY	1
B HAMMANT	1
P HART	1
P HASKINS	1
ROYAL ARMAMENT RESEARCH AND DEVELOPMENT ESTABLISHMENT FORT HALSTEAD SEVENOAKS KENT UNITED KINGDOM	
ATTN LIBRARY	1
H R JAMES	1
ATOMIC WEAPONS ESTABLISHMENT FOULNESS ISLAND ESSEX SS3 9XE UNITED KINGDOM	
ATTN LIBRARY	1
P LEE	1
R H MARTIN	1
ROYAL ORDNANCE PLC WESTCOTT AYLESBURY BUCKINGHAMSHIRE HP18 ONZ UNITED KINGDOM	
ATTN P JONES	1
THE BRITISH EMBASSY BRITISH DEFENCE STAFF 3100 MASSACHUSETTS AVENUE NW WASHINGTON DC 20008	
ATTN M CHICK	1
MATERIALS RESEARCH LABORATORY P O BOX 50 ASCOT VALE VICTORIA 3032 AUSTRALIA	
ATTN V. F. DEVOST	3
S JACOBS	1
W PICKLER	1
T P LIDDIARD	1
J W WATT	1
ADVANCED TECHNOLOGY AND RESEARCH INC LAUREL TECHNOLOGY CENTER 14900 SWEITZER LANE LAUREL MD 20707	

	Copies
ATTN R CHURCH	1
TRW SAN BERNADINO CA 92401	
ATTN G CHIN	1
AEROJET ORDNANCE AND MANUFACTURING COMPANY 9236 EAST HALL ROAD DOWNEY CA 90241	
ATTN A MELLOR	1
VANDERBILT UNIVERSITY NASHVILLE TN 37235	
ATTN R HODGES	1
J SMITH	1
LOCKHEED MISSILES AND SPACE COMPANY P O BOX 504 SUNNYVALE CA 94086	
ATTN G WILLIAMS	1
HERCULES INCORPORATED ROCKET CENTER P O BOX 210 ROCKET CENTER WV 26726	
ATTN M KLAKKEN	1
M BERGER	1
L LOSEE	1
T SPEED	1
HERCULES BACCHUS WORKS MAGNA UT 84044-0098	
ATTN D JEFF JONES MATERIALS AND PROCESS DEVELOPMENT	1
THIOKOL CORPORATION TACTICAL OPERATIONS HUNTSVILLE DIVISION P. O. BOX 400006 HUNTSVILLE AL 35815-1506	
ATTN LARRY LEE	1
KTECH CORPORATION 901 PENNSYLVANIA AVENUE ALBUQUERQUE NM 87110	

DISTRIBUTION (Cont.)

		Copies
ATTN	K L CHRISTIANSON	
	J L HOULTON	1
	G JOHNSON	1
ALLIANT TECHSYSTEMS INC		
7225 NORTHLAND DRIVE		
BROOKLYN PARK MN 55428		
ATTN	GIFT AND EXCHANGE DIVISION	1
LIBRARY OF CONGRESS		
WASHINGTON DC 20540		
INTERNAL DISTRIBUTION		
E231		2
E232		3
E342		1
G13	(D L DICKINSON)	1
G13	(T WASMOND)	1
G22	(W H HOLT)	1
	(W MOCK)	1
	(S S WAGGENER)	1
R10		1
R101		1
R10	(R R BERNECKER)	1
R10A	(C DICKINSON)	1
R10A1		1
R10A2		1
R10B	(H S HAISS)	1
R11		1
R11	(A. DUONG)	1
	(C. GOTZMER)	1
	(N. JOHNSON)	1
	(Y. TRAN)	1
	(J. LEAHY)	1
	(J. KELLEY)	1
R12		1
R12	(B A BAUDLER)	1
	(B C GLANCY)	1
	(L C HUDSON)	1
	(G LAIB)	1
	(L L MENSI)	1
	(L J MONTESI)	1
	(P F SPAHN)	1
	(T SPIVAK)	1

		Copies
INTERNAL DISTRIBUTION (Cont)		
R13		1
R13	(K D ASHWELL)	1
	(R N BAKER)	1
	(R D BARDO)	1
	(A BROWN)	1
	(C S COFFEY)	6
	(J DAVIS)	1
	(D L DEMSKE)	1
	(J W FORBES)	1
	(R H GUIRGUIS)	1
	(P K GUSTAVSON)	1
	(R N HAY)	1
	(H D JONES)	1
	(K KIM)	1
	(R J LEE)	1
	(W W LEE)	1
	(E R LEMAR)	1
	(P J MILLER)	1
	(C T RICHMOND)	1
	(H W SANDUSKY)	1
	(G T SUTHERLAND)	1
	(D G TASKER)	1
	(W H WILSON)	1
	(D L WOODY)	1
	(F J ZERILLI)	1
R14		1
R14	(J W KOENIG)	1
R15		1
R15	(S COLLIGNON)	1
R42	(R DEWITT)	1
U10	(W WASSMANN)	1
U11	(R PLENGE)	1
	(D HINELY)	1
U12	(C SMITH)	1
	(W HINCKLEY)	1
U32	(G PARRENT)	1
U43	(L LIPTON)	1

REPORT DOCUMENTATION PAGE

Form Approved
OMB No. 0704-0188

Public reporting burden for this collection of information is estimated to average 1 hour per response, including the time for reviewing instructions, searching existing data sources, gathering and maintaining the data needed, and completing and reviewing the collection of information. Send comments regarding this burden estimate or any other aspect of this collection of information, including suggestions for reducing this burden, to Washington Headquarters Services, Directorate for Information Operations and Reports, 1215 Jefferson Davis Highway, Suite 1204, Arlington, VA 22202-4302, and to the Office of Management and Budget, Paperwork Reduction Project (0704-0188), Washington, DC 20503

1. AGENCY USE ONLY *(Leave blank)*

2. REPORT DATE
June 1992

3. REPORT TYPE AND DATES COVERED

4. TITLE AND SUBTITLE
Impact Testing of Explosives and Propellants

5. FUNDING NUMBERS

6. AUTHOR(S)
Dr. Charles S. Coffey (NSWCDD) and V. F. DeVost (ATR, Inc.)

7. PERFORMING ORGANIZATION NAME(S) AND ADDRESS(ES)
Naval Surface Warfare Center Dahlgren Division
White Oak Detachment
10901 New Hampshire Avenue
Silver Spring, Maryland 20903-5000

8. PERFORMING ORGANIZATION REPORT NUMBER
NSWCDD/TR-92/280

9. SPONSORING/MONITORING AGENCY NAME(S) AND ADDRESS(ES)

10. SPONSORING/MONITORING AGENCY REPORT NUMBER

11. SUPPLEMENTARY NOTES

12a. DISTRIBUTION/AVAILABILITY STATEMENT
Approved for public release; distribution is unlimited.

12b. DISTRIBUTION CODE

13. ABSTRACT *(Maximum 200 words)*

The drop weight impact test is the simplest and easiest test that can be performed on small quantities of explosives or propellants, and yet it has only a minimal role in assessing explosive sensitivity or performance. This report examines the drop weight impact test as it is currently used, describes its major flaw, and suggests an alternative test that holds the promise of providing the impact energy required to ignite an energetic material. Other impact tests are described. One of these, the Ballistic Impact Chamber Test, measures the rate of reaction and extent of reaction during impact. This test demonstrates that during impact there are two forms of initiation reactions that occur: one that is very fast and is likely due to direct impact-shear initiation of the crystalline solids in the sample and, the other, a much slower component, is thought to arise due to burning of the sample.

14. SUBJECT TERMS

Explosives	Drop Weight Impact Test
Propellants	Ballistic Impact Chamber Test
Explosives Sensitivity	Initiation Reactions

15. NUMBER OF PAGES
38

16. PRICE CODE

17. SECURITY CLASSIFICATION OF REPORT	18. SECURITY CLASSIFICATION OF THIS PAGE	19. SECURITY CLASSIFICATION OF ABSTRACT	20. LIMITATION OF ABSTRACT
UNCLASSIFIED	UNCLASSIFIED	UNCLASSIFIED	SAR

GENERAL INSTRUCTIONS FOR COMPLETING SF 298

The Report Documentation Page (RDP) is used in announcing and cataloging reports. It is important that this information be consistent with the rest of the report, particularly the cover and its title page. Instructions for filling in each block of the form follow. It is important to ***stay within the lines*** to meet ***optical scanning requirements***.

Block 1. Agency Use Only *(Leave blank)*.

Block 2. Report Date. Full publication date including day, month, and year, if available (e.g. 1 Jan 88). Must cite at least the year.

Block 3. Type of Report and Dates Covered. State whether report is interim, final, etc. If applicable, enter inclusive report dates (e.g. 10 Jun 87 - 30 Jun 88).

Block 4. Title and Subtitle. A title is taken from the part of the report that provides the most meaningful and complete information. When a report is prepared in more than one volume, repeat the primary title, add volume number, and include subtitle for the specific volume. On classified documents enter the title classification in parentheses.

Block 5. Funding Numbers To include contract and grant numbers; may include program element number(s), project number(s), task number(s), and work unit number(s) Use the following labels:

C	- Contract	PR	- Project
G	- Grant	TA	- Task
PE	- Program Element	WU	- Work Unit Accession No

BLOCK 6. Author(s). Name(s) of person(s) responsible for writing the report, performing the research, or credited with the content of the report. If editor or compiler, this should follow the name(s).

Block 7. Performing Organization Name(s) and Address(es). Self-explanatory.

Block 8. Performing Organization Report Number. Enter the unique alphanumeric report number(s) assigned by the organization performing the report.

Block 9. Sponsoring/Monitoring Agency Name(s) and Address(es). Self-explanatory.

Block 10. Sponsoring/Monitoring Agency Report Number. *(If Known)*

Block 11. Supplementary Notes. Enter information not included elsewhere such as: Prepared in cooperation with. ; Trans. of...; To be published in.... When a report is revised, include a statement whether the new report supersedes or supplements the older report

Block 12a. Distribution/Availability Statement. Denotes public availability or limitations. Cite any availability to the public. Enter additional limitations or special markings in all capitals (e.g. NOFORN, REL, ITAR).

- **DOD** - See DoDD 5230.24, "Distribution Statements on Technical Documents."
- **DOE** - See authorities.
- **NASA** - See Handbook NHB 2200.2
- **NTIS** - Leave blank.

Block 12b. Distribution Code.

- **DOD** - Leave blank.
- **DOE** - Enter DOE distribution categories from the Standard Distribution for Unclassified Scientific and Technical Reports.
- **NASA** - Leave blank
- **NTIS** - Leave blank.

Block 13. Abstract. Include a brief ***(Maximum 200 words)*** factual summary of the most significant information contained in the report.

Block 14. Subject Terms. Keywords or phrases identifying major subjects in the report.

Block 15. Number of Pages. Enter the total number of pages.

Block 16. Price Code. Enter appropriate price code ***(NTIS only)***

Blocks 17.-19. Security Classifications. Self-explanatory. Enter U.S. Security Classification in accordance with U.S. Security Regulations (i.e., UNCLASSIFIED). If form contains classified information, stamp classification on the top and bottom of the page.

Block 20. Limitation of Abstract. This block must be completed to assign a limitation to the abstract. Enter either UL (unlimited) or SAR (same as report) An entry in this block is necessary if the abstract is to be limited. If blank, the abstract is assumed to be unlimited.