AD-A250 661

WRDC-TR-89-3030
Volume IV

DESIGN DEVELOPMENT AND DURABILITY VALIDATION OF POSTBUCKLED COMPOSITE AND METAL PANELS

VOLUME IV - DESIGN GUIDE UPDATE

R. B. DEO
H. P. KAN
J. A. HANGEN

Northrop Corporation
Aircraft Division
One Northrop Avenue
Hawthorne, California 90250

DTIC
ELECTE
MAY 21 1992
S B D

NOVEMBER 1989

Final Report for Period September 1984 to April 1989

Approved for Public Release, Distribution Unlimited

FLIGHT DYNAMICS LABORATORY
WRIGHT RESEARCH AND DEVELOPMENT CENTER
AIR FORCE SYSTEMS COMMAND
WRIGHT-PATTERSON AIR FORCE BASE, OHIO 45433-6553

92-13457

92 5 20 014

NOTICE

When Government drawings, specifications, or other data are used for any purpose other than in connection with a definitely Government-related procurement, the United States Government incurs no responsibility or any obligation whatsoever. The fact that the government may have formulated or in any way supplied the said drawings, specifications, or other data, is not to be regarded by implication, or otherwise in any manner construed, as licensing the holder, or any other person or corporation; or as conveying any rights or permission to manufacture, use, or sell any patented invention that may in any way be related thereto.

This report is releasable to the National Technical Information Service (NTIS). At NTIS, it will be available to the general public, including foreign nations.

This technical report has been reviewed and is approved for publication.

GEORGE P. SENDECKYJ, Aero Engr
Fatigue, Fracture & Reliability Gp
Structural Integrity Branch

CAPT HOWARD J. STORR, JR., USAF, Tech Mgr
Fatigue, Fracture & Reliability Gp
Structural Integrity Branch

FOR THE COMMANDER

JAMES L. RUDD
Chief, Structural Integrity Branch
Structures Division

If your address has changed, if you wish to be removed from our mailing list, or if the addressee is no longer employed by your organization please notify WRDC/FIBEC, WPAFB, OH 45433-6553 to help us maintain a current mailing list.

Copies of this report should not be returned unless return is required by security considerations, contractual obligations, or notice on a specific document.

UNCLASSIFIED

SECURITY CLASSIFICATION OF THIS PAGE

REPORT DOCUMENTATION PAGE

Form Approved OMB No. 0704-0188

1a. REPORT SECURITY CLASSIFICATION UNCLASSIFIED	1b. RESTRICTIVE MARKINGS N/A
2a. SECURITY CLASSIFICATION AUTHORITY N/A	3. DISTRIBUTION/AVAILABILITY OF REPORT APPROVED FOR PUBLIC RELEASE; DISTRIBUTION UNLIMITED
2b. DECLASSIFICATION/DOWNGRADING SCHEDULE N/A	
4. PERFORMING ORGANIZATION REPORT NUMBER(S) NOR89-112	5. MONITORING ORGANIZATION REPORT NUMBER(S) WRDC-TR-89-3030, VOLUME IV
6a. NAME OF PERFORMING ORGANIZATION NORTHROP CORPORATION 6b. OFFICE SYMBOL (If applicable)	7a. NAME OF MONITORING ORGANIZATION FLIGHT DYNAMICS LABORATORY (WRDC/FIBE) WRIGHT RESEARCH AND DEVELOPMENT CENTER
6c. ADDRESS (City, State, and ZIP Code) HAWTHORNE, CA 90250-3277	7b. ADDRESS (City, State, and ZIP Code) WPAFB, OH 45433-6553
8a. NAME OF FUNDING/SPONSORING ORGANIZATION FLIGHT DYNAMICS LABORATORY 8b. OFFICE SYMBOL (If applicable) WRDC/FIBE	9. PROCUREMENT INSTRUMENT IDENTIFICATION NUMBER F33615-84-C-3220
8c. ADDRESS (City, State, and ZIP Code) WPAFB, OH 45433-6553	10. SOURCE OF FUNDING NUMBERS PROGRAM ELEMENT NO. 62201F; PROJECT NO. 2401; TASK NO 01; WORK UNIT ACCESSION NO 80

11. TITLE (Include Security Classification)
DESIGN DEVELOPMENT AND DURABILITY VALIDATION OF POSTBUCKLED COMPOSITE AND METAL PANELS. VOLUME IV - DESIGN GUIDE UPDATE

12. PERSONAL AUTHOR(S)
R. B. DEO, H. P. KAN, J. A. HANGEN

13a. TYPE OF REPORT	13b. TIME COVERED	14. DATE OF REPORT (Year, Month, Day)	15. PAGE COUNT
FINAL	FROM 9-84 TO 4-89	1989 NOVEMBER	62

16. SUPPLEMENTARY NOTATION

17. COSATI CODES		
FIELD	GROUP	SUB-GROUP
11	04	

18. SUBJECT TERMS (Continue on reverse if necessary and identify by block number)
BUCKLING, COMBINED LOADS, COMPOSITE PANELS, COMPRESSION, CURVED PANELS, DESIGN, DURABILITY, DAMAGE TOLERANCE, FATIGUE, IMPACT, METAL PANELS, POSTBUCKLING, REPAIR, SHEAR

19. ABSTRACT (Continue on reverse if necessary and identify by block number)

The objective of this program was to develop design procedures and durability validation methods for curved metal and composite panels designed to operate in the postbuckling range under the action of combined compression and shear loads. This research and technology effort was motivated by the need to develop design and life prediction methodologies for such structures.

The program has been organized in four tasks. In Task I, Technology Assessment, a complete review of the available test data was conducted to establish the strength, durability, and damage tolerance characteristics of postbuckled metal and composite panels and to identify data gaps that need to be filled. Task II, Data Base Development, was comprised of static and fatigue tests required to fill in the data gaps identified in Task I. New rigorous static analysis methods aimed at improving the accuracy of the existing semi-empirical analyses and life prediction techniques were developed in Task III. Task IV consisted

20. DISTRIBUTION/AVAILABILITY OF ABSTRACT ☒ UNCLASSIFIED/UNLIMITED ☐ SAME AS RPT ☐ DTIC USERS	21. ABSTRACT SECURITY CLASSIFICATION UNCLASSIFIED
22a. NAME OF RESPONSIBLE INDIVIDUAL GEORGE P. SENDECKYJ	22b. TELEPHONE (Include Area Code) (513) 255-6104 22c. OFFICE SYMBOL WRDC/FIBE

DD Form 1473, JUN 86 Previous editions are obsolete.

SECURITY CLASSIFICATION OF THIS PAGE

19. ABSTRACT (Continued)

of technology consolidation where the results of this program were incorporated in the Preliminary Design Guide developed under Contract F33615-81-C-3208 to provide a comprehensive design guide for postbuckled aircraft structures. The comprehensive design guide was also exercised in this task, on an actual aircraft fuselage section to illustrate the methodology and demonstrate weight and cost trade-offs.

This final report consists of the following five volumes:

Volume I - Executive Summary

Volume II - Test Results

Volume III - Analysis and Test Results

Volume IV - Design Guide Update

Volume V - Automated Data Systems Documentation

PREFACE

The work documented in this report was performed by Northrop Corporation, Aircraft Division, Hawthorne, California, under Contract F33615-84-C-3220 sponsored by the Air Force Wright Aeronautical Laboratories, Flight Dynamics Laboratory, WRDC/FIBE. The work was performed in the period from October 1984 through April 1989. The Air Force Program Monitor was Dr. G. P. Sendeckyj.

The following Northrop personnel contributed to the performance of the contract in their respective areas of responsibility:

Dr. H. P. Kan	Analysis Development
Dr. N. M. Bhatia	Testing and Data Correlation
C. M. Shah	Computer Code
J. A. Hangen	Example Problems
M. Kerbow	Testing
R. Cordero	Data Analysis/Graphics
R. Urias	Documentation

Accession For
NTIS GRA&I ☑
DTIC TAB ☐
Unannounced ☐
Justification
By
Distribution/
Availability Codes
Dist | Avail and/or Special
A-1

TABLE OF CONTENTS

SECTION		PAGE
1	INTRODUCTION	1
	1.1 Purpose, Scope and Organization	1
	1.2 General Characteristics of Postbuckled Panels	1
2	DESIGN METHODOLOGY	5
	2.1 Overview of Design Procedure	5
	2.2 Design Criteria	5
	2.3 Configuration Selection	7
	2.4 Preliminary Design	10
	2.5 Detail Design	20
3	EXAMPLES	29
	3.1 Curved Composite Panel	29
	3.2 Curved Metal Panel	36
	3.3 Design Demonstration	49
	REFERENCES	57

LIST OF ILLUSTRATIONS

FIGURE		PAGE
1.	Schematic of a Failure Envelope for Postbuckled Composite Panels Under Combined Compression and Shear Loading	4
2.	Design Procedure Flowchart for Postbuckled Metal and Composite Panels	6
3.	Compression Load Structural Efficiency Comparison for Hat-, J-, and Blade Configurations (Reference 6)	9
4.	Panel Design Variables	11
5.	Shear Buckling Coefficient for Simply Supported Curved Metal Panel. Curved Edge Shorter than Straight Edge	13
6.	Shear Buckling Coefficient for Simply Supported Curved Metal Panel. Curved Edge Longer than Straight Edge	13
7.	Shear Buckling Coefficient for Flat Panels	15
8.	Axial Compression Buckling Coefficients for Long Curved Plates (Reference 9)	17
9.	Skin Width b_w for Composite Panel Initial Buckling Strain Calculations	19
10.	Shear Buckling Load N^o_{xycr} Versus Stringer Spacing for $[\underline{45}_2/90/\underline{45}_2]$ and $[\underline{45}/0/90/0/\underline{45}]$ Skin Layups	21
11.	General Guidelines for Selecting Ply Distribution in Stiffeners Under Axial Compression	23
12.	Ply Drop-Offs in Hat Section Stiffener and Stiffener Design Variables	24
13.	Typical Stiffener Dimensions for Initial Sizing	25
14.	Program PBUKL Run for Example Problem	32
15.	Final Design of the Curved Composite Panel	37
16.	Initial Design of Curved Metal Panel	41
17.	Final Design of Curved Metal Panel	45

LIST OF ILLUSTRATIONS (Continued)

FIGURE		PAGE
18.	Location of the Iniboard Keel Beam in the Mach 2.5 Advanced Fighter	50
19.	Vertical Shear and Bending Moment Distribution Along Aft Fuselage Center Section	51
20.	In-Plane Internal Loads Obtained from NASTRAN Analysis	52
21.	Design Demonstration Example Analysis	53

SECTION 1
INTRODUCTION

1.1 PURPOSE, SCOPE AND ORGANIZATION

The purpose of the Design Guide is to document a step-by-step, easy to use design methodology for aircraft structures envisaged to operate in the postbuckled regime. The guide is directed principally at designers and structural engineers.

This second release of the Design guide covers static design and analysis methods for flat and curved panels loaded in uniaxial compression, shear or combined compression and shear loading. Stiffened panels made of composites as well as metals are addressed. The emphasis in this Guide is on illustrating the iterative design procedures based on simplified analytical tools and on demonstrating the use of the special purpose computer program PBUKL written to accomplish the design task. Analysis details are kept to a minimum since a more complete documentation of the predominantly semi-empirical analysis used in the program is given in Reference 1. The analytical expressions presented in the Guide are those that need to be used in addition to the program. Procedures for executing the computer program are documented in Reference 2. An attempt has been made to maintain commonality in the design approach for metal and composite panels. Differences in design considerations for the two material types, e.g., failure modes and the anisotropic nature of composites, are highlighted where appropriate.

1.2 GENERAL CHARACTERISTICS OF POSTBUCKLED PANELS

Stringer or longeron and frame stiffened panels are widely used in aircraft construction. In many of these stiffened panel applications, particularly for fuselage structures, significant efficiency gains can be realized if the skin or web between the stiffeners is permitted to buckle well below the design limit load. The efficiency advantage in such a design is a direct result of the ability to use thin skins and widely spaced stiffeners. The reduction in the number of stiffeners that results from a wider spacing also translates into lower manufacturing costs.

The load carrying capability of stiffened panels after skin buckling is due to the redistribution of a majority of the applied load into the discrete stiffeners and an effective width of skin, assuming that the skin is continuously connected to the stiffeners. By appropriate design of the stiffeners, therefore, the load carrying capacity of postbuckled panels can be enhanced to several times the skin initial buckling load assuming failure occurs by stiffener crippling.

The structural response of postbuckled stiffened panels depends on the nature of loading and the panel geometry, i.e., whether the panel is flat or curved. The postbuckling behavior of compression panels is characterized by the appearance of sinusoidal buckles in the skin between stiffeners accompanied by a simultaneous increase in the fraction of the total load resisted by the longitudinal stiffeners (stringers). After initial buckling, the applied compression load is carried by the stringers and a small effective width of the skin adjacent to the stringers. As the compression load is increased beyond the initial buckling load, the buckles in the skin become deeper and may also change in number. If the panels are made of metal, eventual failure can occur in several possible modes such as permanent set in the skin, stringer crippling, stringer yielding or Euler buckling of the panel as a whole. For fiber-reinforced composite panels where the common design practice is to cocure the stiffeners with the skin, panel failure can occur by stiffener skin disbonding, stringer crippling or Euler buckling of the entire panel.

The characteristic response of postbuckled panels under shear loading is nearly identical to that of partial tension field beams. At initial buckling, the skin in shear panels buckles into diagonal folds. The angle of these diagonal folds depends on the panel aspect ratio and curvature. After initial buckling, the applied shear load is resisted by axial loads induced in the stringers (chords) and the frames or rings (uprights), as a result of the diagonal tension in the buckled skin. The angle of the folds is determined by the direction of the diagonal tension component in the skin resulting from the applied shear. The possible failure modes in metal shear panels are permanent set in the skin, forced crippling of the stringers and/or

frames due to the axial compression load and the buckles in the skin, or stiffener yielding. In composite panels, failure can occur by skin rupture due to the diagonal tension stress, forced crippling of the stiffeners and rings, or by disbonding of the skin and the stiffeners. In addition, irrespective of the type of material used, excessive stiffener flexibility may lead to shear buckling of the panel as a whole.

At initial buckling under combined uniaxial compression and shear loading, the skin buckles into a combination of diagonal folds and sinusoidal buckles along the compression axis. The resulting buckle pattern is a set of diagonal folds that are square at the diagonal ends and are at a shallower angle than the diagonal folds produced by pure shear loading. Due to the interaction of the shear and compression loads, buckling occurs at loads lower than the pure shear and pure compression buckling loads. Failure prediction for panels under combined loads can be obtained by generating a failure load envelope as shown in Figure 1 and locating the failure load for a given compression to shear load ratio. The possible failure modes under combined loading are the same as previously mentioned for pure shear and pure compression loading. An additional consideration for combined loads is that prediction of stiffener crippling and skin rupture must now account for load interaction effects.

The complexities of load redistribution after skin buckling and existence of multiple failure modes, make the use of rigorous analysis techniques to design postbuckled structures prohibitive. The methods presented in the Design guide, therefore, are semi-empirical and intended for rapid iterative design.

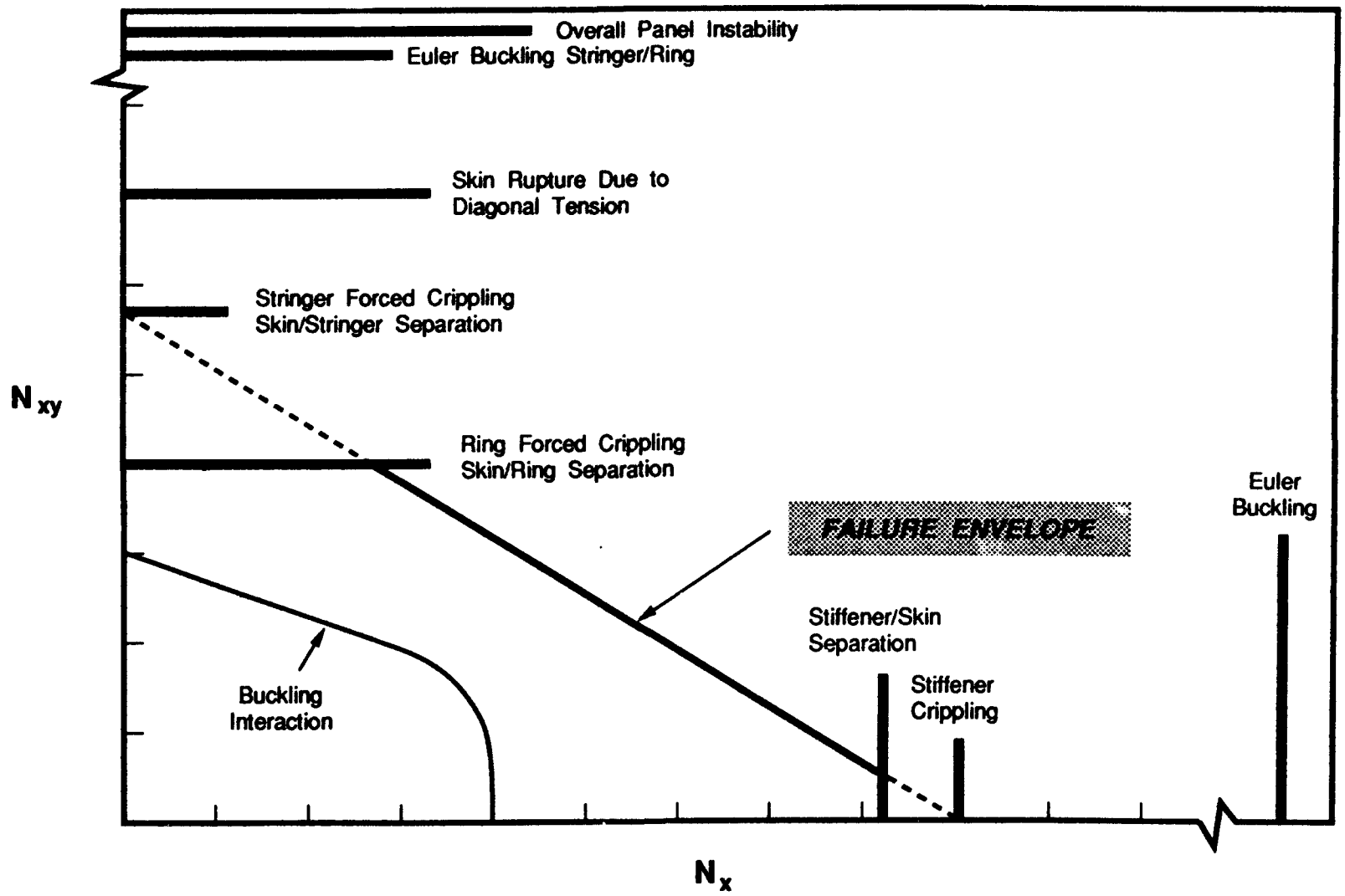

Figure 1. Schematic of a Failure Envelope for Postbuckled Composite Panels Under Combined Compression and Shear Loading.

SECTION 2
DESIGN METHODOLOGY

2.1 OVERVIEW OF DESIGN PROCEDURE

A flow chart summarizing the design procedure for flat and curved, composite or metal panels is shown in Figure 2. The various steps involved in the design procedure are detailed in the following paragraphs. The underlying analytical basis for detail design of the panels is documented in Reference 3. The analysis procedure outlined in Figure 2 is coded in computer program PBUKL. Detailed instructions for the use of this program are given in Reference 2. The equations for analysis incorporated in program PBUKL pertain to cylindrically curved composite panels and to flat composite panels if the radius of curvature in the latter case is set to a very high value (of the order of 10^{10}). Use of appropriate values for the elastic constants in the program permits its direct application to metal panels. In this section, the methodology for accomplishing detail design using PBUKL is demonstrated. Examples are given in Section 3 to illustrate the application of the methodology.

2.2 DESIGN CRITERIA

The design criteria that need to be established at the outset are:

(a) Materials and material properties,
(b) Design allowable stresses and strains, and
(c) Initial skin buckling load and its relationship to load factor (g-level) and the design limit load.

The material properties that should be established are the elastic constants and the ultimate compression strains (ϵ_{cu}) or stresses (F_{cu}). The latter values are required in the stiffener crippling calculations. The ultimate compression stress values for metals can be obtained from MIL-HDBK-5. For composite materials typical of current usage on military aircraft (e.g., T300/5208, AS/3501-6 graphite epoxies) the ultimate strain ϵ_{cu} can either be determined from unnotched coupon tests or the following values may be used.

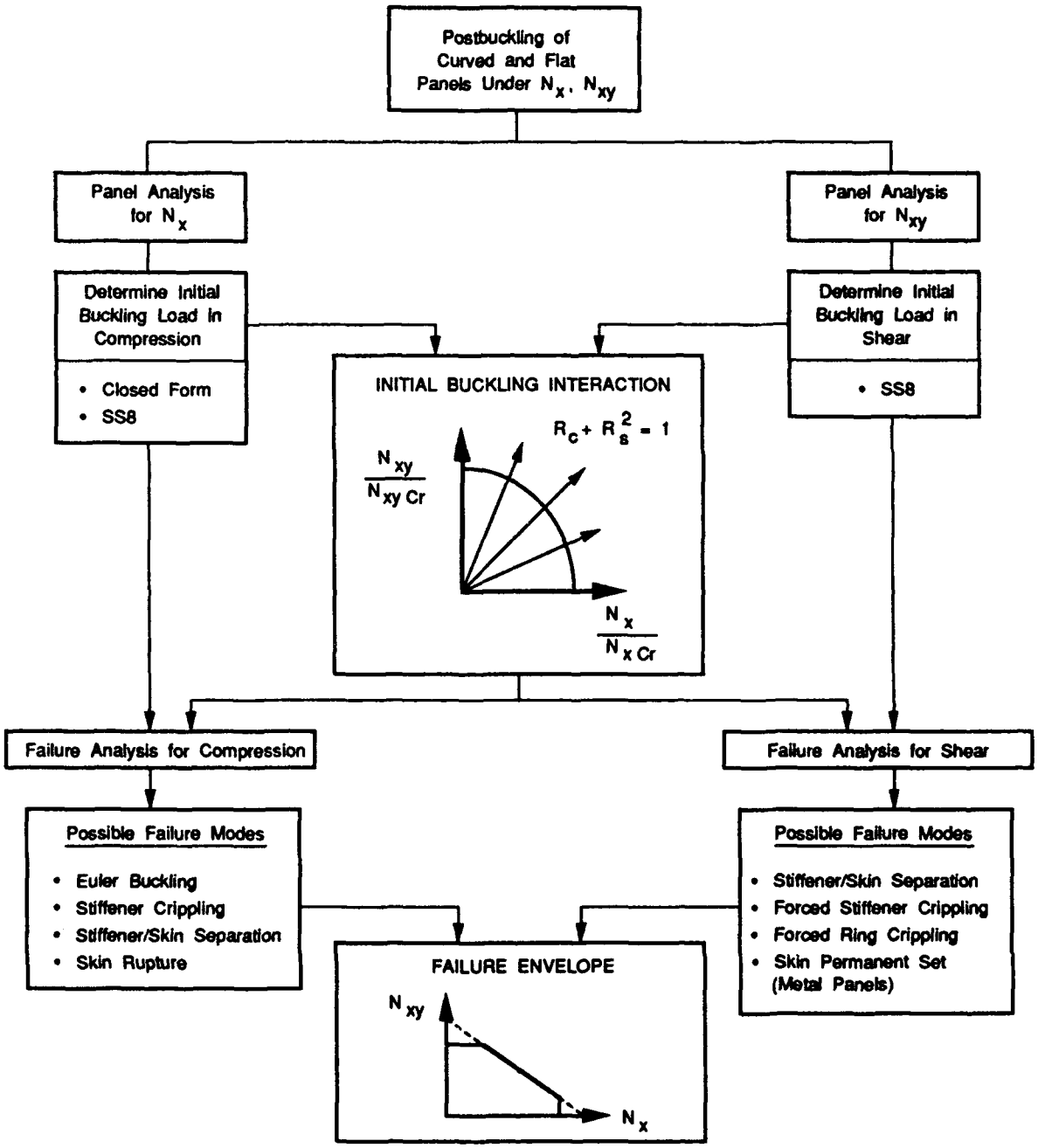

Figure 2. Design Procedure Flowchart for Postbuckled Metal and Composite Panels.

$$\epsilon_{cu} = 0.012 \text{ for laminates with at least 40 percent 0-degree plies}$$
$$= 0.015 \text{ otherwise} \quad (1)$$

Design data required for composites are the allowable strains in compression and tension which can be considerably lower than the ultimate values.

The general guideline to be followed in defining the initial buckling load is that the skins must not buckle under loads equivalent to 1-g or less. The 1-g condition corresponds to level flight or ground storage. In order to realize the potential advantages of postbuckled designs, the skin buckling loads must be set between 25 to 35 percent of the design limit load (DLL). Thus, the shear flow at design ultimate load (DUL) ranges between 4 to 6 times the initial skin buckling shear flow for a constant compression to shear load ratio. The critical static load conditions provide the basis for defining the design ultimate internal shear flow and compression that the panel must sustain without rupture or collapse.

2.3 CONFIGURATION SELECTION

The overall structural requirements, to a large extent, dictate the selection of a stiffened panel configuration. The size and curvature of the panel are determined by panel location on the actual structure. In many instances the frame spacing is predetermined by the overall structural configuration and, thus, only the stringer spacing needs to be determined in preliminary design. Selection of a stringer spacing and frame spacing is interrelated with the design of the skin for a specified buckling load. These geometric parameters, therefore, are determined in the preliminary design stage.

The most significant decision to be made at this stage is the selection of stringer and frame configurations, i.e., the stiffener cross-sectional shapes. The primary considerations in selecting stiffener cross-sectional shapes are structural efficiency, manufacturing ease, and simplicity of attachment to substructure. The most popular concepts in metal designs have been open-section stiffeners such as I-, J-, Z-, inverted hat and blade

sections since they facilitate joints and splices and attachment to substructure. In addition, closed section stiffeners such as hat stiffeners have also been used. In composite panel designs the same stiffening concepts, with the exception of Z-sections, can be used. Z-section stiffeners are not desirable since the single skin attach flange in cocured or adhesively bonded construction does not provide adequate strength under pull-off loads in practical designs.

As a first step in choosing a cross-sectional shape for the stiffeners, a weight comparison of the different concepts for given loading conditions is necessary. Recognizing that the stiffeners in postbuckled panels are axial compression load carrying members and that the stiffeners as a whole remain stable up to failure, weight comparisons carried out for stiffened panels under compression loading can be used to evaluate relative efficiencies. Several analytical and experimental studies (e.g., References 4 through 7) have been conducted to evaluate the relative efficiencies of the commonly used stiffening concepts for metals and composites. The results of Reference 6, in particular, are useful in guiding the selection of stiffener configuration on the basis of weight. These results are summarized in Figure 3, reproduced from Reference 6. As is evident from Figure 3, the graphite epoxy J- and blade configurations have similar structural efficiencies. However, for graphite-epoxy, the hat section stiffeners provide a 32 percent higher efficiency and, thus, are most desirable in minimizing weight. The trends are similar for metal panels with the hat stiffeners providing a 22 percent efficiency gain as compared to the open section stiffeners. For both material types, the J-section stiffeners have a slight edge in efficiency (approximately 5 percent) over blade stiffeners.

The higher efficiency of hat stiffeners and the ease of manufacturing and attachment of open sections implies that the final stiffener cross-section selection will be a compromise. In general, for curved frame/longeron or curved frame/stringer type construction, hat section stringers and J-section frames provide an efficient combination. For floating frame/stringer type construction used only in metal panels, inverted hat section stringers and J-section frames may be desirable.

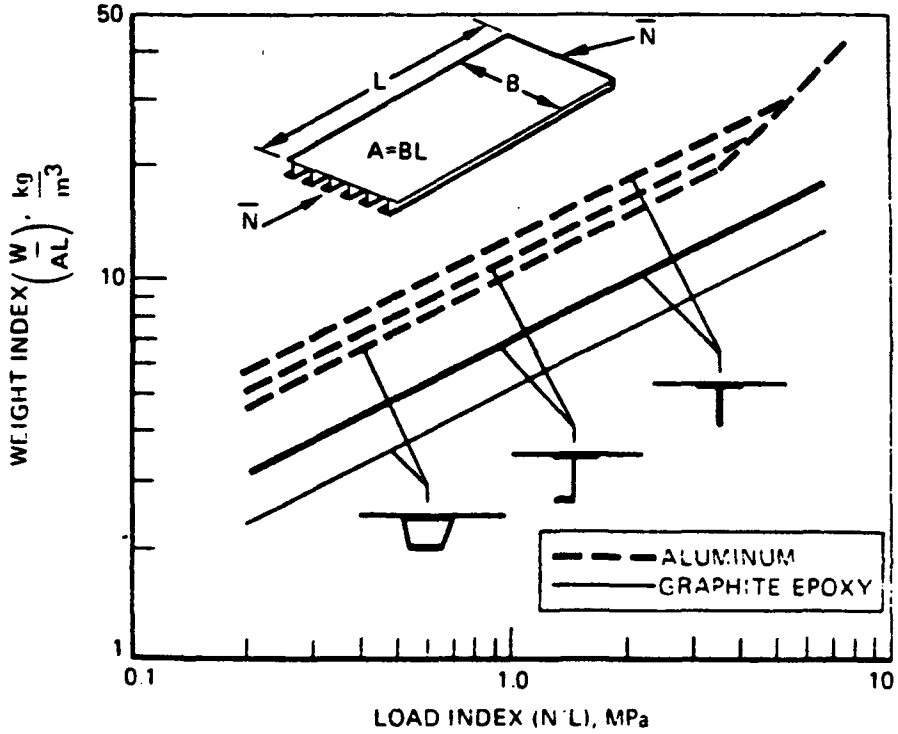

Figure 3. Compression Load Structural Efficiency Comparison for Hat-, J-, and Blade Configurations (Reference 6).

2.4 PRELIMINARY DESIGN

The design variables calculated in preliminary design are the skin thickness and the stiffener spacing. The design drivers are the skin initial buckling loads $\overset{o}{N}_{xcr}$ and $\overset{o}{N}_{xycr}$. The limiting criteria are the minimum permissible skin thickness (0.04 inch for graphite/epoxy and 0.02 inch for aluminum) and a reasonable stiffener spacing. The design variables to be selected are shown in Figure 4 where one bay of the curved panel is shown. The stiffener-cross-sectional shapes shown are for reference only.

The calculations are carried out by first fixing the frame or ring spacing, h_r, and selecting a skin thickness. For composite panels, the number and orientation of plies must also be tentatively selected. If the frame spacing is not predetermined by the overall structural configuration then a value between 15 inches and 30 inches for frame/stringer construction may be selected. For frame/longeron construction, the frame spacing may range between 4 inches to 10 inches.

In order to size the skin, a good starting point is minimum gage thickness dictated by prevalent design practice. The skin thickness may have to be increased in metal panels if countersunk fasteners have to be accommodated. Metal skin mid-bay thicknesses in the range of 0.05 inch to 0.063 inch are most commonly used. Lands milled in the metal skins under stiffeners can serve to accommodate the countersunk fasteners.

Available design data show that for composite panels skin thicknesses slightly greater than the minimum permissible gage are adequate for postbuckled structures. Ply orientations that are predominantly ±45° are most efficient for buckling critical designs. As in conventional composite construction, the stacking sequence should be balanced and symmetric. Biwoven or unidirectional graphite/epoxy may be used to fabricate the skins. The improved drapability of woven graphite/epoxy facilitates layup of curved skins. Unidirectional 0-degree and 90-degree plies are usually included in the skin layup to resist transverse axial loads or pressure if these loads are

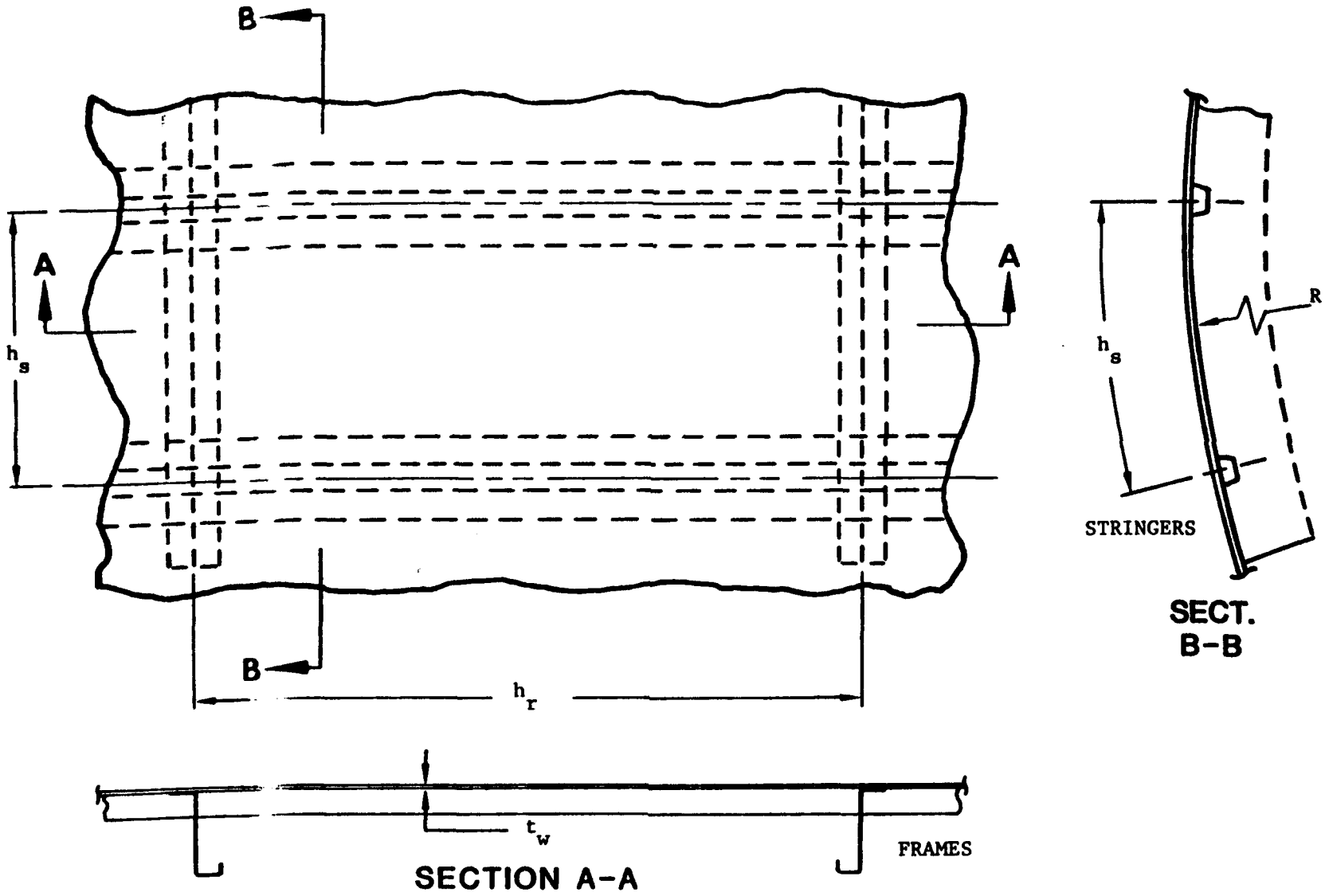

Figure 4. Panel Design Variables.

present in addition to the shear and the longitudinal compression. Since the 0's and 90's can be used as single plies as opposed to the ±45's which must be used in pairs, the former are also more convenient in building up skin thickness to a specific requirement.

On the basis of above consideration, if the buckling load requirements have to be met then layups such as $[\underline{\pm 45}]_{2s}$, $[\underline{45}]_4$ $[\underline{45}_2/0/\underline{45}_2]$, $[\underline{45}/90/0/90/\underline{45}]$, where __ denotes a woven ply, may be initially selected for the skin laminate. Extra plies may be added during the course of the design iteration.

Shear Buckling of Skin ($\overset{o}{N}_{xycr}$)

The next step consists in calculating the skin buckling load $\overset{o}{N}_{xycr}$ as a function of the stringer spacing h_s. These calculations have to be carried out for each skin thickness being considered and in the case of composites for each ply layup. The shear buckling stress for composite skins can be calculated using program SS8 documented in Reference 8. The skin boundary conditions are assumed to be simply supported at the curved frames and at the stringers. The curved metal panel initial buckling stress can be calculated using the following equation:

$$\left.\begin{array}{ll} \tau_{cr,\ elastic} = \dfrac{K_{s1}\pi^2\ E.h_s^2}{12R^2Z^2} & \text{if } h_r \geq h_s \\[2ex] \dfrac{K_{s2}\pi^2\ E.h_r^2}{12R^2Z^2} & \text{if } h_r \leq h_s \end{array}\right\} \qquad (1)$$

where,

K_{s1}, K_{s2} = critical shear stress coefficients for simply supported curved plates determined from Figures 5 and 6 (Reference 9).

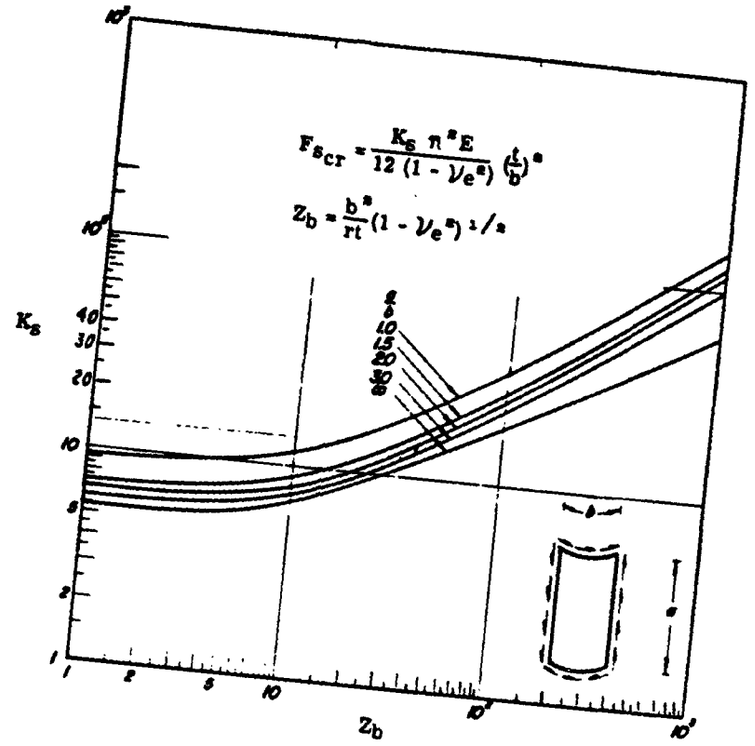

Figure 5. Shear Buckling Coefficient for Simply Supported Curved Metal Panel. Curved Edge Shorter than Straight Edge.

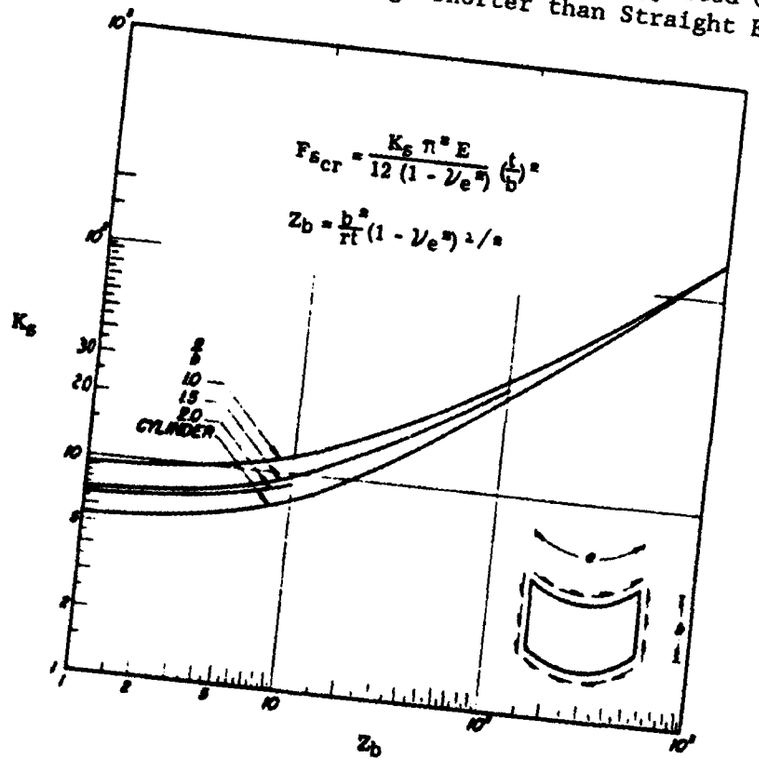

Figure 6. Shear Buckling Coefficient for Simply Supported Curved Metal Panel. Curved Edge Longer than Straight Edge.

For flat metal skins the elastic buckling stress is determined using the following equation:

$$\tau_{cr} = K_s E_c \left(\frac{t}{h_s}\right)^2 \tag{2}$$

with

$$K_s = 4.83 + 3.61 \left(\frac{h_s}{h_r}\right)^2 \tag{3}$$

which is plotted in Figure 7.

The metal panel skins in both cases are assumed to be simply supported at the stringers and the frames.

In Equations 2 and 3,

h_s is stringer spacing, inches
h_r is ring or frame spacing, inches
R is panel radius, inches
t is skin thickness, inches
E_c is the compression modulus of the skin, psi

$$Z = \frac{h_s^2}{Rt_w} \sqrt{(1 - \nu^2)} \qquad \text{if } h_r \geq h_s$$

$$= \frac{h_r^2}{Rt_w} \sqrt{(1 - \nu^2)} \qquad \text{if } h_s \geq h_r$$

ν is the Poisson's ratio for the skin material.

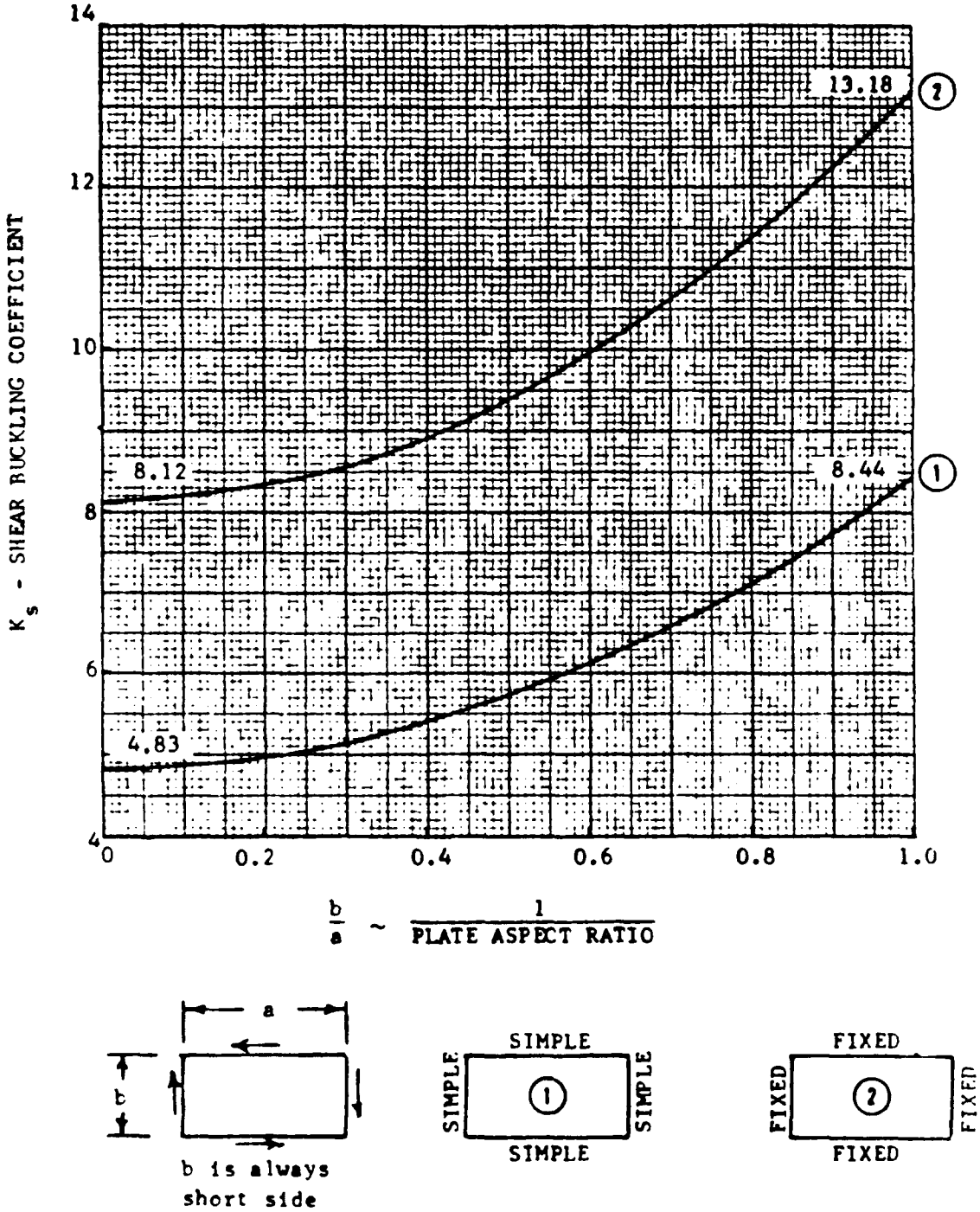

Figure 7. Shear Buckling Coefficient for Flat Panels.

Compression Buckling of Skin

The compression buckling stress for curved metal sheet panels can be calculated from:

$$F_{CR} = \frac{K_c \pi^2 E}{12(1-\nu^2)} \cdot \left(\frac{t_w}{b_s} \right)^2 \tag{4}$$

where,

F_{CR}	buckling stress, psi
t_w	thickness of the skin, inches
b_w	effective width of skin panel, inches
E, ν	modulus and Poisson's ratio for the sheet metal
K_c	buckling coefficient determined from Figure 8 (Reference 9)

The theoretical value of K_c is obtained from the buckling equations for thin cylindrical shells and is a function of the nondimensional curvature Z of the panel expressed as

$$Z = \frac{b_s^2 (1-\nu^2)^{1/2}}{r t_w} \tag{5}$$

where r is the radius of the cylindrical panel. Experimental data have shown that K_c is also a function of the r/t ratio for the panel. The design curves of Figure 8, obtained from test data, show this dependence of K_c on r/t.

Compression buckling strains for curved composite panels can be accurately determined through the use of computer code SS8 (Reference 8), for example. However, for an approximate calculation of the skin buckling strain in cases where the stiffener spacing is realistic, the simplified equation given below has been programmed in PBUKL.

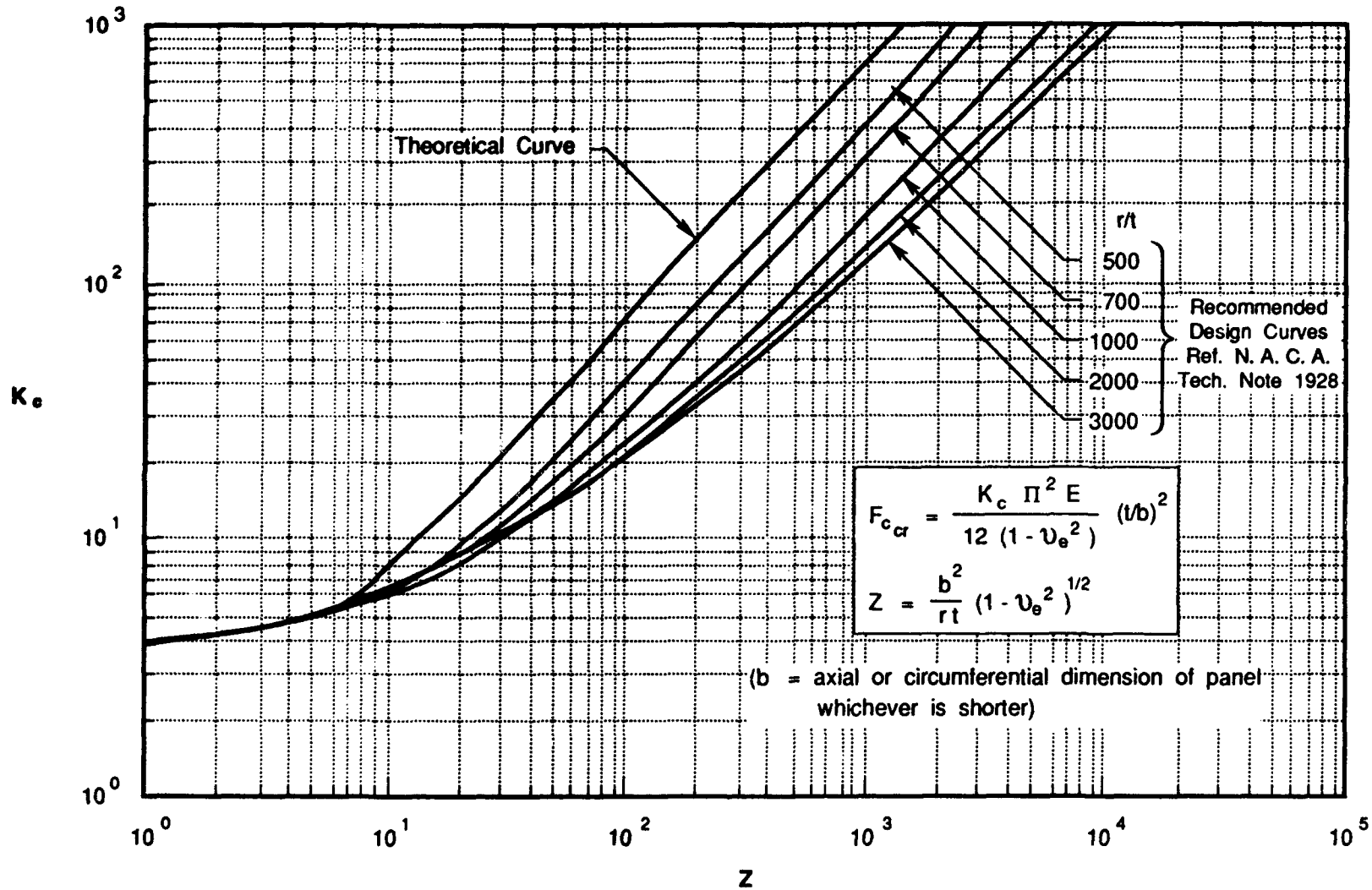

Figure 8. Axial Compression Buckling Coefficients for Long Curved Plates (Reference 9).

$$\varepsilon_{cr}^{w} = \left(\frac{m\pi}{L}\right)^2 \frac{1}{E_{xw}t_w}\left[D_{11} + 2\,(D_{12} + 2D_{66})\left(\frac{nL}{mb_w}\right)^2 + D_{22}\left(\frac{nL}{mb_w}\right)^4\right]$$

$$+ \frac{E_{yw}}{\left(\frac{m\pi}{L}\right)^2 R^2 \left[E_{xw} - \left(2\nu_{xyw}E_{yw} - \frac{E_{xw}E_{yw}}{G_{xyw}}\right)\left(\frac{nL}{mb_w}\right)^2 + E_{yw}\left(\frac{nL}{mb_w}\right)^4\right.} \qquad (6)$$

where D_{ij} are the terms of the bending stiffness matrix of the composite skin, E_{xw}, E_{yw}, G_{xyw}, ν_{xyw} and t_w are the web elastic constants and thickness, respectively, L is the panel length, b_w is the effective width of the skin, r is the radius of curvature of the panel and n and m are the integer coefficients representing number of half buckle waves in the width and length direction, respectively. The lowest value of strain for various values of n and m represents the buckling strain of the panel.

The panel length L corresponds to the frame spacing h_r. The panel effective width b_w equals the stringer spacing h_s for preliminary design. In detail design, however, b_w equals the distance between stringer fastener lines for metal panels and the distance between adjacent stringer flange centerlines as shown in Figure 9. For both metal and composite panels the boundary conditions are assumed to be simply supported at the stringers and the frames.

Buckling Loads Under Combined Compression and Shear

The buckling loads under combined compression and shear can be obtained from the following interaction rules.

$$R_c + R_s^2 = 1 \qquad \text{for metal panels}$$
$$R_c + R_s = 1 \qquad \text{for composite panels} \qquad (7)$$

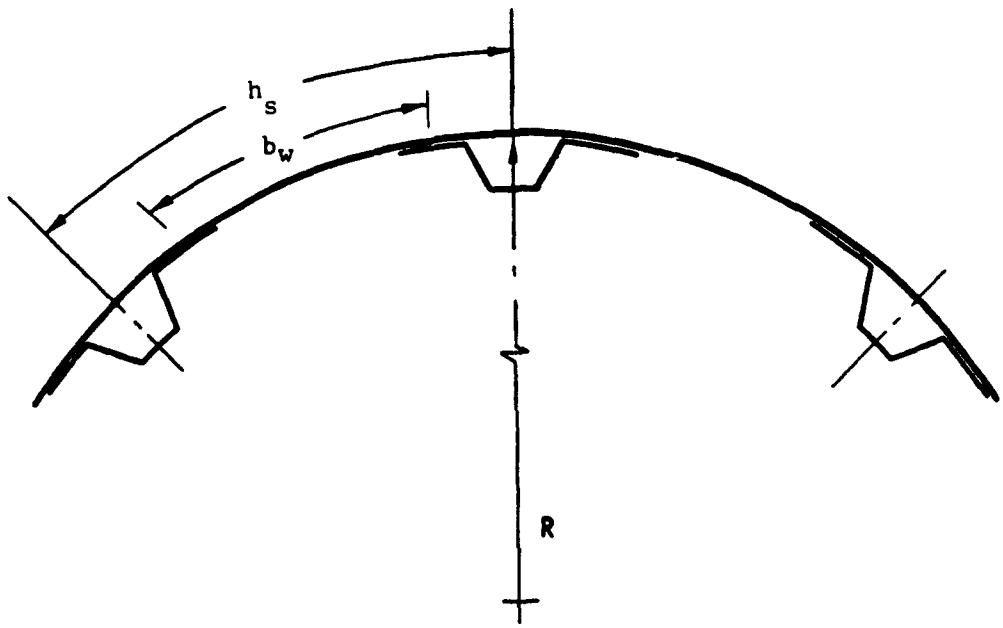

Figure 9. Skin Width b_w for Composite Panel Initial Buckling Strain Calculations.

where, $R_c = N_{xcr}/\overset{o}{N}_{xcr}$ and $R_s = N_{xycr}/\overset{o}{N}_{xycr}$. For design purposes the ratios $N_{xcr}/N_{xycr} = A$ and $\overset{o}{N}_{xcr}/\overset{o}{N}_{xycr} = B$ are useful. The ratio B is determined by the design criteria adopted e.g., if the pure compression and pure shear buckling loads are in the same ratio as the respective ultimate loads, then

$$\frac{N^o_{xcr}}{N^o_{xycr}} = \frac{N_{xult}}{N_{xyult}} = B$$

where $\overset{o}{N}_{xycr}$ may be set at 30 percent of N_{xult}.

Selection of Skin Thickness and Stringer Spacing

The skin thickness and stringer spacing are selected from plots of the calculated buckling loads versus the stringer spacing. In order to illustrate the procedure, two such plots corresponding to Design Example No. 1 at the end of this section are shown in Figure 10. Referring to the figure, a buckling parameter λ, equal to the ratio of the calculated buckling load and the design buckling load, is plotted against the stringer spacing h_s. The buckling loads were calculated for both clamped and simply supported boundary conditions. As is evident from Figure 10, the $[\underline{45}_2/0/\underline{45}_2]$skin layup with a 10-inch stringer spacing is the preferred design since for the thinner skin with a $[\underline{45}/90/0/90/\underline{45}]$ layup the narrower stringer spacing is bound to impose a weight penalty. Thus, a selection of skin thickness and stringer spacing can be made by comparison of such plots for the various skin thicknesses and layups that were initially picked for evaluation.

2.5 DETAIL DESIGN

Detail design of the curved panels involves sizing of the stringers and the frames, computing margins for the various possible failure modes and constructing a failure envelope. The procedure is iterative in that initial sizes are assumed for the stiffeners, the margins are computed, and if any of

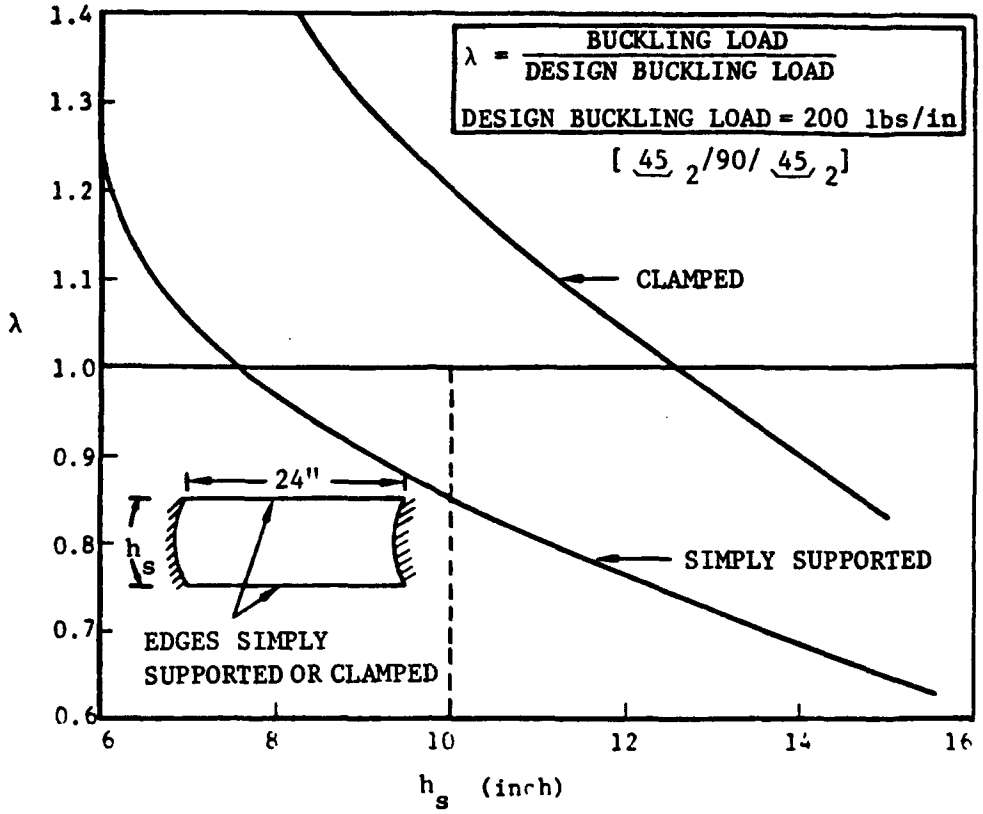

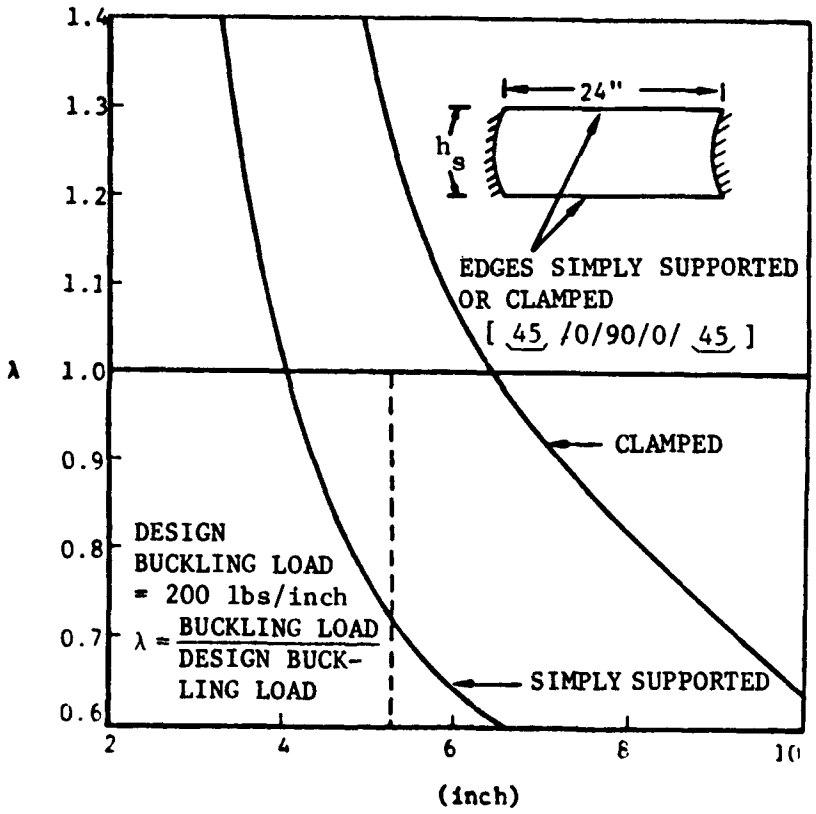

Figure 10. Shear Buckling Load N^{o}_{xycr} Versus Stringer Spacing for $[\underline{45}_2/90/\underline{45}_2]$ and $[\underline{45}/0/90/0/\underline{45}]$ Skin Layups.

the margins are negative or too high, the stiffeners are resized and new margins are computed. This iteration is continued until all margins are positive and reasonable in magnitude so that any weight penalties are minimized. The various steps in the detail design procedure are described in the following paragraphs.

Initial Stringer and Frame Dimensions

The stringer and frame cross-sectional shapes are selected as described in Section 2.3. For metal panels, the initial dimensions are determined by selecting a standard section such as the AND-series I, J or Z sections. The stiffener cross-sectional area selected for the first iteration may be arbitrary unless historical data are available or geometric constraints dictate certain dimensions. Exact section dimensions can be determined only after several iterations.

In the case of composite panels, on the basis of structural efficiency, the most commonly used stiffener shapes are hat, J or blade sections. The selection of initial stiffener sizes in this case requires a definition of the ply composition for various elements of the stiffener in addition to the dimensions. Studies on optimizing stiffener cross-sections conducted in References 4 and 6 have led to the general guidelines shown in Figure 11 for selecting efficient and practical layups in the design of stiffeners under axial compression loads. The recommended additional 0-degree plies in the skin should be utilized to ensure a slight taper in the stiffener flange bonded or cocured to the skin. This can be accomplished by gradually dropping-off the 0-degree plies as shown in Figure 12. The smooth transition from the stiffener flange to the skin is essential for stiffener/skin interface strength.

The composite stiffener dimensions that need to be selected are shown in Figure 12 as the widths b_i and the thicknesses t_i. For initial sizing, typical range of values for the stiffener element widths and the ply distributions are shown in Figure 13. These dimensions were obtained from a survey of panel designs that have been tested and must be treated as guidelines only.

Hat Section Stiffeners

1. High axial stiffness (0°) plies should be placed in the hat cap and skin directly above the cap.

   Reason: Provide high bending stiffness to resist overall buckling of the panel.

2. Hat webs should be entirely $\pm 45^o$ material.

   Reason: Minimize compression load in web and provide increased shear stiffness.

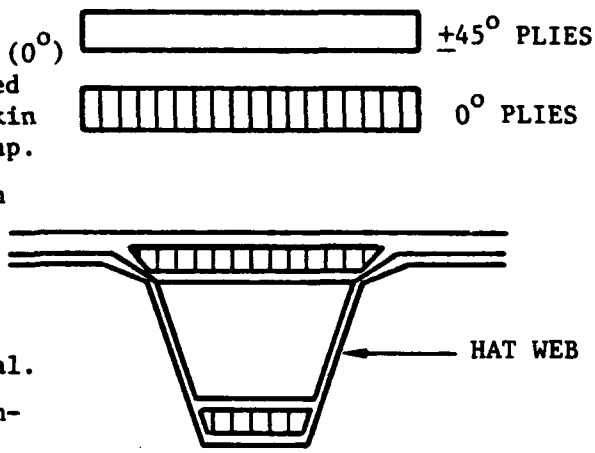

J and Blade Section Stiffeners

1. High axial stiffness plies in cap and in skin under stiffener.

   Reason: High bending stiffness stiffener.

2. Stiffener webs should be entirely $\pm 45^o$ material.

   Reason: Minimize axial load in webs, thus, suppressing local buckling.

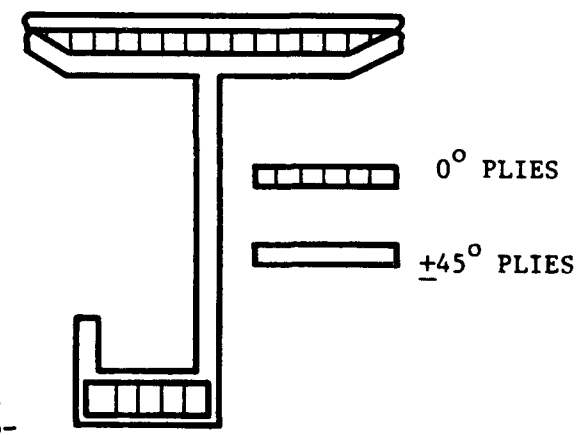

Figure 11. General Guidelines for Selecting Ply Distribution in Stiffeners Under Axial Compression.

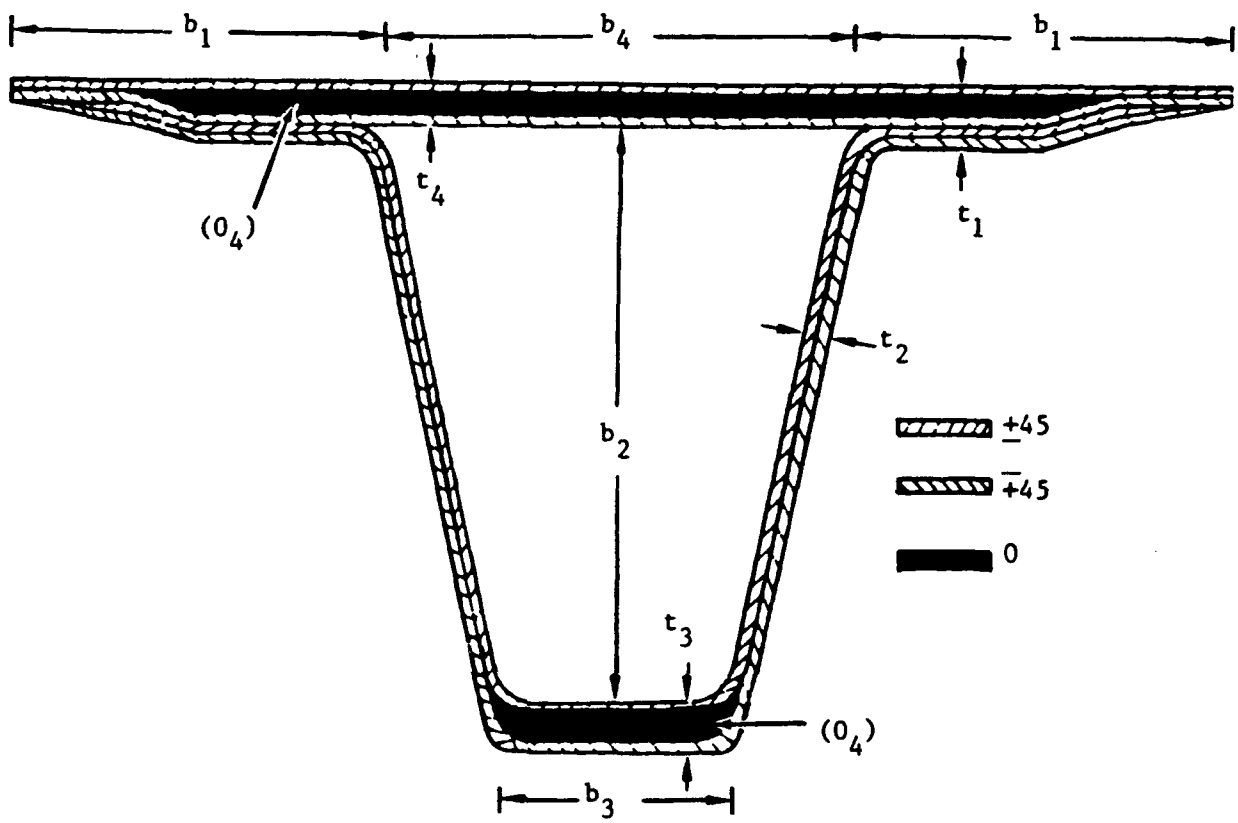

Figure 12. Ply Drop-Offs in Hat Section Stiffener and Stiffener Design Variables.

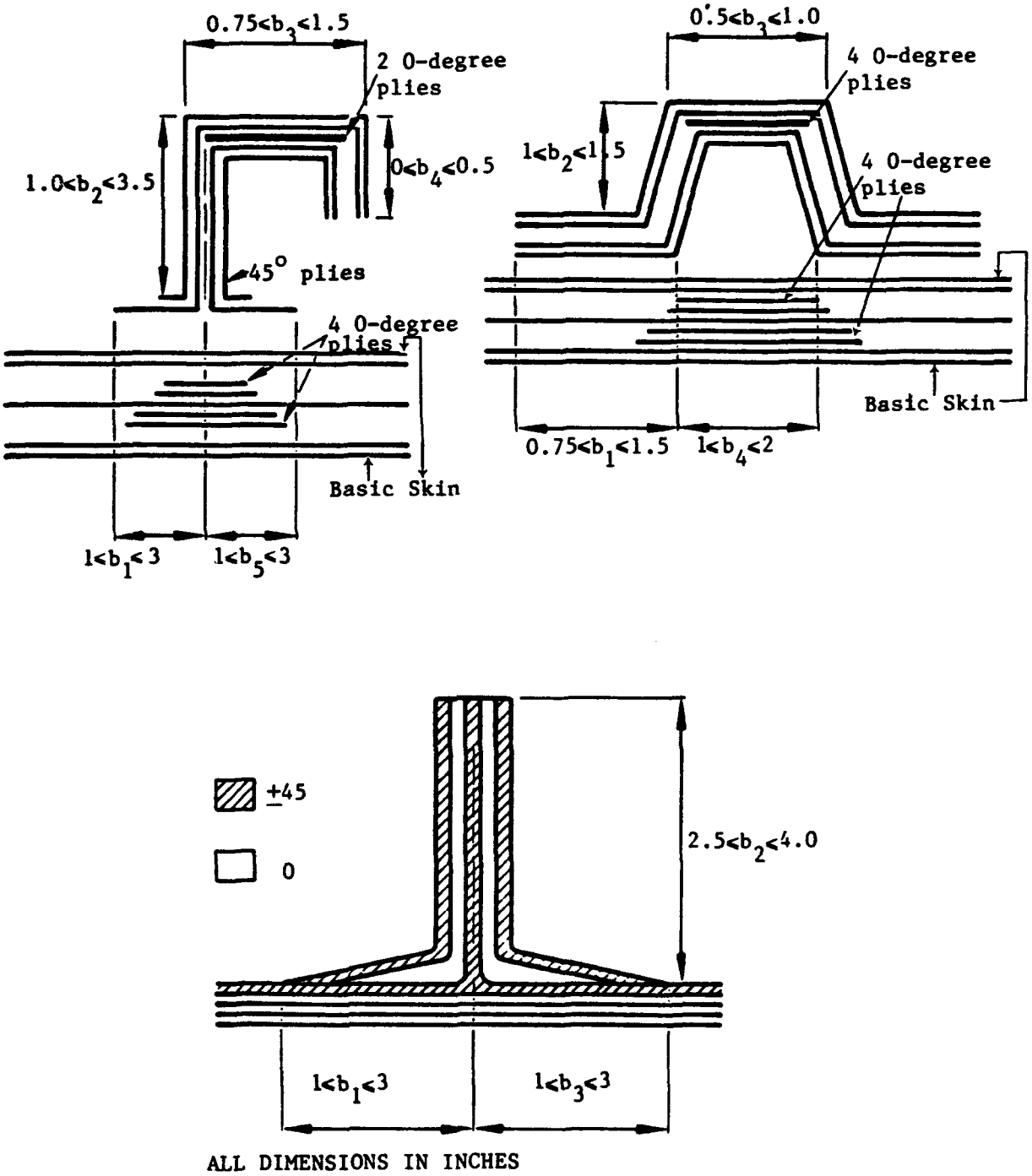

Figure 13. Typical Stiffener Dimensions for Initial Sizing.

Effective Stiffener Areas

Calculation of effective stiffener areas must take into account the presence of lands in metal skins and ply drop-offs in composite skins. In metal skins if a web land occurs in conjunction with the stiffener, the increase in web thickness is assumed an integral part of the stiffener. For composite panels the thickness of stiffener flanges attached to the skin is defined as the average thickness of the tapered flange-skin combination with the width equal to the actual flange width. The skin under the cap of a hat section stiffener is assumed to be an integral part of the stiffener.

Stiffener Sizing and Margin Computation

This step is the crux of the detail design activity. Stiffener sizing and margin computation for the panels is accomplished using the static analysis of Reference 3 which is coded in program PBUKL. The basic semi-empirical equations in the analysis and the failure criteria are detailed in Reference 3. The semi-empirical equations are not repeated here. The emphasis instead is on demonstrating the use of PBUKL in designing postbuckled panels. Failure modes that are unique to metals or composites and which have to be checked for manually are given in this Guide.

Panel Failure Modes Under Pure Shear

The possible failure modes that have to be checked for in designing the panels for diagonal tension due to shear are:

(a) Column stability of stringers and rings or frames

(b) Stability of the entire panel

(c) Forced crippling of stringers and frames

(d) Stiffener/skin separation for composite panels

(e) Permanent set in metal skins due to yielding in diagonal tension, and

(f) Skin rupture in metal and composite panels.

- o Ultimate Failure in shear for metals
- o Diagonal tension failure in composites

Checks for failure modes (a) through (d) are incorporated in program PBUKL. The metal panel permanent set check has to be performed manually.

Permanent Set Check

To check for skin rupture and permanent set in the case of metal panels the following equations are used:

The ultimate allowable shear stress in metal skins is given by:

$$F_s = 0.9\ F_{ty} \left[1 + 0.5 \left(\frac{F_{tu}}{F_{ty}} - 1\right)^2\right]\left[0.5 + (1-k)^3 \left(\frac{F_{su}}{F_{tu}} - 0.5\right)\right] \qquad (8)$$

where,

F_s is the ultimate allowable web shear stress, psi.

F_{tu} is the allowable ultimate tension stress for the web material, psi.

F_{ty} is the allowable tension yield stress for the web material, psi.

F_{su} is the allowable ultimate shear stress for the web material, psi.

Equation 8 is limited to essentially isotropic metallic materials. In cases where a slight difference exists in the mechanical properties in the longitudinal (L) and long transverse (LT) directions, use the minimum properties. Since the equation was obtained by a fit to test data, the effects of plasticity are included.

In general, permanent set in the skin at limit load is not permitted. The maximum allowable value of the diagonal tension factor at ultimate shear stress (k_{all}) to prevent permanent buckling of the skin at limit load is given by:

$$k_{all} = 0.78 - (t - 0.012)^{0.5} \qquad (9)$$

This equation is based on flat aluminum metal panel data and is conservative for curved panels.

SECTION 3

EXAMPLES

The semi-empirical design methodology is illustrated in this section by way of three examples. The first two examples are based on the curved composite and metal panels used in the test program. The third example is drawn from an actual fighter aircraft fuselage structure.

3.1 CURVED COMPOSITE PANEL

The design procedure outlined in the previous section is demonstrated by way of a program PBUKL run for the following problem.

Example 1

A postbuckled composite panel with a radius of 45 inches and 24 inches frame spacing (h_r) is to be designed to carry the following design ultimate loads:

Compression	N_{xult}	= 800 lbs/inch
Shear	N_{xyult}	= 875 lbs/inch

The skins are not permitted to buckle below 25 percent of the design limit load.

Design Procedure:

(a) Design criteria:

The materials selected are:

AS/3501-6 unidirectional graphite/epoxy for reinforcement of stiffener caps and skin under stiffener.

A370-5H/3501-6 woven graphite/epoxy for skins and stiffeners.

Lamina Properties:

	A370-5H/3501-6	AS/3501-6
Per ply thickness, inch	.013	.0052
EL, psi	10.0×10^6	18.7×10^6
ET, psi	9.2×10^6	1.87×10^6
GLT, psi	0.9×10^6	0.85×10^6
NULT	0.055	0.3

Material Notched Allowables:

ε_{all} = 0.004 in tension and compression

Loads:

Design Ultimate shear flow (DUL) = 875 lbs/inch

Design limit shear flow (DLL) = 583 lbs/inch

Initial skin buckling load (IBL) = 220 lbs/inch

(b) Configuration Selection:

Panel radius R = 45 inch
Frame Spacing h_r = 24 inch
} Given

Skins to be designed primarily for buckling.

Select viable skin layups:

Layup 1 - $[\underline{45}_2/90/\underline{45}_2]$ underscore denotes a woven ply

Total skin thickness = 0.0572 inch

Layup 2 - $[\underline{45}/90/0/90/\underline{45}]$

Total skin thickness = 0.0416 inch

Select stiffener cross-sectional shape on the basis of efficiency and ease of attachment to substructure.

- o Hat section stringers selected for efficiency

- o J section frames selected for efficiency and ease of attachment to substructure.

(c) Preliminary Design:

(1) Obtain skin buckling load ($\overset{o}{N}_{xy,cr}$) as a function of stringer spacing (h_s) using program SS8 for fixed and simply supported boundary conditions at the stringers and fixed boundary conditions at the frames. Both layups to be considered.

(2) $\overset{o}{N}_{xycr}$ versus h_s plots for the two layups are shown in Figure 10.

(3) Skin layup 1 with $[\underline{45}_2/90/\underline{45}_2]$ orientation of plies with larger stiffener spacing selected for efficiency and reduced manufacturing cost.

(4) h_s = 10 in., t = 0.0572 in.

(d) Detail Design:

(1) Select initial dimensions and ply distribution for stiffeners using the range of values given in Figure 13 and previous experience.

(2) Analyze design using PBUKL

An edited summary of the 3-bay stiffened panel analysis is shown in Figure 14. The output shows that for the combined loading case with N_x/N_{xy} = 0.91 (i.e., 800 lb/inch/875 lb/inch) the skin shear buckling load at 178 lb/inch is only 20 percent of the shear ultimate load and the lowest margin corresponding to frame/skin separation is negative. In addition, the ultimate shear load (i.e.,

```
EFFECTIVE PANEL LENGTH FOR SKIN BUCKLING =   22.50
EFFECTIVE PANEL WIDTH  FOR SKIN BUCKLING =    7.88

COMPRESSION BUCKLING LOADS HAVE BEEN COMPUTED THRU
     SIMPLIFIED ANALYSIS, OBTAIN NXYCR FROM SS8:
     APPLIED NX ONLY  (NXCR)    =   -266.78
     APPLIED NY ONLY  (NYCR)    =   -211.39
     APPLIED NXY ONLY (NXYCR)   =    200.00 ASSUMED VALUE

BUCKLING LOADS AFTER USER ADJUSTMENT (IF ANY):
     APPLIED NX ONLY  (NXCR)    =   -267.00
     APPLIED NY ONLY  (NYCR)    =   -211.00
     APPLIED NXY ONLY (NXYCR)   =    285.00


1    CASE NUMBER:        1
     LOAD NUMBER:  1 OF  3
     NX          :   800.00
     NY          :      .00
     NXY         :      .00


     SKIN PROPERTIES:
     ----------------

       LAYUP     THICK   EX    EY   GXY  NUXY BUC STRAIN  BUC EFF
                 (IN)  (MSI) (MSI) (MSI)        (MICRO)  WIDTH(IN)

      0/ 80/ 20  .0572  3.53  4.51  4.22  .538    1321.     7.88


     PROPERTIES OF STIFFENER ALONG X-AXIS
     ------------------------------------

     1111111114444444444411111111
              2          2
               2        2
                2      2
                 |3333|

     ELE  ELE      ELE      ELE   ELE   ELE      EPS     EPS     EPS
     NO  WIDTH    LAYUP    THICK   EX    EA      BUCL    CRIP    ULT
         (IN)    0/45/90   (IN) (MSI) (M-LBS)   (* IN MICRO UNITS *)

     1   1.000  18/ 72/  9  .120  4.70   .5618  13570.  13570.  15000.
     2   1.300   0/100/  0  .052  3.06   .2067  16576.  15000.  15000.
     3    .750  63/ 36/  0  .086  9.60   .6364  44671.  12000.  12000.
     4   1.120  54/ 36/  9  .088  8.92   .8828  21565.  12000.  12000.

     STIFFENER AXIAL STIFFNESS  "EA" (10**6 LBS) =   3.114
     STIFFENER MODULUS          "E " (10**6 PSI) =   5.770
     STIFFENER AREA             " A"     (IN**2) =   .5397
     NEUTRAL AXIS FROM SKIN OML "YBAR"      (IN) =    .452
     STIFFENER "EI" WRT N. AXIS (10**6 LB-IN**2) =    .947
     STIFFENER "GJ" TOR STIFF   (10**3 LB-IN**2) = 257.958
     STIFFENER CRIPPLING STRAIN "ECRIP"  (MICRO) =  12000.


     PROPERTIES OF STIFFENER ALONG Y-AXIS
     ------------------------------------

     1111122222|8888899999
               3
               3
               3
          5    3    7
          5    3    7
          |4444|6666|
```

Figure 14. Initial Design of Curved Composite Panel.

ELE NO	ELE WIDTH (IN)	ELE LAYUP 0/45/90	ELE THICK (IN)	ELE EX (MSI)	ELE EA (M-LBS)	EPS BUCL (* IN MICRO UNITS *)	EPS CRIP	EPS ULT
1	.750	37/ 62/ 0	.081	6.14	.3711	8617.	8617.	15000.
2	.750	45/ 54/ 0	.104	7.04	.5488	83170.	12000.	12000.
3	2.900	0/100/ 0	.052	3.06	.4610	3331.	3875.	15000.
4	.000	0/ 0/ 0	.000	.00	.0000	99000.	15000.	15000.
5	.000	0/ 0/ 0	.000	.00	.0000	99000.	15000.	15000.
6	1.000	33/ 66/ 0	.062	5.71	.3564	21558.	15000.	15000.
7	.400	0/100/ 0	.052	3.06	.0636	25381.	15000.	15000.
8	.750	45/ 54/ 0	.104	7.04	.5488	83170.	12000.	12000.
9	.750	37/ 62/ 0	.081	6.14	.3711	8617.	8617.	15000.

```
STIFFENER AXIAL STIFFNESS  "EA" (10**6 LBS) =   2.744
STIFFENER MODULUS          "E " (10**6 PSI) =   5.371
STIFFENER AREA             " A"     (IN**2) =   .5109
NEUTRAL AXIS FROM SKIN OML "YBAR"      (IN) =    .778
STIFFENER "EI" WRT N. AXIS (10**6 LB-IN**2) =   3.495
STIFFENER "GJ" TOR STIFF   (10**3 LB-IN**2) =   4.073
STIFFENER CRIPPLING STRAIN "ECRIP"  (MICRO) =   8617.


PANEL PROPERTIES
----------------

NO OF STIFFENERS PARALLEL TO X-AXIS =       3
STIFFENER SPACING            (INCH) =   10.00
PANEL LENGTH                 (INCH) =   24.00
PANEL RADIUS                 (INCH) =   45.00
SINGLE BAY "EI"    (10**6 LB-IN**2) =   1.198
SINGLE BAY "EA"         (10**6 LBS) =   5.134


FAILURE ANALYSIS SUMMARY (AXIAL COMPRESSION)
--------------------------------------------
```

FAILURE MODE	STRAIN (MICRO)	TOTAL LOAD (1000 LB)	TOTAL LOAD (LB/IN)	TOTAL LOAD (% STFNR)	MARGINS (%)
SKIN BUCKLING	1321.	10.9	1089.	83.76	-15.2
EULER BUCKLING	11990.	98.9	9890.	93.95	669.5
STIFFENER CRIPPLING	12000.	39.8	3978.	93.95	397.2
STIFFENER/SKIN SEPARATION	13570.	44.8	4482.	94.29	460.2

```
AXIAL LOAD IN STIFFENER BEFORE BUCK (%) =   60.66
AXIAL LOAD IN STIFFENER AT FAILURE  (%) =   93.95
SINGLE BAY LOAD AT FAILURE   (LBS/INCH) = 3977.64


LOWEST MARGIN                       (%) =    397.
CRITICAL FAILURE STRAIN          (MICRO) =  12000.
CRITICAL FAILURE MODE                    = STIFFENER CRIPPLING
CRITICAL AXIAL COMPRESSION LOAD (LB/IN) =   3978.


1       CASE NUMBER:        1
        LOAD NUMBER:  2 OF  3
        NX         :      .00
        NY         :      .00
        NXY        :   875.00
```

Figure 14. Initial Design of Curved Composite Panel (Continued).

```
FAILURE ANALYSIS SUMMARY (SHEAR LOAD ONLY)
------------------------------------------

APPLIED SHEAR FLOW NXY          (LB/IN) =  875.00
SKIN SHEAR BUCKLING NXYCR       (LB/IN) =  285.00
SKIN SHEAR BUCK STRAIN          (MICRO) = 1180.01
DIAGONAL TENSION FACTOR K               =    .548
DIAGONAL TENSION ANGLE ALPHA      (DEG) =  39.583
STIFFENER RIGIDITY MARGIN           (%) = 2703.80

   FAILURE MODE                  STRAIN        STRESS     MARGINS
   ------------                 (MICRO)         (KSI)        (%)
                             ALLOW  ACTUAL

SKIN BUCKLING                 1180.   3623.     4.983        -67.
STRINGER FORCED CRIPPLING     2723.   3081.   -17.481        -12.
FRAME FORCED CRIPPLING        2869.   3600.   -19.212        -20.
STRINGER EULER BUCKLING      208.4.   1495.    -8.483       1294.
FRAME EULER BUCKLING        502832.   1978.   -10.558      25320.
STRINGER SKIN SEPARATION      2723.   3081.   -17.481        -12.
FRAME SKIN SEPARATION         2869.   3600.   -19.212        -20.
STRINGER STATIC COMPRESSN    15000.   3081.   -17.481        387.
FRAME STATIC COMPRESSION     15000.   3600.   -19.212        317.
SKIN TENSILE RUPTURE          4000.   2855.    23.758         40.

LOWEST MARGIN                       (%) =    -20.
CRITICAL FAILURE STRAIN         (MICRO) =   2869.
CRITICAL FAILURE MODE                   = FRAME/SKIN SEPARATION
CRITICAL SHEAR LOAD             (LB/IN) =    759.


1       CASE NUMBER:        1
        LOAD NUMBER:  3 OF  3
        NX         :   800.00
        NY         :      .00
        NXY        :   875.00


FAILURE ANALYSIS SUMMARY (AXIAL COMPRESSION)
--------------------------------------------

 FAILURE MODE         STRAIN  ---------TOTAL LOAD----------- MARGINS
 ------------         (MICRO) (1000 LB)   (LB/IN)  (% STFNR)    (%)

SKIN  BUCKLING         1321.      10.9     1089.     83.76     -15.2
EULER BUCKLING        11990.      98.9     9890.     93.95     669.5
STIFFENER CRIPPLING   12000.      39.8     3978.     93.95     397.2
STIFFENER/SKIN
         SEPARATION   13570.      44.8     4482.     94.29     460.2

AXIAL LOAD IN STIFFENER BEFORE BUCK (%) =   60.66
AXIAL LOAD IN STIFFENER AT FAILURE  (%) =   93.95
SINGLE BAY LOAD AT FAILURE   (LBS/INCH) = 3977.64


LOWEST MARGIN                       (%) =    397.
CRITICAL FAILURE STRAIN         (MICRO) =  12000.
CRITICAL FAILURE MODE                   = STIFFENER CRIPPLING
CRITICAL AXIAL COMPRESSION LOAD (LB/IN) =   3978.


FAILURE ANALYSIS SUMMARY (SHEAR LOAD ONLY)
------------------------------------------

APPLIED SHEAR FLOW NXY          (LB/IN) =  875.00
SKIN SHEAR BUCKLING NXYCR       (LB/IN) =  178.05
SKIN SHEAR BUCK STRAIN          (MICRO) =  737.20
DIAGONAL TENSION FACTOR K               =    .703
DIAGONAL TENSION ANGLE ALPHA      (DEG) =  39.881
STIFFENER RIGIDITY MARGIN           (%) = 2703.80
```

Figure 14. Initial Design of Curved Composite Panel (Continued).

FAILURE MODE	STRAIN (MICRO) ALLOW	STRAIN (MICRO) ACTUAL	STRESS (KSI)	MARGINS (%)
SKIN BUCKLING	737.	3623.	3.113	-80.
STRINGER FORCED CRIPPLING	3216.	4139.	-23.481	-22.
FRAME FORCED CRIPPLING	3389.	5119.	-27.322	-34.
STRINGER EULER BUCKLING	20844.	2148.	-12.187	870.
FRAME EULER BUCKLING	502832.	3009.	-16.058	16613.
STRINGER SKIN SEPARATION	3216.	4139.	-23.481	-22.
FRAME SKIN SEPARATION	3389.	5119.	-27.322	-34.
STRINGER STATIC COMPRESSN	15000.	4139.	-23.481	262.
FRAME STATIC COMPRESSION	15000.	5119.	-27.322	193.
SKIN TENSILE RUPTURE	4000.	3137.	26.292	28.

LOWEST MARGIN (%) = -34.
CRITICAL FAILURE STRAIN (MICRO) = 3389.
CRITICAL FAILURE MODE = FRAME/SKIN SEPARATION
CRITICAL SHEAR LOAD (LB/IN) = 627.

Figure 14. Initial Design of Curved Composite Panel (Concluded).

zero margin load) for this panel configuration is 627 lb/inch. Thus, for the prescribed loading conditions, additional plies need to be added to the skin, and the ply count at the frame flange skin junction needs to be increased. Both these requirements were met by adding a 90-degree ply to the skin. The modified layup was, therefore, $[\underline{45}_2/90_2/\underline{45}_2]$ with a total skin thickness equal to 0.0624 inch.

Figure 15 shows the detailed analysis for this new configuration. As can be seen in the last block of output, the frame/skin separation margin is slightly positive at 3 percent and the ultimate shear load is 897 lb/in. The buckling load under combined compression and shear loading is 218 lbs/inch or approximately 25 percent of the ultimate load. This postbuckled design, therefore, is final.

3.2 Curved Metal Panel

The curved metal panel configuration selected for this example is identical to that used in the test program (Reference 10). The design criteria are identical to those used for the composite panel. The stringers and frames in this case are both Z-sections. Initially, a 0.050 inch 7075-T6 aluminum skin was selected for the design. Analysis of this configuration is summarized in the edited PBUKL output shown in Figure 16. Under combined compression and shear loads, the stringer forced crippling (since there is no stringer/skin separation mode of failure in metal panels) margin is -60 percent. Additionally, the shear buckling load under combined loading is only 21 percent of the shear ultimate load. Thus a redesign of the skin and the stiffeners is required.

After several iterations with PBUKL, a final combination of skin, stringer and frame sizes showing reasonably low positive margins was obtained. Analysis of this final design is summarized in Figure 17. The results in Figure 17 show the final dimensions, a shear buckling load that is 33 percent of the ultimate shear load and a +9 percent margin on stringer forced crippling.

```
EFFECTIVE PANEL LENGTH FOR SKIN BUCKLING =   22.50
EFFECTIVE PANEL WIDTH  FOR SKIN BUCKLING =    7.88

COMPRESSION BUCKLING LOADS HAVE BEEN COMPUTED THRU
     SIMPLIFIED ANALYSIS, OBTAIN NXYCR FROM SS8:
     APPLIED NX ONLY  (NXCR)    =   -332.58
     APPLIED NY ONLY  (NYCR)    =   -265.09
     APPLIED NXY ONLY (NXYCR)   =    200.00 ASSUMED VALUE

BUCKLING LOADS AFTER USER ADJUSTMENT (IF ANY):
     APPLIED NX ONLY  (NXCR)    =   -332.51
     APPLIED NY ONLY  (NYCR)    =   -265.04
     APPLIED NXY ONLY (NXYCR)   =    345.00


1    CASE NUMBER:        1
     LOAD NUMBER:  1 OF  3
     NX          :   800.00
     NY          :      .00
     NXY         :      .00


     SKIN PROPERTIES:
     ----------------

        LAYUP     THICK   EX    EY   GXY  NUXY BUC STRAIN  BUC EFF
                  (IN)  (MSI) (MSI) (MSI)        (MICRO)  WIDTH(IN)

      0/ 80/ 20  .0624  3.72  5.71  3.94  .439    1433.     7.88


     PROPERTIES OF STIFFENER ALONG X-AXIS
     ------------------------------------

     1111111114444444444411111111
              2          2
               2        2
                2      2
                 |3333|

     ELE  ELE      ELE      ELE   ELE   ELE      EPS     EPS     EPS
     NO  WIDTH    LAYUP    THICK   EX    EA      BUCL    CRIP    ULT
         (IN)   0/45/90   (IN) (MSI) (M-LBS)   (* IN MICRO UNITS *)

     1   1.000  30/ 61/  7  .138  6.35   .8747  12676.  12676.  15000.
     2   1.300   0/100/  0  .052  3.06   .2067  16576.  15000.  15000.
     3    .750  63/ 36/  0  .088  9.60   .6364  44671.  12000.  12000.
     4   1.120  54/ 36/  9  .088  8.92   .8828  21565.  12000.  12000.

     STIFFENER AXIAL STIFFNESS  "EA" (10**6 LBS) =   3.740
     STIFFENER MODULUS          "E " (10**6 PSI) =   6.492
     STIFFENER AREA             " A"     (IN**2) =   .5761
     NEUTRAL AXIS FROM SKIN OML "YBAR"      (IN) =    .390
     STIFFENER "EI" WRT N. AXIS (10**6 LB-IN**2) =   1.018
     STIFFENER "GJ" TOR STIFF   (10**3 LB-IN**2) = 259.685
     STIFFENER CRIPPLING STRAIN "ECRIP"  (MICRO) =  12000.


     PROPERTIES OF STIFFENER ALONG Y-AXIS
     ------------------------------------

     1111122222|8888899999
               3
               3
               3
         5     3     7
         5     3     7
         |4444|6666|
```

Figure 15. Final Design of the Curved Composite Panel.

ELE NO	ELE WIDTH (IN)	ELE LAYUP 0/45/90	ELE THICK (IN)	ELE EX (MSI)	ELE EA (M-LBS)	EPS BUCL (* IN MICRO UNITS *)	EPS CRIP	EPS ULT
1	.750	30/ 61/ 7	.138	6.35	.6561	22035.	15000.	15000.
2	.750	30/ 61/ 7	.138	6.35	.6561	157880.	15000.	15000.
3	2.900	0/100/ 0	.052	3.06	.4610	3331.	3875.	15000.
4	.000	0/ 0/ 0	.000	.00	.0000	99000.	15000.	15000.
5	.000	0/ 0/ 0	.000	.00	.0000	99000.	15000.	15000.
6	1.000	33/ 66/ 0	.062	5.71	.3564	21558.	15000.	15000.
7	.400	0/100/ 0	.052	3.06	.0636	25381.	15000.	15000.
8	.750	30/ 61/ 7	.138	6.35	.6561	157880.	15000.	15000.
9	.750	30/ 61/ 7	.138	6.35	.6561	22035.	15000.	15000.

```
STIFFENER AXIAL STIFFNESS  "EA" (10**6 LBS) =   3.529
STIFFENER MODULUS          "E " (10**6 PSI) =   5.451
STIFFENER AREA             " A"     (IN**2) =   .6474
NEUTRAL AXIS FROM SKIN OML "YBAR"      (IN) =    .640
STIFFENER "EI" WRT N. AXIS (10**6 LB-IN**2) =   3.813
STIFFENER "GJ" TOR STIFF   (10**3 LB-IN**2) =  10.587
STIFFENER CRIPPLING STRAIN "ECRIP"  (MICRO) =  15000.
```

PANEL PROPERTIES

```
NO OF STIFFENERS PARALLEL TO X-AXIS =       3
STIFFENER SPACING            (INCH) =   10.00
PANEL LENGTH                 (INCH) =   24.00
PANEL RADIUS                 (INCH) =   45.00
SINGLE BAY "EI"    (10**6 LB-IN**2) =   1.237
SINGLE BAY "EA"         (10**6 LBS) =   6.061
```

FAILURE ANALYSIS SUMMARY (AXIAL COMPRESSION)

FAILURE MODE	STRAIN (MICRO)	TOTAL LOAD (1000 LB)	(LB/IN)	(% STFNR)	MARGINS (%)
SKIN BUCKLING	1433.	14.0	1404.	83.73	8.6
EULER BUCKLING	10492.	102.8	10284.	93.30	694.9
STIFFENER CRIPPLING	12000.	47.9	4790.	93.71	498.7
STIFFENER/SKIN SEPARATION	12676.	50.5	5051.	93.87	531.4

```
AXIAL LOAD IN STIFFENER BEFORE BUCK (%) =   61.71
AXIAL LOAD IN STIFFENER AT FAILURE  (%) =   93.71
SINGLE BAY LOAD AT FAILURE   (LBS/INCH) = 4789.72

LOWEST MARGIN                       (%) =    499.
CRITICAL FAILURE STRAIN          (MICRO) =  12000.
CRITICAL FAILURE MODE                    = STIFFENER CRIPPLING
CRITICAL AXIAL COMPRESSION LOAD (LB/IN) =   4790.
```

```
1        CASE NUMBER:        1
         LOAD NUMBER:  2 OF  3
         NX         :      .00
         NY         :      .00
         NXY        :   875.00
```

Figure 15. Final Design of the Curved Composite Panel (Continued).

```
FAILURE ANALYSIS SUMMARY (SHEAR LOAD ONLY)
------------------------------------------

APPLIED SHEAR FLOW NXY          (LB/IN) =  875.00
SKIN SHEAR BUCKLING NXYCR       (LB/IN) =  345.00
SKIN SHEAR BUCK STRAIN          (MICRO) = 1402.76
DIAGONAL TENSION FACTOR K               =    .492
DIAGONAL TENSION ANGLE ALPHA      (DEG) =  39.472
STIFFENER RIGIDITY MARGIN           (%) = 2218.61

   FAILURE MODE                  STRAIN        STRESS     MARGINS
   ------------                 (MICRO)         (KSI)        (%)
                              ALLOW  ACTUAL

SKIN BUCKLING                 1403.   3558.     5.529        -61.
STRINGER FORCED CRIPPLING     2911.   2208.   -14.108         32.
FRAME FORCED CRIPPLING        2911.   2269.   -12.305         28.
STRINGER EULER BUCKLING      18658.   1121.    -7.166       1564.
FRAME EULER BUCKLING        426591.   1303.    -7.066      32641.
STRINGER SKIN SEPARATION      2911.   2208.   -14.108         32.
FRAME SKIN SEPARATION         2911.   2269.   -12.305         28.
STRINGER STATIC COMPRESSN    15000.   2208.   -14.108        579.
FRAME STATIC COMPRESSION     15000.   2269.   -12.305        561.
SKIN TENSILE RUPTURE          4000.   2690.    20.970         49.

LOWEST MARGIN                       (%) =     28.
CRITICAL FAILURE STRAIN          (MICRO) =   2911.
CRITICAL FAILURE MODE                    = FRAME/SKIN SEPARATION
CRITICAL SHEAR LOAD              (LB/IN) =   1021.

1       CASE NUMBER:        1
        LOAD NUMBER:  3 OF  3
        NX         :   800.00
        NY         :      .00
        NXY        :   875.00

FAILURE ANALYSIS SUMMARY (AXIAL COMPRESSION)
--------------------------------------------

 FAILURE MODE          STRAIN  ---------TOTAL LOAD-----------  MARGINS
 -------- ---          (MICRO) (1000 LB)   (LB/IN)  (% STFNR)    (%)

SKIN  BUCKLING          1433.      14.0     1404.     83.73       8.6
EULER BUCKLING         10492.     102.8    10284.     93.30     694.9
STIFFENER CRIPPLING    12000.      47.9     4790.     93.71     498.7
STIFFENER/SKIN
         SEPARATION    12676.      50.5     5051.     93.87     531.4

AXIAL LOAD IN STIFFENER BEFORE BUCK (%) =   61.71
AXIAL LOAD IN STIFFENER AT FAILURE  (%) =   93.71
SINGLE BAY LOAD AT FAILURE   (LBS/INCH) = 4789.72

LOWEST MARGIN                       (%) =    499.
CRITICAL FAILURE STRAIN          (MICRO) =  12000.
CRITICAL FAILURE MODE                    = STIFFENER CRIPPLING
CRITICAL AXIAL COMPRESSION LOAD (LB/IN) =   4790.

FAILURE ANALYSIS SUMMARY (SHEAR LOAD ONLY)
------------------------------------------

APPLIED SHEAR FLOW NXY          (LB/IN) =  875.00
SKIN SHEAR BUCKLING NXYCR       (LB/IN) =  218.20
SKIN SHEAR BUCK STRAIN          (MICRO) =  887.20
DIAGONAL TENSION FACTOR K               =    .666
DIAGONAL TENSION ANGLE ALPHA      (DEG) =  39.983
STIFFENER RIGIDITY MARGIN           (%) = 2218.61
```

Figure 15. Final Design of the Curved Composite Panel (Continued)

FAILURE MODE	STRAIN (MICRO) ALLOW	STRAIN (MICRO) ACTUAL	STRESS (KSI)	MARGINS (%)
SKIN BUCKLING	887.	3558.	3.497	-75.
STRINGER FORCED CRIPPLING	3564.	3082.	-19.695	16.
FRAME FORCED CRIPPLING	3564.	3449.	-18.705	3.
STRINGER EULER BUCKLING	18658.	1686.	-10.771	1007.
FRAME EULER BUCKLING	426591.	2132.	-11.565	19905.
STRINGER SKIN SEPARATION	3564.	3082.	-19.695	16.
FRAME SKIN SEPARATION	3564.	3449.	-18.705	3.
STRINGER STATIC COMPRESSN	15000.	3082.	-19.695	387.
FRAME STATIC COMPRESSION	15000.	3449.	-18.705	335.
SKIN TENSILE RUPTURE	4000.	2989.	23.583	34.

LOWEST MARGIN (%) = 3.
CRITICAL FAILURE STRAIN (MICRO) = 3564.
CRITICAL FAILURE MODE = FRAME/SKIN SEPARATION
CRITICAL SHEAR LOAD (LB/IN) = 897.

Figure 15. Final Design of the Curved Composite Panel (Concluded).

```
EFFECTIVE PANEL LENGTH FOR SKIN BUCKLING =   23.63
EFFECTIVE PANEL WIDTH  FOR SKIN BUCKLING =    9.63

COMPRESSION BUCKLING LOADS HAVE BEEN COMPUTED THRU
     SIMPLIFIED ANALYSIS, OBTAIN NXYCR FROM SS8:
     APPLIED NX ONLY  (NXCR)    =   -345.45
     APPLIED NY ONLY  (NYCR)    =   -342.54
     APPLIED NXY ONLY (NXYCR)   =    200.00 ASSUMED VALUE

BUCKLING LOADS AFTER USER ADJUSTMENT (IF ANY):
     APPLIED NX ONLY  (NXCR)    =   -345.00
     APPLIED NY ONLY  (NYCR)    =   -343.00
     APPLIED NXY ONLY (NXYCR)   =    260.00


1    CASE NUMBER:        1
     LOAD NUMBER:  1 OF  3
     NX          :   800.00
     NY          :      .00
     NXY         :      .00


     SKIN PROPERTIES:
     ----------------

        LAYUP     THICK   EX    EY   GXY  NUXY BUC STRAIN  BUC EFF
                  (IN)  (MSI) (MSI) (MSI)        (MICRO)  WIDTH(IN)

     100/  0/  0  .0500 10.30 10.30  3.85  .300     671.     9.63


     PROPERTIES OF STIFFENER ALONG X-AXIS
     ------------------------------------

     1111122222|8888899999
               3
               3
               3
          5    3    7
          5    3    7
          |4444|6666|

     ELE  ELE      ELE      ELE   ELE   ELE      EPS     EPS     EPS
     NO  WIDTH    LAYUP    THICK   EX    EA      BUCL    CRIP    ULT
          (IN)   0/45/90   (IN) (MSI) (M-LBS)   (* IN MICRO UNITS *)

     1    .000   0/  0/  0  .000   .00   .0000  99000.   5600.   5600.
     2    .750 100/  0/  0  .063 10.30   .4867   2781.   2781.   5600.
     3   1.250 100/  0/  0  .063 10.30   .8111   9093.   5600.   5600.
     4    .750 100/  0/  0  .063 10.30   .4867   2781.   2781.   5600.
     5    .000   0/  0/  0  .000   .00   .0000  99000.   5600.   5600.
     6    .000   0/  0/  0  .000   .00   .0000  99000.   5600.   5600.
     7    .000   0/  0/  0  .000   .00   .0000  99000.   5600.   5600.
     8    .000   0/  0/  0  .000   .00   .0000  99000.   5600.   5600.
     9    .000   0/  0/  0  .000   .00   .0000  99000.   5600.   5600.

     STIFFENER AXIAL STIFFNESS  "EA" (10**6 LBS) =   1.805
     STIFFENER MODULUS          "E " (10**6 PSI) =  10.418
     STIFFENER AREA             " A"     (IN**2) =   .1732
     NEUTRAL AXIS FROM SKIN OML "YBAR"      (IN) =    .695
     STIFFENER "EI" WRT N. AXIS (10**6 LB-IN**2) =    .428
     STIFFENER "GJ" TOR STIFF   (10**3 LB-IN**2) =    .882
     STIFFENER CRIPPLING STRAIN "ECRIP"  (MICRO) =   2781.
```

Figure 16. Initial Design of Curved Metal Panel.

```
PROPERTIES OF STIFFENER ALONG Y-AXIS
------------------------------------

1111122222|8888899999
          3
          3
          3
     5    3    7
     5    3    7
     |4444|6666|

ELE  ELE      ELE      ELE   ELE   ELE      EPS     EPS     EPS
NO  WIDTH    LAYUP    THICK   EX    EA      BUCL    CRIP    ULT
     (IN)   0/45/90   (IN) (MSI) (M-LBS)   (* IN MICRO UNITS *)

1    .000   0/  0/  0  .000   .00   .0000  99000.   5600.   5600.
2    .750 100/  0/  0  .063 10.30   .4867   2781.   2781.   5600.
3   1.380 100/  0/  0  .063 10.30   .8955   7460.   5600.   5600.
4    .750 100/  0/  0  .063 10.30   .4867   2781.   2781.   5600.
5    .000   0/  0/  0  .000   .00   .0000  99000.   5600.   5600.
6    .000   0/  0/  0  .000   .00   .0000  99000.   5600.   5600.
7    .000   0/  0/  0  .000   .00   .0000  99000.   5600.   5600.
8    .000   0/  0/  0  .000   .00   .0000  99000.   5600.   5600.
9    .000   0/  0/  0  .000   .00   .0000  99000.   5600.   5600.

STIFFENER AXIAL STIFFNESS  "EA" (10**6 LBS) =   1.889
STIFFENER MODULUS          "E " (10**6 PSI) =  10.413
STIFFENER AREA             " A"     (IN**2) =   .1814
NEUTRAL AXIS FROM SKIN OML "YBAR"      (IN) =    .761
STIFFENER "EI" WRT N. AXIS (10**6 LB-IN**2) =    .536
STIFFENER "GJ" TOR STIFF   (10**3 LB-IN**2) =    .924
STIFFENER CRIPPLING STRAIN "ECRIP"  (MICRO) =   2781.


PANEL PROPERTIES
----------------

NO OF STIFFENERS PARALLEL TO X-AXIS =       3
STIFFENER SPACING            (INCH) =   10.00
PANEL LENGTH                 (INCH) =   24.00
PANEL RADIUS                 (INCH) =   45.00
SINGLE BAY "EI"    (10**6 LB-IN**2) =   1.077
SINGLE BAY "EA"         (10**6 LBS) =   6.955


FAILURE ANALYSIS SUMMARY (AXIAL COMPRESSION)
--------------------------------------------

 FAILURE MODE          STRAIN  ---------TOTAL LOAD-----------  MARGINS
 ------------          (MICRO) (1000 LB)   (LB/IN)  (% STFNR)    (%)

SKIN  BUCKLING          671.       5.9      588.     48.86     -41.7
EULER BUCKLING         7961.      69.7     6974.     76.70     592.1
STIFFENER CRIPPLING    2781.       7.6      760.     66.05      -5.0
STIFFENER/SKIN
         SEPARATION    2781.       7.6      760.     66.05      -5.0

AXIAL LOAD IN STIFFENER BEFORE BUCK (%) =   25.95
AXIAL LOAD IN STIFFENER AT FAILURE  (%) =   66.05
SINGLE BAY LOAD AT FAILURE   (LBS/INCH) =  759.94


LOWEST MARGIN                       (%) =     -5.
CRITICAL FAILURE STRAIN          (MICRO) =   2781.
CRITICAL FAILURE MODE                    = STIFFENER/SKIN SEPARATION
CRITICAL AXIAL COMPRESSION LOAD (LB/IN) =    760.
```

Figure 16. Initial Design of Curved Metal Panel (Continued).

```
1        CASE NUMBER:        1
         LOAD NUMBER:  2 OF  3
         NX         :      .00
         NY         :      .00
         NXY        :   875.00


         FAILURE ANALYSIS SUMMARY (SHEAR LOAD ONLY)
         ------------------------------------------

         APPLIED SHEAR FLOW NXY          (LB/IN) =  875.00
         SKIN SHEAR BUCKLING NXYCR       (LB/IN) =  260.00
         SKIN SHEAR BUCK STRAIN          (MICRO) = 1350.65
         DIAGONAL TENSION FACTOR K               =    .548
         DIAGONAL TENSION ANGLE ALPHA      (DEG) =  41.138
         STIFFENER RIGIDITY MARGIN           (%) =  233.40

            FAILURE MODE                 STRAIN        STRESS     MARGINS
            ------------                (MICRO)         (KSI)        (%)
                                       ALLOW  ACTUAL

         SKIN BUCKLING                 1351.   4545.     5.200        -70.
         STRINGER FORCED CRIPPLING     2123.   3847.   -39.623        -45.
         FRAME FORCED CRIPPLING        2123.   3626.   -37.348        -41.
         STRINGER EULER BUCKLING      16265.   1026.   -10.571       1485.
         FRAME EULER BUCKLING        111941.    966.    -9.953      11484.
         STRINGER SKIN SEPARATION      2123.   3847.   -39.623        -45.
         FRAME SKIN SEPARATION         2123.   3626.   -37.348        -41.
         STRINGER STATIC COMPRESSN     5600.   3847.   -39.623         46.
         FRAME STATIC COMPRESSION      5600.   3626.   -37.348         54.
         SKIN TENSILE RUPTURE          5600.   2931.    29.645         91.

         LOWEST MARGIN                       (%) =    -45.
         CRITICAL FAILURE STRAIN          (MICRO) =   2123.
         CRITICAL FAILURE MODE                    = STRINGER/SKIN SEPARATION
         CRITICAL SHEAR LOAD              (LB/IN) =    577.


1        CASE NUMBER:        1
         LOAD NUMBER:  3 OF  3
         NX         :   800.00
         NY         :      .00
         NXY        :   875.00


         FAILURE ANALYSIS SUMMARY (AXIAL COMPRESSION)
         --------------------------------------------

          FAILURE MODE         STRAIN  ----------TOTAL LOAD ----------  MARGINS
          ------------         (MICRO) (1000 LB)   (LB/IN)  (% STFNR)    (%)

         SKIN  BUCKLING          671.       5.9      588.     48.86     -41.7
         EULER BUCKLING         7961.      69.7     6974.     76.70     592.1
         STIFFENER CRIPPLING    2781.       7.6      760.     66.05      -5.0
         STIFFENER/SKIN
                 SEPARATION     2781.       7.6      760.     66.05      -5.0

         AXIAL LOAD IN STIFFENER BEFORE BUCK (%) =   25.95
         AXIAL LOAD IN STIFFENER AT FAILURE  (%) =   66.05
         SINGLE BAY LOAD AT FAILURE   (LBS/INCH) =  759.94


         LOWEST MARGIN                       (%) =     -5.
         CRITICAL FAILURE STRAIN          (MICRO) =   2781.
         CRITICAL FAILURE MODE                    = STIFFENER/SKIN SEPARATION
         CRITICAL AXIAL COMPRESSION LOAD (LB/IN) =    760.
```

Figure 16. Initial Design of Curved Metal Panel (Continued).

FAILURE ANALYSIS SUMMARY (SHEAR LOAD ONLY)

APPLIED SHEAR FLOW NXY	(LB/IN) =	875.00
SKIN SHEAR BUCKLING NXYCR	(LB/IN) =	185.42
SKIN SHEAR BUCK STRAIN	(MICRO) =	963.24
DIAGONAL TENSION FACTOR K	=	.656
DIAGONAL TENSION ANGLE ALPHA	(DEG) =	42.517
STIFFENER RIGIDITY MARGIN	(%) =	233.40

FAILURE MODE	STRAIN (MICRO) ALLOW	STRAIN (MICRO) ACTUAL	STRESS (KSI)	MARGINS (%)
SKIN BUCKLING	963.	4545.	3.708	-79.
STRINGER FORCED CRIPPLING	2395.	6019.	-61.991	-60.
FRAME FORCED CRIPPLING	2395.	5419.	-55.812	-56.
STRINGER EULER BUCKLING	16265.	1682.	-17.328	867.
FRAME EULER BUCKLING	111941.	1513.	-15.583	7299.
STRINGER SKIN SEPARATION	2395.	6019.	-61.991	-60.
FRAME SKIN SEPARATION	2395.	5419.	-55.812	-56.
STRINGER STATIC COMPRESSN	5600.	6019.	-61.991	-7.
FRAME STATIC COMPRESSION	5600.	5419.	-55.812	3.
SKIN TENSILE RUPTURE	5600.	3059.	30.925	83.

LOWEST MARGIN	(%) =	-60.
CRITICAL FAILURE STRAIN	(MICRO) =	2395.
CRITICAL FAILURE MODE	=	STRINGER/SKIN SEPARATION
CRITICAL SHEAR LOAD	(LB/IN) =	299.

Figure 16. Initial Design of Curved Metal Panel (Concluded).

```
EFFECTIVE PANEL LENGTH FOR SKIN BUCKLING =   23.25
EFFECTIVE PANEL WIDTH  FOR SKIN BUCKLING =    9.25

COMPRESSION BUCKLING LOADS HAVE BEEN COMPUTED THRU
     SIMPLIFIED ANALYSIS, OBTAIN NXYCR FROM SS8:
     APPLIED NX ONLY  (NXCR)    =   -546.76
     APPLIED NY ONLY  (NYCR)    =   -543.34
     APPLIED NXY ONLY (NXYCR)   =    200.00 ASSUMED VALUE

BUCKLING LOADS AFTER USER ADJUSTMENT (IF ANY):
     APPLIED NX ONLY  (NXCR)    =   -547.00
     APPLIED NY ONLY  (NYCR)    =   -543.00
     APPLIED NXY ONLY (NXYCR)   =    410.00


1    CASE NUMBER:        1
     LOAD NUMBER:  1 OF  3
     NX          :   800.00
     NY          :      .00
     NXY         :      .00


     SKIN PROPERTIES:
     ----------------

        LAYUP     THICK   EX    EY   GXY  NUXY BUC STRAIN  BUC EFF
                  (IN)  (MSI) (MSI) (MSI)        (MICRO)  WIDTH(IN)

     100/  0/  0  .0630 10.30 10.30  3.85  .300     843.     9.25


     PROPERTIES OF STIFFENER ALONG X-AXIS
     ------------------------------------

     1111122222|8888899999
               3
               3
               3
          5    3    7
          5    3    7
          |4444|6666|

     ELE  ELE      ELE      ELE   ELE   ELE      EPS     EPS     EPS
     NO  WIDTH    LAYUP    THICK   EX    EA      BUCL    CRIP    ULT
          (IN)   0/45/90   (IN) (MSI) (M-LBS)   (* IN MICRO UNITS *)

     1    .000   0/  0/  0  .000   .00   .0000  99000.   5600.   5600.
     2   1.500 100/  0/  0  .125 10.30  1.9312   3161.   3161.   5600.
     3   2.000 100/  0/  0  .125 10.30  2.5750  13983.   5600.   5600.
     4    .875 100/  0/  0  .125 10.30  1.1266   8193.   5600.   5600.
     5    .000   0/  0/  0  .000   .00   .0000  99000.   5600.   5600.
     6    .000   0/  0/  0  .000   .00   .0000  99000.   5600.   5600.
     7    .000   0/  0/  0  .000   .00   .0000  99000.   5600.   5600.
     8    .000   0/  0/  0  .000   .00   .0000  99000.   5600.   5600.
     9    .000   0/  0/  0  .000   .00   .0000  99000.   5600.   5600.

     STIFFENER AXIAL STIFFNESS  "EA" (10**6 LBS) =   5.713
     STIFFENER MODULUS          "E " (10**6 PSI) =  10.447
     STIFFENER AREA             " A"     (IN**2) =   .5469
     NEUTRAL AXIS FROM SKIN OML "YBAR"      (IN) =    .990
     STIFFENER "EI" WRT N. AXIS (10**6 LB-IN**2) =   3.337
     STIFFENER "GJ" TOR STIFF   (10**3 LB-IN**2) =  10.966
     STIFFENER CRIPPLING STRAIN "ECRIP"  (MICRO) =   5600.
```

Figure 17. Final Design of Curved Metal Panel.

```
PROPERTIES OF STIFFENER ALONG Y-AXIS
------------------------------------

1111122222|8888899999
          3
          3
          3
     5    3    7
     5    3    7
     |4444|6666|

ELE  ELE      ELE      ELE   ELE   ELE      EPS     EPS     EPS
NO  WIDTH    LAYUP    THICK  EX    EA      BUCL    CRIP    ULT
     (IN)   0/45/90   (IN) (MSI) (M-LBS)   (* IN MICRO UNITS *)

1    .000   0/  0/  0  .000   .00   .0000  99000.   5600.   5600.
2   1.500 100/  0/  0  .125 10.30  1.9312   3161.   3161.   5600.
3   2.000 100/  0/  0  .125 10.30  2.5750  13983.   5600.   5600.
4    .875 100/  0/  0  .125 10.30  1.1266   8193.   5600.   5600.
5    .000   0/  0/  0  .000   .00   .0000  99000.   5600.   5600.
6    .000   0/  0/  0  .000   .00   .0000  99000.   5600.   5600.
7    .000   0/  0/  0  .000   .00   .0000  99000.   5600.   5600.
8    .000   0/  0/  0  .000   .00   .0000  99000.   5600.   5600.
9    .000   0/  0/  0  .000   .00   .0000  99000.   5600.   5600.

STIFFENER AXIAL STIFFNESS  "EA" (10**6 LBS) =   5.713
STIFFENER MODULUS          "E " (10**6 PSI) =  10.447
STIFFENER AREA             " A"     (IN**2) =   .5469
NEUTRAL AXIS FROM SKIN OML "YBAR"      (IN) =    .990
STIFFENER "EI" WRT N. AXIS (10**6 LB-IN**2) =   3.337
STIFFENER "GJ" TOR STIFF   (10**3 LB-IN**2) =  10.966
STIFFENER CRIPPLING STRAIN "ECRIP"  (MICRO) =   5600.


PANEL PROPERTIES
----------------

NO OF STIFFENERS PARALLEL TO X-AXIS =       3
STIFFENER SPACING            (INCH) =   10.00
PANEL LENGTH                 (INCH) =   24.00
PANEL RADIUS                 (INCH) =   45.00
SINGLE BAY "EI"    (10**6 LB-IN**2) =   6.320
SINGLE BAY "EA"         (10**6 LBS) =  12.202


FAILURE ANALYSIS SUMMARY (AXIAL COMPRESSION)
--------------------------------------------

 FAILURE MODE         STRAIN  ---------TOTAL LOAD-----------  MARGINS
 ------------         (MICRO) (1000 LB)   (LB/IN)  (% STFNR)    (%)

SKIN  BUCKLING          843.      15.1     1510.     68.10      28.5
EULER BUCKLING        26626.     477.0    47701.     92.31    3961.2
STIFFENER CRIPPLING    5600.      37.8     3781.     84.63     372.6
STIFFENER/SKIN
         SEPARATION    3161.      22.4     2242.     80.53     180.3

AXIAL LOAD IN STIFFENER BEFORE BUCK (%) =   46.82
AXIAL LOAD IN STIFFENER AT FAILURE  (%) =   80.53
SINGLE BAY LOAD AT FAILURE   (LBS/INCH) = 2242.42


LOWEST MARGIN                       (%) =    180.
CRITICAL FAILURE STRAIN          (MICRO) =   3161.
CRITICAL FAILURE MODE                    = STIFFENER/SKIN SEPARATION
CRITICAL AXIAL COMPRESSION LOAD (LB/IN) =   2242.
```

Figure 17. Final Design of Curved Metal Panel (Continued).

```
1        CASE NUMBER:        1
         LOAD NUMBER:  2 OF  3
         NX         :      .00
         NY         :      .00
         NXY        :   875.00


         FAILURE ANALYSIS SUMMARY (SHEAR LOAD ONLY)
         ------------------------------------------

         APPLIED SHEAR FLOW NXY          (LB/IN) =  875.00
         SKIN SHEAR BUCKLING NXYCR       (LB/IN) =  410.00
         SKIN SHEAR BUCK STRAIN          (MICRO) = 1690.37
         DIAGONAL TENSION FACTOR K               =    .415
         DIAGONAL TENSION ANGLE ALPHA      (DEG) =  38.439
         STIFFENER RIGIDITY MARGIN           (%) =  938.28

            FAILURE MODE                  STRAIN        STRESS     MARGINS
            ------------                 (MICRO)         (KSI)        (%)
                                        ALLOW  ACTUAL

         SKIN BUCKLING                   1690.   3608.    6.508        -53.
         STRINGER FORCED CRIPPLING       2052.   1477.  -15.210         39.
         FRAME FORCED CRIPPLING          2052.   1345.  -13.854         53.
         STRINGER EULER BUCKLING        40035.    423.   -4.359       9360.
         FRAME EULER BUCKLING          230601.    385.   -3.970      59722.
         STRINGER SKIN SEPARATION        2052.   1477.  -15.210         39.
         FRAME SKIN SEPARATION           2052.   1345.  -13.854         53.
         STRINGER STATIC COMPRESSN       5600.   1477.  -15.210        279.
         FRAME STATIC COMPRESSION        5600.   1345.  -13.854        316.
         SKIN TENSILE R"PTURE            5600.   2197.   22.232        155.

         LOWEST MARGIN                       (%) =     39.
         CRITICAL FAILURE STRAIN         (MICRO) =   2052.
         CRITICAL FAILURE MODE                   = STRINGER/SKIN SEPARATION
         CRITICAL SHEAR LOAD             (LB/IN) =   1092.


1        CASE NUMBER:        1
         LOAD NUMBER:  3 OF  3
         NX         :   800.00
         NY         :      .00
         NXY        :   875.00


         FAILURE ANALYSIS SUMMARY (AXIAL COMPRESSION)
         --------------------------------------------

          FAILURE MODE         STRAIN  ---------TOTAL LOAD-----------  MARGINS
          ------------         (MICRO) (1000 LB)   (LB/IN)  (% STFNR)    (%)

         SKIN  BUCKLING          843.      15.1     1510.     68.10      28.5
         EULER BUCKLING        26626.     477.0    47701.     92.31    3961.2
         STIFFENER CRIPPLING    5600.      37.8     3781.     84.63     372.6
         STIFFENER/SKIN
                 SEPARATION     3161.      22.4     2242.     80.53     180.3

         AXIAL LOAD IN STIFFENER BEFORE BUCK (%) =   46.82
         AXIAL LOAD IN STIFFENER AT FAILURE  (%) =   80.53
         SINGLE BAY LOAD AT FAILURE   (LBS/INCH) = 2242.42


         LOWEST MARGIN                       (%) =    180.
         CRITICAL FAILURE STRAIN         (MICRO) =   3161.
         CRITICAL FAILURE MODE                   = STIFFENER/SKIN SEPARATION
         CRITICAL AXIAL COMPRESSION LOAD (LB/IN) =   2242.
```

Figure 17. Final Design of Curved Metal Panel (Continued).

FAILURE ANALYSIS SUMMARY (SHEAR LOAD ONLY)

APPLIED SHEAR FLOW NXY	(LB/IN) =	875.00
SKIN SHEAR BUCKLING NXYCR	(LB/IN) =	292.91
SKIN SHEAR BUCK STRAIN	(MICRO) =	1207.65
DIAGONAL TENSION FACTOR K	=	.563
DIAGONAL TENSION ANGLE ALPHA	(DEG) =	39.641
STIFFENER RIGIDITY MARGIN	(%) =	938.28

FAILURE MODE	STRAIN (MICRO) ALLOW	STRAIN (MICRO) ACTUAL	STRESS (KSI)	MARGINS (%)
SKIN BUCKLING	1208.	3608.	4.649	-67.
STRINGER FORCED CRIPPLING	2515.	2316.	-23.857	9.
FRAME FORCED CRIPPLING	2515.	2167.	-22.323	16.
STRINGER EULER BUCKLING	40035.	705.	-7.264	5576.
FRAME EULER BUCKLING	230601.	660.	-6.797	34844.
STRINGER SKIN SEPARATION	2515.	2316.	-23.857	9.
FRAME SKIN SEPARATION	2515.	2167.	-22.323	16.
STRINGER STATIC COMPRESSN	5600.	2316.	-23.857	142.
FRAME STATIC COMPRESSION	5600.	2167.	-22.323	158.
SKIN TENSILE RUPTURE	5600.	2348.	23.749	139.

LOWEST MARGIN	(%) =	9.
CRITICAL FAILURE STRAIN	(MICRO) =	2515.
CRITICAL FAILURE MODE	=	STRINGER/SKIN SEPARATION
CRITICAL SHEAR LOAD	(LB/IN) =	949.

Figure 17. Final Design of Curved Metal Panel (Concluded).

3.3 Design Demonstration

The purpose of this example is to illustrate the semi-empirical design procedure and other preliminary analysis required to develop postbuckled designs for practical structures subject to constraints dictated by adjacent structures. The demonstration study was conducted on a Mach 2.5 class advanced fighter fuselage component. The location and complexity of the structural subcomponent selected is shown in Figure 18. The stiffness critical inboard keel beam was selected for this design demonstration. The frame locations on this keel beam were determined by the adjacent structure. In particular, the inlet duct design criteria (hammershock) dictated the 18 inch frame spacing. The hat section stringer spacing of 9 inches was selected on the basis of a trade study that optimized the weight and the manufacturing cost of the inboard keel beam using preliminary manual analyses.

Detailed analysis and margin computations for this design, were conducted by a NASTRAN analysis for internal loads and a PBUKL analysis for the compression loaded regions of the inboard keel beam. The external loads distribution along the shaded fuselage section of Figure 18 is shown in Figure 19. The (N_x, N_y, N_{xy}) load triplets obtained from the NASTRAN analysis are shown in Figure 20. The design ultimate loads were determined as the average of the two highest shear and compression load elements. Thus the shear design ultimate load was 1070 lb/inch. The hat stringer, Z-frame and skin sizes for the final design are shown in Figure 21. The analysis summarized in Figure 21 shows that the critical failure mode was frame/skin separation and the zero margin ultimate shear load for this configuration was 1071 lb/in.

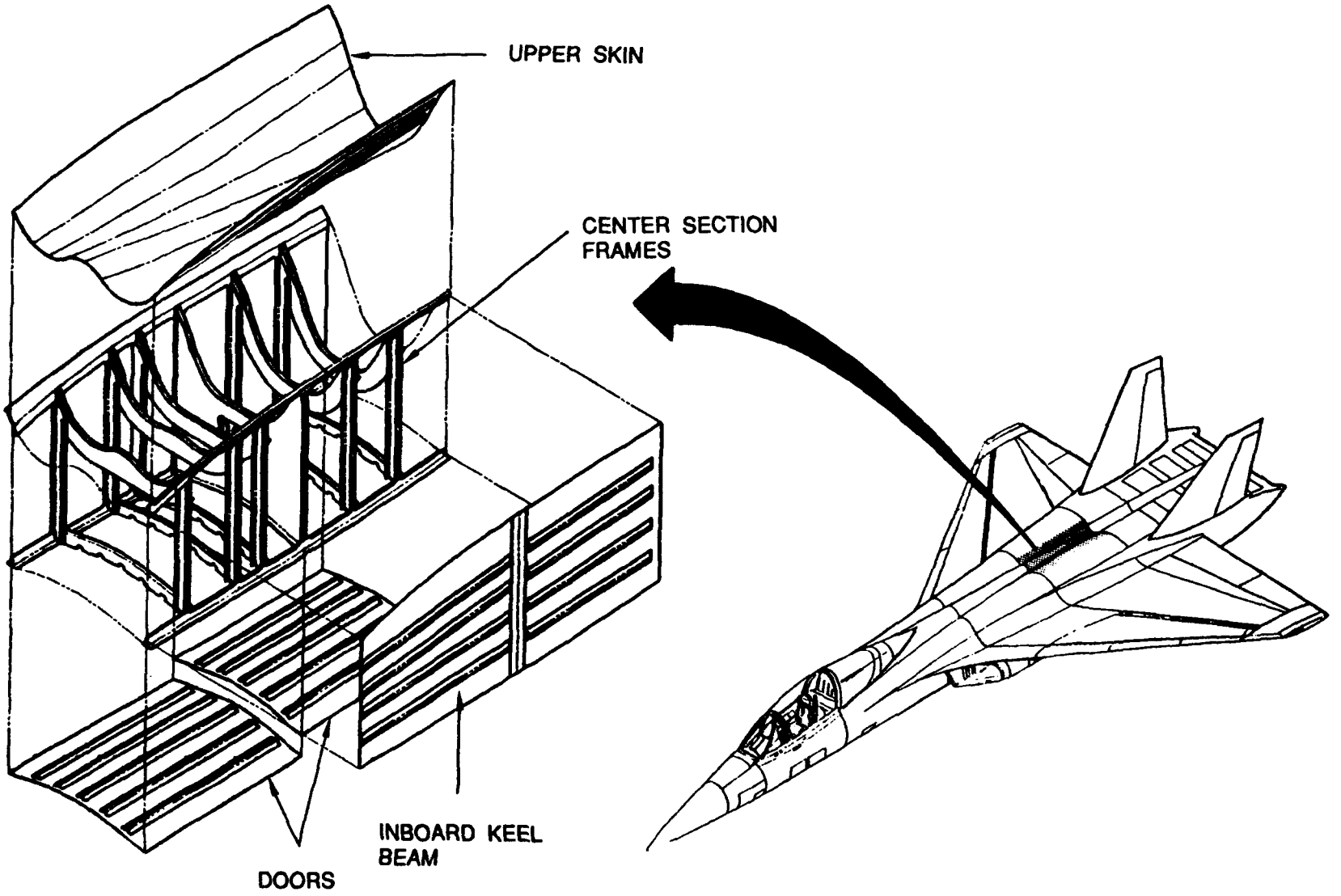

Figure 18. Location of the Inboard Keel Beam in the Mach 2.5 Advanced Fighter.

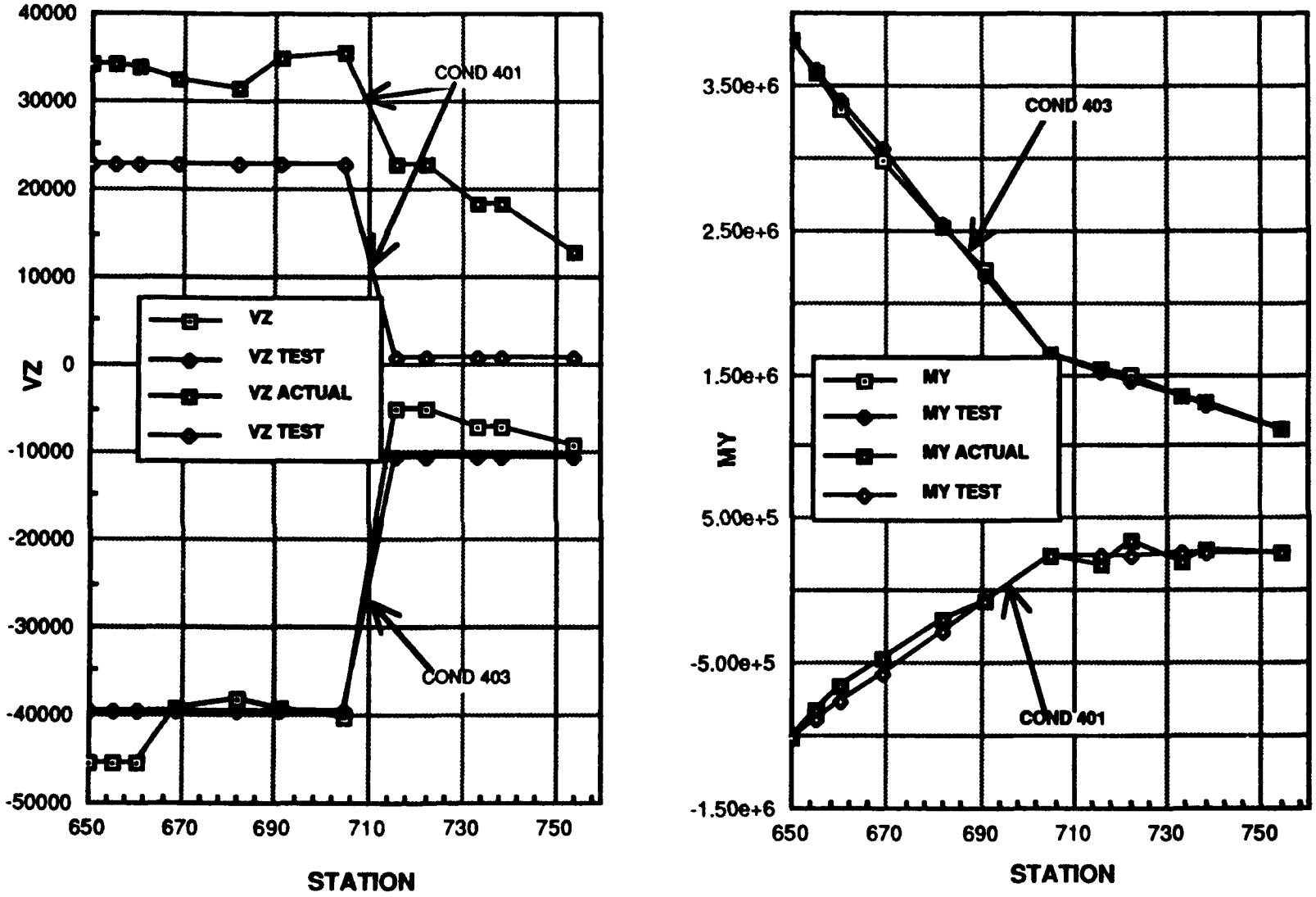

Figure 19. Vertical Shear and Bending Moment Distribution Along Aft Fuselage Center Section.

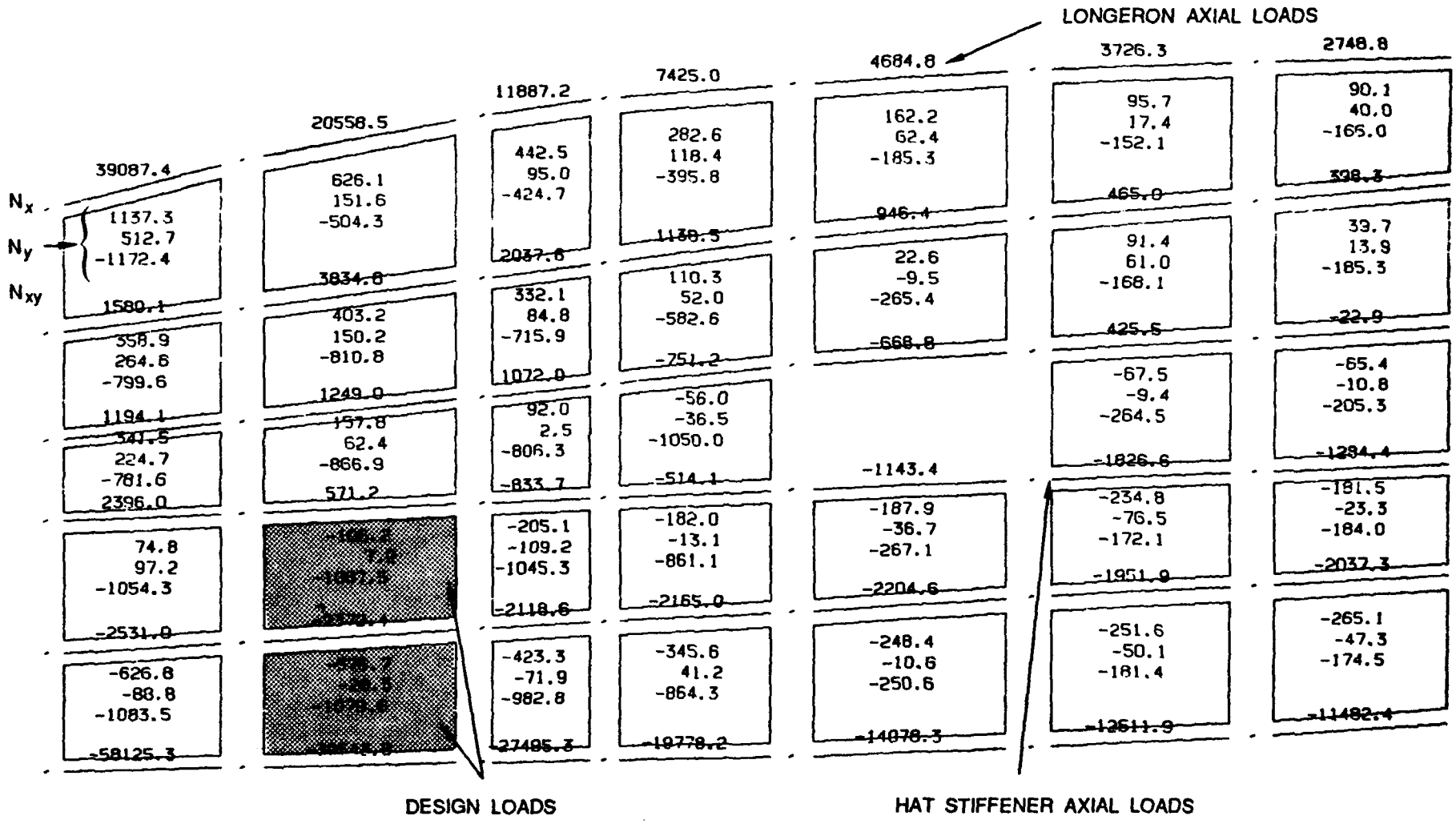

Figure 20. In-Plane Internal Loads Obtained from NASTRAN Analysis.

```
EFFECTIVE PANEL LENGTH FOR SKIN BUCKLING =   17.38
EFFECTIVE PANEL WIDTH  FOR SKIN BUCKLING =    6.62

COMPRESSION BUCKLING LOADS HAVE BEEN COMPUTED THRU
     SIMPLIFIED ANALYSIS, OBTAIN NXYCR FROM SS8:
     APPLIED NX ONLY  (NXCR)    =   -181.04
     APPLIED NY ONLY  (NYCR)    =    -47.76
     APPLIED NXY ONLY (NXYCR)   =    200.00 ASSUMED VALUE

BUCKLING LOADS AFTER USER ADJUSTMENT (IF ANY):
     APPLIED NX ONLY  (NXCR)    =   -185.00
     APPLIED NY ONLY  (NYCR)    =    -48.00
     APPLIED NXY ONLY (NXYCR)   =    210.00


1    CASE NUMBER:        1
     LOAD NUMBER:  1 OF  3
     NX          :   340.00
     NY          :      .00
     NXY         :      .00


     SKIN PROPERTIES:
     ----------------

        LAYUP     THICK   EX    EY   GXY  NUXY BUC STRAIN  BUC EFF
                  (IN)  (MSI) (MSI) (MSI)        (MICRO)  WIDTH(IN)

      16/ 66/ 16  .0624  6.03  6.03  3.43  .425     481.     6.62


     PROPERTIES OF STIFFENER ALONG X-AXIS
     ------------------------------------

     1111111114444444444411111111
              2          2
               2        2
                2      2
                 |3333|

     ELE  ELE      ELE      ELE   ELE   ELE      EPS     EPS     EPS
     NO  WIDTH    LAYUP    THICK   EX    EA      BUCL    CRIP    ULT
         (IN)    0/45/90   (IN) (MSI) (M-LBS)   (* IN MICRO UNITS *)

     1    .820  14/ 71/ 14  .146  5.64   .6733  21484.  15000.  15000.
     2    .852   0/100/  0  .062  2.78   .1476  63516.  15000.  15000.
     3    .750  36/ 63/  0  .099  8.60   .6373  56828.  15000.  15000.
     4   1.560  25/ 50/ 25  .083  7.26   .9420  11277.  11277.  15000.

     STIFFENER AXIAL STIFFNESS  "EA" (10**6 LBS) =   3.291
     STIFFENER MODULUS          "E " (10**6 PSI) =   5.995
     STIFFENER AREA             " A"     (IN**2) =   .5490
     NEUTRAL AXIS FROM SKIN OML "YBAR"      (IN) =    .299
     STIFFENER "EI" WRT N. AXIS (10**6 LB-IN**2) =    .410
     STIFFENER "GJ" TOR STIFF   (10**3 LB-IN**2) = 313.050
     STIFFENER CRIPPLING STRAIN "ECRIP"  (MICRO) =  15000.


     PROPERTIES OF STIFFENER ALONG Y-AXIS
     ------------------------------------

     1111122222|8888899999
              3
              3
              3
         5    3    7
         5    3    7
         |4444|6666|
```

Figure 21. Design Demonstration Example Analysis.

ELE NO	ELE WIDTH (IN)	ELE LAYUP 0/45/90	ELE THICK (IN)	ELE EX (MSI)	ELE EA (M-LBS)	EPS BUCL (* IN MICRO UNITS *)	EPS CRIP	EPS ULT
1	.000	0/ 0/ 0	.000	.00	.0000	99000.	15000.	15000.
2	1.250	25/ 50/ 25	.146	7.26	1.3210	6193.	6193.	15000.
3	3.500	25/ 50/ 25	.083	7.26	2.1136	2240.	3147.	15000.
4	1.250	25/ 50/ 25	.083	7.26	.7548	2355.	4071.	15000.
5	.000	0/ 0/ 0	.000	.00	.0000	99000.	15000.	15000.
6	.000	0/ 0/ 0	.000	.00	.0000	99000.	15000.	15000.
7	.000	0/ 0/ 0	.000	.00	.0000	99000.	15000.	15000.
8	.000	0/ 0/ 0	.000	.00	.0000	99000.	15000.	15000.
9	.000	0/ 0/ 0	.000	.00	.0000	99000.	15000.	15000.

```
STIFFENER AXIAL STIFFNESS  "EA" (10**6 LBS) =   4.215
STIFFENER MODULUS          "E " (10**6 PSI) =   7.302
STIFFENER AREA             " A"     (IN**2) =   .5772
NEUTRAL AXIS FROM SKIN OML "YBAR"      (IN) =   1.656
STIFFENER "EI" WRT N. AXIS (10**6 LB-IN**2) =   7.497
STIFFENER "GJ" TOR STIFF   (10**3 LB-IN**2) =   6.099
STIFFENER CRIPPLING STRAIN "ECRIP"  (MICRO) =   4071.


PANEL PROPERTIES
----------------

NO OF STIFFENERS PARALLEL TO X-AXIS =       2
STIFFENER SPACING            (INCH) =    9.00
PANEL LENGTH                 (INCH) =   18.00
PANEL RADIUS                 (INCH) =99999.00
SINGLE BAY "EI"    (10**6 LB-IN**2) =    .561
SINGLE BAY "EA"         (10**6 LBS) =   6.679


FAILURE ANALYSIS SUMMARY (AXIAL COMPRESSION)
--------------------------------------------
```

FAILURE MODE	STRAIN (MICRO)	TOTAL LOAD (1000 LB)	(LB/IN)	(% STFNR)	MARGINS (%)
SKIN BUCKLING	481.	4.8	533.	61.80	5.0
EULER BUCKLING	7680.	76.6	8507.	86.60	1576.1
STIFFENER CRIPPLING	15000.	54.8	6093.	90.03	1692.0
STIFFENER/SKIN SEPARATION	15000.	54.8	6093.	90.03	1692.0

```
AXIAL LOAD IN STIFFENER BEFORE BUCK (%) =   49.28
AXIAL LOAD IN STIFFENER AT FAILURE  (%) =   90.03
SINGLE BAY LOAD AT FAILURE   (LBS/INCH) = 6092.78


LOWEST MARGIN                       (%) =   1692.
CRITICAL FAILURE STRAIN          (MICRO) =  15000.
CRITICAL FAILURE MODE                    = STIFFENER/SKIN SEPARATION
CRITICAL AXIAL COMPRESSION LOAD (LB/IN) =   6093.


1       CASE NUMBER:        1
        LOAD NUMBER:  2 OF  3
        NX         :      .00
        NY         :      .00
        NXY        :  1070.00
```

Figure 21. Design Demonstration Example Analysis (Continued).

58

FAILURE ANALYSIS SUMMARY (SHEAR LOAD ONLY)

APPLIED SHEAR FLOW NXY	(LB/IN) =	1070.00
SKIN SHEAR BUCKLING NXYCR	(LB/IN) =	210.00
SKIN SHEAR BUCK STRAIN	(MICRO) =	980.35
DIAGONAL TENSION FACTOR K	=	.340
DIAGONAL TENSION ANGLE ALPHA	(DEG) =	43.510
STIFFENER RIGIDITY MARGIN	(%) =	5804.49

FAILURE MODE	STRAIN (MICRO) ALLOW	STRAIN (MICRO) ACTUAL	STRESS (KSI)	MARGINS (%)
SKIN BUCKLING	980.	4995.	3.365	-80.
STRINGER FORCED CRIPPLING	1988.	1484.	-8.702	34.
FRAME FORCED CRIPPLING	2199.	2085.	-15.130	5.
STRINGER EULER BUCKLING	15195.	662.	-3.879	2197.
FRAME EULER BUCKLING	867003.	628.	-4.555	138048.
STRINGER SKIN SEPARATION	1988.	1484.	-8.702	34.
FRAME SKIN SEPARATION	2199.	2085.	-15.130	5.
STRINGER STATIC COMPRESSN	11500.	1484.	-8.702	675.
FRAME STATIC COMPRESSION	11500.	2085.	-15.130	452.
SKIN TENSILE RUPTURE	6600.	3054.	25.320	116.

LOWEST MARGIN	(%) =	5.
CRITICAL FAILURE STRAIN	(MICRO) =	2199.
CRITICAL FAILURE MODE	=	FRAME/SKIN SEPARATION
CRITICAL SHEAR LOAD	(LB/IN) =	1116.

1 CASE NUMBER: 1
LOAD NUMBER: 3 OF 3
NX : 340.00
NY : .00
NXY : 1070.00

FAILURE ANALYSIS SUMMARY (AXIAL COMPRESSION)

FAILURE MODE	STRAIN (MICRO)	TOTAL LOAD (1000 LB)	TOTAL LOAD (LB/IN)	TOTAL LOAD (% STFNR)	MARGINS (%)
SKIN BUCKLING	481.	4.8	533.	61.80	5.0
EULER BUCKLING	7680.	76.6	8507.	86.60	1576.1
STIFFENER CRIPPLING	15000.	54.8	6093.	90.03	1692.0
STIFFENER/SKIN SEPARATION	15000.	54.8	6093.	90.03	1692.0

AXIAL LOAD IN STIFFENER BEFORE BUCK (%)	=	49.28
AXIAL LOAD IN STIFFENER AT FAILURE (%)	=	90.03
SINGLE BAY LOAD AT FAILURE (LBS/INCH)	=	6092.78

LOWEST MARGIN	(%) =	1692.
CRITICAL FAILURE STRAIN	(MICRO) =	15000.
CRITICAL FAILURE MODE	=	STIFFENER/SKIN SEPARATION
CRITICAL AXIAL COMPRESSION LOAD	(LB/IN) =	6093.

FAILURE ANALYSIS SUMMARY (SHEAR LOAD ONLY)

APPLIED SHEAR FLOW NXY	(LB/IN) =	1070.00
SKIN SHEAR BUCKLING NXYCR	(LB/IN) =	175.51
SKIN SHEAR BUCK STRAIN	(MICRO) =	819.36
DIAGONAL TENSION FACTOR K	=	.374
DIAGONAL TENSION ANGLE ALPHA	(DEG) =	43.583
STIFFENER RIGIDITY MARGIN	(%) =	5804.49

Figure 21. Design Demonstration Example Analysis (Continued)

FAILURE MODE	STRAIN (MICRO) ALLOW	STRAIN (MICRO) ACTUAL	STRESS (KSI)	MARGINS (%)
SKIN BUCKLING	819.	4995.	2.813	-84.
STRINGER FORCED CRIPPLING	2118.	1742.	-10.212	22.
FRAME FORCED CRIPPLING	2343.	2341.	-16.988	0.
STRINGER EULER BUCKLING	15195.	786.	-4.608	1833.
FRAME EULER BUCKLING	867003.	713.	-5.177	121448.
STRINGER SKIN SEPARATION	2118.	1742.	-10.212	22.
FRAME SKIN SEPARATION	2343.	2341.	-16.988	0.
STRINGER STATIC COMPRESSN	11500.	1742.	-10.212	560.
FRAME STATIC COMPRESSION	11500.	2341.	-16.988	391.
SKIN TENSILE RUPTURE	6600.	3110.	25.786	112.

LOWEST MARGIN (%) = 0.
CRITICAL FAILURE STRAIN (MICRO) = 2343.
CRITICAL FAILURE MODE = FRAME/SKIN SEPARATION
CRITICAL SHEAR LOAD (LB/IN) = 1071.

Figure 21. Design Demonstration Example Analysis (Concluded).

REFERENCES

1. Deo, R.B., Agarwal, B.L., Madenci, E., "Design Methodology and Life Analysis of Postbuckled Metal and Composite Panels," Final Report, Volume I, Contract F33615-81-C-3208, August 1985.

2. Deo, R.B., and Kan, H.P., "Design Development and Durability Validation of Postbuckled Composite and Metal Panels," Final Report, Volume V, Automated Data Systems Documentation, Contract F33615-84-C-3220, WRDC-TR-89-3030, November 1989.

3. Deo, R.B., Kan, H.P., and Bhatia, N.M., "Design Development and Durability Validation of Postbuckled Composite and Metal Panels", Final Report Volume III - Analysis and Test Results, WRDC-TR-89-3030, Contract F33615-84-C-3220, November 1989.

4. Agarwal, B., and Davis, R.C., "Minimum Weight Designs for Hat Stiffened Composite Panels Under Uniaxial Compression," NASA TND-7779, November 1974.

5. Williams, J.G., and Mikulas, M.M., "Analytical and Experimental Study of Structurally Efficient Composite Hat-Stiffened Panels Loaded in Axial Compression," NASA-TMX-72813, January 1976.

6. Williams, J.G., and Stein, M., "Buckling Behavior and Structural Efficiency of Open-Section Stiffened Composite Compression Panels," AIAA Journal, Volume 14, No. 11, November 1976, pp. 1618-1626.

7. Stroud, W.J., Agranoff, N., and Anderson, M.S., "Minimum Mass Design of Filamentary Composite Panels Under Combined Loads: Design Procedure Based on Rigorous Buckling Analysis," NASA TND-8417, July 1977.

8. Wilkins, D.J., "Anisotropic Curved Panel Analysis," General Dynamics, Convair Aerospace Division Report FZM-5567, May 1973.

9. Bruhn, E.F., "Analysis and Design of Flight Vehicle Structures," 1973.

10. Deo, R.B., Bhatia, N.M., and Kan, H.P., "Design Development and Durability Validation of Postbuckled Composite and Metal Panels," Final Report Volume II - Test Results, WRDC-TR-89-3030, Contract F33615-84-C-3220, November 1989.