(2)

NAVAL POSTGRADUATE SCHOOL

Monterey, California

AD-A248 294

DTIC
ELECTE
APR 07 1992
S D
D

THESIS

COMMAND AND CONTROL ARCHITECTURE
FOR
MULTI-NATIONAL OPERATIONS

by

Darren L. Turner

March, 1992

Thesis Advisor: Carl R. Jones

Approved for public release; distribution is unlimited

92-08907

92 4 06 168

UNCLASSIFIED
SECURITY CLASSIFICATION OF THIS PAGE

REPORT DOCUMENTATION PAGE

1a. REPORT SECURITY CLASSIFICATION UNCLASSIFIED	1b. RESTRICTIVE MARKINGS
2a. SECURITY CLASSIFICATION AUTHORITY	3. DISTRIBUTION/AVAILABILITY OF REPORT Approved for public release; distribution is unlimited.
2b. DECLASSIFICATION/DOWNGRADING SCHEDULE	
4 PERFORMING ORGANIZATION REPORT NUMBER(S)	5 MONITORING ORGANIZATION REPORT NUMBER(S)
6a NAME OF PERFORMING ORGANIZATION Naval Postgraduate School 6b. OFFICE SYMBOL *(If applicable)* CC	7a. NAME OF MONITORING ORGANIZATION Naval Postgraduate School
6c. ADDRESS *(City, State, and ZIP Code)* Monterey, CA 93943-5000	7b. ADDRESS *(City, State, and ZIP Code)* Monterey, CA 93943-5000
8a. NAME OF FUNDING/SPONSORING ORGANIZATION 8b. OFFICE SYMBOL *(If applicable)*	9. PROCUREMENT INSTRUMENT IDENTIFICATION NUMBER
8c. ADDRESS *(City, State, and ZIP Code)*	10. SOURCE OF FUNDING NUMBERS Program Element No / Project No / Task No / Work Unit Accession Number

11. TITLE *(Include Security Classification)*
COMMAND AND CONTROL ARCHITECTURE FOR MULTI-NATIONAL OPERATIONS
UNCLASSIFIED

12. PERSONAL AUTHOR(S) DARREN L. TURNER

13a. TYPE OF REPORT	13b. TIME COVERED	14 DATE OF REPORT *(year, month, day)*	15. PAGE COUNT
Master's Thesis	From To	26 MARCH 1992	136

16 SUPPLEMENTARY NOTATION
The views expressed in this thesis are those of the author and do not reflect the official policy or position of the Department of Defense or the U.S. Government.

17. COSATI CODES			18. SUBJECT TERMS *(continue on reverse if necessary and identify by block number)*
FIELD	GROUP	SUBGROUP	Architecture, Decision Making, C2, C3, C3I, Command and Control

19 ABSTRACT *(continue on reverse if necessary and identify by block number)*

This thesis focuses on the baseline functions that have to be executed in order to coordinate multi-national forces. This thesis is descriptive in nature, describing a multi-national architecture that is one level removed from physical hardware. The author combines the Copernicus Architecture ideology with the Cooperative Engagement structure to develop a baseline architecture (template) that can be used as a checklist for individual unit coordination at the on-scene crisis level. This then allows the tactical unit the ability to coordinate with impromptu allies, without high level state participation to ensure coordination. The author concludes that the basline functions required by multi-national forces can be coordinated by a tactical on-scene commander, and that high level coordination is not necessary.

20. DISTRIBUTION/AVAILABILITY OF ABSTRACT ☒ UNCLASSIFIED/UNLIMITED ☐ SAME AS RPT ☐ DTIC USERS	21. ABSTRACT SECURITY CLASSIFICATION UNCLASSIFIED
22a NAME OF RESPONSIBLE INDIVIDUAL CARL R. JONES	22b. TELEPHONE *(Include Area code)* (408)646-2772 / 22c OFFICE SYMBOL CC

DD FORM 1473, 84 MAR — 83 APR edition may be used until exhausted. All other editions are obsolete — SECURITY CLASSIFICATION OF THIS PAGE
UNCLASSIFIED

Approved for public release; distribution is unlimited.

Command and Control Architecture for Multi-National Operations

by

Darren L. Turner
Lieutenant, United States Navy, 1987
B.S., United States Naval Academy

Submitted in partial fulfillment
of the requirements for the degree of

MASTER OF SCIENCE IN SYSTEMS TECHNOLOGY
(Command, Control, and Communications)

from the

NAVAL POSTGRADUATE SCHOOL
March 1992

Author: _____
Darren L. Turner

Approved by: _____
Carl R. Jones, Thesis Advisor

_____
Michael G. Sovereign, Second Reader

_____
Carl R. Jones, Chairman
Command, Control, and Communications Academic Group

ABSTRACT

This thesis focuses on the baseline functions that have to be executed in order to coordinate multi-national forces. This thesis is descriptive in nature, describing a multi-national architecture that is one level removed from physical hardware. The author combines the Copernicus Architecture ideology with the Cooperative Engagement structure to develop a baseline architecture (template) that can be used as a checklist for individual unit coordination at the on-scene crisis level. This then allows the tactical unit the ability to coordinate with impromptu allies, without high level state participation to ensure coordination. The author concludes that the baseline functions required by multi-national forces can be coordinated by a tactical on-scene commander, and that high level coordination is not necessary.

Accesion For
NTIS CRA&I
DTIC TAB
Unannounced
Justification
By
Distribution /
Availability Codes
Dist | Avail and / or Special
A-1

TABLE OF CONTENTS

I. INTRODUCTION 1

A. BACKGROUND 1

B. THE RESEARCH QUESTION 3

C. SCOPE 4

D. SUMMARY OF FINDINGS 5

E. ORGANIZATION OF THE STUDY 7

II HISTORICAL PERSPECTIVE 9

A. POST WWII TO VIETNAM 9

1. Beginning of Cold War 10

2. United States Navy Force Deployment Change 10

3. Korean War 12

4. Development of the Middle East Command . . 14

a. Defense of the Suez Canal 15

b. MEC Repackaged as the MEDO 15

5. Baghdad Pact 16

6. Eisenhower Doctrine 17

a. JCS Soviet Strategy Shifts 17

b. JCS Recommends an establishment of a Multiservice Unified Command for the Middle East Area 18

c. Kennedy USSTRICOM for Brushfire Wars . 18

7. Nixon Doctrine 19

B. POST VIETNAM TO PRE-DESERT SHIELD / STORM: THE ESTABLISHMENT OF CENTCOM 21

1. Rapid Deployment Joint Task Force (RDJTF) . 21

2. Central Command 22

C. CONCLUSION 23

III. CURRENT COMMAND AND CONTROL ARCHITECTURE 24

A. GENERIC ARCHITECTURE DEVELOPMENT PROCESS . . . 24

1. Components of an architecture 24

a. List of Customers 26

b. Concept of Operations 26

c. Measures of Performance 27

d. Interrelated Functional Flow Diagrams and Data Description 27

e. Physical Description 28

2. Architecture Integration 28

3. Principles of Architecture 29

a. Modularity 29

b. Connectivity 30

c. Simplicity 30

d. Economy 31

e. Correspondence 31

f. Continuity 31

g. Layering 32

h. Sustainability 32

i. Compatibility 33

B. CURRENT COMMAND AND CONTROL ARCHITECTURE . . . 33

C. LIABILITIES IN THE EXISTING ARCHITECTURE . . . 34

1. Flexibility of the doctrine to the threat . 35

2. Traffic Separation 36

3. Message Format and Form 36

4. System Inadequacies 37

5. Traffic Overload 38

6. Threat Flexibility 38

7. Information Display 39

D. IMPROVEMENTS TO THE SYSTEM 39

1. Copernicus 40

a. Global Information Exchange System (GLOBIXS) 41

b. CINC Command Center (CCC) 42

c. Tactical Data Information Exchange System (TADIXS) 43

d. The Tactical Command Center (TCC) . . . 44

2. Navy Cooperative Engagement Architecture . 45

3. Issues for Discussion 47

a. Functional 47

b. Physical 47

c. Organizational 48

IV. STRUCTURAL ANALYSIS 50

A. PROBLEM ANALYSIS 50

1. SHOR Paradigm 51

2. Object Orientation 53

B. INFORMATION AND DATA FLOWS 55

C. TIME CONSTRAINED FUNCTIONS 56

1. Observe 57

a. Generate the tactical picture 57

b. Maintain data 58

c. Characterize data 58

2. Assess 59

a. Conduct mission assessment 59

b. Assess plan effectiveness 60

c. Assess plan progress 61

d. Characterize the current situation . . 61

3. Plan 62

a. Define and Bound the mission 63

b. Development of alternative courses-of-action 64

c. Select plan of action 66

d. Plan generation with required updates . 66

4. Execute 68

a. Identify current courses-of-action . . 68

b. Schedule resources 69

c. Generate commands 69

V. GENERIC MULTI-NATIONAL FORCE ARCHITECTURE 70

A. SUMMARY OF INFORMATION AND DATA FLOWS 70

B. DATA/INFORMATION FUSION ARCHITECTURE DESIGN . . 72

1. Define System Level Requirements 73

2. System Functions 75

a. Force Posture 75

b. Data Base 76

c. Multi-National Architecture 78

3. Implementation of the Architecture 81

4. Architecture Evaluation 83

VI. CONCLUSION 87

A. GENERAL 87

B. TEMPLATE GENERATION 88

C. AREAS FOR FURTHER RESEARCH 89

D. COMBINED FORCES COORDINATION 89

APPENDIX A. 90

APPENDIX B. 115

LIST OF REFERENCES. 133

BIBLIOGRAPHY. 135

INITIAL DISTRIBUTION LIST 136

I. INTRODUCTION

"Coordination is the act of working together."

A. BACKGROUND

Every individual has an innate sense of what the phrase "well-coordinated" means. It is used to describe a winning sports team, a smoothly run political platform, and even military exercises. What we appear to be doing is simply noticing how well coordinated the actions of a group of individuals are. Often, however, good coordination is nearly invisible, while situations where coordination is obviously lacking are often in the spotlight. In the civilian sector we most easily spot poor coordination; for example: waiting for an airliner to run on time, while hotel reservations that we made months in advance disappear. Players and owners of a professional sports team sometimes communicate through the press. In the military poor coordination can also be administrative in nature; however, military operations that lack coordination can also mean the difference between life and death. This is not meant to be theatrical in nature, but to emphasize that coordination is needed in military operations.

In order to proceed with this thesis, it is helpful to have a more precise idea of what exactly is meant by

"coordination". Several definitions are listed below to help frame the position:

> "The operation of complex systems made up of components"
> (NSF-IRIS, 1989)
> "The joint efforts of independent communicating actors towards mutually defined goals."
> (NSF-IRIS, 1989)
> "Composing purposeful actions into larger purposeful wholes"
> (A. Holt, personal communication, 1989)

Although these suggested definitions of "coordination" help to clarify the problem military Command and Control systems are faced with, they are not conclusive. Each individual, as stated earlier, has his own opinion on the actual aspects of coordination. For this authors purposes, it is most useful to start with the simple definition that preceded this discussion:

"Coordination is the act of working together"

Even though it is often important to distinguish between concepts like cooperation, collaboration, and competition, including them all in this broad definition of coordination, allows us to examine their relationships.

Much of the previous background on combined operations focuses entirely on reports describing individual nations operating in a geographical or time oriented environment. By excluding the primary remaining divisional factor of Command and Control, that of a functional relationship, attained efficiency in a battlegroup is degraded. It is imperative that the United States learn to operate functionally with

other nations. World War II first identified the lack of coordination required to conduct multi-national operations; yet, even after a successful ending to the war, these Command and Control coordination problems were not fully analyzed.

This thesis focuses on gaining an understanding of the Command and Control basic functions that a Naval Force would need in order to operate, specifically in a multi-national arena. In addition to specifying these baseline functions, this thesis will also propose an architectural template to be used in such combined operations.

B. THE RESEARCH QUESTION

The basic question that guided this research involved the architecture that must be employed if multi-national operations are to be coherently successful. Specifically, the author created a Command and Control functional architecture template that would be used during battlegroup operations with one or more other countries. To conform to the current thinking incorporated within the hierarchy of the Navy, the author proposes an architecture modeled after the Copernicus Architecture currently being developed in the Navy, and the Navy Cooperative Engagement Architecture structure developed simultaneously. The author also addressed the information and data flows within the multi-national naval force, the interfaces between the information and data flow, and finally developed one possible map that allocated functions performed,

to the resource within the combined battlegroup. A secondary question covered in the development of the architecture was the validation of the template. To answer this question the author related fusion performance to military effectiveness by the Military Operations Research Society's Standards, discussing the dimensional parameters of the template, the Measures Of Performance (MOPs), Measures Of Effectiveness (MOEs), and Measures Of Force Effectiveness (MOFEs). To complete this question, recommendations for modeling of the template effectiveness by Command and Control models was given.

C. SCOPE

The domain of this thesis is the development of a multi-national command and control architecture for use in combined battlegroup operations. This thesis is generic and descriptive in nature, and concerns the ability of multi-national forces to operate efficiently in a functional division of warfare areas. Due to limited resources, the thesis does not test the validity of the template recommended, but gives suggestions for follow on research in order to validate the fidelity and accuracy of the template. The research for this subject was limited by a lack of published domain related data or research. The author also chose to remain at the unclassified level; thereby allowing for greater dissemination.

D. SUMMARY OF FINDINGS

The results of this thesis can best be summed up by the following statement:

> A Command, Control, Communications, Computers, and Intelligence system should be a fused, real time, ground truth picture of the warrior's battle space and the ability to order, respond and coordinate horizontally and vertically to the degree necessary to prosecute his warfighting mission in that battle space. (Macke, 1992)

The combined arena is one of the best environments in which to view this concept.

From this foundations of this idea, the author found that from the end of World War II to the present, including Operation Desert Shield / Storm, coordination of multi-national assets was conducted at a high level, and then passed down each individual countries chain-of-command; thus, negating individual unit coordination.

Each historical conflict that was briefly discussed did have a command and control architecture in place. This historical background provided the transition to the development of the current command and control architecture in place in the navy. By describing the components and principles of a generic architecture, as well as the integration of the architecture into physical reality, the author described the current command and control architecture, concentrating on the liabilities inherent to the system. The liabilities of the current architecture are,

- Flexibility of the doctrine to the threat
- Traffic separation
- Message format and form
- System inadequacies
- Traffic overload
- Threat flexibility
- Information display (Copernicus, 1991)

The author then discusses the Copernicus Architecture and the Cooperative Engagement structure, two new concepts in the development of a command and control architecture. In formulating the base template, Copernicus ideology is presented in a Cooperative Engagement structure.

Following discussion of the Copernicus architecture and the Cooperative Engagement structure, the author presents a detailed structural analysis of the problem. The Stimulus-Hypothesis-Option-Response (SHOR) model is presented in order to give the decision-maker the ability to deal with information input uncertainty and consequence-of-action uncertainty in military problem solving. After a brief discussion of object orientation, a structural analysis of the Command and Control arena concludes with information and data flows required in a battle group, and the necessary time constrained functions associated with these flows.

With the background material presented in the above fashion, the author presents a multi-national architecture

for implementation at the unit level. The architecture was formulated at just above physical hardware levels, in order to allow the decision-maker the flexibility to determine what resources are available for each basic function. In it, the decision-maker is given a set of mechanisms (resources) that have to act on the inputs to produce a desired output. Acting on those mechanisms, however, are a list of controls that give the decision-maker the guidelines for effective use of the resources available.

E. ORGANIZATION OF THE STUDY

In Chapter II the author discusses the historical background on Command and Control failures and success's, which in turn provide the foundations for understanding the process through the material, and the architectural template developed. Chapter III contains a general overview of an architecture, followed closely by the United States Navy's current Command and Control Architecture. The author then discusses the liability's in the existing system, and the proposed changes. Chapter III then ends with an summary evaluation of the current framework. Chapter IV follows the structural analysis used to determine the information and data flows required for combined operations, as well as the interfaces between them. The structured analysis was oriented towards the decision maker, using the Stimulus-Hypothesis-Option-Response (SHOR) model as a base for problem solving.

This model was selected because of its ability to deal explicitly with both information input uncertainty and consequence-of-action uncertainty in military problem solving. Chapter V is the heart of the thesis. This is the chapter where the author develops an architecture template that covers the multi-national arena, answering the primary research question, as well as recommending Command and Control Models to validate the template. Chapter VI contains the conclusions and consolidates the answers to the research questions. The required baseline functions are presented in Appendix A, and the detailed architectural template is given in Appendix B.

II HISTORICAL PERSPECTIVE

> Know the enemy and know yourself; in a hundred battles you will never be in peril. When you are ignorant of the enemy but know yourself, your chances of winning or losing are equal. If ignorant both of your enemy and of yourself, you are certain in every battle to be in peril.
>
> - Sun Tzu

A. POST WWII TO VIETNAM

At the end of World War II, the United States Navy experienced one of the most difficult periods of its history. The budgetary rigidness of the immediate postwar years, the belief of some observers that atomic weapons had made navies obsolete, and the absence of major opposing surface fleets elsewhere in the world, resulted in a drastic demobilization of the American Navy. This decline was halted abruptly by the onset of the Korean War and the concurrent national decision to rearm for the Cold War.

Accompanying the declining force levels following World War II was the enactment of the National Security Act in 1947. Under that act, the Navy became part of the newly formed National Military Establishment, while the Joint Chiefs of Staff received statutory recognition and authority to continue their direction of unified commands. (Cardwell, 1984, p.11)

1. Beginning of Cold War

The March 1947 Truman Doctrine is usually thought of as the start of the Cold War. However, the thrust of the Truman Doctrine program was directed at Middle Eastern states: Greece and Turkey. In 1950, a report prepared by the secretaries of state and defense was transmitted to the members of the National Security Council at the direction of President Harry Truman. The subject of the report was "United States Objectives and Programs for National Security," the shorthand title being NSC 68. In its conclusion the report stated:

> We must, by means of a rapid and sustained build-up of the political, economic, and military strength of the free world, and by means of an affirmative program intended to wrest the initiative from the Soviet Union, confront it with convincing evidence of the determination and ability of the free world to frustrate the Kremlin design of a world dominated by its will (Hagen, 1984, p. 304).

NSC 68 became the American blueprint for the next decade, the American plan for waging the Cold War: "for every consideration of devotion to our fundamental values and to our national security demands that we achieve our objectives by the strategy of the cold war, building up our military strength in order that it may not have to be used" (Hagen, 1984, p. 304).

2. United States Navy Force Deployment Change

In the Mediterranean, the force that eventually became known as the Sixth Fleet had its genesis in the immediate

post-World War II period. In the first months after the war Britain's Royal Navy maintained its traditional presence in the region, while a limited number of American Units operated in the western and central Mediterranean. In the spring of 1946, however, the United States indicated its growing concern with the eastern Mediterranean by sending USS Missouri (BB 62) to Turkey, a nation that appeared to be endangered by Soviet demands for joint control of the Turkish straits. That fall the aircraft carrier Franklin D. Roosevelt visited Greece, which faced a communist-led insurgency. Late in September of 1946, the Navy Department issued a statement indicating that naval deployments could be expected routinely throughout the Mediterranean. (Hagen, 1984, pp. 290-301)

The United States naval presence in the Mediterranean continued to expand as British capabilities declined and as American apprehension grew regarding the goals of the Soviet Union and its allies. Secretary of the Navy James Forrestal, one of the principle architects of America's postwar policy, indicated that the increase in United States naval activity to the Mediterranean was the desire to support American forces in Europe and to carry out American policy and diplomacy. Following President Harry S. Truman's offer of assistance to Greece and Turkey in 1947, the Navy provided military supplies and advice to those countries and made frequent cruises to Greek and Turkish waters. In late 1947, an American carrier was permanently assigned to the Mediterranean. The following

year brought an amphibious capability to the force. Strategically, operations in the eastern Mediterranean established an American naval presence on the southern flank of the Soviet sphere of influence in Eastern Europe. (Hagen, 1984, pp. 290-301)

Europe and the Far East were by no means the sole geographic areas of American naval interest following World War II. In the central pacific, where the front lines of the Japanese Empire had been located during the war, the Navy assumed the responsibility for the civil administration of the Trust Territory of the Pacific Islands until replaced by the department of the Interior in 1951. Throughout the late 1940s and into the next decade, naval surface, air, and submarine forces also deployed to the Arctic regions to resupply weather and defense installations, and to conduct exercises.

3. Korean War

On June 25, 1950, North Korean forces launched an invasion of South Korea across the 38th parallel. Two days later, President Truman directed naval forces in the far east to support South Korea and prevent offensive operations by either the Chinese Nationalist or Communist Forces in the area of the Formosa straits. On June 29, the first naval gunfire mission was conducted in support of the allies. The first part of July brought the appointment of General Douglas MacArthor as commander of the United States Forces assisting

the Republic of Korea. In addition to assuming the role of unified commander of United States Forces, General MacArthor also was appointed as United Nations commander over all the allied forces. (Cardwell, 1984, p.13) The command structure established to control the assets under the United Nations Command is shown in figure 2.1.

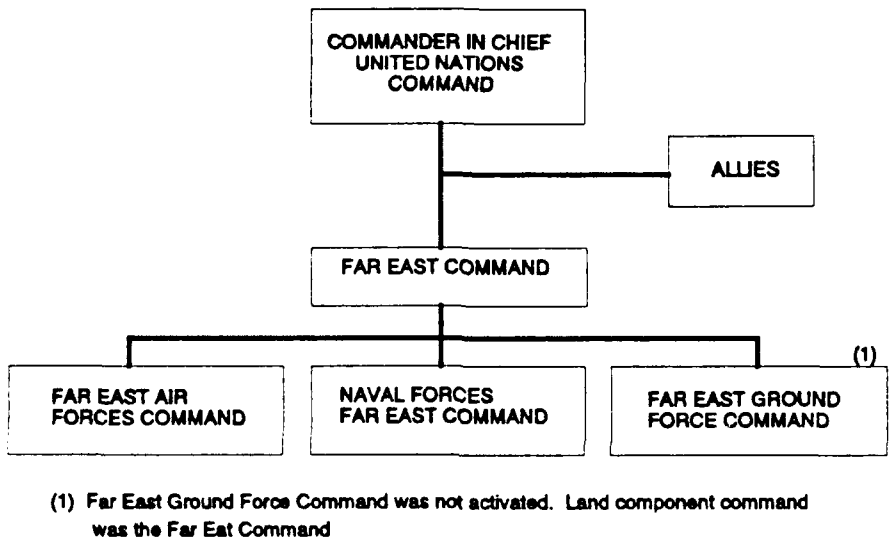

(1) Far East Ground Force Command was not activated. Land component command was the Far Eat Command

FIGURE 2.1: KOREA COMMAND ORGANIZATION (1950)

SOURCE: COMMAND STRUCTURE FOR THEATER WARFARE, THE QUEST FOR UNITY OF COMMAND

Although general in nature, figure 2.1 illustrates the lack of coordination between tactical units; therefore, depicting the problems of interaction that occurred.

Because of the United States domination of the United Nations Command, the command structure could be further amplified by figure 2.2.

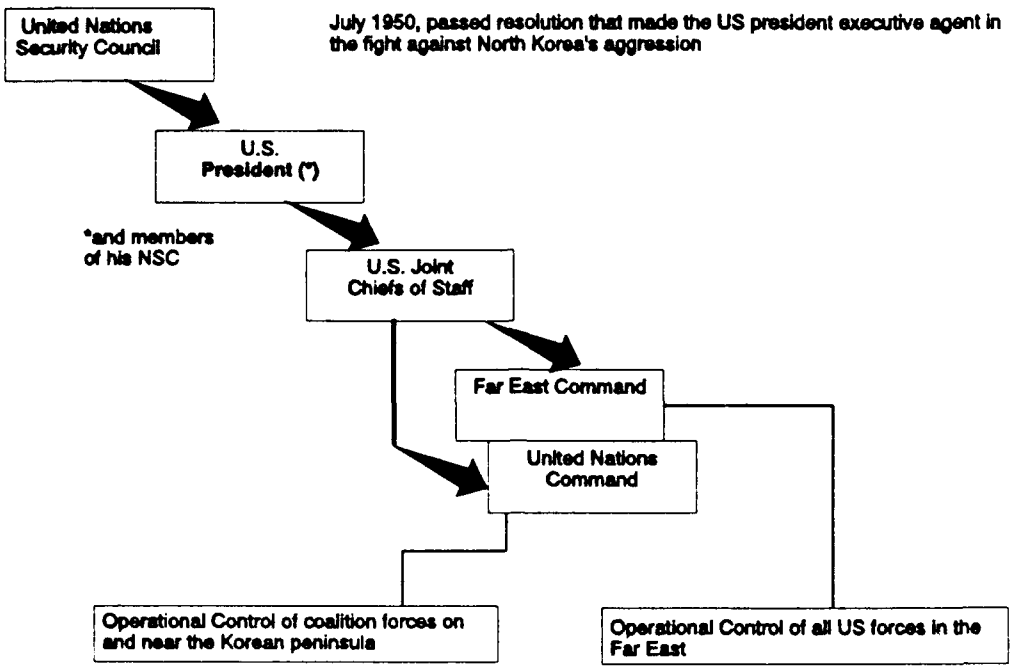

FIGURE 2.2: POLITICAL/STRATEGIC DIRECTION IN KOREA (1950)

SOURCE: COMMAND AND CONTROL OF THEATER FORCES: ISSUES IN MIDEAST COALITION COMMAND

As can be seen in figure 2.2, the entire thrust of the coalition is United States objectives, as the United States was called upon by the United Nations to act as commander of all forces in theater.

4. Development of the Middle East Command

The subregional focus of the October 1951 Middle East Command proposal was the defense of the Suez Canal Zone. The Middle East Command was not conceived of as a political alliance as in the case of the North Atlantic Treaty Organization. The concept was initially put forward as a proposal to Egypt, hoping that by converting the British

military presence into an allied enterprise that included Egypt; therefore allowing the coalition to keep a military installation on Egyptian soil. (Snyder, 1987, pp. 84-87)

a. Defense of the Suez Canal

The focus on the defense of the Canal Zone during the Middle East Command proposals was as much a result of explicit strategic planning as it was a function of Britain's political problems with the Egyptians. In fact, earlier, in March of 1951, the National Security Council had reestablished in NSC 47/5 that "because the United States commitments in other areas it is the United States' interest that the United Kingdom have primary responsibility for Israel and the Arab states" (Foreign Relations of the United States, 1951, p. 95). With NSC 47/5 American military plans called for almost no contributions for the defense of the Middle East. This remained true in 1952 when the Middle East Command (MEC) was repackaged as a less ambitious training and joint staff planning organization called the Middle East Defense Organization (MEDO).

b. MEC Repackaged as the MEDO

The American military establishment continually resisted any attempt in this period to give American combat units responsibilities in the Middle East. United States global war plans in 1952 did not contemplate the use of American forces in the region. General Omar Bradley viewed

United States participation in the Middle East security as largely symbolic: "The United States cannot send troops to the area...The United States, however, would be willing to contribute to the staff of a Middle East Defense Organization, largely as a means of securing the participation of others in such an arrangement" (Foreign Relations of the United States, 1952-1954, p. 246). It appears that the reason for this type of military thinking hinged on the idea that a war could still be won despite the loss of the Middle East, whereas the same could not be said for Europe.

5. Baghdad Pact

The United States military strategy in the Middle East under the Eisenhower administration was a product of two fundamental inputs; Secretary of State John Foster Dulles tour of the Middle East in 1953 and the "New Look" defense posture that the administration was implementing in Washington. Dulles concluded from his trip that the future focus of a regional defense must be on those states most directly threatened by the Soviet Union. The "New Look" posture was the idea of deterrence through air nuclear armament, as opposed to the more costly buildup of both nuclear and conventional forces.

Under these circumstances, the chances that the United States might assume a greater role in the defense of the Middle East, were slight. This served as one of the

inhibiting factors on American adherence to a series of treaties between Turkey, Iraq, Iran, Pakistan, and Great Britain in 1955 that became known as the Baghdad Pact. (Gold, 1988, p. 18)

6. Eisenhower Doctrine

Out of a concern for Soviet exploitation of the western vacuum in the Arab states, President Eisenhower addressed Congress on January 5, 1957 and called for a joint resolution authorizing economic and military aide as well as the use of United States armed forces in support of any Middle Eastern state faced with overt armed aggression from a country controlled by communism. This request was approved in March of 1957 and has become known as the Eisenhower Doctrine. (Snyder, 1987, pp. 85-86)

a. JCS Soviet Strategy Shifts

The Joint Chiefs of Staff had not been consulted before the declaration of the Eisenhower Doctrine, and only in its aftermath did they begin to consider its military applications. In the event of an extreme Soviet reaction to the president's statement, in the form of direct military aggression, the JCS noted that the result would be general war for which detailed plans existed. The danger existed, however, that a Middle Eastern state under Soviet influence might attack neighboring states, a scenario that no detailed plans existed for problem resolution.

b. JCS Recommends an establishment of a Multiservice Unified Command for the Middle East Area

As a result of the Doctrine, the JCS recommended the establishment of a multiservice unified command for the Middle East area (MECOM) that would assume responsibility for both strategic planning and coordination of military programs with local states. The Department of Defense implemented this idea by expanding the responsibilities of Commander-in-Chief of US Naval Forces Eastern Atlantic and Mediterranean (USCINCNELM). For the rest of the 1950's, USCINCNELM was both the component commander of the US European Command and Commander of US Specified Command. Early in 1960, CINCNELM was directed to establish unified multiservice staff for Middle Eastern planning separate from his exclusive naval staff. This arrangement, however, was only temporary. As soon as MECOM was established, they assumed this responsibility. (Gold, 1988, p. 22)

c. Kennedy USSTRICOM for Brushfire Wars

Although the idea was born under Eisenhower, the forces to support the Doctrine originated under the Kennedy administration. The results of the "New Look" program made the Kennedy-McNamara era lean toward a conventional arms buildup, as well as the increasing likelihood of Soviet-sponsored limited war threats to the Third World. In October 1961, Kennedy created a new unified command, the US Strike

Command (USSTRICOM),chiefly for operations in "brushfire" wars in the Third World. In 1963, STRICOM took over responsibility of the Middle East from CINCNELM. (Gold, 1988, pp. 22-23)

7. Nixon Doctrine

In October 1967, two years before Nixon came into office, he hinted at a strategy larger than the imposing problem in Vietnam. This strategy became known as the Nixon Doctrine. In it, Nixon warned that the Vietnam conflict had imposed severe strains on the United States and that there were serious questions whether the American public or the American Congress would support unilateral American intervention,even at the request of the host government. Although Asia provided the immediate context for Nixon's warning, the implications for other declared vital regions, such as the Middle East, were obvious. Nixon declared that two conditions would have to be met in the future if the United States was expected to respond to crises around the globe:

- a collective effort by the nations of the region to contain the threat by themselves
- a collective request to the United States for assistance, in the case that the first alternative failed (Gold, 1988, pp. 23-28)

Needless to say, the requirements outlined in 1967 were utilized during Desert Shield / Desert Storm.

Although there were only two forces allied in the campaign against the North Vietnamese, it is beneficial to the establishment of the coordination architecture to illustrate the combined command structure used in the war. The system for operational direction of the Vietnam war looked like figure 2.3.

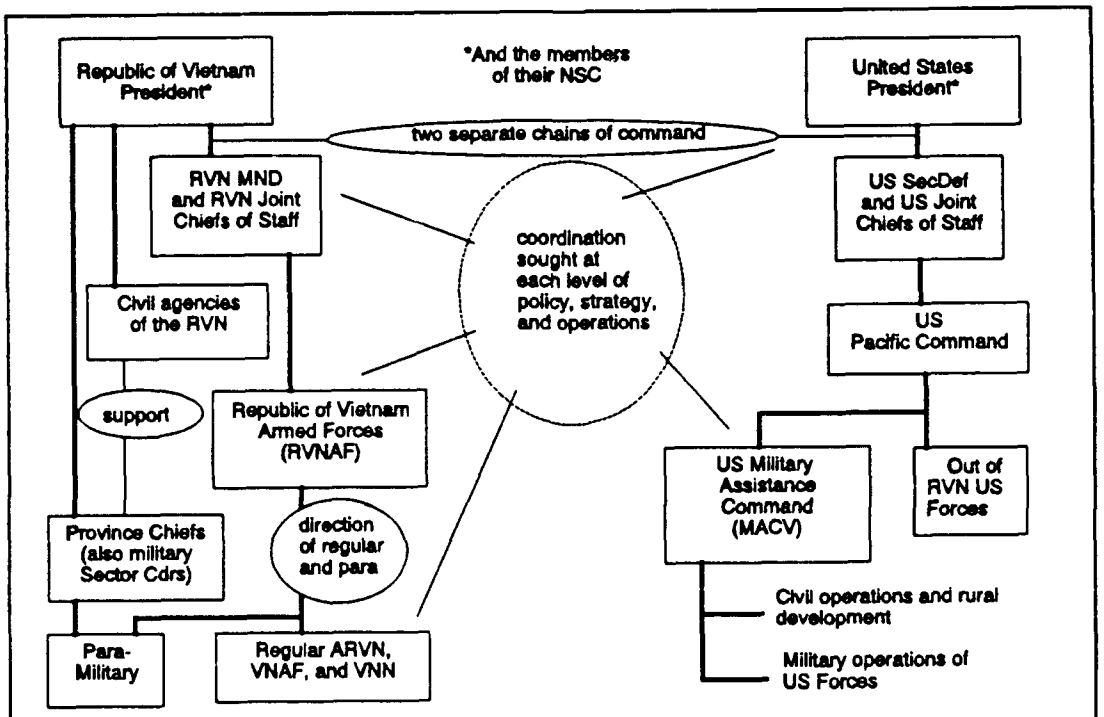

FIGURE 2.3: COMMAND AND CONTROL IN VIETNAM

SOURCE: COMMAND AND CONTROL OF THEATER FORCES: ISSUES IN MIDEAST COALITION COMMAND

Twenty five years after the end of World War II, and combined coordination of forces only became more inefficient.

B. POST VIETNAM TO PRE-DESERT SHIELD / STORM: THE ESTABLISHMENT OF CENTCOM

The growth of Soviet strategic nuclear power, the enhancement of Soviet conventional capability, and improvements in Soviet strategic mobility posed new challenges for the United States Military posture. In regard to the Middle East, strategic equivalence had created a situation where past policies of relying on the implied threat of escalating to general war for deterring direct Soviet attacks beyond the NATO area had become outdated. As a result, the National Security Council issued PD-18 in August 1977, which recommended a strategy of employing US general purpose forces in non-NATO situations. PD-18 also stipulated that these forces were to have the capabilities of operating independently of friendly basing and logistic support in the geographic area. (Gold, 1988, pp. 29-32)

1. Rapid Deployment Joint Task Force (RDJTF)

Defense guidance was issued for the formation of a new command after President Carter announced the formation of a Rapid Deployment Force in October of 1979. This new command was formally referred to as the RDJTF, and was headquartered at MacDill Air Force Base in Tampa, Florida. As the RDJTF concept took shape, the logistical difficulties of moving forces 12,000 nautical miles by sea and 8,000 nautical miles by air, became obvious. With this logistic nightmare facing

military planners, the Pentagon decided to alter the concept of the RDF to a force that could operate in a permissive environment, one that required some reliance on regional infrastructure (Snyder, 1987, pp. 116-117). Although the forces were a new commodity, the idea for reliance on regional countries had already been noted by President Nixon in 1967.

2. Central Command

The Department of Defense list of priorities for the RDJTF were as follows:

> (1) the security of Israel and the continuation of the peace process
>
> (2) support for the moderate states of Saudi Arabia,Oman, Jordan, and Egypt against overt attack by radical states
>
> (3) support for moderate states against internal disorders and subversion
>
> (4) the limitation of Soviet military influence/leverage in the region
>
> (5) deterrence of a Soviet invasion of the Gulf (Snyder, 1987, p. 117)

In order to be able to undertake these responsibilities, the Reagan administration upgraded the RDJTF in January 1983 to the first new geographic unified command. The commander of the RDJTF was now the commander of the US Central Command.

C. CONCLUSION

The background presented briefly from the close of World War II to the present is not intended to be a history lesson, but instead is designed to introduce the reader to some area's of conflict that have existed related to poor Command and Control coordination. In these multi-national conflicts, some form of a combined command and control architecture always existed. In fact, some of the historical aspects on how the United States Navy worked with other nations can be found in our current multi-national operations. Given this historical background, the current command and control architecture can be discussed.

III. CURRENT COMMAND AND CONTROL ARCHITECTURE

"...the loss of troop control in battle invariably leads to defeat."

-Lieutenant Colonel L. Titov, Soviet Army

A. GENERIC ARCHITECTURE DEVELOPMENT PROCESS

How complex or simple a structure is depends critically upon the way in which we describe it. Most of the complex structures found in the world are enormously redundant, and we can use this redundancy to simplify their description. But to use it, to achieve the simplification, we must find the right representation. The military command and control process is not exempt from this definition. When broken down into a base architecture, the manner in which the military operates follows a certain path; a path illustrated below.

1. Components of an architecture

To develop a new architecture for use in the multinational arena takes an understanding of what an architecture is, how the current command and control process is modeled, and what is on the drawing board for future use. The United States Navy has been in the process of composing these architectures for many years. When the Navy was small, this process was handled by a small staff knowledgeable of seamanship, strategy, and tactics. As the Navy expanded by

numbers as well as structure, the job became more and more difficult and complex. Different architectures have had their turn at containing the vast complexity of the Navy, but currently the focus is on Copernicus. Even with Copernicus in the forefront, the Cooperative Engagement architecture was developed at approximately the same time. (Cooperative Engagement, 1991, p.1) It is from these two architectures that the author has formulated an actual architecture of the fleet in 1994, if both policies are implemented.

The goals of a Command and Control architecture is to develop a collection of documents intended to accomplish the following:

- Collect basic information
- Describe the functional organization of the force using required operational functions (ROF's)
- Describe the physical organization of the force to the generic platform and major systems levels
- Describe connectivity and organization of the force
- Establish essential performance measures at force, platform, and system levels
- Describe the current performance and capability of the force
- Compare expected performance to Top Level Warfare Requirement's (TLWR's) and identify short-falls and overlaps
- Rank options relative to performance, affordability, etc.
- Identify required technological emphasis
- Relate current performance to TLWR's

- Transfer concepts to implementation (SPAW87A and Curtis, 1989, pp. 6-7)

In order to accomplish those items it is imperative that the subscriber knows and understands the components of an architecture.

a. List of Customers

To bound the problem, the architect must know the domain of influence. For the authors purpose, the List of Customers will be all those entities that use the architecture to allocate their resources to individual functions. In the case of Navy-wide improvement, not only must the problem be bounded, as stated above, but also adhered to by all involved. All too often a new and improved procedure is implemented only to be ignored at various levels, simply due to a high resistance to change.

b. Concept of Operations

Without a concept of operations the architect would be developing a bounded problem without a direction. A Concept of Operations is the verbal statement of a decision-maker's assumptions or intent in regard to an operation. The concept is designed to give an overall picture of the operation. It is included primarily for additional clarity of purpose. Given that direction, the operation can be given specific tasks.

c. *Measures of Performance*

Each resource available to the decision-maker is assigned a list of functions, which are required to be completed for task accomplishment; and, each function must have some Measure of Performance. The Measures of Performance are operational assessment measures. This allows the decision-maker to allocate functions to specific resources, and then monitor the resources progress. In addition to the Measures of Performance listed for the individual functions, the decision-maker might also have Measures of Effectiveness for the entire task and Measures of Force Effectiveness for the entire battle force. Measures of Effectiveness would be assessment measures associated with major force components, i.e., platforms, combat systems, weapon systems, and warfare systems. Measures of Force Effectiveness are assessment measures dictated by the Force Top Level Warfare Requirements.

d. *Interrelated Functional Flow Diagrams and Data Description*

To allocate the tasks to resources in a manner that can be easily monitored, the tasks are distributed in a functional flow diagram. A functional flow diagram, in this context, utilizes a function as a process by which data-information is transferred from an input to an output. After measuring the function outputs in a quantifiable unit of time, the functional flow diagram is developed. This allows for

individual data to have requirements and standard flow directions. Each element of data used as an input or "functionalized" to an output is described by its physical attributes. For this authors purpose, the $IDEF_0$ design was the most beneficial method available of demonstrating functional flow diagrams with inherent data descriptions, now being required by the Director of Defense Information.

e. Physical Description

Each resource must be physically described in the architecture. A physical description in the case of a ship platform would entail nationality, command and control nodes onboard, communication nets available, cryptologic keys available, and so forth. This ensures that no function is assigned to an inadequate resource. The main concept is covered by identifying each entities own capabilities.

2. Architecture Integration

Within this component guideline, the architecture must be integrated into the day to day operation of the Navy. Just the idea of change alone would create enormous amounts of friction. However, this is not the only aspect of integration that an architecture must endure to be implemented. Probably the hardest obstacle that a new system must pass through is cost and operational effectiveness analysis (COEA). It is the author's opinion that with technological backfitting a possible major cost increase, several architectures do not

even get off the drawing table due to the high cost of physically implementing the hardware. This enormous backfit cost came about because of the technological explosion, resulting in greater amounts of information flow. When the Navy was first organized, one of the few worries it had was how to build the ship. After awhile, the designers developed weapons to be placed on ships. This was soon followed by entire weapon systems being designed to go on ships. Before long, the entire ship had to be laid out prior to construction. Now, the Navy has reached the point that entire battle groups must first be laid out on paper before construction. This type of thinking allows for efficient battle force management, but is costly in the backfit arena.

3. Principles of Architecture

The development of an architecture contains certain attributes, the most important ones in the authors opinion are listed here.

a. Modularity

By allowing the system to operate as a loose federation of entities who have been assigned individual functions, the decision-maker has given himself the ability to be flexible. The idea of modularity is defined and used by the author as independent modules that focus on one task and are minimally connected to the other modules. With modularity, the author has allowed for the possibility of a

pooled interdependence, that is, the modules share a common data base or resource. The intent here is not to imply that the units should operate autonomously. Instead, it is more efficient when the units operate together as a well coordinated system.

b. Connectivity

Connectivity is defined as communication resources connecting nodes. It is characterized by information content, type of media, and essential performance criteria. It will consist of links, gateways, and networks. When working with two or more elements, this capability of the architecture provides essential communications services, between battle force entities, with a minimal amount of exploitable electronic exposure.

c. Simplicity

It is easy to say that the simplest architecture that works is the most desirable. For this thesis, simplicity will be defined as the clear, uncomplicated structure that can be employed by the resources and still accomplish all of the tasks. In real life, however, this is normally hard to achieve. Simplicity must be retained throughout implementation, use, modification, expansion, and reconfiguration of the entire force system. A system must be simple at the highest level, or it can not be expected to reduce to simplicity as the process continues.

d. Economy

Although this thesis does not delve into the acquisition process for the individual systems, the architecture must allow the achievement of the required battle force performance, as derived from the Top Level Warfare Requirement, within projected resource constraints. Economy, as seen by the author, is the process of acquiring the system through the most cost effective method, all the while meeting the Top Level System Requirements. These constraints are not limited to dollars, but also include manpower and raw material resources as well.

e. Correspondence

Correspondence in an architecture is defined, for the purposes of this thesis, to allow resources at each level to have the ability to communicate with other resources at every level. The system structure must be in accordance with the steady state functional responsibilities of the user command structure. As such, it must be complete in its correspondence to all levels within the system, including those compartmented by security. In addition, the multi-national arena must be aware of the language base that would be necessary for understanding each command.

f. Continuity

To ensure all entities are following the same concept of operations, there must be continuity of information

across battle force elements. Continuity, as used here, means essentially that entities use the same "rule book" to govern their operation. This allows for similar procedures to be used in similar circumstances, and also standardizes data presentation. This is basically so that any appropriate combination of information presented to a decision-maker, at any level in the system, is consistent with that information presented to another decision-maker somewhere else in the system.

g. Layering

The system must allow for a hierarchial disposition of command structure. Layering, defined for this thesis as the ability to follow a chain of command, permits this to happen. Layering thus allows the command structure to accomondate both primary and alternative mission areas in coordinated and autonomous modes of operation. Functions must be allocated so that there are multiple ways to achieve the equivalent result. Networking functions, in this layered method, allows retention of unity of command, and the flexibility to adapt to changes in the threat.

h. Sustainability

Sustainability is defined as the capability of military forces, units, weapons systems, equipments, and personnel to operate at a specified level of mission activity for a period of time. The key word inherent in this

definition is survive. The system must be able to sustain itself through all kinds of obstacles. To do this, the system must be in a high state of readiness, achieved through embedded self-test, on-line training, physical protection, and logistics support.

i. Compatibility

Most of the other principles of an architecture are generic, and can operate regardless of the nationality of the entities involved. Compatibility, however, requires that changes or additions to the battle force must be constructively operational with existing systems. Compatibility is the capability of two or more items or components of equipment or material to exist or function in the same system or environment without mutual interference. In a "come-as-you-are" coalition crisis situation, this could be tough; necessitating the need for common joining doctrine that would allow for fluid command and control force posture. (Wiersma, 1987)

B. CURRENT COMMAND AND CONTROL ARCHITECTURE

The primary fighting unit of the Navy is the multiple-ship carrier battle group. The collection of the units which comprise the force cannot remain rigid, as seen in the principles of an architecture discussed earlier. By sorting the units by element composition and warfare tasks, the force can be broken down into even smaller groups. An example of

this is the sorting of resources with anti-surface warfare capabilities in a different category than anti-submarine capable resources. This allows for a distinct pairing of resource to warfare area.

Warfare mission areas are broken down into two distinct groups, primary and supporting tasks. By dividing the warfare missions into these two groups, a logical division of resources takes place. The warfare areas have already been defined for our purposes. Defined primary warfare mission areas include Anti-Air Warfare, Anti-Surface Warfare, Anti-Submarine Warfare, Strike Warfare, and Space and Electronic Warfare. Defined support areas are Command, Control, and Communications, Intelligence, and battle force logistics. These warfare areas, by definition, are those areas responsible for a specific major phase or portion of naval warfare. Support mission areas provide sustenance across the boundaries of the primary warfare areas, and are not contained by one aspect of warfare. (Curtis, 1989, pp. 14-18)

C. LIABILITIES IN THE EXISTING ARCHITECTURE

There are areas, as might be expected, in the current architecture where capabilities are greater than needed to counter the existing threat, as well as areas where the architecture just does not measure up. Curtis (p. 19) calls these areas overlaps and shortfalls. The most important lesson from the history of naval warfare is not that better

technology prevails, but rather, the lesson learned is more direct - those who use technology better or he who can deny the other technology on which he depends, prevails. (Copernicus, 1991, p. 2-2)

1. Flexibility of the doctrine to the threat

"Flexibility of the current architecture to include the changing technology of weapon and command and control systems," states Copernicus (p. 2-8), "is the first of many functional shortfalls to the existing system." The problem is simple. The navy is trying to absorb the current threat into a doctrine that was established for a threat perceived some time ago. In fact, although the Composite Warfare Commander concept has undergone some minor changes since its conception, its focus has remained the same for the last forty years (Copernicus, 1991, p. 2-8). The world, and specifically the threat, has changed. In the post-Cold War era, Contingency and Low Objective Warfare (CALOW) threats will be diverse, task force elements will be both joint and allied, and the ends and means of each mission may be different. Technological advances may mean rapid, radical shifts of structured elements to various parts of the world, and it is from this point that the command and control architecture offered to the decision-maker must be more flexible than current systems.

2. Traffic Separation

Traffic separation between administration and operations in an increased operational tempo is difficult at best. Todays system does not allow the decision-maker to sort operational traffic from administrative traffic. This means that when the Navy goes to war, there are very few procedures to gain capacity to support the increased operational tempo. At its best, the Navy sets up a message screening board or imposes worldwide Minimize. The lack of traffic separation has been observed in most major exercises, as well as in Desert Storm. (Copernicus, 1991, pp. 2/8-10) The ability to decant different forms of traffic will be essential for the decision-maker of the future.

3. Message Format and Form

The information available is currently conveyed in a narrative format, in the form of paper. Message format style has been changed and the resulting effect is to cut down on the verbiage, but the paper copy is still prevalent. In consequence, the navy is communicating in a pre-television age. The communication channels in Desert Storm were practically the same type used in the North African campaigns fifty years ago; that is, they were narrative in nature. (Copernicus, 1991, p. 2-9) A practical example of this is the paperwork that surrounds an underway replenishment. When operating in the Mediterranean, a ship has to send a message

back to the beach in order to get the supply ship who is only 2000 yards away to give them supplies.

A decision-maker currently has to read the equivalent of all the editions of the *New York Times* in order to get all the information he needs, everyday. Then, he must remember what he saw on page 6, paragraph 15, line 4, and associate it with information gathered in other sections of the paper. This association is very important, simply because the originators of the traffic do not reside in the same building, and often have different views on the subject. (Copernicus, 1991, p 2-9)

4. System Inadequacies

Because the current system is so overwhelmed by narrative traffic and the diversity of sensors inputing information into the system, the procedures to control the traffic, as well as the equipment needed to send the traffic, are not efficient. All the traffic sent to the commander, will be received by the commander; however, operational traffic does not have a higher priority in the current system over administrative traffic, especially when both types of messages have the same category (i.e. flash, priority, routine). The traffic the satellite sends to the tactical commander is less a conscious operational decision, then an administrative decision to parcel out precious communications capacity.

5. Traffic Overload

There are several factors that come to mind when discussing traffic overload - the narrative format of the message, the lack of common display, navigational differences, a wide range of computer equipment and operating styles, and staff compromises. All of these factors influence the decision-maker via a variety of channels, and lead to a loss of operational perspective. Architecturally and operationally, the goal must be, according to Copernicus:

> "one emission sensed leads to one location report over one communications path to sea at one time"
> (Copernicus, 1991, p 2-10)

Communications loading should reflect the enemy's actions, our actions, and the system that reports to us. While the decision-maker cannot always control the enemy's actions, and it is not desirable to limit the second, the decision-maker can bring efficiencies to the third.

6. Threat Flexibility

In the post-Cold War analogy, the "big red machine" has apparently dissolved. With the Soviet collapse, the requirement to disseminate information about a host of other possible threats grew. This challenge goes beyond the wide-area, non-organic sensors, as well as data fusion, and addresses the following problem:

- Where is the threat?
- Who is an ally?

- What are the ally and threat intentions?

It is apparent, therefore, that the intelligence system is no longer just Navy, but also includes Government agencies, possibly multinational corporations, and news services. The world has become a diverse place with no real perceived enemy. The intelligence infrastructure must be powerful, flexible, and able to reach out for information quickly.

7. Information Display

It is interesting that this is a shortfall in our own system, when it is also an obstacle in the multi-national arena. The system must be able to display data more effectively and more efficiently, incorporating data file transfers into day to day operations. Eventually, these data file transfers, along with the associated image, must replace the message as the principle operational format. (Copernicus, 1991, pp. 2/1-12)

D. IMPROVEMENTS TO THE SYSTEM

There are two architectures that were developed simultaneously that address the shortfalls listed above. Copernicus, which has been adopted by the Navy and stresses an operator viewpoint at all levels, and the Navy Cooperative Engagement Architecture, which looks at the warfare missions to be conducted and the resources available for the mission. Both have the ability to be implemented by the Navy, if for no

other reason than to rid the service of "stove pipe" systems in both the joint and combined arenas.

1. Copernicus

The Copernicus Architecture is both a new C^4I architecture to replace our current system and an investment strategy that provides a programmatic basis to construct it over the next decade. The pillars of Copernicus are operated at the following force levels:

- The watchstander: The watchstander is supported through the employment of generic high-technology workstations, differentiable only by separate warfare software packages.
- The Navy Composite Warfare Commander: The CWC is supported through the employment of a series of virtual Tactical Data Information Exchange Systems (TADIXS). The number, nature, and structure are flexible, and are up to the decision-makers concept.
- The Joint Task Force Commander: This decision-maker will be supported through the TADIXS-GLOBIXS (Global Information Exchange System) exchange system. The key element to remember about this level is the amount of CALOW situations that occur, and that the on-scene commander will generally become this levels Copernicus node.
- The Shore Commander: The primary way this operator is supported is through GLOBIXS. The development of this high-technology command connectivity allows video, voice, data, and narrative to be passed to all echelons, across all services, to all allies, and across the spectrum of warfare (Copernicus, 1991, pp. 3/6-7).

It is an interactive framework of four pillars, which tie together the command and control process of the Composite Warfare Commander afloat, the Joint Task Force Commander and

the CINCs ashore, all the while supporting the "operator" at those four levels.

a. Global Information Exchange System (GLOBIXS)

The first pillar of the Copernicus Architecture consists of the GLOBIXS, the shore nets. The GLOBIXS will be a series of virtual sensor and analytic Defense Communication System (DCS) nets that will provide information management and information concentration, by acting as the shore gateways for specific reports to sea. GLOBIXS thus are constructed a little bit like interstate highways; they are limited-access, high-speed, thoroughfares. Additionally, GLOBIXS have connections among each other so that traffic may be diverted across several systems, as well as to the operating forces through a consolidated CINC Command Complex (CCC), the second pillar of the architecture. The GLOBIXS will, in effect, orbit around the second pillar. (Copernicus, 1991, pp. 4/1-12)

In today's architecture, roughly 33,000 commands ashore can send messages to sea at the whim and timing of the sender, not the receiver. The receiver (the operator) is thus inundated and robbed of critical communications capacity. Once Copernicus is in place, GLOBIXS, intersected and managed through the CCC, will form a limited-access information system with an operator who will have the capability to configure the requirements, not the sender. (Copernicus, 1991, pp. 4/12-23)

b. CINC Command Center (CCC)

The second pillar of the architecture serves as a gateway for communications to the Tactical Command Centers (TCCs). The CCC as envisioned in Copernicus, would include a number of existing organizations brought together technologically by common workstations and a common Local Area Network. The primary difference between GLOBIXS and CCC is that GLOBIXS is a horizontal aggregation of communities with common interests, while CCCs are vertical infrastructures. This capability will allow the system to restructure itself in the future. The actual physical structure of the CCC consists of six organizational building blocks:

(1) The Fleet Command Center (FCC)

(2) The Operations Watch Center, the heart of the architecture ashore

(3) The SEW center

(4) The Research Center

(5) The Joint Intelligence Center (JIC), consisting of the Fleet Intelligence Center, the Fleet Ocean Surveillance Information Center, and the Cryptologic Support Group

(6) The Theater ASW Center (Copernicus, 1991, pp. 5/1-14)

Undoubtedly, each CCC will be configured differently. This is welcome, however, because the system must be able to adapt to the commanders view, given the perceived threat.

c. *Tactical Data Information Exchange System (TADIXS)*

The CCC will share information with the Tactical Command Center (TCC), through a series of Tactical Data Information Exchange Systems. As per the doctrine of the Copernicus Architecture, the TADIXS nets are not physical but logical nets, established at the request and mix desired by the tactical commander. They are not to be considered as actual data bits of communications, but rather as functional subsets of operational, support, and sensor information that would be accomondated over dynamically managed communications pathways. The major immediate impact of TADIXS will be to eliminate the narrative format of the Navy operational message, instead moving towards binary data rates that could pass information as high resolution graphics and imagery. Also, like GLOBIXS, TADIXS will be virtual, allowing the CWC the flexibility to select the information which would best augment his command - sort of a command and control "his way" button. As stated earlier, one CWC's configuration might differ from another, even in the same theater; yet, it is this operational flexibility that is the heart of Copernicus, and is what will maintain its high rate of sustainability and survivability once implemented in the fleet.

TADIXS, Copernicus style, might be confused with the existing TADIXS A and the planned TADIXS B. Although the technical detail of Copernicus TADIXS is beyond the scope of

this thesis, there are four broad categories. First and foremost is the command and control of tactical battle forces. This command TADIXS is envisioned as multi-format, including video-teleconferencing. Second to Command TADIXS is Support TADIXS. In this category is the only form of TADIXS which has a narrative message pathway, that being NAVIXS. Direct Targeting TADIXS and Force Operations TADIXS complete the final two categories. (Copernicus, 1991, pp. 6/1-15)

d. The Tactical Command Center (TCC)

The fourth and final pillar of the Copernicus Architecture, this pillar uses the Tactical Command Center (TCC) to signify the actual Combat Information Centers of the tactical commander and his units. The TCC provides tactical displays, integrated information management, and accessibility to tactical communications to support Navy warfighting missions. In this section is also the required battle connectivity to unit, other force commanders, and the CCC. Seen another way, the TCC operates very similarly to the CCC. Both share a tactical picture, and connect the Navy to the Services and to allies, at the tactical as well as theater level. To achieve this interconnectivity, Local Area Networks will be established. Until multi-level security is achieved, the Special Intelligence and General Service traffic will have to be carried on separate LANs. (Copernicus, 1991, pp.7/1-10)

2. Navy Cooperative Engagement Architecture

Developed concurrently to the Copernicus concept, the cooperative engagement initiative is an attempt to overcome stand-alone sensor and weapon system limitations, especially when targets employ motion profiles and multi-spectral stealth measures of signature control. Moreover, changing technologies and emerging third-world capabilities present reduced response times, implying the need for a realtime surveillance and response capability available to the force at all times. To understand from what baseline the term "cooperative engagement" is being used, the following definition and purpose are stated.

> A warfighting capability designed to more adequately meet and defeat the threat, through the synergistic integration of distributed resources among two or more units. Its purpose will be to fight the force as an entity. (Cooperative Engagement, 1991, p. 19)

The cooperative engagement effort focused on the problem through an examination of seven parameters. They are:

(1) The time horizon

(2) Warfare areas

(3) Warfighting media

(4) Battle space

(5) Size of the fighting force

(6) Level of Architectural detail

(7) Performance assessment (Cooperative Engagement, 1991, pp. 4-6)

In the broadest sense, a conventional engagement is limited to resources available on the engaging platform. Engagement range is constrained as is depth of fire, firepower, and sensors. Cooperative Engagement used the basic functions of detect, control, and engage, and showed that the control and engage function are almost always accomplished by the shooter. If it were possible to share these functions among other platforms in the force, advocates the Cooperative Engagement Initiative, the constraints could be lifted. To accomplish this primary goal, the key elements were as follows:

- Fight the force as a whole
- Implement the full range of functionality available on one platform across multiple platforms
- Provide force level management
- Maximize force effectiveness through multi-dimensional and multi-source sensing
- Decentralize the process so that one loss does not negate the ability of the force to accomplish the mission
- Provide end-to-data communications from sensor to weapon (Cooperative Engagement, 1991, p. ES-3)

Cooperative Engagement becomes the structure for the ideas of the Copernicus Architecture. By using the operator concept to fight the force as a whole, the decision-maker has decentralized his forces, and maintained the survivability and flexibility of the multi-national force.

3. Issues for Discussion

The items for discussion include the functional requirements, the physical hardware, and the organizational structure of the system.

a. Functional

The functions are what a user does. To perform these functions, a user generates commands, which are normally requests for system services which go to the next lower layer, provided the architecture used promotes a layered approach. For both Copernicus and Cooperative Engagement, the layered approach is used. Within those systems, force level management, detection, command and control, and engagements are all requests that are formulated up or down the layered hierarchial approach. The big difference between the two systems actually appears to be on the focus. Copernicus focuses on the individual operator and the communication links that support the operator, while Cooperative Engagement widens the view somewhat to include battle force structure.

b. Physical

The configurations and components of Copernicus and Cooperative Engagement, have been listed earlier. The architectural characteristics of each can be compared and contrasted in order to develop the ground work for the multi-national architecture to be laid out in the following chapters.

Each design implemented a layered approach that gave a high degree of modularity. As seen from the principles of an architecture, this capability, coupled with the idea that an individual layer can develop at different rates, allows for the flexibility needed in a combined theater.

To continue on with flexibility, both allow for interchangeable parts such as displays, workstations, processors, and memory modules. The Copernicus concept of identical workstations for the operator only being changed by the software generation/re-generation concept is exceptionally appealing to this author, an experienced console operator. This is appealing because of the learning curve that is required for each console now in operation in the fleet. If there was a base console that operated different warfare areas with only an exchange of software, the job would be different, but the physical operation of the console would be the same, allowing for a concentration on warfare tactics. Such a concentration on tactics would be possible, because the operation of the console would soon become stored habitual behavior, not unlike driving a manual transmission car. Similarly, standard formats, protocols, interfaces and links allow for both internal (what Copernicus has started working on), and external (joint/allied) compatibility.

c. *Organizational*

After reviewing the components of both architectures, the organizational hierarchy was evident in the principles that both systems used. For a further discussion on the organizational structure of either architecture, see Copernicus Architecture Phase I: Requirements Definition, August 1991, or the Navy Cooperative Engagement Architecture Working Group Final Report, June 1991.

IV. STRUCTURAL ANALYSIS

"Authority without wisdom is like a heavy ax without an edge, fitter to bruise than polish"

- Anne Bradstreet

A. PROBLEM ANALYSIS

The key element in discussing the paradigm used for problem analysis is the inherent fact that it does not really matter who's system you use, or for that matter, who uses the system. When this author viewed the internal structure of Command and Control used by the United States Navy, analyzing the information and data flows, the Stimulus-Hypothesis-Option-Response (SHOR) model was the base for problem solving. This model was chosen because of the author's concept of the problem.

Cooperative Engagement is a structure that allows the individual operator in the Copernicus Architecture to approach problems utilizing the SHOR paradigm. The SHOR paradigm was chosen for the operators decision making model, because of its ability to deal explicitly with both information input uncertainty, and consequence-of-action uncertainty in military problem solving. (Waltz and Buede, 1986, pp. 396-410) To illustrate, using the three major concepts listed above, a discussion on objects and their relationships to other objects will be presented, after an overview of the SHOR paradigm.

Both will be essential, as the entity relationships and the SHOR paradigm then lead to a discussion on how the decision-maker solves resource allocation problems in the Cooperative Engagement structure.

1. SHOR Paradigm

Wohl introduced the SHOR paradigm as a model to illustrate the perceptible features of the military decision-making process (Wohl, 1984, pp. 261-307). As stated earlier, the model was devised explicitly to deal with the information input uncertainty and consequence-of-action uncertainty in military problem solving. It revolves around the data driven reactive approach to problem solving. This then leads to the concept that the model is tactical in nature, dealing with the unpredictable elements and urgency of combat. But the SHOR paradigm itself does not fully allow the flexibilities that a commander might need in the realm of battle. To accomplish this, the idea of a mental framework was added to the picture. Besides providing the decision maker with an internal representation of the problem, the ability to compare to past experiences, a mental model functions as a theory or framework from which to generate hypotheses. This, concludes Wohl, affirms that the hypothesis is directly contrived from the interaction of input information with a commander's mental model. This process is illustrated in figure 4.1.

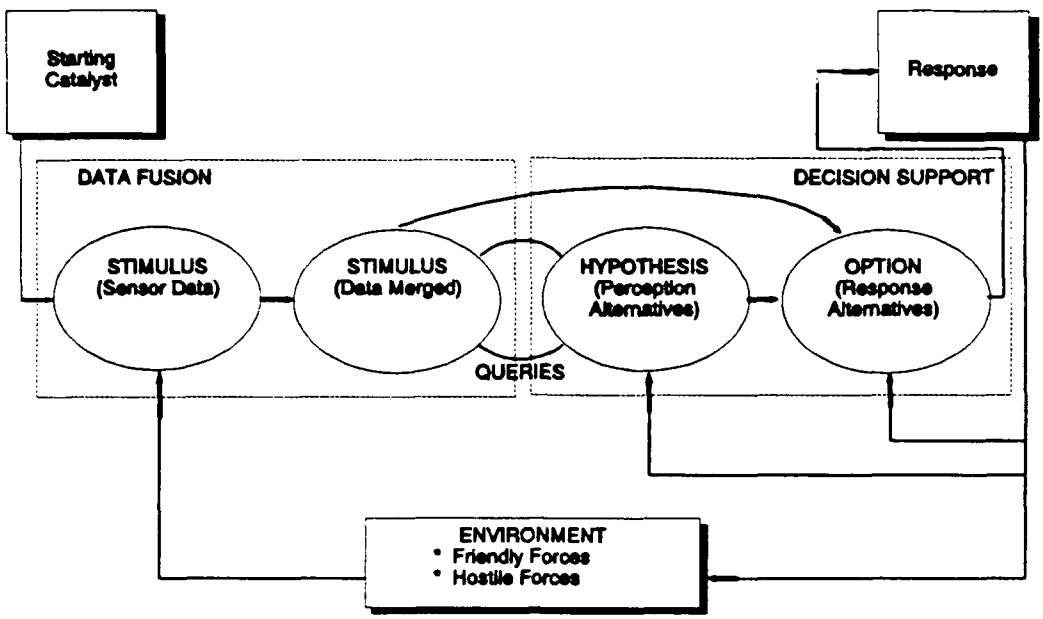

FIGURE 4.1: SHOR MODEL OF DECISION MAKING

SOURCE: DATA FUSION AND DECISION SUPPORT FOR COMMAND AND CONTROL

In addition to the loops presented in the discussion on the model, Figure 4.1 also adds an additional feedback loop to the model. This then gives the model the ability of the hypothesis process to query the data fusion process to search for data that may support hypotheses under consideration.

Another key aspect to the SHOR paradigm is the ability to incorporate the psychological concepts of cognitive bias and attitude of the decision maker. This can and will come into play quite often, when discussing the interaction of the impromptu coalition, that may or may not be given the time to train on a coordinated doctrine. Attitudes have a direct impact on the desired outcome, as well as an indirect impact

on the course-of-action options availability and selection. Cognitive bias also affect the decision, assigning weights to both the hypothesis and the options available.

2. Object Orientation

The SHOR paradigm gave a model for baseline decision making. When deciding the elements used in the model it is best to determine the actual structure in a object-oriented systems analysis. From here, it can be shown that the information and data flows required from a certain system can be broken down into certain specific objects, thus allowing a detailed analysis of the structure, without getting in the nuts and bolts of the individual components. Yet, to do this, it is imperative that object-oriented analysis is understood to a certain level. This can be tedious at times, so bear with me.

The world is full of things; different types of animals, cars, sports, planes, and ships might come to mind. For object-orientation, lump these like objects of each category together and call the resulting abstraction an object. This is done so that all of the real-world objects in the set have the same characteristics and are subject to and conform to the same set of rules. Of course, depending on the decision makers criteria and rules, likeness depends entirely on the purposes the decision-maker has in mind. For our purposes, we will identify Command and Control nodes, ship

bridges (the Officer of the Deck for navigational reasons), and communication paths as our objects.

To further the objects orientation, the empty objects can be represented together in a table, and the table can be filled in to represent the real-world things from which the abstracted object originated. To identify a single characteristic possessed by all the entities that were, themselves, abstracted as an object, in itself defines an attribute. To better understand this concept is to view a ship as an entity. On each ship there is the ability to communicate on communication lines illustrated earlier. These communication lines would be an attribute of each entity ship. The place that objects, tables, and attributes is leading us to is one of relationships. This is critical to understanding the structure of a command and control system.

The concept of a relationship is easy to grasp, and is used in determining how entities fit together by way of an entity-relationship diagram. Simply put, a relationship is the abstraction that holds together certain objects. For our use, each type of relationship will not be explored, but rather defined simply as a ship contains command and control nodes, a ship contains communication nets, and a command and control node works on communication nets. Further illustrations of the higher order entity-relationships are included in Shlaer and Mellor. (Shlaer and Mellor, 1988)

B. INFORMATION AND DATA FLOWS

Now that the analyst has a paradigm to understand the authors decision-maker at any level of the architecture, as well as a object based system to work in, where does the information come from?

A major concern in any information system is with information flow. Individuals and organizations, through roles in the command structure, generate and receive system information. Paths taken by this information flow are related to command structure but usually include additional connections. The information-flow structure per se represents the where and what aspects of system information flow. To establish, then, the information flows that are necessary in a Command and Control architecture, the following data must be established for each information path:

- Nature of required communications - voice or data(data flows will be discussed shortly)
- Frequency - average, minimum, maximum, if not continuous - and duration of communications
- Fraction of calls initiated by each node
- Acceptable delay statistics due to busy nodes or unavailable paths, not applicable to a node-switching network
- Priority of information transfer

Data flows are described by the following characteristics:

- Synchronous or asynchronous

- Bit-rate
- One-way or two-way
- With or without error detection, with correction or retransmission

The completeness of the characterization of information and data flows are related to the individual Command and Control Architecture by the following three requirements:

(1) how specific the requirements are, or how well the existing system is understood

(2) how critical the system is for meeting the special and urgent needs of its users,and

(3) how much money and time are available
(Beam, 1989, pp. 152-157)

C. TIME CONSTRAINED FUNCTIONS

In developing the need for time constrained functions, the author initially looked at the concept of petri nets. By design of the thesis, the actual description of the command process using petri nets was not conducted. In its place, the command functions that are required for a Command and Control Architecture are listed and discussed in the object-orientation view, and within the SHOR paradigm presented earlier. It should be noted that these functions are being discussed under the time constrained heading, because of the inherent need for multi-national forces to have the capability

to organize quickly and efficiently in order to complete a mission.

1. Observe

Within the broad term of "Observe", a wide variety of functions preside. It is an all-encompassing data fusion function. It involves not only storing data together, but also association, correlation, and tracking functions. Quite often, this aggregate of information is referred to as the tactical picture at the combat level. Within the SHOR paradigm, the observe function falls under the Hypothesis or Monitor domain. This allows a combination of the sensory inputs to build a perception of the location and activity of any and all objects in the environment. This perception may be colored by expectations arising from current knowledge, or of past behavior of the entities involved. It may even be biased by the current tactical environment.

a. Generate the tactical picture

The current tactical situation is determined by integrating the position and movement of own force and enemy units from all-source sensor information. It is this function that takes all the observed contacts, associated relationships, and attributes, finally generating the best level of knowledge concerning all contacts of interest. The goal is to provide an estimate with a corresponding confidence level, for the entire force to comprehend. Because of the

probability of a less than 100 percent coverage, it is not uncommon to carry more than one hypothesis of the situation, pending new information. Additionally, the current and projected environmental picture is developed.

b. Maintain data

Maintaining a data base is perhaps the easiest of the command functions to understand, but still one of the hardest to consistently work on. This function is the product of the incoming sensor and message data, and historical records. It is required to maintain the historical and real-time/near real-time tactical picture data base. This data base should be tested on a regular basis to ensure that the data base consistency is maintained. A real world example of this function is the Force Over the Horizon Coordinator (FOTC). To ensure that a viable target data base on contacts of interest is kept up to date, the battlegroup commander designates a resource to keep track of data entries. The concept is simple, but due to lack of sensor coverage, non-autonomous position reports, and variability in navigational systems, the task becomes monumental, and requires constant attention.

c. Characterize data

After generating the tactical picture with the sensor information available and updating the data base, the data must be characterized. The decision-maker must be able

to sort the individual events taking place, and in as many cases as possible associate the events with known actions and responses stored in a historical schema. Again, this process is described with a confidence level. Following sorting and association, the events must be identified and mapped onto a resource. Before the event can be partitioned to a resource, however, the resources must be compiled and their readiness condition known by the decision-maker. The reason is by monitoring the configuration and readiness of available resources, required actions can be directed and performed within the limitations, allowing corrective actions to take place to overcome force degradations, or to reconfigure/reallocate resources.

2. Assess

The assess function takes the combined data gathered in the Observe function and gives meaning to the tactical situation, including enemy intent, and potential outcomes of unfolding events. Within the SHOR paradigm, the Assess function also is located in the hypothesis stage, and infers meaning from the observation. This is a situation assessment and hypotheses involve both current situations and anticipated future outcomes.

a. Conduct mission assessment

When the mission or an intermediate objective has been accomplished, suspended, or aborted, mission assessment

is performed. This involves an assessment of goals and objectives that were met, reconstruction of events and lessons learned that may be of value in future missions or engagements. During the physical operation, this constitutes a progress report to a higher authority.

b. Assess plan effectiveness

The effectiveness assessment is used to assess bounds, develop options, and provide conflict resolution and identify risks in the current plan. The assessment may result in the realization that the current plan, including its contingencies, is not adequate to accomplish the mission and that a new plan or strategy is required. If a new update is required, then the execution process may be inhibited and a replan in necessary. It is here the anticipation is developed to avoid blindly following a plan that is no longer likely to succeed. Assess, as a function, operates with the Observe function in the evolution of prediction. When the Assess function needs to conjecture future situations, it will advise the Observe function what assumptions to make in order to predict the future tactical picture. From this relationship, the decision-maker will develop alternative courses-of-action. The decision-maker will also identify uncertainties in the incoming data (hence the SHOR paradigm), determine adequacy of resources and data, and finally predict the outcome with a

confidence level, comparing this product with the desired result.

c. Assess plan progress

By using this command function, a decision-maker has the ability to evaluate progress along the plan in order to support the decision to execute a desired act in accordance with the mission priorities. This is done by comparing the known tactical situation with a set of conditions used to determine if the plan is being executed toward the expected sequence of events and therefore the expected outcome. As long as the plan is on target, this function just assures that the progress and resulting small branching decisions made are in conjunction with the overall goal. If the plan is not on target, the decision-maker must then determine if the contingency criteria has been met, and if it has, execute a contingency plan.

d. Characterize the current situation

Based on the raw data received by the entity in the observe function, the idea here is to extract the meaningful data in terms of capabilities, advantages, and intentions of all contacts of interest within the tactical picture. From this compilation of data, several hypotheses can then be generated. Evidence to support or reject each hypothesis is then sought from further data collected through sensors in the observe function. If the decision-maker has

received good data and made sound decisions, even without 100 percent coverage each hypothesis may exist with varying degrees of confidence, risk, and payoff. Most important in the international arena, is the characterization of own-force and enemy posture. Each posture involves an evaluation of tactics and operational effectiveness, the state of operational capability and readiness, intentions, and the vulnerabilities of each force.

3. Plan

Within this function the commander generates the optional courses-of-action intended to achieve the goal or mission. It evaluates and selects primary and contingency courses-of-action, including organizational responsibility, procedures and allocation of resources to general task areas. The criteria for assessing situations and changing procedures are defined in this function, and they are actually implemented in the assess function. The procedures, including the rules for allocating resources, are used in the execute function, solely to implement the plan of action and control its progress. Within the SHOR paradigm, the decision-maker is now in the Option phase. The plan function contains the option generation and evaluation processes. The selection of options is a decision that can possibly result in contingency plans that become deferred decisions or preplanned courses-of-action. Also, the plan function has a subfunction that allows

the generation of plans and directives that are products of the process. This is part of the Response function in the SHOR paradigm.

Planning is the establishment of control procedures for the accomplishment of a purpose. To be able to accomondate the variety of multi-national coalitions that could spring up at any given time, this entire thesis is one such planning document. To operate in a "come-as-you-are" environment and yet still be extremely flexible, without a giant loss of efficiency, requires such an effective control procedure. Thus, planning generates the pattern for desired behavior of the forces or elements to be controlled in response to future events caused by one's own or others' actions. Several alternatives may actually be developed, but only one chosen as the plan of action, even though it too may have several contingency branches which anticipate uncertainty in multiple future events.

a. Define and Bound the mission

As the first step in the planning function/process, this function bounds the problem to be solved by putting limits on the problem and the options for consideration in solving the problem. It is in this function that higher order directives are received and interpreted, within the framework of the operation, the higher authority's mission and the capabilities and limitations of assigned

resources. This function becomes easier when tackled in the object-oriented framework discussed, but even with this black box method, the attitude and cognitive bias of the decision-maker is extremely important. By starting in this area, one can easily define specific goals and objectives, and this also characterizes the generally expected unfolding of the tactical situation. It is only constrained by established procedures and rules of engagement set by higher authority. This was not often a problem working in a single component or even joint arena, but when working with other nationalities, it is imperative that a common ground be reached in rules of engagement. This will be amplified in chapter five. In summary, when defining mission bound, the decision-maker must receive all incoming data objectively, develop a mission statement, describe the geographical area of operations, describe own and enemy forces, and postulate enemy strengths and possible courses-of-action.

b. Development of alternative courses-of-action

By combining the characterization of the current situation with the mission definition described in the plan bounds, proposed course-of-action and alternatives are developed. In this process, additional information or guidance may be requested from the higher command authority, when proposed options appear to go beyond the bounds developed. This process involves the delineation of

procedures and nominal identification of organic and non-organic resource requirements for each proposed option. Within each option, a more specific characterization of the expected situation is derived in terms of the proposed activity, operating procedures, and enemy responses anticipated for that approach. For each option, an evaluation of the potential outcome, based upon an identified effectiveness criteria, risks, and benefits will be required.

Even with the list of basic functions that must be done to efficiently handle a warfare area in a battle force listed later in Chapter five, contingency planning will be crucial. In an ideal world, the commander could request what kind of platforms he/she needed to accomplish mission goals. Reality dictates otherwise. Instead of asking for certain platforms from allied nations to "round out" the battle force, it will be necessary to accomondate forces available. With these available resources, the commander must then complete the assigned mission from higher authority. This then necessitates the need for contingency plans to best mold the resources available. In the event of the necessity to perform a replanning process, new alternatives may need to be generated, or earlier options updated with more recent information or direction. For each course-of-action it is necessary to ensure that an organizational as well as command structure is established. From these structures missions and task objectives are then delegated to subordinates. Resource

activities, to include time, place, and tactics involved, operating procedures must both also be proposed and solidified, if for no other reason than conservation of resources. Operating in a coordinated plane is difficult without standard operating procedures, tactics and rules of engagement.

c. Select plan of action

The overall goal of this command function is to identify risks and shortfalls of each course-of-action, and then select the primary and contingency courses-of-action. It is a classical decision. The process involves a review of the potential outcomes of each alternative with advantages/disadvantages, suitability, feasibility, and acceptability. With each is also an estimation of the probability of success and the risks associated with each alternative, as stated above. Within this function is also the replanning and update process, when in the assessment function it is determined that the latest plan can not be met. A contingency plan may go into effect at this point, requiring a cessation of some tasks being executed. Almost in afterthought, the results of replanning then becomes the standard to gauge the plans success against.

d. Plan generation with required updates

Given time and sufficient manpower, this function ensures, to the best of our ability, that a plan goes

according to schedule; thus, laying the framework for mission accomplishment. In a multi-national coalition hastily formed in a crisis prevention mode, this may not get the attention it deserves. Specifically, the generation of the original plan and associated updates involves the elaboration of the detail required to clearly and concisely communicate the expected objectives, schedule of events and methods of achieving them, to other elements of the organization including subordinates, support elements and superiors. Elements of the plan would definitely include intended movement, support, protection, coordination, and other methods of control of the assigned resources.

The plan also identifies a set of conditions that describe the expected situation and the criteria for identifying situations. These criteria are used in the assessment function to determine plan progress, and for the interpretation of the meaning and intent of the future situation. These criteria must be in the mutually exclusive category, otherwise replanning is inevitable. The formulation of the plan may involve the dissemination of a preliminary operational plan/directive to subordinates. Then, after coordinating with these subordinates, force posture is evaluated, and the final plan is generated. Some critical elements of a finalized plan will include the following; a developed concept of operations, specific contingency situations and responses, and delegated authority.

4. Execute

The climax of an operation, the execute function selects a specific course-of-action, based on the current assessment of the situation. Using procedures established in the plan and data gathered in the observe function, specific allocation of resources and tasks or even specific guidance variables are generated as directives and issued as orders or implemented as actions. It is the resource allocation directive that represents the outcome of the decision making process, and essentially what the author is doing in chapter five. The SHOR paradigm involves the execute function primarily in the Option phase, but like the plan function, also has a subfunction that is driven by the Response phase of SHOR.

a. Identify current courses-of-action

The execute function provides the processes that define and describe the specific actions to be effected in order to carry out the prescribed plan of action. The first sub-function in execute, identifying current courses-of-action is based on the assessment of the current situation, selecting from a predefined set of contingencies. If a condition arises where a contingency has not been formulated for, the decision-maker must fall back to the planning function and replan the situation. This process involves the determination of the specific tactical and support requirements based on the action

requirement of this contingency or branch. It also establishes rules for scheduling resources, identifies data requirements for control generation, and provides criteria for threshold settings.

b. Schedule resources

A major task when operating in the combined arena, the author has decided to use the mapper algorithm developed by Alphatech, Inc. to map functions to available resources. The functions to be mapped are related to the specific branch of the latest plan. The mapping process involves matching the task requirements to the capabilities of the available resources. Only after this is accomplished are specific commands generated for the implementation of the tasks at hand.

c. Generate commands

The tangible function that most people can relate to, this function encompasses such things as a direct change in status or posture, a transformation of data for control purposes, and the physical documentation of command directives. Another way of viewing this function would be as the real time equivalent of plan generation. Here is where such things as equipment settings, sensor operation and platform positioning are specified to optimize performance under the existing environmental conditions and tactical situation.

V. GENERIC MULTI-NATIONAL FORCE ARCHITECTURE

> Doctrine unites action. It influences and is influenced by training, technology, tactics, and objectives. Doctrine, the instituted set of procedures for combat, should be compiled for the people controlling the weapons systems, ships and aircraft, elements of the fleet, and the fleet as a whole. These procedures must be compatible. Doctrine at all levels should be specific, designed to achieve the best results from a united team, but should also allow room for inspired tactics and initiative.
>
> - Wayne P. Hughes, Jr., Capt. USN (Ret.)

A. SUMMARY OF INFORMATION AND DATA FLOWS

Utilizing the SHOR paradigm as a tool for the decision-maker allowed the Copernicus architecture, with its emphasis on the operator and the communication nodes that input to the operator, to fuse with the Cooperative Engagement structure of resources. Operating with these tools, the author developed a generic tactical picture, complete with characterized, maintained data on resource status and condition. In the observation phase, the tactical picture presented to the decision-maker went through an assessment function. This allowed the decision-maker to conduct mission assessment by evaluating plan effectiveness and plan progress. Plan assessment required that an output of the planning function become an input to the assessment function, thus allowing for a continual feedback and learning loop. It is during the planning function, however, that the decision-maker defines

and bounds the mission, develops various courses of action, and finally picks a primary and alternate course of action for implementation. From this selected course of action, the decision-maker then executes a function which identifies the course of action that is being taken, schedules resources to the functions, and generates commands to those resources necessary for mission accomplishment.

Alliance navies have a considerable tradition of operating in a multi-national environment. Currently, two Standing Naval Forces (SNFs) and one On-Call Naval Force (OCNF) are in existence. They are the Standing Naval Force Atlantic, the Standing Naval Force Channel, and the Naval On-Call Force in the Mediterranean. Each group trains as a multi-national, operational unit under NATO command. The groups exercise current NATO maritime strategy using standard operating procedures and tactics,and participating regularly in the major NATO maritime exercise program. These forces have proved themselves ideal vehicles with which to display NATO commitment, unity and capability for combined operations at sea. (CNW Report 5-91, 1991, pp. 2-4) Although operations with NATO countries is not the focus for this thesis, several key ideas can be drawn from the successful deployment of NATO forces. At an operational level, multi-national forces often provide specific additional capabilities over and above those provided from a single nation. In addition, depending on the geographic setting and the national forces involved, being

available for immediate deployment in a correctly configured multi-national coalition provides a potent capability for preventing or defusing a crisis, or even terminating a conflict. Similarly, multi-national operations, in the view of this author, may also be viewed as less provocative and, therefore, less escalatory than those of a single nation. As stated earlier this thesis does not focus on what currently exists, that of the ability to work with NATO countries; instead, it deals with those countries that are not operated with on a continual basis, but whose service the United States might well be working with. In recent memory, this came to the forefront in the Desert Shield / Desert Storm campaign.

B. DATA/INFORMATION FUSION ARCHITECTURE DESIGN

In Chapter IV, the author discussed the structural analysis which is the basis for the multi-national generic force architecture presented later in this chapter; and, displayed in Appendix B. The translation of this functional model to a physical architecture requires a hierarchial breakdown of the functions into subfunctions, and then assigning these functions and subfunctions to resources. Before actually discussing the physical architecture, there are a number of implementation characteristics, of the architecture, that must first be considered:

- Definition of mission or operational specifications
- Definition of system functions
- Allocation of system functions
- Development of courses of action
- Analysis and choice of a course of action (Waltz and Llinas, 1990, p. 349)

1. Define System Level Requirements

Mission or operational requirements, referred to as system level requirements, are defined by the operator based on a formal statement of operational need (SON). This is done in order to describe effectiveness in the broadest terms. The statement of need for the development of this thesis is two fold; from experience in the fleet as a Combat Information Center Officer on board USS Mississippi (CGN 40), and as one of ADM Macke's goals as J-6. Specifically, his goal is to provide a guideline for the United States Navy to operate efficiently with any given ally on a 'come as you are basis'. This will best apply in Contingency and Limited Objective Warfare (CALOW) operations as well as Low Intensity Conflict (LIC).

The definition of mission requirements is given by the highest level of system specification, and these system specifications are usually referred to as A-Level specifications. Such A-Level specifications could include surveillance, target identification accuracy, and so on. For

the purposes of the generic multi-national architecture, the author has defined the following A-Level specifications:

- National Doctrine, for all nationalities committed to the force.
- Mission Directives, determines what warfare area the force will conduct.
- Rules of Engagement, determines what is hostile act, intent, and force.
- Unit Capabilities, a physical description of not only the existing capabilities, but the status of the equipment and reliability.
- Environmental Constraints, includes both terrain and weather conditions.
- Physical Targets, for such things like target nomination rate and information load capabilities.
- Target Data, a quantity that takes into account accuracy of incoming data and timeliness of data.
- Coordination Information, which includes the typical portions of an Annex K (Communications plan, cryptology keys available for share and use, etc.).
- Assets Available, which U. S. forces are going to be committed to the coalition.
- Supporting Resources, to include not only foreign combat forces, but logistics as well.
- Undamaged Neutrals, to insure that safety for those operating near a combat zone, and are not involved.
- Unmolested Friendlies, to ensure that no blue on blue engagements take place.
- Destroyed Enemy, the ultimate goal in a hot war in order to achieve superiority in the opponents mind, therefore realizing victory.

2. System Functions

The mission requirements are converted to functional performance requirements at the system level, requiring decomposition of the system into functional subsystems. This process of decomposing the higher-level requirements to lower-level requirements is the essence of the hierarchial, layered architecture that the author proposes, and must include such items as capacity of the resources to handle a number of targets, target update rate, sensor requirements, communication requirements, processing requirements, display requirements, and test and evaluation requirements. The set of required operational functions that the author used is presented in Appendix A. Those functions, along with the system level requirements listed above, are summarized by Figure 5.1. Mapping of these functions onto physical elements must occur at each of the following levels of force posture:

- Association and Attribute Refinement
- Situation Assessment
- Threat Assessment (Waltz, 1990, pp. 358-360)

a. Force Posture

With the introduction of multiple sensors, associated data is generally appended to the target records to expand the role of the track file to that of a target data base containing a fused amount of information. This

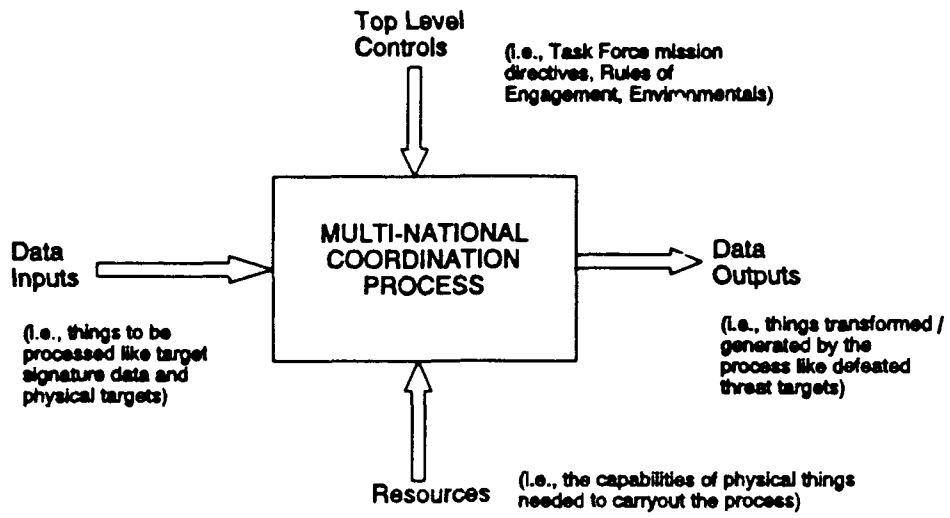

FIGURE 5.1: TOP LEVEL PROCESSES

information contains target attributes, as well as sensor attributes. This information is stored in a data base that contains data alignment, correlation, tracking and identification, and, situation and threat assessments.

b. Data Base

For the most efficient architecture, it is necessary for threat levels incorporating the hostile or friendly military situation and the hostile force threat assessments to be knowledge based data subsystems. This would allow the data base to include the following:

- Rules, networks, or other hierarchical methods used to describe entities or events to be identified on the basis of attributes.

- Rules for making hard-decisions for presentation of situation or threat data to the decision-maker.
- Time sequence patterns of events and activities that uniquely identify behavior.
- Spatial patterns of entities and events that identify behavior.
- Storage of intermediate scene level hypotheses that describe the situation or threat. (Waltz, 1990, p. 359)

Of course, if the knowledge data base is used, it must divide the incoming information into three distinct classes of information; short-term knowledge, mid-term knowledge, and long-term knowledge. Short-term knowledge is that information that is re-processed and buffered for target state and target attribution data. Mid-term knowledge is the organization of short-term knowledge into a perception of the current situation. This knowledge is maintained in a dynamic environment, constantly updated as the situation assessment process estimates the state of the targets, events, and activities. This also is a shared data base with which multiple assessment processes may interact, and then mutually evaluate the data. Long-term knowledge is the static factual and procedural knowledge that supports control and reasoning. This would be highly important in a multi-national force, as it is the basis for formulation of decision rules. (Antony, 1987, pp. 380-396)

c. *Multi-National Architecture*

The idea here is to assign functions to physical system components such as sensors, processors, software, and communication links. Analysis and modeling of command and control systems require four separate but related dimensions of description. They are as follows:

- Process: an automated function, a human task, a procedure, or an algorithm.
- Resource: a physical mechanism, a human, a geographic location, or a node.
- Organizational Element: a subdivision,a unit, or an individual.
- Goal: a performance objective, or an intended result. (Kapasouris et al., 1989, pp. 1-2)

The dimensions of description are important for functional allocation, because of the problem of mapping functions to resources. Mapping any function to a any resource could be done very quickly, but very probably would be inefficient. Optimal mapping of functions to resources, some of which may be organizational elements, in order to meet specified performance objectives or goals while taking into account various types of constraints, is the goal of the four dimensions listed above.

The goal of the multi-national architecture is to accomplish assigned coalition missions successfully and efficiently. Each individual mission contains functions, constrained with the idea that the functions must be completed

in a certain order (according to plan). For the template presented by the author, the top level functions are broken down in Figure 5.2.

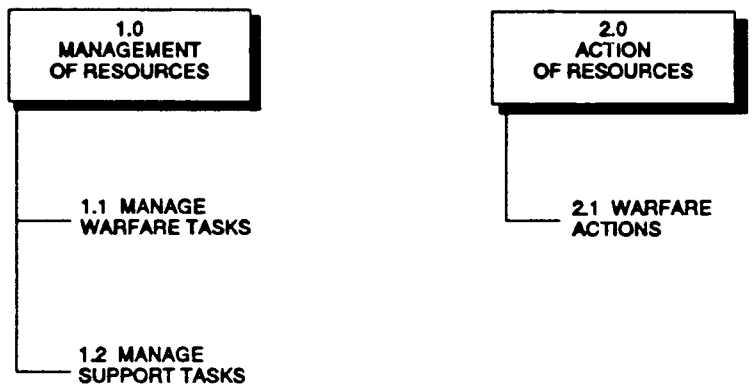

FIGURE 5.2: DECOMPOSITION OF TOP LEVEL FUNCTIONS

Taking this with the notion that the organization is also decomposed into individual operating elements or units, and that the communication links and nodes define the hierarchy in the organization, points to the fact that each resource has different capabilities. This further functional decomposition is illustrated in Figure 5.3.

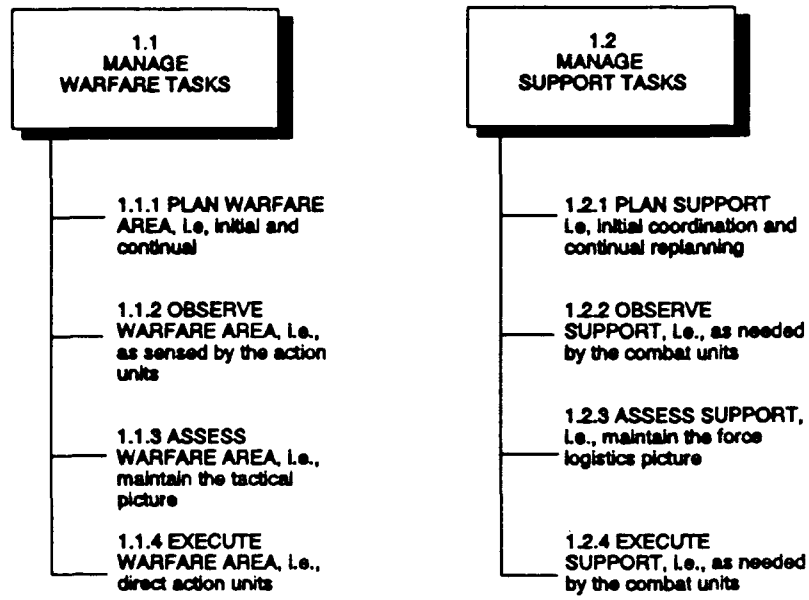

FIGURE 5.3: DECOMPOSITION OF TOP LEVEL FUNCTIONS TO THE THIRD LEVEL

Work has been done by ALPHATECH, Inc., and already they have produced an optimal function mapping algorithm called Mapper. Specifically, Mapper is a microcomputer based tool that uses a novel optimization algorithm to map missions and goals onto organizations. (Kapasouris et al., 1989, pp. 2-3)

Due to time constraints, this author was not able to map out all of the functions to their physical counterparts, but in determining the actual functions that needed to be performed, the use of the four pillars of Copernicus, as well as the structure of Cooperative Engagement, was beneficial. Just as the author felt time constraints, so can multi-national coalitions. Preparation lead time for Desert Shield / Desert Storm was very valuable,

but it was an apparent exception to the crisis rule. Not only did the opponent to the coalition give the multi-national force time to organize their forces through liaison meetings, but a host country actually provided the military infrastructure. In the future, liaison meetings and military infrastructure may both be missing, causing the on-scene commander to make decisions about the effective employment of multi-national forces at the commanders disposal. Organization of operational plans, as well as individual warfare areas, will both benefit by viewing the problem through the structure presented here, and in Appendix B.

3. Implementation of the Architecture

The primary idea presented in this thesis is the answer to the question "What do we have to do different when linking up with a foreign ship, in order to operate across structural, functional, and behavioral forms?." The answer goes well beyond language communication differences, and includes physical hardware limitations, doctrinal differences, and weapon system capabilities. The background to answer this question, as well as the material for content, are both listed within this thesis. The generic command and control architectures required operational functions are listed in Appendix A and the functional flow lines are given in Appendix B. The architecture begins with Multi-National Coordination Process, and proceeds through a combination of management and

action tasks as shown by figures 5.1, 5.2, and 5.3, finally stopping at the individual entity level.

In order to correctly implement the multi-national architecture, without liaison meetings between countries involved in the coalition, requires a quick review of cognitive biases. This is done in order to form a heuristic that deals with the function assignment process. Representativeness, Availability, and Adjustment and Anchoring are three efforts to combat cognitive biases that stem from judgmental heuristics. Representativeness includes:

- Insensitivity to prior probability of outcomes
- Insensitivity to sample size
- Misconceptions of chance
- Insensitivity to predictability
- The illusion of validity
- Misconceptions of regression
  (Tversky and Kahneman, 1973, pp. 258-264)

Availability, as a cognitive bias, includes:

- Biases due to the retrievability of instances
- Biases due to the effectiveness of a search set
- Biases of imaginability
- Illusory correlation
  (Tversky and Kahneman, 1973, pp. 265-268)

Adjustment and Anchoring include:

- Insufficient adjustment
- Evaluation of conjunctive and disjunctive events
- Anchoring in the assessment of subjective probability distributions
  (Tversky and Kahneman, 1973, pp. 268-272)

After reviewing the biases that can occur in cognition, the three heuristics presented above can help in making judgements under uncertainty. Representativeness is employed when the decision-maker is asked to judge the probability that a function belongs to a certain resource. Availability is often employed when the decision-maker is asked to assess the reliability of a resource. Adjustment from an anchor is employed in prediction when a relevant value is available. Each of the three heuristics are highly economical and effective in determining the ability to operate with given forces in pursuit of mission accomplishment; however, they can lead to systematic and even predictable errors.

4. Architecture Evaluation

The ideal case of multi-national tasking would be for a commander to analyze the forces for disposal, review mission goals, and then request the perfect match from participating countries in the coalition. Unfortunately, this is only an ideal case; yet, it is the imperfect cases that require evaluation of the ability of the architecture to accomplish baseline functions. This process of quantitative assessment is applied in order to the military effectiveness of those

systems. Specifically, the assessment of the architecture must include the following questions:

- What is the best combination of sensors and sources to meet a given set of detection probability, target discrimination, and target location requirements?
- What level of detection, discrimination, and location performance can be achieved through coordination of separate platforms?
- What trade-off must be made between improvements in information transfer and weapon system performance? (Waltz, 1990, p. 389)

Effectiveness must be quantified, and numerous quantifiable measures of merit can be envisioned: engagement outcomes, exchange ratio, total targets destroyed, and so on. The ability to relate architecture performance to military effectiveness is difficult because of the many factors that relate improved information to improved combat effectiveness and the uncertainty in modeling them. Modeling and simulation are important in determining the ability to evaluate the architecture due to the lack of organized operational exercises. Relating performance characteristics of the architecture to military effectiveness in this method is accomplished by the Military Operations Research Society's Standards. These measures of effectiveness are summed up in Table 5.1 (Johnson and Bhattacharyya, 1985, pp. 465-488).

Table 5.1
MEASURES OF MERIT

Measure	*Definition*	*Example*
Measure of Force Effectiveness (MOFE)	Measure of how a C^3 system and the force of which it is a part perform military missions	Outcome of a battle Survivability Attrition rates Exchange Ratio Weapon Accuracy
Measures of Effectiveness (MOE)	Measure of how a C^3 system performs its functions within an operational environment	Tgt Nomination rate Timeliness of information Accuracy of information Communications survivability
Measures of Performance (MOP)	Measures closely related to dimensional parameters but instead measure the attributes of system behavior	Detection probability False alarm rate ID probability and range Communications time delay Tgt classification accuracy
Dimensional Parameters	The properties inherent in the physical entities whose values determine system behavior and the structure under question, even when not operating	Signal-to-noise ratio Bandwidth Frequency Bit error rates Resolution Sample rates

Because of the lack of data available to measure the performance and effectiveness of the architecture, a viable option would be combat modeling. With human interaction in

the architecture, algorithms modeling human behavior should be added, or real-time man in the loop simulations employed. The model, and more importantly the results of the model, are very similar to the heuristics employed prior to implementation. Therefore, it is important to remember that the models are only simulations, with predictable errors.

The essence of this thesis is illustrated by a roadmap of decomposition presented in this chapter; and, given in detail in Appendix B. It is a physical checklist (template) that could be used by an on-scene decision-maker. The template was constructed at a level just above the physical hardware and is aimed towards effective coordination of the multi-national forces, by ensuring that all aspects of coordination are covered. This template is a physical reality, and was not just a part of a theoretical discussion. It would and can be helpful in coordination issues, in this author's opinion, but to do so it must be physically implemented by the decision-maker.

VI. CONCLUSION

"Men mean more than guns in the rating of a ship."
-John Paul Jones

A. GENERAL

The proposal of the thesis was that the Copernicus Architecture and the structure of the Cooperative Engagement could be interwoven into a base template, in order to be used in a crisis situation for multi-national operations. The premise did not include NATO forces, as there are currently standard operating procedures when working with these countries. Instead, the focus of the thesis dealt with those countries that the United States might have to work with on an ad hoc basis, not unlike the situation that just recently occurred in the Persian Gulf.

The basics required for combined operations included functions required for mission areas, resources needed for these functions to be completed, data and information flows for the flow of information, and time constrained functions. After reviewing the command and control diagrams of past ad hoc multi-national campaigns, the author concluded that the coordination of these combined forces was conducted at much too high of a level. Given the long lead time that has occurred in the past prior to hostilities, the high level coordination has worked up till now. However, due to the

downsizing of the military, in conjunction with regional conflicts, the United States role of world "policeman" will not be able to continue without quickly formed alliances. The dilemma exists in the fact that someone who is our ally today, may be on the opposite end of the argument tomorrow; therefore, necessitating the need to control the information and intelligence flow given out to these quickly formed alliances. The template works with these delicate issues, allowing the decision-maker at the tactical level the flexibility to coordinate with regional forces in order to accomplish the mission.

B. TEMPLATE GENERATION

The generation of the template was conducted on IDEF0 software provided by SPAWARS. The idealology came from the existing shortfalls in our current architecture, namely the inability to mold the available warfighting doctrine to the problem. Flexible doctrine allows for incremental changes in the architecture, thus allowing tactics to keep pace with technology. The whole idea behind the template was to allow the commander to perform a variety of baseline tasks, therefore fighting the force as a whole and hopefully achieving an optimal pairing of platforms per individual engagement.

C. AREAS FOR FURTHER RESEARCH

Template validation is an overwhelming choice for further research. The ideas in the thesis are structurally sound in a conceptual environment; yet, until they are tested in an operational environment, the actual ability of the template to achieve multi-dimension coordination is not proven.

D. COMBINED FORCES COORDINATION

The key reason for developing the combined forces architectural template was to give the on-scene commander an efficient and effective tool for use in coordinating the assets available. The template gives the commander the ability to formulate the function to resource mapping needed to fuse multi-national assets across spatial, time, and functional domains. Once the allocation of functions to resources has taken place, each unit commander will have the same fused tactical picture, complete with the same goals and directives guiding the entire force towards mission accomplishment. Finally, by basing the architecture on Copernicus, the template is only constrained by a flexible doctrine that allows for incremental changes in force structure.

APPENDIX A

This appendix contains the Revised Master Generic Set of Required Operational Functions (ROFs), as outlined in SPAWAR 31 working paper dated 15 December 1988. Each ROF is related to a major grouping of Plan, Observe, Assess, and Execute. The application of the ROFs is to define and analyze the elements of command and control. Each verb used in the ROF set has been defined to eliminate the need for navy jargon. This helps to ensure the ROFs are not inadvertently building in a bias toward any particular time frame, mission area, or system implementation.

Revised Master Generic Set of Required Operational Functions (ROFs) to be Accomplished by a CVBF

1.0(P,A) Plan Force Mission (F,WP)

(Old 1.0 and 2.0)

1.1.(P) **Define Force Mission (F) (OLD 1.1.1)**
(Old 1.1.1; NOTE: Old 1.1 is deleted and all linkages are mapped to NEW 1.1 above)

1.1.1(P) Define Force Mission Objectives (F)

1.1.2(P) Define Warfare Mission Area Requirements of Force Mission (F)

1.1.3(P) Define Force Movement Requirements Associated with the Force Mission (F)

1.2(P,A) **Bound Force Mission (F,WP)**
(Old 1.2 and 1.3 Combined; all linkages to Old 1.2 and Old 1.3 are mapped to the New 1.2 Above)

1.2.1(P) Define Overall Force Composition (F)

1.2.2(P) Define Own System Design Capabilities (F,WP)

1.2.3(P) Define Enemy Forces Expected to be Encountered During Mission (F,WP)

1.2.4(P) Define Enemy System Design Capabilities (F,WP)

1.2.5(P) Define Neutral Presence Expected to be in the Mission Area (F,WP)

1.2.6(P) Define Mission Constraints (F,WP)
(Old 1.3.2)

1.2.6.1(P) Define Constraints on Own Actions (F,WP)
(New; lower level decomposition of old 1.3.2)

1.2.6.2(P) Define Constraints on Enemy Actions (F,WP)
(New; lower level decomposition of Old 1.3.2)

1.2.7(A) Assess Adequacy of Own Planned Warfighting Capabilities with respect to Anticipated Enemy Capabilities (F,WP)
(Old 1.3.1)

1.2.8(A) Assess Need for Support by Non-Organic Sensors or other Resources (F,WP)
(Old 1.3.3)

1.3(P) **Develop Command, Control, and Communications (C3) Plans (F,WP)**
(Old 2.1.8, 2.2 and 2.3)

1.3.1(P) Define Force Command Structure (F)
(Old 2.1.1)

1.3.2(P) Develop Plans for Primary/Secondary WMA Assignments of WPs (F)
(Old 2.2.1 and 2.2.2)

1.3.3(P) Develop Force Disposition Plans (F)
(Old 2.2.4)

1.3.4(P) Develop Communications Plans (F,WP)
(Old 2.4.1)

1.3.5(P) Develop Standard Operating Plans/Procedures (F,WP)
(Old 2.1.4 and old 2.3.1; NOTE: All linkages to old 2.3.1 are mapped to new 1.3.5 above)

1.3.6(P) Develop Plans/Procedures for Resolving Conflicts in System Utilization Outside Primary Warfare Area (F, WP)
(Old 2.2.3)

1.3.7(P) Develop Safety Plans, Policies, Rules and Procedures (F,WP)
(Old 2.3.2)

1.3.8(P) Develop Force-Level Joining Plans/Procedures for Newly Arrived Units (F)
(Old 2.3.3)

1.4(P) **Develop Detailed WMA* Plans (F,WP)**
(Old 2.1; NOTE: Old 2.0 is deleted and all linkages are mapped to new 1.4 above)

1.4.1(P) Develop Force-Level WMA Area of Interest (AOI)/Battle Space Plans (F)
(Old 2.1.2)

1.4.2(P) Develop Force-Level WMA Rules of Engagement (ROE) Plans (F)
(Old 2.1.3)

1.4.3(P) Develop Force-Level WMA Special Duty Assignment Plans (F)
(Old 2.2.5)

1.4.4(P) Develop WMA Surveillance/Reconnaissance Plans and Tactics (F,WP)
(Old 2.1.5)

1.4.5(P) Develop WMA Hard-Kill Engagement Plans and Tactics (F,WP)
(Old 2.1.6)

1.4.6(P) Develop WMA EW/C3CM/Acoustic Warfare Engagement Plans and Tactics (F,WP)
(Old 2.1.7)

1.4.7(P) Develop Detailed Plans and Tactics Unique to a Given WMA (F,WP)
(New; subsumes Old 2.1.9)

* = Includes NWP1A "Fundamental Tasks" (AAW, ASW, ASUW, STK, AMW, and MIW), plus the following "Supporting Tasks" (NSW, INTEL, Ocean Surveillance/Space)

1.5(P) **Develop Logistic Support Plans (F,WP)**
(Old 2.4)

1.5.1(P) Develop Supply Readiness Plans (F,WP)
(Old 2.4.3)

1.5.2(P) Develop Warfighting Equipment Readiness/Damage Control Plans (F,WP)
(Old 2.4.2)

1.5.3(P) Develop Training Readiness Plans (F,WP)
(Old 2.4.4)

1.6(P) **Develop Plans for Post Operations Mission Analysis (F,WP)**
(Old 2.4.5)

2.0(O,A,E) Implement Communications Connectivity (F,WP)

(Old 4.2)

2.1(E) **Establish Communications Networks (F,WP)**
(Old 4.2.1 plus Old 4.2.3)

2.2(E) **Conduct Communications (F,WP)**
(Old 5.4.4; all of the current linkages to Old 5.4.4 are mapped to New 2.2 above)

2.3(O) **Observe Status of Communications (F,WP)**
(Old 4.2.2)

2.4(A) **Assess Status of Communications (F,WP)**
(New)

3.0(O,A, E) Control Force Movements (F,WP)

(1st half of Old 4.0, plus Old 4.1.1)

3.1(O) **Observe Force Navigational Position (F,WP)**
(Old 5.1.1)

3.2(O) **Observe Accurate Measurements of Time (F,WP)**
(Old 5.1.2)

3.3(E) **Execute Force Stationing/Maneuvering Plans (F,WP)**
(New)

3.3.1(E) Execute Ship Stationing/Maneuvering Plans (F,WP)
(Old 4.1.2, plus Old 7.1.1)
(NOTE: Old 7.1.1.2 is deleted and all linkages are mapped to new 3.3.1 above)

3.3.2(E) Execute Submarine Stationing/Maneuvering Plans (F,WP)
(Old 4.1.3)

3.3.3(E) Execute Aircraft Stationing/Maneuvering Plans (F,WP)
(Old 4.1.4 and 4.1.5)
(NOTE: Old 7.1.1.1 is deleted and all linkages are mapped to 3.3.3 above)

3.4(A) **Assess Execution of Force Movements (F)**
(New)

4.0(O,A,E) Maintain Battle Readiness (F,WP)

(2nd half of Old 4.0)

4.1.(O,A,E) **Maintain Supply Readiness (F,WP)**
(Old 4.3)

4.1.1(O) Observe Supply Readiness (F,WP)
(Old 4.3.1)

4.1.2(A) Assess Supply Readiness (F,WP)
(New)

4.1.3(E) Execute Replenishment (F,WP)
(Old 4.3.2)

4.2(O,A,E) **Maintain Readiness of Warfighting Equipment and Platforms (F,WP)**
(Old 4.4)

4.2.1(E) Configure Equipment (F,WP)
(Old 4.4.2)

4.2.2(O) Observe Equipment Configuration /Availability/Battle Damage (F,WP)
(Old 4.4.1)

4.2.3(A) Assess Equipment Readiness/Battle Damage (F,WP)
(New)

4.2.4(E) Execute Equipment Maintenance Plans/Repair Battle Damage (F,WP)
(Old 4.4.3)

4.3(O,A,E) **Maintain Training Readiness (F,WP)**
(Old 4.5)

4.3.1(O) Observe Training Readiness (F,WP)
(Old 4.5.1)

4.3.2(A) Assess Training Readiness (F,WP)
(New)

4.3.3(E) Conduct Training (F,WP)
(Old 4.5.3)

(NOTE: Old 4.5.2 is deleted; and all linkages are mapped to New 4.3.3 above)

5.0(O,A,E) Develop Tactical Picture (F,WP)

(Old 5.0)

5.1(O,A,E) **Develop Environmental Information (F,WP)**
(2nd half of Old 5.1)

5.1.1(O) Acquire Oceanographic Information (F,WP)
(1st half of 5.1.2, further subdivided)

5.1.2(O) Acquire Atmospheric Information (F,WP)
(1st half of 5.1.2, further subdivided)

5.1.3(O) Acquire Historical Environmental Information (F,WP)
(2nd half of Old 5.1.2)

5.1.4(A) Assess Environmental Information (F,WP)
(New)

5.1.5(E) Implement Environmental Considerations into Operations (F,WP)
(2nd half of old 5.1.2, further subdivided)

5.2(O,E) **Develop Integrated Tactical Information (F,WP)**
(Old 5.4)

5.2.1(E) Execute Non-Organic Surveillance/Reconnaissance Plan (F,WP)
(Old 5.2.1)

(NOTE: Old 5.2 is deleted and all linkages are split between new 5.2.1 and 5.2.2)

5.2.2(E) Execute Organic Surveillance/Reconnaissance Plan (F, WP)

5.2.2.1(E) Conduct Search with Organic Sensors (F, WP)
(Old 5.3.1)

(NOTE: Old 5.3.1.1 and 5.3.1.2 are deleted and all linkages are mapped to new 5.2.2.1 above)

5.2.2.2(O) Identify Contacts (F,WP)
(Old 5.3.2)

5.2.2.3(O) Track Contacts (F,WP)
(Old 5.3.3)

5.2.3(E) Establish a Common Force Coordinate System (Gridlock) (F)
(Old 5.4.1)

5.2.4(O) Correlate INTEL Information as received (F,WP)
(Old 5.4.2.1)

5.2.5(O) Correlate All-Source Track Information as Received (F,WP)
(Old 5.4.2.)

5.2.5.1(O) Correlate Non-Organic to Non-Organic Track Information as Received (F,WP)
(Old 5.4.2.2)

5.2.5.2(O) Correlate Non-Organic to Organic Track Information as Received (F,WP)
(Old 5.4.2.3)

5.2.5.3(O) Correlate Organic to Organic Track Information as Received (F,WP)
(Old 5.4.2.4)

5.3(O) **Generate Tactical Picture (F,WP)**
(Old 5.4.3 is deleted and all linkages are mapped to new 5.4 above)

6.0(A) Assess Tactical Situation (F,WP)

(1st half of Old 6.0)

6.1(A) Assess Developing Threat (F,WP)

(Old 6.1)

6.1.1(A) Evaluate Threat Warnings and Reports as Received (F,WP)
(Old 6.1.1)

(NOTE: Old 6.1.2 is deleted; all linkages are mapped to new 6.1.1 above)

6.1.2(A) Assess Implications of Rules of Engagement (ROE) to Unfolding Tactical/Threat Situation (F,WP)
(Old 6.4.3)

(NOTE: Old 6.2.1 is deleted and all linkages are mapped to new 6.1.2 above)
(NOTE: Old 6.4 is deleted and all linkages are mapped to new 6.1.2 above)
(NOTE: Old 6.4.1 is deleted and all linkages are mapped to new 6.1.2 above)
(NOTE: Old 6.4.2 is deleted and all linkages are mapped to new 6.1.2 above)

6.1.3(A) Prioritize Incoming Threats (F,WP)
(Old 6.3.2)

(NOTE: Old 6.3.1 is deleted and all linkages are mapped to 6.1.3 above)
(NOTE: Old 6.2 is deleted and all linkages are mapped to new 7.4.1 below)

6.1.4(A) Assess Impact of Neutral Presence/Activities (F,WP)
(New)

6.2(A) **<u>Assess Own* and Enemy Effectiveness Before and During Engagement (F,WP)</u>**
(Old 3.1)

6.2.1(A) Assess Effectiveness of Own C3 Plans and Doctrines Before and During Engagement (F,WP)
(Old 3.1.4)

(Note: 2nd half of Old 3.1.1 is deleted and all linkages thereto are mapped to new 6.2.1 above)

6.2.2(A) Assess Effectiveness of Own Surveillance Plans and Doctrines Before and During Engagement (F,WP)
(1st half of Old 3.1.1)

6.2.3(A) Assess Effectiveness of Own Hard-Kill Engagement Plans and Doctrines During Engagement (F,WP)
(Old 3.1.3)

(NOTE: Old 3.1.3.1 is deleted; all linkages are mapped to new 6.2.3 above)
(NOTE: Old 3.1.3.2 is deleted; all linkages are mapped to new 6.2.3 above)
(NOTE: Old 3.1.3.3 is deleted; all linkages are mapped to new 6.2.3 above)

6.2.4(A) Assess Effectiveness of Own EW/C3CM/Acoustic Warfare Engagement Plans During Engagement (F,WP)
(New)

6.2.5(A) Assess Overall Effectiveness of the Enemy Attack During Engagement (F,WP)
(Old 3.2.2)

(NOTE: Old 3.2 is deleted and all linkages are mapped to 6.2.5 above)
(NOTE: Old 3.2.1 is deleted and all linkages are mapped to new 6.2.5 above)

*Own includes allies as appropriate

6.2.6(A) Assess Vulnerabilities Exhibited by the Enemy During Engagement (F,WP)
(Old 3.2.3)

6.3(E,A) **Assess Own Effectiveness at the Completion of the Engagement/Mission (F,WP)**
(Old 3.3)

6.3.1(E) Collect Data Required for Post-Engagement Mission Assessment (F,WP)
(Old 3.3.1)

6.3.2(A) Assess Own Effectiveness in Supporting Mission Accomplishment at Completion of Engagement (F,WP)
(Old 3.3.2)

(NOTE: Old 3.3.4 is deleted and all its linkages are mapped into New 6.3.2)
(NOTE: Old 3.3.5 is deleted and all of its linkages are mapped into New 6.3.2)

7.0 (E) Execute Engagement Actions (F,WP)

(2nd half of Old 6.0 and all of Old 7.0)

7.1(E) **Execute Force-Level Control Actions During Engagement (F)**
(Old 6.5)

7.1.1(E) Execute Force-Level Readiness/Warning Conditions (F)
(Old 6.2.2)

7.1.2(E) Execute Weapons Free/Weapons Tight at the Force Level (F)
(Old 6.5.1)

7.1.3(E) Authorize at the Force Level the Use of Special Weapons for Hard-Kill Engagements (F)
(Old 6.5.4)

7.2(E) **Implement Pre-Planned Engagement Doctrines (F,WP)**
(Old 7.1.2)

(NOTE: Old 7.1.2.1 is deleted and all linkages are mapped to new 7.2 above)
(NOTE: Old 7.1.2.2 is deleted and all linkages are mapped to new 7.2 above)

7.3(E) **Enforce Coordination Procedures During Engagement (F,WP)**
(Old 6.5.6 plus Old 7.1.3)

7.4(E) **Enforce Safety Procedures During Engagement (F,WP)**
(Old 6.5.5 plus Old 7.1.4)

7.5(E) **Engage the Threat (F, WP)**
(Old 7.0)

7.5.1(E) Execute Engagements with Hard-Kill Systems (F, WP)
(Old 6.5.2 and 7.2)

7.5.1.1(E) Execute Close-In Self-Defensive Engagements with Hard-Kill Systems (F, WP)
(Old 7.2.1)

7.5.1.2(E) Execute Area Engagements with Hard-Kill Weapons Systems (WP)
(Old 6.5.2 and 7.2.2)

7.5.1.2.1(E) Execute Outer Area Engagements with Hard-Kill Weapons Systems (F, WP)
(Old 6.5.2.1 and 7.2.2.1)

7.5.1.2.2(E) Execute Inner Area Engagements with Hard-Kill Weapons Systems (F, WP)
(Old 6.5.2.2 and 7.2.2.2)

7.5.2(E) Execute Electronic Warfare/Acoustic Warfare Engagements (F, WP)
(Old 6.5.3 and 7.3)

7.5.2.1(E) Execute Close-In Self-Defensive EW/C3CM and Acoustic Warfare Engagements (F, WP)
(Old 7.3.1)

7.5.2.1.1(E) Execute Close-In Self-Defensive EW/C3CM Engagements (F,WP)
(New)

7.5.2.1.2(E) Execute Close-In Self-Defensive Acoustic Warfare Engagements (F,WP)
(New)

7.5.2.2(E) Execute Area Electronic Warfare/C3CM and Acoustic Warfare Engagements (F, WP)
(Old 6.5.3, 6.5.3.1, 6.5.3.2 and 7.3.2)

7.5.2.2.1(E) Execute Operational Security (OPSEC) Operations (F, WP)
(Old 6.5.3 and 7.3.2.1)

7.5.2.2.2(E) Execute Operational Deception (OPDEC) Operations (F, WP)
(Old 6.5.3 and 7.3.2.2)

7.5.2.2.3(E) Execute Area Electronic Jamming Engagements (F, WP)
(Old 6.5.3 and 7.3.2.3)

7.5.2.2.4(E) Execute Area Acoustic Warfare Engagements (WP)
(New)

7.5.4(E) Execute Non-Combat Operations (F, WP)
(Old 7.5)

7.6(O) **Observe Engagement Status/Results (F,WP)**
(Old 7.1.5)

(NOTE: Old 7.1.5.1 and 7.1.5.2 are deleted and all linkages are mapped to new 7.6 above)

GENERAL NOTES:

(1) The 15 DEC 88 Revised Master Generic ROFs are annotated to indicate the changes that have been made to the 30 MAR 88 Master Generic ROFs.

(2) The letter codes incorporated into the ROF short-titles have the following meanings:

(P) = The indicated ROF is a "PLAN"-type ROF
(O) = The indicated ROF is an "OBSERVE"-type ROF
(A) = The indicated ROF is an "ASSESS"-type ROF
(E) = The indicated ROF is an "EXECUTE"-type ROF

(F) = The indicated ROF is a Force-level ROF
(F,WP) = The indicated ROF is both a Force-Level ROF and A Weapons Platform-Level ROF

(3) A Glossary of action verbs for ROF generation follows below. It explictly defines the verbs used in this Master Generic ROF set. Additional verb definitions are provided for the generation of WMA specific ROFs as necessary.

GLOSSARY OF ACTION VERBS FOR ROF GENERATION

1. ACQUIRE - To come into possession or control of.

2. ALLOCATE - To apportion for a specific purpose or to particular persons or things.

3. ANALYZE - To study or determine the nature and relationship of the parts of by analysis.

4. APPLY - To put into operation or effect.

5. ARCHIVE - To file or collect information in records, or documents.

6. ASSESS - To determine the nature of e.g. importance, size, value, etc.

7. ASSIGN - To transfer to another.

8. ATTACK - To set upon with violent force.

9. AUTHORIZE - To establish by or as if by authority.

10. BOUND - To set the limits or bounds to.

11. CHARACTERIZE - To describe the character or quality of.

12. CLASSIFY - To organize or arrange according to class or category.

13. COLLECT - To bring together into one body or place.

14. COMMUNICATE - To transmit information, thought, or feeling so that it is satisfactorily received, or understood.

15. COMPARE - To examine so as to note the similarities or differences of.

16. COMPILE - To collect and edit into a volume.

17. CONDUCT - To guide or lead.

18. CONFIGURE - To set up for operation especially in a particular way.

19. CONTROL - To exercise authority or influence over.

20. COOPERATE - To associate with another or others for mutual benefit.

21. COORDINATE - To bring into common action, movement, or condition.

22. CORRELATE - To show a causal relationship between, to present or set forth so as to show relationship.

23. COUNTER - To move or act in opposition to.

24. CREATE - To produce or bring about by a course of action or behavior.

25. CUE - To give a hint or prompt to.

26. DECEIVE - To cause to believe what is not true.

27. DECIPHER - To convert into intelligible form.

28. DECOY - To lure or entice.

29. DEFINE - To describe the nature or basic qualities of.

30. DELEGATE - To entrust to another.

31. DEPLOY - To station systematically over an area.

32. DESCRIBE - To represent or give an account of in words.

33. DETECT - To discover or discern the existence, or fact of.

34. DETERMINE - To settle or decide by choice of alternatives or possibilities.

35. DEVELOP - To set forth or make clear by degrees or in detail.

36. DISCRIMINATE - To mark or perceive the distinguishing or peculiar features of.

37. DISRUPT - To interrupt or impede the usual course or harmony of.

38. DOCUMENT - To furnish documentary evidence of.

39. EMPLOY - To make use of.

40. ENCRYPT - To convert into cipher or code form.

41. ENFORCE - To compel observance of or obedience to.

42. ENGAGE - To enter into conflict or contest with.

43. ENHANCE - To add or contribute to as to improve or increase.

44. ESTABLISH - To bring into existence.

45. ESTIMATE -.To determine tentatively or approximately the value, worth, significance, size, extent, or nature of.

46. EVADE - To escape or avoid by cunning.

47. EVALUATE - To determine the significance or worth of.

48. EXCHANGE - To engage in an act of reciprocal giving and receiving.

49. EXECUTE - To carryout fully a declared intent or plan.

50. EXERCISE - To make effective in action.

51. FORMULATE - To put into a systemized statement or expression.

52. GENERATE - To define or originate by the application of one or more rules or operations to given quantities.

53. IDENTIFY - To find out the distinct origin, nature, or definitive elements of.

54. IMPLEMENT - To give practical effect to and ensure of actual fulfillment by concrete measures.

55. INFORM - To give information, knowledge, or understanding.

56. INITIATE - To cause or facilitate the beginning of.

57. INTERRUPT - To break the uniformity or continuity of.

58. JAM - To make unintelligible by sending out interfering signals or messages.

59. LEARN - To gain information, knowledge, or understanding.

60. LIMIT - To restrict to set bounds or limits.

61. LOCALIZE - To attribute to a specific locality.

62. LOCATE - To determine or specify the position or boundaries of.

63. MAINTAIN - To preserve from failure or decline.

64. MANAGE - To handle or direct with a degree of skill.

65. MANEUVER - To alter the tactical placement of.

66. MEASURE - To estimate or appraise by a criterion.

67. MERGE - To combine, as sets of data.

68. MODIFY - To make basic or fundamental changes in.

69. MONITOR - To keep watch over: Supervise.

70. NAVIGATE - To operate or control the course of.

71. OBSERVE - To come to realize or know through directed careful analytic attention or consideration of noted facts.

72. OBTAIN - To gain or attain usually by planned action or effort.

73. ORDER - To give an order to: command.

74. PARTITION - To divide into parts or shares.

75. PLAN - To devise a detailed formulation for or project the realization or achievement of.

76. POSITION - To put in proper position by the act of placing or arranging.

77. POSTULATE - To assume or claim as true, existent, or necessary.

78. PREDICT - To declare in advance: foretell on the basis of observation, experience, or scientific reason.

79. PREPARE - To make ready beforehand for some purpose, use, or activity.

80. PRIORITIZE - To arrange or deal with in order of importance.

81. PROTECT - To cover or shield from exposure, injury, or destruction.

82. RECEIVE - To come into possession of.

83. RECONSTITUTE - To restore to a former condition.

84. RECONSTRUCT - To reestablish or reassemble.

85. RELATE - To show or establish logical or causal connection between.

86. REPAIR - To restore to sound condition after damage or injury.

87. REPORT - To give an account of.

88. RESOLVE - To work out the resolution of, to deal with successfully.

89. SCHEDULE - To appoint, assign or designate for a fixed time.

90. SEARCH - To examine in order to find something lost or concealed.

91. SELECT - To take by preference from a number or group of.

92. SEND - To cause to be carried to a destination.

93. SORT - To arrange according to characteristics.

94. SPECIFY - To state explicitly.

95. STORE - To reserve or put away for future use.

96. SUPPLY - To make available for use or equip with.

97. SURVEIL - To keep close watch over.

98. SUSTAIN - To give support or relief to. To supply with sustenance.

99. TAILOR - To make or adapt to suit a special need or purpose.

100. TEST - To apply a test as a means of analysis or diagnosis.

101. TRACK - To monitor the course of.

102. TRAIL - To follow the traces of.

103. TRAIN - To teach so as to make fit, qualified, or proficient.

104. TRANSFORM - To change the composition, structure, character, or condition of.

105. UPDATE - To bring up to date: make current.

APPENDIX B

The framework of the Multi-National Coordination Process was constructed using the Computer Aided Systems Engineering (CASE) methodology. The CASE tool used was the SPAWAR 31 standard, Design/IDEF 1.5, executed on a Macintosh computer. Design/IDEF is more than a set of drawings. It is a data base of functional processes and associated data flows.

Each Design/IDEF drawing is broken down into further components, as listed by the number in the lower righthand corner of each functional box (i.e. 1, 1.1, 1.1.1). Each functional box has inputs from the left, controls of those inputs from the top, mechanisms for the inputs on the bottom, and finally outputs to the right.

USED AT:	AUTHOR: Darren L. Turner, LT, USN	DATE: 2/3/92	X	WORKING	READER	DATE	CONTEXT:
NPGS for Thesis	PROJECT: Generic Multi-National Force Architecture	REV:		DRAFT			
				RECOMMENDED			
	NOTES: 1 2 3 4 5 6 7 8 9 10			PUBLICATION			

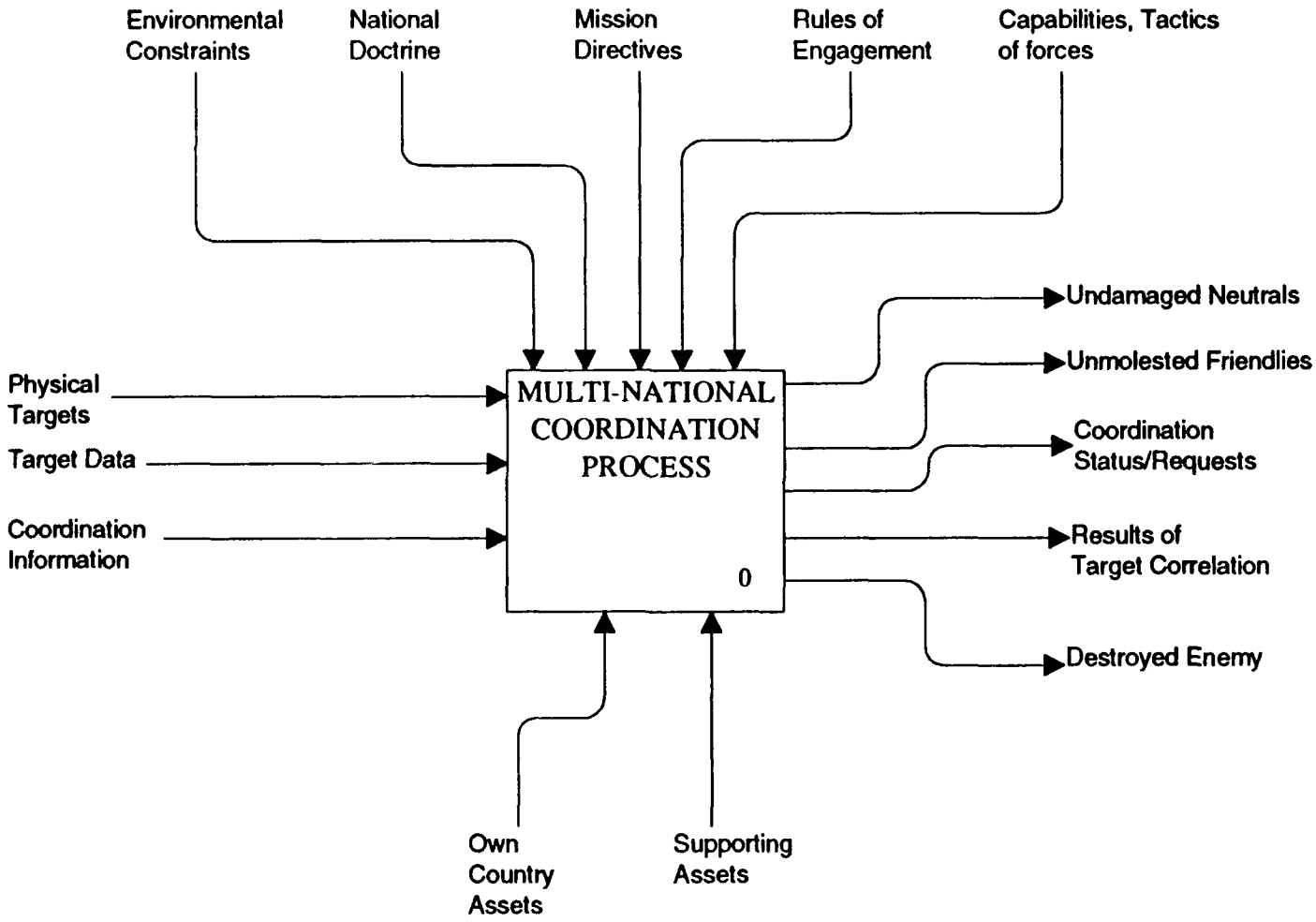

Purpose: To develop a Generic Multi-National Architecture
Viewpoint: As A Graduate Student for a Thesis

NODE: -0	TITLE: Multi-National Generic Architecture	NUMBER:

USED AT:	AUTHOR: Darren L. Turner, LT, USN	DATE: 2/3/92	X	WORKING	READER	DATE	CONTEXT:
NPGS for Thesis	PROJECT: Generic Multi-National Force Architecture	REV:		DRAFT			
				RECOMMENDED			
	NOTES: 1 2 3 4 5 6 7 8 9 10			PUBLICATION			

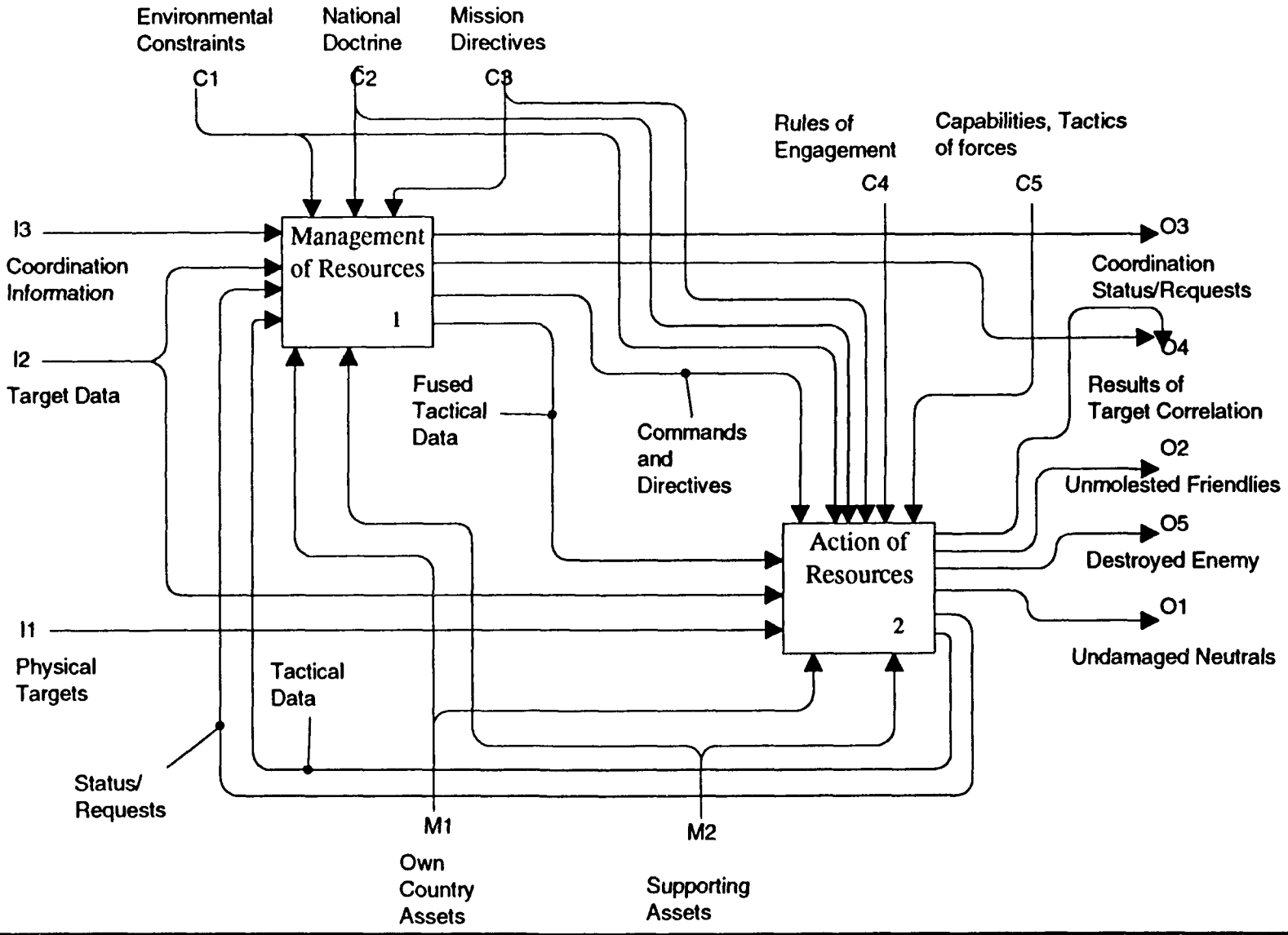

NODE: 0	TITLE: MULTI-NATIONAL COORDINATION PROCESS	NUMBER:

USED AT:	AUTHOR: Darren L. Turner, LT, USN	DATE: 2/3/92	X	WORKING	READER	DATE	CONTEXT:
NPGS for Thesis	PROJECT: Generic Multi-National Force Architecture	REV:		DRAFT			
				RECOMMENDED			
	NOTES: 1 2 3 4 5 6 7 8 9 10			PUBLICATION			

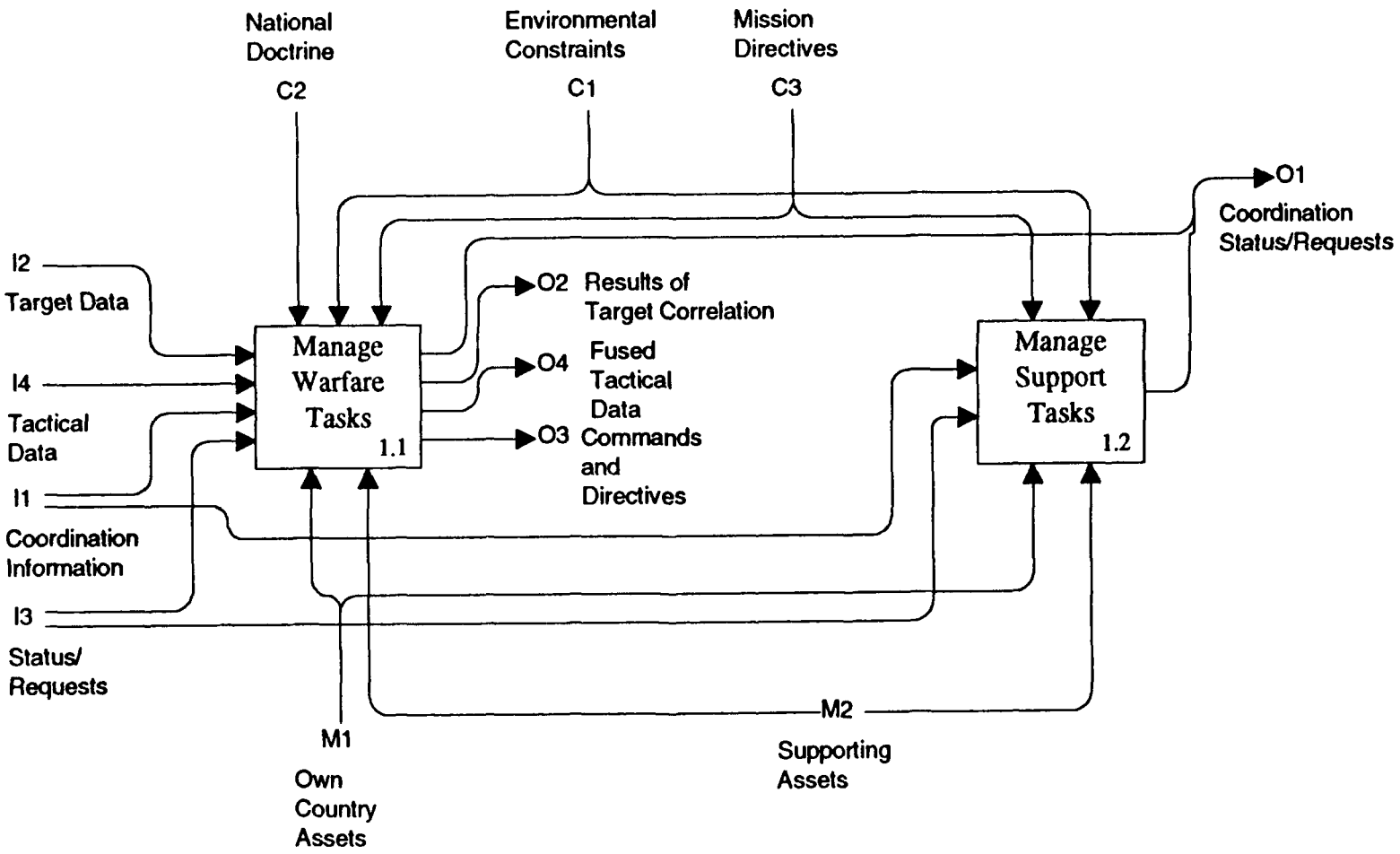

NODE: 1	TITLE: Management of Resources	NUMBER:

USED AT:	AUTHOR: Darren L. Turner, LT, USN	DATE: 2/3/92	X	WORKING	READER	DATE	CONTEXT:
NPGS for Thesis	PROJECT: Generic Multi-National Force Architecture	REV:		DRAFT			
				RECOMMENDED			
	NOTES: 1 2 3 4 5 6 7 8 9 10			PUBLICATION			

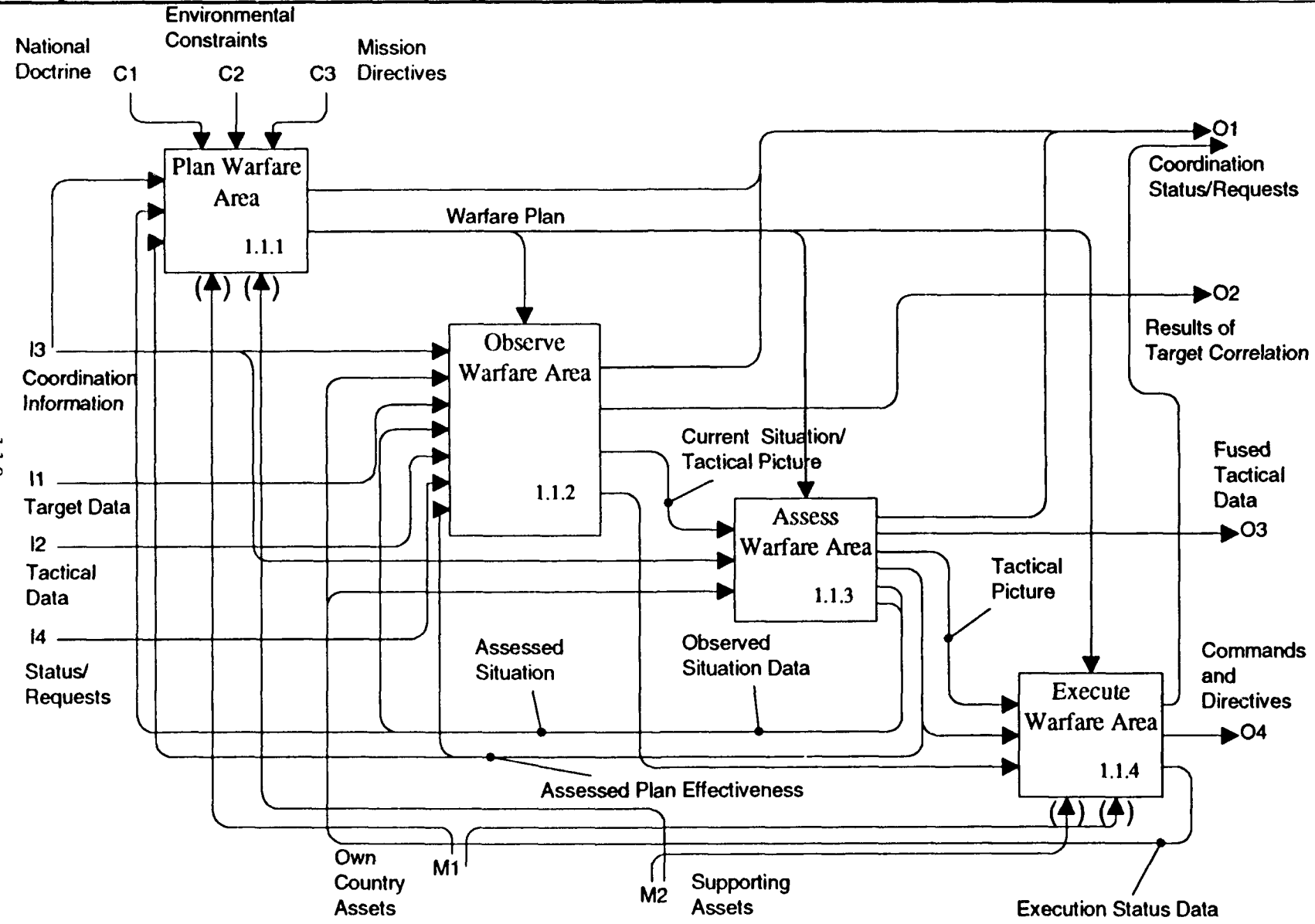

NODE: 1.1	TITLE: Manage Warfare Tasks	NUMBER:

USED AT:	AUTHOR: Darren L. Turner, LT, USN	DATE: 2/3/92	X	WORKING	READER	DATE	CONTEXT:
NPGS for Thesis	PROJECT: Generic Multi-National Force Architecture	REV:		DRAFT			
				RECOMMENDED			
	NOTES: 1 2 3 4 5 6 7 8 9 10			PUBLICATION			

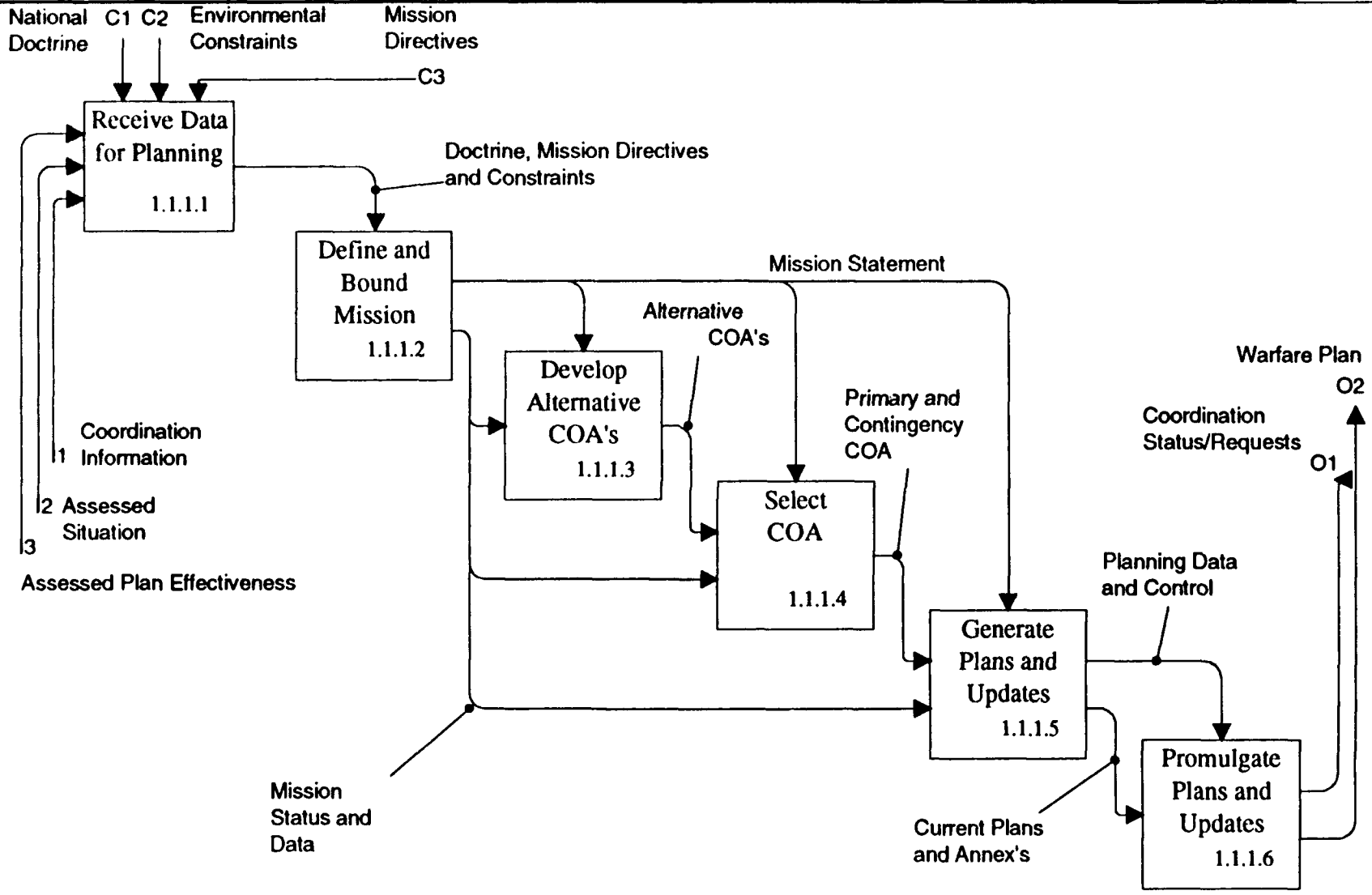

NODE: 1.1.1	TITLE: Plan Warfare Area	NUMBER:

USED AT:	AUTHOR: Darren L. Turner, LT, USN	DATE: 2/3/92	X	WORKING	READER	DATE	CONTEXT:
NPGS for Thesis	PROJECT: Generic Multi-National Force Architecture	REV:		DRAFT			
				RECOMMENDED			
	NOTES: 1 2 3 4 5 6 7 8 9 10			PUBLICATION			

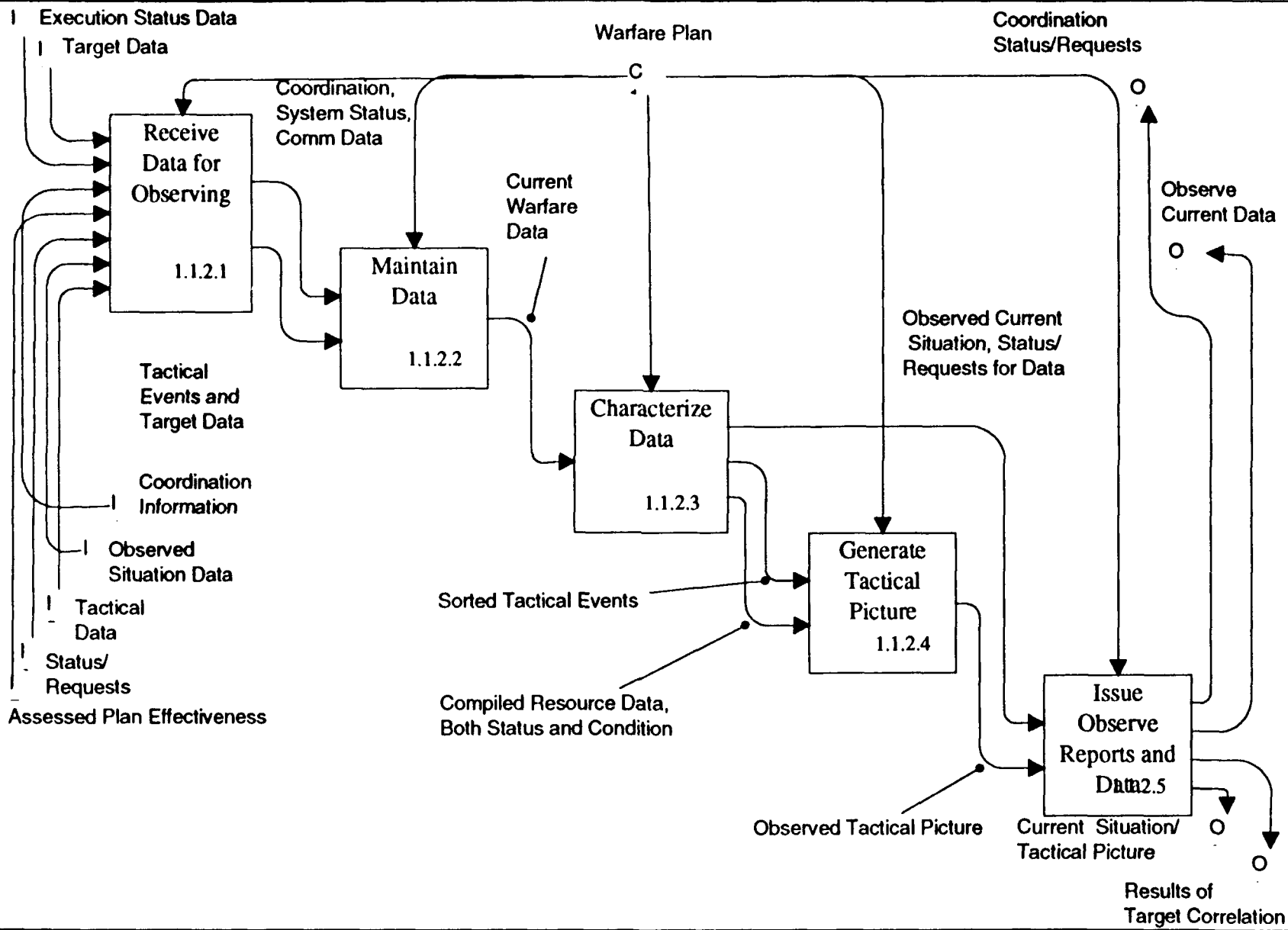

NODE: 1.1.2	TITLE: Observe Warfare Area	NUMBER:

USED AT:	AUTHOR: Darren L. Turner, LT, USN	DATE: 2/3/92	X	WORKING	READER	DATE	CONTEXT:
NPGS for Thesis	PROJECT: Generic Multi-National Force Architecture	REV:		DRAFT			
				RECOMMENDED			
	NOTES: 1 2 3 4 5 6 7 8 9 10			PUBLICATION			

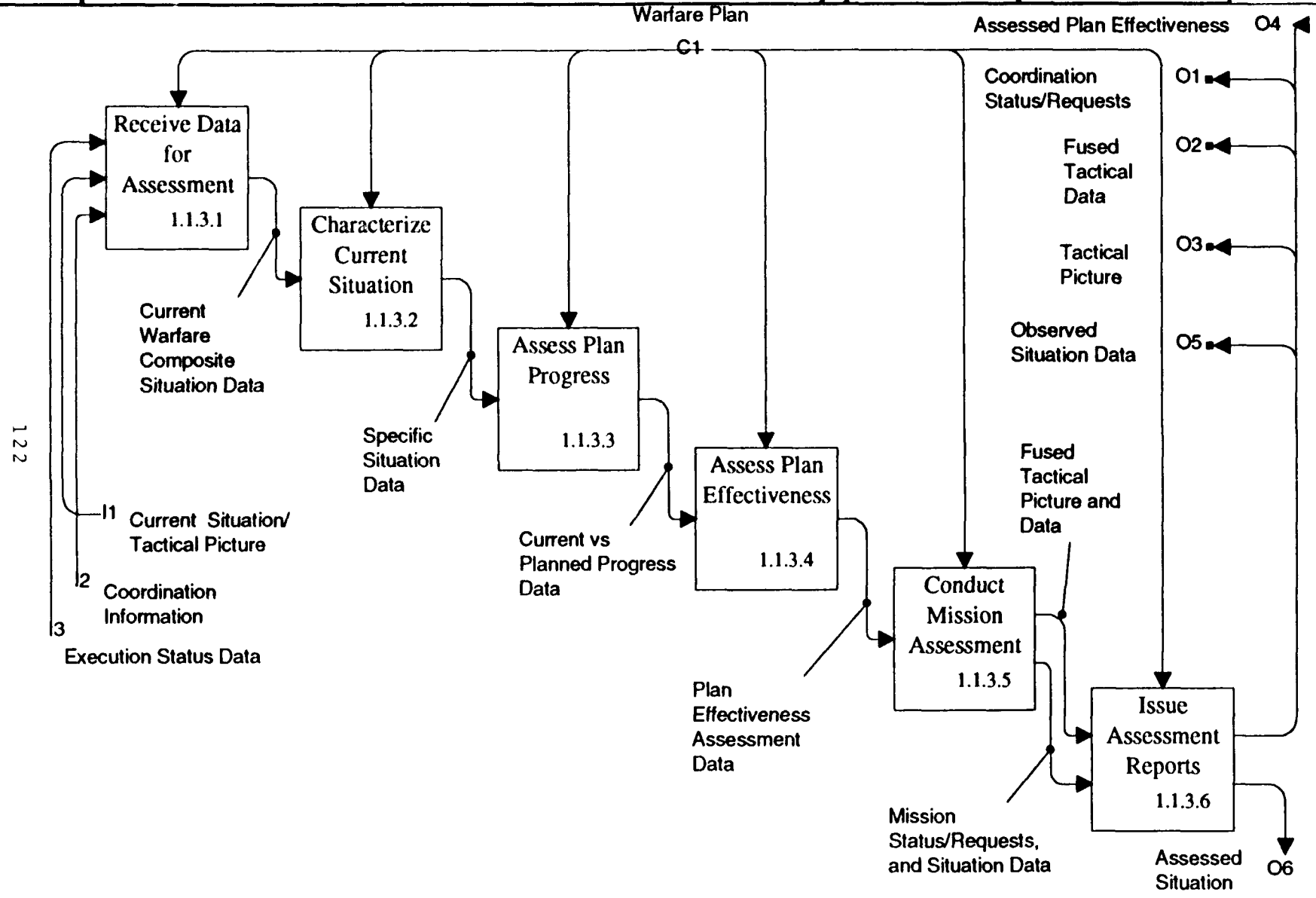

NODE: 1.1.3	TITLE: Assess Warfare Area	NUMBER:

USED AT:	AUTHOR: Darren L. Turner, LT, USN	DATE: 2/4/92	X	WORKING	READER	DATE	CONTEXT:
NPGS for Thesis	PROJECT: Generic Multi-National Force Architecture	REV:		DRAFT			
	NOTES: 1 2 3 4 5 6 7 8 9 10			RECOMMENDED			
				PUBLICATION			

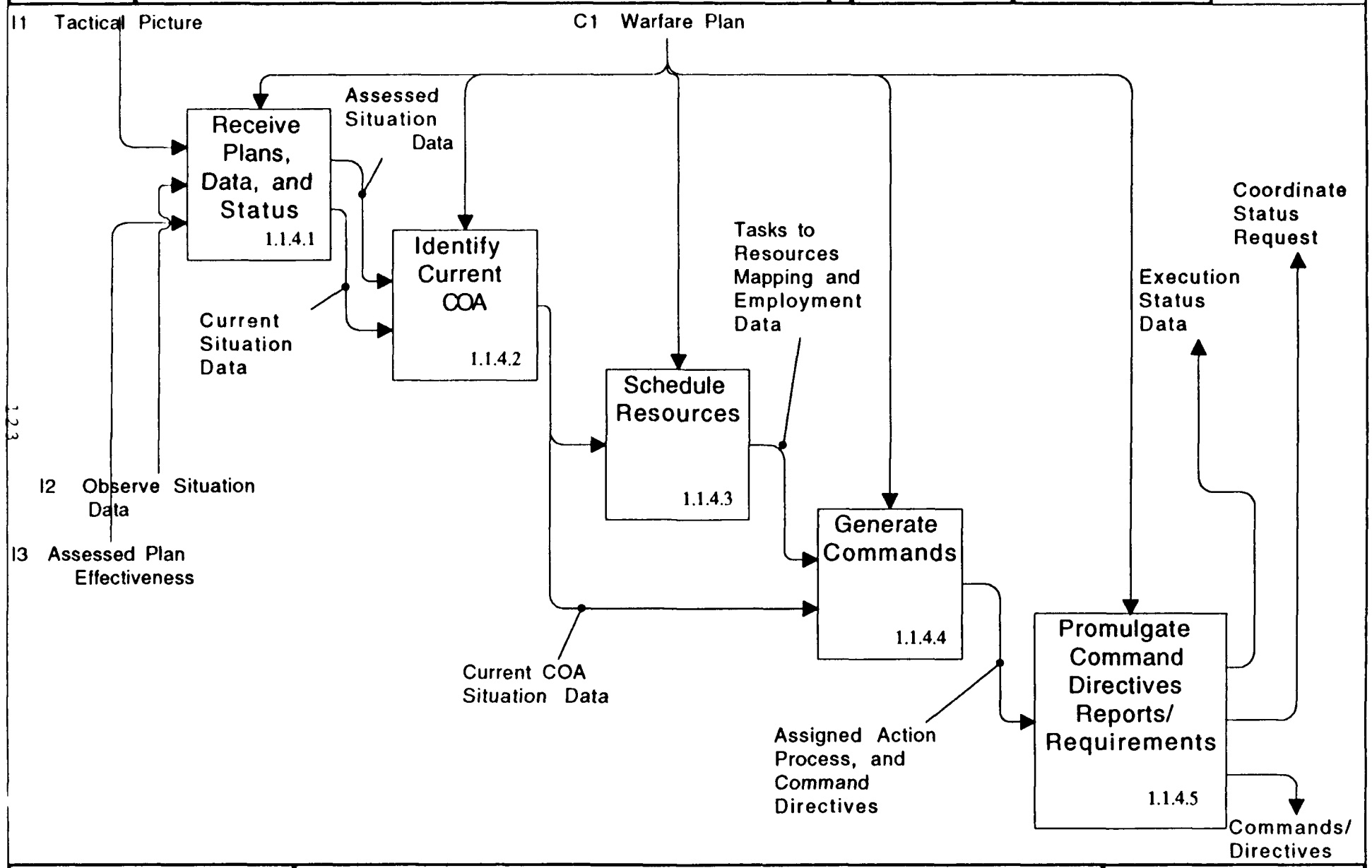

NODE: 1.1.4	TITLE: Execute Warfare Area	NUMBER:

USED AT:	AUTHOR: Darren L. Turner, LT, USN	DATE: 2/3/92	X	WORKING	READER	DATE	CONTEXT:
NPGS for Thesis	PROJECT: Generic Multi-National Force Architecture	REV:		DRAFT			
				RECOMMENDED			
	NOTES: 1 2 3 4 5 6 7 8 9 10			PUBLICATION			

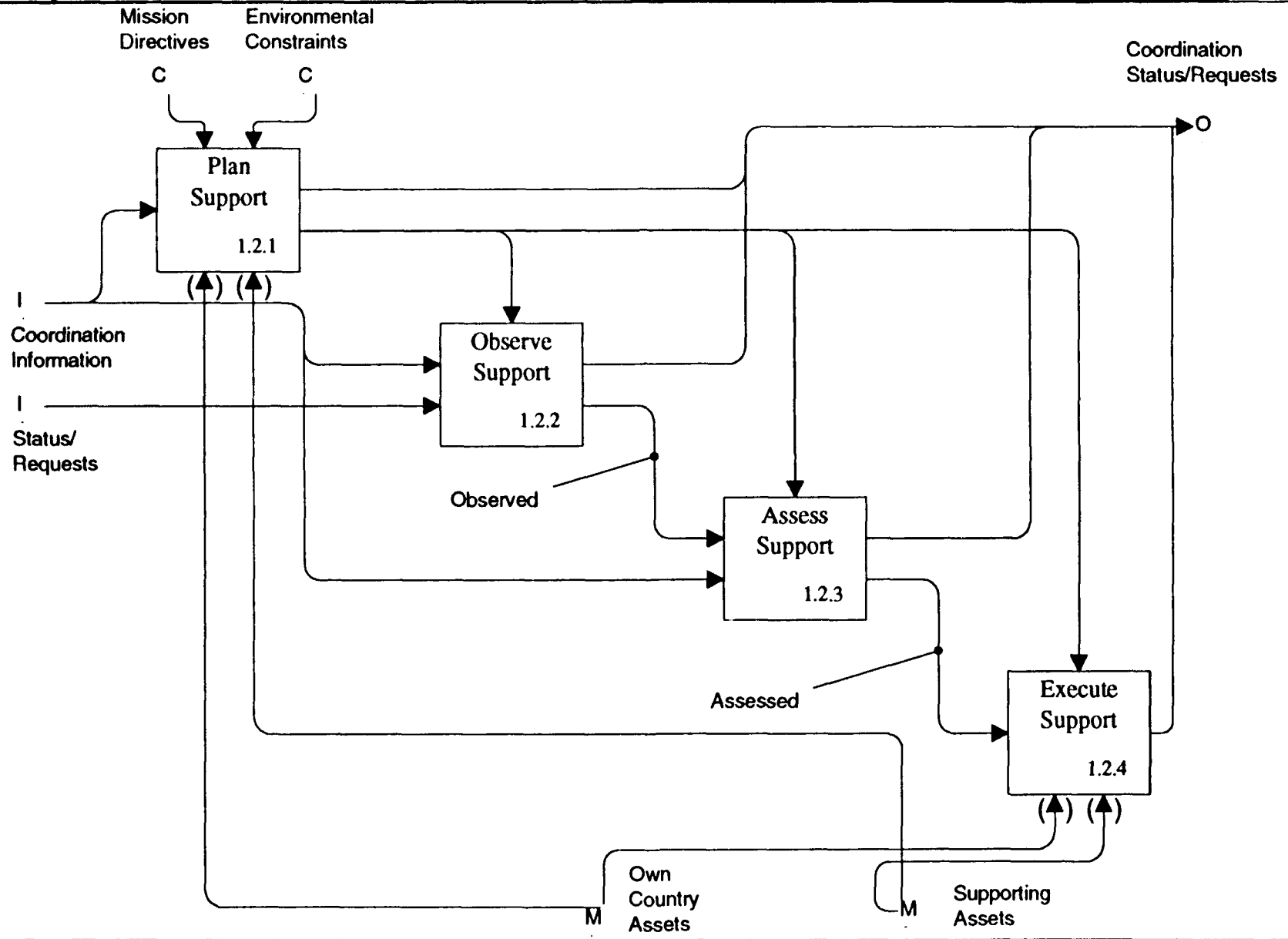

NODE: 1.2	TITLE: Manage Support Tasks	NUMBER:

USED AT: NPGS for Thesis	AUTHOR: Darren L. Turner, LT, USN PROJECT: Generic Multi-National Force Architecture NOTES: 1 2 3 4 5 6 7 8 9 10	DATE: 2/4/92 REV:	X	WORKING	READER DATE	CONTEXT:
				DRAFT		
				RECOMMENDED		
				PUBLICATION		

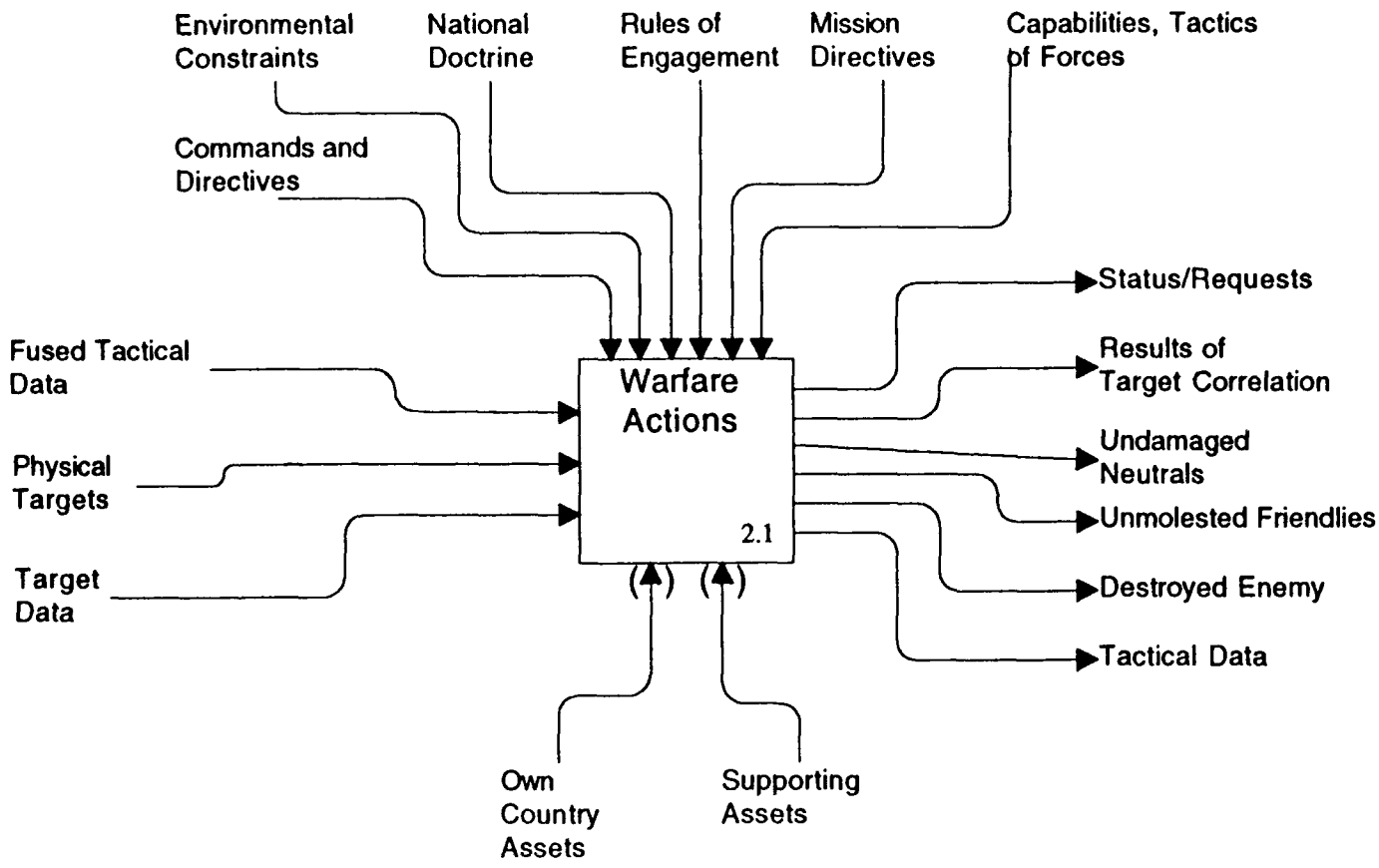

NODE: 2	TITLE: Action of Resources	NUMBER:

USED AT: NPGS for Thesis	AUTHOR: Darren L. Turner, LT, USN PROJECT: Generic Multi-National Force Architecture NOTES: 1 2 3 4 5 6 7 8 9 10	DATE: 2/4/92 REV:	X	WORKING	READER	DATE	CONTEXT:
				DRAFT			
				RECOMMENDED			
				PUBLICATION			

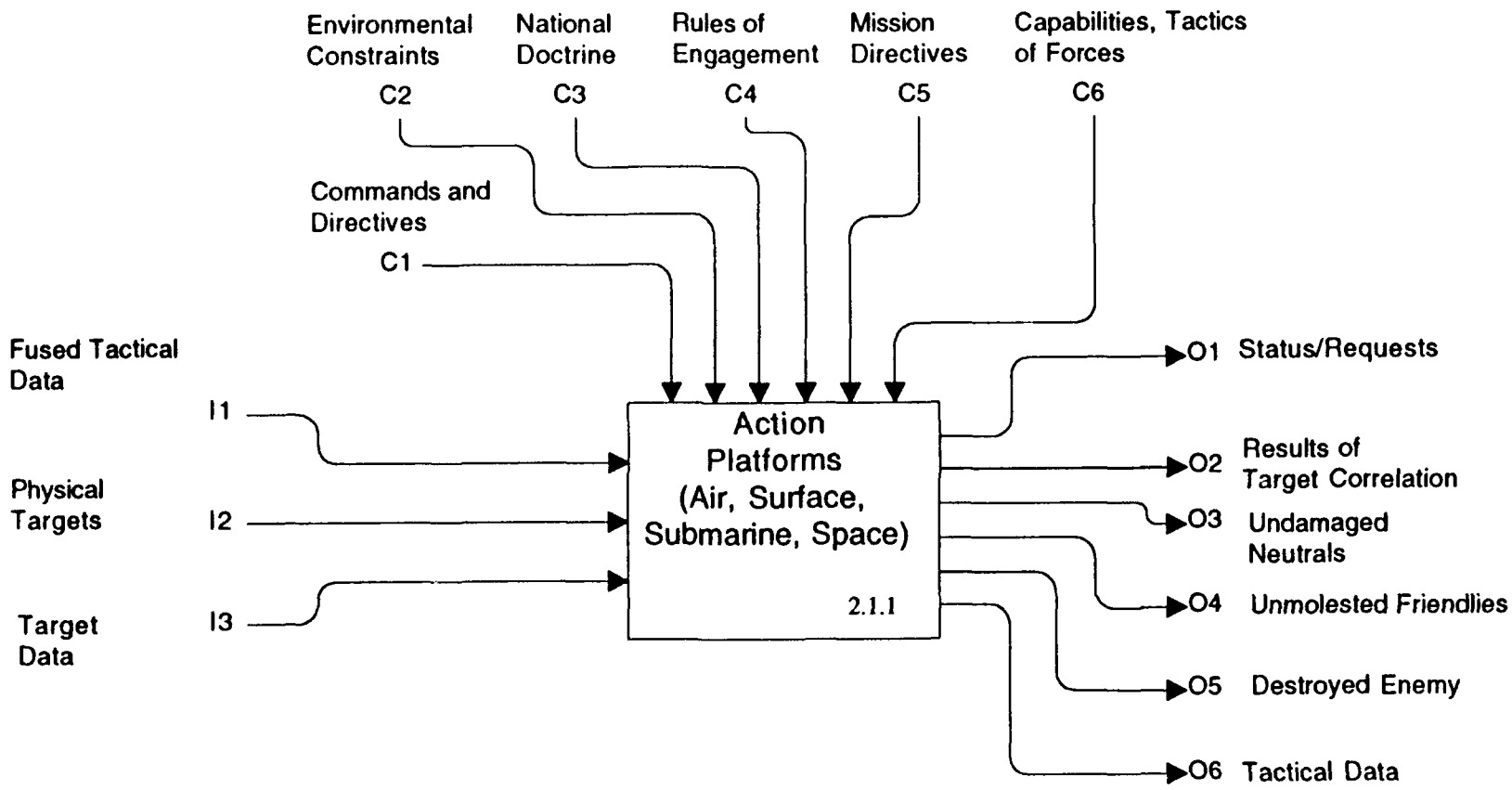

NODE: 2.1	TITLE: Warfare Actions	NUMBER:

USED AT: NPGS for Thesis	AUTHOR: Darren L. Turner, LT, USN PROJECT: Generic Multi-National Force Architecture NOTES: 1 2 3 4 5 6 7 8 9 10	DATE: 2/4/92 REV:	X WORKING	READER	DATE	CONTEXT:
			DRAFT			
			RECOMMENDED			
			PUBLICATION			

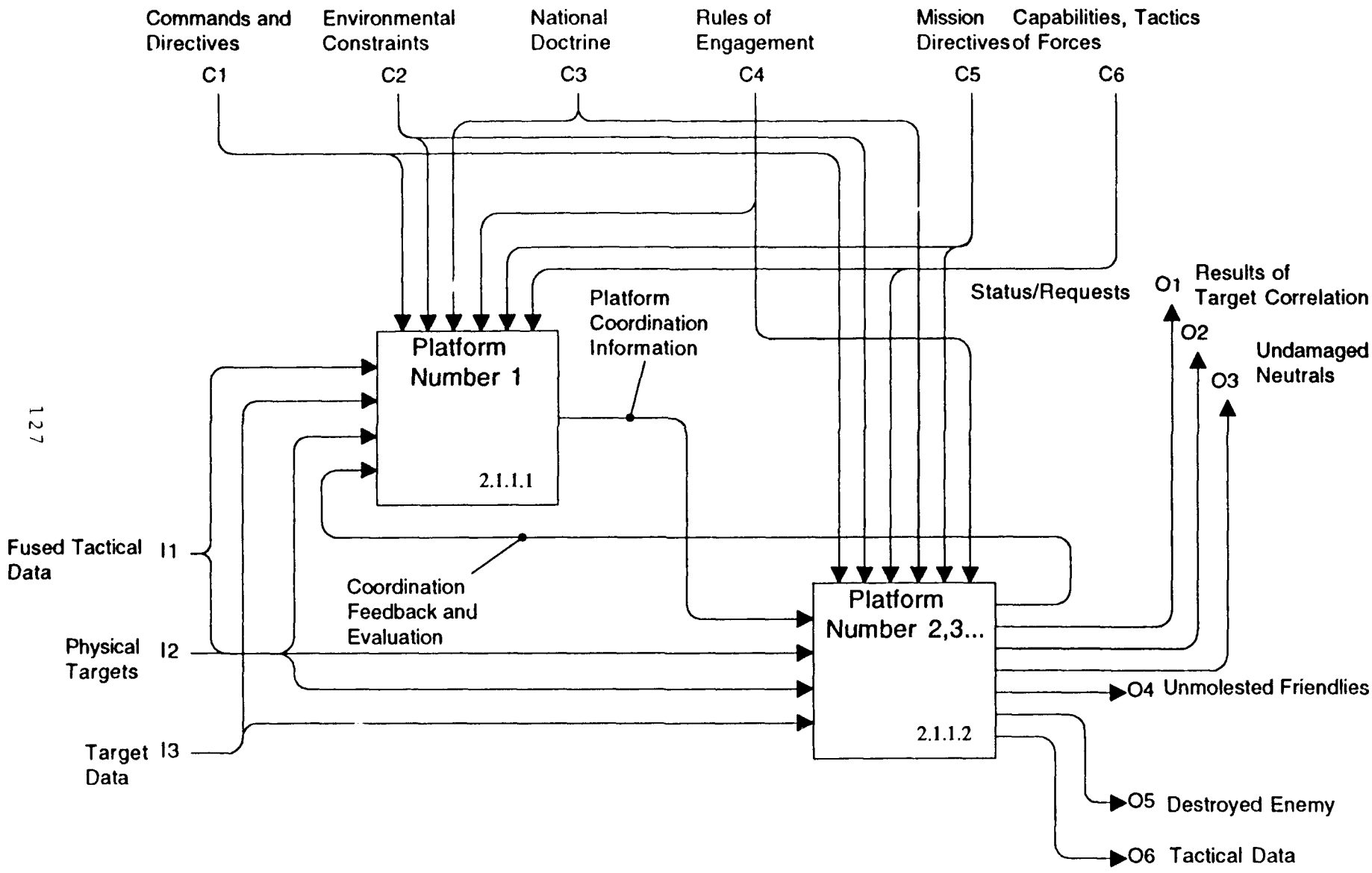

NODE: 2.1.1	TITLE: Action Platforms (Air, Surface, Submarine, Space	NUMBER:

USED AT: NPGS for Thesis	AUTHOR: Darren L. Turner, LT, USN PROJECT: Generic Multi-National Force Architecture NOTES: 1 2 3 4 5 6 7 8 9 10	DATE: 2/4/92 REV:	X WORKING	READER DATE	CONTEXT:
			DRAFT		
			RECOMMENDED		
			PUBLICATION		

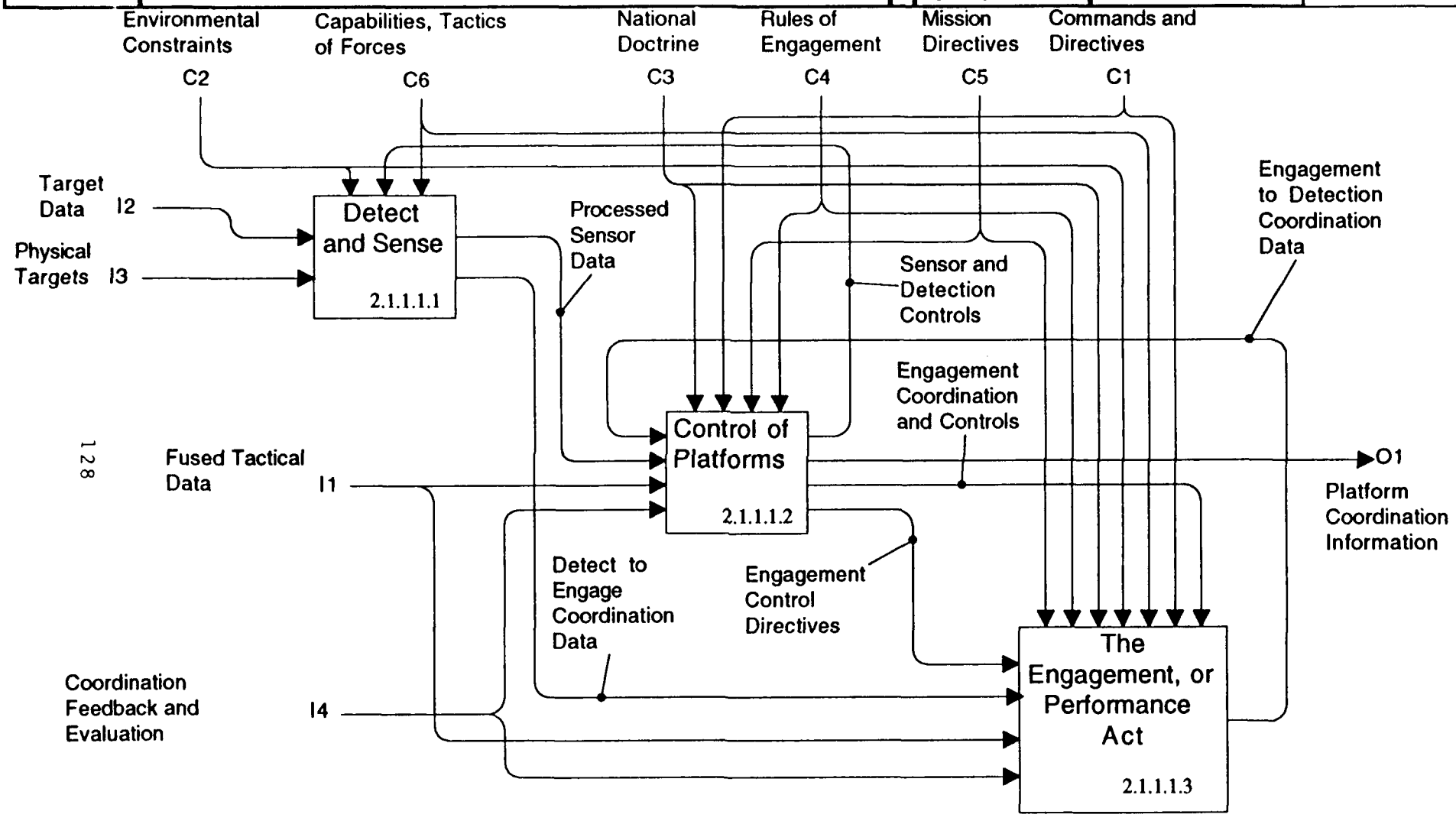

NODE: 2.1.1.1	TITLE: Platform Number 1	NUMBER:

USED AT: NPGS for Thesis	AUTHOR: Darren L. Turner, LT, USN PROJECT: Generic Multi-National Force Architecture NOTES: 1 2 3 4 5 6 7 8 9 10	DATE: 2/4/92 REV:	X WORKING	READER	DATE	CONTEXT:
			DRAFT			
			RECOMMENDED			
			PUBLICATION			

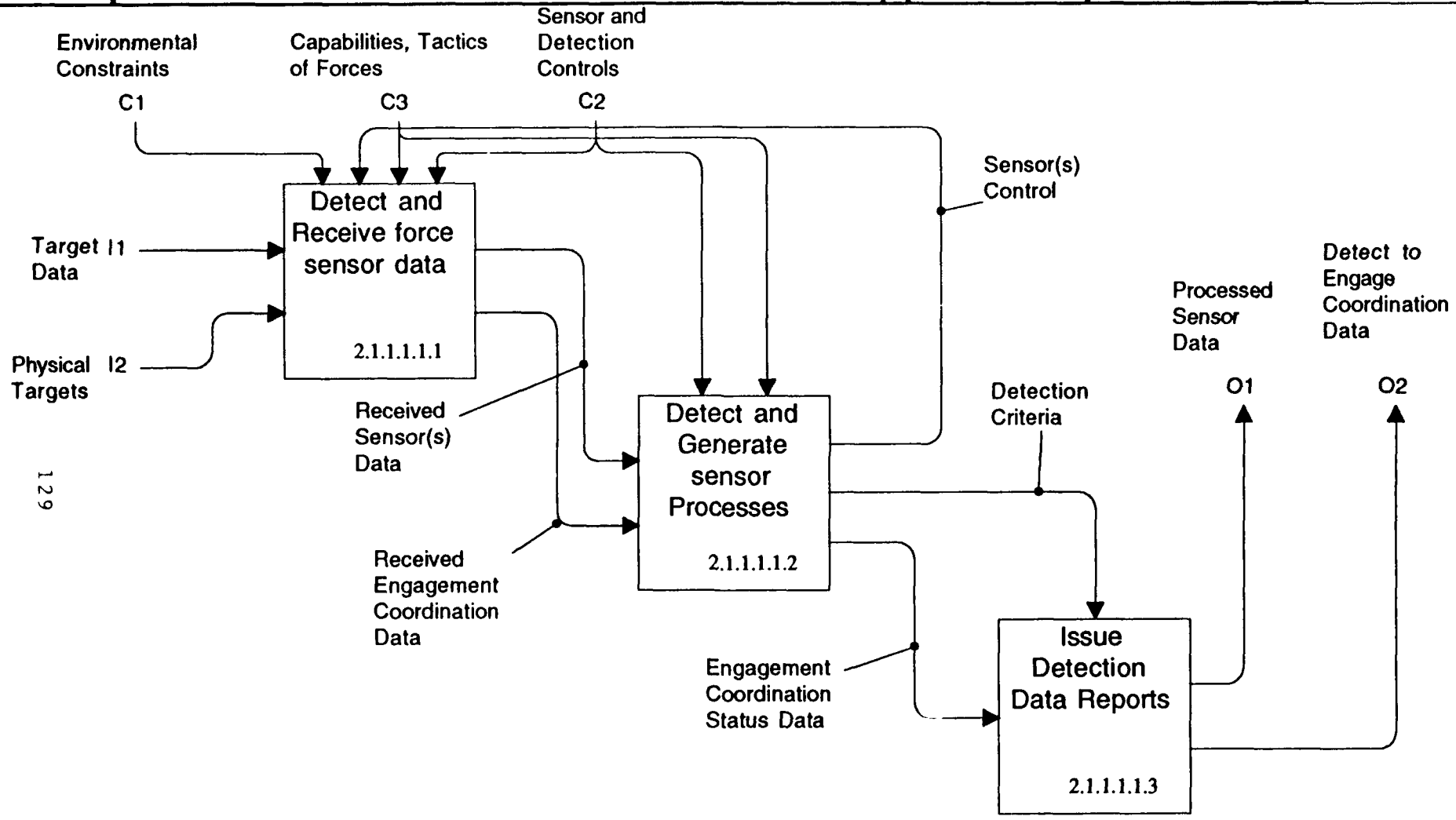

NODE: 2.1.1.1.1	TITLE: Detect and Sense	NUMBER:

USED AT: NPGS for Thesis	AUTHOR: Darren L. Turner, LT, USN PROJECT: Generic Multi-National Force Architecture NOTES: 1 2 3 4 5 6 7 8 9 10	DATE: 2/4/92 REV:	X WORKING	READER DATE	CONTEXT:
			DRAFT		
			RECOMMENDED		
			PUBLICATION		

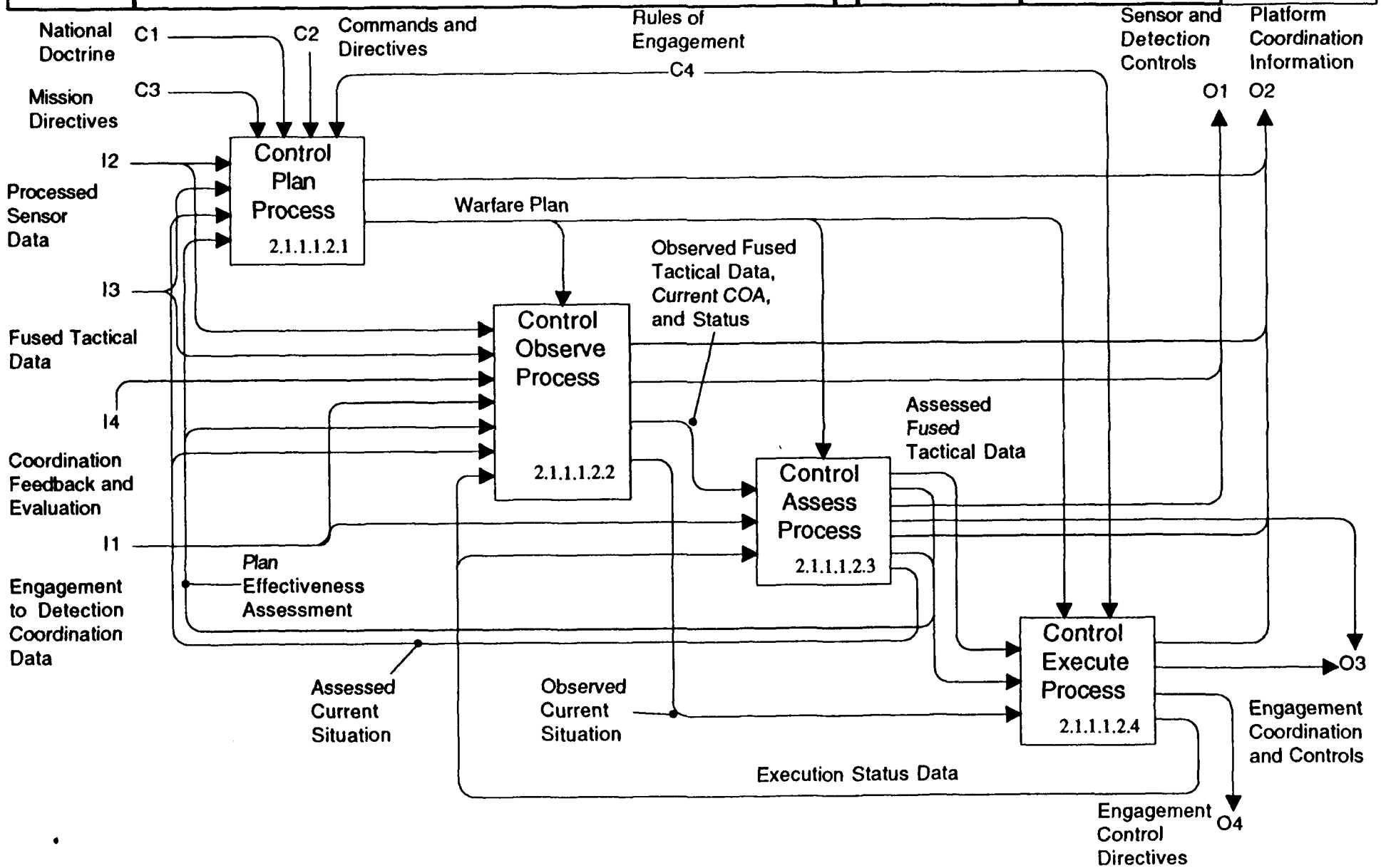

NODE: 2.1.1.1.2	TITLE: Control of Platforms	NUMBER:

USED AT:	AUTHOR: Darren L. Turner, LT, USN	DATE: 2/4/92	X	WORKING	READER	DATE	CONTEXT:
NPGS for Thesis	PROJECT: Generic Multi-National Force Architecture	REV:		DRAFT			
				RECOMMENDED			
	NOTES: 1 2 3 4 5 6 7 8 9 10			PUBLICATION			

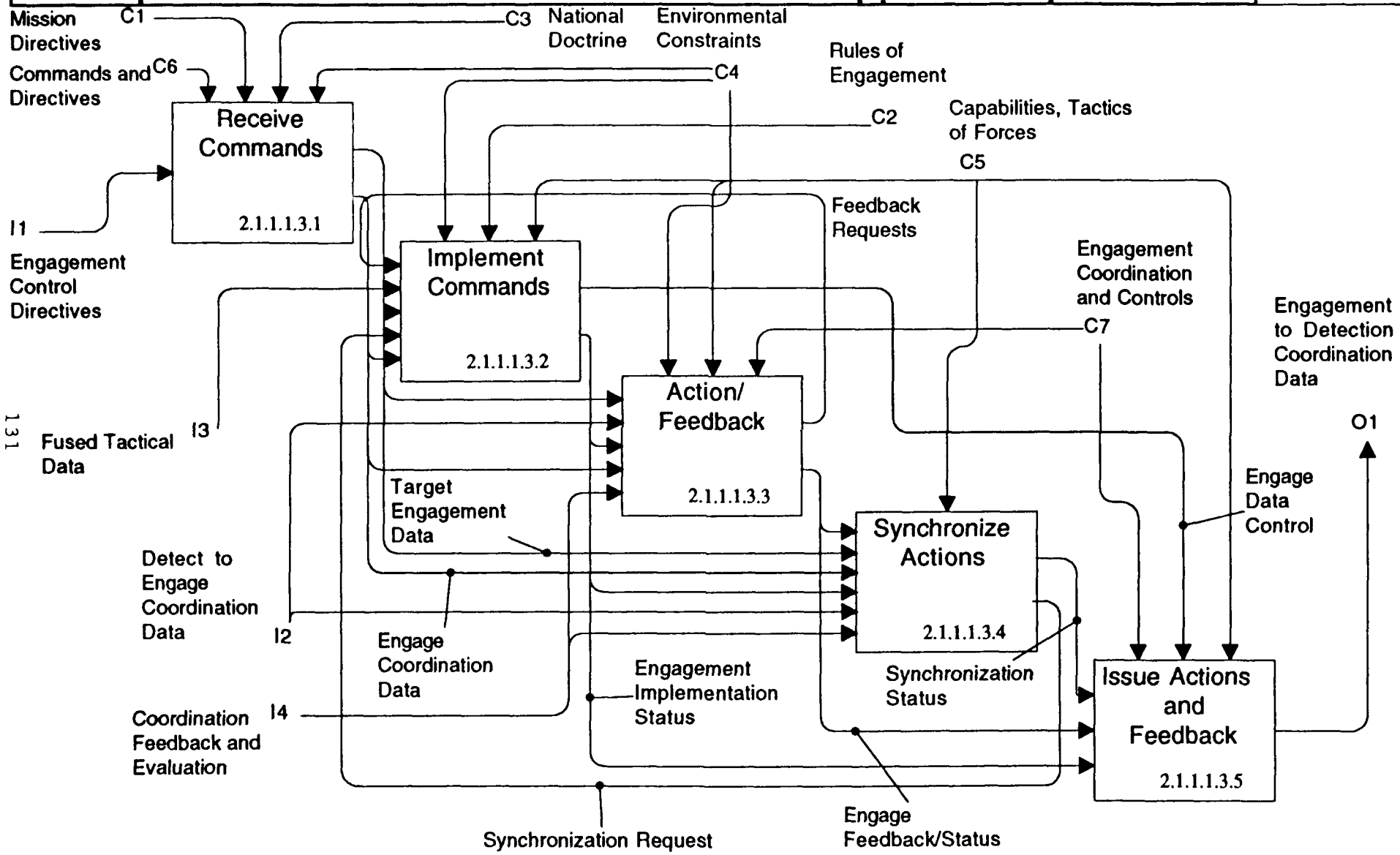

NODE: 2.1.1.1.3	TITLE: The Engagement, or Performance Act	NUMBER:

USED AT: NPGS for Thesis	AUTHOR: Darren L. Turner, LT, USN PROJECT: Generic Multi-National Force Architecture NOTES: 1 2 3 4 5 6 7 8 9 10	DATE: 2/4/92 REV:	X WORKING	READER DATE	CONTEXT:
			DRAFT		
			RECOMMENDED		
			PUBLICATION		

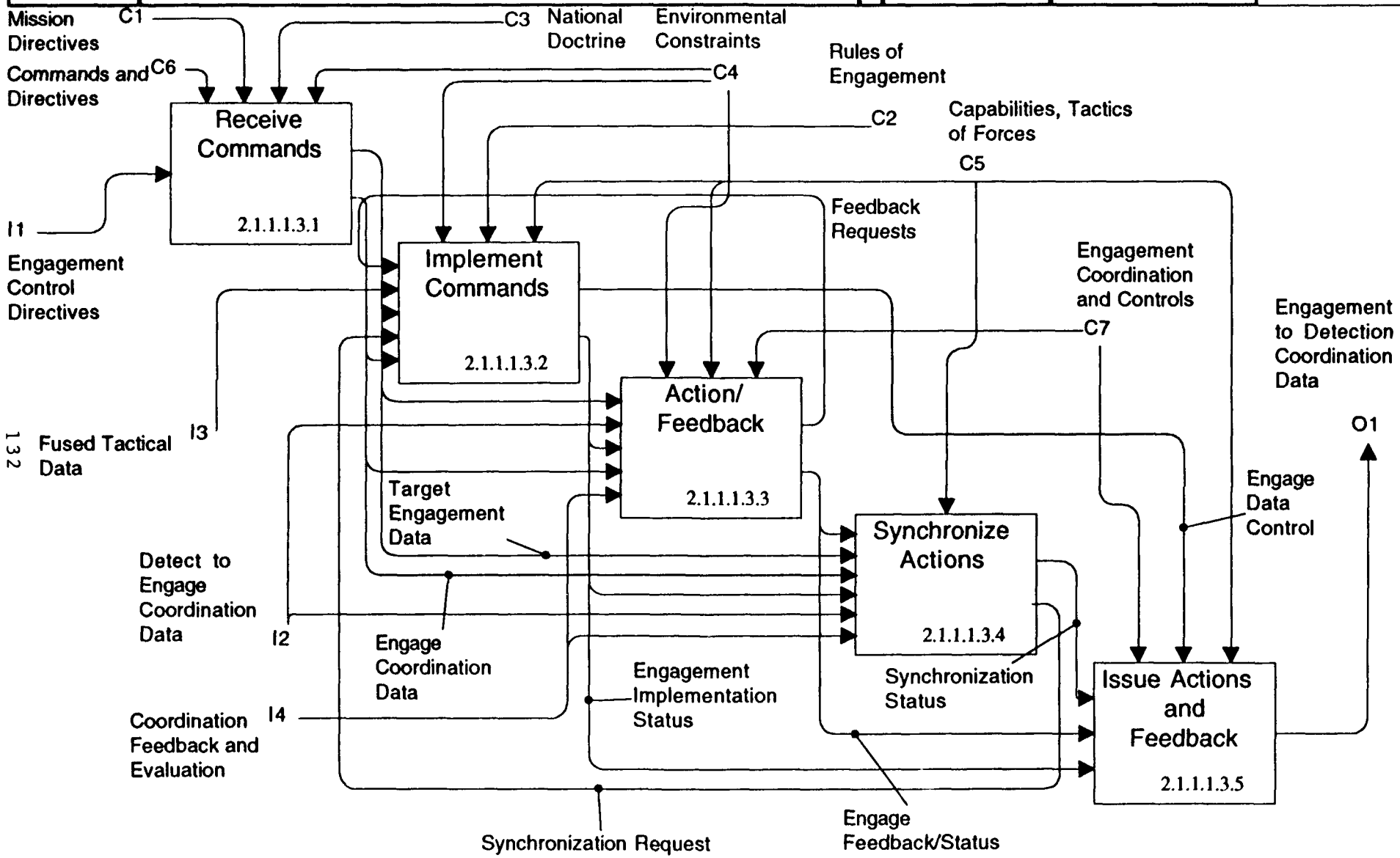

NODE: 2.1.1.1.3	TITLE: The Engagement, or Performance Act	NUMBER:

LIST OF REFERENCES

Antony, R., "A Framework for Automated Tactical Data Fusion," *Proc. 1987 Tri-Service Data Fusion Symp.*, Vol. 1, pp. 380-396, 1987.

Beam, W.R., *Command, Control, and Communications Systems Engineering*, McGraw-Hill, 1989.

Cardwell III, T.A., *Command Structure for Theater Warfare The Quest for Unity of Command*, Air University Press, September 1984.

Curtis, R.J., "A System Engineering Approach to Battle Force Architecture," SPAWAR working paper dated 01 May 1989.

Cushman, Sr., J.H., "Command and Control of Theater Forces: Issues in Mideast Coalition Command," *Program on Information Resources Policy*, Harvard University, February 1991.

Gold, D., *America, the Gulf, and Israel: CENTCOM (Central Command) and Emerging U.S. Regional Security Policies in the Middle East*, Westview Press, 1988.

Hagen, K.J., *In Peace and War*, Greenwood Press, 1984.

Hughes, W.P., *Fleet Tactics theory and practice*, Naval Institute Press, 1986.

Johnson, R., and Bhattacharyya, G., *Statistics, Principles, and Methods*, John Wiley and Sons, 1985.

Kapasouris, P., Serfaty, D., Deckert, J.C., and Wohl, J.G. of ALPHATECH, and Pattipati, K.R., of The University of Connecticut, "Mapping Missions onto C^3 Organizations," Joint ALPHATECH and University of Connecticut paper for Command and Control Research Symposium, 1989.

Simon, H.A., "The Architecture of Complexity," *Proceedings of the American Philosophical Society*, v. 106, no. 6, pp. 467-482, December 1962.

Shlaer, S., and Mellor, S.J., *Object-Oriented Systems Analysis, Modeling the World in Data*, Prentice-Hall, Inc., 1988.

Snyder, J.C., *Defending the Fringe, NATO, the Mediterranean, and the Persian Gulf*, Westview Press / Johns Hopkins Foreign Policy Institute, School of Advanced International Studies (SAIS), 1987.

Tversky, A., and Kahneman, D., *Judgement under Uncertainty: Heuristics and Biases*, Cambridge University Press, pp. 257-274, 1982.

Waltz, E.L., and Buede, D.M., "Data Fusion and Decision Support for Command and Control," *IEEE Trans. Syst., Man, Cyber.*, vol. SMC-16, no. 6, pp. 396-410, November/December 1986.

Waltz, E., and Llinas, J., *Multisensor Data Fusion*, Artech House, Inc., 1990.

"Battle Management Architecture Design Concepts," Naval Ocean Systems Center Technical Report 1436, dated August 1991.

"Navy Cooperative Engagement Architecture," Working Group Final Report for Warfare Systems Architecture and Engineering, SPAWAR 30 Division, June 1991.

"The Copernicus Architecture, Phase I: Requirements Definition," Copernicus Project Office Document, August 1991.

"Revised Master Set of Required Operational Functions," SPAWAR working paper dated 15 December 1988.

"Hierarchy of Objectives: An Approach to Command and Control Warfare Requirements," SAIC Communication Systems working paper dated 25 December 1989, for Naval Ocean Systems Cemter, San Diego, California.

BIBLIOGRAPHY

Cushman, J.H., "Command and Control of Theater Forces: The Future of Force Projection Operations," *Program on Information Resources Policy*, Harvard University, June 1991.

Edge, Robert L., "Command and Control Systems: Who are They? Who Needs Them?," *Issues in C^3I Program Management*, v.1, pp. 4-9, 1984.

Endoso, J., "Navy's Copernicus Repaves the Information Highway," *Government Computer News*, Vol. 11, No. 2, pp. 52-53, January 20, 1992.

Jordan, Bob., *Alliance, Strategy, and Navies*, ST Martins Press, 1990.

Littlebury, F., and Praeger, D., *Invisible Combat: C^3CM, A Guide for the Tactical Commander*, AFCEA International Press, 1986.

Lopez, Armando L., "A Study of the Diversity of Methodologies for the Derivation of Measures of Effectiveness and Performance," *Science of Command and Control: Coping with Uncertainty*, pp. 100-105, AFCEA International Press, 1988.

Macke, "Command, Control, Communications, Computers, and Intelligence for the Warrior," 1992.

Martin, J., and McClure,C., *Structured Techniques: The Basis for CASE*, Prentice Hall, 1988.

Sweet, Ricki., "The MCES and the Search for Generic Measures", *Science of Command and Control: Coping with Uncertainty*, pp. 106-117, AFCEA International Press, 1988.

Tow, William., *Subregional Security Cooperation in the Third World*, Lynn Reiner Publishers, 1990.

Joint Publication 1, *Joint Warfare of the US Armed Forces*, 11 November 1991.

"A Domain Analysis Process," Interim Report by Software Productivity Consortium, Herndon, Virginia, 1990.

"Options for NATO Multinational Maritime Forces (NMMFS)," Strategy and Campaign Department Report 5-91 for the Naval War College, 31 May 1991.

"Conduct of the Persian Gulf Conflict," An Interim Report to Congree, Extract Question 15.

"Space and Electronic Warfare Baseline System Specifications, Vols. I-XII," SPAWAR Division 30, 15 October 1991.

INITIAL DISTRIBUTION LIST

1.	Defense Technical Information Center Cameron Station Alexandria, Virginia 22304-6145	2
2.	Library, Code 0142 Naval Postgraduate School Monterey, California 93943-5002	2
3.	Director for Command, Control, and Communications Systems, Joint Staff Washington, DC 20318-6000	1
4.	C3 Academic Group, Code CC Naval Postgraduate School Monterey, California 93943-5000	1
5.	LT Darren L. Turner 1106 Jenniper Lane Annapolis, Maryland 21403	2
6.	James O. and Dr. Marilyn L. Turner 200 South Terrace] Wichita, Kansas 67218	1
7.	SSGT Derrick D. Turner PSC #2 Box 15648 APO San Francisco, California 96367	1
8.	Steve J. Turner 9 West Street #6 Charleston, South Carolina 29401	1