AD-A247 723

20030214266

(2)

U.S. ARMY MEDICAL RESEARCH
INSTITUTE OF CHEMICAL DEFENSE

USAMRICD-TR-91-09

INVESTIGATION OF GUINEA PIG PERFORMANCE ON AN EIGHT-LANE TREADMILL

Anita V. Finger

November 1991

DTIC
ELECTE
MAR 23 1992
S B D

Approved for public release; distribution unlimited

U. S. ARMY MEDICAL RESEARCH INSTITUTE OF CHEMICAL DEFENSE
Aberdeen Proving Ground, MD 21010-5425

92-07420

DISPOSITION INSTRUCTIONS

Destroy this report when no longer needed. Do not return to the originator.

The findings in this report are not to be construed as an official Department of the Army position unless so designated by other authorized documents.

In conducting the work described in this report, the investigators adhered to the "Guide for the Care and Use of Laboratory Animals" as promulgated by the Committee on Revision of the Guide for Laboratory Animal Facilities and Care of the Institute of Laboratory Animal Resources, National Research Council.

The use of trade names does not constitute an official endorsement or approval of the use of such commercial hardware or software. This document may not be cited for purposes of advertisement.

UNCLASSIFIED
SECURITY CLASSIFICATION OF THIS PAGE

REPORT DOCUMENTATION PAGE

Form Approved
OMB No. 0704-0188

1a. REPORT SECURITY CLASSIFICATION Unclassified	1b. RESTRICTIVE MARKINGS
2a. SECURITY CLASSIFICATION AUTHORITY	3. DISTRIBUTION/AVAILABILITY OF REPORT Approved for public release; distribution unlimited
2b. DECLASSIFICATION/DOWNGRADING SCHEDULE	
4. PERFORMING ORGANIZATION REPORT NUMBER(S) USAMRICD-TR-91-09	5. MONITORING ORGANIZATION REPORT NUMBER(S) USAMRICD-TR-91-09
6a. NAME OF PERFORMING ORGANIZATION U.S. Army Medical Research Institute of Chemical Defense 6b. OFFICE SYMBOL (If applicable) SGRD-UV-DA	7a. NAME OF MONITORING ORGANIZATION U.S. Army Medical Research Institute of Chemical Defense, SGRD-UV-RC
6c. ADDRESS (City, State, and ZIP Code) BLDG E3100 Aberdeen Proving Ground, MD 21010-5425	7b. ADDRESS (City, State, and ZIP Code) BLDG E3100 Aberdeen Proving Ground, MD 21010-5425
8a. NAME OF FUNDING/SPONSORING ORGANIZATION 8b. OFFICE SYMBOL (If applicable)	9. PROCUREMENT INSTRUMENT IDENTIFICATION NUMBER
8c. ADDRESS (City, State, and ZIP Code)	10. SOURCE OF FUNDING NUMBERS PROGRAM ELEMENT NO. 63002A PROJECT NO. 3M263002D TASK NO. 995 AA WORK UNIT ACCESSION NO.

11. TITLE (Include Security Classification)
Investigation of Guinea Pig Performance on an Eight-Lane Treadmill

12. PERSONAL AUTHOR(S)
FINGER, Anita V.

13a. TYPE OF REPORT	13b. TIME COVERED	14. DATE OF REPORT (Year, Month, Day)	15. PAGE COUNT
Final	FROM Apr 88 TO May 88	November 1991	18

16. SUPPLEMENTARY NOTATION

17. COSATI CODES			18. SUBJECT TERMS (Continue on reverse if necessary and identify by block number)
FIELD	GROUP	SUB-GROUP	Guinea Pigs, Treadmill, Exercise
06	04		

19. ABSTRACT (Continue on reverse if necessary and identify by block number)

The ability of the guinea pig to run on a treadmill for a sustained period of time was investigated as a possible exercise model. Training was conducted over a twelve-day period at speeds ranging from 0.08 mph (1.93 mpm) to 0.50 mph (11.61 mpm) and session lengths from 5 to 15 minutes. A rating scale (0 TO 5) was developed as a means to score the animals' exercise performance with a mean score of two being set as the criterion for the group. Of the twelve animals trained only two failed to reach this mean criterion over the twelve-day training period. The treadmill performance of the animals overall was encouraging with a mean score of 2.47 ± 0.96 over the 12-day training period.

20. DISTRIBUTION/AVAILABILITY OF ABSTRACT ☒ UNCLASSIFIED/UNLIMITED ☐ SAME AS RPT ☐ DTIC USERS	21. ABSTRACT SECURITY CLASSIFICATION UNCLASSIFIED
22a. NAME OF RESPONSIBLE INDIVIDUAL James A. Romano, MAJ, C, Drug Assessment	22b. TELEPHONE (Include Area Code) 410-671-4442 22c. OFFICE SYMBOL SGRD-UV-D

DD Form 1473, JUN 86 Previous editions are obsolete.

SECURITY CLASSIFICATION OF THIS PAGE
UNCLASSIFIED

Table of Contents

Tables and Figures. v

Introduction. 1

Materials and Methods 1

The Treadmill. 1
Animals. 2
Training 3

Results 4

Discussion. 5

References. 11

Distribution List 13

COPY INSPECTED 6

Accession For
NTIS GRA&I ☑
DTIC TAB ☐
Unannounced ☐
Justification
By
Distribution/
Availability Codes
Dist | Avail and/or Special
A-1

Tables and Figures

Table 1	Speed Settings vs Actual Speed With and Without Animals on Treadmill.	2
Table 2	Guinea Pig Performance Scale.	3
Table 3	Treadmill Settings for Training	4
Table 4	Animals' Daily Rating	5
Table 5	Scale Rating.	6
Figure 1	Omni-Pacer Treadmill.	8
Figure 2	Average Rating on Animals for Entire Study. . . .	9
Figure 3	Average Daily Group Rating Through Study.	9

Introduction:

Acute and chronic exercise methods for guinea pigs were needed for integration into the screening process for candidate compounds. Physical exercise, both acute and chronic, has an effect on behavioral responses by rats after exposure to the carbamates pyridostigmine and physostigmine [1]. Evidence suggests that, in rats, exercise affects not only drug sensitivity [1,2,5] but also performance on certain operant tasks [5]. McLeod et al [6] noted that exercise on healthy human males affected the hemodynamic and metabolic actions of propranolol, atenolol and prazosin.

Because soldiers are required to maintain a high level of physical conditioning, similar requirements when testing pretreatment and therapy compounds should reflect this conditioned state. The guinea pig model is currently being utilized to study the effects of pretreatment and therapy compounds and candidate compounds to counter chemical warfare (CW) agents.

The standard guinea pig exercise model is the swim test devised by Rylands [3]. This test has proven unsatisfactory for two reasons: a fairly large number of animals fail to complete the test and only a single animal can be tested at a time. Alternatively, the accelerating rotorod test had been proposed to evaluate the physical capacity of guinea pigs. Although this task allows the training and testing of four animals per session, the abbreviated exercise area disallows the animal's full range of motion. The treadmill, however, has the advantage of allowing the experimenter to train and test eight animals at a time and the capacity for changing the slope of the platform, thus allowing the level of exertion to be increased or decreased. The additional space provided by the treadmill lane compared to the space provided with a rotorod gives the animals freedom of movement away from the shock grid without being directly in front of it.

Materials and Methods

The Treadmill

The treadmill used was an eight-lane Omni-Pacer treadmill (Omnitech Inc., Columbus, OH), measuring 40 inches wide by 33 inches in length (101.6 cm X 83.8 cm), with the running lanes measuring 4 inches wide by 23 inches long (10.2 cm X 58.4 cm). The lane area was enclosed in white opaque Plexiglas with a clear hinged Plexiglas lid covering each lane. At the rear of each lane was a six tine foot shock grid which requires at least 100 gm of weight to activate the shock mechanism. The electrical current to the grid was adjustable from 0.1 mA to 3.0 mA. The level of shock used was enough to startle the animals but not enough to cause physical harm. An escape door measuring 4 inches by 4 inches was

located to the rear of each lane. Air vents, two per lane, were located 1 inch in front of the shock grid. Each vent, which released a puff of air, alerted the animals that they were near the shock grid. For this study the air vents were not connected to an air source. An ambu bag was utilized for manual air warnings. The lane and shock unit were mounted on a steel frame. Also mounted on the frame were two 2-inch rollers which moved the belt (40 inches wide) over the running platform (39 inches wide by 23 inches long) (Figure 1).

The speed of the treadmill was controlled by one of two controls, both with settings ranging between 1 to 10. The control located beneath the treadmill's belt and attached to the frame was the main control, which was always maintained on a setting of 10. The second speed control was located on the separate shock control box. The dial adjustment determined the speed of the belt in meters per minute (MPM) which was read from an LED display above the control. There were differences noted between the speed setting and the belt speed, depending on whether animals were running or not running on the treadmill (Tables 1 and 2).

TABLE 1

Speed Control Setting vs Actual Treadmill Speed With and Without Animals on the Treadmill.

Speed Setting	Without Animals MPM (mph)	With Animals MPM (mph)
1.5	2.26 (0.10)	1.93 (0.08)
2.0	4.97 (0.21)	4.60 (0.20)
2.3	5.81 (0.25)	
2.5	7.59 (0.33)	7.21 (0.31)
3.0	10.17 (0.44)	9.73 (0.42)
3.2	11.62 (0.50)	
3.4		11.62 (0.50)
3.5	12.82 (0.55)	

Animals:

Twelve male naive guinea pigs (Cavia porcellus) with an average beginning weight of 303.08 gm were pair-housed in suspended cages in accordance with "The Guide for the Care and Use of Laboratory Animals" and local SOPs under controlled temperature and humidity conditions (70.0 ± 2 °F and 43 ± 5% respectively) with a 12-hour light/dark cycle, with the lights on at 0600. Animals were maintained on certified guinea pig ration 35-564 (Zeigler Bros.,

Inc., Gardners, PA) and water ad lib. Each animal was distinctly marked by three methods upon arrival: an ear punch, a numbered color ear tag, a permanent colored ink on hairs along the spine.

Daily weights were taken and each animal was observed for illness or injury three times per day: each morning when animals were removed from their home cage, immediately after removal from the treadmill, and at least one hour after they were returned to their home cage.

Training

Training was conducted in two phases over a fourteen-day period. A novel rating scale (0 - 5) was developed to rate the animals' performance on this treadmill (Table 2). Each animal was required to meet at least two criteria in order to receive the specified rating with the exception of FAIL. Animals that met either of the failure conditions received a "0".

TABLE 2

PERFORMANCE ASSESSMENT SCALE
TREADMILL PERFORMANCE:

0- FAIL-	Animal received > 10 shocks or froze on shock grid requiring removal from the treadmill.
1- POOR-	Shocked < 10 times but > 5 times per session. Required constant air reinforcement. Rode treadmill lane constantly through session.
2- FAIR-	Shocked < 5 times but > 2 times per session. Required air reinforcement ≤ 3 times per minute. Rode treadmill lane < 50 % of session time.
3- GOOD-	Shocked < 2 times per session. Air reinforcement required < once per minute. Rode treadmill lane < 25 % of session.
4- VERY-GOOD	No shocks first 10 minutes of session but ≤ one shock per session. Air reinforcement required < 3 times per session. Kept moving throughout session.

Phase I Training: Animals were allowed to investigate the stationary treadmill lane for 15 minutes with a shock setting of 2.4 mA. If the animals stepped on the grid and were shocked prior to the end of the session, they were removed from the treadmill and placed in the transport cage. Animals which had not received a shock after the second 15 minute session were placed on a different lane and allowed to continue to investigate the new lane. All animals experienced being shocked at least once during the two days of Phase I.

Phase II Training: At the beginning of the 12 days of Phase II training, the speed control was adjusted until the treadmill began to move and maintain a smooth motion (0.08 mph, 1.93 mpm). On this day the animals remained on the treadmill an average of five minutes. On the remaining days of training the treadmill speed and/or the session time were increased until the animals were running at 0.50 mph (11.62 mpm) (see Table 3). The shock setting was set at 2.4 mA.

The criterion for successful performance was a score of "2" or greater (Figure 2). Increases in treadmill speed and session length did not allow the animals time to become exercise conditioned and thus receive a higher score.

TABLE 3
Treadmill Settings for Phase II Training

Day of Training	Speed MPH	Speed MPM	Time min	Shock mA	Delay to full speed
1	0.08	1.93	5	2.4	0
2	0.19	4.40	7.45	2.4	20 sec
3	0.20	4.60	10.0	2.4	20 sec
4	0.31	7.21	10.0	2.4	40 sec
5	0.31	7.21	10.0	2.4	40 sec
6	0.42	9.73	10.0	2.46	50 sec
7	0.42	9.73	10.0	2.46	40 sec
8	0.49	11.47	15.0	2.46	50 sec
9	0.50	11.61	15.0	2.46	60 sec
10	0.50	11.61	15.0	2.46	60 sec
11	0.50	11.61	15.0	2.46	60 sec
12	0.50	11.61	15.0	2.46	60 sec

RESULTS

During the 14 days of training all animals gained weight with an average total gain of 110.67 g ± 15.47 g. No signs of illness

(diarrhea, vomiting, piloerection, lethargy) were observed at any time until day eight, at which time animals exhibited evidence of rhinorrhea. The rhinorrhea may have been caused by the stress of the exercise. One hour after removal from the treadmill no discharge from any animal was observed. This condition on day eight coincides to a slight decrement in group performance (Table 4). The incidence of rhinorrhea corresponds to an increase in session length from 10 to 15 minutes and a rise in treadmill speed from 0.42 mph (9.73 mpm) to 0.49 mph (11.47 mpm) on day eight and then to 0.50 mph (11.61 mpm) on day nine (Table 3).

All animals audibly vocalized when first placed on the treadmill and again during the last few minutes of most training sessions. There were no observable injuries from either the electric shock or any aspect of the treadmill exercise.

Only on the first day of Phase II training was the mean group rating less than "2" (Figure 3). Of the two animals that failed to reach a Phase II average of "2" or greater (Table 4), animal # 12 reached criterion only five days of training, with a 12-day average of 1.33 ± 0.18. Animal # 5 failed to reach criterion only three of the 12 days, but ended with a 12-day average of 1.92 ± 0.25. All other animals had a 12-day rating ranging between 2.25 ± 0.21 and 3.08 ± 0.28, with a mean of 2.57 ± 0.25 (n = 10).

As can be seen in Table 5, of 144 measurements, 43.75 % of the scores given were a rating of "2" and 29.17 % of the measurements received a score of "3".

Coefficient of Variation (CV) allows for a general comparison of sensitivity [7,8]. It is defined as

$$CV = [(S.D./\mu)100]$$

where S.D. is the standard deviation divided by the mean and multiplied by 100 for a percent. Buelke-Sam et al, notes that very low CVs denote behaviors that are disrupted only under life threatening conditions, while very high CVs would require very large sample sizes to detect treatment-related changes. Moderate CVs (18 - 40 %) may indicate that the behavioral test measures a response which is relatively susceptible to toxic insults. Utilizing the results of Table 4, the average CVs across animals is 34.45 ± 1.86 and across days 33.90 ± 2.82. Both values are within the moderate limits of CVs. This could indicate that the treadmill exercise criteria would make a positive contribution in drug assessment.

DISCUSSION

This study has clearly demonstrated that the treadmill task can be successfully used as an exercise model in the guinea pig. The capacity of this test model is increased at least two fold over other commonly used exercise models, a significant attribute in a

drug screening program. We have shown that the guinea pig can be trained to run on a treadmill to a speed of at least 0.50 mph (11.62 mpm) for 15 minutes. Those animals that failed to reach the criterion set and the low total scores of the other animals may have been due to the pace in which both the session length and the treadmill speed were increased.

TABLE 4

Animals' Daily Rating Scores During Phase II Training

	ANIMAL #											
DAY	1	2	3	4	5	6	7	8	9	10	11	12
1	1	1	2	1	0	1	2	2	2	2	1	1
2	3	3	2	2	2	2	2	2	2	2	2	2
3	4	3	3	2	2	4	2	3	2	2	3	2
4	2	3	4	3	2	4	2	3	3	4	2	1
5	2	2	3	3	2	2	3	3	3	3	3	2
6	3	2	4	4	2	4	2	3	3	3	3	2
7	2	3	4	2	2	3	4	5	2	2	1	2
8	2	2	2	1	3	2	3	5	4	4	2	1
9	2	2	2	2	1	2	1	3	4	3	2	1
10	2	2	2	3	3	4	2	3	2	3	2	1
11	3	3	2	2	3	4	2	2	4	3	4	1
12	2	3	3	4	1	2	2	3	5	3	3	0

A: Animals' Mean Score Over Twelve Training Days of Phase II

	1	2	3	4	5	6	7	8	9	10	11	12
μ	2.33	2.42	2.75	2.42	1.92	2.83	2.25	3.08	3.00	2.83	2.42	1.33
σ	0.75	0.64	0.83	0.95	0.36	1.07	0.72	0.95	1.00	0.69	0.86	0.62
SE	0.22	0.18	0.24	0.28	0.25	0.31	0.21	0.28	0.29	0.20	0.25	0.18

B: Daily Mean Score Over Twelve Training Days of Phase II

	1	2	3	4	5	6	7	8	9	10	11	12
μ	1.33	2.16	2.67	2.83	2.58	2.92	2.67	2.58	2.08	2.42	2.75	2.58
σ	0.62	0.37	0.75	0.90	0.49	0.76	1.11	1.19	0.86	0.76	0.92	1.26
SE	0.18	0.11	0.22	0.26	0.14	0.22	0.32	0.34	0.25	0.22	0.27	0.36

TABLE 5

Scale Rating

	0	1	2	3	4	5
No.	2	16	63	42	18	3
Percent	1.39	11.11	43.75	29.17	12.50	2.08

Future studies should examine longer exercise sessions and speeds exceeding those used in this study while slowing the rate of increase in both session length and treadmill speed. Along these lines, perhaps, the training schedule for rats described by McMaster et al. [2] can be modified to conform to guinea pigs. This would allow a greater understanding of the species behavioral capacities.

Once the limits of this model are identified, investigation of the effects of exercise on a behavioral task currently utilizing guinea pigs, such as the step-up avoidance task, may be warranted. Once parameters are established, the treadmill can enhance design flexibility to current and future behavioral task which use a guinea pig model. Exercise conditioning can function as either a dependent or independent variable. By utilizing the rating scale used here, performance on the treadmill itself can be evaluated following various pharmacological manipulations. An exercise requirement can be combined with a drug treatment, and its combined effects compared to that observed in the absence of exercise in many behavioral paradigms.

Figure 1
Omni-Pacer Treadmill

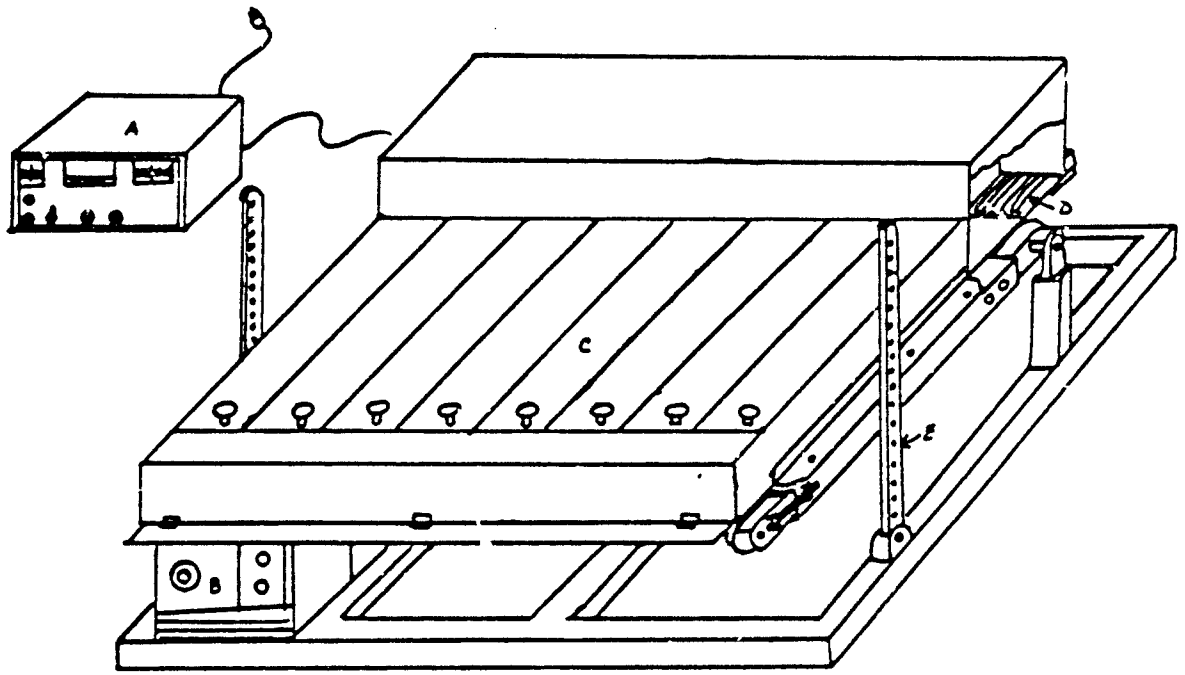

A schematic representation of the Omni-Pacer 8-lane Treadmill: A - shock and speed control; B - power and speed control; C - treadmill lane; D - shock grid; E - slope adjustment.

Figure 2
Mean Scale Rating by Animal

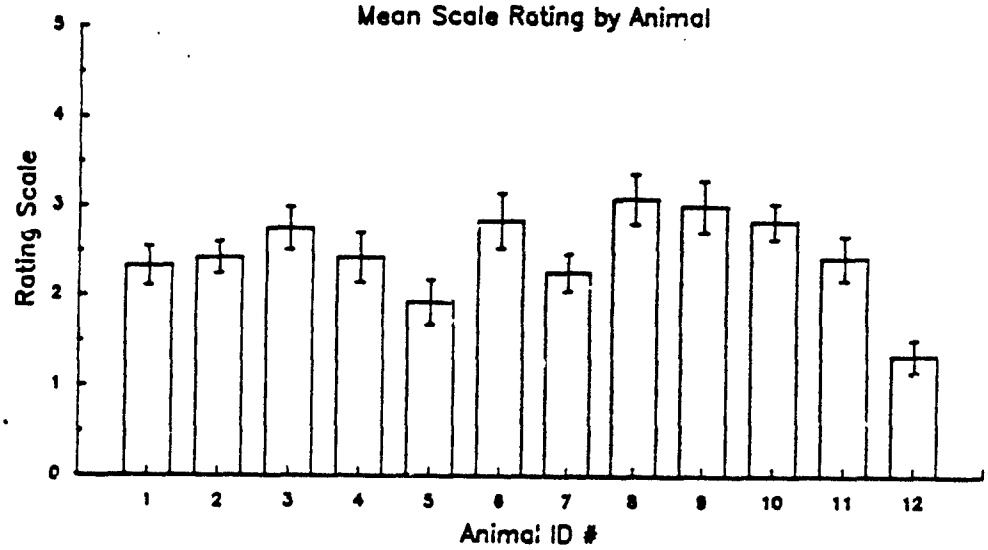

Individual animal mean score over the 12 days of Phase II training. Only animals 5 and 12 failed to reach a mean rating score of 2.

Figure 3
Mean Scale Rating by Day

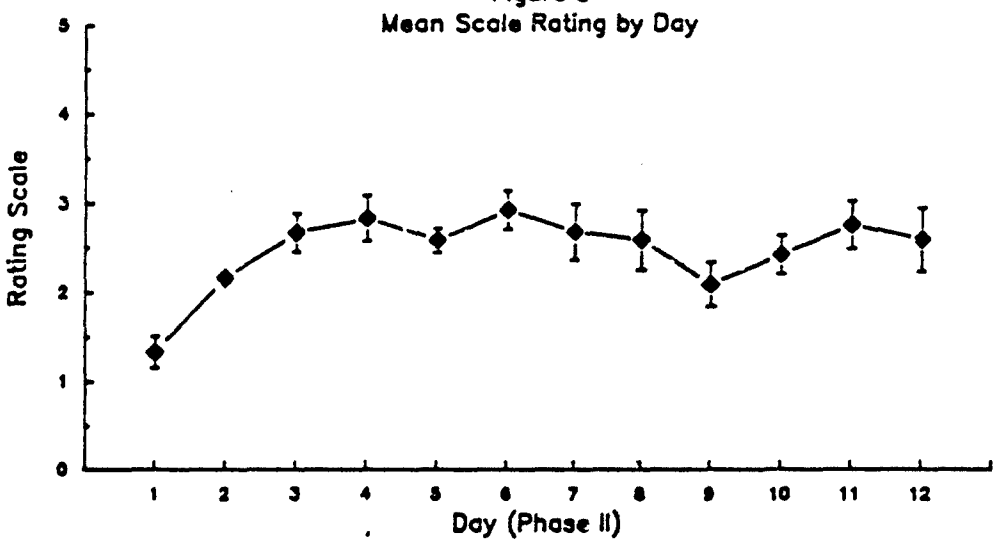

Mean group scores over the 12 days of Phase II training. Only on day one was the group score below 2 on the rating scale.

REFERENCES

1. **McMaster, S.B.**, A.V. Finger (1989) Effects of Exercise on Behavioral Sensitivity to Carbamate Cholinesterase Inhibitors. Pharmacology, Biochemistry and Behavior, 33, 811-813.

2. **McMaster, S.B.**, J.M. Carney (1985) Changes in Drug Sensitivity Following Acute and Chronic Exercise. Pharmacology, Biochemistry and Behavior, 23, 191-194.

3. **Rylands, J.M.**, (1982) A Swimming test for Assessing Effects of Drugs Upon Motor Performance in the Guinea-Pig (Cavia porcellus). Neuropharmacology, 21, 1181-1185.

4. **McMaster, S.B.**, J.M. Carney, (1985) Exercise-Induced Changes in Scheduled Controlled Behavior. Physiology and Behavior, 35, 337-341.

5. **McMaster, S.B.**, J.M. Carney, (1986) Chronic Exercise Produces Tolerance to Muscarinic Antagonist in Rats. Pharmacology, Biochemistry and Behavior, 24, 865-868.

6. **McLeod, A.A.**, J.E. Brown, B.B. Kitchell, F.A. Sedor, C. Kuhn, D.G. Shand, R.S. Williams (1984) Hemodynamic and metabolic Responses to Exercise After Adrenoceptor Blockade in Humans. Journal of Applied Physiology, 56(3), 716-722.

7. **Buelke-Sam, J.**, C.A. Kimmel, J. Adams, C.J. Nelson, C.V. Vorhees, D.C. Wright, V. St. Omer, B.A. Korol, R.E. Butcher, M.A. Geyer, J.F. Holson, C.L. Kutscher, M.J. Wayner (1985) Collaborative Behavioral Teratology Study: Results. Neurobehavioral Toxocology and Teratology, 7(6), 591-624.

8. **Vorhees, C.V.**, (1985) Comparison of the Collaborative Behavioral Teratology Study and Cincinnati Behavioral Teratology Test Batteries. Neurobehavioral Toxocology and Teratology, 7(6), 625-633.

Distribution List

Addresses	Copies
Defense Technical Information Center ATTN: DTIC-DDAC Cameron Station, Bldg 5 Alexandria, VA 22304-6145	2
Commander US Army Medical Research and Development Command Fort Detrick, MD 21702-5012	2
HQDA(DASG-HCD) Washington, DC 20310	1
Director Walter Reed Army Institute of Research Bldg 40 Washington, DC 20307-5100	1
Commander Letterman Army Institute of Research Bldg 1110 Presidio of San Francisco, CA 94129-6800	1
Commander US Army Aeromedical Research Laboratory ATTN: Scientific Information Center P.O. Box 577 Fort Rucker, AL 36362-5000	1
Commander US Army Biomedical Research and Development Laboratory Bldg 568 Fort Detrick, MD 21702-5010	1
US Army Medical Research Institute of Infectious Disease Bldg 1425 Fort Detrick, MD 21702-5011	
Commander US Army Research Institute of Environmental Medicine Bldg 42 Natick, MA 01760-5007	1

Addresses	Copies
Commandant US Army Chemical School ATTN: ATZN-CM-C Fort McClellan, AL 36205	1
Director Armed Forces Medical Intelligence Center Fort Detrick, MD 21702-5004	1
Commander US Army Institute of Dental Research Bldg 40 Washington, DC 20307-5300	1
Commander US Army Institute of Surgical Research Bldg 2653 Fort Sam Houston, TX 78234-6200	1
Commandant Academy of Health Sciences US Army ATTN: HSHA-CDC Fort Sam Houston, TX 78234-6100	1
Commandant Academy of Health Sciences US Army ATTN: HSHA-CDM Fort Sam Houston, TX 782346100	1
Dr. Joseph Osterman Director, Environmental and Life Sciences Office of the Deputy Under Secretary of Defense (Rsch & Adv Technology) Room 3D129 Washington, DC 20301-2300	1
Commander US Army Training and Doctrine Command ATTN: ATMD Fort Monroe, VA 23651	1

Commander 1
US Army Nuclear and Chemical Agency
7500 Backlick Road
Bldg 2073
Springfield, VA 22150-3198

Biological Science Division 1
Office of Naval Research
Arlington, VA 22217

Executive Officer 1
Naval Medical Research Institute
Naval Medicine Command
National Capital Region
Bethesda, MD 20814

USAF Armstrong Laboratory/CFTO 1
Sustained Operations Branch
Brooks AFB, TX 78235-5000

Department of Health and Human Services 1
National Institutes of Health
The National Library of Medicine
Serial Records Section
8600 Rockville Pike
Bethesda, MD 20894

Stemson Library 1
Academy of Health Sciences
Bldg 2840, Rm 106
Fort Sam Houston, TX 78234-6100

US Army Research Office 1
ATTN: Chemical and Biological
Sciences Division
P.O. Box 12211
Research Triangle Park, NC 27709-2211

AFOSR/NL 1
Bldg 410, Rm A217
Bolling AFB, DC 20332

Commander 1
US Army Chemical Research,
Development & Engineering Center
ATTN: SMCCR-MIS
Aberdeen Proving Ground, MD 21010-5423

LTC Don W. Korte, Jr. 1
Battelle Memorial Institute, JM-3
505 King Avenue
Columbus, OH 43201-2695

Commander 26
US Army Medical Research
Institute of Chemical Defense
ATTN: SGRD-UV-ZA
SGRD-UV-ZB
SGRD-UV-ZS
SGRD-UV-RC (5 copies)
SGRD-UV-R (13 copies)
SGRD-UV-AI-W
SGRD-UV-D
SGRD-UV-P
SGRD-UV-V
SGRD-UV-Y
Aberdeen Proving Ground, MD 21010-5425