N00123-89-G-0580

AD-A245 685

FUNDAMENTAL MECHANISMS AFFECTING FRICTION WELDING UNDER VACUUM

By

Benedicta Renee Jacoby

B.S. Engineering
University of California, Berkeley (1985)

DTIC
ELECTE
JAN 24 1992
S B D

DISTRIBUTION STATEMENT A
Approved for public release;
Distribution Unlimited

Submitted to the department of
OCEAN ENGINEERING
In Partial Fulfillment of the Requirements
For the Degrees of

MASTER OF SCIENCE IN NAVAL ARCHITECTURE AND MARINE ENGINEERING

and

MASTER OF SCIENCE IN MECHANICAL ENGINEERING

at the

MASSACHUSETTS INSTITUTE OF TECHNOLOGY
June, 1991

© Benedicta Renee Jacoby, 1991

The author hereby grants to M.I.T. permission to reproduce and to distribute copies of this thesis document in whole or in part.

Signature of Author Benedicta Renee Jacoby
Department of Ocean Engineering, May 1991

Certified by Koichi Masubuchi
Professor Koichi Masubuchi
Ocean Engineering Dept., Thesis Supervisor

Certified by Ernest Rabinowicz
Professor Ernest Rabinowicz
Mechanical Engineering Dept., Thesis Reader

Accepted by A. Douglas Carmichael
A. Douglas Carmichael, Chairman
Departmental Graduate Committee
Department of Ocean Engineering

92-01535

92 1 16 119

FUNDAMENTAL MECHANISMS AFFECTING FRICTION WELDING UNDER VACUUM

by

Benedicta Renee Jacoby

Submitted to the department of Ocean Engineering
on 10 May 1991 in partial fulfillment of the
requirements for the degrees of S.M. Naval Architecture
and Marine Engineering and S.M. Mechanical Engineering.

ABSTRACT

Inertia welding of 2024-T3 aluminum alloy studs to 2024-T3 plate is investigated at atmospheric pressure and under vacuum to determine the effects of vacuum, surface contamination, material, weld force and weld speed on the integrity of the weld. The vacuum conditions are limited to 10 torr or less due to experimental apparatus. The fundamental parameters involved in inertia friction welding are investigated here to lead to the development of a mathematical model for their affects in on-orbit welding in the construction of a space station. A bend test is used to determine a sufficient weld.

The special conditions required for on orbit welding are discussed along with a survey of current welding methods and there feasibility and limitations for space station construction. Friction welding, as one of only a few joining techniques that is showing promise for all areas of concern for construction in space : minimal power consumption, ease of automation, minimal operator skill and lack of toxic by products, is discussed in detail prior to the experimental presentation.

Thesis Supervisor: Dr. Koichi Masubuchi

Title: Professor of Material Science and Ocean Engineering

Accession For
NTIS GRA&I ☑
DTIC TAB ☐
Unannounced ☐
Justification
By per form 50
Distribution/
Availability Codes
Dist | Avail and/or Special
A-1

ACKNOWLEDGEMENTS

I would like to express my sincere gratitude to the following people:

Dr. Koichi Masubuchi for his support in this effort and enthusiasm in space station construction.

Mr. Ravikumar Nagabushanam for his assistance with equipment and knowledge of the "system".

Mrs. Carolyn Russel of the Marshall Space Flight Center for her assistance in obtaining suitable materials for testing and her genuine interest.

Lt. Michael Smith for his interest and his willingness to explore new ideas.

My office mates, Dave Klipp and Ralph Soule, for their curiosity, humor and stimulating conversation.

My family and friends, for their continuing support, confidence and inspiration.

Lastly, I thank the United States Navy and the Engineering Duty Officer community for giving me the opportunity and financial support to complete my studies here at M.I.T.

Accession For
NTIS GRA&I
DTIC TAB
Unannounced
Justification
By
Distribution/
Availability Codes
Dist | Avail and/or Special

TABLE OF CONTENTS

Page

Abstract....2

Table of Contents....4

List of Figures....7

List of Tables....8

INTRODUCTION....9

CHAPTER ONE: Background for Space Joining Techniques....13

1.1 Introduction....13

1.2 Survey of Current Welding Procedures....14

1.2.1 Common problems with On-Orbit Welding

1.2.2 Joining Techniques that Minimize Intrusion

1.2.3 Nondestructive Testing

1.2.4 Limitations and Feasibility of Candidates

1.3 Appealing Characteristics of Friction Welding....20

1.3.1 Range of Past Studies

1.3.2 Major Parameter Effects on Weld Quality

1.3.3 Robotic Applicability

1.3.4 Restrictions of Friction Welding

1.3.5 Future Development for Space Applications

Page

CHAPTER TWO: General Discussion of Friction Welding.....25

2.1 Types of Friction Welding.....25

2.1.1 Inertia Friction Welding

2.2 Current Welding Applications for On-Orbit Construction.....30

2.3 Theoretical Affects on Friction.....30

2.3.1 Material Properties

2.3.2 Frictional Coefficients

2.3.3 External Factors

CHAPTER THREE: Experimental Apparatus and Procedure.....35

3.1 Apparatus.....35

3.1.1 Vacuum Chamber Parameters

3.1.2 Experimental Variables

3.1.3 Experimental Constants

3.1.4 Materials Studied

3.2 Testing Weld Quality.....40

3.3 Experimental Procedure.....41

CHAPTER FOUR: Experimental Results.....43

CHAPTER FIVE: Discussion of Results.....50.

5.1 Parameter Combinations Yielding Preferred Welds.....50

5.2 Variational Explanations.....54

5.3 Experimental Failings.....58

Page

CHAPTER SIX: Conclusions and Recommendations.....59

6.1 Conclusions.....59

6.2 Recommendations.....59

REFERENCES.....61

APPENDIX A Energy Calculations for Aluminum.....63

APPENDIX B Electric Motor Failure Analysis.....65

LIST OF FIGURES

Page

1. Current Design of Space Station Freedom....10

1-1. Typical Friction Welding Joint Designs....21

1-2. Uses of Friction Welding in Space....24

2-1. Effect of Welding Variables at Joint Interface....29

2-2. Metal Weldability Chart....31

3-1. Experimental Apparatus Schematic....36

3-2. Motor and Flywheel Configuration....38

5-1. Preferred Welding Conditions....51

5-2. Satisfactory Welding Conditions....53

5-3. Unacceptable Welding Conditions....57

LIST OF TABLES

Page

2-1 Minimum Power/Velocity for Materials....27

4-1 Atmospheric Testing...Various Alloy Combinations....44

4-2 Atmospheric Testing...2024-T3...22k RPM....45

4-3 Atmospheric Testing...2024-T3...19k RPM....46

4-4 Atmospheric Testing...2024-T3...13k RPM....46

4-5 Testing at 100 Torr...2024-T3...19k RPM....47

4-6 Testing at 100 Torr...2024-T3...13k RPM....48

4-7 Testing at 50 Torr...2024-T3...19k RPM....48

4-8 Testing at 50 Torr...2024-T3...13k RPM....49

4-9 Testing at 10 Torr...2024-T3...19k RPM....49

4-10 Testing at 10 Torr...2024-T3...13k RPM....49

5-1 Characteristics of 2219-T81 and 2024-T3 Aluminum Alloys....52

5-2 Conditions yielding Weak Welds....56

B-1 Brush Grades for High Altitude and Space....66

INTRODUCTION

In the ongoing design and logistical planning for the space station Freedom, figure 1, the decision of how to join the pieces of the structure and when those parts should be connected has a significant influence. The purpose of the space station is to establish a permanent satellite servicing center, continue space experimentation and set up rendezvous points for deep space exploration. To meet these goals, the space station Freedom will be established in low earth orbit. Freedom could also become a base for assembly and maintenance of larger space structures increasing the need for large scale automated joining systems. The current controversy over how to proceed with the space station and severe budget restrictions demand that more joining be done in space than was originally planned. Although the space station is designed for construction by telerobotic systems and extravehicular crew, the crew exposure needs to be minimized for safety considerations.

Current design of the space station has most welding being completed on earth prior to launch with only mechanical fastening being accomplished on-orbit. Launch of prefabricated structures presents difficulties due to terrestrial structural considerations that must be observed and volume limitations of the launch vehicles. The more primary joining that is done on earth leads to increased volume and structural restriction for launch. The more joining that is done on-orbit requires advancement of current welding and joining techniques to take full advantage of the microgravity and vacuum conditions of space.

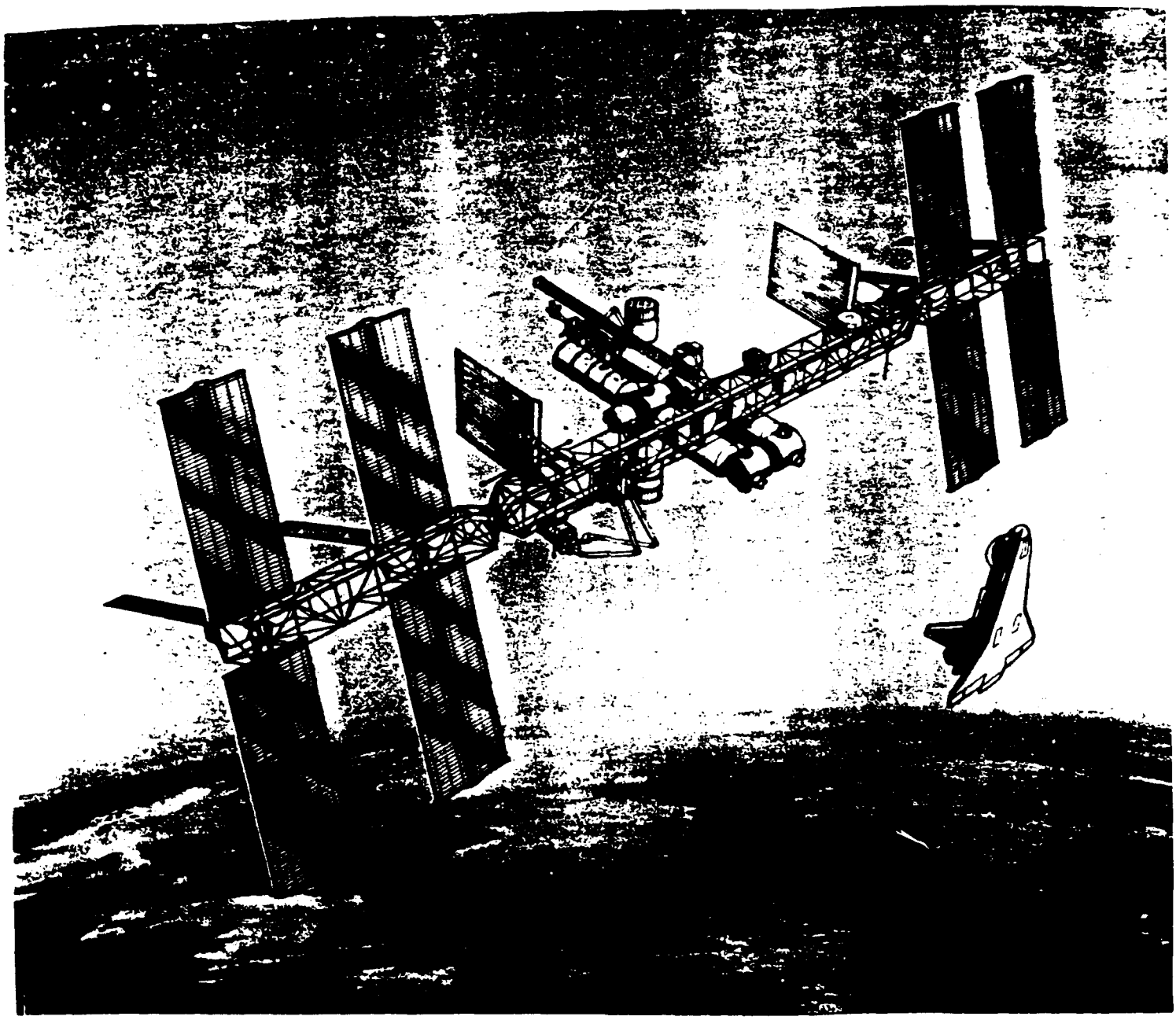

Figure 1. Current Design of Space Station Freedom

Even with most construction completed on earth, at a minimum minor repairs will certainly become necessary during the life of the space station. Joining considerations therefore range from minor interior and exterior repairs to major structural construction. The methods that may be used need to be thoroughly understood prior to launch.

As on earth, no one joining technique will satisfy all of the construction requirements on-orbit. The effects of atmosphere, microgravity, vacuum and robotic adaptability all influence the choice of the joining technique for a specific application. Joining method also depends on the hardware configuration of the joint (access to both sides) and material. In an effort to identify which joining methods are best suited for space station construction and repair, investigations into several different types of joining have been conducted. The major considerations for an acceptable joining method are minimal power requirements, adaptability to automation and minimal user skill although other requirements will be discussed briefly in this study. Each joining technique requires some way of nondestructive evaluation of the joint, therefore applicable testing procedures are also under investigation.

Electron beam welding has been tested by the National Aeronautics and Space Administration (NASA) aboard Skylab and by the USSR aboard SOLUZ 6 and 12. A hand held electron beam welder has been developed by both countries and the Soviet version was used successfully aboard SOLUZ 12 for repairs [9]. Studies of laser, plasma arc, electron beam and friction welding under vacuum are ongoing for applications to the space station. Gas metal arc welding is quickly becoming an unfavorable choice due to

difficulty in creating and controlling an arc in the vacuum exterior to the station and the environmental contamination problems inside the station. NASA is currently pursuing investigations into joining methods which can be fully automated to limit the need for crew expertise in joining, EVA time and to increase the reliability and repeatability of the welds with limited nondestructive test requirements.

This study will attempt to add to the basic understanding of inertia friction welding under vacuum as a step toward modelling and then developing an automated system for on-orbit repairs and construction.

CHAPTER ONE

Background for Space Joining Techniques

1.1 Introduction

Current welding procedures, while adequately understood for terrestrial joining of partial structures in the construction of the space station, present unique difficulties when adapted to the environment both inside and outside of the station on-orbit. Ignoring the complications from launching the partial station components, constructing the space station on earth requires adherence to safety factors demanded by the terrestrial gravitational field. This relinquishes the possible benefits of space construction in reducing weight and necessary support structure. However, without further development of expert systems, joining partial structures on earth offers more variations in design due to the types of welding procedures and the skilled joiners available available.

Joining of the space station on-orbit, whether major construction or repairs, presents certain difficulties which must be overcome or avoided with the type of method chosen. Exterior to the station, some types of welding can cause contamination to sensitive surfaces or electromagnetic interference to operating systems. Exterior joining must be accomplished in a vacuum of approximately 10^{-7} torr, microgravity and temperatures ranging from +250 to -250 degrees fahrenheit. Interior joining must not contaminate the life support environment with toxic fumes or oxygen replacement. This chapter will present a survey of current welding techniques, the unique problems each

presents to on-orbit welding, the potential use for each in the future of the space station and a more detailed examination of friction welding as one option for specific application in on-orbit joining.

1.2 Survey of Current Welding Techniques

Although this survey will cover many of the significant types of welding widely in use today, it is by no means comprehensive. Instead it is used to point out the variety and extent of the difficulties in on-orbit welding and the means by which some of those problems can be overcome and by which some joining techniques are virtually eliminated from on-orbit construction in, at least, the near future. The joining groups that are covered are in arc, solid state, electron beam, resistance, laser welding, thermochemical brazing and adhesive bonding [3,6,12,14].

Arc welding. Arc welding includes gas metal arc (GMAW), plasma arc (PAW), gas tungsten arc (GTAW) and stud welding (SW). The first three present similar challenges so only one, GTAW, will be discussed in any detail. GTAW is a medium speed, high quality weld process. Inert gas is used as a conduit for the arc and to protect the weld from oxidation. This process is normally used for square butt joints of thickness less than 0.1" or j-groove joint greater than 0.1" thick with filler metal. GTAW requires an arc of 20 - 250 amps and 5 - 15 volts from the electrode to the material to be welded for normal applications. SW is normally considered an intermediate assembly step in a joining process. The arc, required for less than two seconds, melts the end of the stud and the base material before it is extinguished and the stud is driven into the work piece. Again the arc requires a conductive medium which is usually an inert gas such as argon.

Solid state. Among the methods of solid state welding, explosion (EW), ultrasonic (UW) and diffusion (DFW) are discussed here. EW occurs by plastic flow at the mating surfaces of two work pieces. A high energy shock wave from the explosion causes metallic bonding by atom to atom contact in the plastic deformation. This process is used mainly for flat plate. UW uses electrical energy converted to mechanical energy by magnetostrictive or electrostrictive transducers. Vibration energy and clamping force lead to atomic bonding of the materials in contact. This method is normally used on lap joints. Although UW can be used on a diverse selection of materials such as aluminum to stainless steel or to ceramics with the same strength as aluminum to aluminum bonds, access to both sides of the joint is required. The thickness of the work pieces is generally limited to less than 0.065 inches. DFW uses the simultaneous application of heat and pressure to two metal surfaces causing plastic flow of both surfaces. This method is used primarily for flat plates but can also be used for shrink fitting tube to sleeve joints.

Electron beam welding (EBW). EBW uses electrons generated by a heated tungsten filament that is magnetically focused and accelerated through a vacuum tube. The kinetic energy of the electrons is transferred to the work piece upon collision. In normal operation EBW is automatic or semi-automatic at high speeds of up to 190 cm/min, for thin material, and with a highly focused beam. For a manual, hand held mode of operation, the beam must be defocused somewhat resulting in a lower depth to width aspect ratio and increased heat affected zone size. EBW requires high vacuum of approximately 10^{-4} to 10^{-6} torr for operation. EBW is used for butt joints.

Resistance welding (RW). RW uses thermal energy generated by resistance to conductance of electrical energy to form fusion or diffusion bonds. A high current ranging from 30 kA for aluminum to 10 kA for stainless steel of 0.6 inch thickness. A clamping force must be applied to both sides of the joint or from one side with the other supported by a rigid support. The pressure from the clamping force is used to expel contaminants and prevent shrinkage cavities. A very short energy pulse time is required. This method is restricted to lap joints only. RW can be used too weld metal to matrix composites.

Laser welding (LW). LW is an alternative to EBW. LW uses a tightly focused beam of electromagnetic energy as a heat source. It is normally operated in an automatic mode due to speed and tolerance requirements. Fiber optic bundles are used to direct the beam and relatively low power is needed for the operation.

Thermochemical brazing (TB). TB uses exothermic reactants to provide heat to melt braze filler metal and cause it to wet and bond the mating surfaces. The reactants are normally a metal oxide and some active metal reductant. The reaction ignites the metal by a resistance wire. The reactants are separated from the metal by a plate. Cleanliness is critical for this procedure.

Adhesive bonding (AB). AB uses different adhesives, cured over varying periods of time, to join many types of dissimilar materials. Liberal fit up tolerances are allowed between work pieces. Long curing cycles for some joints can require a large amount of continuous energy of up to 40 - 50 kJ/in of joint length.

1.2.1 Common Problems with On-Orbit Welding. For the construction and/or repair of the space station, several key factors are involved in the selection of joining techniques. The space station will have a limited source of continuous power which must serve all of the purposes of the station. Dedicated power for welding is not an option at this point. Therefore, any type of joining used must minimize the power required in its adaptation to operation in space. The restrictions of any payload for launch to, or containment on the space station apply also to the types of welding equipment used in orbit. The chosen methods must minimize weight and volume in order to be feasible. The environment exterior to the station presents challenges of microgravity, high vacuum and extreme temperature ranges. All joining equipment must be able to operate under these conditions as well as the joints they produce being acceptable and inspectable. Exterior joining techniques must also limit the amount of material and electromagnetic contamination they produce to reduce harmful effects on the body and operation of the station. Joining within the habitat of the module must be safe for human exposure, so toxic products, oxygen depleting reactions and dangerous electrical and mechanical energy releases must be minimized. The equipment necessary to continually provide an uncontaminated environment in the presence of such joining methods could be extremely costly in size, weight and energy.

1.2.2 Joining Techniques that Minimize Intrusion. Of the types of joining methods discussed, each presents certain barriers to use on the space station. The methods which present the least difficulties to operation in a vacuum are electron beam, diffusion, laser, ultrasonic, resistance and friction, which will be covered later. Arc

welding processes are the most severely restricted by high vacuum since arc control is difficult and excessive amounts of inert gas would be necessary. Thermochemical brazing has only been successful in a vacuum with boron and vanadium pentoxide. Outgassing of plastisizers caused by vacuum with adhesive bonding could easily damage thermal control surfaces and optical equipment. Temperature extremes are most severely restrictive for adhesive bonding. Microgravity has the least effect on solid state processes since they do not require molten metal formation in their method. Contamination, both exterior and interior, is a large problem for arc welding where inert gases replace oxygen inside and spatter can damage surface and cloud optical devices. Interior contamination is also a problem for explosive welding and thermochemical brazing. Electron beam and laser welding appear to produce the least contaminates along with friction welding. A high degree of operator skill is needed for all manual arc welding except stud. Thermochemical brazing must be pre-engineered with no room for operator adjustments. Of the powered systems, laser, friction and electron beam offer the least power consumptive methods. Explosive and thermochemical obviously require little energy but adhesive bonding does require energy for curing.

1.2.3 Nondestructive Testing (NDT). Nondestructive testing of joints on-orbit presents its own difficulties. In an effort to minimize EVA time, NDT that could be remotely accomplished would be ideal. This requires additional equipment and power requirements. The most appealing situation would be joining techniques which are so reliable and repeatable that testing is only required for the most critical system joints. In order to accomplish the levels of confidence needed to significantly reduce joint testing,

automated joining systems need to be established for exterior construction and repair at a minimum. Interior joining represents less of a challenge to NDT but automated systems, once developed for the exterior should be adaptable to the inside.

For critical systems where nondestructive testing is unavoidable, significant advancements are being made in the area of remote computer imaging of joints and flaw detection [17]. This is good where visual tests are acceptable and the joint can be viewed for inspection. However, most other traditional methods of NDT are not applicable for exterior inspection due to vacuum or contamination and interior due to microgravity. Penetration, radiography and magnetic testing all depend on visual results and therefore may be adaptable to remote recognition of defects. Therefore, NDT must also be advanced in new methods suitable to the on-orbit environment as well as in automation.

1.2.4 Limitations and Feasibility of Candidates. In addition to the intrusive features of each joining method, the type of joint for which they are used limits their use for space station construction. The types of joining which are limited normally to lap joints are ultrasonic and resistance. Diffusion bonding, while not limited to, is most useful for butt welds. Explosive welding is normally limited to flat plates and requires access to both sides of the work pieces. Geometry of joints limits the adaptability of any method to automation but some joining techniques are inherently more easily automated than others. Electron beam, laser, friction and arc welding are already highly automated commercially. Power available on the space station has been estimated to be less than 75 kw. Joining techniques which have high power requirements nearly eliminate themselves from consideration such as adhesive bonding curing and GTAW in a vacuum.

Bulky, heavy equipment like that needed for diffusion bonding or gas supply for arc welding in a vacuum is also not acceptable. For multiple types of joining, methods that meet the requirements for low power, small weight to weld energy ratios, ability to automate and minimal intrusion are laser, electron beam and friction welding. Electron beam is available in hand held size but the high energy ratio is lost and a skilled operator is needed.

1.3 Appealing Characteristics of Friction Welding

Although the details of friction welding are extensively covered in the next chapter, a short explanation of why friction welding is a good choice for one type of joining to be used on-orbit is given here. Friction welding can be used in attaching studs, bolts, tubes etc. as long as at least one work piece is flat in the region of the joint,figure 1-1 [20,21]. Flat plate butt welds and lap joints among others are, unfortunately, not producible by this method. FW is easily automated, requires low operator skill level and low power, produces no harmful by products and shows no detrimental effects in high vacuum or microgravity. For a given material combination, weld quality is highly repeatable since it is determined by the energy of the system which is preset. A small system can be easily developed but the forces necessary for a variety of materials make hand held use unlikely in microgravity.

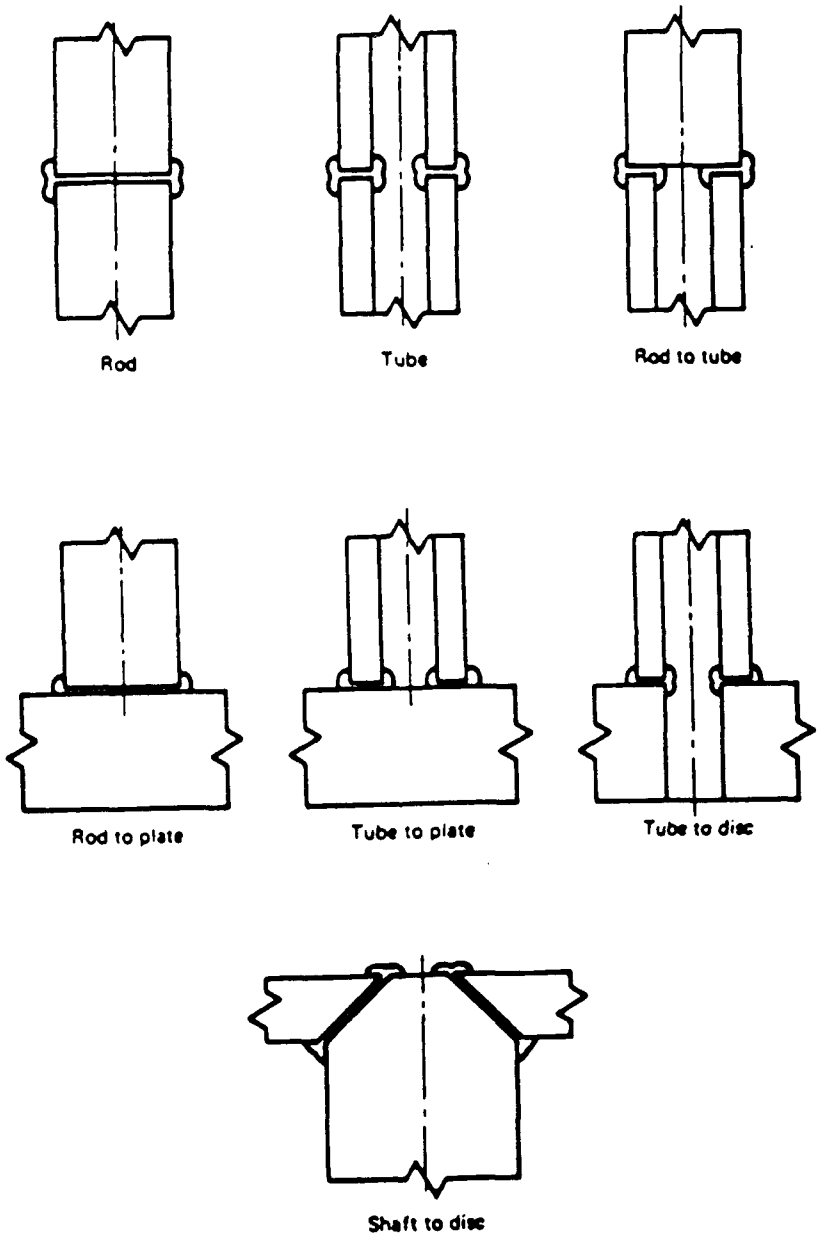

Figure 1-1. Typical Friction Weld Joint Design [26]

1.3.1 Range of Past Studies. Inertia friction welding has been studied at M.I.T. under low vacuum (>0.05 torr) by Guza [26]. That study of aluminum alloy studs to plates revealed no detrimental effect on weld quality by vacuum. Further investigation at M.I.T by Smith [2] suggests that removing the oxide layer from aluminum in a vacuum actually improves the weld with less energy used. Experiments by also reveal no ill effect on weld quality from microgravity.

1.3.2 Major Parameter Effects on Weld Quality. In friction welding, the most significant parameter for energy usage and weld quality is the type of material used. For a particular material, the weld force and pressure are the most important factors. Joint preparation, cleanliness and shape have an important if somewhat smaller affect [26]. Shape is not critical as long as one member is relatively flat. Heat studies on weld quality have not been conducted.

1.3.3 Robotic Applicability. Friction welding in commercial use today has been highly automated with robotic machinery. The technology of supervised systems for friction welding already existing eliminates some of the uncertainty from adapting such a system to unsupervised space applications. Automation is only economical for procedures which require repeated use for regular geometries. Industry has thus far not been enticed to develop specialized tools for welding. To make robotics completely useful for on-orbit construction, considerable advancements must be made in manipulator arm accuracy. Currently the shuttle's arm only has accuracy to within 5 cm, not good enough for electron beam welding.

1.3.4 Restrictions of Friction Welding. Friction welding requires at least one of the work pieces to be rotated at high speed and the pieces are forced together. This means that only welds where one piece is flat and one is symmetric to the rotation can be completed. Tube or rod to plate or tube can be accomplished but lap or butt joints are out of the question as are fillets.

1.3.5 Future Development for Space Applications. Friction welding has most recently been studied under vacuum but with the work pieces exposed to the atmosphere for a period of time. Also the vacuum tests were limited to less than 0.05 torr due to the electrical system used at M.I.T. Plans are underway to set up a pneumatic system to test at higher vacuums and to develop a robotic system where a contaminants can be cleaned from a work piece while it is already under vacuum. These tests will reveal the real weld quality which can be expected in space as well as advance toward an expert system for on-orbit application. No extreme temperature variation experiments have been conducted or are planned for at this time. Temperature variations are not expected to have a significant effect on weld quality but experimental confirmation would be helpful in creating a comprehensive model. Possible uses for friction welding in space are shown in figure 1-2 [26].

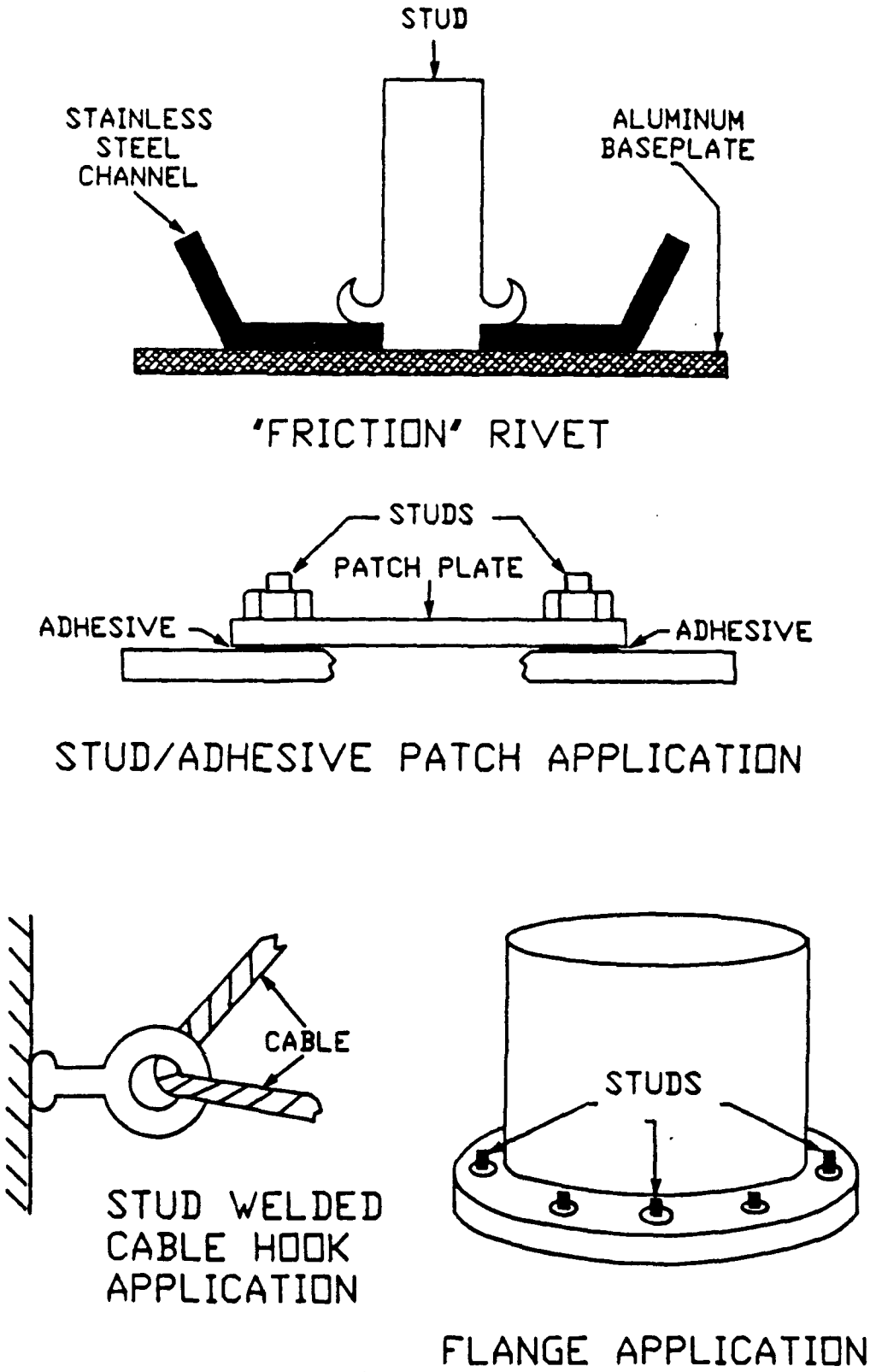

Figure 1-2. Uses of Friction Welding in Space

CHAPTER TWO

General Discussion of Friction Welding

2.1 Types of Friction Welding

In the experimental verification of the effects of some fundamental mechanisms of friction on friction welding for this thesis an inertia friction welding set up was used. Friction welding is divided into two energy classification; stored and continuous drive. There is also a class for hybrid systems combining the two. This is a brief discussion before explaining the basic principles of friction effecting all of them. Only rotational relative motion will be discussed since it is the most common and useful for space station applications. Rotational relative motion has one or both mating surfaces rotated relative to and in contact with each other. For the friction welding process, regardless of the type, one or both of the work pieces are rotated at a specific speed and then thrust together by an external force.

Continuous drive friction welding requires energy input over a specified period of time by a constant source. The rotation is stopped after a predetermined amount of time when the joint zone is in a plastic state. Pressure, forcing the surfaces together is maintained or increased to complete the weld. Continuous system are most frequently used in the U.S.S.R. and Europe [21].

Stored energy friction welding uses a flywheel rotated to a specific speed to store all of the energy used in welding a joint. The flywheel is disengaged from the power

source while simultaneously, the work pieces are thrust together. Stored energy systems are most common in the United States [21].

Heat under power is a hybrid system where the continuous drive system is used to heat the joint area and a fly wheel attached to the rotating piece supplies stored energy for the actual welding process.

2.1.1 Inertia Friction Welding. Inertia friction welding, or flywheel friction welding, is a stored energy method. A flywheel of specific inertia is accelerated to a predetermined rotational speed to achieve the amount of stored energy necessary to weld some specific materials. All the energy to achieve the weld is actually stored in the flywheel while external force is applied to hold the mating surfaces together during the joining. Once the predetermined welding speed is achieved, the flywheel is decoupled from the driving source and the thrusting force is applied to the work pieces. The braking of the rotation at the interface causes the inertial energy to be converted to heat.

The rotational velocity used is determined by the type of material to be welded. Each type of material or combination, if it is a weldable match, requires a specific energy and interface velocity for a good weld. Minimum interface velocity for various materials are tabulated for reference. Higher interface velocities can be used as thrust force is increased. The power required to achieve an acceptable weld, Q, is directly related to the thermal conductivity k, the density p, the specific heat c, and the melting point T_{mp}, of the material to be welded. The relationship suggested by A.D.Little [21] is used for the experimentation used in this thesis for welding a single material. For dissimilar materials, the properties of the material with a higher melting temperature are used.

$$Q = T_{mp}\sqrt{(k_Q c)} \tag{1}$$

The power Q, is also a direct measure of the torque times velocity. This is the power which will produce localized, shallow plastic deformation zone. The torque produced at the interface at braking must not exceed that amount which would cause excessive depth of deformation. The excessive torque will create shear stresses beyond that fraction of the material's yield strength where the adiabatic conditions needed for the weld cannot occur. The geometry of the work pieces also has an influence over the necessary minimum interface velocity; tubes require higher minimum speed than rods. Table 2-1 gives some standard minimum velocities and power for welding similar materials.

Table 2-1. Minimum Power/Velocity for Materials

Material	Power, W	Speed, m/sec
Stainless steel	260	1.00
Aluminum	380	1.25
Tool steel	430	1.40
Titanium	800	3.75

The system parameters for inertia friction welding that dictate the amount of power required for the weld are the system inertia, angular velocity and the thrusting force applied. The material properties of the work pieces also influence the required power to a great extent but for a given material the system parameters are the variables that can influence the size, torque and force of, in particular, a handheld or remote welder.

The relative velocity between the work pieces must be at least the minimum as discussed above or a poor weld is formed. Lower velocities cause higher torques than the yield strength of the materials can support. For dissimilar materials, such as aluminum to stainless steel, using the lowest relative velocity possible minimizes the formation of brittle intermetallic compounds increasing the weld strength and ductility. Although higher velocities reduce torque, axial pressure and regional heating must be reduced to avoid over heating. Materials that are prone to hardening are aided by additional heat slowing the cooling process thus reducing cracking. The combination of increased velocity and external heating must be weighed according to the type of material being welded.

The thrust force controls the temperature gradient in the weld zone and is related to the relative velocity. The force keeps the surfaces together and prevents atmospheric contamination in the weld zone. Increasing the axial force flattens the heat pattern in the weld zone allowing higher relative velocity with out overheating. The amount of force is therefore governed by the relative velocity, materials and the geometry of the wok pieces.

The system inertia is governed by the size and shape of the flywheel. A given set of materials require a certain amount of energy to achieve a sufficient weld. The flywheel stores the weld energy as it rotates. The size of the flywheel determines the size of the system and the types of material combinations which can be welded according to the speeds which can be achieved with the power source. Figure 2-1 shows the affect of energy, force and rotational velocity on the weld interface [26].

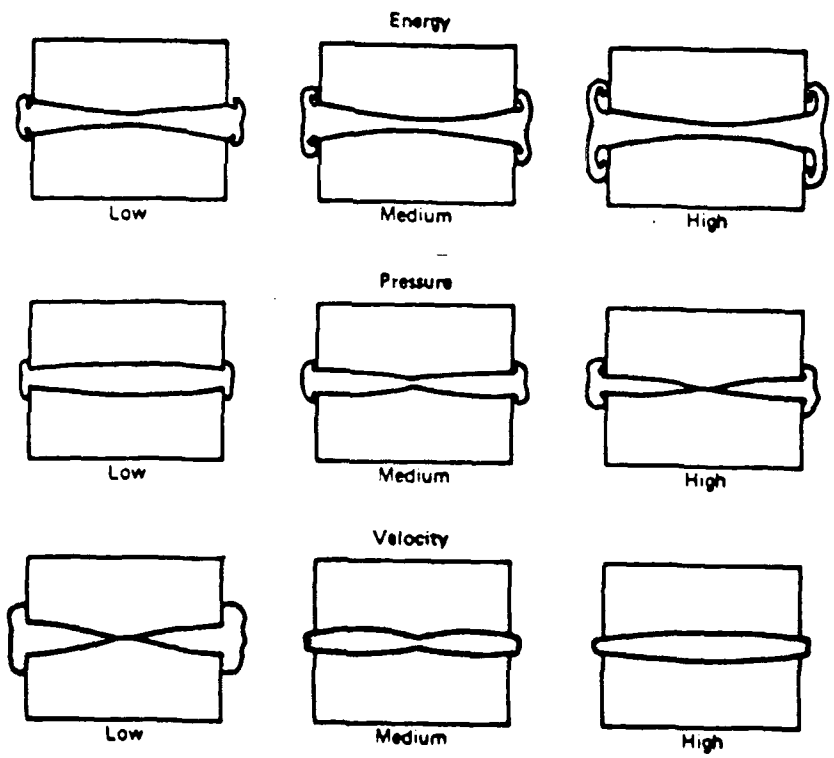

Figure 2-1. Effect of Welding Variables at Joint interface.

2.2 Current Applications for On-Orbit Construction

The space station Freedom has under gone several design revisions since its initial conception. As a result of recent studies, it may be reduced in size but it is likely that it will retain some of the same basic construction techniques. As currently planned, the station will be partially constructed on earth and carried into orbit by shuttle. The parts will have to be joined either by mechanical fastening, welding or adhesives. Once the station is operating, there will undoubtedly be breeches in the outer skin due to space debris or astronaut mishap that require patching. In addition to outside repairs, living on the station for extended periods of time will reveal restructuring for comfort or more practical working arrangements. For all of these types of work, friction welding offers solutions. In the case of bolted structures designed on earth and launched into orbit, if the pieces need to be realigned for joining on the site bolts can be cut off and new bolts placed and friction welded to complete the joining. For tears in the skin, a flange like patch can be fitted over the hole and studs welded to the surface holding the patch in place. Inside or outside the station, studs can be friction welded to surfaces to attach insulation material, be used as hangers or reattach fixtures that need to be moved to enhance the work areas.

2.3 Theoretical Effects on Friction

Up to this point friction welding has been discussed in rather broad terms of macroscopic effects and applications. Now a discussion of the fundamental principles governing friction and the mechanisms through which friction welding is achieved is

presented. The theories behind the mechanisms are supported by experimentation, however, where in some cases theories seem to be in contradiction but adequately describe the observed phenomenon an effort is made to distinguish which theory the author believes is dominant.

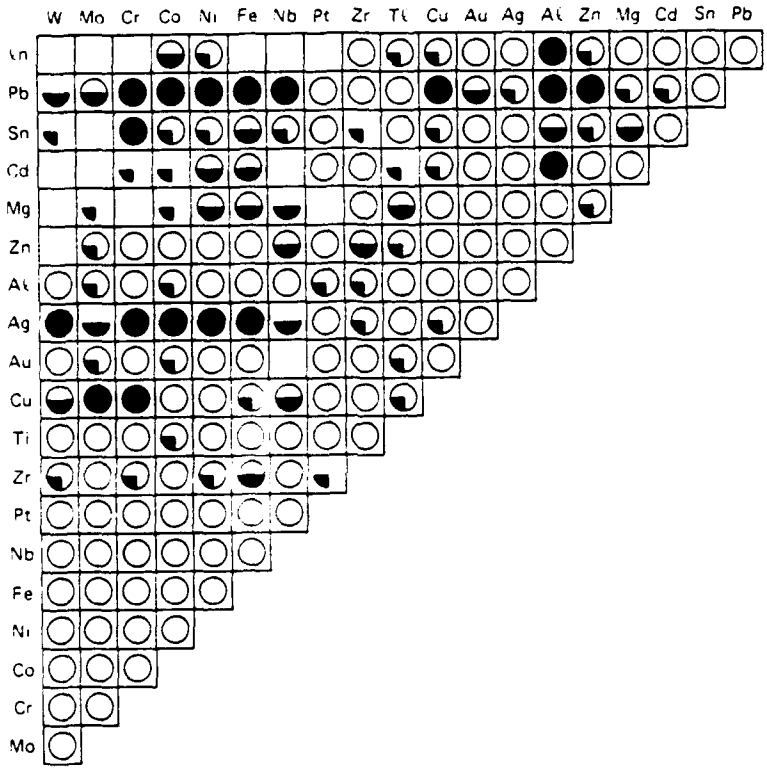

Rabinowicz's compatibility chart for various metal combinations derived from binary diagrams of the respective elements in terms of preferred antifriction surfaces. ●, Two liquid phases, solid solution less than 0.1% solubility (lowest adhesion); ◒, two liquid phases, solid solution greater than 0.1%, or one liquid phase, solid solution less than 0.1% solubility (next lowest adhesion); ◔, one liquid phase, solid solution between 0.1 and 1% solubility (higher adhesion); ○, one liquid phase, solid solution over 1% (higher adhesion). Blank boxes indicate insufficient information. (From Rabinowicz, 1971.)

Figure 2-2. Metal Weldability Chart [19]

2.3.1 Material Property Affects on Friction. The frictional force between two surfaces in relative motion to each other is directly related to the real area of contact at the interface. The apparent area of interface is not a factor. The surface interactions of the real area which determine the frictional force are divided into surface and volume properties of the materials involved. Volume properties include yield strength, penetration hardness, Young's modulus, shear modulus, brittleness and thermal properties in sliding. The first two volume properties are plastic while Young's and shear modulus are elastic characteristics of a material. Surface properties include chemical reactivity,surface energy, absorption and interfacial energy [1]. These properties plus the combination of materials to be welded determine the weldability of a joint under a given set of circumstances. Figure 2-2 shows the general weldability of metal combinations based on experimental results based on material properties.

As was stated previously, in friction welding the shear stress at the interface can only be a fraction of the yield strength of a material at a given temperature. The penetration hardness of a material is approximately one third of the yield strength for most materials. Hardness also happens to be the parameter which is most representative of mechanical strength under sliding and so has a great deal to do with the final weld strength for friction welding. The thermal properties, at high sliding speed, of a material dictate whether external heat can or needs to be applied to a joint that is being welded influencing the amount of energy required for a given joint.

The surface properties of chemical reactivity and the tendency of a material to

absorb molecules from the environment are very important in welding aluminum in particular. If a material, like aluminum, absorbs surface contaminants such as grease, surface interaction is decreased therefore increasing the energy needed to weld a joint in the presence of such a film. Aluminum also tends to react with oxygen on its surface creating an aluminum oxide layer that is substantially harder than the substrate. Chemical reactivity is the tendency of a material to form a surface layer, like an oxide, different than the substrate. The surface energy or the work needed to create a fresh surface on a material increases greatly when a harder oxide layer has been formed. This makes welding more difficult, requiring additional energy to break through the layer. Surface energy is proportional to the cube root of the penetration hardness and is important only when the joint interface radii is less than the surface energy divided by the yield strength. For aluminum this critical radii is approximately 10^{-7} cm. Also adding to required weld energy is a high Young's modulus. As the elasticity of a material increases so does the strength of the bonds holding it together.

2.3.2 Frictional Coefficients. Although frictional coefficients are often tabulated for materials at a given temperature, those coefficients can actually be described more completely by motion of the material and its interaction with an opposing surface. Frictional coefficients have been traditionally described as static or dynamic. In fact the type of motion is very important to the frictional coefficient which will dominate the development of the frictional force.

The static coefficient of friction describes that force which is necessary to

overcome inertia and set a body in motion. As such the static frictional coefficient is quite frequently described as a ratio of the friction force to the normal force of the body.

$$F=\mu N \tag{2}$$

Actually the static coefficient of friction is a due in part to the coefficient of adhesion, where this coefficient is a function of the penetration hardness of the material, the real area of contact and the compressive load joining the surfaces [1,16].

$$f'=pA_R \div L \tag{3}$$

The kinetic friction coefficient is a composite of interactions at the interface including plowing, adhesion and asperity deformation.

2.3.3 External Factors Effecting Friction. In addition to the material properties of a work piece, its environmental conditions have a large influence on the overall coefficient of friction which it generates. The factors most influential and pertinent to on-orbit friction welding are vacuum, temperature, contaminants and surface films.

CHAPTER THREE

Experimental Apparatus and Procedure

3.1 Apparatus

The inertia friction welding system and vacuum chamber used for this study were originally developed by D.Guza [26] and is extensively discussed by him. The system has been modified insignificantly since that work was completed. It proved to be an effective system for studying the affects of certain mechanisms on friction welding of aluminum alloys up to a vacuum of 10 torr. The electrical system is inadequate for higher vacuums or repeated testing under vacuum and is being replaced with a pneumatic drive unit.

For this study, the system used is shown in figure 3-1. A simple 3 horsepower Router motor from Porter Cable was used a prime mover to attain the desired rotational speed of the flywheel. The flywheel remained a fixed size so weld energy variations were a direct result of speed control. The motor has microprocessor speed control allowing speeds in 3000 r.p.m. increments from 10000 r.p.m. to 22000 r.p.m. The flywheel itself is a cylinder made of 304 stainless steel and is three inches in diameter. Design and testing of the flywheel [26] theoretically allow for sufficient weld energy of aluminum even at the lowest rotational speed of 10000 r.p.m. Appendix A gives a full account of the calculation of weld energy needed for aluminum. Figure 3-2 shows a schematic of the motor and flywheel assembly [26].

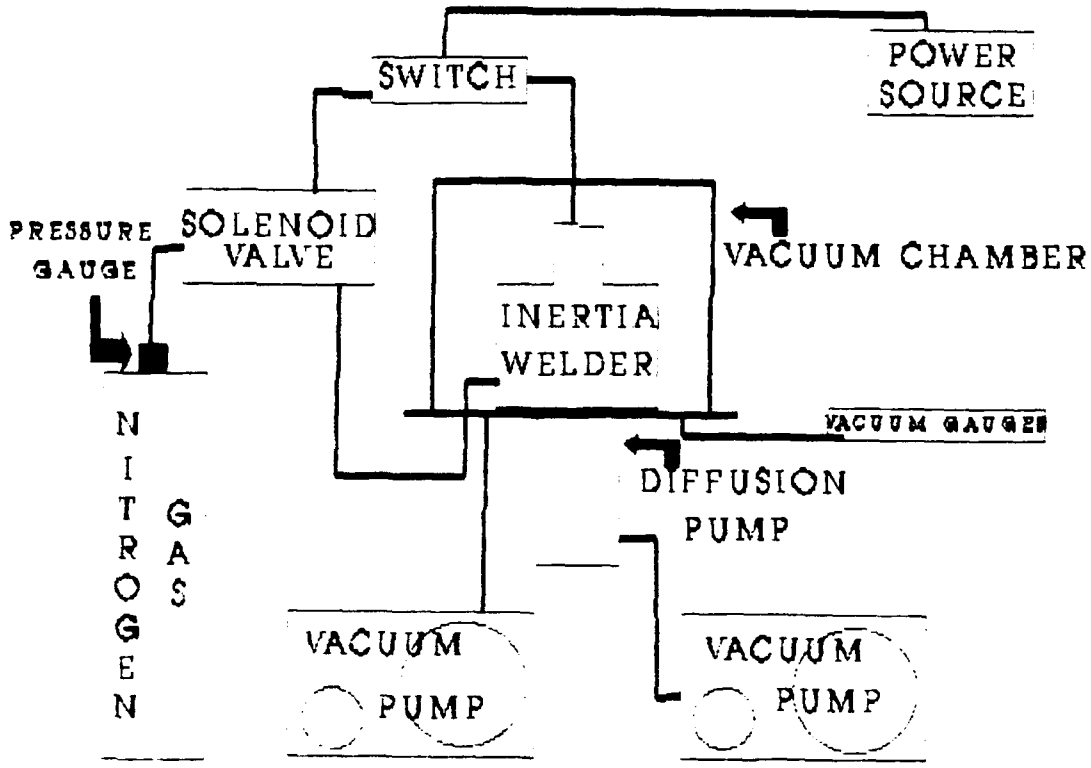

Figure 3-1 Experimental Apparatus Schematic

The welding force is provided by a 1.0 inch diameter model-50 Enerac hydraulic cylinder located below the base plate holding the specimen plate. The cylinder pressure is supplied by compressed nitrogen. The system is controlled by a single switch which operates three modes, valve, motor or off. For operation the switch is in motor for five seconds the switched to valve interrupting the power to the motor and forcing the specimen plate into the rotating stud to complete the weld.

The vacuum is provided by a rotary vane, mechanical roughing pump inside a stainless steel 24 by 27 inch bell jar. Although vacuums of higher than 10^{-2} torr were easily attainable, tests at vacuums higher than 1 torr were never attempted for this study. The vacuum is measured with a thermocouple type gauge.

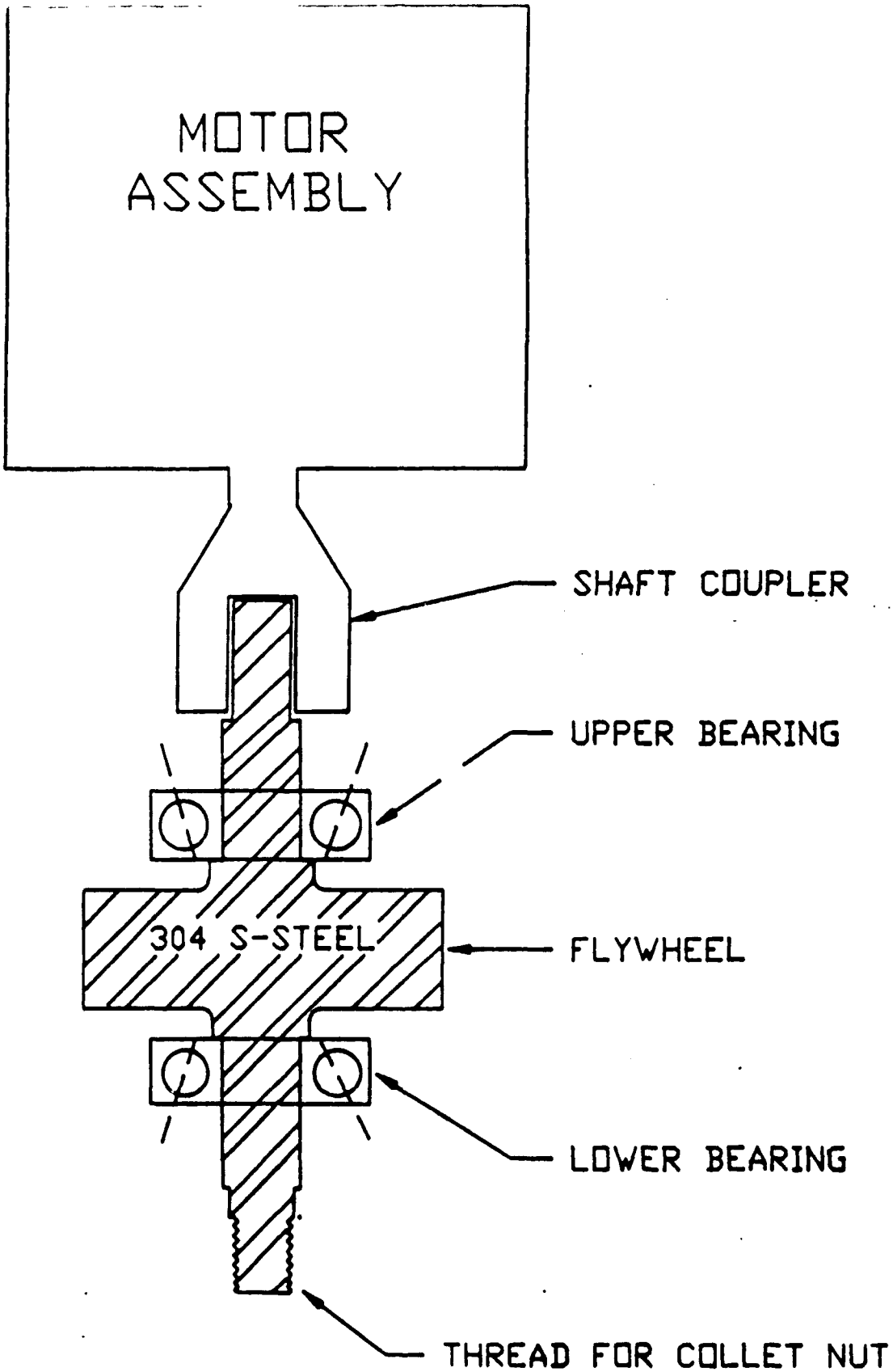

Figure 3-2. Motor and Flywheel Configuration

3.1.1 Vacuum Chamber Parameters. The vacuum bell jar is evacuated by one or two pumps through a gate in the bottom of the table on which the inertia welding system sits. The vacuum is monitored by a simple meter up to 10^{-1} torr and by an ionization meter above 10^{-2} torr. The system was monitored to obtain 10^{-2} torr but no tests were made. The bell jar evacuation is fairly quick taking approximately one minute to obtain 10^{-2} torr. The system has reached and held 10^{-4} torr [26] but not for this study.

3.1.2 Experimental Variables. In inertia friction welding, the inertia of the system, the rotational speed of the flywheel and the force are all variable. For this study, only the speed and force are varied. Tests were conducted over the entire range of the router controller but the majority were conducted a 13k r.p.m. and 19k r.p.m. A range of forces were used from 78 to 353 lbfs. within a tolerance of 3 lbf. Some preliminary tests were conducted with 2219-T87 and 4340 aluminum alloy to confirm results previously obtained [2,26] however, the emphasis here is on 2024-T3 aluminum alloy.

The material was tested under three conditions : clean, contaminated with cutting fluid and contaminated with an oxide layer. The clean condition undoubtedly contained an oxide layer since is was prepared in atmospheric conditions and then tested but it was only exposed for one minute. The specimens were cleaned with steel wool to remove the existing oxide layer and unknown contaminants [22]. The specimens tested for the contaminated with oxide layer condition were cleaned and then allowed to oxidize overnight for approximately twenty one hours. For the contaminated with cutting fluid condition, the specimens were cleaned the coated with a thin film of cutting fluid.

The test variations in speed, force and contamination were made in atmospheric and vacuum conditions. The vacuums tested were 100 torr, 50 torr and 10 torr. Testing was attempted at 1 torr but the motor failed as discussed in Appendix B.

3.1.3 Experimental Constants. The inertia of the system is a constant determined by the fixed dimensions of the flywheel and the shafting of the router [4,21]. For the majority of the tests the material was held constant ; 2024-T3 aluminum. The specimens that were tested were a rotating stud and a fixed plate. The stud and plate size and geometry were not varied at all. The studs were 0.25 inch diameter 1.0 inch in length. The plates were 0.125 inch thick and 2 inch by 1.5 inch length and width.

3.1.4 Materials Studied. Since 2219-T87 is expected to be widely used in applications on the space station, this material was studied previously in the initial use of this apparatus [26]. For this studied 2024-T3 aluminum alloy was used because it is relatively inexpensive and readily available because it is used extensively in the airframe industry. A large number of tests under a variety of conditions were conducted in this study so a inexpensive and easily obtainable material was desired. The object of these tests was to contribute to the 'big picture' of the factors affecting friction welding so the precise material to be used in the space station was not considered as important as observing a large number of testing conditions.

3.2 Testing Weld Quality

It has been suggested that, for friction welding there is a simple relationship for weld quality. Either a weld is good or it is bad and this can be determined by a consistent bend test on a stud to plate weld. If the stud bends without breaking a. the

joint, then it determined to be a good weld. This is the method used to determine which combinations of variable delivered good weld for this study. Figure 7 shows the proposed distribution of weld quality. Using this proposition, no tensile tests were performed on the specimens as can and have been done previously [26]. Weld quality was not determined on a quantitative basis here since the observation of combination affects was the interest for good or bad welds.

3.4 Experimental Procedure

Vacuum tests were conducted using a standard procedure described below. Several steps from the following list can be eliminated when atmospheric tests are conducted and are denoted by a asterisk. Specimen preparation consists of removing the oxide layer on the stud and plate with steel wool. The clean tests are then conducted after a one minute delay. The cutting fluid contaminated tests are conducted after a thin film has been placed on the stud and plate. The oxide layer tests were all conducted after between 21 and 22 hours of exposure to the atmosphere ; no further preparation was necessary.

1. Set desired rotational speed on the router and ensure local switch is on.
2. * Turn on vacuum meter and adjust to 760 torr initially.
3. Ensure table gate is open and valve alignment is correct.
   (a) open vacuum meter valve
   (b) close vacuum release valve
   (c) check vacuum pump oil level
4. Ensure control switch is in the off position.

5. Prepare a stud and install it in the collet nut ensuring tightness with router wrenches. CAUTION: Remove wrenches from assembly area.

6. Prepare plate, install in base plate assembly and install cylinder spacer to bring plate to within 0.125 inches of the stud.

7. * Position and lower vacuum bell jar over assembly ensuring a tight seal.

8. Ensure all power supply switches are on.

9. Select the desired pressure on the compressed gas cylinder for the welding force to the base plate.

10. * Turn on vacuum pump until desired vacuum is reached, then secure.

11. Turn control switch to motor position for five seconds.

12. Turn control switch quickly to the valve position to interrupt power and complete the weld.

13. * Turn off vacuum meter.

14. * Open vacuum release valve.

15. Open pressure bleed valve and allow cylinder to retract.

16. * When vacuum is replaced in the bell jar, lift the jar above the welding assembly.

17. Turn control switch to the off position.

18. Remove the stud/plate assembly from the collet nut. Note heat and aluminum powder accumulation.

19. Record weld speed, pressure and contamination on specimen.

CHAPTER FOUR

Experimental Results

The testing of aluminum alloys resulted in many possible combinations for possible presentation. The tables below display the results in the most useful manner for easy comparison of affects. Pictures of some of the most interesting affects and some of the best combinations for welding are also displayed. A detailed analysis of the results observed and their correlation with results expected from theory follows in the next chapter. Atmospheric testing of 2024-T3 using welding force less than 552 lbf was not weldable for any speed available.

The tests were run with varying rotational speeds, forces and with clean and contaminated surfaces. The contaminated surfaces were either an oxide layer allowed to form over 21 to 22 hours or a thin film of cutting fluid. Buttercut cutting fluid was used as representative as many different types are possible for use and usually are selected only by preference of the machinist. The forces used were actually based on uniform increments of pressure from 100 to 450 psi. The forces were determined by the piston area over which the pressure acted. The pressure regulator did not yield regular intervals of force as easily and repeatable as it did intervals of pressure. The forces used, therefore may appear irregular choices.

Tables 4-1 and 4-2 are the results of preliminary atmospheric testing to determine some affects from joining dissimilar aluminum alloys and finding the range of speed and force which would reveal the most information about individual factors. The results are interesting and revealing enough in their own right to warrant presentation rather than simply state where how the ranges were determined.

Table 4-1. Atmospheric Testing

Various aluminum alloy combinations
19 k RPM 78 lbf oxide layer

Plate Material	Stud Material	Observations
2219	2219	good weld. full, even coverage with no gap.
2219	4043	strong weld. significant material flow. no gap.
2219	2024	weak weld. partial coverage.
2024	2024	weak weld. partial coverage.

Table 4-2. Atmospheric testing

2024-T3 Aluminum alloy
22 k RPM

Force (lbf)	Contamination	Observations
118	oxide layer	very weak weld.
157	oxide layer	weak weld.
157	clean	weak weld.
196	oxide layer	good weld. partial coverage. large gap.
236	oxide layer	good weld. full coverage. large gap.
236	clean	good weld. full coverage. large gap.
314	clean	good weld. full coverage. smaller gap.

After the preliminary testing, The speeds of 19 k and 13 k RPM were chosen to complete the atmospheric testing and carry out the vacuum testing. Both speeds gave good welds but were sufficiently different in energy content to give comparative results. Some intermediate tests were made at 10 k and 16 k that are not presented here. The 10 k runs resulted in no or very poor quality welds while the 16 k tests were not significantly different from the 19 k tests.

Table 4-3. Atmospheric testing

2024-T3 Aluminum Alloy
19 k RPM

Force (lbf)	Contamination	Observations
216	clean	good weld. large gap.
236	clean	good weld. large gap.
236	buttercut	very weak weld.
236	oxide layer	good weld. large gap
314	buttercut	good weld. large gap. dust.
353	clean	strong weld. full coverage. no gap.

Table 4-4. Atmospheric testing

2024-T3 Aluminum alloy
13 k RPM

Force (lbf)	Contamination	Observations
216	clean	good weld. large gap. chips.
236	clean	good weld. small gap. chips
236	buttercut	no weld.
236	oxide layer	good weld. large gap.
314	buttercut	no weld.

At the completion of atmospheric testing and preliminary vacuum testing, a force of 236 pounds was chosen for further testing in vacuum. This force yielded good welds but was near the lower limit to obtain sufficient joint strength. Further investigation at a constant force allowed closer examination of vacuum on the remaining parameters of speed and surface layer.

Table 4-5. Testing at 100 Torr

2024-T3 Aluminum alloy
19 k RPM

Force (lbf)	Contamination	Observations
157	clean	good weld. small gap.
196	clean	good weld. partial coverage with small gap.
236	clean	good weld. no gap.
236	buttercut	good weld. flash curled and split. small gap.
236	oxide layer	good weld. small gap.flash split. chips.
353	clean	good weld. flash split.

Table 4-6. Testing at 100 Torr

2024-T3 Aluminum
13 k RPM 236 lbf

Contamination	Observations
clean	good weld. small gap.
buttercut	good weld. small gap. dust.
oxide layer	good weld. small gap. slip.

Continuing to increase vacuum, 50 torr and 10 torr were investigated before time and experimental apparatus failure forced the conclusion of the tests. In the noted observations, chips and dust indicate the amount of surface wear before welding occurred. Although this happened at higher forces at atmospheric pressure, it occurred quite frequently in vacuum at lesser forces.

Table 4-7. Testing at 50 Torr

2024-T3 Aluminum alloy
19 k RPM 236 lbf

Contamination	Observations
clean	good weld. very small gap. split flash. chips.
buttercut	good weld. small gap. split, curled flash.
oxide layer	good weld. small gap. split flash. dust, chips.

Table 4-8. Testing at 50 Torr

2024-T3 Aluminum alloy
13 k RPM 236 lbf

Contamination	Observations
clean	good weld. large gap. curled flash.
buttercut	weak weld. small gap. split, curled flash.
oxide layer	good weld. large gap. slip.

Table 4-9. Testing at 10 Torr

2024-T3 Aluminum alloy
19 k RPM 236 lbf

Contamination	Observations
clean	good weld. small gap.
buttercut	good weld. small gap. chips.
oxide layer	good weld. no gap. dust.
clean (196 lbf)	extremely weak weld.

Table 4-10. Testing at 10 Torr

2024-T3 Aluminum alloy
13 k RPM 236 lbf

Contamination	Observations
clean	good weld. large gap. slip.
buttercut	very weak weld.
oxide layer	good weld. small gap. curled flash. slip.

CHAPTER FIVE

Discussion of Results

5.1 Parameter Combinations Yielding Preferred Welds

A preferred weld is one which uses minimal energy, produces sufficient flash and a minimal gap between the base plate and the stud. The weld must be strong enough to withstand a bend test, that is the stud bending before the weld gives way. The flash and stud metal deformation must be uniform and full to eliminate possible contaminates from the joint area. The gap must be minimized to prevent an area where corrosion and fatigue stresses have more potential to deteriorate the integrity of the weld. In all the welds, the cross sectional area of the gap material was less than that of the flash where no gap was evident. The gap material also presented an abrupt joint to the base plate rather than the preferred smooth attachment with sufficient material deformation.

The apparent causes of the production of a preferred weld were a combination of rotational speed, force, contamination and vacuum. Figure 5-1 shows the best welds produced and the conditions under which they were produced.

a. 2219/2219 19 k RPM
78 lbf oxide layer
760 Torr

b. 2024/2024 19 k RPM
236 lbf clean
100 Torr

c. 2024/2024 19 k RPM
236 lbf clean
50 Torr

d. 2024/2024 19 k RPM
236 lbf oxide layer
50 Torr

e. 2024/2024 19 k RPM
236 lbf oxide layer
10 Torr

Figure 5-1 Preferred Welding Conditions

As can be seen from the above conditions, the type of material being friction welded has a great impact on the amount of energy needed to obtain an effective weld. 2219-T87 aluminum alloy is harder than the 2024-T3 and thus required only one third of the force to generate a comparable weld. Table 5-1 shows the characteristics of the types of aluminum alloy used in these tests [22].

Table 5-1. Characteristics of 2219-T81 and 2024-T3 Aluminum Alloys

Characteristic	2024-T3	2219-T81
Yield Strength (kpsi)	50	50
Ultimate Tensile Strength (kpsi)	70	66
Shear Strength (kpsi)	41	39
Fatigue Strength (kpsi)	20	15
Brinell Hardness (500 kg load)	120	123
Melting Range (fahrenheit)	935 - 1180	1010 - 1190
Density (lbs/cu. in.)	0.100	0.102
Thermal Conductivity (25 C, CGS)	0.29	0.30
Electrical Conductivity (% IACS)	30	32

19 k RPM was a good rotational speed for the 236 lbf force on 2024-T3 alloy at all levels of vacuum tested. 236 lbf was not quite sufficient at atmospheric condition to create a preferred weld. This indicates as do other fairly good welds in vacuum, compared to atmospheric conditions, that less energy may be required in vacuum. The oxide layer did not appear to detract from the weld or require additional energy as compared to the clean condition as has been previously suspected [2]. This could be misleading however, since the clean samples were not actually oxide free due to testing procedure. In fact, the clean and oxidized conditions had nearly the same results preventing any conclusions from their comparison other than tests where an oxide free surface is tested is needed.

In no case was a weld where the surface had been contaminated by cutting fluid a preferred weld. This was not a great revelation since lubricant is designed to inhibit friction, however, it does emphasize the need for some surface preparation if the material has been exposed to lubricating contaminates or an increase in energy is required.

Figure 5-2 displays weld conditions that were nearly as good as those in figure 5-1. These welds demonstrate the importance of the correct force being used. The forces used here were either slightly too large or small. Too large a force starts splitting the flash creating potential fracture points in the stud. Too small a force results in a gap the consequences of which have already been discussed.

a. 2024/2024 19 k RPM
353 lbf clean
760 Torr

b. 2024/2024 19 k RPM
314 lbf buttercut
760 Torr

d. 2024/2024 19 k RPM
236 lbf oxide layer
100 Torr

e. 2024/2024 19 k RPM
236 lbf buttercut
10 Torr

Figure 5-2 Satisfactory Weld Conditions

The buttercut treated surfaces left slight gaps and material chips. The energy spent clearing the lubricant layer didn't leave enough for a complete weld. There was sufficient energy to create enough flash to expel contaminates and these would most likely be sufficient welds for non-critical applications. Figure 5-2 (d) shows the decrease in gap size from the atmospheric condition. This is a trend which is confirmed by the 50 and 10 torr results without any gap as shown in figure 5-1. The atmospheric condition using 353 lbf shows a good weld but did produce some chips from the excessive force used.

5.2 Variational Explanations

The affects of contamination, welding force and rotational speed are distinct enough to allow discussion in relation to theory. The theorized amount of energy requires for aluminum (Appendix A) is approximately 485 ft-lbf for sufficient welding to occur. This amount of energy is not for the aluminum alloy 2024-T3 but is approximates the value closely enough to determine reasonable combinations of force and rotational speed given a fixed inertia. From this approximation, a rotational speed of 12223 rpm with a force of 242.5 lbf for the experimental system in use should have produced satisfactory welding conditions at atmospheric conditions. In a vacuum no theoretical adjustment weld energy is possible which is why actual experimental conditions at atmospheric pressure was determined. The vacuum conditions were set at the experimental atmospheric conditions. The conditions of surface film, oxide layer, insufficient or excess arresting force and incorrect rotational speed have predetermined theoretical affects on

friction. Using friction theory to predict what should happen under these conditions leaves some room for determining the affect vacuum had on the welds when the joints are examined.

From section 2-3 of this thesis, the oxide layer increases the hardness of the surface significantly in aluminum. This increased hardness requires additional energy to create a weld. The lubricant layer acts as a coolant dissipating heat into the surface film instead of the joint requiring additional heat to weld. The additional heat can be generated by increasing the torque through decreased rotational speed. The rotational speed is a direct reflection of the amount of energy supplied to the weld. The rotational speed also determines the amount of torque delivered to the surface. The speed and force must then be combined to provide sufficient energy and torque without exceeding the yield stress of the material and causing shear before welding.

The combination of parameters preventing any welding generally involve insufficient energy input to overcome the circumstances of the joining. Only two tests were performed where absolutely no welding occurred. Both samples were coated with buttercut at atmospheric conditions and at low speed (13k r.p.m.). The lubricating effect of the cutting fluid dissipated all of the input energy before the real surfaces of the samples mated. There were several conditions which yielded weak welds which could be broken very easily. These cases are listed in table 5-2, all materials are 2024-T3 with the exception of the first entry which is a 2219-T87 stud with a 2024-T3 plate. Again the same problem occurred with the lubricated samples, however under vacuum some welding was able to occur while in the atmosphere there was none. The other tests

suffered from poor combinations of rotational speed and force. The one test at 10k r.p.m. delivered too much torque for the material to sustain with out shearing. This weld broke without a bend test but just as it was taken from the apparatus.

Table 5-2. Conditions Yielding Weak Welds

Pressure (torr)	R.P.M. (k)	Force (lbf)	Contamination
760*	19	78	oxide
760	19	78	oxide
760	19	118	oxide
760	22	118	oxide
760	22	157	oxide
760	22	157	clean
760	10	236	clean
10	19	196	clean
10	13	236	buttercut
50	13	236	buttercut

Of the remaining tests run, the welds were strong enough to withstand a bend test but in general would not be considered acceptable welds due to four main reasons. The first group of these welds that is unacceptable is due to insufficient flash. As was discussed previously, without enough flash impurities may not be extruded from the joint weakening the integrity of the weld. These tests all occurred at the rotational speed of 13 k r.p.m. over a range of forces and vacuums. An example of these welds can be seen in figure 5-3 (a,b,c). This suggests that 13 k r.p.m. is less than the optimum speed for

heat liberation during the welding process.

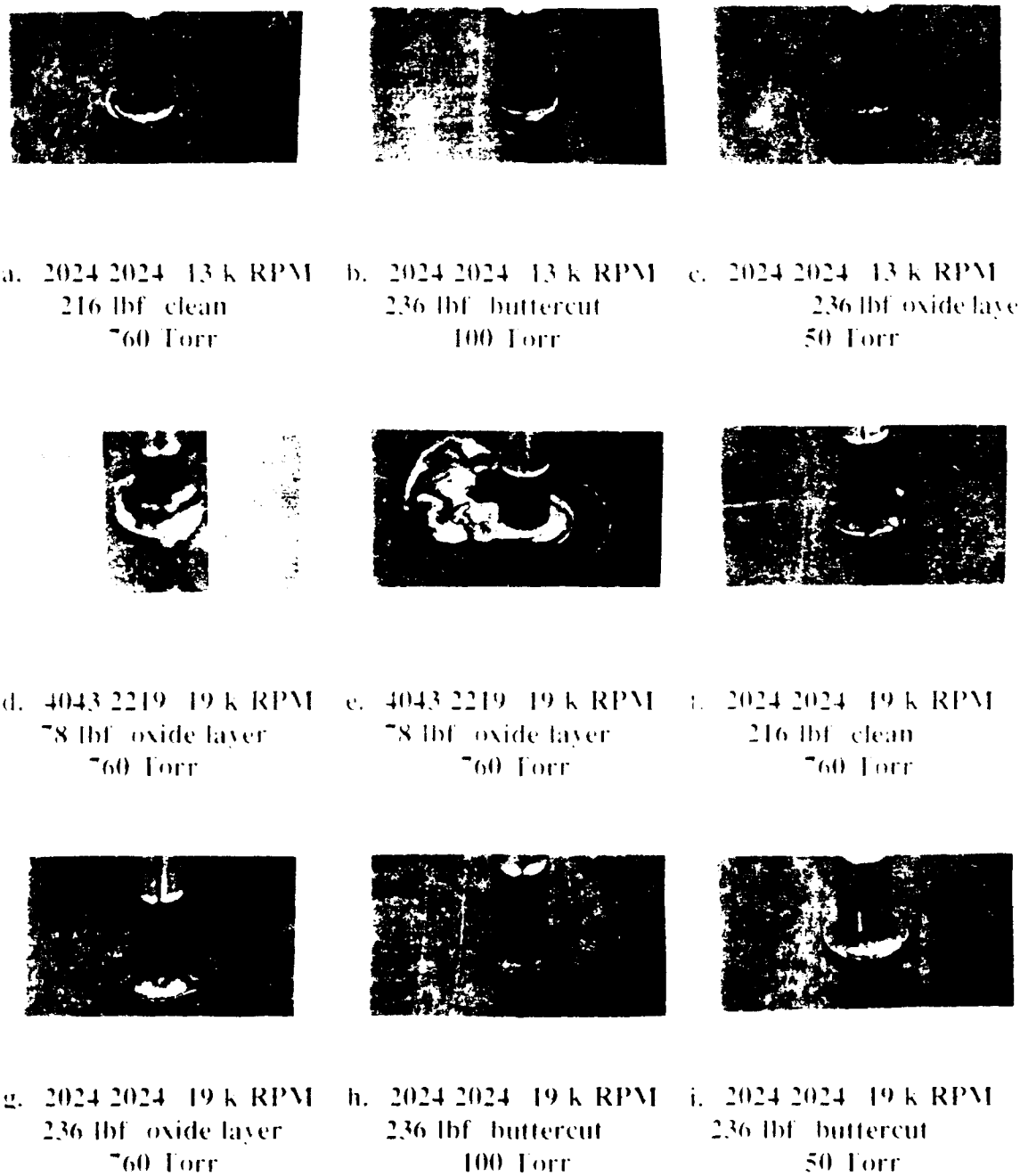

a. 2024 2024 13 k RPM
216 lbf clean
760 Torr

b. 2024 2024 13 k RPM
236 lbf buttercut
100 Torr

c. 2024 2024 13 k RPM
236 lbf oxide layer
50 Torr

d. 4043 2219 19 k RPM
78 lbf oxide layer
760 Torr

e. 4043 2219 19 k RPM
78 lbf oxide layer
760 Torr

f. 2024 2024 19 k RPM
216 lbf clean
760 Torr

g. 2024 2024 19 k RPM
236 lbf oxide layer
760 Torr

h. 2024 2024 19 k RPM
236 lbf buttercut
100 Torr

i. 2024 2024 19 k RPM
236 lbf buttercut
50 Torr

Figure 5-3. Unacceptable Weld Conditions

The next category of samples is unacceptable due to excessive plastic deformation, figure 5-3 (d,e). There are only two samples in this group both under the same circumstance. These tests were run with dissimilar materials of a 2219-T87 plate and a 4043 stud. The 4043 stud appeared to be too soft for the force and amount of energy input to the weld.

A large gap distinguished the next group, figure 5-3 (f). These generally resulted from insufficient force for the rotational speed that was used. As discussed before, the correct combination of energy and torque is critical. The gap, which is of reduced diameter from the flash, invites corrosion cracking and fatigue stresses. The gap also reduces the amount of bending stress a joint could withstand.

The final group presented some rather spectacular splitting of the flash, figure 5-3 (g,h,i). This group resulted from two sources, excessive force and a lubricated surface.

5.3 Experimental Failings

Vacuum above 10 torr was not investigated due to experimental apparatus and time limitations. Combinations to determine the absolute minimum energy to determine a sufficient weld of 2024-T3 clean and contaminated were not completely experimented. Tensile tests of the specimens may assist in quantifying the affects of vacuum. A more complete testing in higher vacuum may be accomplished with this apparatus after further investigation into electric motor solutions is completed (Appendix B).

CHAPTER SIX

Conclusions and Recommendations

6.1 Conclusions

Testing of 2024-T3 aluminum alloy under various conditions revealed a basic adherence to existing friction theories. Lubricated surfaces reduce friction thereby increasing the amount of energy and torque required to achieve a sufficient weld. An aluminum oxide layer increases the surfaces hardness significantly over the substrate again increasing the amount of energy to break through that layer and produce a good weld. In a vacuum, it appears that the absence of oxygen and moisture increases the frictional coefficient and aides in the friction welding process. This is demonstrated in the better welds achieved in a vacuum over atmospheric conditions under otherwise similar circumstance.

The difference between what are termed clean welds and oxide layered samples are insignificant. This is due not to the insignificance of the oxide layer but to the inability of this experimental procedure to truly weld a clean sample. No experimental conclusion on the affect of the oxide layer can be made until testing in a vacuum where the sample can be cleaned and tested without exposure to the atmosphere can be completed.

6.2 Recommendations

Further investigation of 2024-T3 at higher vacuums would particularly informative.

Combinations of weld speed and force to yield the minimum required for a sufficient weld under any given vacuum condition may result in a better understanding of the affects of vacuum. A complete investigation of new brushes in the motor will lead to better use of the equipment on hand. Brushes with proper coating for both atmospheric and vacuum conditions should be tried. Testing should begin at the highest vacuum to be tested, not the lowest. This will yield some high vacuum data before motor failure if different brushes do not solve the problem. A pneumatic system has been order. Although pneumatic systems leak [26] possibly destroying the vacuum integrity, some set up where the vacuum pumps are engaged until the motor is started and welding is complete should be achievable. This type of system would have to regulate the rate at which vacuum is maintained based on the rate pneumatic leaks deteriorate the vacuum. This system would be purely to test in a vacuum.

A better solution to testing and one which needs to be investigated regardless of the replacement of the electric motor is to design a system where the samples can be cleaned in the vacuum then joined without the vacuum ever being broken. This is the only real way to obtain data on the benefit or lack of affect of the oxide layer on weld energy required to join aluminum under friction welding. Testing is planned at Marshall Space Center this summer and ongoing September to February by M.I.T. to further investigate friction welding and oxide layer affects.

REFERENCES

1. Rabinowicz,E., "Friction and Wear of Materials", Wiley, 1964

2. Smith,M., "Effect of Vacuum on the Friction of Aluminum", MIT, 1990

3. Masubuchi,K., "Feasibility of Remotely Manipulated Friction Welding in Space", 1987

4. ASM Committee on Flash, Friction and Stud Welding, "Friction Welding"

5. Masubuchi,K., "Initial Study of Remotely Manipulated Stud Welding for Space Application", Welding Journal volume 67 #4, 1988

6. Masubuchi,K., "Welding in Space"

7. Brand, Newton and Montiel, "Workshop Launches Welding in Space Research", Welding Journal

8. ASWE, "Welding Safety and Health", Welding Journal

9. Johnson and Wetzel, "Engineering Construction and Operation in Space : vol. 2" Proceedings of Space, 1990

10. NASA, "Space Station", Information Summaries, August 1988

11. Kuvin, "Welding in Space : Questions Remain", NASA, May 1990

12. Watson, "Tutorial Survey Paper : Engineering Considerations for On-Orbit Welding Operations", Journal of Astronautical Sciences, 1986

13. NASA, "Skylab M551 Metals Melting Experiment", NASATMX-64960, May 1975

14. Enequist and Nord, "Study of Space Environment Fabrication and Repair Techniques", 1966

15. NASA, "Selected Welding Techniques", NASA Report No. SP-501 and SP-5009

16. Buckley, "Surface Effects on Adhesion, Friction, Wear and Lubrication", Elsevier Scientific Publishing CO, 1981

17. Agapakis,J.E., Wittels,N. and Masubuchi,K., "Automation and Robotisation in Welding and Allied Processes", International Welding Institute, Pergamon Press, 1985

18. Buckley,J.D. and Stein,B.A., "Feasibility of Remotely Manipulated Welding in Space - A Step in the development of Novel Joining Technologies", Joining Technologies for the 1990's : Welding, Brazing, Soldering, Mechanical, Explosive, Solid State and Adhesive, Noyes Data Corporation, 1984

19. Suh,N.P., "Tribophysics", Prentice-Hall, 1986

20. Vill',V.I., "Friction Welding of Metals", American Welding Society, 1962

21. Nicholas,E.D., "Friction Welding : An Introduction to the Process", "A Quality Monitor for Friction Welding", "Applications in Review", Exploiting Friction Welding

22. American Welding Society, "Welding Aluminum", AWS - The Aluminum Association, 1967

23. Arnold,J.R.,"Materials, Processing and Construction",Space Manufacturing Facilities 2 : Space Colonies, American Institute of Aeronautics and Astronautics, Proceedings of the third Princeton/AIAA Conference, May 9 - 12, 1977

24. Kline,R.L.,"Fabrication Methods for Large Space Structures",Space Manufacturing Facilities 2 : Space Colonies,American Institue of Aeronautics and Astronautics, Proceedings of the third Princeton/AIAA Conference, May 9 - 12, 1977

25. Cheston,T.S., "Social Sciences Aspects of Space Manufacturing Facilities (Workshop)",Space Manufacturing Facilities 2 : Space Colonies,American Institue of Aeronautics and Astronautics, Proceedings of the third Princeton/AIAA Conference, May 9 - 12, 1977

26. Guza,D.E., "Inertia Friction Welding of Aluminum Alloys for Space Repair Applications", MIT, 1988

27. Shobert,E.I. 2nd, "Carbon Brushes : The Physics and Chemistry of Sliding Contacts", Chemical Publishing Company, New York, 1965

APPENDIX A

Energy Calculations for Aluminum

One of the basic advantages of friction welding is that it uses only one-tenth to one-fifth of the energy required for flash welding [20]. The reason for this reduction in energy is that in friction welding heat is only dissipated in the weld region at the interface. The minimum energy required to friction weld aluminum is determined by some basic calculations considering the geometry of the work pieces. For inertia friction welding where the stud is the rotated member the energy required for welding can be calculated as a function of stud diameter [26].

$$E = 15500 * d^k \tag{4}$$

where : E = weld energy (ft-lbf)
d = stud diameter (inches)
k = 2.5
15500 is a combined inertia/material conversion for aluminum

For the 0.25 inch diameter stud used in these experiments, the energy required was 484.4 ft-lbf. The weld force associated with this required energy is approximately one-half.

$$F_w = 0.5 * E \tag{5}$$

where : F_w = weld force (lbf)

The rotational speed range for friction welding is generally anticipated to be 800 to 3000 s.f.p.m. [20] which is 12223 to 45837 r.p.m. for this experimental set up [26]. From these initial calculations the range of the initial testing was determined. Since the rotational speeds are for aluminum, variation was expected. Also the energy calculated was minimum so variations on it were possible to see different affects.

APPENDIX B

Electrical Motor Failure Analysis

The electrical motor used to rotate the flywheel in the experimental set up was a 3 hp model 5182 from a Porter Cable heavy duty router. This motor was designed for atmospheric use only so while it could be used in a vacuum for a short period of time, the shortcomings of direct current electrical motors in vacuum quickly became obvious. The electrical motor failed after relatively few operations in vacuum. The failure seemed to depend on the level of vacuum and the amount of time the motor operated in the vacuum. During World War II, when airplanes first began to operate in high, oxygen deficient altitudes one of the problems that had to be overcome was the shorting of direct current motors exposed to the environment [27].

In the normal operation of a direct current motor, carbon brushes in contact with a copper commutator with an arc between the two is the basic necessity for electrical generation. In the presence of oxygen and moisture, a protective lubricating layer is formed on the commutator preventing excessive brush wear. The brush wear in a vacuum is referred to as dusting. In vacuum the application of special coatings or the use of an alternate material for brushes, other than carbon, solves the wear problem quite effectively. The brushes used in the experimental apparatus for this thesis were ordinary carbon without any coating. Brushes containing molybdenum sulfide and lithium carbonate have been found to be successful in high altitude operation for initial starts without previous run-in. These brushes deliver more uniform friction and more steady

contact drop than ordinary carbon brushes also [27]. Brush grades for space environment operations have been suggested by Shobert [27] and are reproduced in table B-1.

Table B-1. Brush Grades for High Altitude and Space

Grade Number	Applications
14	Instrument and power slip rings, low voltage motors, space applications
23	Generators, starter generators, inverter rings, inverter commutators, dynamotors for high altitude and space
24	Inverter commutators and rings for high altitude and space
25	Inverter commutators and rings, dynamotors
26	Low-noise signal and power on silver slip rings in space

Even if excessive wear is not experienced by the brushes, the absence of the oxygen and moisture can cause other problems equally detrimental to the operation of the motor. The absence of moisture causes an increase in the friction coefficient and a decrease in the contact drop. This is because moisture aides in the formation of a graphite containing film on the collector which acts as a lubricant. The extra friction of the carbon brushes, leaving deposits on the commutator, can cause sufficient interference in commutation to create an arc which reaches from one brush to the next. This phenomena is called flashover and will short the d.c. motor instantly. Successful operation of d.c. electric motors with treated brushes has been demonstrated below 10^{-9}

torr [] so the 10^{-2} torr testing at M.I.T.'s lab should not be a problem.

The motor used in the experimental apparatus for this thesis was a 3 h.p. d.c. motor. It ceased operation once at 1 torr and was repaired by replacing the brushes and lower bearing. The motor ceased functioning twice more, once at 1 torr and once at 10 torr. The incidence at 10 torr occurred after several consecutive vacuum tests while the second one torr incidence happened after only four runs under vacuum. Inspection of the motor revealed heavy smutting on the commutator and wear and chipping of the brushes. The brushes also showed severe burn marks. Although this does not prove that the cause of the failure was excess friction due to improperly treated brushes for vacuum operation, this is the most probable explanation. Previously [26], it has been theorized that overheating of the motor caused high temperature safety features to cease operation. This is not likely since the seizure at one torr was immediate and the motor was not heated due to operation. Further testing of the motor under vacuum using a variety of brushes would be relatively inexpensive and should prove the brush material to be the source of the d.c. motor failure.

FUNDAMENTAL MECHANISMS AFFECTING FRICTION WELDING UNDER VACUUM

By

Benedicta Renee Jacoby

B.S. Engineering
University of California, Berkeley (1985)

Submitted to the department of
OCEAN ENGINEERING
In Partial Fulfillment of the Requirements
For the Degrees of

MASTER OF SCIENCE IN NAVAL ARCHITECTURE AND MARINE ENGINEERING

and

MASTER OF SCIENCE IN MECHANICAL ENGINEERING

at the

MASSACHUSETTS INSTITUTE OF TECHNOLOGY
June, 1991

O Benedicta Renee Jacoby, 1991

The author hereby grants to M.I.T. permission to reproduce and to distribute copies of this thesis document in whole or in part.

Signature of Author _____ Benedicta Renee Jacoby
Department of Ocean Engineering, May 1991

Certified by _____ Koichi Masubuchi
Professor Koichi Masubuchi
Ocean Engineering Dept., Thesis Supervisor

Certified by _____ Ernest Rabinowicz
Professor Ernest Rabinowicz
Mechanical Engineering Dept., Thesis Reader

Accepted by _____ A. Douglas Carmichael
A. Douglas Carmichael, Chairman
Departmental Graduate Committee
Department of Ocean Engineering

FUNDAMENTAL MECHANISMS AFFECTING FRICTION WELDING UNDER VACUUM

By

Benedicta Renee Jacoby

B.S. Engineering
University of California, Berkeley (1985)

Submitted to the department of
OCEAN ENGINEERING
In Partial Fulfillment of the Requirements
For the Degrees of

MASTER OF SCIENCE IN NAVAL ARCHITECTURE AND MARINE ENGINEERING

and

MASTER OF SCIENCE IN MECHANICAL ENGINEERING

at the

MASSACHUSETTS INSTITUTE OF TECHNOLOGY
June, 1991

O Benedicta Renee Jacoby, 1991

The author hereby grants to M.I.T. permission to reproduce and to distribute copies of this thesis document in whole or in part.

Signature of Author_____
Department of Ocean Engineering, May 1991

Certified by_____
Professor Koichi Masubuchi
Ocean Engineering Dept., Thesis Supervisor

Certified by_____
Professor Ernest Rabinowicz
Mechanical Engineering Dept., Thesis Reader

Accepted by_____
A. Douglas Carmichael, Chairman
Departmental Graduate Committee
Department of Ocean Engineering

FUNDAMENTAL MECHANISMS AFFECTING FRICTION WELDING UNDER VACUUM

By

Benedicta Renee Jacoby

B.S. Engineering
University of California, Berkeley (1985)

Submitted to the department of
OCEAN ENGINEERING
In Partial Fulfillment of the Requirements
For the Degrees of

MASTER OF SCIENCE IN NAVAL ARCHITECTURE AND MARINE ENGINEERING

and

MASTER OF SCIENCE IN MECHANICAL ENGINEERING

at the

MASSACHUSETTS INSTITUTE OF TECHNOLOGY
June, 1991

O Benedicta Renee Jacoby, 1991

The author hereby grants to M.I.T. permission to reproduce and to distribute copies of this thesis document in whole or in part.

Signature of Author_____
Department of Ocean Engineering, May 1991

Certified by_____
Professor Koichi Masubuchi
Ocean Engineering Dept., Thesis Supervisor

Certified by_____
Professor Ernest Rabinowicz
Mechanical Engineering Dept., Thesis Reader

Accepted by_____
A. Douglas Carmichael, Chairman
Departmental Graduate Committee
Department of Ocean Engineering