AD-A240 059

DTIC

(2)

SMALL UPPER STAGE BASIC PROGRAM FINAL REPORT

Contract No. N00014-90-C-2309

91-R-1511

Prepared for:

NAVAL RESEARCH LABORATORIES
4555 Overlook Avenue Southwest
Washington D.C. 20375-5000

Prepared by:

ROCKET RESEARCH COMPANY
11441 Willows Road N. E.
Redmond, Washington 98052-1012

August 1991

ROCKET RESEARCH COMPANY

REDMOND, WASHINGTON

Olin AEROSPACE DIVISION

91-10127

SMALL UPPER STAGE
BASIC PROGRAM FINAL REPORT

Contract No. N00014-90-C-2309

DTIC
COPY
INSPECTED

Accession For
A-1

Report No. 91-R-1511

Date: August 1991

EDITED BY:

T E Frei 8/26/91

T. E. Frei
Development Engineer

APPROVED BY:

T.E. Frei For 8/26/91

Thane Reitan
SUS Project Manager

REPORT DOCUMENTATION PAGE

Form Approved
OMB No. 0704-0188

Public reporting burden for this collection of information is estimated to average 1 hour per response, including the time for reviewing instructions, searching existing data sources, gathering and maintaining the data needed, and completing and reviewing the collection of information. Send comments regarding this burden estimate or any other aspect of this collection of information, including suggestions for reducing this burden, to Washington Headquarters Services, Directorate for Information Operations and Reports, 1215 Jefferson Davis Highway, Suite 1204, Arlington, VA 22202-4302, and to the Office of Management and Budget, Paperwork Reduction Project (0704-0188), Washington, DC 20503.

1. AGENCY USE ONLY (Leave blank)	2. REPORT DATE	3. REPORT TYPE AND DATES COVERED
—	27 August 1991	Final

4. TITLE AND SUBTITLE

Small Upper Stage Basic Program Final Report

5. FUNDING NUMBERS

N00014-90-C-2309

6. AUTHOR(S)

T. E. Frei (Editor)

7. PERFORMING ORGANIZATION NAME(S) AND ADDRESS(ES)

Rocket Research Company
Olin Aerospace Division
Post Office Box 97009
Redmond, Washington 98073

8. PERFORMING ORGANIZATION REPORT NUMBER

91-R-1511

9. SPONSORING/MONITORING AGENCY NAME(S) AND ADDRESS(ES)

Department of the Navy
Naval Research Laboratory
Washington, DC 20375-5000

10. SPONSORING/MONITORING AGENCY REPORT NUMBER

11. SUPPLEMENTARY NOTES

—

12a. DISTRIBUTION/AVAILABILITY STATEMENT

Unlimited

12b. DISTRIBUTION CODE

—

13. ABSTRACT (Maximum 200 words)

The goal of this effort was to create a generic, low-cost propulsion stage design capable of being integrated to several different launch vehicles (LV's) and capable of providing a mission enabling orbit transfer function to a variety of different small satellite missions. In order to accomplish this goal, a launch vehicle survey was conducted to establish the current LV capability and environments with respect to small satellites. In addition, a small satellite survey was conducted to establish the orbital needs of the small satellite community. With this information, the SUS specification was created. Based on this specification, the preliminary design of the SUS was developed. This design is capable of being integrated onto several different LV's and is capable of providing the orbit adjust requirements for approximately 75 percent of the small satellite missions identified. The SUS design has capabilities of providing small satellites with several orbit transfer maneuvers from a LEO parking orbit (e.g., Hohmann Transfer, circularization, plane change and de-orbit). The SUS. containing a single or multiple small satellites, can be integrated onto a host LV as a primary on the SLV's, as a secondary on the MLV's or as multiples on a dedicated LV.

14. SUBJECT TERMS

Small Upper Stage, Small Satellite Orbit Transfer Vehicle

15. NUMBER OF PAGES

140

16. PRICE CODE

—

17. SECURITY CLASSIFICATION OF REPORT	18. SECURITY CLASSIFICATION OF THIS PAGE	19. SECURITY CLASSIFICATION OF ABSTRACT	20. LIMITATION OF ABSTRACT
Unclassified	Unclassified	Unclassified	SAR

DOCUMENT REVISION RECORD
DOCUMENT NO. 91-R-1511

REVISION AND DATE	DESCRIPTION OF CHANGE/ REVISION AND PAGES AFFECTED	EFFECTIVITY
Original 8/27/91		8/27/91

0434 REV A (3/81)

TABLE OF CONTENTS

Section		Page
1.0	INTRODUCTION	1-1
1.1	Scope	1-1
1.2	Objective	1-1
1.3	Summary	1-1
2.0	LAUNCH VEHICLE SURVEY	2-1
3.0	SMALL SATELLITE SURVEY	3-1
3.1	Introduction and Summary	3-1
3.2	Small Satellite Survey	3-1
3.3	Small Satellite Driven SUS Requirements	3-4
4.0	SMALL UPPER STAGE SPECIFICATION	4-1
5.0	DESIGN APPROACH	5-1
5.1	Structure	5-1
5.2	Separation System	5-12
5.3	Propulsion System	5-12
5.4	Command & Control	5-19
5.5	Attitude Control	5-22
5.6	Electrical Power	5-25
6.0	ANALYSIS	6-1
6.1	Performance Analysis	6-1
6.2	Structural Analysis	6-11
6.3	Thermal Analysis	6-21
6.4	Reliability	6-32
7.0	TEST PLAN	7-1
8.0	MISSION OVERVIEW/SYSTEM ENHANCEMENTS	8-1

APPENDIX A — Component Specification, RRC CS-0252
Interface Control Drawing – SUS

APPENDIX B — Final Report Certification

APPENDIX C — SUS Recurring Price Estimate

LIST OF FIGURES

Figure		Page
1-1	Baseline SUS Design and Performance Summary	1-3
1-2	SUS Subsystem Overview	1-4
2-1	Existing and Near Term Launch Vehicles	2-2
2-2	Launch Vehicle Flight Random Vibration	2-3
2-3	Launch Vehicle Acceleration	2-3
2-4	Launch Vehicle Shock Environment	2-4
2-5	Launch Vehicle Sound Pressure Levels	2-4
3-1	Small Satellite Survey Structure	3-2
3-2	Distribution of SMALLSAT Quantities	3-5
3-3A	Altitude Vs % of Smallsat Initiatives	3-6
3-3B	Altitude (<800 nm) Vs % of Smallsat Initiatives	3-6
3-4A	Mass Vs % of Smallsat Initiatives	3-7
3-4B	Inclination Vs % of Smallsat Initiatives	3-7
3-5A	Dia Vs % of Smallsat Initiatives	3-8
3-5B	Length Vs % of Smallsat Initiatives	3-8
3-6	SUS Transfer Capability	3-10
5-1	Baseline SUS Design and Performance Summary	5-2
5-2	SUS Subsystem Overview	5-3
5-3	Top Assembly – SUS	5-4
5-4	Manufacturing Methods – SUS Final Assembly	5-5
5-5	Forward Cylinder Assembly Complete	5-6
5-6	Aft Cylinder Assembly Complete	5-8
5-7	Structure – Section Through Primary Structure	5-9
5-8	Cylinder Assembly – Aft	5-10
5-9	Structure – Sections Through Primary Structure	5-11
5-10	Separation	5-13
5-11	Separation – Nominal Actuation	5-14
5-12	Separation – Detail of Bolt Cutter/Manacle Ring Assembly	5-15
5-13	Separation System – Section Through Separation Interface	5-16
5-14	SUS Propulsion System Schematic	5-18
5-15	Command and Control Subsystem – Functional Description	5-20
5-16	Electronics Control Unit I (ECU)	5-21
5-17	ACS Block Diagram	5-23
5-18	IGS Functional Block Diagram	5-24

LIST OF FIGURES (Concluded)

Figure		Page
6-1	ARR Schematic	6-2
6-2	NCS Performance Parameters	6-3
6-3	Slug Mass Model and Liquid Damping Estimate	6-4
6-4	Slosh Mass Model and Mechanical Equivalent	6-4
6-5	Separation System Assembly	6-6
6-6	NCS Nutation Angle	6-7
6-7	TAS Analysis Results	6-9
6-8	Propellant Response to Thrust Misalignment, Attitude/Time	6-9
6-9	Propellant Response to Thrust Misalignment, Propellant Orientation/Time	6-9
6-10	SUS Propulsion System Schematic	6-12
6-11	SUS Preliminary System Level Structural Analysis Model	6-14
6-12	SUS Preliminary System Level Limit Load Margins of Safety	6-15
6-13	SUS Maximum Payload Deflections	6-17
6-14	SUS Preliminary System Level Buckling Analysis	6-18
6-15	SUS Preliminary System Level Natural Frequency Analysis	6-19
6-16	SUS Component Level Random Vibration	6-20
6-17	SUS Thermal Model (Exterior View)	6-25
6-18	SUS Thermal Model (Interior View)	6-26
6-19	SUS Component Temperatures (Liquid Propellant System)	6-28
6-20	SUS Component Temperatures (Battery & Electronic Components)	6-29
6-21	SUS Component Temperatures (Liquid Propellant System)	6-30
6-22	SUS Component Temperatures (Battery & Electronic Components)	6-31
6-23	SUS Reliability Model	6-33
7-1	SUS Program Test Plan	7-2
7-2	Attitude Control Subsystem (ACS) Development	7-3
7-3	Command and Control Subsystem Development	7-4
7-4	Power Subsystem Development	7-5
7-5	Separation Subsystem Tests	7-6
7-6	Development System Test Flow Plan	7-7
7-7	SUS Qualification	7-8
8-1	SUS Mission Capabilities	8-2
8-2	SUS Hohmann Transfer Operation Sequence	8-3
8-3	SUS Mission Event Sequence	8-4
8-4	L/V Command and Verification Interface	8-5

LIST OF TABLES

Table		Page
3-1	SMALLSAT Organizations	3-1
3-2	SMALLSATS Initiatives — Communications	3-3
3-3	A Typical Small Satellite Using Median Data	3-4
3-4	Small Satellite-Driven SUS Requirements	3-9
4-1	SUS Specification Requirements Summary	4-1
6-1	Spin-Stabilized Error Budgets	6-5
6-2	GN_2 Propellant Budget	6-7
6-3	TAS Preliminary Error Budget	6-10
6-4	TAS GN_2 Propellant Budget Summary	6-10
6-5	SUS Preliminary System Level Structural Analyses	6-13
6-6	SUS Thermal Design Summary	6-22
6-7	Thermal Design Objectives	6-23
6-8	Environmental and Operational Conditions	6-23
6-9	SUS Passive Thermal Design Features	6-24
6-10	SUS Thermal Design Conclusions	6-27
6-11	Computer Printout, Table Related Formulas, Reliability Block Failure Rate Data	6-35
6-12	SUS Reliability Block Data and Prediction	6-36

1.0 INTRODUCTION

1.1 SCOPE

This report summarizes the one-year study and design effort conducted by Rocket Research Company (RRC) under the Small Upper Stage (SUS) basic contract, in support of Naval Research Laboratory (NRL) contract number N00014-90-C-2309.

1.2 OBJECTIVE

The goal of this effort was to create a generic, low-cost propulsion stage capable of being integrated to several different launch vehicles (LV's) and capable of providing the mission enabling orbit transfer function to a variety of different small satellite missions.

The basic program consisted of two tasks. The purpose of Task 1 was to create a SUS specification and ICD based on the current LV capabilities and the orbital needs of the small satellite community. The purpose of Task 2 was to create the preliminary design and perform the preliminary analysis necessary to meet the requirements of the specification.

1.3 SUMMARY

Rocket Research Company has completed Tasks 1 and 2 of the basic SUS contract. This effort culminated in an SUS design that meets the objective stated in Section 1.2 above.

A survey was conducted to establish the current and near term LV capabilities and space vehicle environments. The following SUS specification requirements were established from the data gathered.

Characteristic	Requirement	Comments
Orbit Accuracy	$\Delta a \pm 20$ nm $\Delta i \pm .35$	From LV and Smallsat Information Combined
Envelope	41" Dia., 32" Long	
Environments		
Thermal	Launch & On-Orbit	See Paragraphs 3.2.5.2.1 and 3.2.5.3.1.
Vibration	Random, 9.6 grms	
Shock	9000 g's maximum	
Acoustic	149.8 dB Overall	
Acceleration	13 g's and Direction	
EMI / EMC	Approach Identified	

A small satellite survey was conducted which established the requirements listed below:

Characteristic	Requirement	Comments
Orbit Accuracy	$\Delta a \pm 20$ nm $\Delta i \pm .35$	From LV and Smallsat Information Combined
Orbit Transfer	27,000 lbm-sec Minimum Total Impulse	This can transfer 400 lbm from 100 nm to 500 nm

Based on the specification, the preliminary design of the SUS was developed in Task 2. A summary of the design and performance of the SUS is shown in Figure 1-1. The SUS is composed of 7 subsystem as shown in Figure 1-2. A summary of the SUS design is presented in Section 5.0.

The analysis to support the preliminary design included performance, structural, thermal and reliability. The performance analysis contained in Section 6.1 included control system selection, verified the control system stability requirements, established orbit error budgets and calculated GN_2 budget for the baseline mission. The structural analysis presented in Section 6.2 created a finite element model of the SUS and was utilized to verify the three items below.

1. The structural integrity of the design.
2. The components selected were capable of their estimated vibration levels.
3. The structural design is capable of a variety of payload weights and stiffnesses.

The thermal analysis, presented in Section 6.3, was performed to verify temperature control of the SUS. A thermal model was constructed and used to verify that the thermal design satisfies all specification requirements and is compatible with the performance and structural design requirements. The reliability prediction performed are presented in Section 6.4. The analysis shows that the SUS reliability exceeds the 0.95 requirement with a predicted reliability of 0.960.

The test plan presented in Section 7.0 outlines the proposed development, qualification and acceptance testing of the SUS consistent with the low cost SUS approach. The cost is minimized by maximizing the use of flight qualified components and by efficient use of RRC in-house test capabilities.

The successful completion of Tasks 1 and 2 has resulted in a low cost, generic propulsion stage design capable of being integrated onto several different LV's and capable of providing the orbit maneuvering requirements for more than 75 percent of the small satellite missions identified.

The total hours expended completing Tasks 1 and 2 (thru the Preliminary Design Review) was 9101 hours. Appendix B contains certification of the hours expended and a breakdown by labor categories.

The production cost of the baseline three-axis control SUS was estimated to be $555,967 for a lot size of ten. Using a 90 percent learning curve and a production lot size of 3, the estimated unit cost was $638,098. Appendix C contains a breakdown of a 10-unit recurring price estimate in 1991 dollars.

Baseline SUS Design and Performance Summary

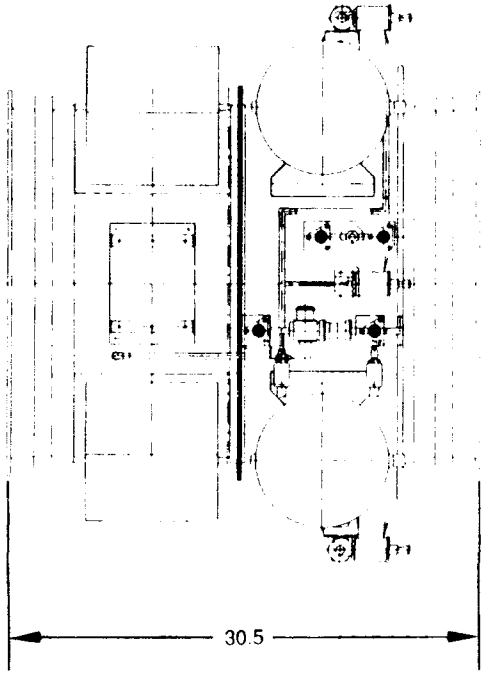

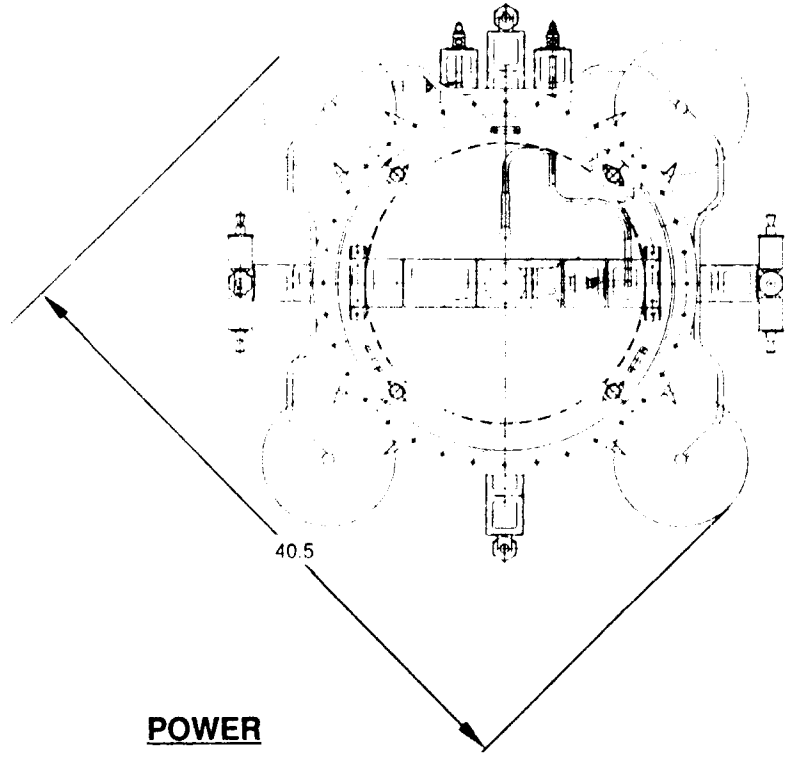

MISSION:

LOW EARTH ORBIT TRANSFER

LIFE:

1 hr ON ORBIT (CONSUMABLES LIMIT)

MASS:

SUS BOL	300 LBS
SUS EOL	120 LBS
PAYLOAD (MAX)	700 LBS

POWER

8 amp-hr, 28+/-6Vdc SILVER ZINC BATTERY

ATTITUDE CONTROL:

3 AXIS STABILIZED
GN_2 ACS THRUSTERS (8)
REORIENTATION CABABILITY
PAYLOAD SPIN-UP AND/OR ORIENTATION PRIOR TO SEPARATION
IGS ALIGNMENT – STORED STATE VECTOR

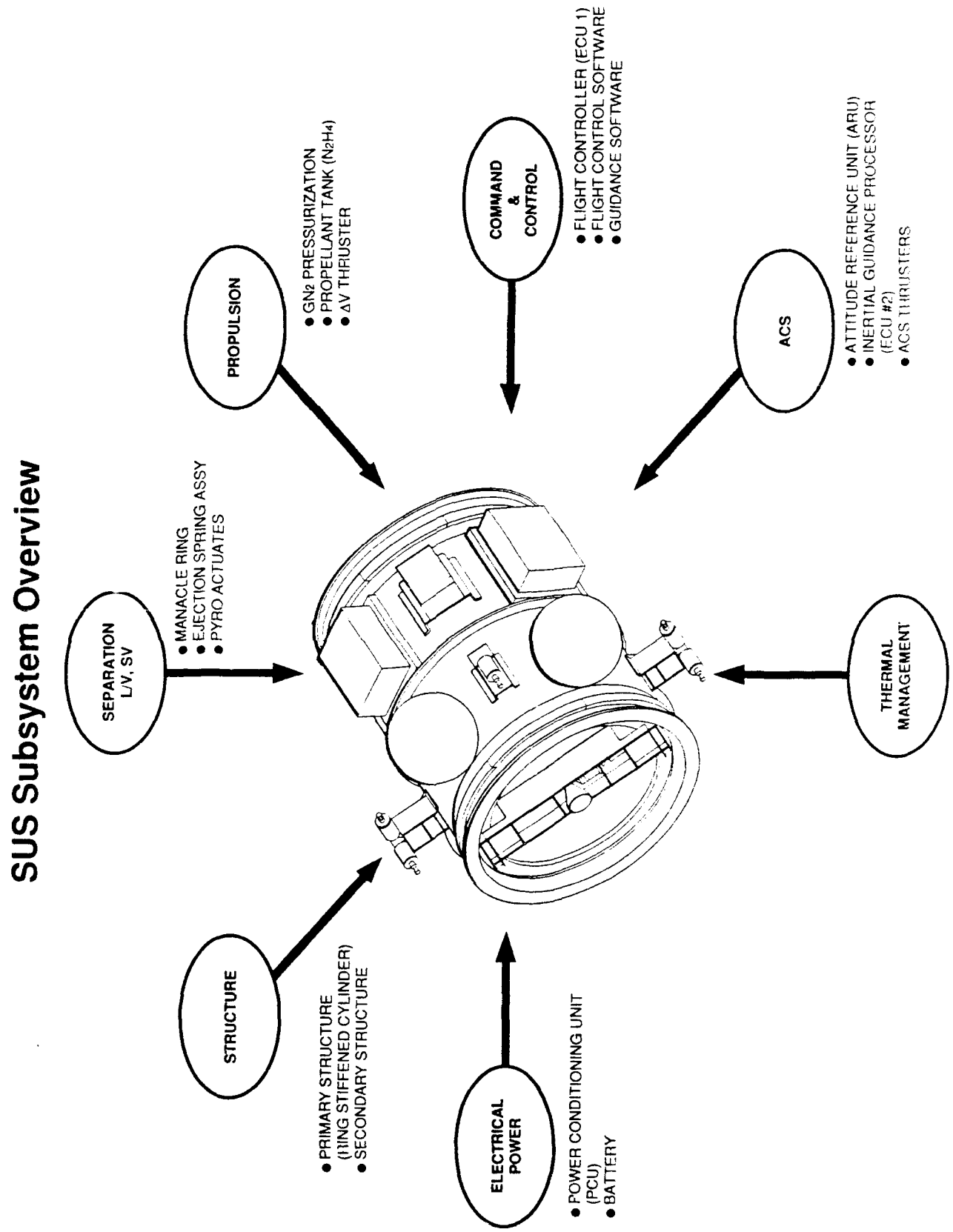
SUS Subsystem Overview
SEPARATION L/V, SV
• MANACLE RING
• EJECTION SPRING ASSY
• PYRO ACTUATES
PROPULSION
• GN2 PRESSURIZATION
• PROPELLANT TANK (N2H4)
• ΔV THRUSTER
COMMAND & CONTROL
• FLIGHT CONTROLLER (ECU 1)
• FLIGHT CONTROL SOFTWARE
• GUIDANCE SOFTWARE
ACS
• ATTITUDE REFERENCE UNIT (ARU)
• INERTIAL GUIDANCE PROCESSOR (ECU #2)
• ACS THRUSTERS
THERMAL MANAGEMENT
STRUCTURE
• PRIMARY STRUCTURE (RING STIFFENED CYLINDER)
• SECONDARY STRUCTURE
ELECTRICAL POWER
• POWER CONDITIONING UNIT (PCU)
• BATTERY

Figure 1-2

2.0 LAUNCH VEHICLE SURVEY

To establish the launch vehicle portion of the SUS specification, a launch vehicle survey was conducted and the appropriate environmental requirements assembled. These requirements were then enveloped by the SUS specification requirements. From the currently available U. S. launch vehicles users guide (Figure 2-1), the various structural and thermal environments were determined and the SUS requirements were established which encompass all of the published data. This was done such that the SUS could be flown on any of the launch vehicles. Figures 2-2, 2-3, 2-4, and 2-5 show the structural requirements of random vibration, static acceleration, shock and acoustics, respectively. In addition, the maximum radiative heat flux and the free molecular heat flux were determined to be 330 Btu/hr-ft^2 (for three minutes) and 360 Btu/hr-ft^2 (decaying to zero in two minutes), respectively.

In addition to the SUS environments, this launch vehicle survey proved to be valuable on helping determine other SUS requirements which are listed as follows:

- Maximum envelope of 41-in. Dia x 32-in. long – which allows the SUS to fly as a secondary payload on Titan II and Titan IV.
- Starting orbital accuracy of ±5 nm altitude and ±0.15° inclination - which allows for a determination of the SUS accuracy budget.
- The SUS must carry a stored state vector - since the launch vehicles currently do not have available a data bus interface to the payload which can transfer this state vector information.

The launch vehicle survey also established the fact that the most viable boosters for SUS are limited to Titan II, Titan IV, Delta II and Atlas II. The primary reasons for the potential limited use on the other launch vehicles are listed below:

Scout — Future availability, fairing size
Pegasus — HAPS 4th stage already deployed
Atlas E — Future availability
Titan III — Future availability
STS — Cost of man rating, lack of polar orbits

Existing and Near Term Launch Vehicles

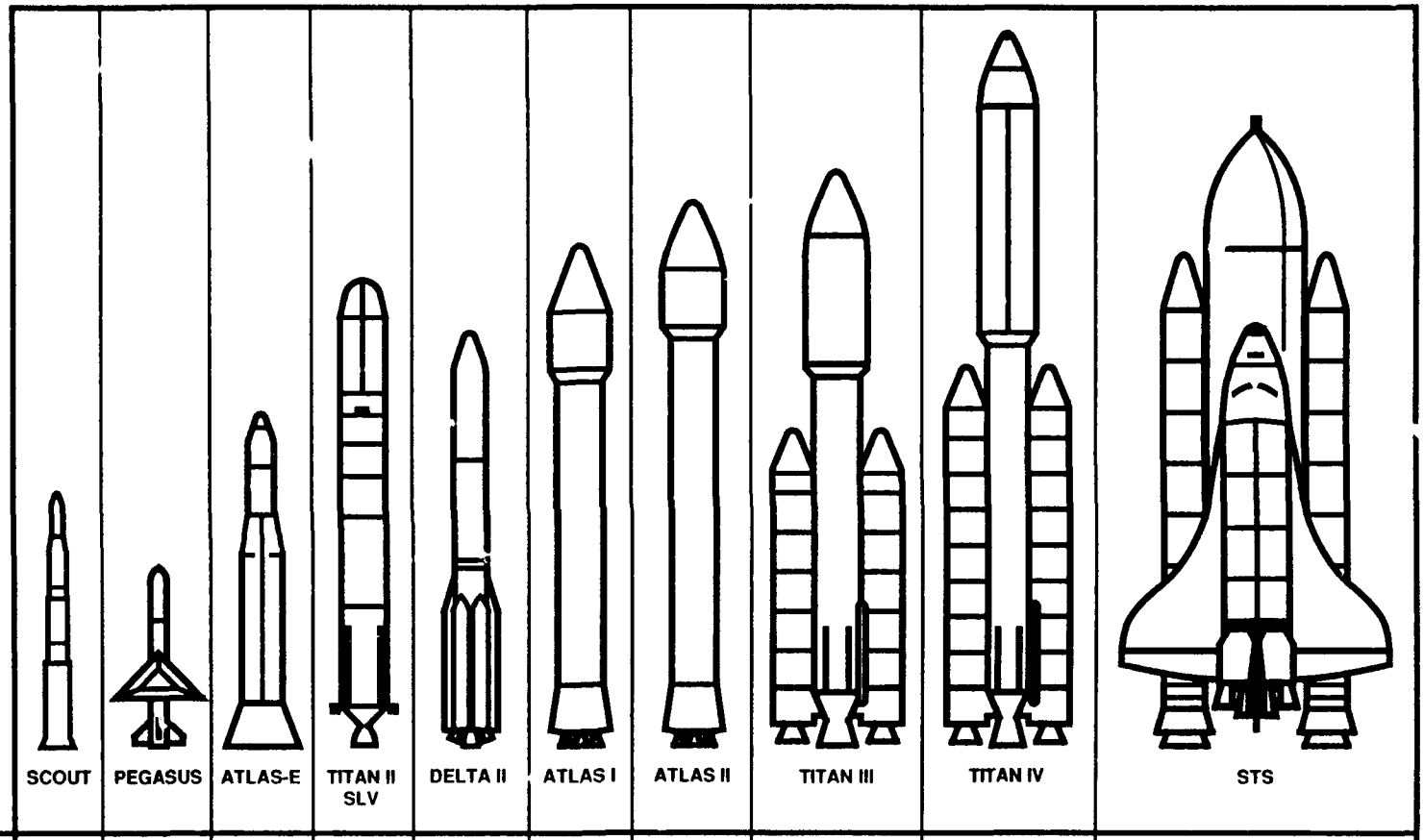

	SCOUT	PEGASUS	ATLAS-E	TITAN II SLV	DELTA II	ATLAS I	ATLAS II	TITAN III	TITAN IV	STS
CONFIGURATIONS	—	—	—	—	7920 7925	—	II, IIA, IIAS	—	IUS, CENTAUR, NUS	—
PRIME CONTRACTOR	LTV	OSC	GD	MMC	MDSSC	GD	GD	MMC	MMC	ROCKWELL
AVAILABILITY	3 EACH FOR SALE	CURRENT	2 FOR SALE	CURRENT ~ 41 EACH	CURRENT	CURRENT	CURRENT (IIAS 1st FLIGHT 93)	NONE	CURRENT	—

Figure 2-1

C11225-88

LAUNCH VEHICLE FLIGHT RANDOM VIBRATION

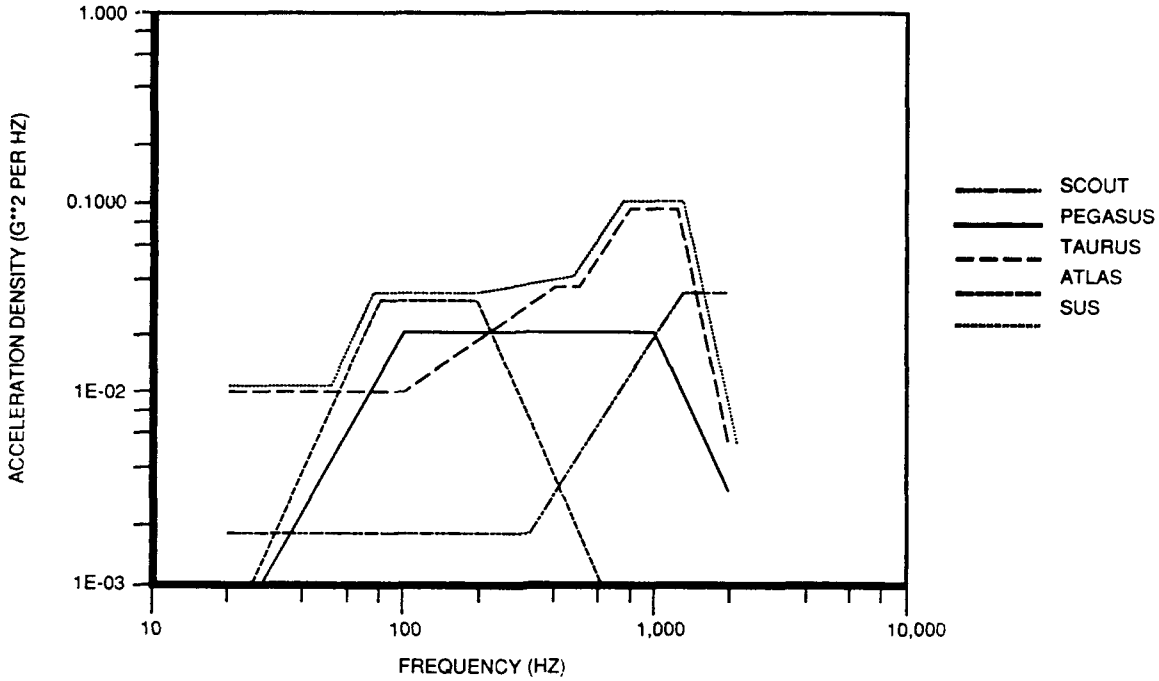

C11231-43

Figure 2-2

LAUNCH VEHICLE ACCELERATION

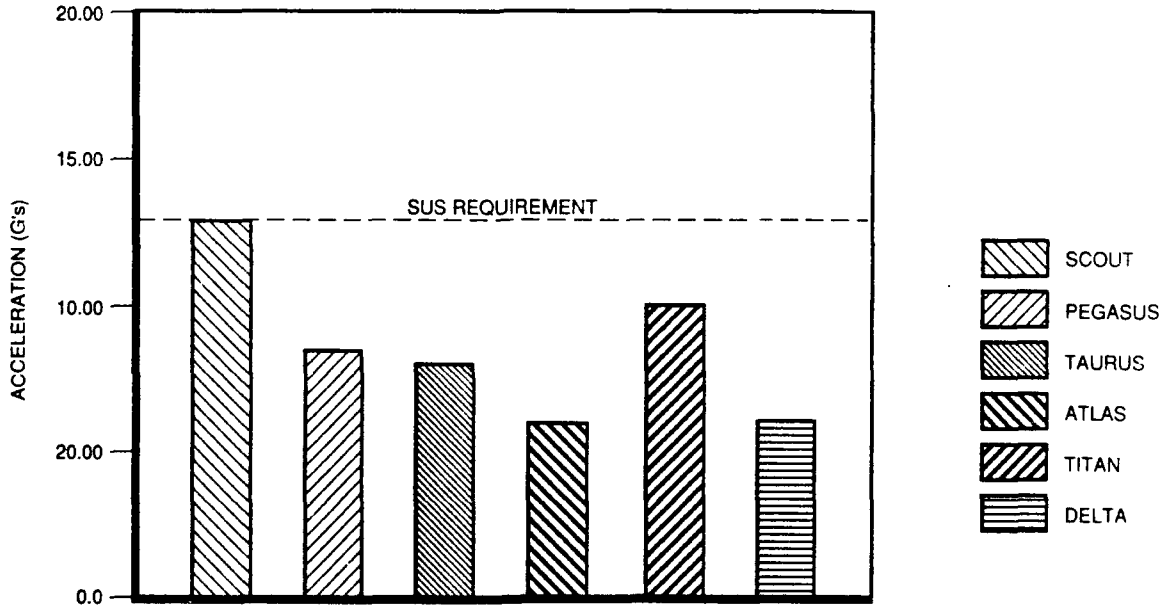

C11231-44

Figure 2-3

LAUNCH VEHICLE SHOCK ENVIRONMENT

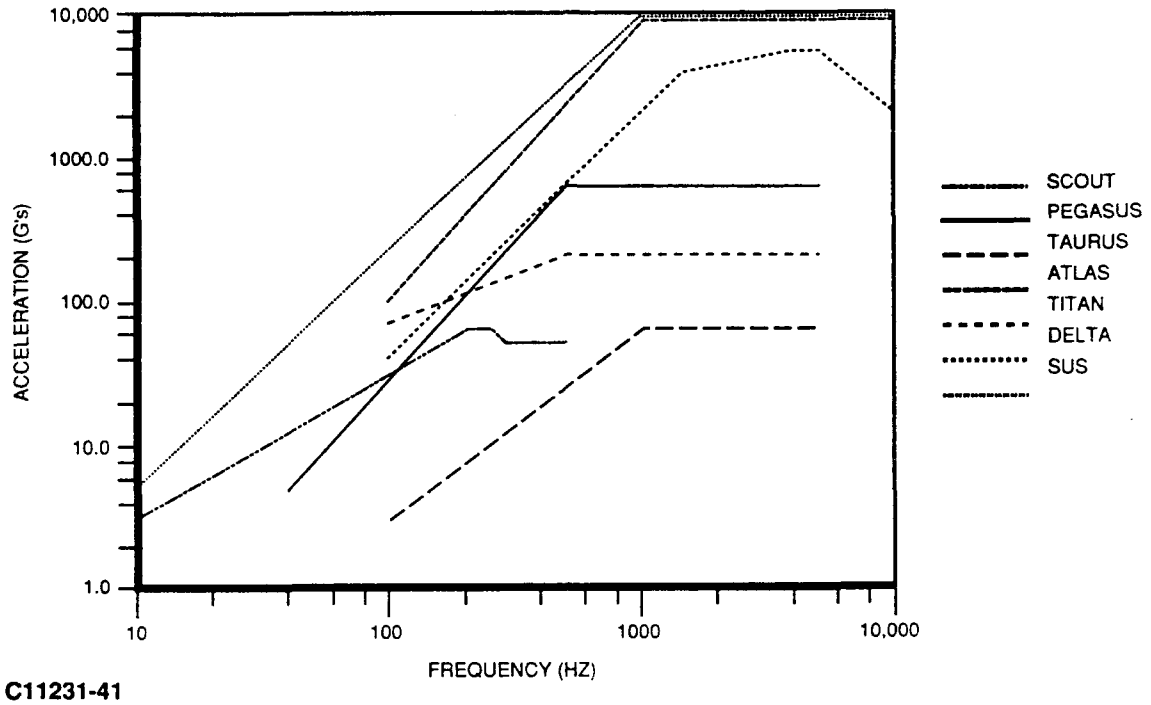

C11231-41

Figure 2-4

LAUNCH VEHICLE SOUND PRESSURE LEVELS

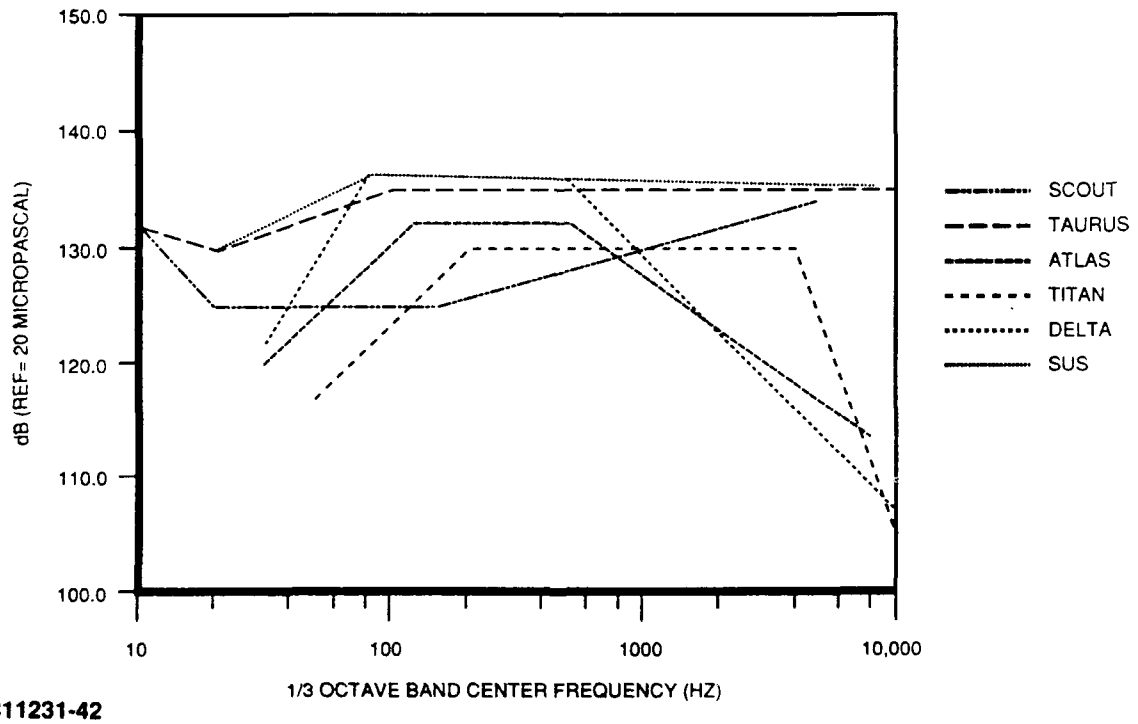

C11231-42

Figure 2-5

3.0 SMALL SATELLITE SURVEY

3.1 INTRODUCTION AND SUMMARY

The small satellite requirement portion of the SUS specification was established by conducting a small satellite survey, establishment of a small satellite data base, and then enveloping appropriat ›ortions of the data base with chosen parameters for the SUS specification. The primary areas of interest for the small satellite portion of the SUS requirements are mass and orbit altitude, since these parameters (along with the SUS dry weight) define the fuel requirements of an orbit maneuver via the rocket equation. Other areas of interest which were included in the data base are parameters such as tne m.:ssion type, length, diameter and desired inclination angle.

The SUS preliminary design as defined in Section 5.0 of this document, in fact, envelopes the total impulse requirements of more than 75 percent of the small satellite missions identified.

3.2 SMALL SATELLITE SURVEY

In order to conduct the small satellite survey, ground rules were established that a small satellite, for the purposes of this survey, weighs less than 1000 lbm, is earth orbiting and is dedicated to a U.S. mission. Also established were four mission categories for the small satellites survey as follows:

1) Navigation (NAV)
2) Remote Sensing (REMSEN)
3) Scientific (SCIE)
4) Communications (COMM)

The small satellite survey included both small satellite initiatives and launched small satellites. Launched small satellites were included in the data base since the quantity of identified small satellite initiatives is limited and the small satellite history will reinforce the SUS requirements established for the initiatives. With the combination of mission categories and initiative versus launched small satellites, a small satellite survey structure was established which is shown in Figure 3-1.

The small satellite initiative survey was conducted by contacting the small satellite organizations (both users and builders) shown in Table 3-1. This established a data base of program initiatives, along with appropriate performance information. A sample of the initiative survey is shown in Table 3-2.

Table 3-1
SMALLSAT ORGANIZATIONS

Aero-Astro	CASP	Globesat	MMC	Rockwell
Aerospace	Comnetics	Hughes	Motorola	Sandia
Afrispace	DARPA	Intraspace	NASA Goddard	Space Industries
AFSSD	DSI	John Hopkins APL	NASA HQS	Space Services
American	Fairchild	JPL	NASA Marshall	Sparta
Microsat	GD	LANL	NAVY POST	Spectrum Research
Ardak	GE ASD	LMSC	GRAD	TRW
Ball	GE Government	Loral	NRL	Utah State
Boeing	Services	MDAC	OSC	Weber State

Small Satellite Survey Structure

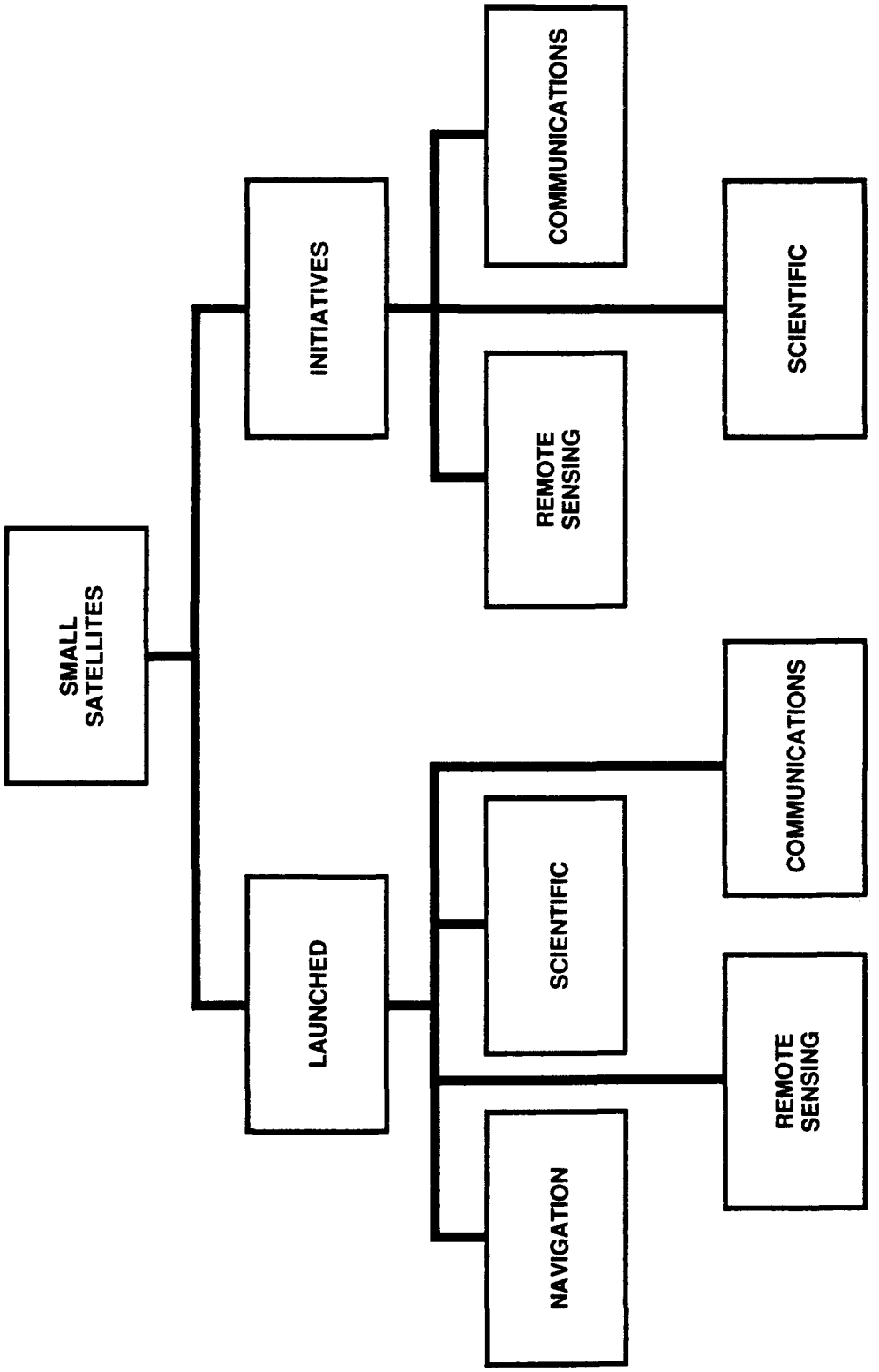

Figure 3-1

C11231-55

Table 3-2
SMALLSATS INITIATIVES — COMMUNICATIONS

NAME	CONTRACTOR	SPONSOR	MISSION	WT(LB)	D(IN)	L (IN)	APO(NM)	PER(NM)	ALT(NM)	INC(DEG)	PROP	VEHICLE	ELD	COMMENTS
MICROSAT (7 EA)	DSI	DARPA	COMM	50	?	?	400	400	400	82.00	YES	PEGASUS	1991	IN FAB, GAS PROP
ISES	DSI	USAF	COMM	180	?	?	400	400	400	90.00	NO	PEGASUS	1991	
PROFILE	ARDAK	NAVY	COMM	180	?	?	300	300	300	76.00	NO	SCOUT	1991	
IRIDIUM (77 EA)	MOTOROLA/TBD	MOTOROLA	COMM	700	39	79	413	413	413	90.00	YES	TBD	1995	CONSTELLATION
MILCOMSATS	HUGHES	USAF	COMM	150	?	?	19323	19323	19,323	0.00	?	PEGASUS	?	STUDY
MSS	GE ASD	DARPA	COMM	199	?	?	448	365	407	69.00	?	?	?	STUDY
PANSAT	NAVY P. G.	NAVY P. G.	COMM	150	19	17	300	300	300	60.00	NO	?	1993	STUDY
UOSAT D&E	SURREY	U OF SURR.	COMM	?	?	?	?	?	?	?	?	ARIANE	?	IN FAB
UNISYS	GLOBESAT	?	COMM	167	?	?	?	?	?	?	?	AMROC	?	WAITING LAUNCH
ORIN	NAVY POST GR.	?	COMM	250	?	?	162	162	162	?	?	?	?	WORK STOPPED
AMSTAR	WEBER STATE	WEBER S.	COMM	551	?	?	19323	19323	19,323	0.00	?	?	?	
UOSAT	SURREY	U OF SURR.	COMM	150	?	?	270	270	270	?	?	?	?	
MAILSTAR	SWEDEN SPACE	?	COMM	271	?	?	444	444	444	87.00	?	?	?	
BGS-100	BALL	?	COMM	771	?	?	19323	19323	19,323	0.00	?	?	?	
BGS-400	BALL	?	COMM	?	?	?	19323	19323	19,323	0.00	?	?	?	
BSS	BALL	?	COMM	381	?	?	216	216	216	?	?	?	?	
GASSAT (XSAT)	DSI	NASA	COMM	60	20	20	176	176	176	43.00	NO	STS	TBD	

The data base for launched small satellites was established based on select information from the TRW space log. The launched small satellite data base included all U.S., earth orbiting, satellites weighing less than 1000 lbm.

Figure 3-2 shows the quantity distribution of the initiatives versus launched small satellites along with the quantity distribution of missions for each category.

3.3 SMALL SATELLITE DRIVEN SUS REQUIREMENTS

With the computerized small satellite data base now established, it is a simple matter to evaluate the parameters needed to establish the SUS requirements. Of primary interest are the parameters of satellite mass and orbit altitude since, via the rocket equation, these parameters will define fuel mass. General interest parameters of inclination angle, diameter and length will be used for design guidance.

Figure 3-3 shows a plot of orbit altitude as a function of percent of the small satellite initiatives. It is clear from Figure 3-3A that more than 80 percent of the identified initiatives will be LEO missions. There was one mission in GTO and a few in GEO. Referring to Figure 3-3B, which shows LEO orbit altitude (<800 nm) as a function of percent of small satellite initiatives, it can be seen that selecting the orbit altitude of 500 nm will envelope all of the LEO small satellite initiatives. Therefore, it seems reasonable that SUS should have the total impulse capabilities to provide a Hohmann transfer from 100 nm to 500 nm.

The other parameter of primary interest is small satellite mass. Figure 3-4A plots the mass of the small satellite initiatives as a function of the percent of the initiatives. Note that this plot's slope takes on a significant increase above 400 lbm. Therefore, it seems reasonable to chose 400 lbm as the small satellite maximum mass, since this mass envelopes approximately 75 percent of the small satellite initiatives. The general interest parameters of inclination angle, diameter and length are shown in similar plots on Figure 3-4B, 3-5A and 3-5B, respectively.

As in the small satellite initiatives, similar plots were generated for the already launched small satellite data base. A summary of initiative versus launched small satellite median data is shown in Table 3-3.

Table 3-3
A TYPICAL SMALL SATELLITE USING MEDIAN DATA

	Initiative	Launched
Altitude *	380 nm	430 nm
Mass	260 lbm	150 lbm
Inclination	82°	82°
Median Diameter	23 inches	24 inches
Median Length	29 inches	27 inches

* Median point for small satellites in LEO (< 800 nm).

DISTRIBUTION OF SMALLSAT QUANTITIES

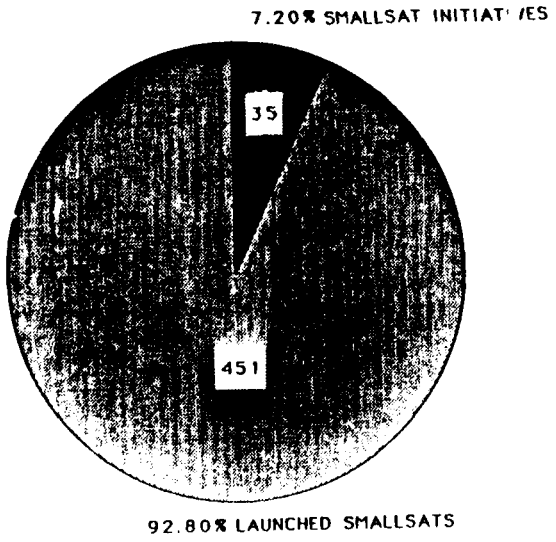

SMALLSAT INITIATIVE MISSION DISTRIBUTION

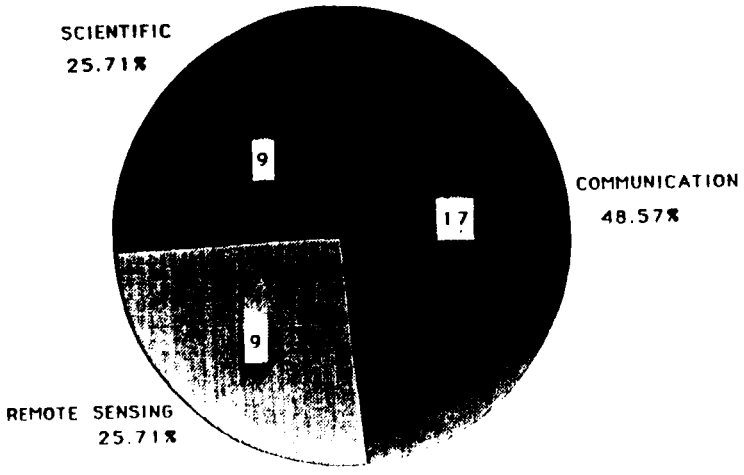

LAUNCHED SMALLSAT MISSION DISTRIBUTION

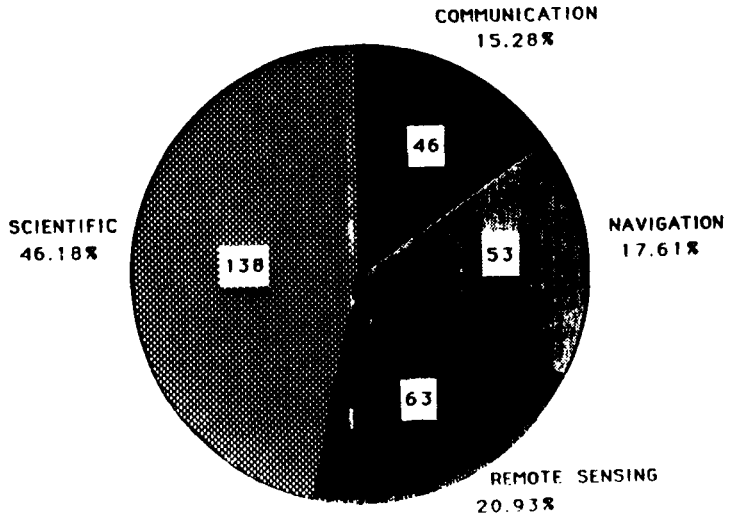

Figure 3-2

ALTITUDE VS % OF SMALLSAT INITIATIVES

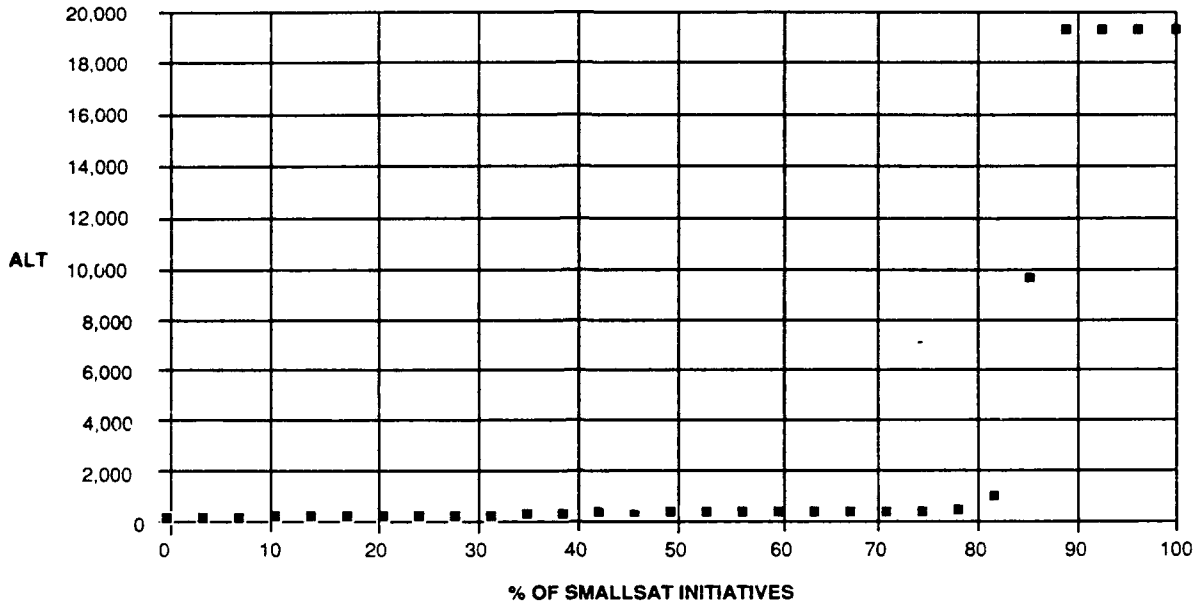

Figure 3-3A

ALTITUDE (<800 NM) VS % OF SMALLSAT INITIATIVES

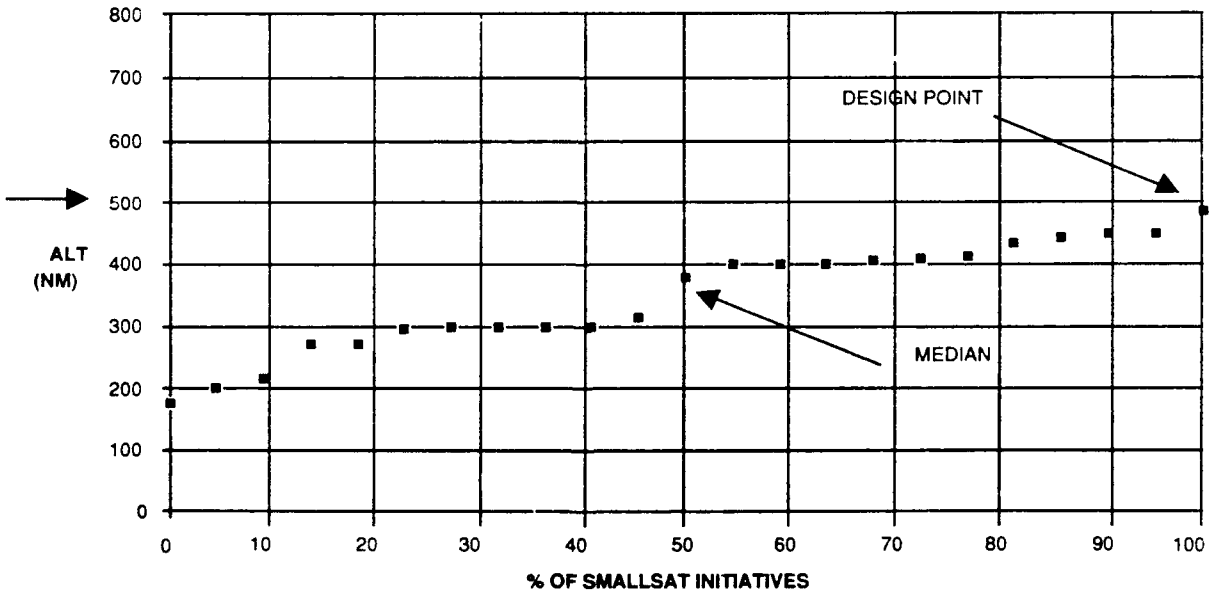

Figure 3-3B

MASS VS % OF SMALLSAT INITIATIVES

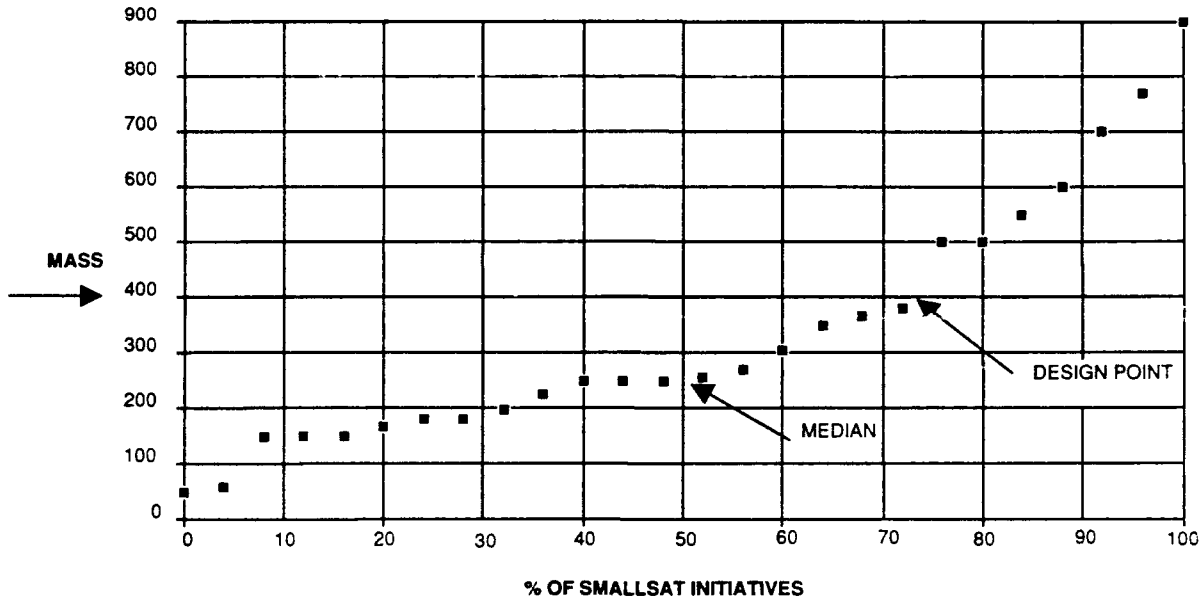

Figure 3-4A

INCLINATION VS % OF SMALLSAT INITIATIVES

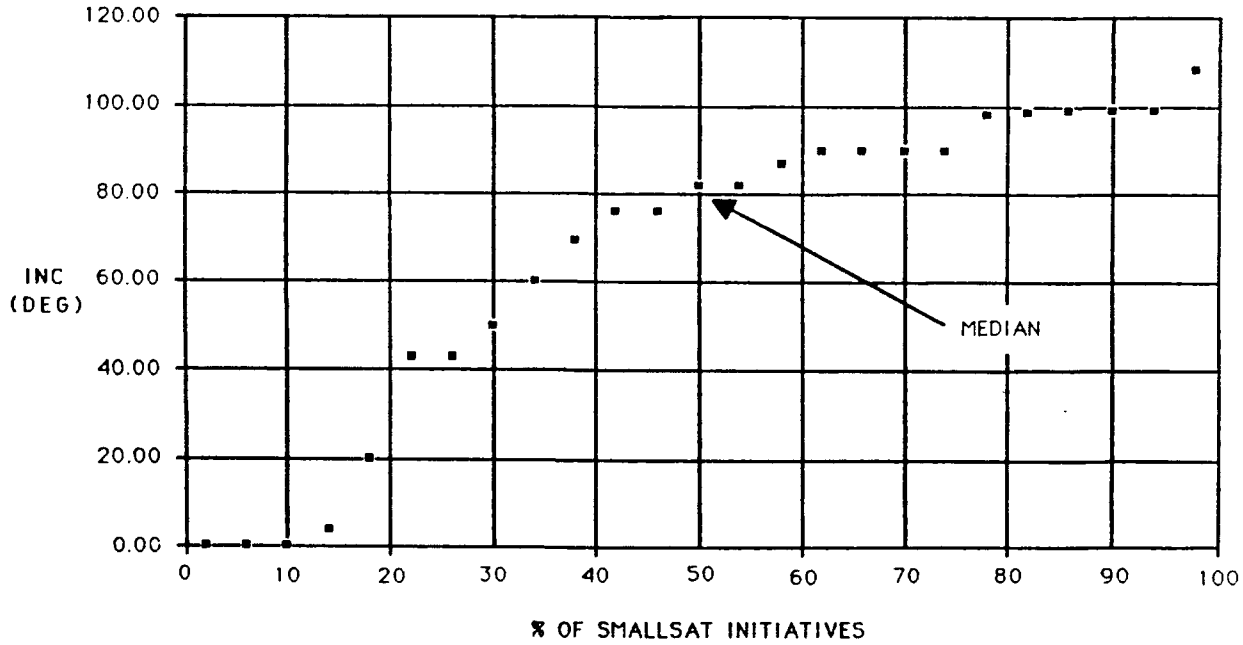

Figure 3-4B

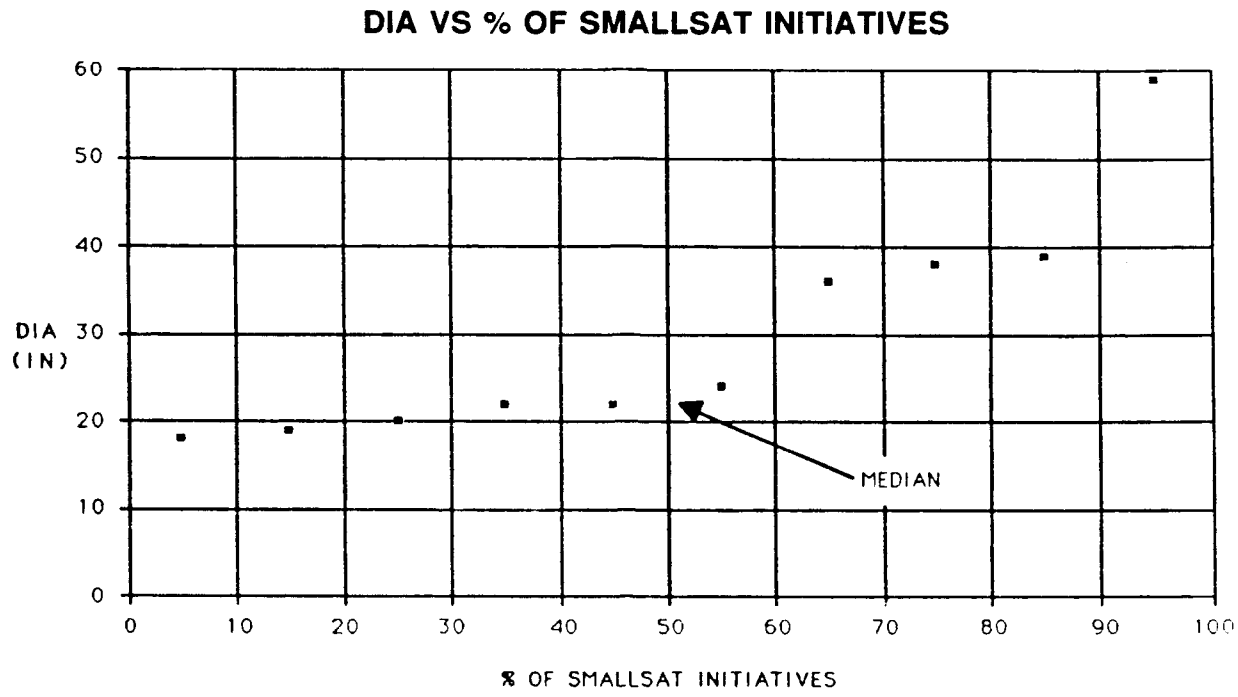

Figure 3-5A

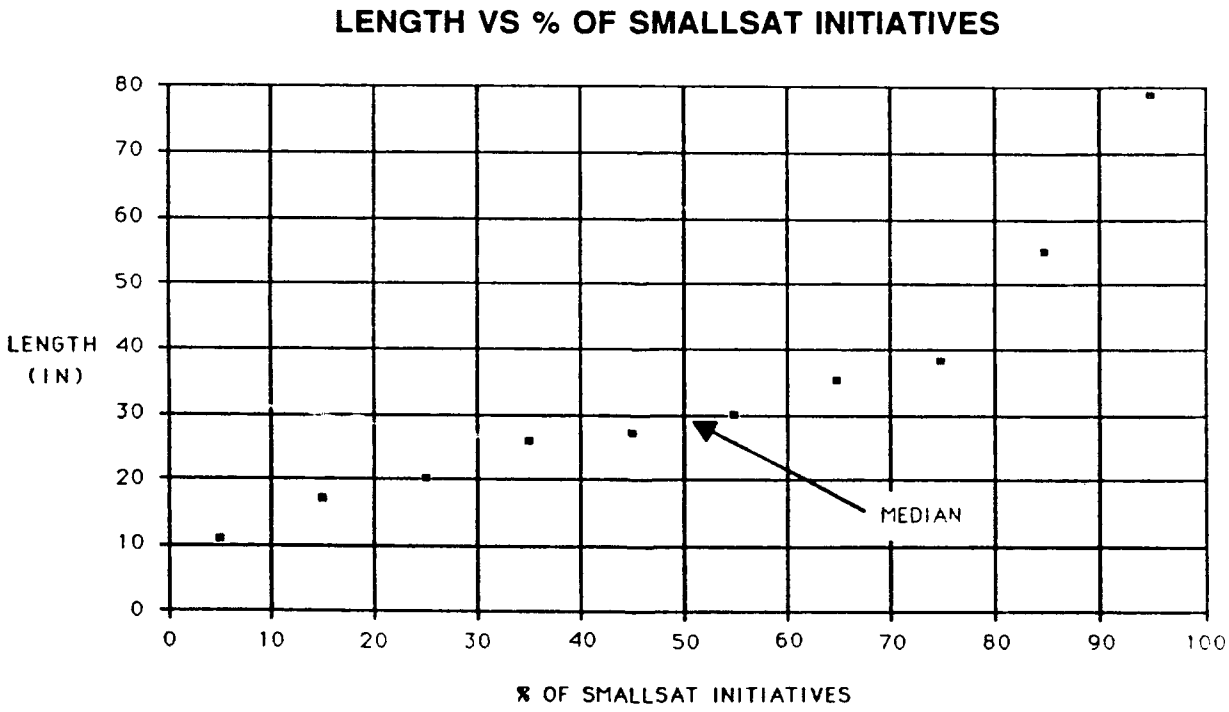

Figure 3-5B

This data shows the only significant change in data between the initiatives and the history is in the parameter of mass, which makes sense because of the development of more capable space boosters over the 33 year history of U.S. spaceflight.

Table 3-4 summarizes the chosen parameters of mass and altitude for SUS capabilities along with the percent of data base incorporated from both the initiatives and the historical data bases.

Table 3-4
SMALL SATELLITE-DRIVEN SUS REQUIREMENTS

	Amount	Small Satellite Initiative Incorporation	Launched Small Satellite Incorporation
Altitude	500 nm	100% of LEO (< 800 nm)	70 % of LEO (< 800 nm)
Mass	400 lbm	75% of All	78% of All

The minimum total impulse specification requirement of the SUS is now defined. (Sufficient ΔV capabilities to perform a Hohmann transfer from 100 nm to 500 nm for a 400 lbm satellite.) With this specification requirement the SUS fuel carrying capabilities can now be defined. Referring to Figure 3-6 and selecting the parameters 500 nm along with a 400 lbm satellite, the minimum SUS fuel load is approximately 120 lbm of hydrazine (I_{sp} ~0 225 sec). Of course, in order to generate this parametric plot of the rocket equation, the SUS dry mass must be known. Therefore, Figure 3-6 is the result of an iterative process using the dry mass of the final SUS design.

As will be noted in the design and structural analysis section later, the resultant SUS design has the ability to carry approximately 170 lbm of fuel which is sufficient to carry a 700 lbm satellite from 100 nm to sun synchronous orbits. Structurally, the SUS design still has sufficiently positive margins of safety for up to 700 lbm. Therefore, the basic SUS design is much more capable than the minimum specification requirements.

The other primary area of interest in small satellite requirements is final orbit accuracy. The small satellite and user communities had difficulty in defining these parameters. The parameters of apogee ±25 nm, perigee ±25 nm and inclination angle ±0.5° were selected for the SUS specification which appeared to envelope most requirements (±0.5° is arguable for sun synchronous orbits). In fact, as Section 6.1 will point out, the basic SUS design has estimated accuracy capabilities which are approximately an order of magnitude better than the above tolerances.

With the small satellite portion of the SUS requirement now defined, the SUS specification (Section 4.0) was created.

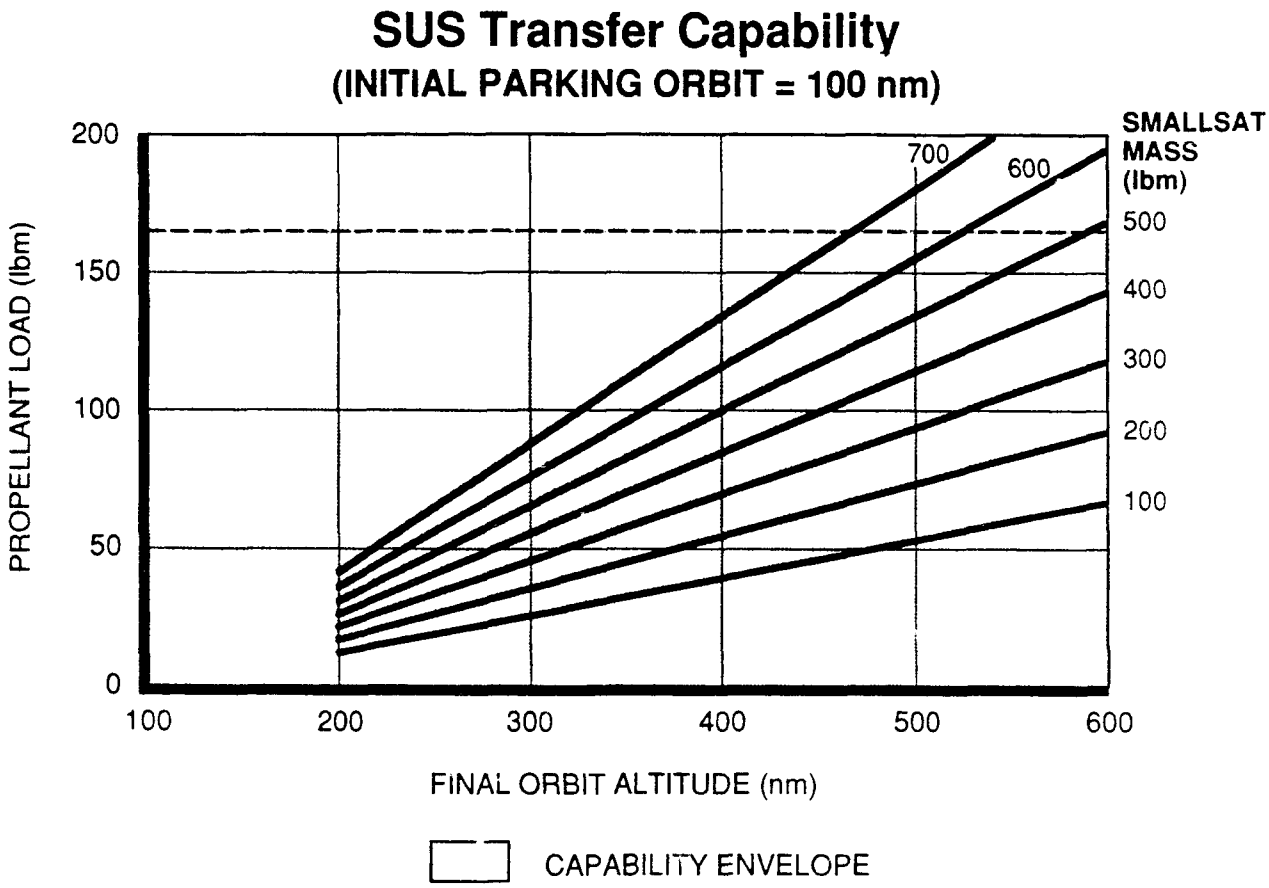
SUS Transfer Capability
(INITIAL PARKING ORBIT = 100 nm)
PROPELLANT LOAD (lbm)
200
150
100
50
0
100
200
300
400
500
600
FINAL ORBIT ALTITUDE (nm)
SMALLSAT MASS (lbm)
700
600
500
400
300
200
100
CAPABILITY ENVELOPE

4.0 SMALL UPPER STAGE SPECIFICATION

Based on the data obtained in the launch vehicle and small satellite surveys, the SUS prime item development specification (RRC CS-0252, see Appendix A) was written in accordance with the specification practices of MIL-STD-490. A summary of survey-driven specification requirements is shown in Table 4-1.

The remainder of the specification requirements were established from the contractual compliance and guidance documents, appropriately tailored to meet the SUS objectives. The key documents are listed below.

MIL-HDBK-343 Design, Construction, and Testing Requirements For One of a Kind Space Equipment

MIL-HDBK-340 Application Guidelines for MIL-STD-1540B: Test Requirements for Space Launch Vehicles

MIL-STD-1540B Test Requirements for Space Vehicles

Table 4-1
SUS SPECIFICATION REQUIREMENTS SUMMARY

Characteristic	SUS Specification Requirement
Orbit accuracy	Apogee and perigee ±20 nm* Inclination ±0.35°*
PLF envelope	41-in. diameter, 32-in. length
Thermal environment Launch	60 – 80°F until liftoff 330 Btu/hr-ft^2, 3 minutes 360 Btu/hr-ft^2, decays to zero in 2 minutes Maximum flux Solar flux = 450 Btu/hr-ft^2 ALBEDO = 0.32 earth reflectance Earth IR = 80 Btu/hr-ft^2 Minimum flux – zero flux from sun and earth
Vibration environment	9.6 g rms
Shock environment	9,000 g's max
Acoustic environment	149.8 dB overall
Acceleration Environment	13 g's any direction
EMI / EMC	Approach identified
Orbit transfer	Hohmann transfer - 100 to 500 nm
Satellite weight	400 lbm

*From LV release point

5.0 DESIGN APPROACH

Design Introduction

The primary design guideline which dictated SUS configuration and subsystem component selection was the desire to produce an extremely low-cost vehicle at the sacrifice of weight and design efficiency. To meet the aggressive cost goals established for this program, particular attention was paid to component selection in terms of cost vs reliability. By tailoring individual component qualification levels based on component criticality and overall mission probability of success (Ps), optimumal subsystem costs were obtained. Component selection was limited to flight proven hardware available on a stock order release basis thereby reducing or eliminating altogether nonrecurring costs and insuring continued supply at predictable prices.

Baseline Design Description

The SUS vehicle as configured is a generic upper stage capable of performing a variety of orbital maneuvers including orbit transfer, plane change, and circularization from an elliptical orbit. In addition to this mission profile flexibility, SUS also possess the required subsystem flexibility and computational capability to conform to various payload requirements which might include complex reorientation maneuvers or various ΔV thruster burn profiles. As configured, SUS incorporates a three axis attitude control system which through software control can be configured to address a wide variety of payload control requirements.

Pertinent SUS performance specification and envelope requirements are presented in Figure 5-1

The SUS design is divided into seven distinct sub-system categories as illustrated in Figure 5-2. These include structure, separation, propulsion, command & control, attitude control, and electrical power. A detailed discussion of these subsystems follows.

5.1 STRUCTURE

The SUS top assembly (Figure 5-3) is 30.460 inches long between the S/V and L/V interfaces (along the SUS primary axis which is the X-axis). In the Y-Z plane, the SUS fits within an envelope defined by a 41.00 inch diameter cylinder centered on the X-axis of the SUS coordinate system (see Figure 5-3). The SUS launch vehicle interface plane defines SUS Station 0.00. The satellite vehicle interface plane defines SUS station 30.460. The SUS top assembly is assembled from two major subassemblies: the forward cylinder assembly (SK 31480) and the aft cylinder assembly (SK 31479), as shown in Figure 5-4. The SUS top assembly, additionally, calls out final wire harness connections, any multi-layer insulation blankets to be installed, and the ΔV thruster optical alignment.

The forward cylinder assembly (SK 31480) is the SUS's avionics section, as shown in Figure 5-5. The forward cylinder assembly mates the forward cylinder assembly (SK 31478) with an interface ring assembly (SK 31482, which includes the interface ring, SK 31483 and four (4) spring ejection reaction fittings, SK 31510). The forward cylinder assembly is joined to the interface ring assembly using two (2) manacle ring assemblies (SK 31514) which are joined

Baseline SUS Design and Performance Summary

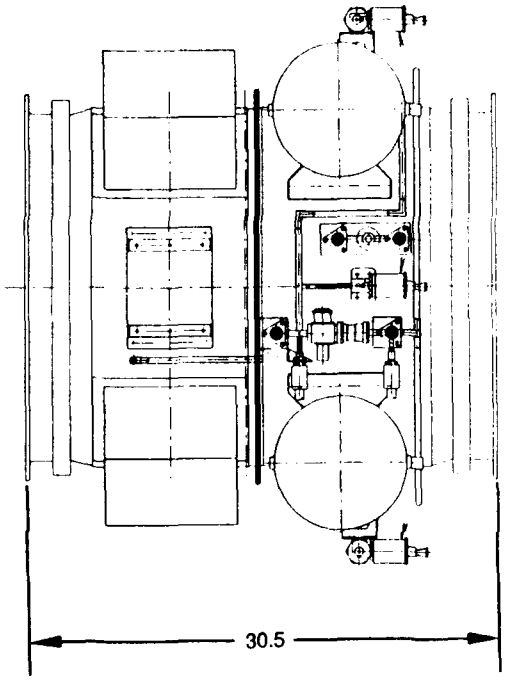

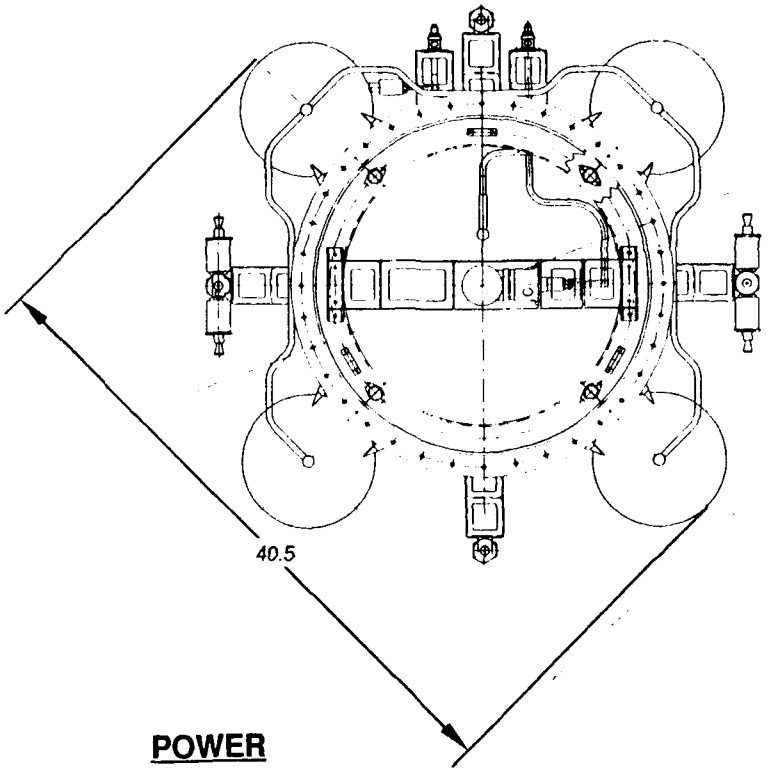

MISSION:

LOW EARTH ORBIT TRANSFER

LIFE:

1 hr ON ORBIT (CONSUMABLES LIMIT)

MASS:

SUS BOL	300 LBS
SUS EOL	120 LBS
PAYLOAD (MAX)	700 LBS

POWER

8 amp-hr, 28+/-6Vdc SILVER ZINC BATTERY

ATTITUDE CONTROL:

3 AXIS STABILIZED
GN_2 ACS THRUSTERS (8)
REORIENTATION CABABILITY
PAYLOAD SPIN-UP AND/OR ORIENTATION PRIOR TO SEPARATION
IGS ALIGNMENT – STORED STATE VECTOR

Figure 5-1

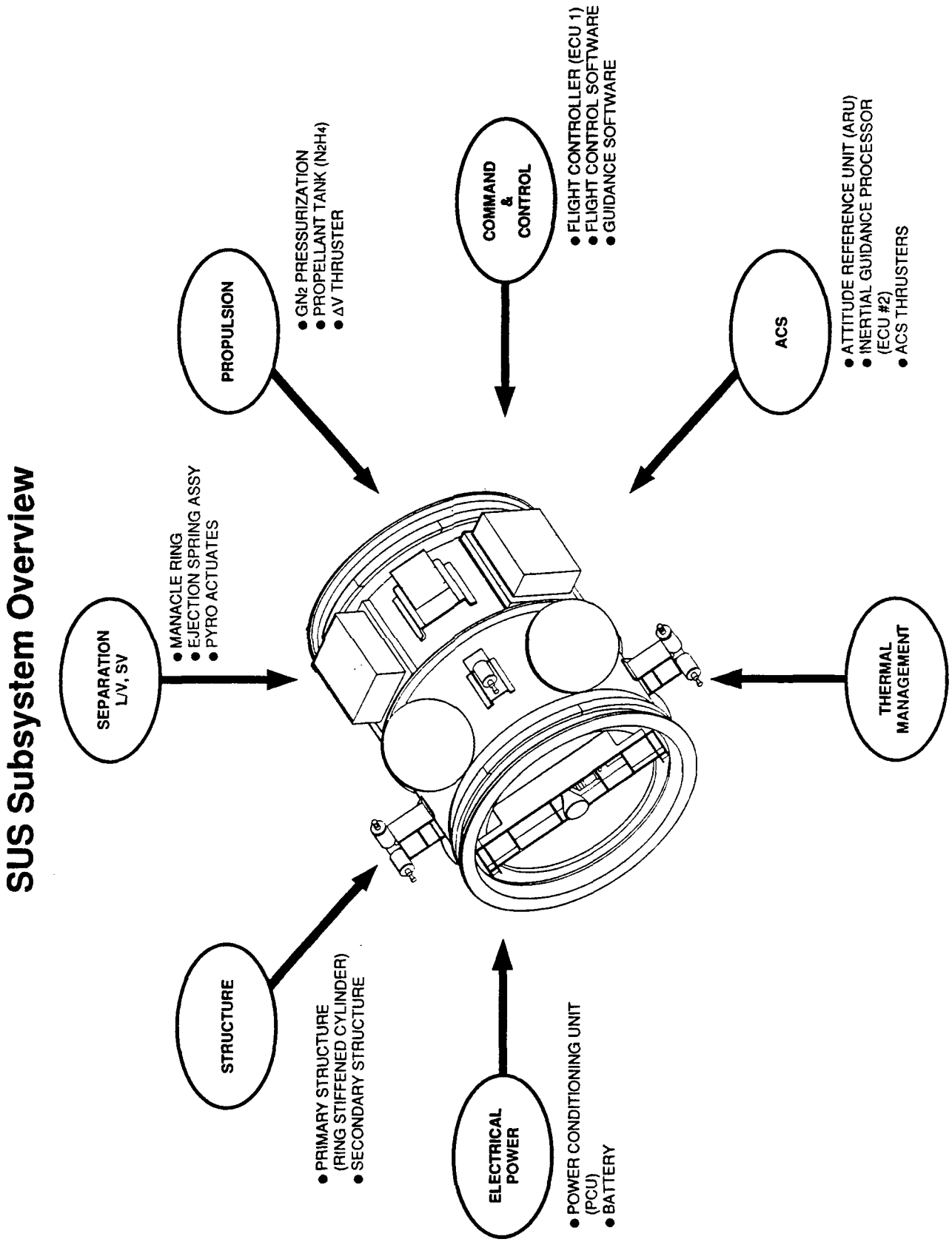

C11226-01A

Figure 5-2

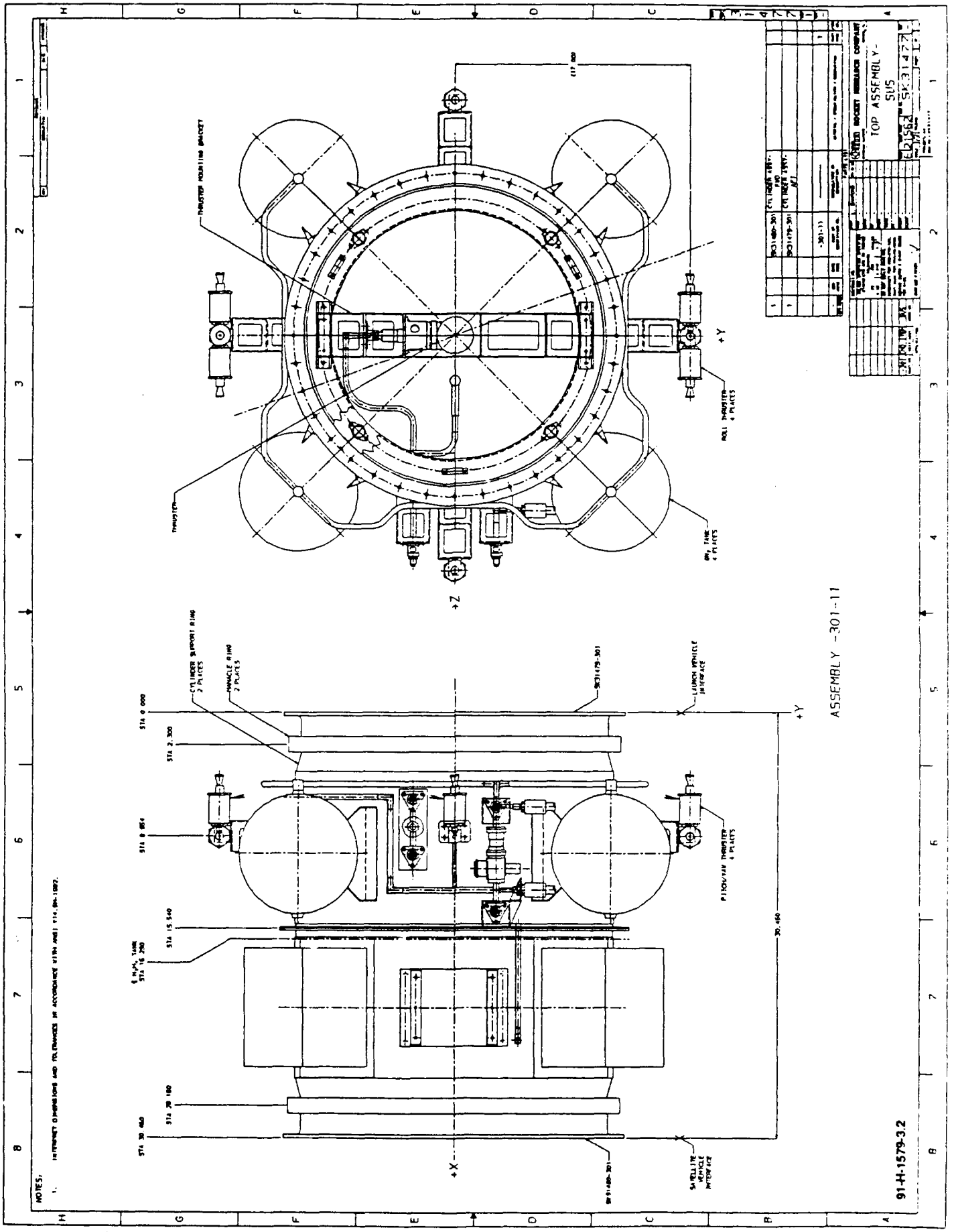
TOP ASSEMBLY-SUS
SK31477
ASSEMBLY -301-11
91-H-1579-3.2
+Y
+Z
+X
THRUSTER
ROLL THRUSTER 4 PLACES
PITCH/YAW THRUSTER 4 PLACES
LAUNCH VEHICLE INTERFACE
SATELLITE VEHICLE INTERFACE
CYLINDER SUPPORT RING 2 PLACES
MANACLE RING 2 PLACES
NOTES:

Figure 5-3

Manufacturing Methods
SUS FINAL ASSEMBLY

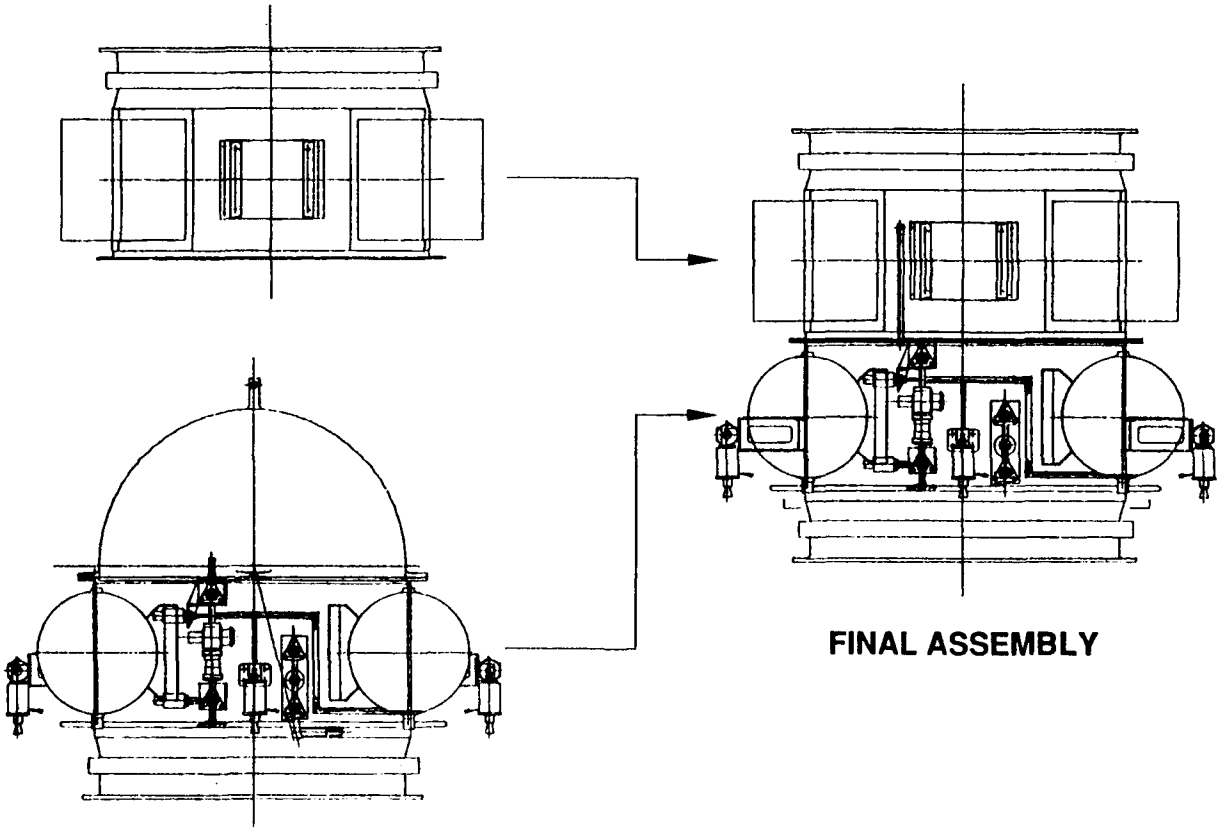

Forward Cylinder Assembly Complete

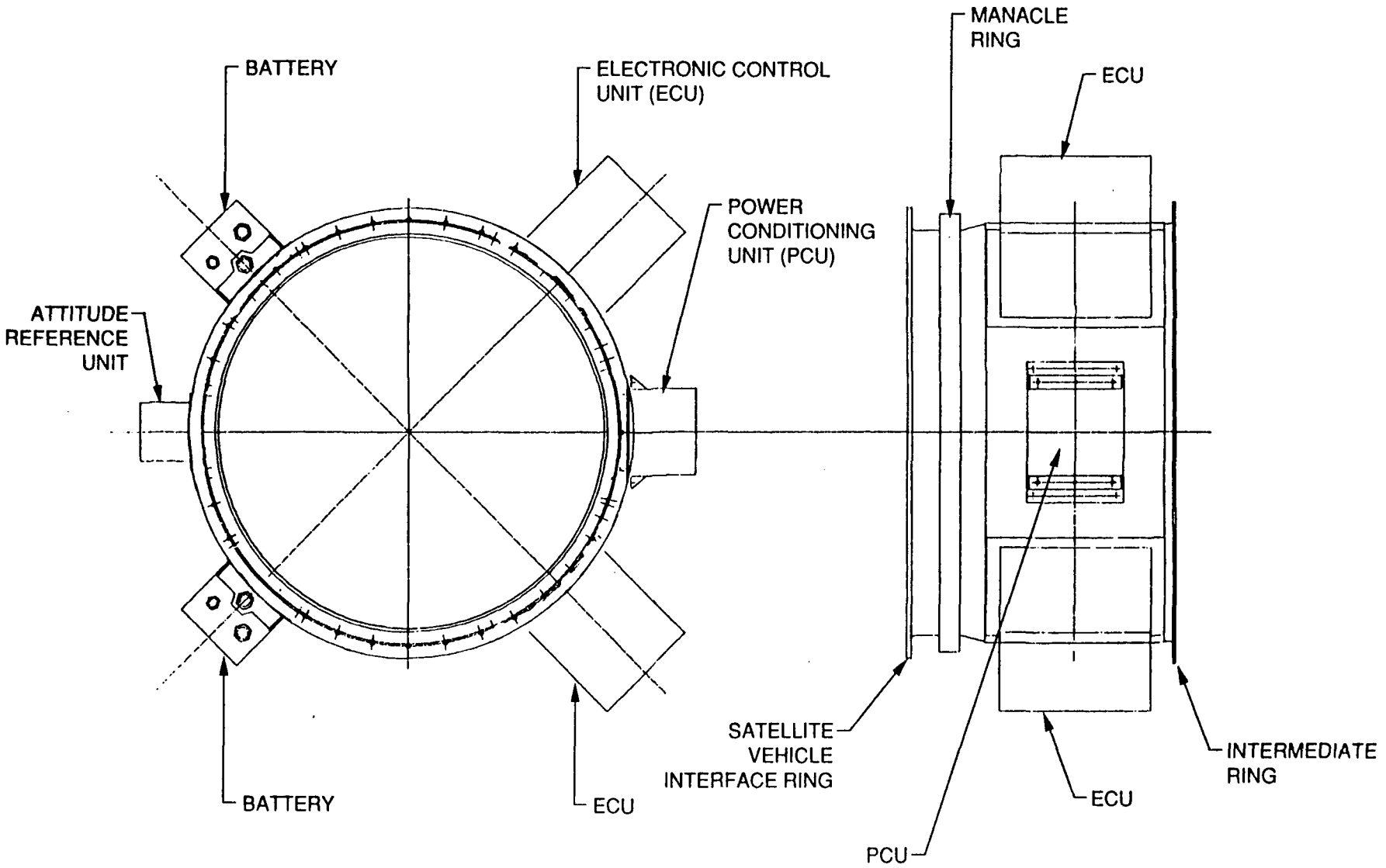

Figure 5-5

at two places with 180 ksi tension bolts and nuts (see SK 31480, sheet 3, Sections A-A and B-B). At each manacle ring assembly attachment point, the tensioning bolt passes through a trunnion fitting (SK 31516-101 similar to a barrel nut without threads), bolt cutter (Holex P/N R13200) and another trunnion fitting (against which the tensioning nut seats), as shown in section B-B of SK 31480 (sheet 2). At the forward cylinder assembly level, the avionics packages including: electronic control unit no. 1, electric control unit no. 2, the attitude reference unit and the power conditioning unit are installed to their respective mounting supports. The forward cylinder assembly calls out installation of the wire harnesses, completing connections to the avionics packages listed above as well as the satellite vehicle separation interface connector installation. Four separation spring assemblies (SK 31507-302) are called out in the forward cylinder assembly complete and attach to the cylinder support ring of the cylinder assembly at interfaces machined at the detail level (see SK 31485-101). The forward cylinder assembly (SK 31478-301) structure which is the primary structure for the avionics section, is fabricated from two rings, the cylinder support ring (SK 31485-301) and the forward intermediate support ring (SK 31487-301); and a skin panel (SK 31489-101). A tool is used to control the relationship of the rings as opposed to using close tolerance locating features machined into the thin-walled skin which is relatively flexible until assembled with the rings and splice plate. The two rings are installed into the tool which controls overall length (of the cylinder assembly), parallelism and concentricity of the rings. The skin is then installed to the rings with a splice plate (SK 31484-101, not detailed) to close the seam by match-drilling from 0.093 DIA. pilot holes placed in the rings and skin panel splice at the detail level. Lockbolts with collars provide fastening of the rings, panel and splice plate insuring joint quality by collar wrenching feature shear-off when clamp-up/torque is attained.

The aft cylinder assembly, shown in Figure 5-6, (SK 31479) is the SUS's propulsion section and mates the aft cylinder structure (SK 31481) with interface ring and manacle ring assemblies (similar to forward cylinder assembly) and installs the ΔV and ACS propulsion system components.

The SUS primary structure is composed of two ring stiffened cylinders (the forward and aft cylinder assemblies described above) joined at their intermediate rings as shown in Figure 5-7. The forward and aft cylinder assemblies are essentially identical except for overall length and skin panel penetrations required to accommodate subsystems (see aft cylinder assembly, Figure 5-8) and local reliefs in the forward cylinder assembly intermediate ring which accommodate mounting of the four flange tank as shown in Figure 5-9.

The SUS total weight for a free-flyer (SUS separated from host launch vehicle – interface and manacle ring stay with depleted booster) configuration to support the Hohmann transfer of a 400 lbm payload from 100 nm to 500 nm is 304.2 lbm. The weight breakdown by subsystem is: Propulsion System – 72.54 lbm, Avionics – 42.0 lbm, and structure and mechanisms – 53.8 lbm for a total SUS dry weight of 168.4 lbm. The propellant load to support the orbit transfer is 120.0 lbm of hydrazine and 15.8 lbm of nitrogen gas for a total propellant weight of 135.8 lbm. A reduced weight version of the configuration described above provides a SUS with a estimated dry weight of 120 lbm at the sacrifice of more costly components.

Aft Cylinder Assembly Complete

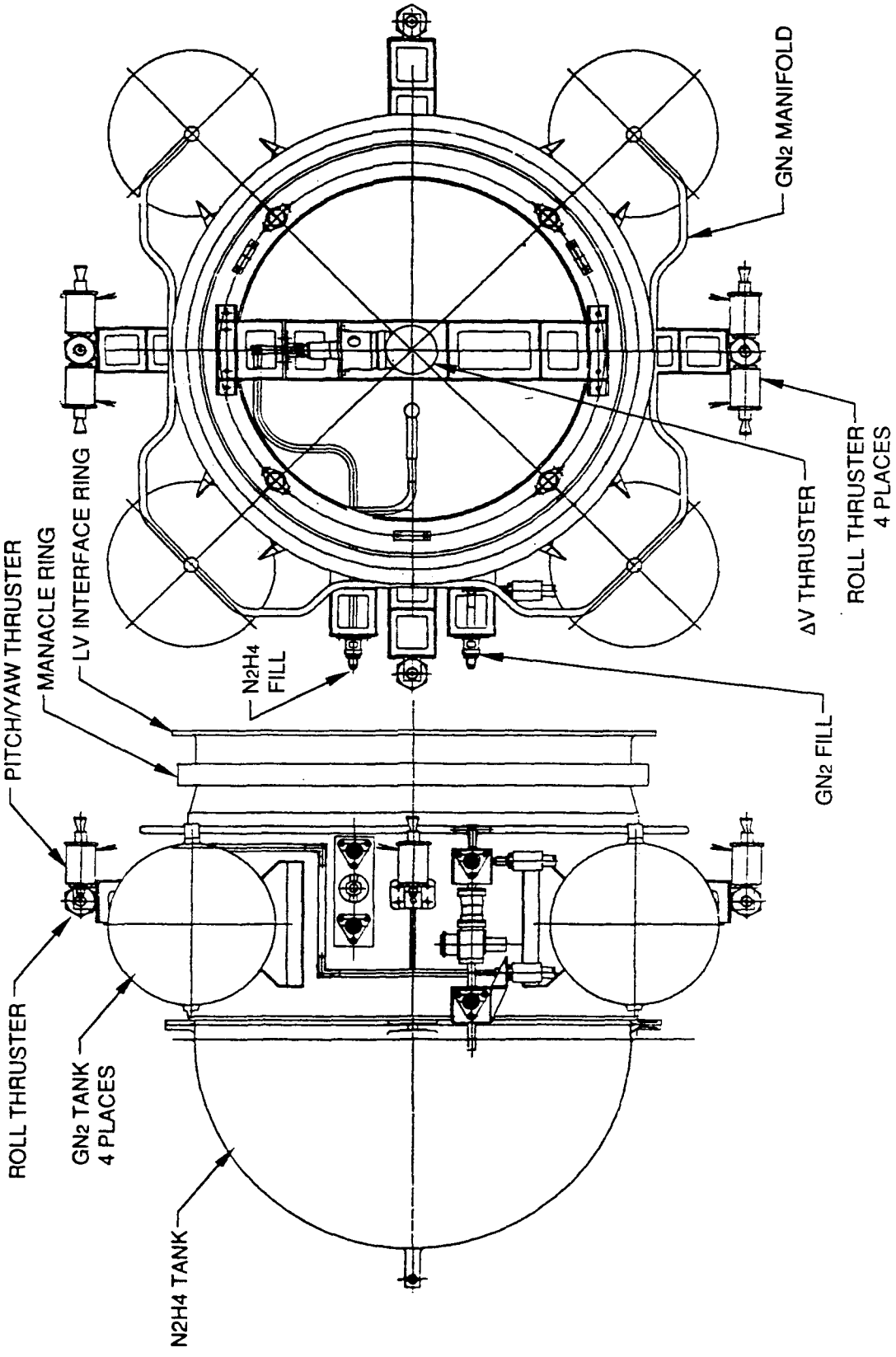

Figure 5-6

Structure

SECTION THROUGH PRIMARY STRUCTURE

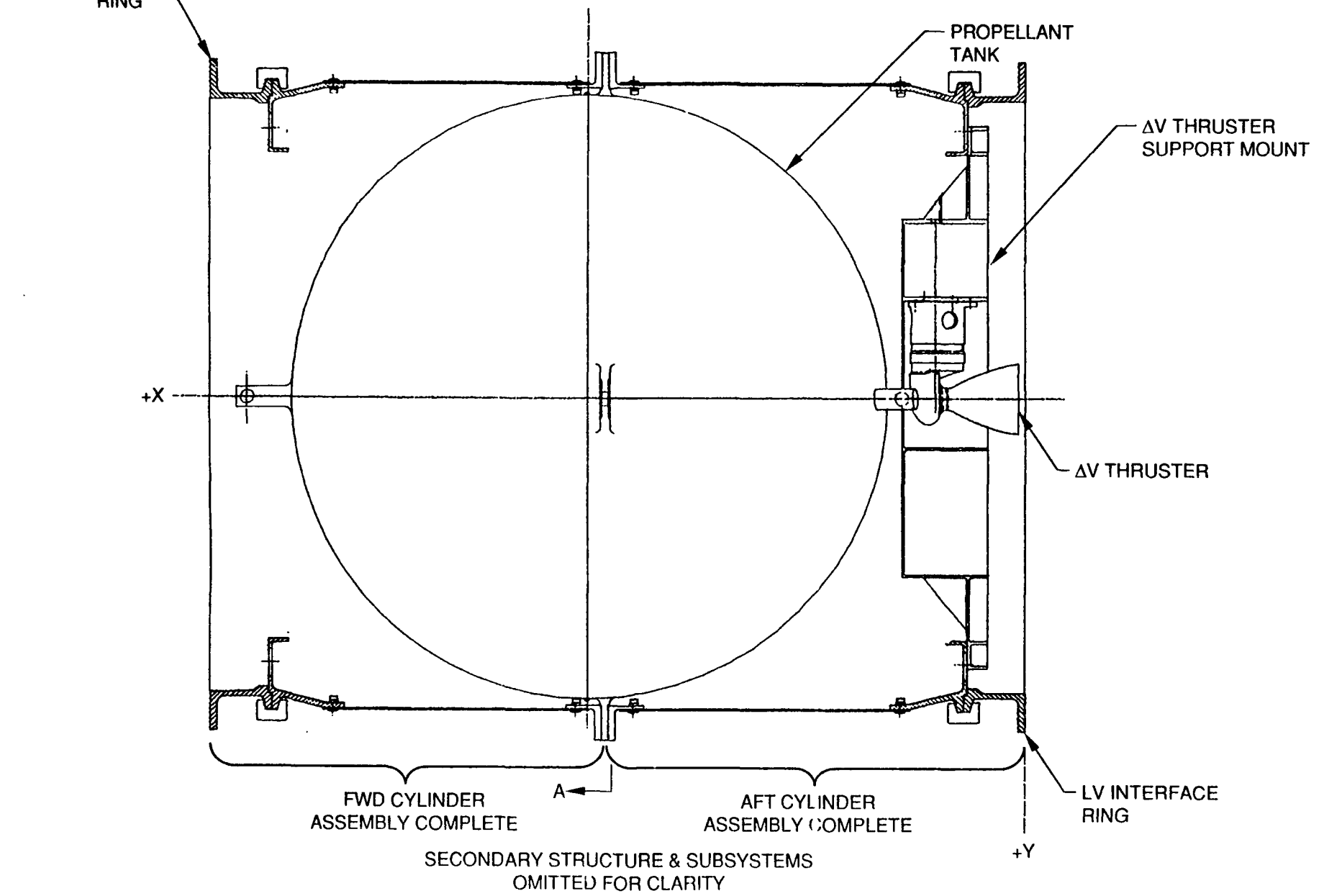

C11230-89

Figure 5-7

NOTES:

1. INTERPRET DIMENSIONS AND TOLERANCES IN ACCORDANCE WITH ANSI Y14.5M-1982.
2. LOCATE USING Ø.089 PILOT HOLES ON SK31485-101.
3. LOCATE USING Ø.089 PILOT HOLES ON SK31486-101.

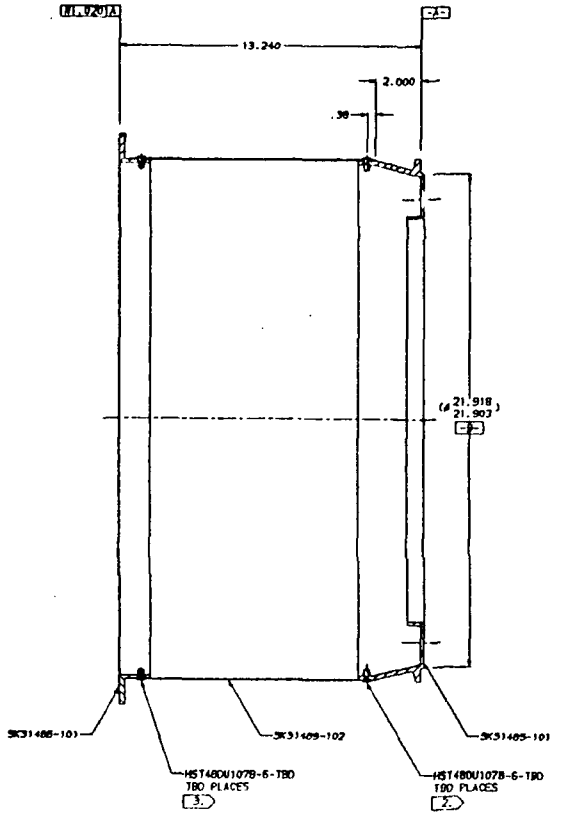

ASSEMBLY -301-11

TBD		HST480U1078-6-TBD	PIN AND COLLAR ASSEMBLY	
TBD		HST480U1078-6-TBD	PIN AND COLLAR ASSEMBLY	
1		SK31489-102	PANEL, SKIN	
1		SK31486-101	RING, INTRO SUPPORT-AFT	
1		SK31485-101	RING, CYLINDER SUPPORT	
		-301-11		

PARTS LIST

Chem ROCKET RESEARCH COMPANY

CYLINDER ASSEMBLY-AFT

E21562 SK31481

91-H-1579-3.16

Figure 5-8

Modularization of the SUS

Locating the ACS thrusters on the SUS aft structure and the choice of propellant tank with four in-plane mounting flanges near the weld-line allowed for design of a primary structure composed of two ring-stiffened cylinders with the propellant tank flanges sandwiched between the intermediate rings of the cylinder assemblies (see Figures 5-7 and 5-9). This configuration accommodated the development of separate avionics and propulsion sections. The avionics section (or forward cylinder assembly complete) and the propulsion section (or aft cylinder assembly complete) could be built up separately and therefore in parallel. This modularization and separation of inherently different component systems would greatly shorten and simplify the critical path for both development and end-item fabrication.

5.2 SEPARATION SYSTEM

The purpose of the separation system is to release the ascent constraint between the SUS and either the launch vehicle or space vehicle and provide sufficient relative velocity to prevent recontact of the two vehicles. Additionally, the separation system should minimize tipoff and provide for capture of all loose hardware.

The SUS separation system utilizes a manacle ring clamp (or V-band clamp) configuration with a two-piece clamping ring at each interface (see Figures 5-10 and 5-11).

The two halves of each manacle ring clamp ring are attached with tensioning bolts and nuts at two places with each bolt passing through a pyro activated bolt cutter (see Figure 5-12). The load in the tensioning bolt and nut is introduced into the manacle ring clamp halves through cylindrical pins (fitting, trunnion SK 31516) with machined flats for the mating nut or bolt. The pin serves to minimize bearing and bending stresses in the manacle ring.

Hard anodizing and solid-film lubrication of the contacting surfaces of the manacle ring halves, the cylinder support ring and the interface ring assure freedom from cold welding and gauling of the ring interfaces. Solid-film lubrication in conjunction with radially oriented ring deployment springs assure rapid deployment of the manacle ring upon separation.

Four ejection spring assemblies, Figure 5-13, are located uniformly about the cylinder support ring at each separation interface. The spring assemblies utilize compression springs matched for spring rate to develop the required relative velocity between the separating vehicles while introducing minimum tipoff.

As a consequence of the pin design selected to introduce tension bolt loads into the manacle ring, the separation system has a redundant separation mode. In the event a bolt cutter failed to operate, the actuation of the remaining bolt cutter with rotation of the manacle ring halves about the pins at the unactuated joint allows for separation of the vehicles.

5.3 PROPULSION SYSTEM

The propulsion system design philosophy is to minimize cost while building in system flexibility and accommodating range safety regulations. This is accomplished through simplicity of design using "off the shelf" flight proven components where feasible and developing a system which accommodates upgrade.

Separation

- SV/SUS from LV
- SV from SUS

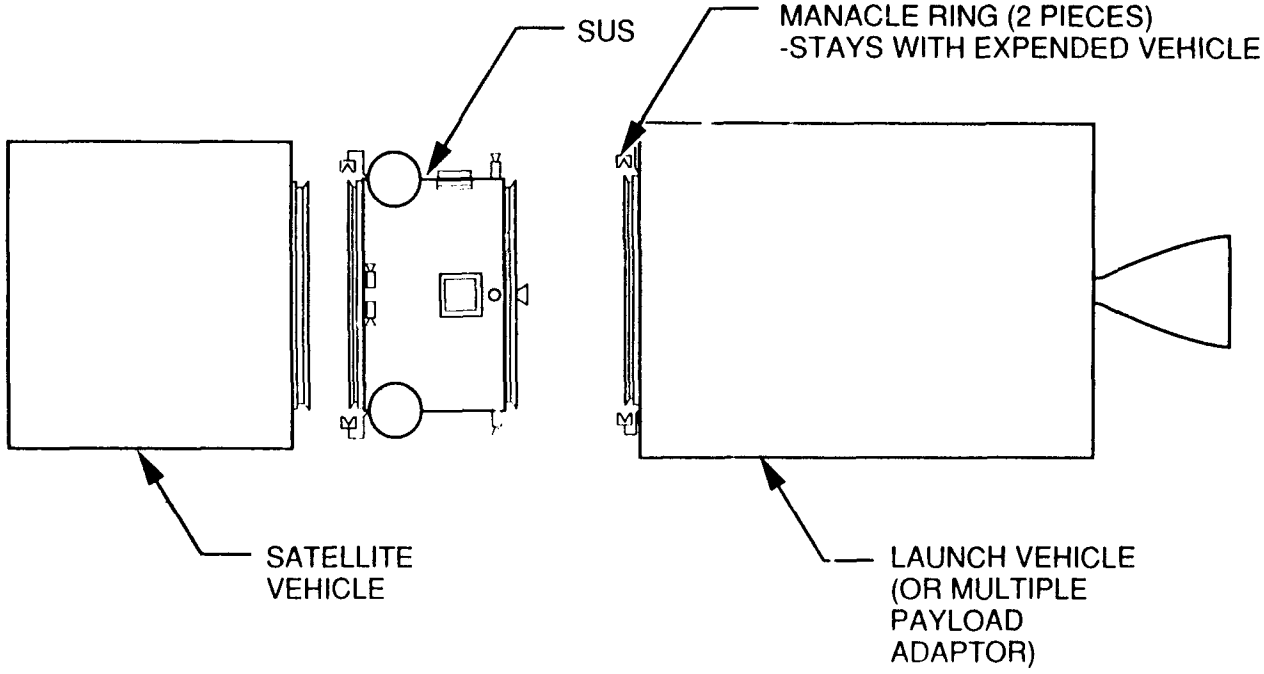

Figure 5-10

Separation
NOMINAL ACTUATION

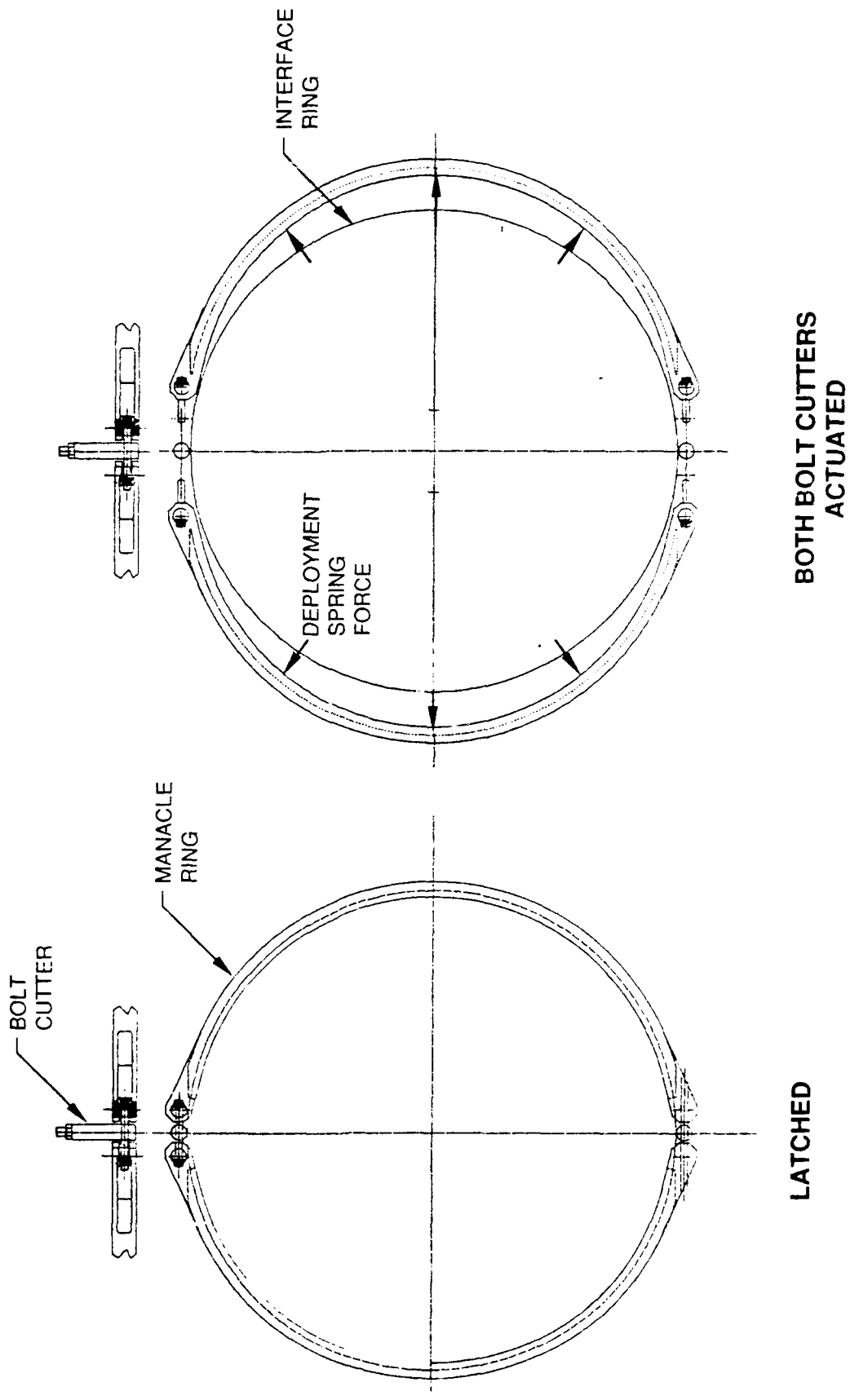

C11230-31

Figure 5-11

Separation
DETAIL OF BOLT CUTTER/MANACLE RING ASSEMBLY

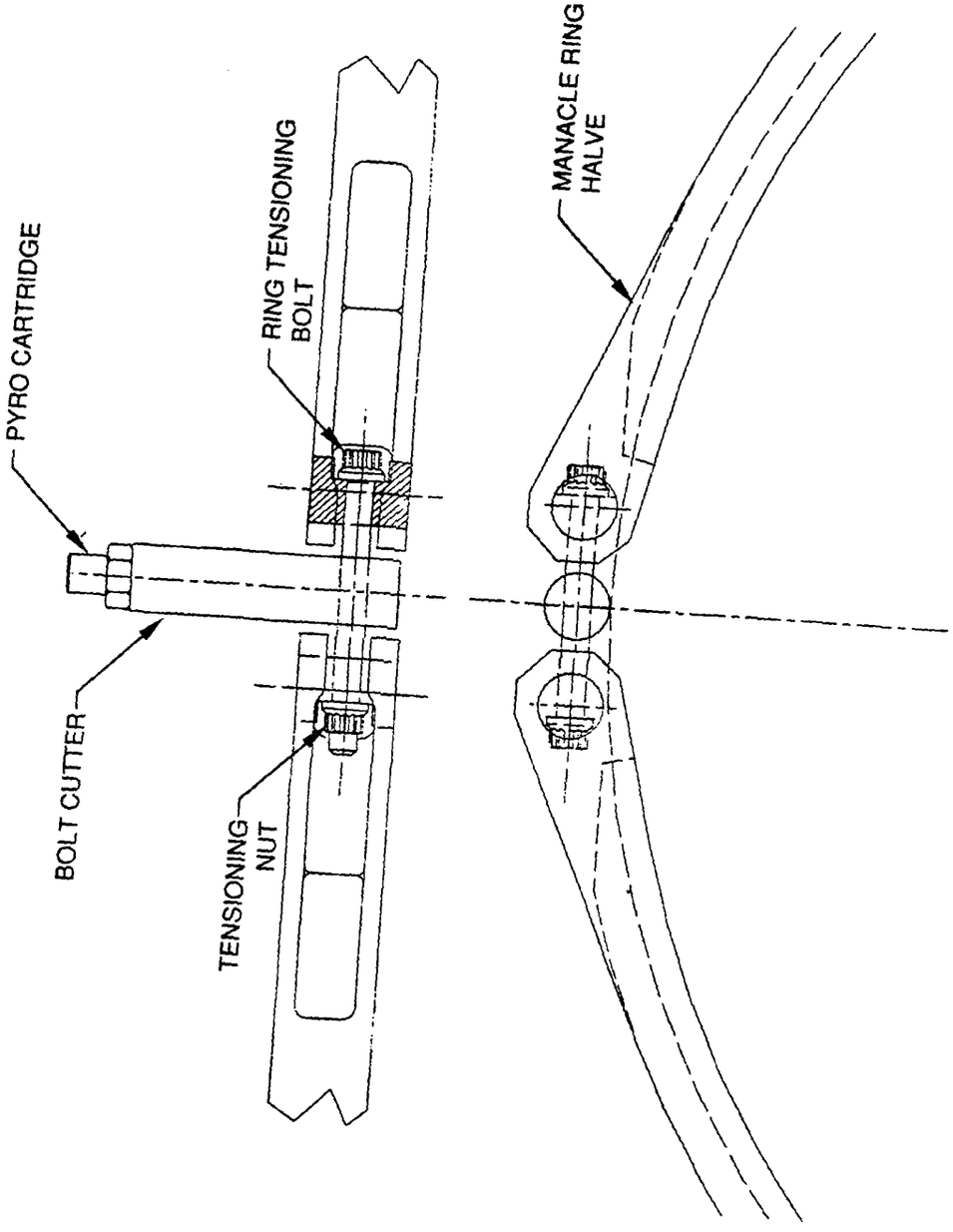

C11230-30

Figure 5-12

Separation System
SECTION THROUGH SEPARATION INTERFACE

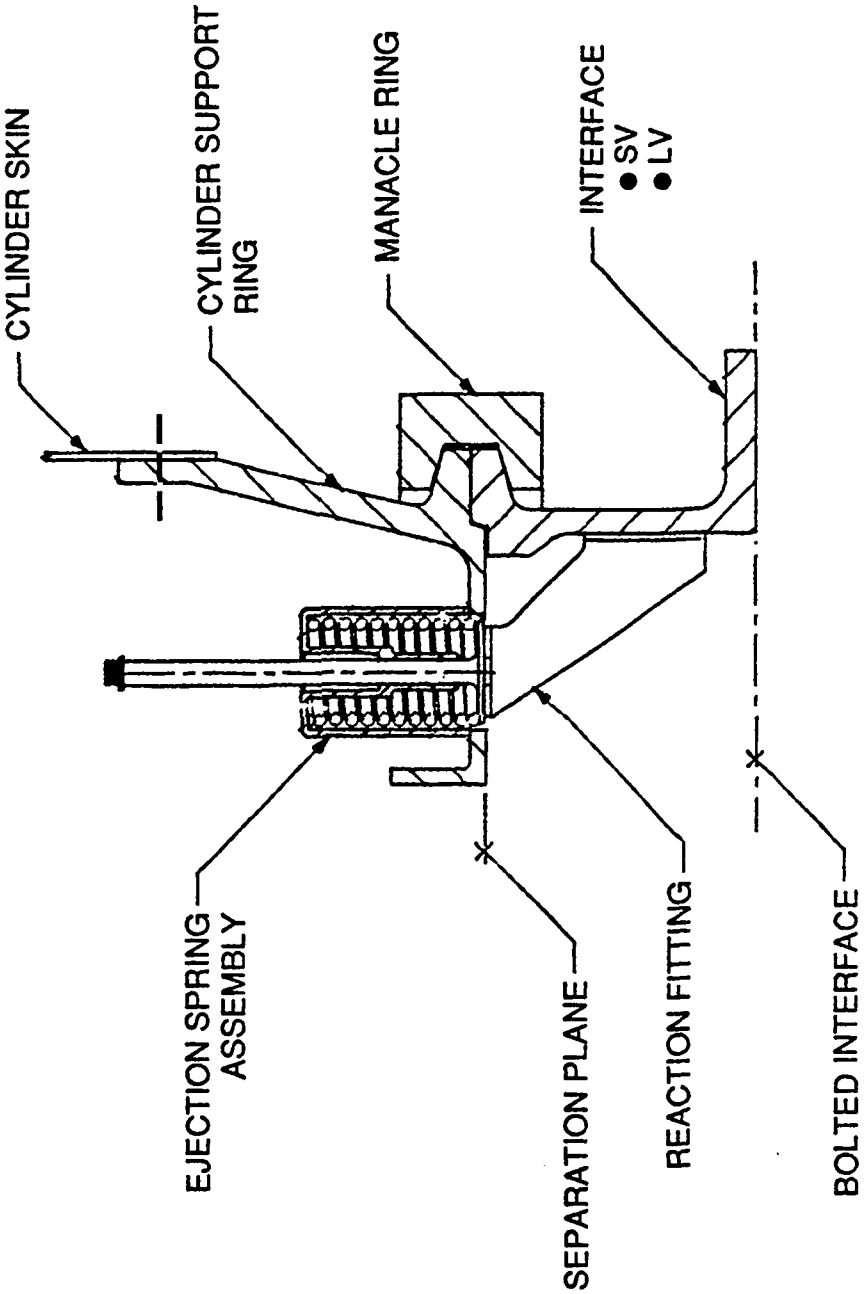

Figure 5-13

The propulsion system schematic, Figure 5-14, shows a single (ΔV) thruster, a single hydrazine propellant tank and a pressurized nitrogen gas storage system. The nitrogen gas (GN_2) is stored at 5750 psia in four 8.59 inch O.D. spherical tanks interconnected by a manifold. This manifold is serviced by a fill / drain valve and monitored through the use of a pressure transducer (a range safety requirement for the Western Space and Missile Center).

A pyro enable valve seals the pressurization system until activated, at which time GN_2 is fed through a filter to the pressure regulator. The output of the regulator is 365 psi with a minimum regulator inlet pressure of 465 psi. The use of a relief valve at this point provides transient over pressure relief (with recovery) to prevent the ACS thruster from over pressuring. The GN_2 pressurant is fed from the regulator to the propellant tank passing through a check valve and pyro enable valve to isolate the pressurization side of the hydrazine tank from the GN_2 system components. For missions with propellant loads of 120 lbm or less, the propellant side of the system could be operated in a blow-down mode and the pyro valve not operated or the line between removed. It is baselined because it gives the flexibility to provide a variety of propellant loads, up to 170 lbm. A fill/drain valve services the pressurization port of the propellant tank allowing for pre-pressurization to decrease the required GN_2 storage system capacity. A pressure transducer at the pressurant port provides a means for monitoring of the pressurized propellant tank (a range safety requirement WSMCR 127-1). A 22.140 inch I.D. spherical flight qualified propellant tank with an internal volume of 5555 cubic inches and a qualified propellant volume of 149 pounds of hydrazine (at 68°F) provides for propellant storage. The tank baselined has a maximum weight of 14.0 pounds, an operating pressure of 375 psig and with an offset propellant feed port (allowing for reduced overall assembly length) has a 99 percent expulsion efficiency. At the propellant feed port, a fill/drain valve provides for propellant loading, system check-out and detanking, if required. A pyro enable valve in the propellant feed line in series with the propellant valve isolates the hydrazine propellant from the ΔV thruster until actuated (satisfying the WSCMR-127-1 requirement that no single failure may cause propellant ignition). It should be noted that changing range safety requirements may allow this pyrovalve to be eliminated. This will be investigated in the detailed design. A service valve is located in the propellant feed line between the pyro enable valve and the propellant valve as a test port. The baseline propellant valve is flight qualified and provides a minimal pressure drop of 9.5 psid at the hydrazine flow rate of 0.22 lbm/sec required for the 50 pound thrust level from the baseline ΔV thruster. The 50-lbf ΔV thruster is the flight-qualified RRC Model MR-107 thruster used on the Atlas Roll Control Module. The MR-107 thruster with nozzle axis oriented 90 degrees to the reactor is compact along the thrust axis and contributes just over four inches to the overall length of the SUS while providing the equivalent thrust of engines with twice the length in the thrust axis. Thrust axis alignment of the ΔV thruster is performed optically. Alignment of the thruster is referenced to the SUS's satellite vehicle interface, thereby eliminating major influences of intermediate structure. Alignment adjustments are made by shimming and adjustments of eccentric spacers at the thruster mounting interface.

SUS Propulsion System Schematic

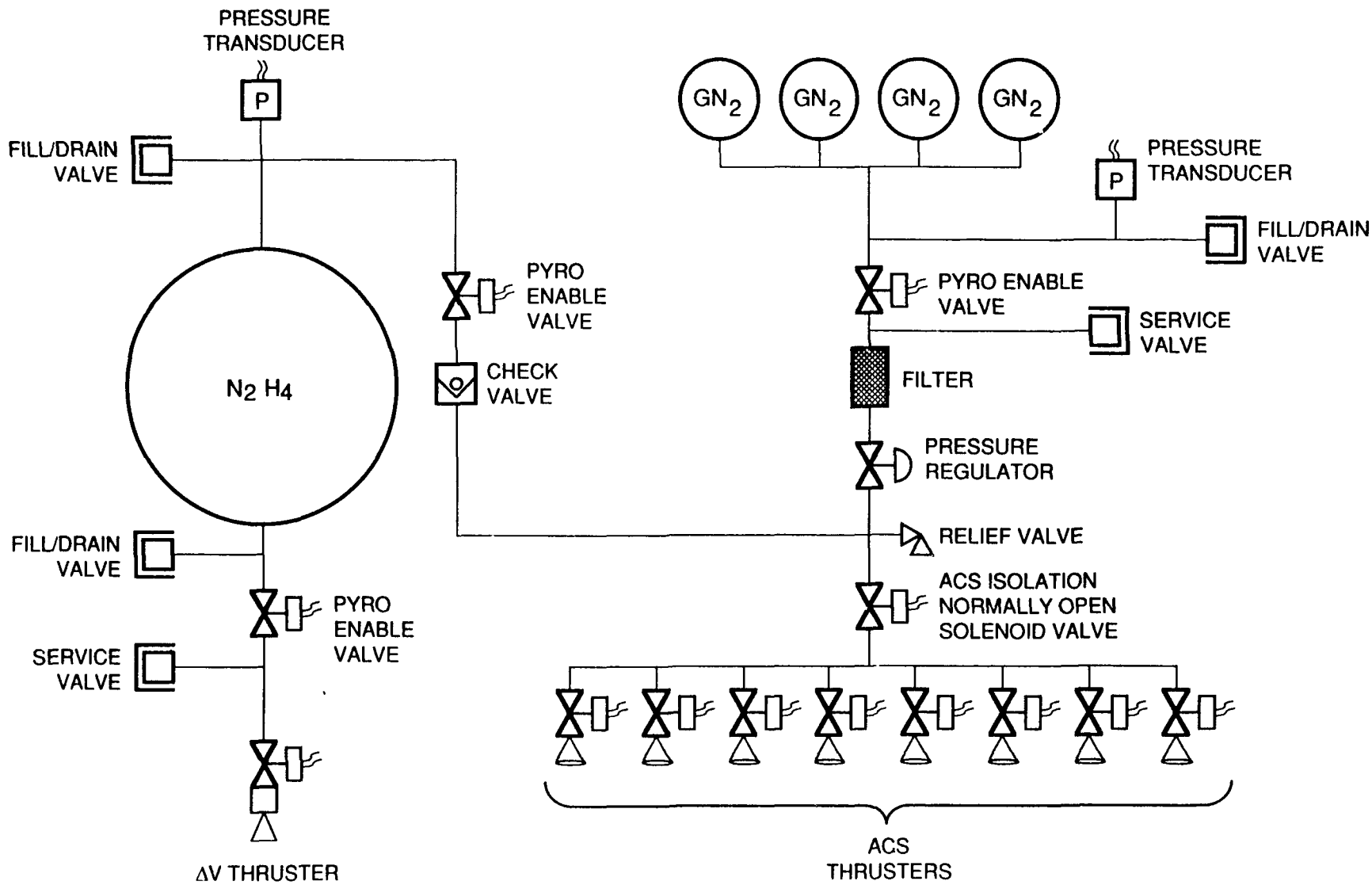

C11228-31A

Figure 5-14

5.4 COMMAND & CONTROL

The primary responsibility of the Command and Control (C&C) subsystem is administration of mission event sequences. This includes control of all SUS functions from SUS power-up through space vehicle separation. All event sequencing is based on time deltas referenced to an initial time-zero established by the launch vehicle.

The C&C subsystem receives system status information in a variety of formats including launch vehicle command discretes, subsystem monitors such as temperature and pressure transducers, in addition to an IGS interface as illustrated in Figure 5-15. This information is processed within the C&C subsystem and command outputs generated which control various SUS functions. These command functions are responsible for controlling SUS separation from the launch vehicle, propulsion system valve sequencing, ΔV thruster firing, and IGS navigation calculations. Additionally, the C&C subsystem is responsible for all subsystem fault detection and isolation functions.

The components of the C&C subsystem are contained within and enclosure referred to as the Electronics Control Unit #1 (ECU#1). This enclosure measures 8.5" x 6" x 6.65" and weights 7.5 lbs. It is powered by a regulated DC source provided by the Power Conditioning Unit (PCU), requiring ±5V, ±12V, and 28V.

A block diagram representation of the ECU is presented in Figure 5-16.

The various functions illustrated in this diagram are contained on four plug in circuit card assemblies (CCA) as described below:

- **Flight Controller Processor:** This CCA controls all mission sequencing, system upset and recovery and navigation updates. It incorporates an Intel 87C196KC embedded controller micro-processor operating at 12Mhz. System firmware is contained in 128K bits of ROM. Mission specific software data is stored in 32K of RAM and 32K of nonvolatile EEPROM. This CCA also contains a data acquisition subsystem which incorporates a 10 bit analog to digital converter integrated within the controller for the monitoring of propellant pressures and system temperatures. A watchdog monitor is also included for system upset detection and recovery.
- **Communications Interface:** This CCA provides the communication support between SUS and the launch vehicle and satellite. The ground service umbilical protocol is also handled through this interface. A differential RS422 serial interface for data transfer and status monitors for launch vehicle discretes are provided by this interface.
- **Electro Explosive Device and Thruster Valve Controller:** This CCA performs the appropriate signal conditioning for initiation of the various pyro functions. These include pyro separation signals for both the launch vehicle and the payload and pyro valve control of the propulsion system. This CCA also contains the drivers for control of the hydrazine delta V thruster and safety interlock circuitry for mission critical functions.
- **SUS Software:** Two software application programs are required by SUS. These include a flight controller software package for control of mission event sequencing and the inertial guidance software package which performs all guidance functions. These application programs will be written in both "C" and assembly language. Assembly

Command and Control Subsystem Functional Description

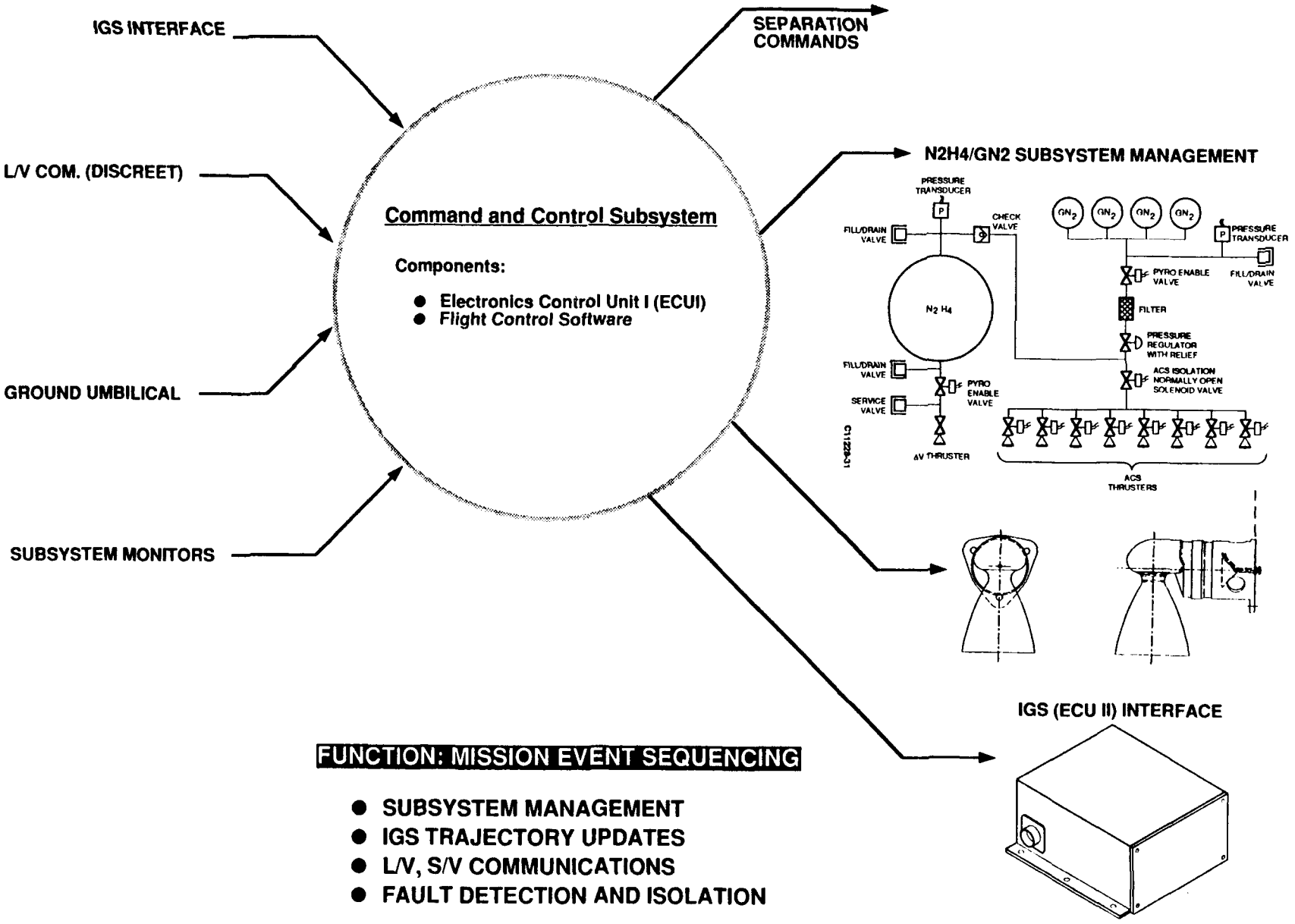

FUNCTION: MISSION EVENT SEQUENCING

- SUBSYSTEM MANAGEMENT
- IGS TRAJECTORY UPDATES
- L/V, S/V COMMUNICATIONS
- FAULT DETECTION AND ISOLATION

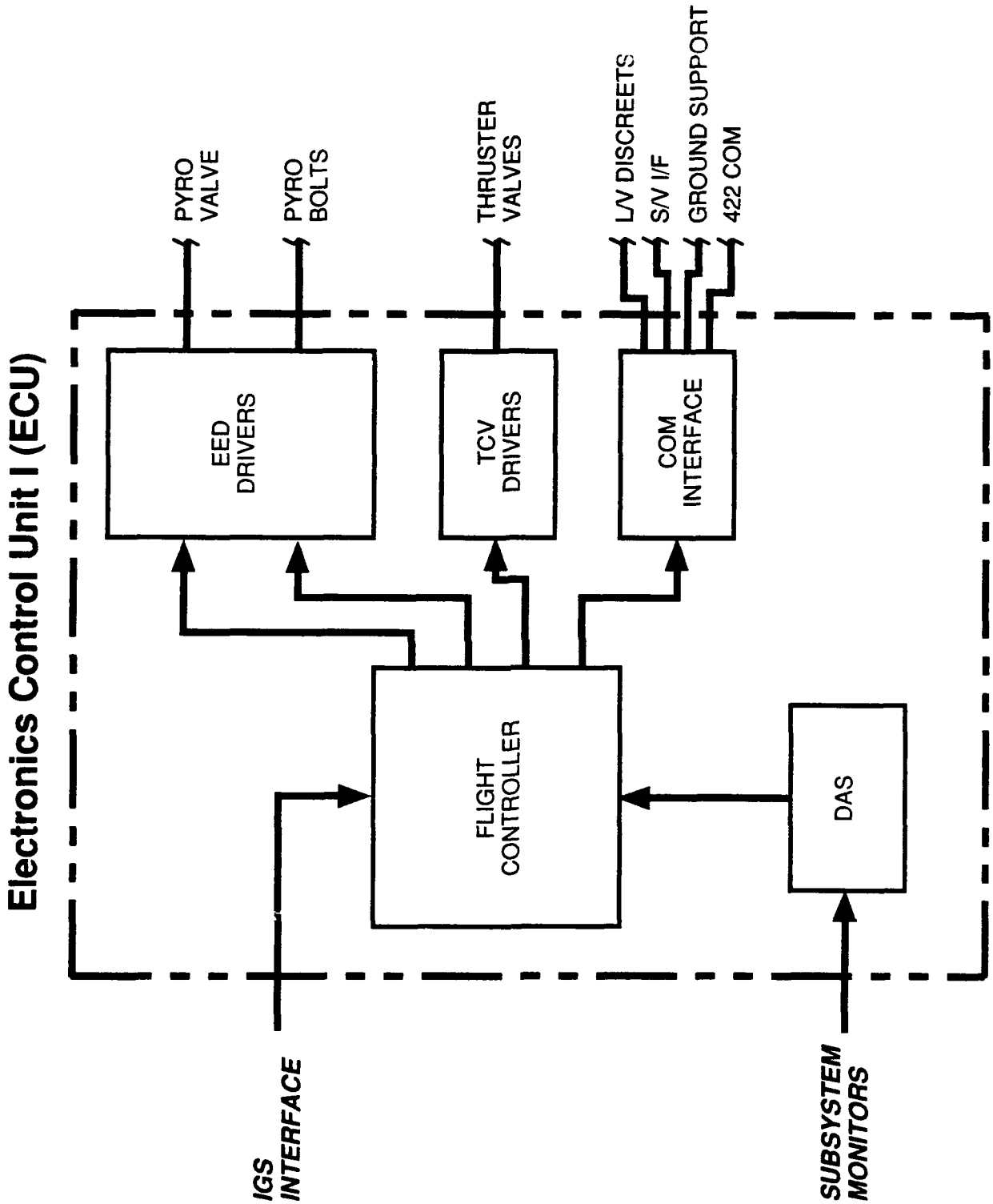
Electronics Control Unit I (ECU)
PYRO VALVE
PYRO BOLTS
THRUSTER VALVES
L/V DISCREETS
S/V I/F
GROUND SUPPORT
422 COM
EED DRIVERS
TCV DRIVERS
COM INTERFACE
FLIGHT CONTROLLER
DAS
IGS INTERFACE
SUBSYSTEM MONITORS

language will be used for meeting specific system performance requirements and where cost effective. The flight controller software and the inertial guidance software represent approximately 3600 and 5400 lines of code, respectively. Mission specific software will be contained in the program executives. The executive modules will control program flow via nonapplication specific modules. This flow down structure allows mission changes to be incorporated with relatively few changes to the main code. The mission specific executive will include a constants table that defines timing and control sequence parameters.

5.5 ATTITUDE CONTROL

The SUS incorporates a three axis cold gas attitude control system (ACS). This system enables SUS to perform various attitude maneuvers including, large angle reorientation, attitude hold, payload spinup and orientation, and nutation control functions as required.

As illustrated in Figure 5-17, the attitude control system consists of two major subsystem components: the cold gas attitude control thrusters and associated feed system, and the Inertial Guidance System (IGS) sensor electronics. A description of these two major subsystem components follows.

5.5.1 Attitude Control Thrusters

Eight, cold gas nitrogen attitude control thrusters provide control about the vehicle pitch, yaw, and roll axis. The thruster mounting geometry is such that torques are produce about the pitch and yaw axis, utilizing a single thruster where as a pure couple is produced about the roll axis, requiring two thrusters. The roll couple requirement is due to the fact that the roll thrust vector does not lie in a plane that passes through the vehicle CG thereby introducing cross coupling terms in pitch and yaw. It is possible to develop a configuration where this is not the case but the design would be payload specific reducing the generic capability of the vehicle.

The four high pressure GN_2 storage tanks provide the pressurant gas for the ASC thrusters in addition to providing pressurant for the main hydrazine propulsion feed system. A single stage regulator reduces the GN_2 from the storage pressure which ranges between 5750 psia and 465 psia down to a regulated system pressure of 365 psia.

5.5.2 Inertial Guidance System:

The thruster control commands are generated by the IGS which is a subsystem component within the attitude control system. A block diagram of this component is presented in Figure 5-18. Contained within the IGS are three angular rate gyros which measure motion about the pitch, yaw, roll axis of the vehicle, a microprocessor to correct the rate gyro signals, and an IGS processor which performs guidance computations and output command generation.

The rate gyro assemble chosen for this application contains two, two axis, Dynamically Tuned Gyros (DTG) manufactured by Bell Incosym Textron. The gyros are mounted in a precision instrument block with the gyros oriented to measure vehicle pitch, yaw, and roll motions with one redundant axis. The rate gyro assemble is housed in a separate enclosure which is mounted on the forward exterior cylindrical structure of SUS.

ACS Block Diagram

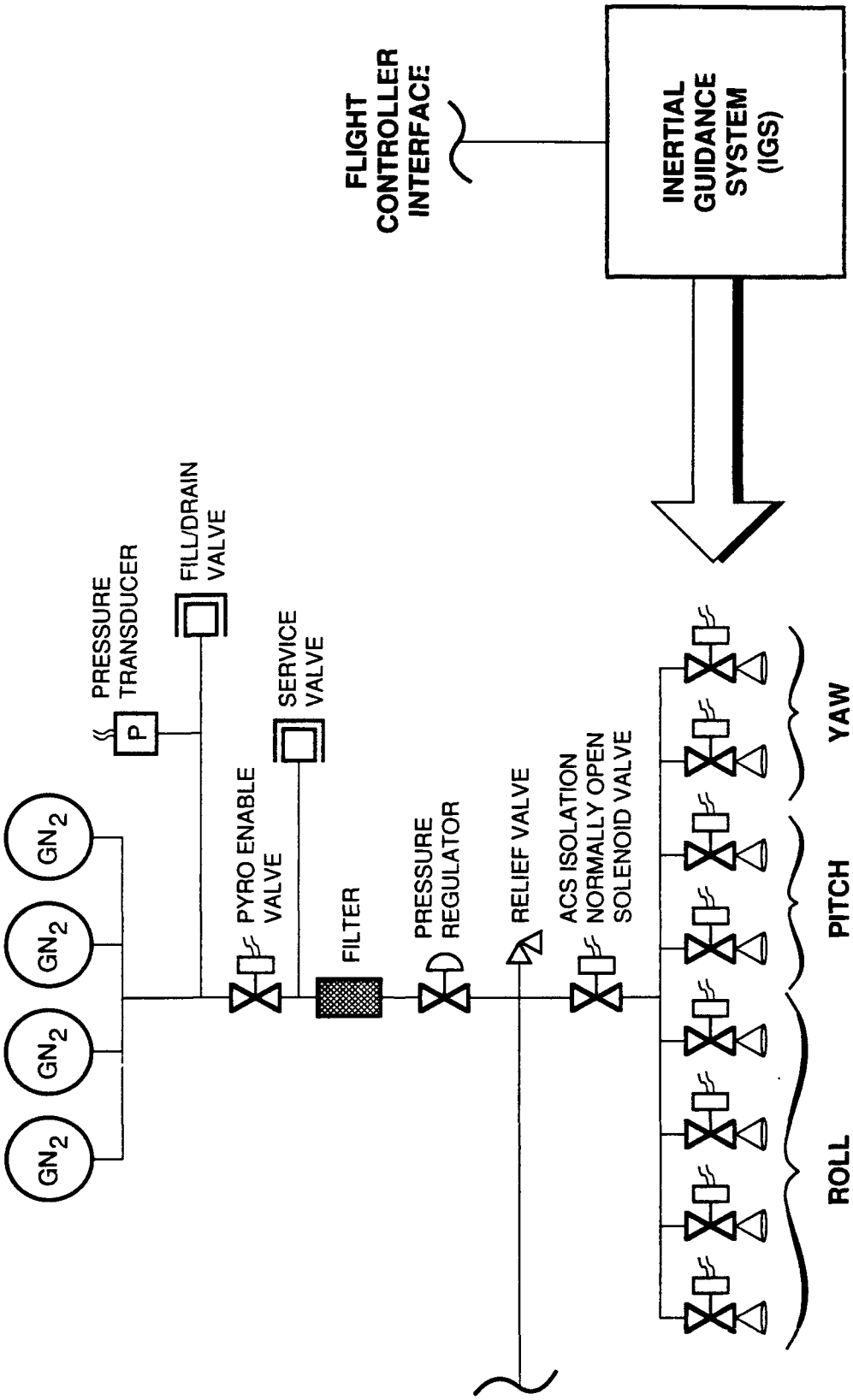

Figure 5-17

IGS Functional Block Diagram

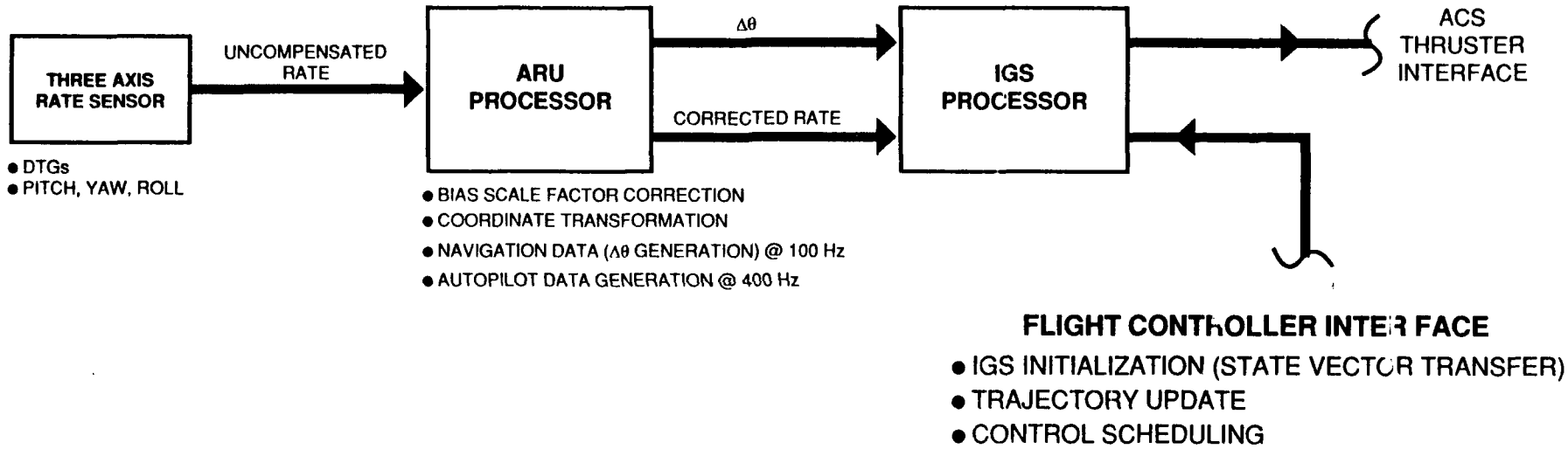

IGS BIAS STABILITY= 1 °/HR

The two processors responsible for gyro signal conditioning and navigation and command calculation are housed in a separate enclosure referred to as Electronics Control Unit #2 (ECU#2). This package measures 8.5" x 6" x 6.65" and weights 7.5 lbs. It is powered by regulated DC power provided by the Power Conditioning Unit (PCU), requiring ±5V, ±12V and 28V. Contained within the ECU#2 are three plug in circuit card assemblies as described below:

- **Attitude Reference Unit (ARU) Processor:** The ARU processor acquires data from the pitch, yaw, and roll gyros and performs the bias and scale factor corrections. Navigation and autopilot data are generated from this information and passed to the Inertial Guidance processor where they are used to generate control response commands. The navigation data is passed at 100 Hz and the autopilot at 400Hz.
- **Inertial Guidance System (IGS) Processor:** The IGS processor processes the ARU navigational and autopilot data for attitude determination and control. The IGS in turn directly controls the Pulse Width Modulation (PWM) ASC drivers for attitude control. A serial link is provided to the Flight Controller (ECU 1) for state vector transfer and subsystem control.
- **Attitude Control Valves Drivers:** This CCA contains the PWM and power drivers which control the attitude control thruster valves.

5.6 ELECTRICAL POWER

5.6.1 Introduction

The SUS power subsystem is completely self-contained and requires no launch vehicle power interface. SUS power is supplied by a single 28-volt silver zinc primary battery. A power conditioning unit (PCU) located on the forward cylindrical structure provides all power regulation and system protection functions. A description of the power system follows.

5.6.2 Power Conditioning Unit (PCU)

The PCU provides regulated DC power to the electronic systems. The PCU contains a DC to DC switch mode power converter which converts the 28VDC battery power to +5, -5, +12 and -12 volt DC power. It also provides protected 28VDC for the electro explosive devices and valve drivers. A bit monitor is also furnished for battery monitoring, power converter faults, power on reset conditioning and battery/ground umbilical sensing. The power sequencing and source control circuitry controls the main power source and sequencing of onboard and ground power. Application of internal power is controlled by a launch vehicle discrete controlled pyro switch. All source power is protected and fused. The unit dissipates 3.2 Watts and is over 70% efficient.

5.6.3 SUS Battery

SUS incorporates a Silver-Zinc primary cell. The battery is manually activated with a wet stand time of 150 days. The battery delivers 28 Volts DC and has a capacity of 8 Amp hours. This is a prequalified battery which is used on existing space programs and available from Eagle Picher. It is packaged in a 7.00 x 3.78 x 4.33 housing and weighs 8.1 lbs.

6.0 ANALYSIS

6.1 PERFORMANCE ANALYSIS

6.1.1 Introduction

The performance analysis was directed at establishing the control system requirements necessary to achieve a final orbit altitude accuracy of ±20 nm for a Hohmann transfer from 100 nm to 500 nm, while maintaining an inclination accuracy of ±0.35 degree. Additionally, this same inclination accuracy is required for plane change maneuvers of up to 6 degrees. The performance analysis concentrated on determining and verifying (via simulation) the stability requirements for the control systems under consideration, establishing the attitude error sensitivity of a configuration to various error sources, estimating preliminary orbit error budgets based on anticipated attitude errors at the time of transfer maneuver initiation, and calculating the total GN_2 budget to perform the baseline mission (including both the ACS functions and the propulsion system feed pressure regulation function).

To conduct the performance analysis, three separate models were utilized. Estimates of the final orbit accuracy were based on ΔV directional errors incorporated into numerical, two-body orbit model (subsequently referred to as the orbit error model) propagating a Keplerian orbit. A flight trajectory simulation model was utilized to provide detailed predictions of the attitude dynamics of a configuration subject to several system non-idealities, including: propellant slosh, energy dissipation, thrust misalignment, control system dynamics, and environmental influences. The attitude response predictions were utilized as the ΔV directional errors in the orbit error model. In addition, the flight trajectory simulation was used to determine control system response characteristics. A model of the GN_2 pressurization system was employed to calculate the total GN_2 requirements for a given configuration performing the baseline mission. The model computes the GN_2 required to regulate the N_2H_4 propellant feed system during the transfer maneuvers while providing the required ACS GN_2, thereby providing preliminary sizing requirements for the GN_2 pressurant ullage.

Simulation results for the spin-stabilized configuration indicate that while the NCS provides spin axis stabilization during the coast phase of the mission, NCS alone is not sufficient to satisfy the desired orbit accuracy requirements. Because NCS is not capable of monitoring attitude errors (NCS provides only rate control), the final orbit accuracy is primarily dictated by the attitude error accumulated at the end of spin-up. Sensitivity analysis results indicate that the major contributor to the attitude error at spin acceleration termination is the attitude rate error at LV/SV separation. Subsequent analysis suggests that implementation of an attitude rate reduction (ARR) system is necessary and sufficient to satisfy the orbit accuracy requirements. ARR utilizes two rate gyros/sensors and four reaction jets to provide pitch/yaw rate control in a non-spinning mode of operation.

Results of an orbit error analysis indicate that the three-axis configuration satisfies the orbit accuracy requirements. Preliminary stability analysis suggest that the SUS design satisfies stability criterion for all rigid payloads under consideration.

6.1.2 Control System Options

The performance analysis characterized the attitude dynamic response of both the spin-stabilized and three-axis stabilized configurations. The spin-stabilized configuration is a prolate spinner which in the presence of liquid slosh effects is unstable and will ultimately spin about an axis 90 degrees from the initial spin axis. Thus, an active nutation control system (NCS) is required to stabilize the spin axis attitude. Nutation control systems typically implement accelerometers or rate gyros to monitor transverse body rates and reaction jets provide control torques to limit transverse body rates thereby maintaining the nutation angle within desired limits.

The use of an attitude rate reduction (ARR) system involves the implementation of two rate gyros/sensors to measure transverse angular rates, and four reaction jets to provide both positive and negative control torques about the pitch and yaw axes. Figure 6-1 presents a schematic of the ARR system.

ARR SCHEMATIC

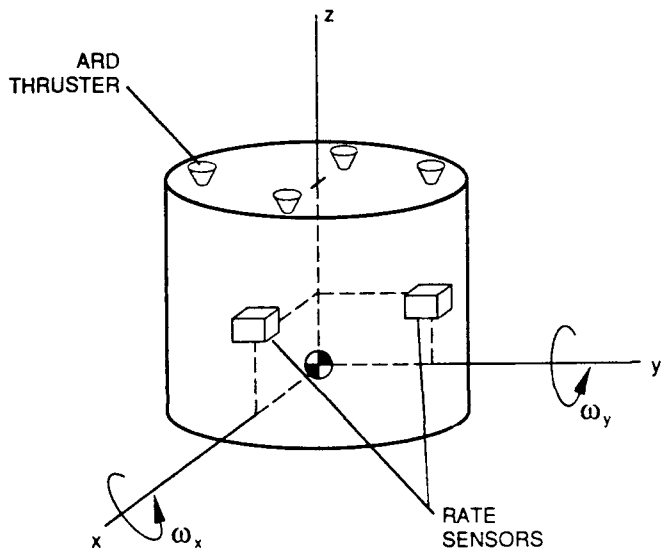

C11229-91 **Figure 6-1**

The ARR system contains all the components required to perform nutation control and will be utilized in this capacity during the coast phase of the mission. The NCS utilizes a single rate sensor and the two reaction jets 90 degrees opposed to the rate sensor. Once the transverse angular rate measured by the rate sensor exceeds a pre-determined threshold level, a control torque is applied in a fashion to reduce the angular rate, which in turn reduces the nutation angle (see Figure 6-2).

The three-axis stabilized configuration implements three rate gyros to propagate attitude errors referenced to a preprogrammed state vector. Because the three-axis configuration relies on a pre-programmed attitude and does not have provisions to perform inertial attitude updates, the three-axis configuration attitude accuracy is limited by initial LV attitude errors, sensor alignment errors, and sensor bias stability. These errors represent attitude errors (relative to the preprogrammed state vector) that the attitude reference unit does not know are present.

6.1.3 Model Summary

The flight trajectory model represents the SUS and payload combination as a two-body vehicle. The main body is modelled as a asymmetric rigid body with six degrees-of-freedom

NCS PERFORMANCE PARAMETERS

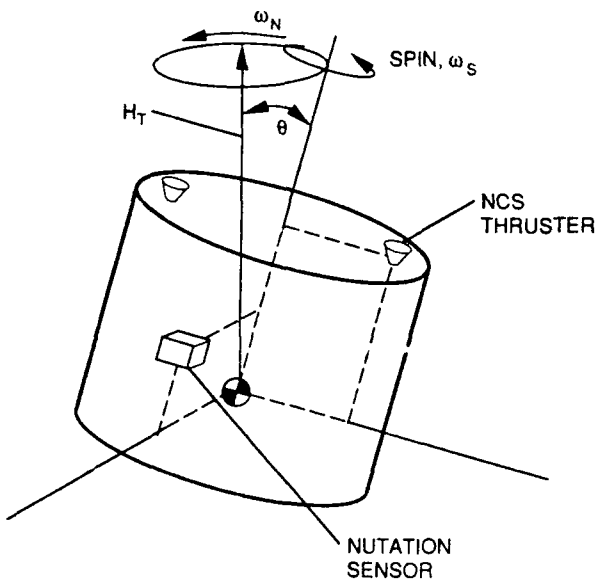

NCS SCHEMATIC

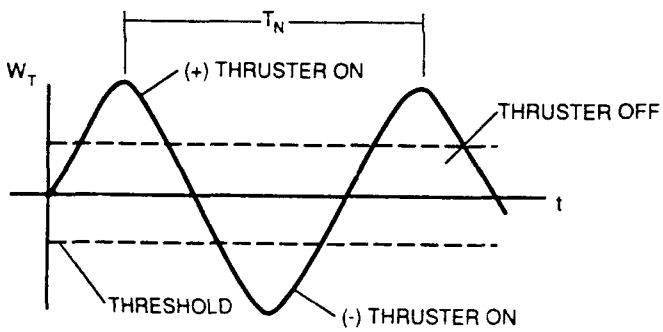

C11229-94 **Figure 6-2**

and is assumed to represent the SUS inerts and the payload. For simulation of the spin-stabilized configuration, the propellant was modelled as a spherical segment of fluid hinged to the main body via a two degree-of-freedom rotational joint. The hinge is assumed to be located at the center of the propellant tank and possess damping equivalent the viscous losses introduced by laminar shear at the fluid/tank wall interface. Figure 6-3 depicts the simulation model. For all simulations (spin-stabilized and three-axis) the SUS inert weight was 168 lbm, the payload was assumed to weigh 400 lbm, be 30 in. in diameter and 20 in. in height, and the propellant mass was varied between 120 lbm and 59 lbm during the first Δ-V maneuver and between 59 lbm and 5.5 lbm during the second ΔV maneuver. The 5.5 lbm of propellant remaining at the end of the second burn represents reserves for post-SV maneuvers, as well as hold-up residuals in propellant tank and lines.

For the three-axis configuration transient response characterization, the simulation attitude dynamics model used was similar to the simulation model employed in the spin-stabilized configuration analysis with the exception of the way the propellant was modelled during ΔV thruster firings. For these cases the propellant was modelled via mechanical equivalent spherical pendulums (see Figure 6-4). Preliminary estimates of the pendulum properties (i.e., mass, length, damping, and hinge point) were based on existing empirical data for spherical tanks of equivalent size and fill levels. Pendulum parameters were obtained from NASA technical notes NASA TN D-2737 (pendulum physical properties) and NASA TN D-1991 (damping). In instances where there was no significant axial acceleration levels, the propellant was modelled as a spherical segment of fluid (identical to the spin-stabilized configuration).

SLUG MASS MODEL AND LIQUID DAMPING ESTIMATE

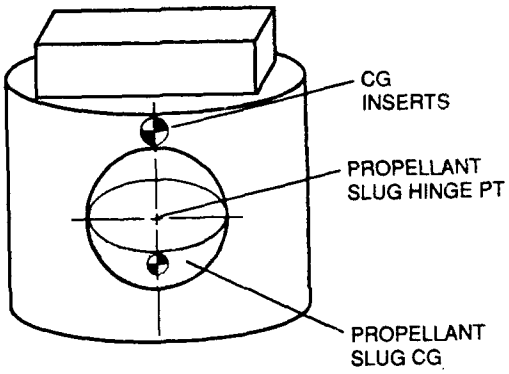

SLUG MASS MODEL

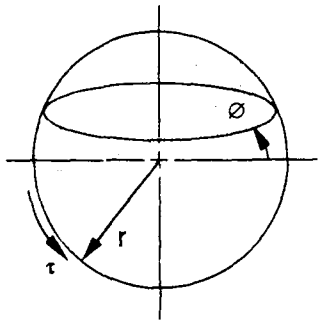

$$\tau = \frac{\pi\mu\, Re^{1/2}\, r\dot{\varnothing}}{9.92 g_c}$$

$$M = \tau A_s r;\ c = M/\dot{\varnothing}$$

LIQUID DAMPING ESTIMATE

C11229-93 **Figure 6-3**

SLOSH MASS MODEL AND MECHANICAL EQUIVALENT

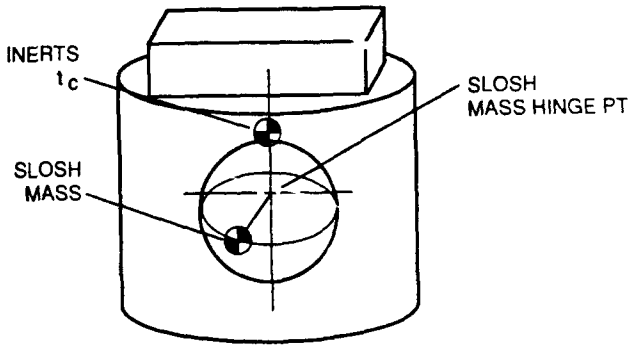

SLOSH MASS MODEL

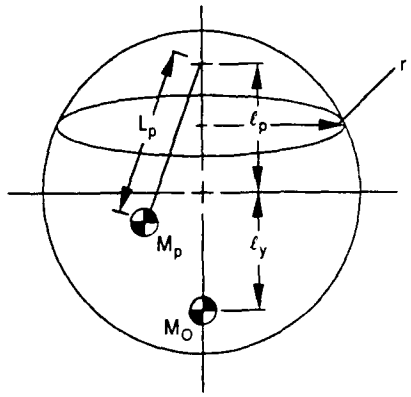

MECHANICAL EQUIVALENT

C11229-96 **Figure 6-4**

6.1.4 Spin Stabilized Results

A series of analyses was conducted to characterize the performance of the spin-stabilized configuration. The analyses included attitude error sensitivity, attitude rate allowable, separation dynamics, and NCS performance.

Sensitivity studies were performed to determine the influence of various mission/design parameters on the attitude errors present at the end of spin-up and the end of the first ΔV firing. Of primary interest are the attitude errors at the end of spin-up since, at this point the vehicle attitude is essentially fixed in inertial space, these errors are propagated throughout the remainder of the mission. Thrust misalignment induced attitude errors at the end of the first maneuver, while they are of concern, are controllable via spin rate and thrust vector alignment tolerances and are of secondary concern. Attitude error sensitivities were established by systematically varying a given error source level and monitoring the attitude deviations introduced by the variation at the end of a particular phase of the mission. For example, at the initiation of the spin-up sequence a number of transverse angular rates were introduced and the attitude error at spin-up termination was determined for each rate. The sensitivity was then determined by calculating variation in attitude associated with the

corresponding change in angular rate. The major error sources, their sensitivities and their anticipated error levels are given in Table 6-1. The LV attitude error is based on LV user manual data, while the remainder of error levels excluding attitude rate errors are based on best estimates of alignment, positioning, and balancing tolerances.

Table 6-1
SPIN-STABILIZED ERROR BUDGETS

Error Source	Sensitivity	Magnitude	Error
Attitude Rates	5.0 deg / deg/s*	2.45 deg/s **	12.25 deg
LV Attitude Error	1.0 deg / deg	2.83 deg	2.83 deg
SUS / LV Alignment	1.0 deg / deg	1.27 deg	1.27 deg
Spin Acceleration			
Attitude Rates	8.11 deg / deg/s	2.45 deg/s **	19.87 deg
Principal Axis	1.5×10^{-5} deg / oz-in^2	10,000 oz/in^2	0.15 deg
Misalign	0.90 deg / deg	1.50 deg	1.35 deg
Spin Axis Misalign			
Thrust Misalignment			
Angular Offset	6.22 deg / deg	0.56 deg	3.48 deg
	0.055 %ΔV / deg	0.56 deg	0.31 %ΔV
Radial CG Offset	11.60 deg / in	0.07 in	0.81 deg
	0.049 %ΔV / in	0.07 in	0.0034 %ΔV

* Sensitivity based on a 5 second delay between separation and spin initiation.
** Attitude rate required to achieve accuracy of ±20 nm based on rss of errors.

The attitude error (not including errors associated with initial attitude rates) based on a root sum square of the individual errors is approximately 5 degrees which results in a semi-major axis variation of ±1.0 nm. As the SUS orbit accuracy requirement is specified at ±20 nm, it is evident that these error sources have minimal influence on performance. (Note that even a summation of attitude errors results in an orbit error of only ±2.5 nm).

Based on this result and owing to the high sensitivities associated with initial attitude rate errors, the maximum initial attitude rate allowable was determined. This rate is the maximum attitude rate that the vehicle may experience at LV/SV separation and still satisfy the orbit accuracy requirement of ±20 nm based on an rss of the attitude errors. As presented in Table 6-1, the maximum rate allowable is 2.45 deg/sec (1.75 deg/sec, P/Y) and is composed of both LV attitude rates and separation-induced rates. LV user's manuals indicate that LV attitude rate error is on the order of ±1.0 deg/sec in both the pitch and yaw axes thereby requiring the separation system to introduce no more than ±0.75 deg/sec (P/Y). While the LV attitude rates used in the analysis are conservative, they are considered appropriate due to the preliminary nature of the analysis. For detailed design, LV attitude rates representative of actual capabilities will be used.

An analysis was conducted to estimate the angular rates introduced by the separation mechanism (see Figure 6-5). The separation system is sized to provide a minimum separation velocity of 12 in/sec and nominal of 13 in/sec. For the analysis the LV was treated as an inertial mass (i.e., the LV/SV interface remained fixed during the separation transient). The primary angular rate producing error sources included spring rate mismatch (±1%) , spring radial position tolerance (±0.050 in.), radial cg offset (300 oz-in.), and initial propellant orientation (±90 degrees relative to tank).

SEPARATION SYSTEM ASSEMBLY
(Separation Velocity: 12 in./sec)

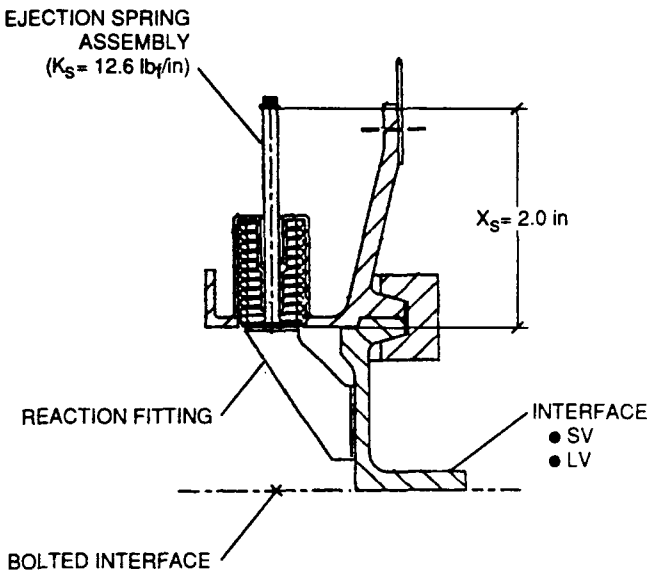

C11229-95 **Figure 6-5**

Simulation results indicate that the angular rate may be as great as ±1.5 deg/sec (P/Y), resulting in a total initial attitude rate error of ±3.5 deg/sec (as compared to 2.45 deg/sec as a minimum allowable). The estimated semi-major axis error based on an attitude rate of 3.5 deg/sec is ±40 nm and the estimated inclination error is ±1.06 deg (inclination errors are based on a plane change maneuver performed at the orbit line of nodes for a 100 lbm payload and 120 lbm of propellant). The orbit error sensitivity to initial attitude rates is evident in this case as a 40% increase in the angular rate from the maximum allowable resulted in a 100% increase in the semi-major axis variations. While efforts may be made to minimize the angular rates introduced by the separation system, the sensitivity to initial rates suggests that measures be taken to eliminate any transverse angular rates present at LV/SV separation thereby minimizing the influence of these rates on orbit accuracy.

The control torque available from a given reaction jet is currently 75 in.-lbf which is capable of eliminating up to 40 deg/sec per axis in 5 seconds. Thus, the ARR system will be able to eliminate all anticipated attitude rates prior to spin-up initiation. The implementation of the ARR results in a semi-major axis accuracy of ±12 nm and an inclination accuracy of ±0.16 degree which satisfies the orbit accuracy requirements.

An analysis was conducted to establish the GN_2 requirements during NCS activation as well as verify that the nutation angle is maintained within the prescribed limits. For the analysis it was assumed that rate sensor bandwidth was infinite (i.e., ideal response characteristics), a rate threshold of 1.0 deg/sec (equivalent to a nutation angle of 1.15 deg), a minimum NCS thruster 'on' time of 0.020 sec, and the energy dissipation was provided by damping at the propellant hinge point due to viscous shear losses due to propellant slosh. (Initial analysis without NCS activation indicated that the SV would achieve a flat spin condition in approximately 500 sec after completion of the first ΔV thruster firing while the coast phase of the mission may be as great as 2800 sec.) Results of the analysis indicate that the GN_2

requirement to perform the NCS function is 10.56 lbm (based on an Isp=65 sec and a control torque of 75 in.-lbf). Figure 6-6 presents the time history of the nutation angle during NCS activation. It is evident from this figure that the nutation angle is maintained below the desired limit of 1.15 degrees. It should be noted that the GN_2 requirement is heavily dependent on the inertia ratio, energy dissipation rates, and threshold levels and no effort has yet been made to minimize NCS propellant requirements.

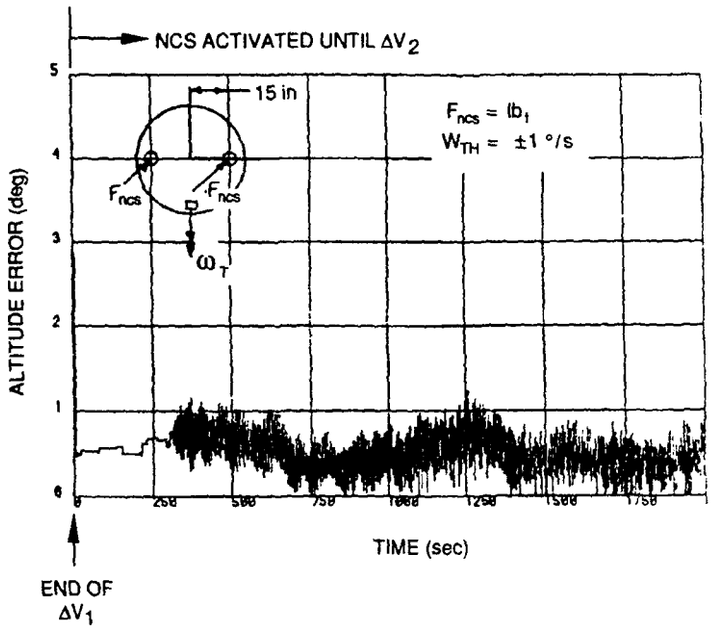

C11229-97 **Figure 6-6**

A preliminary GN_2 propellant budget has been established and is summarized in Table 6-2. The budget reflects those functions currently anticipated for the baseline mission. The attitude rate reduction and spin-up/spin-down requirements are based upon momentum requirements and the NCS requirement reflects the results of the analysis described in the previous paragraph.

Table 6-2
GN_2 PROPELLANT BUDGET

Function	GN_2 Mass
Attitude Rate Reduction	0.13 lbm
Spin-Up to 30 rpm	0.82 lbm
NCS During Coast (t_{ncs} = 2800 sec)	10.56 lbm
Despin	0.82 lbm
Total GN_2 Required (I_{sp} = 65 sec)	12.33 lbm

6.1.5 Three Axis Stabilized (TAS) Results

A series of analyses was conducted to characterize the performance of the three-axis stabilized configuration. The analyses included control system stability and transient response characteristics, ACS GN_2 propellant requirements, and orbit error estimates. The three-axis control (TAC) system implements quaternions as attitude errors for closed-loop feedback, proportional plus rate control in the control law, and cold gas reaction jets utilizing pulse width modulation as the actuation method. The pulse width modulator is assumed to

provide nearly proportional control up to saturation. The quaternion based attitude propagation algorithm employs a fourth-order Taylor series expansion, which requires only the current information from the gyros. (Note that there are a number of different strapdown attitude algorithms of varying complexity. If necessary, a tradeoff between algorithm complexity and performance can be performed.)

Because the implementation of closed-loop feedback can result in an unstable system response, an analysis was conducted to establish the stability of the system and define under what conditions (if any) an unstable configuration may result. For this analysis the only non-rigid element of the vehicle was associated with the liquid propellant (i.e., the payload was assumed to be itself rigid and rigidly mounted to the SUS) and propellant damping was ignored, which results in conservative estimates of stability requirements. ~~The plant attitude dynamics were derived from the linearized equations of motion and found~~ to be:

The system block diagram and associated transfer function are presented in Figure 6-7. The Routh-Hurwitz stability criterion was used to establish stability requirements. The necessary and sufficient conditions for stability requires that the system loop gain (Ka) and the rate-to-position gain ratio (Kr) be greater than zero, and that the plant pole is greater than the plant zero. The first two criteria are satisfied by appropriate selection of control system gains. The third criteria is a function of propellant parameters and requires that the propellant hinge point be located below the vehicle cg (i.e., $X_p < 0$). For the minimum payload configuration (100 lbm) the propellant hinge point is located 3.4 in. below the vehicle cg thus, for all rigid payloads considered (>100 lbm) the SUS design satisfies the Routh-Hurwitz stability criterion.

As the stability analysis does not give any indication as to the transient response characteristics of the system under consideration, an analysis was conducted to establish the transient performance of the TAC system. The performance was based on a step torque of 11.4 in-lbf both the pitch and yaw axes. This torque represents the maximum torque condition based on preliminary estimates of thrust misalignment. The loop gain was selected to provide a steady-state attitude error of 0.10 degree (P/Y), and the rate-to-position gain was selected to provide critical damping based on a completely rigid vehicle. The results of the transient response analysis are presented in Figure 6-8. This figure compares the transient performance of a completely rigid vehicle with that of a vehicle incorporating propellant slosh effects. It is evident that the non-rigid vehicle exhibits stable response characteristics similar to those of the rigid vehicle. The underdamped response is due to the presence of propellant oscillations resulting from transverse excitation of the vehicle (see Figure 6-9). The slight increase in the steady-state error (defined as E in Figure 6-8) is a result of the propellant aligning along the misaligned thrust axis thereby increasing the thrust misalignment due to a shift in the vehicle cg (see Figure 6-9).

Because the TAS configuration provides attitude error correction capability, the pointing accuracy of the vehicle is only limited by the attitude errors that the attitude reference is either not aware of or cannot eliminate (i.e., steady-state errors in the presence of thrust misalignment). Table 6-3 presents a listing of the primary sources of attitude error and their magnitude. The attitude error associated with thrust misalignment is the difference between

TAS ANALYSIS RESULTS

SYSTEM BLOCK DIAGRAM

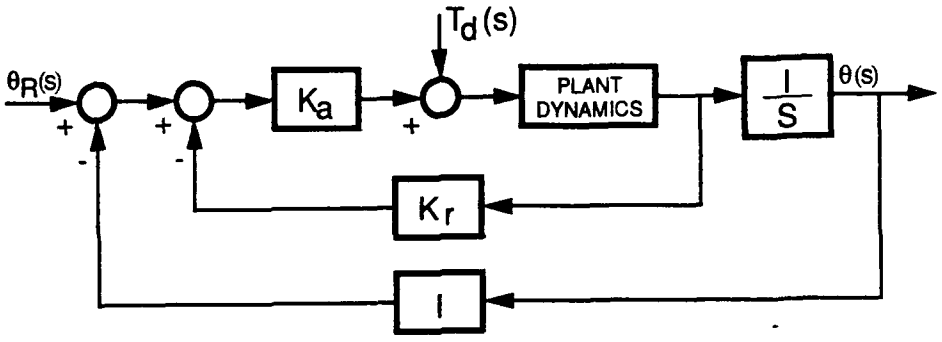

TRANSFER FUNCTION

$$\theta_R(s) \longrightarrow \boxed{\frac{K_a K (S^2 + W_z^2)}{S^2(S^2 + W_p^2) + K_a K (S^2 + W_p^2) K_r S + K_a K (S^2 + W_p^2)}} \longrightarrow \theta(s)$$

C11230-13 Figure 6-7

PROPELLANT RESPONSE TO THRUST MISALIGNMENT
Attitude / Time

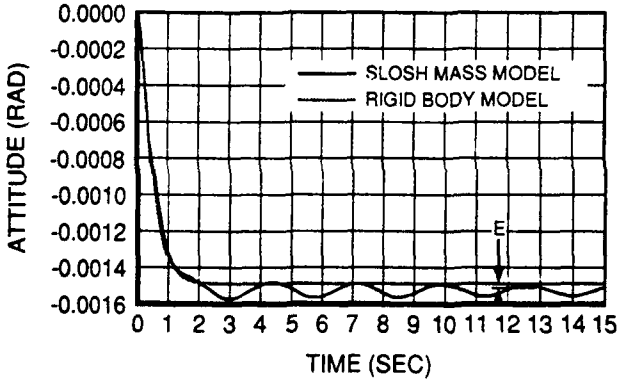

C11230-14 Figure 6-8

PROPELLANT RESPONSE TO THRUST MISALIGNMENT
Propellant Orientation / Time

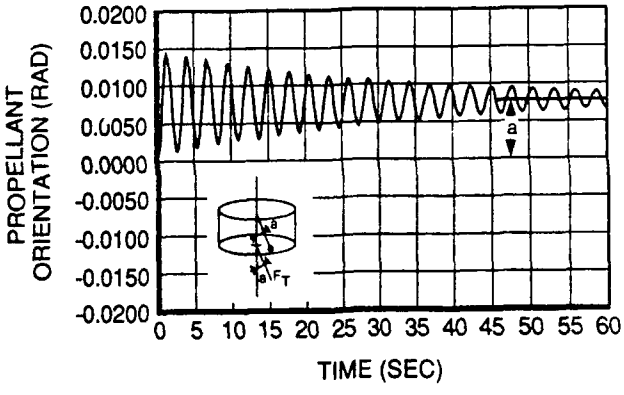

C11230-14 Figure 6-9

the anticipated thrust vector angular error and the steady-state attitude error of the control system. A direct summation of the attitude errors yields an attitude error of 5.3 degrees for the first ΔV maneuver and an error of 6.5 degrees for the second ΔV maneuver (includes bias stability error accrued during the coast phase). Based on these attitude errors the semi-major axis variation is found to be ±2 nm and the inclination error is estimated to be ±0.04 degree.

Table 6-3
TAS PRELIMINARY ERROR BUDGET

Error Source	Attitude Error (P/Y) (deg)
ΔV Attitude Error	±2.0
SUS / LV Alignment	±0.9
SUS / ARU Alignment	±0.5
Thrust Misalignment	±0.25
Sensor Error	
Scale Factor (0.2%)	±0.15
Bias Stability	±0.85

A preliminary estimate of the ACS GN_2 propellant requirements was made based on the anticipated maneuvers requiring ACS. These maneuvers included N_2H_4 settling, disturbance torque reaction during transfer maneuvers, tip-off rate elimination and reference state acquisition, reorientation, and limit cycling. For the propellant budget estimates the control torque limit was 75 in-lbf and the specific impulse of the GN_2 was 65 sec.

Presented in Table 6-4 is a summary of the GN_2 propellant requirements for the three-axis stabilized configuration. The table includes the type of maneuver, the number of maneuvers anticipated, and the total propellant required for each type of maneuver. The total ACS requirements for the TAS configuration is estimated to be 11.93 lbm.

Table 6-4
TAS GN_2 PROPELLANT BUDGET SUMMARY

Maneuver	Number of Maneuvers	GN_2 Requirement (lbm)
Tip-Off Elimination	1	0.15
N_2H_4 Setting	3	1.86
ΔV Maneuvers	2	8.70
Reorientation		
180°	3	0.60
90°	1	0.20
Anti-Collision (ΔV Maneuver)	1	0.25
Limited Cycle		
Coarse (±10° P/Y / R)	—	0.05
Fine (±0.1° P/Y, ±1°R)	—	0.12
Total		11.93

6.1.6 GN_2 Pressurization Results

An analysis was conducted to estimate the amount of GN_2 required to support the regulation function of the N_2H_4 propellant feed system. For this analysis the real gas properties of Nitrogen were used based on data from NBS Technical Note 648. Also, an adiabatic blowdown of the pressurant tank was assumed along with temperature recovery in both the pressurant and propellant tanks during the coast phase of the mission. The extent of the temperature recovery was based on results from the cold bias thermal analysis (see Section 6.3 for thermal analysis results). The propellant tank pressure is regulated until the pressurant level falls below the regulator set pressure at which time the propellant tank is assumed to operate in a blowdown mode.

Figure 6-10 presents the transient pressure profiles for both the propellant tank and the pressurant tanks. The profiles represent the transient behavior for the TAS configuration during a two burn maneuver. The total GN_2 consumed during the two burn maneuver was 13.7 lbm with 10.8 lbm going to perform ACS functions and 2.9 lbm for regulation. Post-SV separation ACS functions require approximately 1.1 lbm of GN_2 (for a total of 11.9 lbm of ACS propellant).The GN_2 required for regulation of the feed system pressure was found to be essentially independent of the configuration under consideration. Therefore, the total GN_2 requirement for the NCS/ARR configuration requires 15.3 lbm, The total capacity of the pressurant tanks is 15.8 lb at 5750 psia, which results in a GN_2 margin of 1.0 lbm and 0.5 lbm for the TAS and the NCS/ARR configurations, respectively.

6.2 STRUCTURAL ANALYSIS

6.2.1 Introduction

A structural analysis was performed on the SUS preliminary design. Objectives of the analysis were threefold:

1. Assess the structural integrity of the preliminary design primary structural subsystem relative to the design environments of the SUS Prime Item Development Specification.
2. Make initial estimates of the expected component vibration levels for use in component specification development.
3. Investigate the effects of payload weight and stiffness on the SUS primary structural subsystem.

The SUS Prime Item Development Specification imposed four structural design environments: random vibration (3.2.5.2.2), acoustics (3.2.5.2.3), pyroshock (3.2.5.2.4) and linear acceleration (3.2.5.2.5) and two additional structural constraints of the minimum allowable fundamental frequency (3.2.2.3) and maximum allowable limit load (3.2.5.2.6). An investigation into the relative severity of the design environments determined that the structural design would be driven by random vibration and steady-state acceleration. Accordingly, the preliminary design was analyzed for these two environments and the constraints of minimum fundamental frequency and maximum limit load.

Determination of payload mass and stiffness effects upon the SUS structural subsystem was accomplished by analyzing for several different payload configurations. Payload weights and

SUS Propulsion System Schematic

- 13.7 lbm GN_2 CONSUMED DURING TRANSFER MANEUVERS
  - ACS: 10.8 lbm, PROPULSION: 2.9 lbm
- 1.1 lbm GN_2 REQUIRED FOR POST-SV SEPARATION FUNCTIONS
- GN_2 MARGIN: 1.0 lbm
  - TOTAL GN_2 CAPACITY: 15.8 lbm

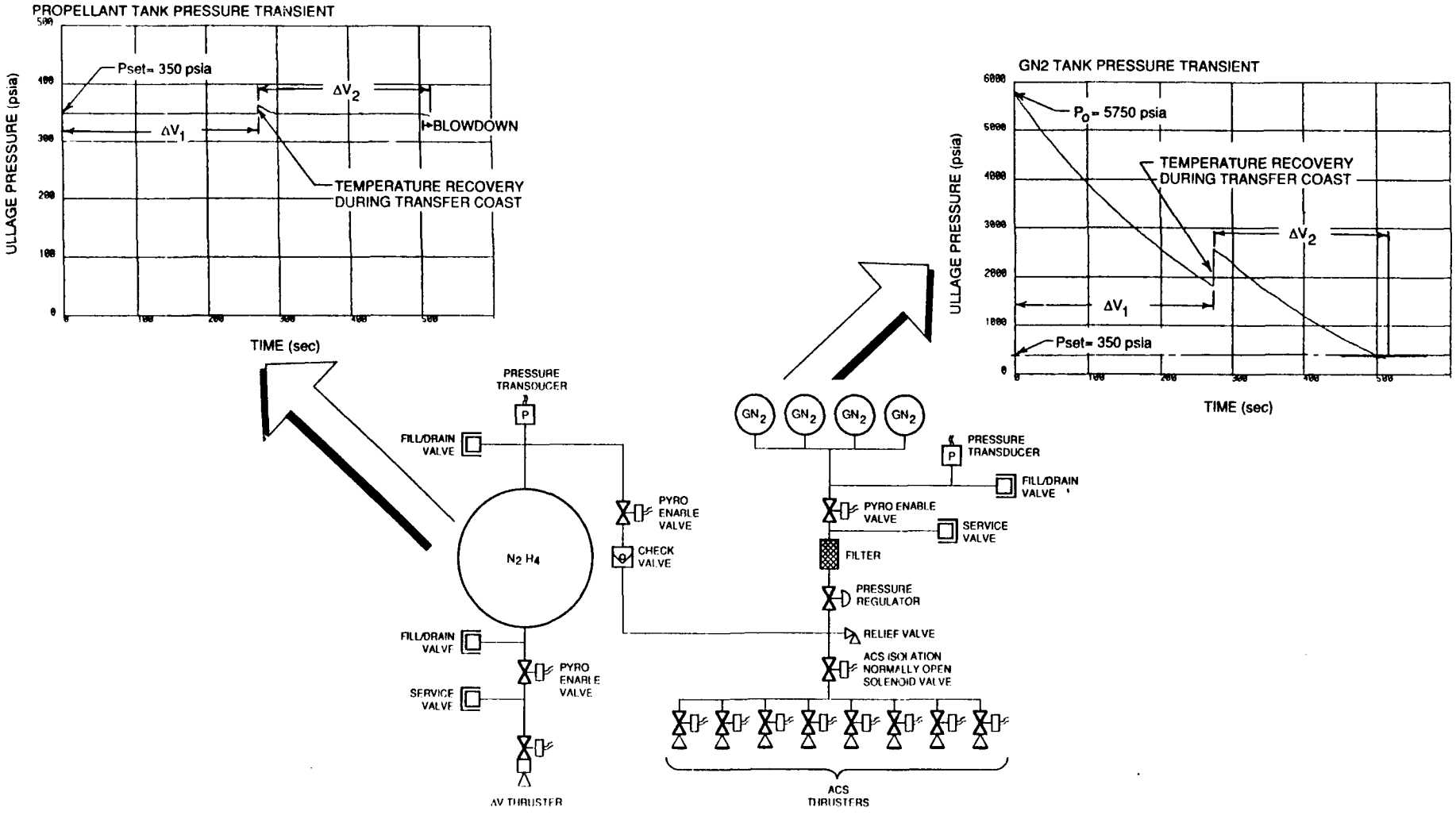

Figure 6-10

stiffnesses were chosen so as to bracket the range of possibilities in actual payload. A maximum payload weight of 400 lbm, mean weight of 260 lbm and light weight of 100 lbm were analyzed. A stiff payload configuration of 650 to 700 Hz frequency and flexible configuration of 6 to 7 Hz frequency were analyzed. Table 6-5 summarizes the payload configurations and corresponding analyses that were performed.

Table 6-5
SUS PRELIMINARY SYSTEM LEVEL STRUCTURAL ANALYSES

CONFIGURATION			ANALYSIS						
Payload			Acceleration			Natural Freq.	Random Vibration		
Weight[1]	Freq.[2]	Support	Stress	Defl.	Buckling		Stress	Defl.	Components
Maximum	Stiff	LV	X	X	X	X	X	X	X
Maximum	Flexible	LV	X	X		X	X	X	X
Light	Stiff	LV				X	X	X	X
Light	Flexible	LV				X	X	X	X
Mean	Stiff	LV				X			
Maximum	Stiff	Free-Free				X			

1 Max. = 400 lbm
Mean = 260 lbm
Light = 100 lbm

2 Stiff ~ 650 - 700 Hz
Flexible ~ 6 - 7 Hz

Figure 6-11 shows the finite element model used in the analysis. The eight principal structural ring and cylinder members were modelled with quadrilateral shell elements. It was determined through a parametric analysis that large changes in tank stiffness had little effect upon the stress levels or system frequencies of the total system. Accordingly, the tank was not modelled in detail. The connection of the structural members into the structural subsystem was accomplished with the use of rigid elements. Lumped masses representing the SUS components were rigidly connected to the structural subsystem at the appropriate cg locations to complete the full structural analysis model. Displacement constraints were applied in all directions at the LV interface flange (except for the free-free eigenvalue analysis). Steady-state acceleration load cases were analyzed as body forces and random vibration loading was applied as fully correlated specification levels at the LV interface flange.

6.2.2 Limit Load Analysis

The limit load stresses for each structural member were calculated as the maximum combination of steady-state acceleration and 3-sigma random vibration stresses. The stress summary table of Figure 6-12 shows the stresses in each structural member for maximum/light weight and stiff/flexible payload configurations. The maximum combination of stresses from this table, together with material allowables from DOD-HDBK 5E and safety factors from DOD-HDBK-343, were used to calculate the limit load margins of safety shown in Figure 6-12. All margins are positive with the lowest being 0.9 for yield in ring 6.

SUS Preliminary System Level Structural Analysis Model

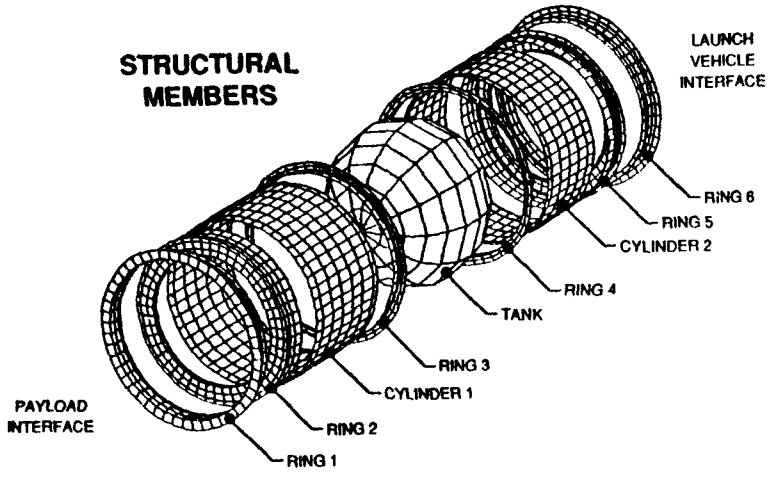

LUMPED MASS COMPONENTS

COMPONENT	WEIGHT (lbm)	QUANTITY
ECU	7.5	2
IMU	3.0	1
BATTERY	8.1	2
PCU	3.0	1
GN2 TANK	12.0	4
ACS THRUSTER	0.35	8
ΔV THRUSTER	1.95	1
SBAND TRANSMITTER	1.00	1
SBAND RECIEVER	2.35	1
PAYLOAD	100-400	1

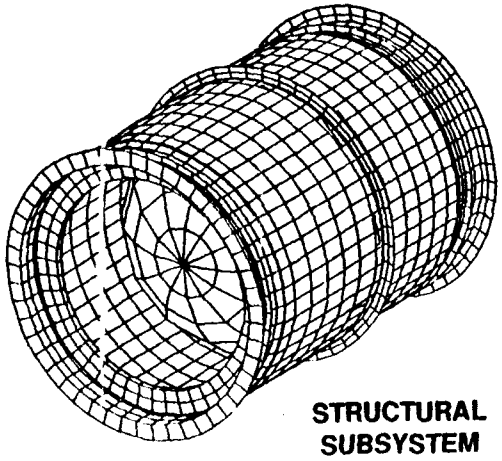

STRUCTURAL SUBSYSTEM

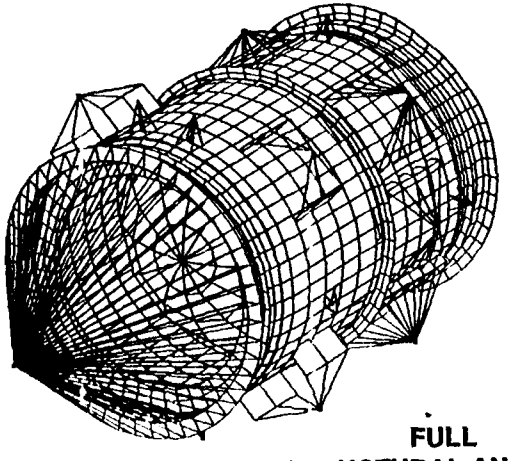

FULL STRUCTURAL ANALYSIS MODEL

MODEL SUMMARY

2695	ELEMENTS
3176	NODES
12,616	DEGREES OF FREEDOM

COMPONENTS WEIGHT =	93.3 lbm
HYDRAZINE TANK WEIGHT (FULL) =	190.5 lbm
STRUCTURAL WEIGHT =	94.2 lbm
TOTAL WEIGHT =	378.0 lbm
	+ PAYLOAD

C11229-83

Figure 6-11

SUS Preliminary System Level Limit Load Margins of Safety

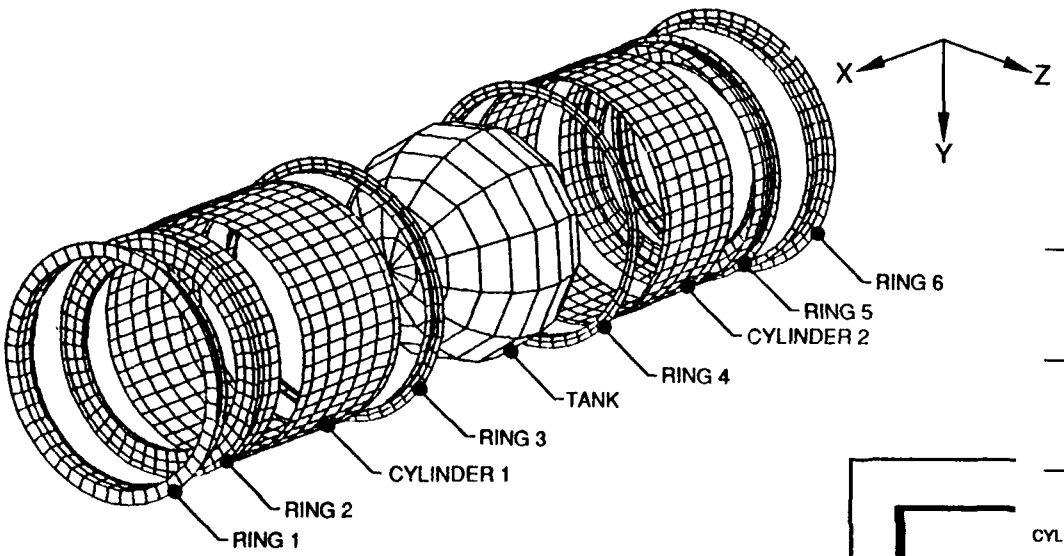

STRESS SUMMARY TABLE

	PAYLOAD		DETERMINISTIC 13 g's ACCELERATION		PROBALISTIC RANDOM VIBRATION (3σ)		
	WEIGHT	FREQ.	MAXIMUM VON MISE'S STRESS (ksi)	LOADING DIRECTION	MAXIMUM COMPONENT STRESS (ksi)	COMPONENT	EXCITATION DIRECTION
RING 1	MAX	STIFF	1.56	Z	1.47	X	X
		FLEX	11.34	Y	0.36	Y	X
	LIGHT	STIFF	-	-	0.84	X	Z
		FLEX	-	-	0.42	Z	Y
RING 2	MAX	STIFF	2.98	Y	3.81	Y	X
		FLEX	3.19	Z	2.37	Y	Y
	LIGHT	STIFF	-	-	2.16	Y	X
		FLEX	-	-	2.28	Y	Y
CYLINDER 1	MAX	STIFF	6.58	Y	7.44	Y	X
		FLEX	8.53	Y	7.60	Y	Y
	LIGHT	STIFF	-	-	5.61	Y	X
		FLEX	-	-	7.29	Y	Y
RING 3	MAX	STIFF	9.11	Y	8.40	X	Y
		FLEX	9.10	Y	7.80	X	X
	LIGHT	STIFF	-	-	8.34	X	X
		FLEX	-	-	7.80	X	X
RING 4	MAX	STIFF	10.36	Y	10.83	X	X
		FLEX	10.36	Y	8.22	X	X
	LIGHT	STIFF	-	-	9.06	X	X
		FLEX	-	-	8.25	X	X
CYLINDER 2	MAX	STIFF	9.00	Z	7.23	X	Z
		FLEX	9.04	Z	4.29	X	Z
	LIGHT	STIFF	-	-	6.24	X	Z
		FLEX	-	-	4.17	X	Z
RING 5	MAX	STIFF	8.26	Y	5.82	X	Y
		FLEX	8.26	Y	3.39	X	Y
	LIGHT	STIFF	-	-	5.28	X	Y
		FLEX	-	-	3.27	X	Y
RING 6	MAX	STIFF	13.42	Y	7.41	X	Y
		FLEX	13.40	Y	4.71	X	Y
	LIGHT	STIFF	-	-	6.93	X	Y
		FLEX	-	-	4.53	X	Y

MATERIAL ALLOWABLES
7075-T73/7351 ALUMINUM
MIL-HDBIK-5E

STRUCTURAL MEMBER	THICKNESS (in)	YIELD (ksi)	ULTIMATE (ksi)
RING 1	2.3	49	62
RING 2	3.56	46	57
CYLINDER 1	0.063	56	67
RING 3	1.24	57	67
RING 4	1.24	57	67
CYLINDER 2	0.063	56	67
RING 5	3.56	46	57
RING 6	2.3	49	62

LIMIT LOAD MARGINS OF SAFETY

STRUCTURAL MEMBER	MAXIMUM STRESS (ksi)	YIELD		ULTIMATE	
		SF	MS	SF	MS
RING 1	11.70	1.25	2.4	1.40	2.8
RING 2	6.79	1.25	4.4	1.40	5.0
CYLINDER 1	16.33	1.25	1.7	1.40	1.9
RING 3	17.51	1.25	1.6	1.40	1.7
RING 4	21.19	1.25	1.2	1.40	1.3
CYLINDER 2	16.23	1.25	1.8	1.40	1.9
RING 5	14.08	1.25	1.6	1.40	1.9
RING 6	20.83	1.25	0.9	1.40	1.1

C11229-82

Figure 6-12

Figure 6-13 shows the predicted deflections at the payload cg under limit load conditions. It is shown that the maximum contribution of deflection to the payload by the SUS flexibility (including the rigid body motion between the payload / SUS interface flange and payload cg) is 0.224 inches. Further incursions into the available payload fairing envelope would be the result of payload flexibility.

Figure 6-14 summarizes the results of a linear eigenvalue buckling analysis under steady-state acceleration. The critical acceleration levels to induce buckling in each direction is shown in Figure 6-14 with the corresponding buckling mode shape. With a maximum specification acceleration level of 13 g's, the lowest margin of safety is 1.1.

6.2.3 Natural Frequency Analysis

A linear eigenvalue analysis was performed with the structural model of Figure 6-11. Objectives of the eigenvalue analysis were to:

1. Determine the system first fundamental axial and lateral frequencies to verify conformance with the 15 Hz lateral and 35 Hz axial minimum frequency limits of the SUS Prime Item Development Specification.
2. Map out primary modes as an aid in vibration isolation feasibility studies and future development test activities.
3. Create a database of frequencies to 300 Hz for use in the modal superposition random vibration analysis.

Figure 6-15 summarizes frequency results for four payload configurations. The first fundamental lateral frequency is shown to be well above 15 Hz for payloads up to the maximum weight of 400 lbm. It is also shown that the system fundamental frequencies are in a range suitable for vibration isolation.

6.2.4 Component Level Random Vibration

Acceleration levels at the components for the maximum/light weight and stiff/flexible payload configurations are shown in the Component Level Random Vibration Summary Table of Figure 6-16. The acceleration spectral density for each component maximum grms payload configuration is shown plotted to the right. Similar curves were developed for maximum deflection levels. The component levels were developed to aid in preliminary component selection and design.

The ΔV REA and hydrazine tank have been qualified to levels higher than predicted. Preliminary review of the remaining component level vibrations indicate workable levels. Options of localized stiffeners and component vibration isolation remain open if required.

6.2.5 Summary

The primary structural subsystem has large margins of safety under acceleration and random vibration limit load conditions. The system first fundamental lateral and axial natural frequencies are above the specification requirement levels. Options such as rib stiffeners and additional cylinder thickness remain open and easily implemented if additional system

SUS Maximum Payload Deflections

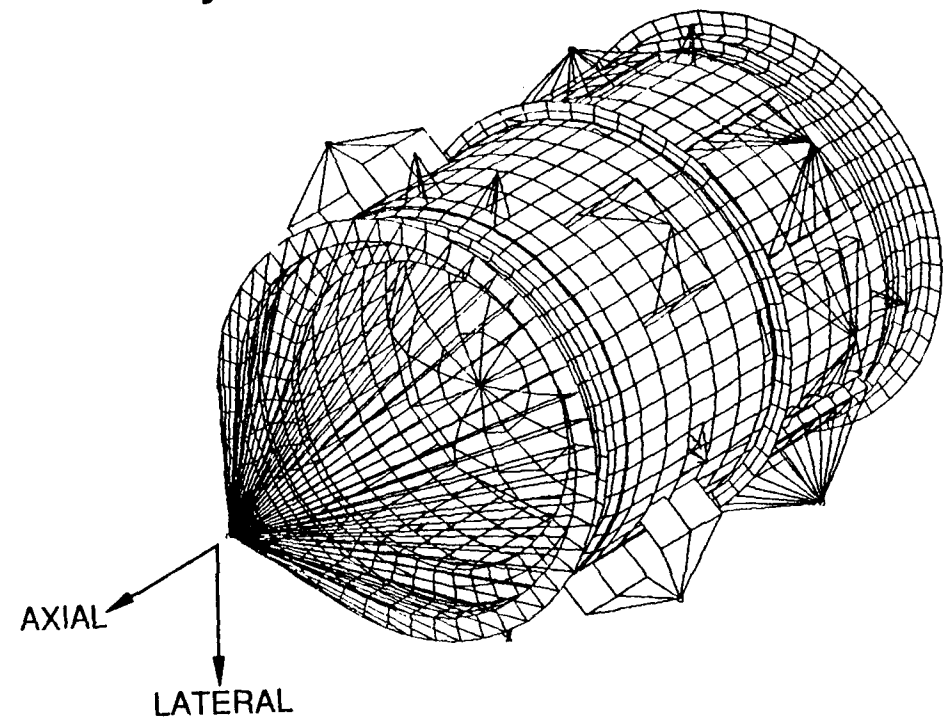

SUS CONTRIBUTES MAXIMUM OF 0.030 inch AXIAL AND 0.224 inch LATERAL RIGID BODY MOTION TO PAYLOAD

		Deflection (inch)					
		AXIAL			LATERAL		
Weight	Frequency	13 g's	3σ Random	Total	13 g's	3σ Random	Total
MAX.	STIFF	0.005	0.025	0.030	0.123	0.101	0.224
MAX.	FLEXIBLE	0.551	0.016	0.567	4.367	2.228	6.595
LIGHT	STIFF	—	0.023	—	—	0.075	—
LIGHT	FLEXIBLE	—	0.004	—	—	0.003	—

C11230-37

Figure 6-13

SUS Preliminary System Level Buckling Analysis

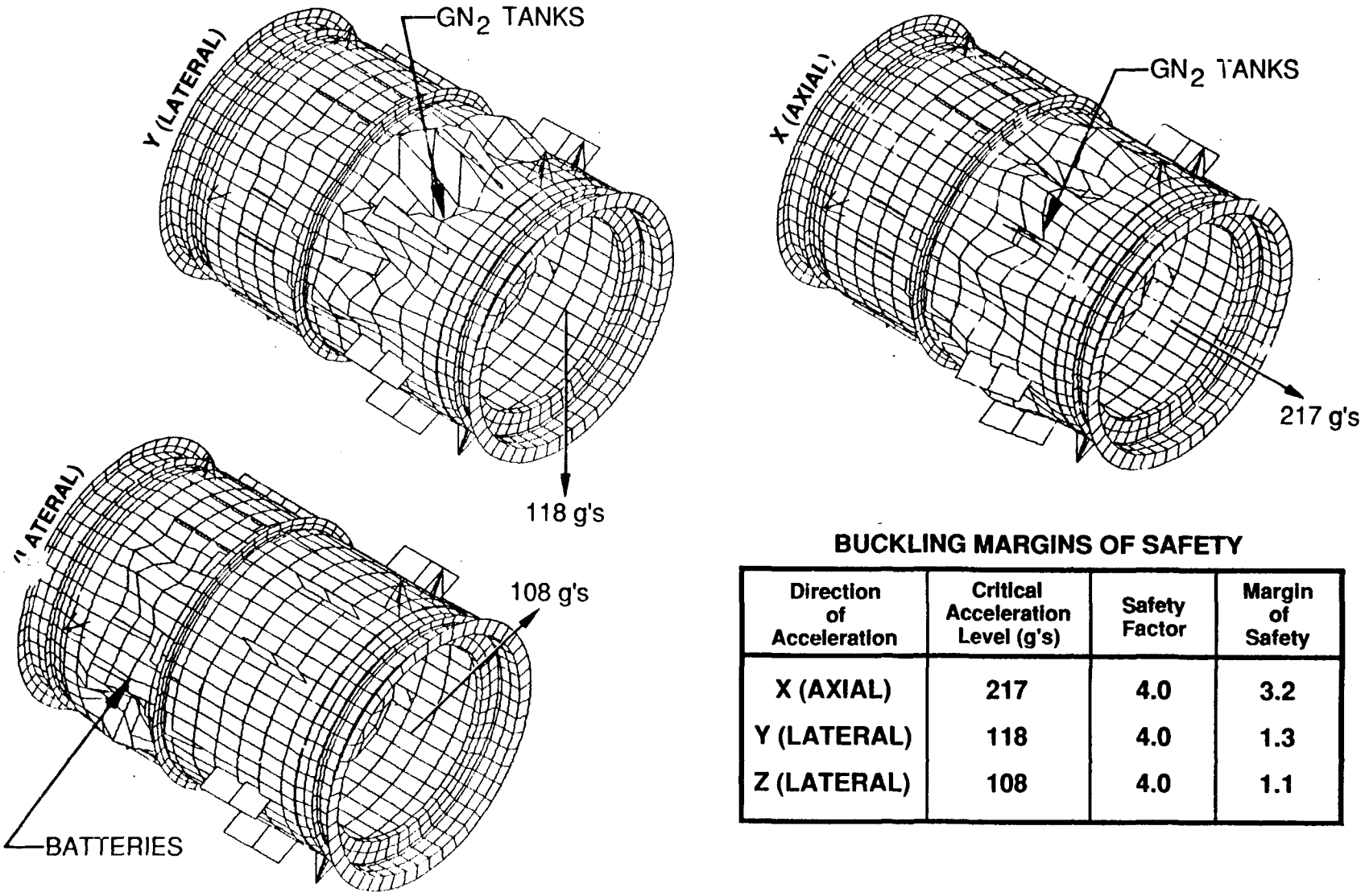

BUCKLING MARGINS OF SAFETY

Direction of Acceleration	Critical Acceleration Level (g's)	Safety Factor	Margin of Safety
X (AXIAL)	217	4.0	3.2
Y (LATERAL)	118	4.0	1.3
Z (LATERAL)	108	4.0	1.1

SUS Preliminary System Level Natural Frequency Analysis

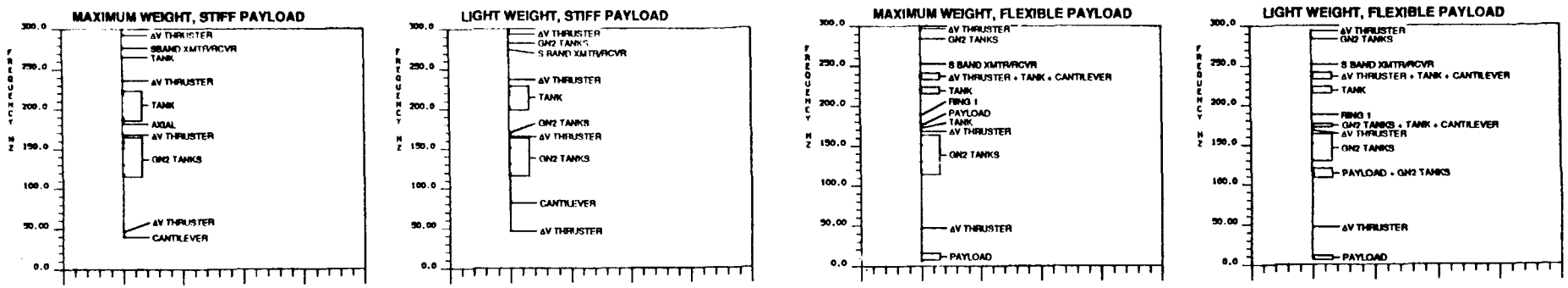

PAYLOAD		CANTILEVER
WEIGHT (lbm)	cg (in)	FREQUENCY (Hz)
100	42.0	81
260	47.5	52
400	51.5	40

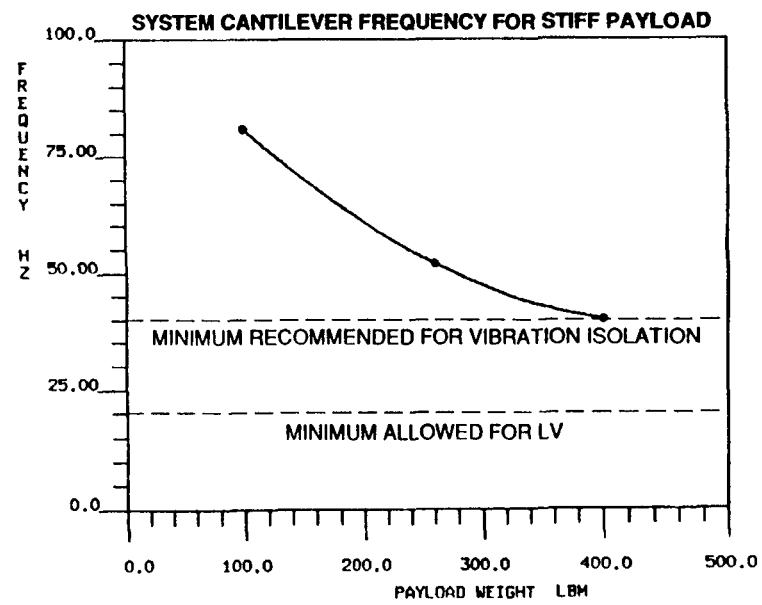

Figure 6-15

SUS COMPONENT LEVEL RANDOM VIBRATION

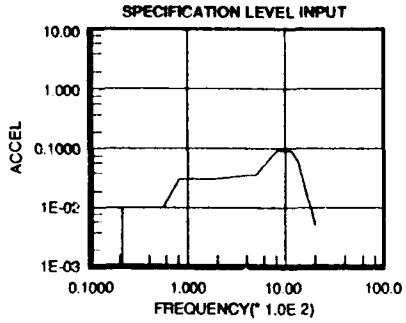

COMPONENT LEVEL RANDOM VIBRATION SUMMARY

		MAXIMUM 1σ ACCELERATION		
	WEIGHT	FREQ.	g's rms	DIRECTION
ECU	MAX.	STIFF	7.8	X
		FLEX	9.5	X
	LIGHT	STIFF	8.0	X
		FLEX	10.1	X
IMU	MAX.	STIFF	7.5	X
		FLEX	9.4	X
	LIGHT	STIFF	7.8	X
		FLEX	10.1	X
BATTERIES	MAX.	STIFF	7.8	X
		FLEX	9.3	X
	LIGHT	STIFF	7.9	X
		FLEX	10.0	X
PCU	MAX.	STIFF	7.5	X
		FLEX	9.2	X
	LIGHT	STIFF	7.5	X
		FLEX	9.9	X
GN_2 TANKS	MAX.	STIFF	9.6	X
		FLEX	14.5	Y
	LIGHT	STIFF	10.1	X
		FLEX	13.5	Y
ACS THRUSTERS	MAX.	STIFF	12.5	X
		FLEX	12.4	X
	LIGHT	STIFF	10.6	X
		FLEX	14.1	X
ΔV THRUSTER	MAX.	STIFF	11.6	X
		FLEX	11.6	X
	LIGHT	STIFF	10.8	X
		FLEX	11.9	X
S-BAND XMTR/RCVR	MAX.	STIFF	8.5	X
		FLEX	11.3	X
	LIGHT	STIFF	8.2	z
		FLEX	11.4	X
PAYLOAD	MAX.	STIFF	11.4	X
		FLEX	0.6	z
	LIGHT	STIFF	11.2	y
		FLEX	0.6	z

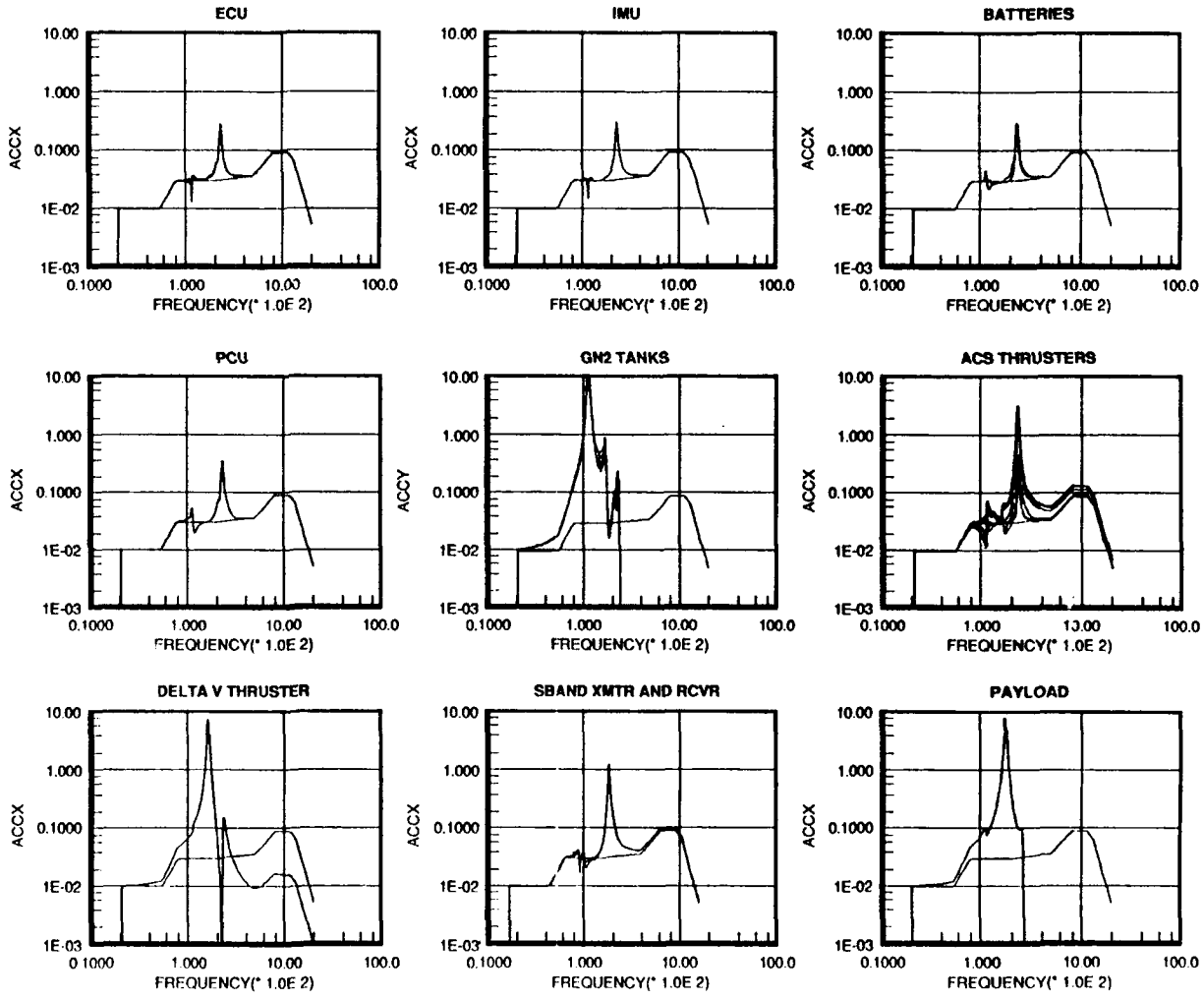

C11229-84

Figure 6-16

stiffness becomes necessary during the detailed design phase. Preliminary estimates of component vibrations indicate workable levels. Options such as localized stiffeners and component vibration isolators remain open if required.

The large margins of safety and high fundamental lateral and axial frequencies indicate that the primary structural subsystem is capable of supporting payloads in excess of the 400-lbm maximum weight assumed in the analysis. Additional analyses were performed that show positive margins of safety under limit-load conditions for a payload of 700 lbm. The lowest lateral frequency for the 700-lbm payload was calculated to be 30 Hz, still above the 15 Hz minimum lateral frequency called out in the SUS Prime Item Development Specification.

6.3 THERMAL ANALYSIS

The thermal analysis was performed to verify temperature control of the SUS. Analytical efforts were directed at determining the passive thermal control methods necessary to assure proper SUS temperatures, performance, mission duty cycle and hot restart operation. The vehicle PDR configuration is defined completely by RRC SK 31477 and specification requirements are defined by RRC-CS-0252.

6.3.1 Thermal Design Summary

The SUS PDR configuration thermal design satisfies all specification requirements and is compatible with performance and structural design requirements. Data presented in Table 6-6 shows that RRC has also achieved all design goals with favorable margins of safety for all combinations of operational modes and environmental conditions.

The RRC passive thermal approach incorporates a selective combination of conductive isolation and radiation surface emittance control. Operational heat input to the vehicle structure is effectively controlled in a manner that does not disturb the overall heat balance of the specified interface. Dissipation of decomposition heat energy to the vehicle and support structures, thruster valve components and deep space is distributed such that the valve seat, propellant line and injector temperatures are at acceptable levels for all combinations of simultaneous operational duty cycles and environmental conditions. The ΔV thruster can be safely restarted at any time during the specified mission.

The temperature range of all electronic components and batteries are favorably maintained without active heater circuits. An additional orbit thermal margin was successfully included in this analysis.

6.3.2 Thermal Design Objectives

Passive thermal management techniques combining conductive isolation and radiation emittance are employed to maintain the SUS components at acceptable temperature levels when the SUS vehicle is subjected to environmental temperature combinations and mission operation requirements. The RRC thermal design ensures the SUS PDR configuration will meet the objectives shown in Table 6-7.

Table 6-6
SUS THERMAL DESIGN SUMMARY

Cold Bias Conditions

Parameter	Intent	Design Limit	Predicted Results	Comments
Limit Propellant Valve Maximum Temperature	Avoid Valve Seat Overheat and Prevent Excessive Preheat	300°F	60.8°F	Valve is Conductively Attached to Mount Structure
Minimum Propellant Valve Temperature	Prevent Freezing	35°F	35.7°F	Worst Cold Case Without Solar, Earth Albedo or Earth IR Heating
Minimum Propellant Line Temperature	Prevent Freezing	35°F	39.9°F	Worst Cold Case
Propellant Tank	Passively Maintain Above Freezing	35°F	68.7°F	Worst Cold Case
Propellant Tank Ullage Gas	Maintain at Acceptable Level	–	21.4°F	Worst Cold Case
Electronic Components	Maintain at Acceptable Level	32°F 40°F 32°F	ECU 32.8°F ARC 42.8°F PCU 31.8°F	Worst Cold Case
Battery	Maintain at Acceptable Level	40°F	29.1°F	Worst Cold Case
GN_2 Gas	Maintain at Acceptable Level	–	-154°F	Worst Cold Case After Second ΔV Firing

Hot Bias Conditions

Limit Propellant Valve Maximum Temperature	Avoid Valve Seat Overheat and Prevent Excessive Preheat	300°F	138°F	Valve is Conductively Attached to Mount Structure
Minimum Propellant Valve Temperature	Prevent Freezing	35°F	80°F	Launch Pad Preconditioning
Maximum Propellant Line Temperature	Prevent Excessive Preheat	160°F	130°F	Worst Hot Case
Propellant Tank	Passively Maintain Above Freezing	35°F	82°F	Worst Hot Case
Propellant Tank Ullage Gas	Maintain at Acceptable Level	–	32°F	Worst Hot Case
Electronic Components	Maintain at Acceptable Level	140°F 140°F 140°F	98°F ECU 135°F ARU 114°F PCU	Worst Hot Case
Battery	Maintain at Acceptable Level	140°F	115°F	Worst Hot Case
GN_2 Gas	Maintain at Acceptable Level	–	-140°F	Worst Hot Case After Second ΔV Firing

Table 6-7
THERMAL DESIGN OBJECTIVES

• Passively Maintain SUS Propellant System Operating Temperatures at Acceptable Levels
• Prevent ΔV Thruster Overheating During Operation and Post Firing Soakback
• Maintain Electronic and Power Supply Components at Acceptable Operating Temperatures
• Provide Additional Orbit Thermal Safety Margin

6.3.3 Environmental and Operational Conditions

The range of environmental and operational conditions were defined in RRC-CS-0252. The worst cost combinations of vehicle, environmental and operational conditions are shown in Table 6-8.

Table 6-8
ENVIRONMENTAL AND OPERATIONAL CONDITIONS

• Cold Bias
  • Launch Pad Preconditioning – 70°F
  • No Payload Fairing Heating (Insulated) – 0 Btu / hr-ft^2
  • Free Molecular Heat Flux – 360 to 0 Btu / hr-ft^2 (2 minutes)
  • Deep Space Exposure After Fairing Ejection – -460°F
  • No Solar Heat Input
  • Minimum Voltage Supply
  • ΔV Firing and Soakback Heating

• Hot Bias
  • Launch Pad Preconditioning – 80°F
  • Payload Fairing Heating – 30 Btu / hr-ft^2 (3 minutes)
  • Free Molecular Heat Flux – 360 to 0 Btu / hr-ft^2 (2 minutes)
  • Deep Space Exposure After Fairing Ejection – -460°F
  • 450 Solar, 144 Earth Albedo, 80 Btu / hr-ft^2 Earth Mission Heat Input
  • Maximum Voltage Supply
  • ΔV Firing and Soakback Heating

6.3.4 Thermal Design Approach

The thermal design approach for the SUS vehicle passively combines multilayer insulation, conductive isolation and radiation emittance methods to maintain proper temperature control. A detailed thermal analysis of the vehicle has been completed for this effort. Results of these analyses are presented herein, where it is shown that the SUS vehicle thermal design meets all of the specified requirements with positive thermal margin. The SUS design accomplishes the following:

1. Maintains the catalyst bed temperature at a level sufficient to provide good start characteristics without active heaters.
2. Conductive attachment to the vehicle structure maintains the propellant valve and lines above the freezing point of hydrazine.

3. Prevents overheating of the propellant valves and injector stems during worst-cast duty cycle operation and/or from post-firing soakback.
4. Provides additional orbit passive operation.
5. Allows duty cycle operation of Hohmann transfer and contamination and collision avoidance maneuvers.

The thermal design approach for the SUS vehicle utilizes proven thermal management techniques. The passive thermal design features described in Table 6-9 and have been successfully employed on other recent programs such as ARCM, Centaur and Titan. The selected passive thermal control methods are compatible with the SUS mission environment and operational conditions specified.

Table 6-9
SUS PASSIVE THERMAL DESIGN FEATURES

Component	RRC Approach	Comments
Reactor Thermal Standoff	Provide controlled conductive resistance path between valve and reactor.	Limits post-firing valve heat soak, conserves heat energy to improve performance.
Injector Feed Tube	Minimize wall thickness.	Limits upstream heat transfer to capillary tube and minimizes hydrazine preheat during pulse.
REA Structure Mount Conductance	Mounts REA baseplate to vehicle with a low thermal resistance.	Couples REA to vehicle. Prorates heat transfer during nonfiring coast periods and directs heat input to vehicle during post-firing soak periods to protect valve.
Aluminum Skin / Structure	Iridite surface treatment.	Provides favorable radiation heat loss characteristic.
GN_2 Tanks	Electroless Nickel Plate	Minimize radiative heat transfer to space. Also promotes solar heating.
Propellant Valve Body	Natural Radiation Surface	Prevent high temperature during post-firing soakback periods.
Valve Mounting	Conductive coupling to structure.	Utilize direct thermal attachment to protect valve body.
Multilayer Insulation	Block propellant tank view to deep space.	Limits heat loss from tank during additional orbit period.
Propellant Tank	Natural radiation surface.	reduces heat loss during additional orbit period.

6.3.5 SUS Thermal Model

As a basis for analysis, a detailed thermal model of the SUS PDR design configuration has been developed with representative configuration networks as shown in Figures 6-17 and 6-18. These networks have been combined with the specified thermal interface data to conduct the thermal analyses.

SUS Thermal Model
(EXTERIOR VIEW)

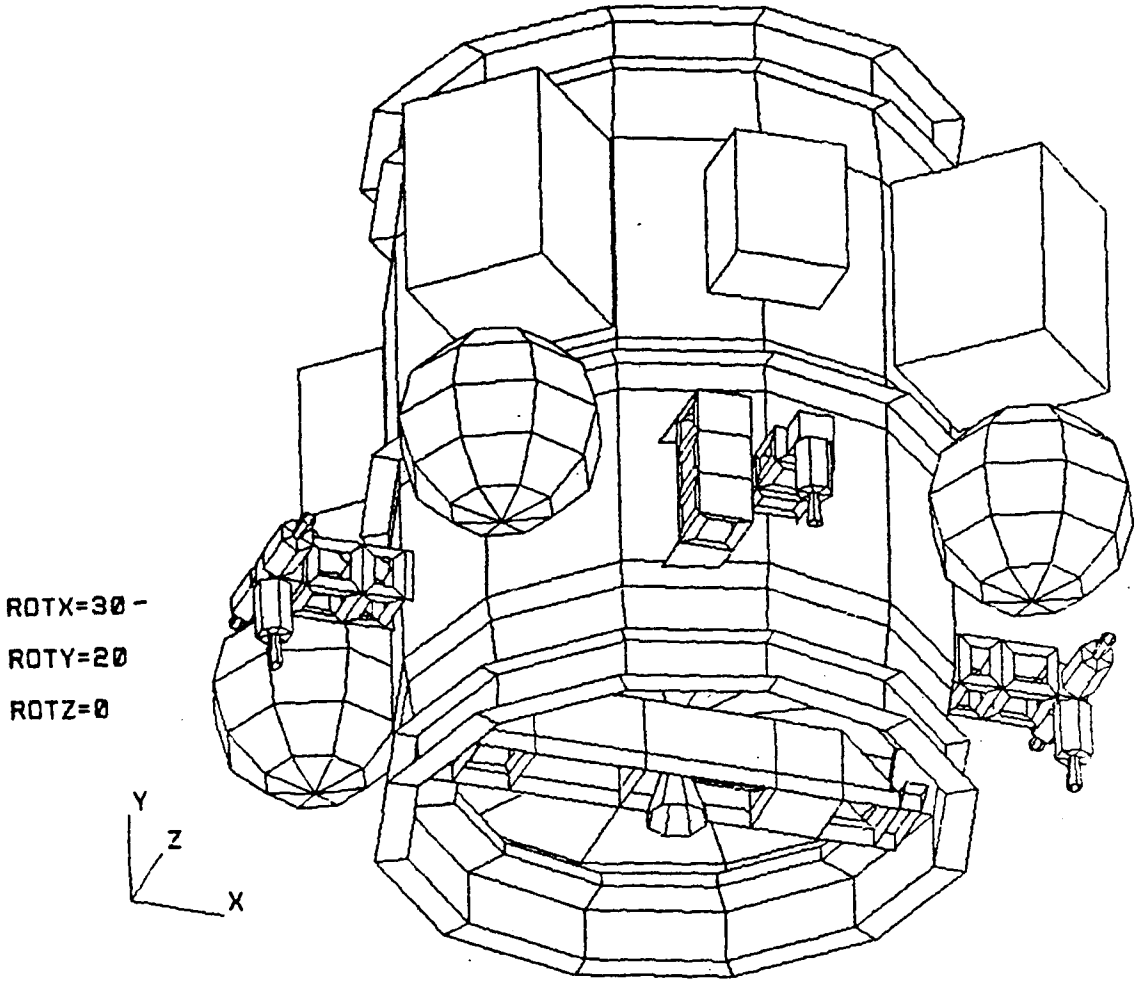

SUS Thermal Model
(INTERIOR VIEW)

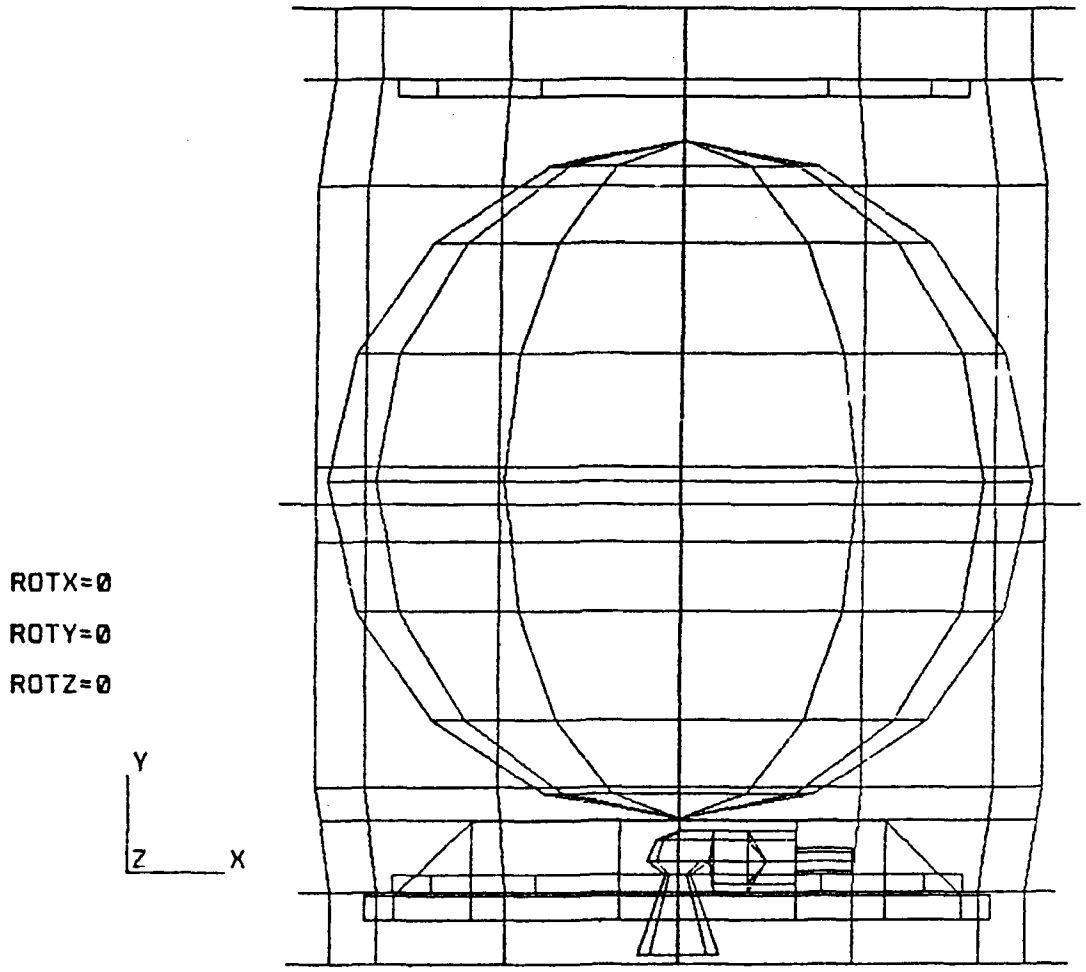

Figure 6-18

Additional thermal model features include:

1. Utilization of the thermal model TMG program with an RRC PRIME 6350 computer.
2. Resistance network allows for variation of thermal conductively with temperature.
3. Radiation networks are based on gray body enclosure methods.
4. Convection coefficients are based on traditional parameters (Re, Nu, Pr, etc.) for fluids flowing through tubes, packed beds and nozzles.
5. Steady-state temperature solutions are obtained through a rapidly converging relaxation technique.
6. Transient temperature solutions are obtained through a linear forward differencing scheme.

The above analytical methods and computational equipment have the flexibility to allow extensive parametric analyses and optimization of the thermal design. The REA design is relatively insensitive to material variations and manufacturing tolerances; however, analytical practice conservatively combines the most unfavorable manufacturing tolerances, extreme ranges of surface radiation emittances and temperature effects of thermal conductively for worst-case thermal predictions. These methods and equipment are baseline industry standards and have proven successful in past and on-going RRC aerospace programs.

6.3.6 Thermal Analysis Results

Figures 6-19 and 6-20 are representative examples of the cold case transients. Note that the cold bias conditions do not include launch aerodynamic, direct solar or Earth heat inputs and are, therefore, conservative. Figures 6-21 and 6-22 are representative examples of the hot case transients. Both hot and cold analytical conditions included the additional orbit representing flight thermal margin. All component temperatures are shown to be in a favorable range. The thermal design will allow the SUS vehicle to passively perform as intended.

6.3.7 Thermal Design Conclusions

All thermal design objectives and specification requirements for the SUS PDR design configuration have been met with positive thermal margin. Table 6-10 summarizes the capabilities of the RRC thermal design.

Table 6-10
SUS THERMAL DESIGN CONCLUSIONS

• The SUS Thermal Design can be Exposed to the Full Range of Hot and Cold Environmental Conditions
• ΔV Thruster Meets the Operational Requirements
• Propellant Tank Lines and Related Valves are Passively Maintained at Operational Levels Throughout Mission
• Electronic and Power Supply Components are Passively Maintained at Acceptable Levels Throughout Mission
• Thermal Analysis Includes a Margin of Additional Orbit. The Thermal Analysis is, Therefore, Very Conservative

SUS COMPONENT TEMPERATURES

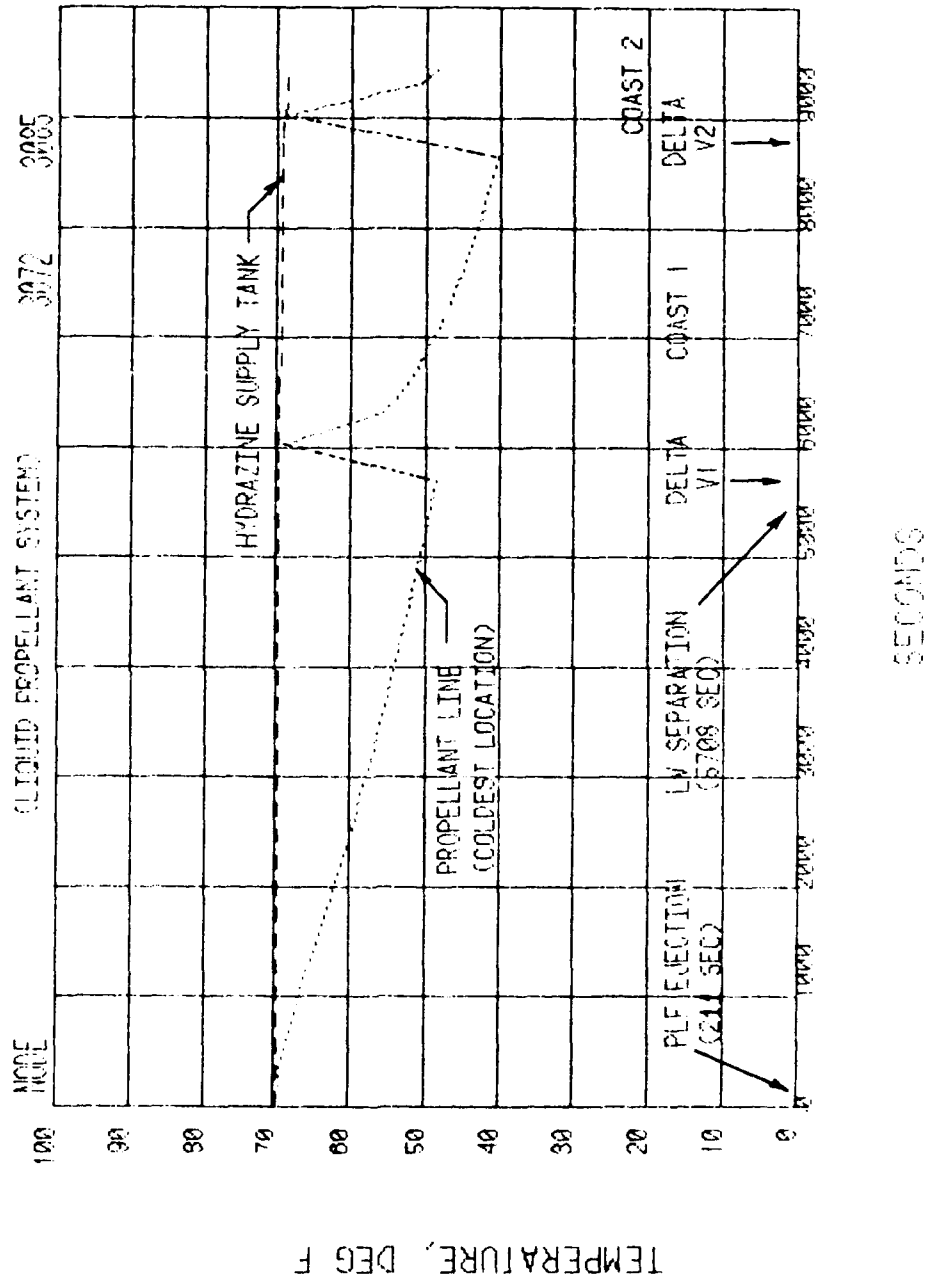

Figure 6-19

SUS COMPONENT TEMPERATURES

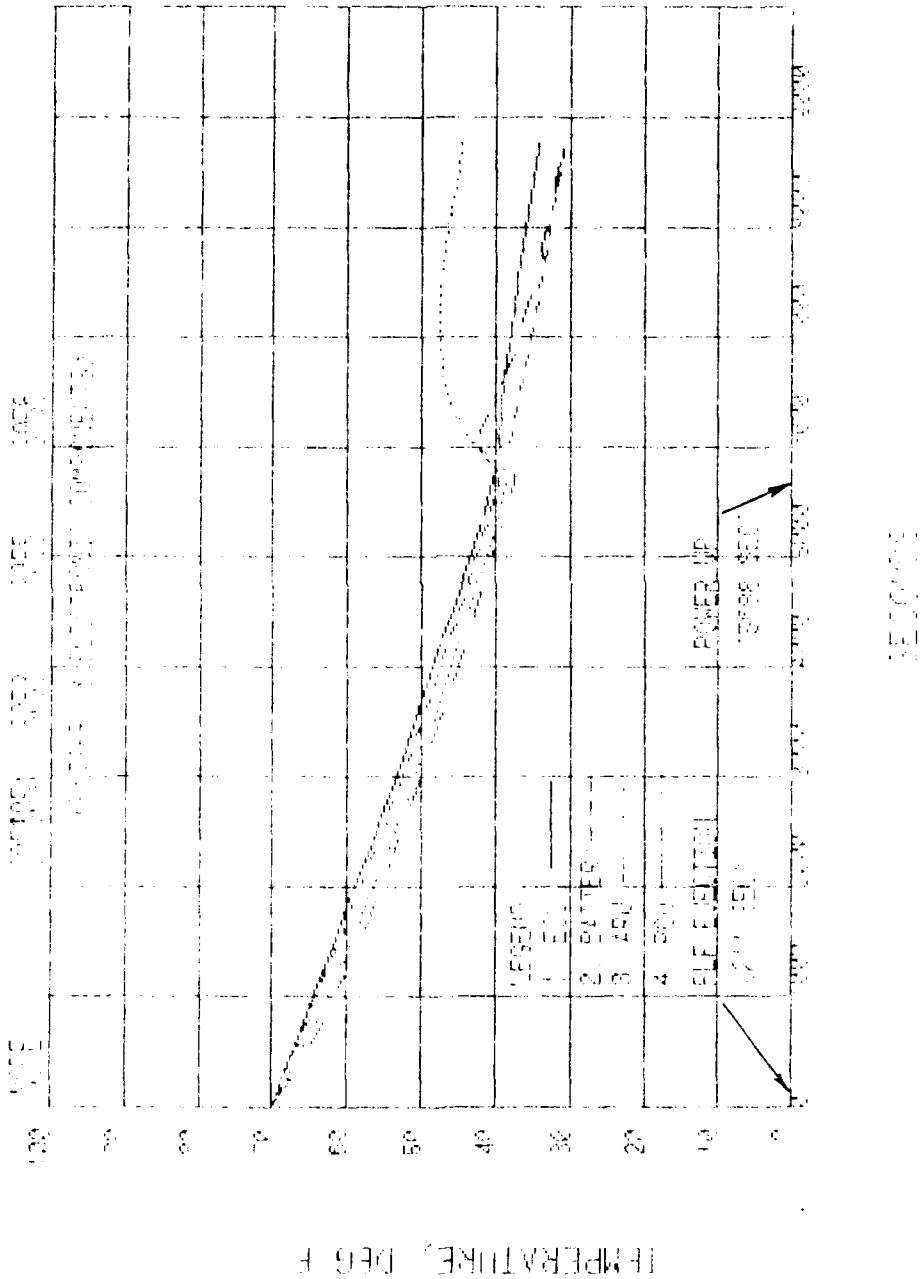

Figure 6-20

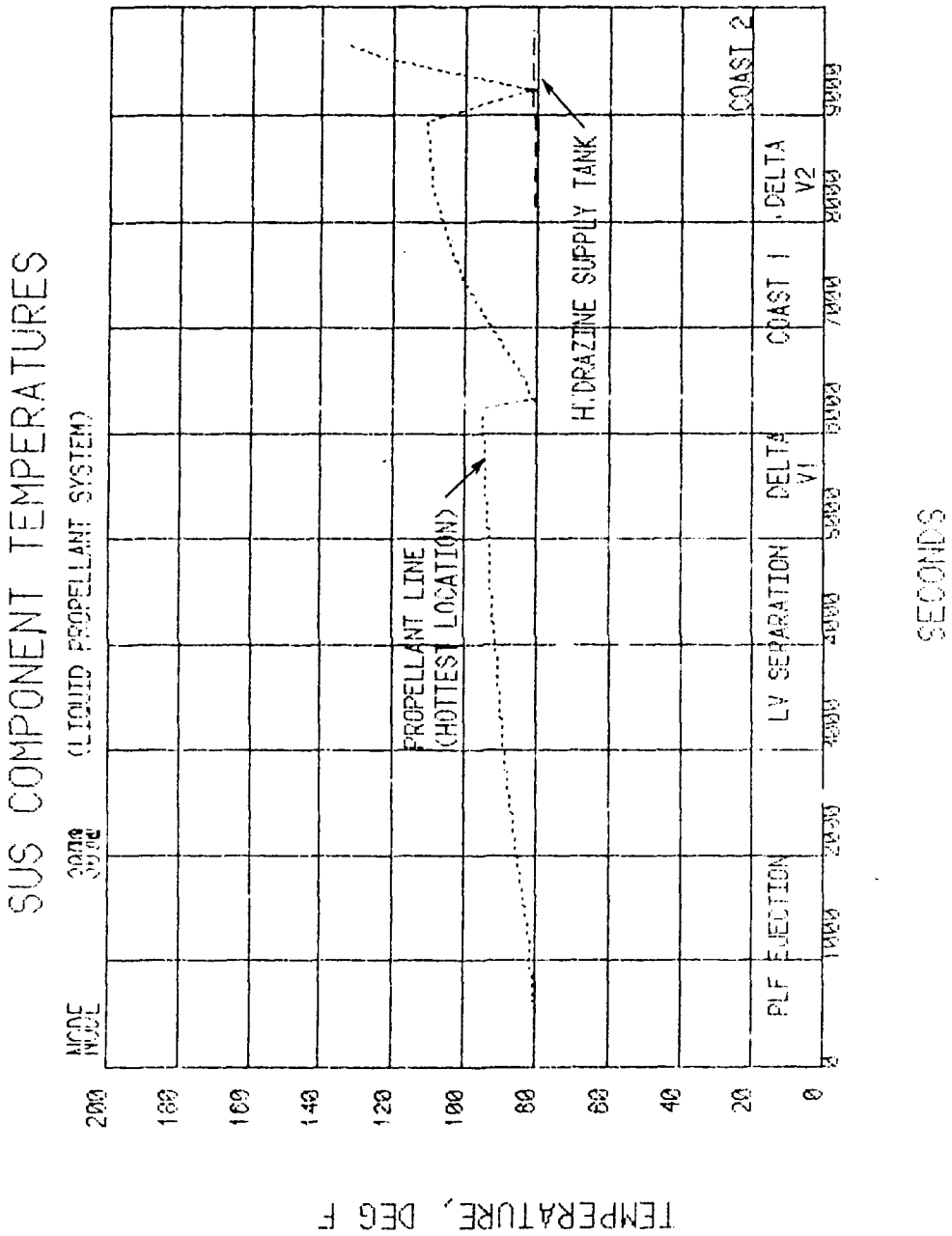
SUS COMPONENT TEMPERATURES
(LIQUID PROPELLANT SYSTEM)
NODE
PROPELLANT LINE
(HOTTEST LOCATION)
HYDRAZINE SUPPLY TANK
PLF EJECTION
LV SEPARATION
DELTA V1
COAST 1
DELTA V2
COAST 2
SECONDS
TEMPERATURE, DEG F
0
20
40
60
80
100
120
140
160
180
200
1000
2000
3000
4000
5000
6000
7000
8000
9000

Figure 6-21

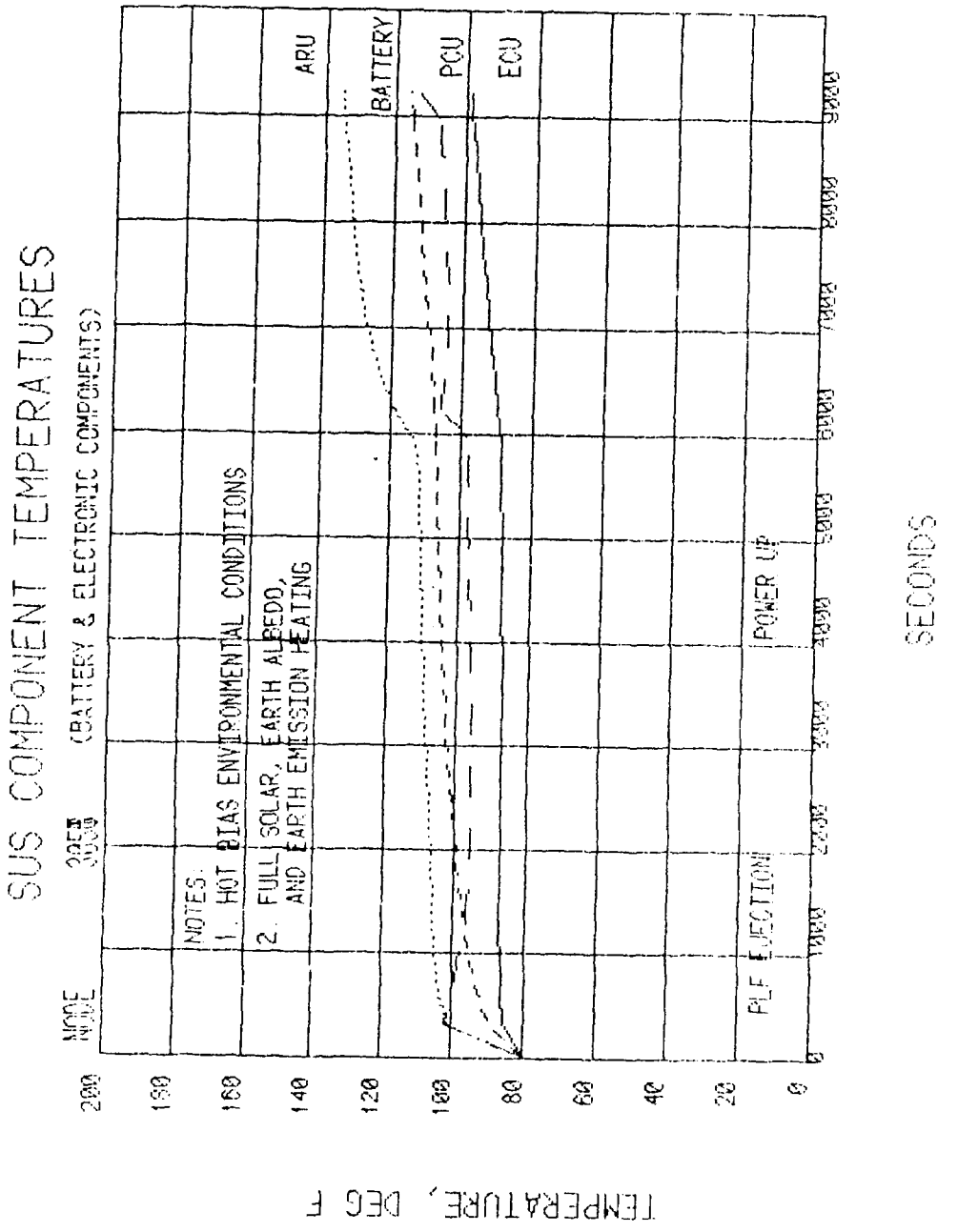
SUS COMPONENT TEMPERATURES
(BATTERY & ELECTRONIC COMPONENTS)
MODE
NOTES:
1. HOT BIAS ENVIRONMENTAL CONDITIONS
2. FULL SOLAR, EARTH ALBEDO, AND EARTH EMISSION HEATING
ARU
BATTERY
PCU
ECU
FLF EJECTION
POWER UP
TEMPERATURE, DEG F
SECONDS
200
180
160
140
120
100
80
60
40
20
0

Figure 6-22

6.4 RELIABILITY

6.4.1 Introduction/Summary

A reliability prediction has been performed on the SUS design to assure the 0.95 probability of success requirement is satisfied. The analysis predicts an SUS reliability of 0.960, exceeding the specification requirement.

Reliability, mission success and probability of success (Ps) all have the same meaning and are defined as: all component functions operating correctly to insert the secondary payload into the proper orbit without affecting the launch of the primary payload.

6.4.2 Design Approach

A single string design was utilized, with limited use of redundancy, to minimize the production costs of the SUS.

Flight qualified off the shelf fill / drain valves were selected for use on the SUS. These parts have caps that are torqued in place after operations to provide a redundant seal against external leakage. The redundant caps increase the level of safety for ground operation after the tanks have been fueled, decreasing the chances of a hazardous event.

The separation system has a redundant separation mode as a consequence of the pin design chosen to introduce tension bolt loads in the manacle ring. In the event a bolt cutter failed to actuate the actuation of the remaining bolt cutter and the rotation of the manacle ring halves about the unactuated joint allows for separation of the vehicles.

A normally open isolation valve, upstream of the 8 ACS valves, could be utilized to provide redundancy in the event of ACS valve leakage. The ACS valve reliability model assumes a hydraulic valve leaking failure mode distribution of 57 percent as documented in RADC's NPRD-3. Without the isolation valve, the SUS predicted reliability is 0.958700 versus 0.960178 with the isolation valve. During the detail design, the added complexity of fault detection needed to utilize the isolation valve in the event of ACS valve leakage needs to be investigated and compared to its possible reliability advantages.

6.4.3 Reliability Model

A reliability model (Figure 6-23) was prepared based on the SUS hardware configuration and functional requirements. The reliability model consists of a reliability block diagram and the mathematical model that was derived from the block diagram. The reliability block diagram represents a systematic arrangement of functions that must be performed for successful completion of the mission. By convention, redundant functions are shown in parallel. Nonredundant functions are shown in series. Dashed lines around the blocks represent subassemblies. In general, where more than one part is grouped within a block, the success of all the parts is required for successful operation of the block.

Each block of the reliability block diagram is identified by a block number and part name to provide traceability between the elements of the mathematical model, the reliability block diagram and the hardware parts.

SUS RELIABILITY MODEL

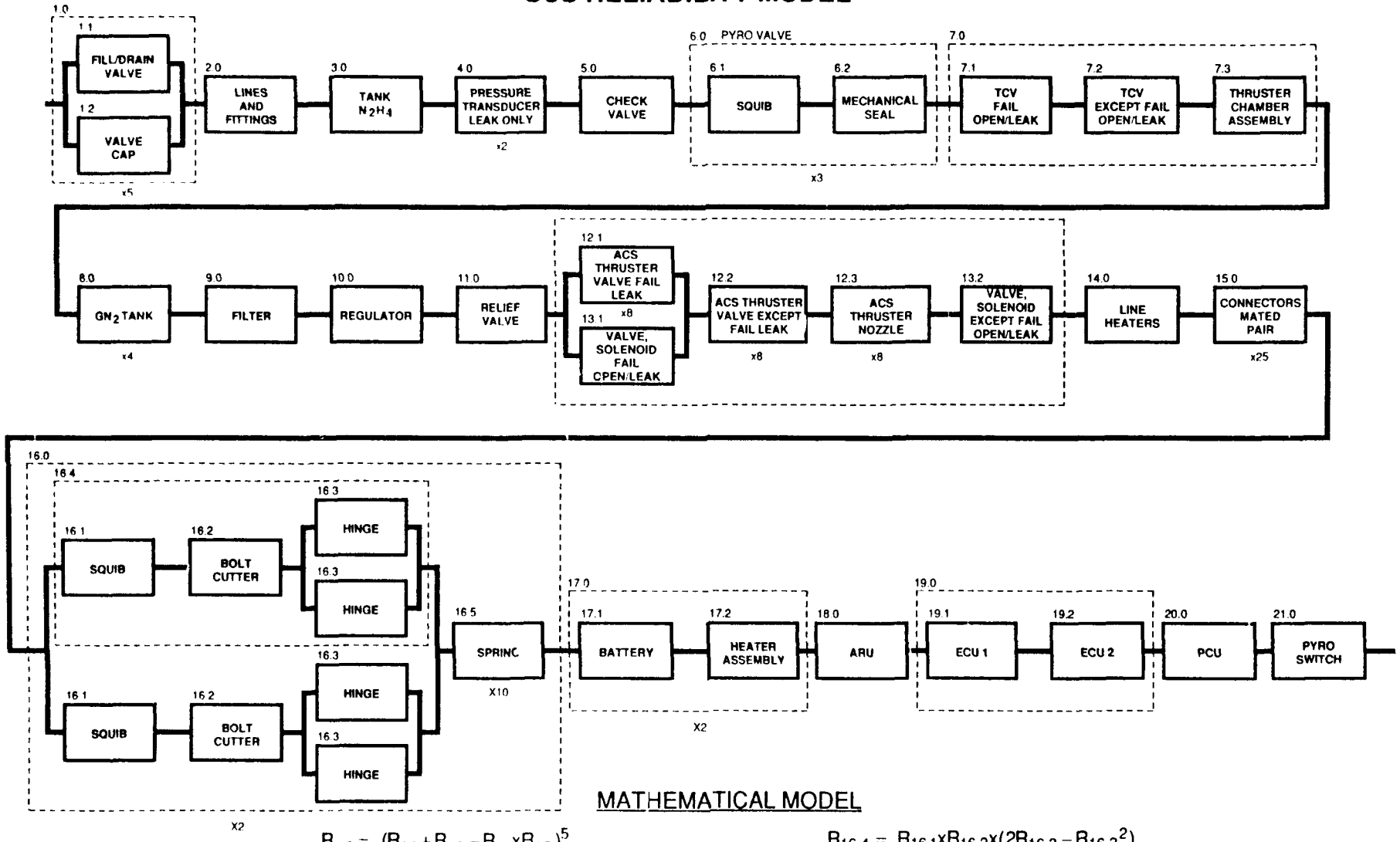

MATHEMATICAL MODEL

$$R_{1.0} = (R_{1.1} + R_{1.2} - R_{1.1} x R_{1.2})^5$$

$$R_{6.0} = (R_{6.1} x R_{6.2})^3$$

$$R_{7.0} = (R_{7.1} x R_{7.2} x R_{7.3})$$

$$R_{12.0} = (R_{12.1}{}^8 + R_{13.1} - R_{12.1}{}^8 x R_{13.1}) x R_{12.2}{}^8 R_{12.3}{}^8 R_{13.2}$$

$$R_{16.4} = R_{16.1} x R_{16.2} x (2R_{16.3} - R_{16.3}{}^2)$$

$$R_{16.0} = ((2R_{16.4} - R_{16.4}{}^2) x R_{16.5}{}^{10})^2$$

$$R_{17.0} = (R_{17.1} x R_{17.2})^2$$

$$R_{19.0} = R_{19.1} x R_{19.2}$$

$$R_{0.0} = R_{0.0} = R_{1.0} x R_{2.0} x R_{3.0} x (R_{4.0})^2 x R_{5.0} x R_{6.0} x R_{7.0} x (R_{8.0})^4 x R_{9.0} x R_{10.0} x R_{11.0} x R_{12.0} x R_{14.0} x (R_{15.0})^{25} x R_{16.0} x R_{17.0} x R_{18.0} x R_{19.0} x R_{20.0} x R_{21.0} = 0.960$$

Figure 6-23

A computer program is utilized for the reliability predictions. The computer printout presents the prediction failure rate data in tabular format using the column headings shown in Table 6-11. Mathematical symbols, formulas and units of measure associated with the data listed in each column of the printout are also presented.

The block reliabilities are summarized in Table 6-12. They are determined by modifying generic failure rates for SUS environmental stresses, operating conditions and mission profile.

The mission profile for the SUS was divided into six phases which are identified in the analysis as Phases A through F. Phase A, long-term storage, is a 2-year period in protected storage. Phase B, flight ready, is a 4-month period with propellant loaded and the batteries wet. Phase C, launch, is a 519 second period from liftoff until primary payload separation. Phase D is nonoperating space flight of 1.5 hours. Phase E is a 1-hour period from launch vehicle separation to completion of the SUS orbit transfer operation. During Phase E, blocks 17.0 through 20.0 of Figure 6-23 are active. Phase F represents the operating cycles of each component. The cycles are as follows: pyro activated components have one cycle, ACS valves are estimated to have 1640 cycles per valve, ΔV thrusters has 3 cycles and the isolation valve is estimated to have 13,120 cycles.

To provide an objective and consistent failure rate data base, the piece-part generic failure rates were selected from available military failure rate data sources used with the appropriate environmental failure rate modification factors.

Failure rate data used for this analysis have been taken from SAMSO-specified failure rate tables used on various programs (e.g., IUS, Fleet SATCOM, etc.), the AVCO reliability engineering data series document, "Failure Rates" and the Rome Air Development Center, RAC documents NPRD-3, nonelectronic parts reliability data. Dormant environment failure rate data was also reviewed in selecting storage failure rates. If storage failure rate data were not available, the generic failure rate used for the flight phase was modified with a quiescent adjustment factor (K_A) of 0.01 where engineering judgement deemed it to be appropriate. These generic failure rates were modified by an environmental factor (K_E) of 36 during the launch phase to account for the high stress levels experienced. The environmental factor selected for the launch phase was based on a review of environmental factors given in MIL-HDBK-217E. MIL-HDBK-217E gives a missile launch environmental factor varying from 6.5 to 210 for various parts. The MIL-HDBK-217E Section median value of 36 was used. During the two years of protective storage in a benign ground environment, a K_E of 0.5 accounts for the conservative assumption that only 50% of the failures that occur during this phase are identified and repaired. During the four month flight-ready environment, a K_E of 2.4 was selected to represent a somewhat more stressful environment than during long-term storage.

Table 6-11

COMPUTER PRINTOUT, TABLE RELATED FORMULAS RELIABILITY BLOCK FAILURE RATE DATA

BLK #	RELIABILITY BLOCK TITLE	QTY	GENERIC FAIL RATE / MILLION MISSION	PHASE CODE, MISSION	MODIF. FACTOR KE	MODIF. FACTOR KA	NUMBER OF HRS ON CYS PER MISSION	FAILURES / MILLION MISSIONS (PHASE)	MISSION FAILURES PER MILLION MISSIONS	BLOCK RELIABILITY
Math Symbols:		n	λ_G		K_E	K_A	T	λ_P	X_i	R
Formulas:		—	—		—	—	—	$\lambda_P = n\gamma_G K_E K_A T$	$x_i = \sum_{P=A}^{F} \lambda_P$	$R = e^{-Xi}$
Units: Phase A through E		—	Failures per Million Hours	A thru E	—	—	Hours per Mission	Failures per Million Missions	Failures per Million Missions	
Phase F		—	Failures per Mission Cycles	F	—	—	Cycles per Mission	Failures per Million Missions		

Table 6-12
SUS RELIABILITY BLOCK DATA AND PREDICTION

Blk #	Reliability Block Title	Block Rel	QTY	Assy Rel
1.0	FILL DRAIN VALVE AND CAP	1.000000	5	0.999999
1.1	FILL DRAIN VALVE	0.999503		
1.2	VALVE CAP	0.999503		
2.0	TUBES	0.999787	1	0.999787
3.0	TANK, N2H4	0.999148	1	0.999148
4.0	PRESSURE TRANSDUCER (LEAK)	0.999986	2	0.999972
5.0	CHECK VALVE	0.999836	1	0.999836
6.0	PYRO VALVE	0.999609	3	0.998827
6.1	SQUIB	0.999616		
6.2	MECHANICAL SEAL	0.999993		
7.0	DELTA V THRUSTER	0.999633	1	0.999633
7.1	TCV (OPEN/LEAK)	0.999762		
7.2	TCV (EXCEPT OPEN/LEAK)	0.999878		
7.3	THRUSTER CHAMBER ASSEMBLY	0.999994		
8.0	GN2 TANK	0.999148	4	0.996596
9.0	FILTER	0.999967	1	0.999967
10.0	REGULATOR	0.998031	1	0.998031
11.0	RELIEF VALVE	0.999147	1	0.999147
12.0	ACS AND ISOLATION VALVE	0.997774	1	0.997774
12.1	ACS THRUSTER VALVE (LEAK)	0.999787		
12.2	ACS THRUSTER VALVE (EXCEPT LEAK)	0.999839		
12.3	ACS THRUSTER NOZZEL	0.999903		
13.1	VALVE, SOLENOID ISOLATION (OPEN/LEAK)	0.999676		
13.2	VALVE, SOLENOID ISOLATION (EXCEPT OPEN/LEAK)	0.999833		
14.0	LINE HEATERS	0.999998	1	0.999998
15.0	CONNECTORS, MATED PAIR	0.999999	25	0.999975
16.0	DEPLOYMENT	0.999826	2	0.999652
16.1	SQUIB	0.999616		
16.2	BOLT CUTTER	0.999616		
16.3	HINGE	0.999984		
15.4	SQUIB, CUTTER, AND HINGE JOINT	0.999232		
16.5	SPRING	0.999826		
17.0	BATTERIES	0.999848	2	0.999696
17.1	BATTERY	0.999850		
17.2	HEATER BATTERY	0.999998		
18.0	ARU	0.992094	1	0.992094
19.0	ECUs	0.983033	1	0.983033
19.1	ECU 1	0.990929		
19.2	ECU 2	0.992031		
20.0	PCU	0.996593	1	0.996593
21.0	PYRO SWITCH	0.999800	1	0.999800
0.0	SMALL UPPER STAGE			0.960178

7.0 TEST PLAN

The purpose of creating the test plan was to identify a cost effective means of developing, qualifying and acceptance testing the SUS design. The test flow plan shown in Figure 7-1 presents the test plan established to meet this objective. It was created by prudently tailoring the requirements of DOD-HDBK-343 (Design, Construction, and Testing Requirements For One of a Kind Space Equipment) and MIL-STD-1540B (Test Requirements for Space Vehicles) to the low cost generic nature of the SUS design. The costs are further reduced by the use of flight proven components (thus eliminating nonrecurring testing) and the use in-house test facilities (to shorten and simplify testing).

The development testing is divided into subsystem and system level tests. The ACS, Command and Control, Power and Separation flow plans are shown in Figures 7-2 thru 7-5. The hardware developed in these series will be used in subsequent system development testing. No propulsion subsystem testing is required because the components are flight proven under similar requirements. The structural subsystem will be tested as part of system level development tests. The development system test flow plan is shown in Figure 7-6. The system testing will provide the following; structural and thermal model correlation, verification of EMI/EMC, Thermal Vacuum and launch loads capabilities, and post environmental performance verification. At the completion of the development tests the system will be upgraded and modified to flight configuration and will be used for qualification tests.

The qualification test plan will verify that the SUS is capable of passing the flight environment and then meeting the specification performance requirements all without degradation to the SUS performance. This will be accomplished according to the test flow plan shown in Figure 7-7. The SUS strength requirements will be verified by random vibration, sine-burst superimposed on random vibration(simulates limit load condition) and LV pyroshock. The LV pyroshock testing may be replaced by SUS separation subsystem induced pyroshock testing if it is shown to be more severe. (Note: SUS induced pyroshock will be measured during development) The performance verification testing will demonstrate specification compliance by performing all of the baseline mission operations. The SUS acceptance testing is performed before and after the environmental and performance verification testing to verify that no system degradation occurs as a result of these tests.

The acceptance testing will consist of verifying the SUS status ("health check of component and subsystems"), mission simulation and a low level random vibration test. Ground support equipment and software will be developed to perform the tests. As part of the system health check the internal and external leakage will be measured and a proof pressure test conducted. The low level random vibration will only be performed on each subsequent production SUS.

Following structural testing the ACS, command and control, thermal and power subsystem will be add to enable EMI and thermal vacuum testing. Completion of the subsystem integration and acceptance testing will yield a fully functional SUS. Thermal vacuum testing will be in accordance with MIL-STD-1540 tailored to the SUS mission. Separation subsystem functional test will verify that no degradation has occurred as a result of the structural and thermal testing.

SUS Program Test Plan

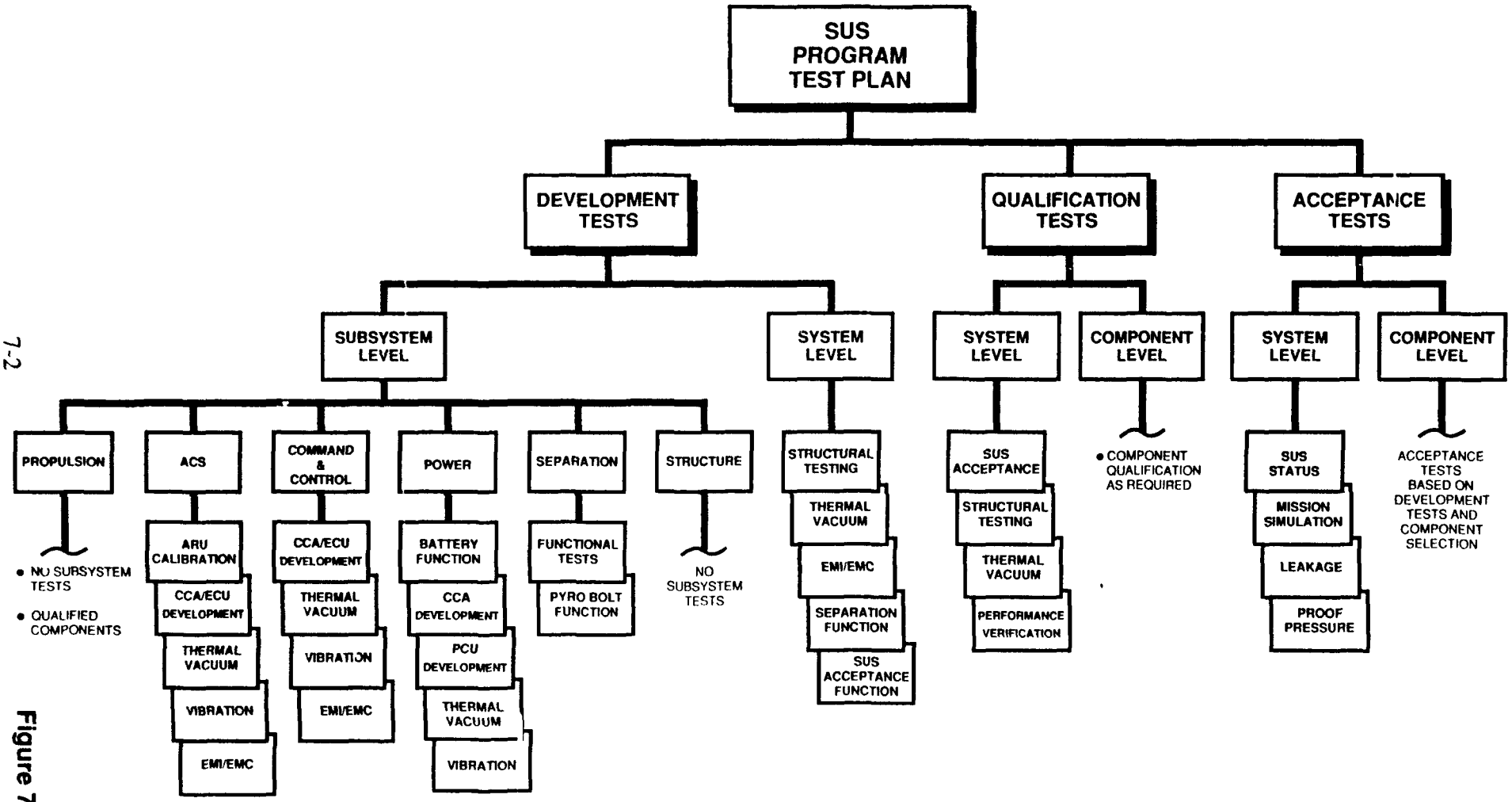

Figure 7-1

Attitude Control Subsystem (ACS) Development

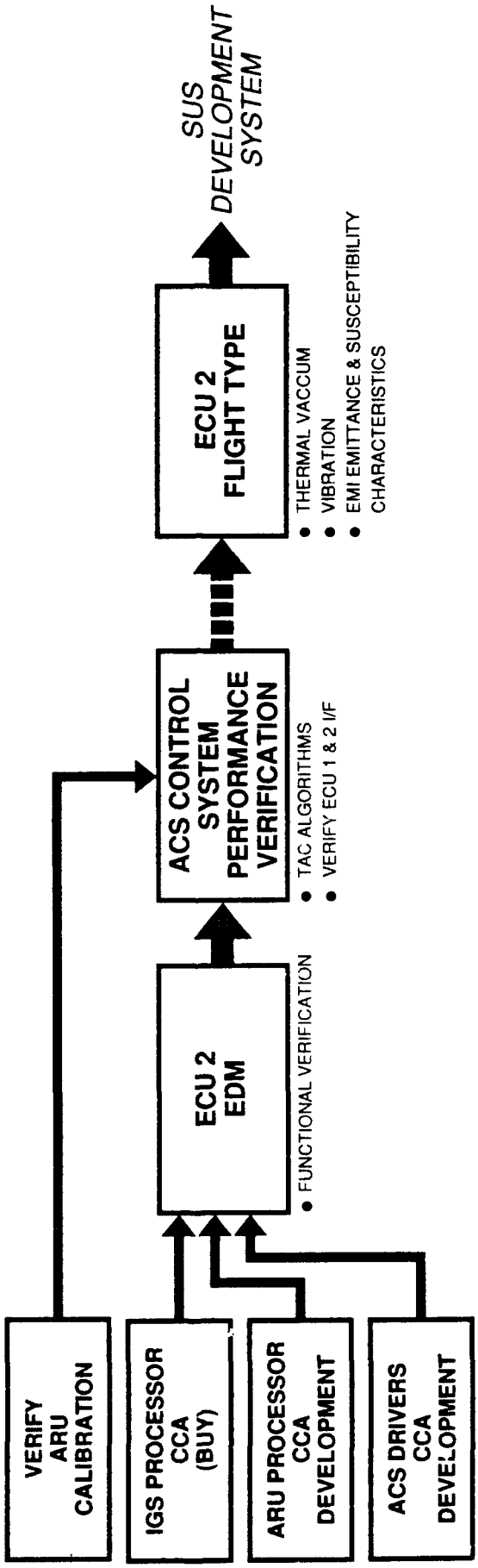

C11230-80

Figure 7-2

Command and Control Subsystem Development

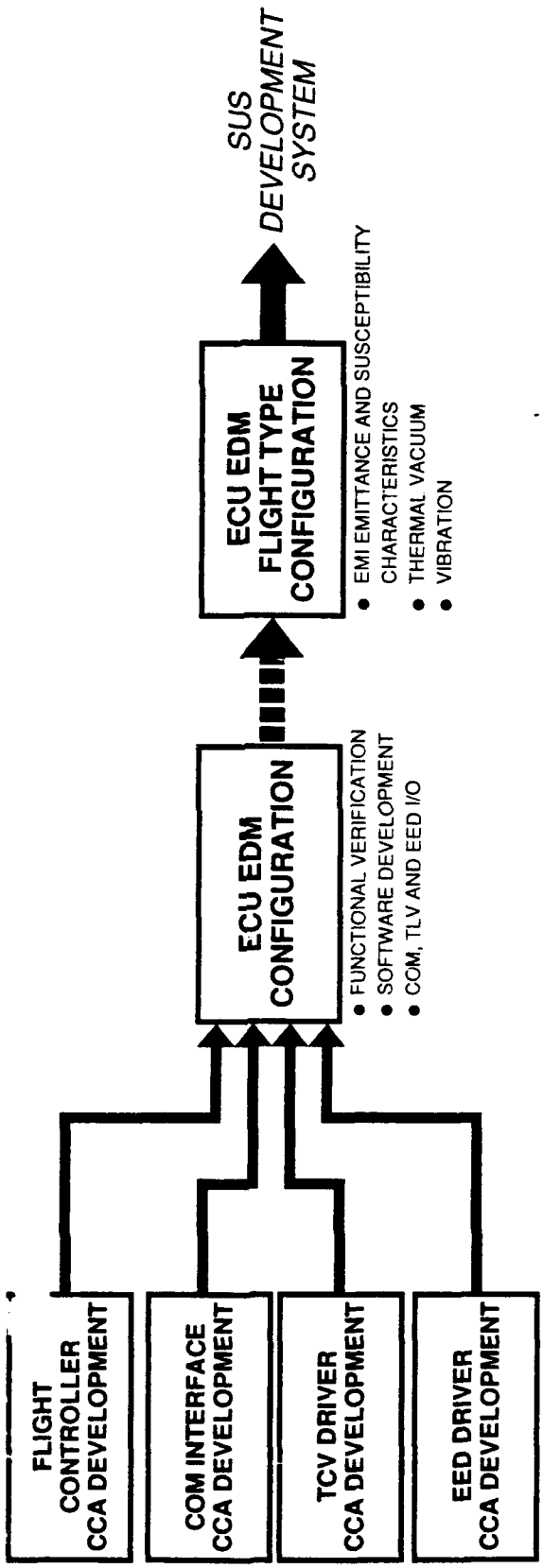

Figure 7-3

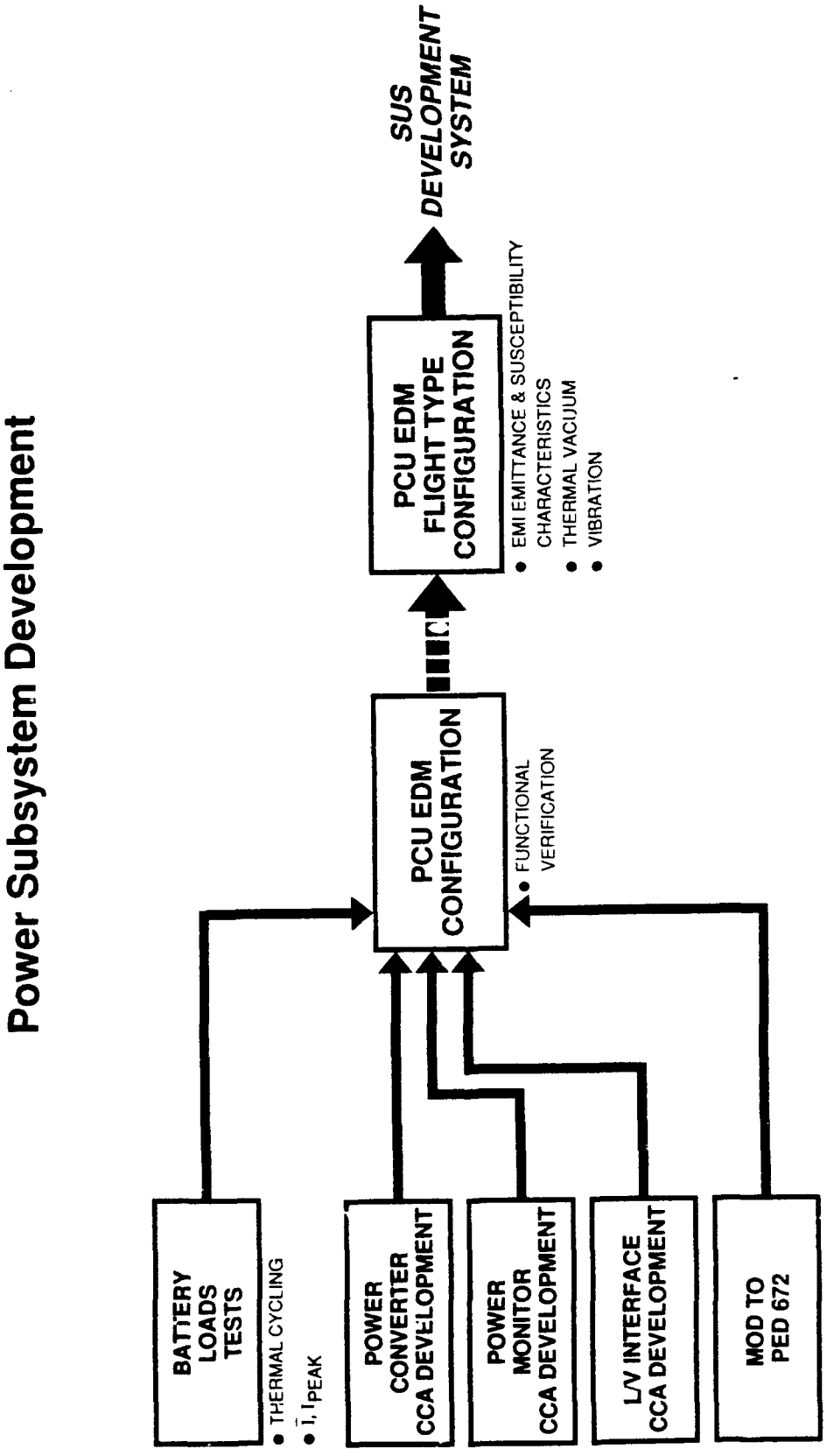
Power Subsystem Development
BATTERY LOADS TESTS
• THERMAL CYCLING
• $\bar{I}$, I_{PEAK}
POWER CONVERTER CCA DEVELOPMENT
POWER MONITOR CCA DEVELOPMENT
L/V INTERFACE CCA DEVELOPMENT
MOD TO PED 672
PCU EDM CONFIGURATION
• FUNCTIONAL VERIFICATION
PCU EDM FLIGHT TYPE CONFIGURATION
• EMI EMITTANCE & SUSCEPTIBILITY CHARACTERISTICS
• THERMAL VACUUM
• VIBRATION
SUS DEVELOPMENT SYSTEM

Figure 7-4

Separation Subsystem Tests

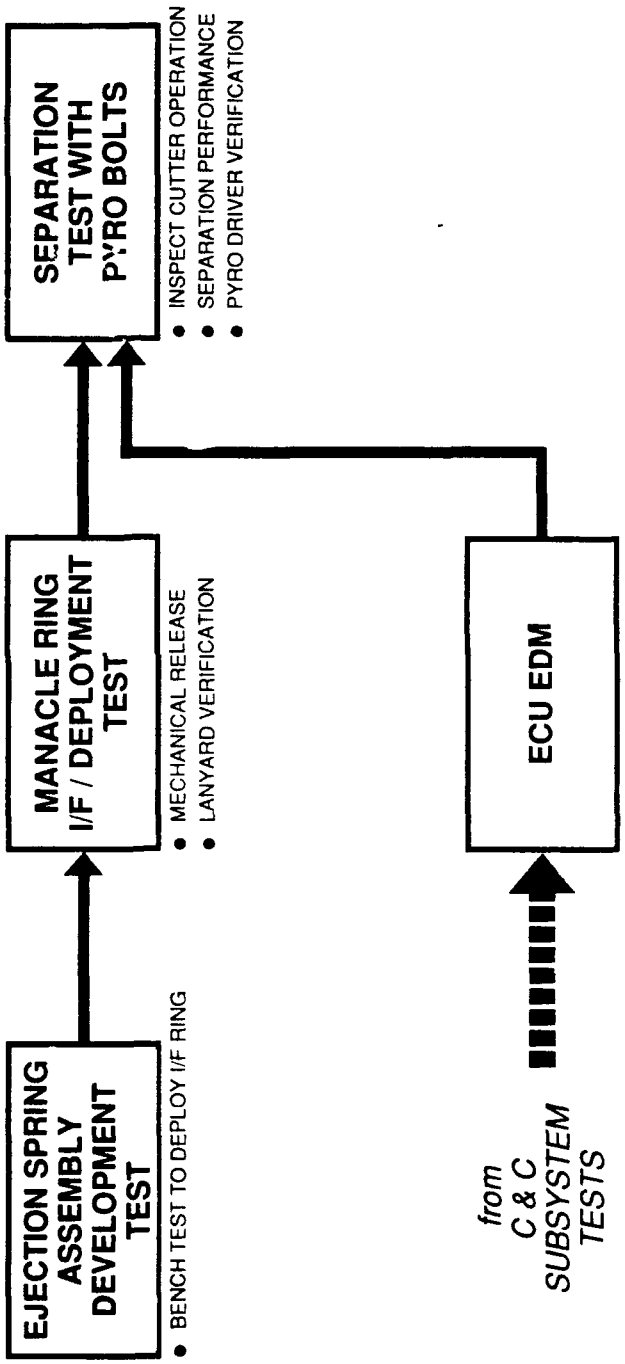

Development System Test Flow Plan

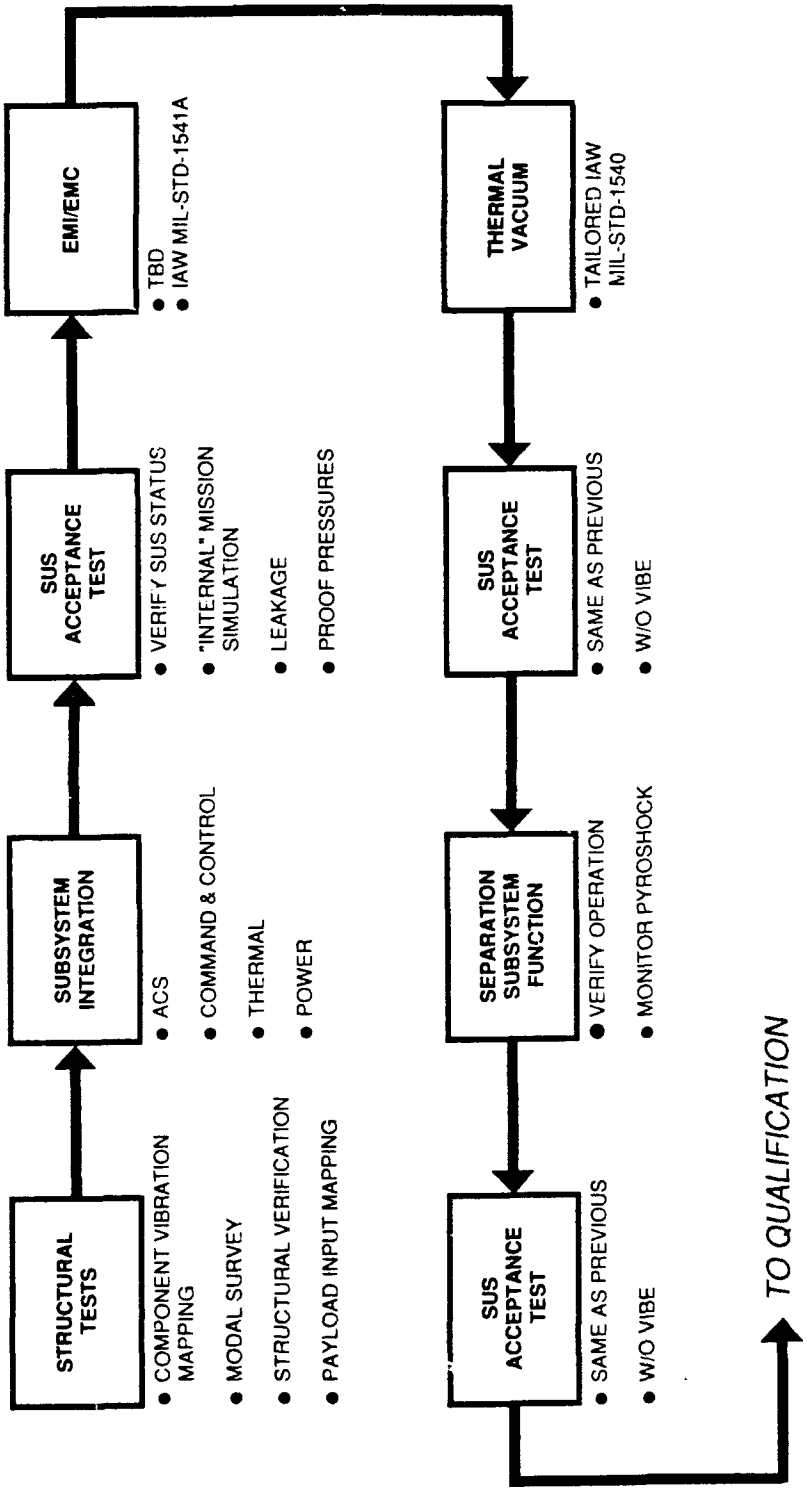

Figure 7-6

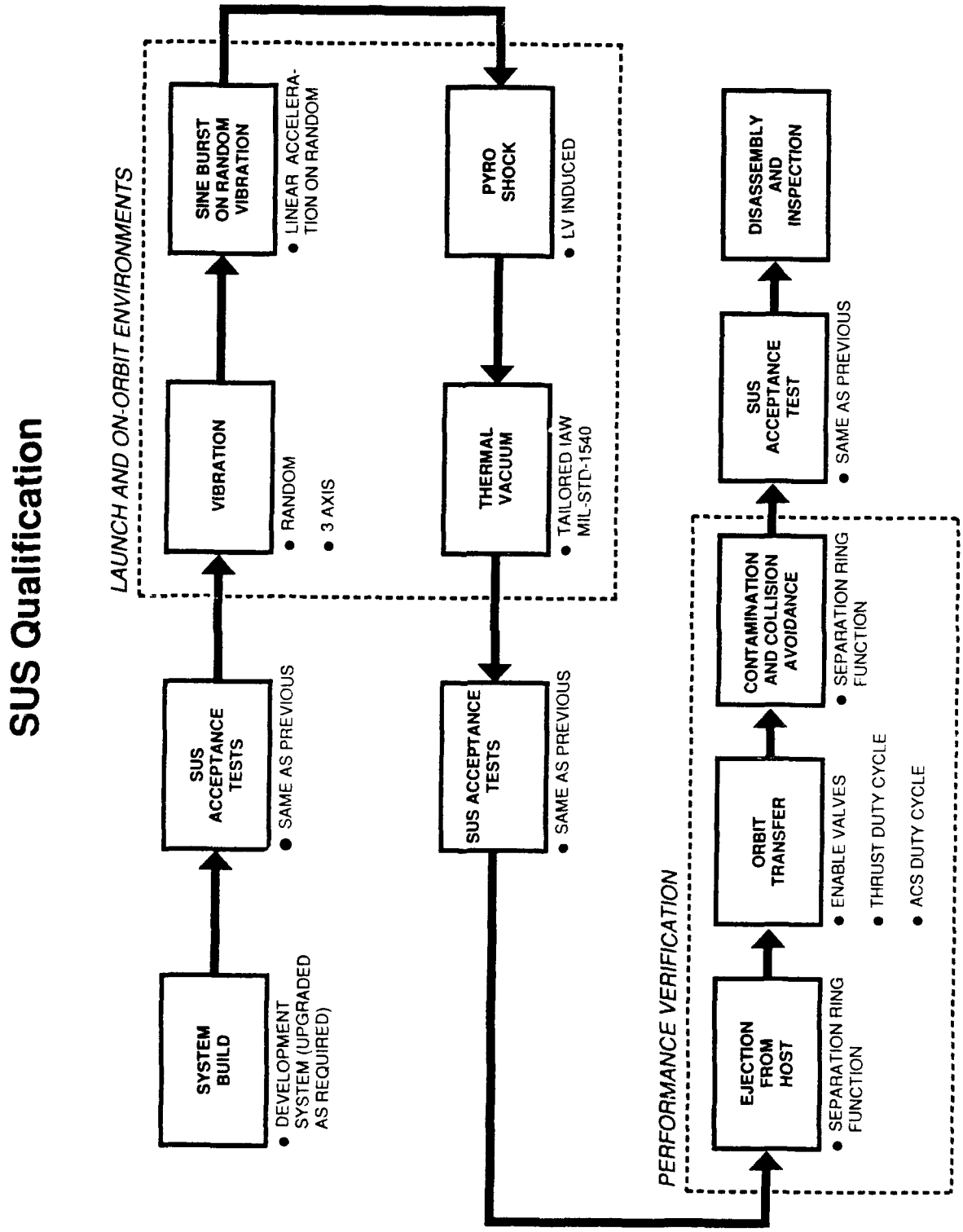
SUS Qualification
LAUNCH AND ON-ORBIT ENVIRONMENTS
SYSTEM BUILD
• DEVELOPMENT SYSTEM (UPGRADED AS REQUIRED)
SUS ACCEPTANCE TESTS
• SAME AS PREVIOUS
VIBRATION
• RANDOM
• 3 AXIS
SINE BURST ON RANDOM VIBRATION
• LINEAR ACCELERATION ON RANDOM
SUS ACCEPTANCE TESTS
• SAME AS PREVIOUS
THERMAL VACUUM
• TAILORED IAW MIL-STD-1540
PYRO SHOCK
• LV INDUCED
PERFORMANCE VERIFICATION
EJECTION FROM HOST
• SEPARATION RING FUNCTION
ORBIT TRANSFER
• ENABLE VALVES
• THRUST DUTY CYCLE
• ACS DUTY CYCLE
CONTAMINATION AND COLLISION AVOIDANCE
• SEPARATION RING FUNCTION
SUS ACCEPTANCE TEST
• SAME AS PREVIOUS
DISASSEMBLY AND INSPECTION

Figure 7-7

8.0 MISSION OVERVIEW/SYSTEM ENHANCEMENTS

MISSION OVERVIEW

Since SUS is a liquid propulsion stage, it possesses the capability to perform variable duration multiple firings of the ΔV thruster. Therefore, various mission profiles can be executed by modification of the guidance executive software module. This flexibility, along with the ability to onload up to 170 lbm of hydrazine propellant, affords a very tailorable SUS design which is able to serve a variety of missions.

Figure 8-1 illustrates SUS payload capability for three LEO orbit transfer maneuvers which includes a Hohmann transfer, circularization from and elliptical orbit and an orbit inclination change.

A generic Hohmann transfer is illustrated in Figures 8-2 and 8-3. In this example, SUS provides orbit transfer capability for a small satellite from and initial orbit of 100 nm to a final orbit of 500 nm. The SUS/satellite combination is placed into the initial orbit as a secondary payload aboard a medium sized launch vehicle. A detailed mission event timeline is presented in Figure 8-3 which illustrates SUS functions for this mission from initial SUS power up through payload separation and anticollision burn.

The SUS vehicle is autonomous from the standpoint of power and control commands required from the launch vehicle. The launch vehicle is responsible for sending a power up command to SUS and providing a time synchronization signal to coordinate SUS activities. From this point on, all command event sequencing is performed based on a time delta from the initial synchronization signal. Figure 8-4 illustrates the command discrete interfaces required for a typical mission.

SUS EHANCEMENTS

The SUS design represents a very capable, low cost, propulsion stage which can be integrated into a variety of launch vehicles and which satisfies the orbit enabling requirements of the small satellite community. This system has the potential to be enhanced to a LEO Smallsat bus through the use of a payload support module. This module would attach directly to the basic SUS and provide the required payload support function such as secondary power, attitude determination and control, and telemetry.

SUS MISSION CAPABILITIES

HOHMAN TRANSFER

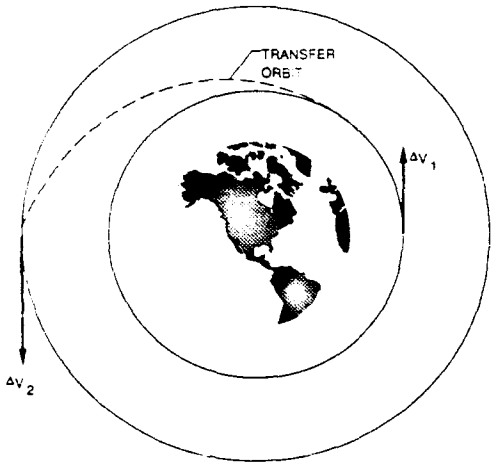

INITIAL ALTITUDE = 100 nm

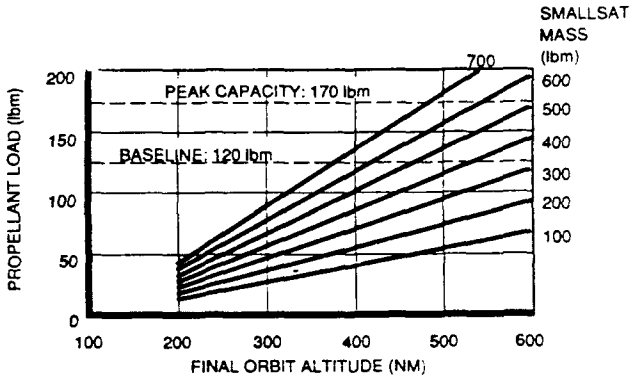

CIRCULARIZATION PERFORMANCE

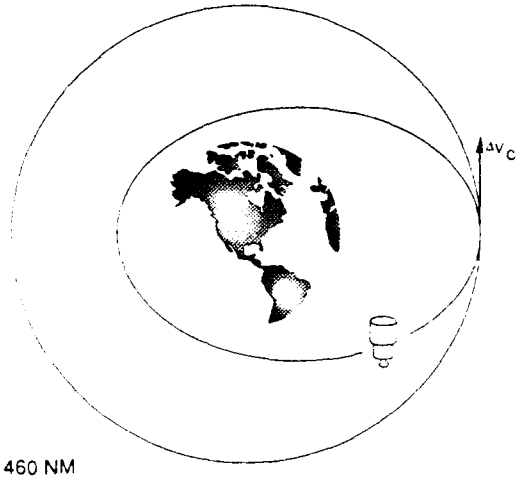

100 NM x 460 NM

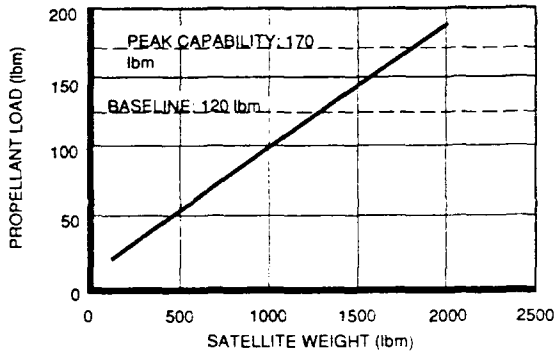

PLANE CHANGE PERFORMANCE

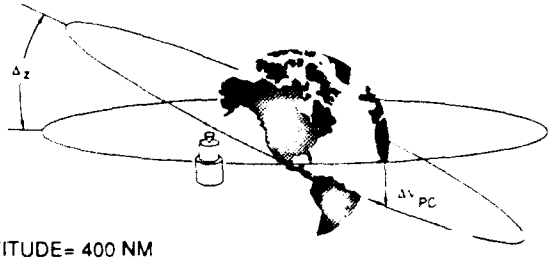

ALTITUDE= 400 NM

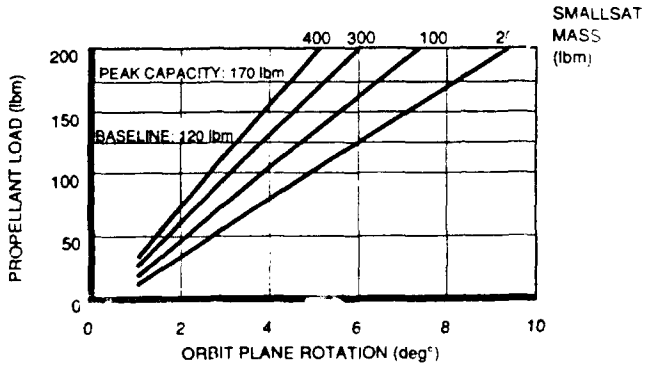

C11230-99

Figure 8-1

SUS HOHMANN TRANSFER OPERATION SEQUENCE

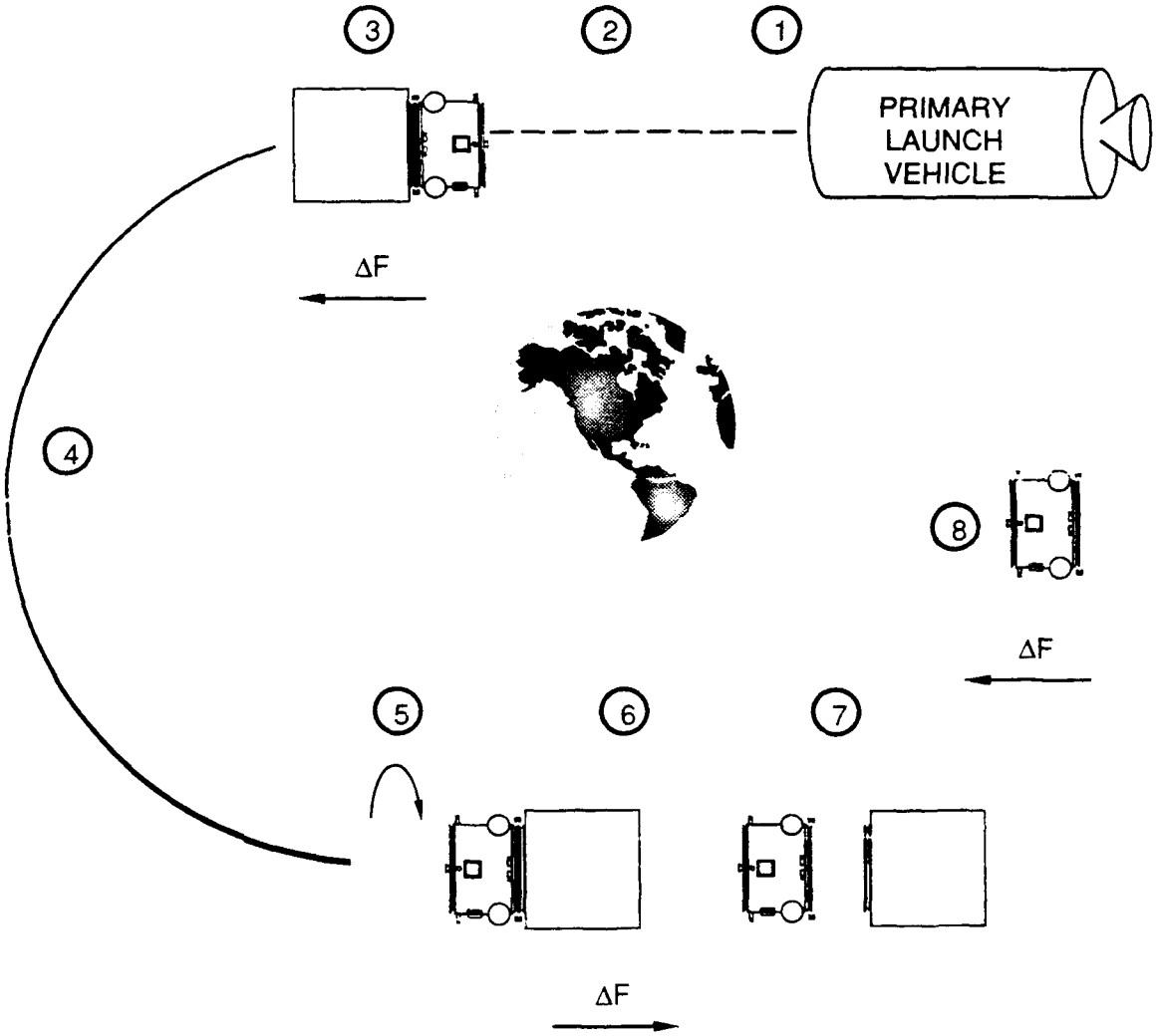

EVENT

1. EJECT FROM HOST VEHICLE
2. THREE AXIS CONTROL
3. INSERTION THRUSTER FIRING
4. COAST TO APOGEE,THREE AXIS CONTROL
5. REORIENTATION (180°)
6. CIRCULARIZATION (OR PERIGEE INCREASE) THRUSTER FIRING
7. PAYLOAD DEPLOYMENT (OPTIONAL SPIN-UP)
8. THRUST VEHICLE TO LOWER ORBIT (C/CAM)

C11209-45D

Figure 8-2

SUS Mission Event Sequence

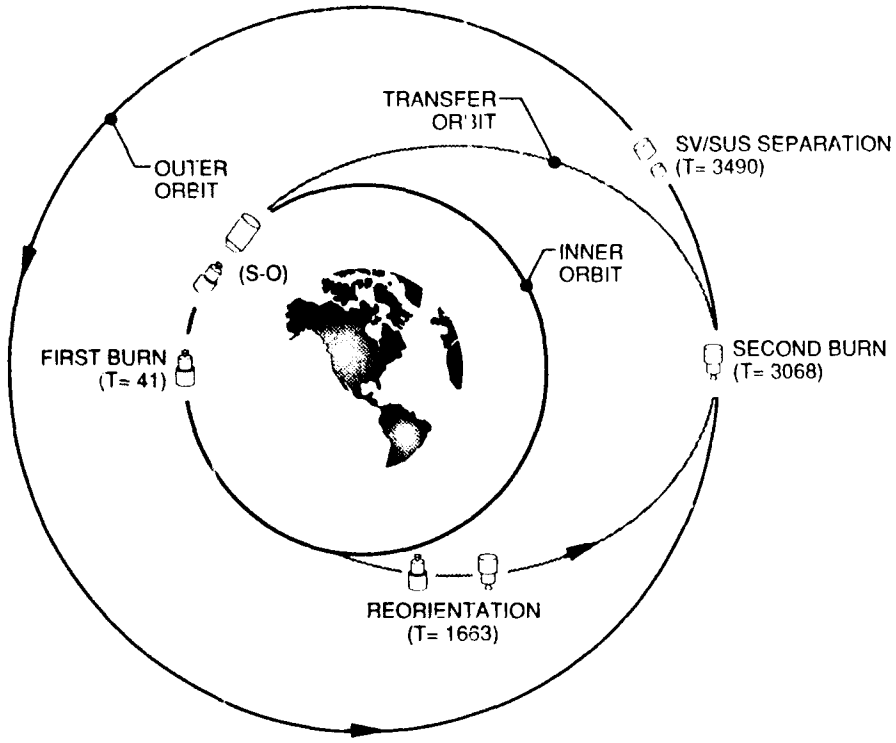

TIME (sec)	EVENT DURATION (sec)	EVENT	
S-20		● ECU POWER UP	(L/V DISCRETE #1)
		● SUS BIT	
S-15		● SUS CLOCK SYCHRONIZATION	L/V DISCRETE #6)
S-13		● GN2 N2H4 PYRO VALVE INITIATION	(L/V DISCRETE #7, 8)
S-3		● GO INERTIAL	
		● L/V SEPARATION VOTE	(L/V DISCRETE #2, 3, 4, 5)
S-0		● BEGIN SEPARATION EVENT	
1		● END SEPARATION EVENT	
	5	COAST	
6	15	● REORIENTATION I (90)	
21	15	● N2H4 SETTLING BURN	
36	5	● ATTITUDE TRIM	
41		● BEGIN FIRST DELTA V BURN	
313		● END FIRST DELTA V BURN	
	1350	COAST PHASE	
1663	30	● REORIENTATION II (180)	
	1350	COAST PHASE	
3043	5	● ATTITUDE TRIM	
3048	15	● N2H4 SETTLING BURN	
3063	5	● ATTITUDE TRIM	
3068		● BEGIN SECOND DELTA V BURN	
3310		● END SECOND DELTA V BURN	
3340	30	● REORIENTATION III (180)	
3370	120	● S/V SPIN-UP (OPTIONAL)	
3490		● BEGIN SEPARATION EVENT	
3491		● END SEPARATION EVENT	
	200	COAST	
3691	30	● REORIENTATION IV (180)	
3721	15	● N2H4 SETTLING BURN	
3736	5	● ATTITUDE TRIM	
3741		● BEGIN ANTICOLLISION DELTA V BURN	
3751		● END ANTICOLLISION DELTA V BURN	

Figure 8-3

L/V Command and Verification Interface

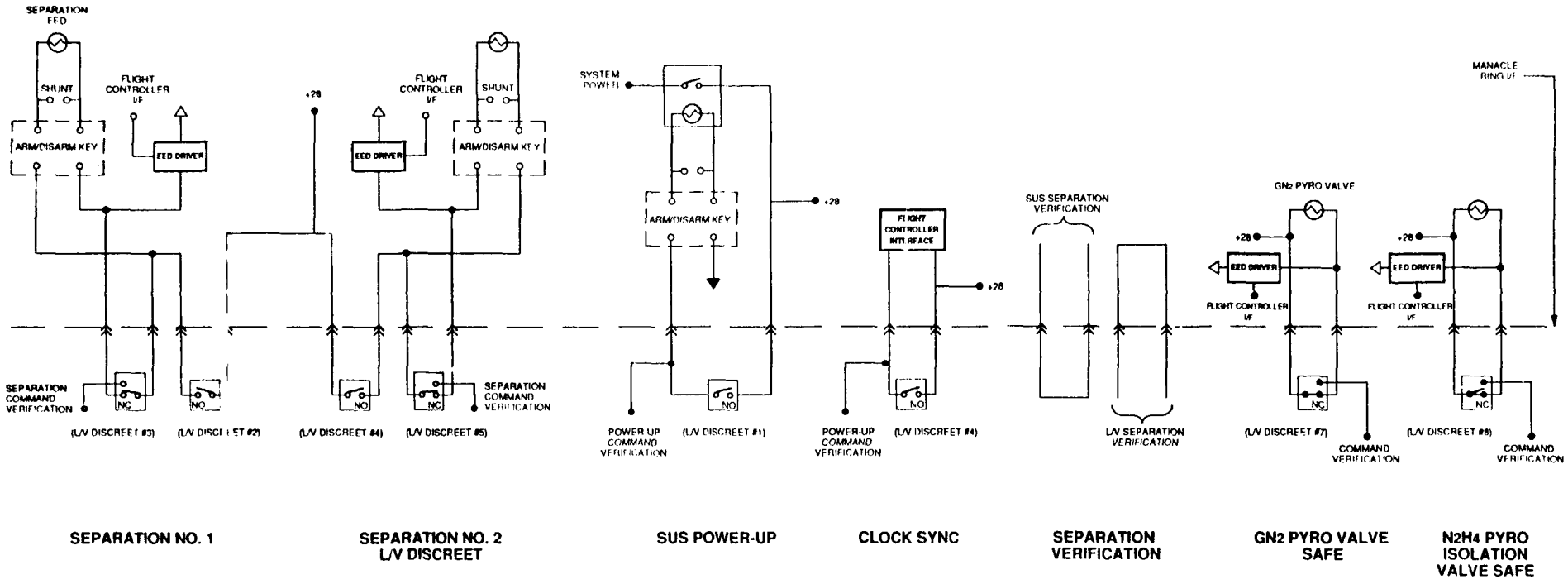

SEPARATION NO. 1 | SEPARATION NO. 2 L/V DISCREET | SUS POWER-UP | CLOCK SYNC | SEPARATION VERIFICATION | GN2 PYRO VALVE SAFE | N2H4 PYRO ISOLATION VALVE SAFE

- EIGHT L/V COMMAND DISCREET (CONTACT CLOSURES, NO L/V POWER REQUIRED)
- SEVEN VERIFICATION SIGNALS

Figure 8-4

APPENDIX A

COMPONENT SPECIFICATION
RRC CS-0252

PRIME ITEM DEVELOPMENT SPECIFICATION
FOR SMALL UPPER STAGE

INTERFACE CONTROL DRAWING – SUS

DOCUMENT REVISION RECORD
DOCUMENT NO. RRC-CS-0252

REVISION AND DATE	DESCRIPTION OF CHANGE / REVISION AND PAGES AFFECTED	EFFECTIVITY
ORIGINAL 3/13/91		

XXX #____

																						REV
96		97		98		99		100														SH
																						REV
84		85		86		87		88		89		90		21		92		93		94		95	SH
																						REV
72		73		74		75		76		77		78		79		80		81		82		83	SH
																						REV
60		61		62		63		64		65		66		67		68		69		70		71	SH
																						REV
48		49		50		51		52		53		54		55		56		57		58		59	SH
																						REV
36		37		38		39		40		41		42		43		44		45		46		47	SH
–		–		X																		REV
24		25		26		27		28		29		30		31		32		33		34		35	SH
–		–		–		–		–		–		–		–		–		–		–		–	REV
12		13		14		15		16		17		18		19		20		21		22		23	SH
–	–	–	–	–	–	–	–	–	–	–	–	–	–	–	–	–	–	–	–	–	REV	REV STATUS OF PAGES
1		2		3		4		5		6		7		8		9		10		11	SH	

APPROVAL	
ORIGINATOR	**Olin ROCKET RESEARCH COMPANY** DEFENSE SYSTEMS GROUP
QUALITY ASSURANCE	TITLE
RELIABILITY ENGINEER	**PRIME ITEM DEVELOPMENT SPECIFICATION FOR SMALL UPPER STAGE**
COMPONENT ENGINEER	
PROGRAM / PROJECT ENGINEER	DOCUMENT NO. **RRC-CS-0252** — REVISION B TEF 6/26/91
	RELEASE DATE — DOCUMENT CONSISTS OF 25 PAGES

0378 REV A (1/91) – CS

TABLE OF CONTENTS

SECTION		PAGE
1.0	SCOPE	1
2.0	APPLICABLE DOCUMENTS	1
2.1	Government Documents	1
2.1.1	Specifications	1
2.1.2	Standards	2
2.2	Non-Government Documents	2
3.0	REQUIREMENTS	2
3.1	Prime Item Definition	2
3.1.1	Functional Definition	3
3.2	Characteristics	3
3.2.1	Performance	3
3.2.2	Physical Characteristics	5
3.2.3	Reliability	6
3.2.4	Maintainability	6
3.2.5	Environmental Conditions	6
3.2.6	Transportation	13
3.3	Design and Construction	13
3.3.1	Materials, Processes and Parts	13
3.3.2	Electromagnetic Radiation	14
3.3.3	Nameplates or Product Marking	14
3.3.4	Workmanship	15
3.3.5	Safety	16
3.3.6	Human Performance / Human Engineering	16
3.3.7	Electrical Bonding	16
3.4	Documentation	16
4.0	QUALITY ASSURANCE PROVISIONS	17
4.1	General	17
4.1.1	Responsibility for Tests	17
4.1.2	Compliance Documents	17
4.2	Quality Conformance Inspections	17
4.2.1	Development Tests	20
4.2.2	Qualification Tests	20

TABLE OF CONTENTS
(Continued)

SECTION		PAGE
	4.2.3 Acceptance Tests	20
	4.2.4 Pre-Launch Validation Tests	20
	4.2.5 Components	20
	4.2.6 Test Equipment. Accuracies and Tolerances	20
5.0	PREPARATION FOR DELIVERY	24
	5.1 Preservation, Packaging and Packing	24
	5.2 Marking for Shipment	24
6.0	NOTES	24
	6.1 Definition	24
	6.1.1 Flight Ready State	24
	6.1.2 Low Level Servicing	25

LIST OF FIGURES

FIGURE		PAGE
3-1	Random Vibration Environment	8
3-2	Acoustic Environment	10
3-3	Shock Environment	11
3-4	Ascent Pressure Profile	12
4-1	Development System Test Flow Plan	21
4-2	SUS Qualification	22

LIST OF TABLES

TABLE		PAGE
4-1	Verification Matrix	18

1.0 SCOPE

This specification establishes the performance, design, development and test requirements for the small upper stage (SUS) orbit transfer system.

2.0 APPLICABLE DOCUMENTS

2.1 GOVERNMENT DOCUMENTS

The following documents of the exact issue shown form a part of this specification to the extent specified herein. In the event of conflict between the documents referenced herein and the contents of this specification, the contents of this specification shall be considered a superseding requirement.

2.1.1 Specifications

Federal

QQ-C-320	Chromium Plating (electrodeposited)
QQ-N-290	Nickel Plating (electrodeposited)

Military

MIL-B-5087B	Bonding, Electrical, and Lightning Protection for Aerospace Systems
MIL-M-3171	Magnesium Alloy, Processes for Pretreatment and Prevention of Corrosion on
MIL-C-5541	Chemical Conversion Coatings on Aluminum and Aluminum Alloys
MIL-F-7179	Finishes and Coatings, General Specification for Protection of Aerospace Weapons Systems, Structures and Parts
MIL-A-8625	Anodic Coatings, for Aluminum and Aluminum Alloys and Missile Systems

Other Government Agencies

DOD-HDBK-343	Design, Construction and Testing Requirements for One of a Kind Space Equipment

WSMCR 127-1	Range Safety Regulation
SDR-550-25	Stress and Fracture Mechanics Analysis of Pressurized Structures
MIL-HDBK-340	Application Guidelines for MIL-STD-1540B; Test Requirements for Space Vehicles

2.1.2 Standards

Military

MIL-STD-129	Marking for Shipment and Storage
MIL-STD-1472	Human Engineering Design Criteria for Military Systems, Equipment and Facilities
MIL-STD-1540	Test Requirements for Space Vehicles
MIL-STD-1541A	Electromagnetic Compatibility Requirements for Space Systems
MIL-STD-1547	Parts, Materials and Processes Requirements for Space and Launch Vehicles, Technical
MIL-STD-1574	System Safety Program for Space and Missile Systems

2.2 NON-GOVERNMENT DOCUMENTS

The following document(s) form a part of this specification to the extent specified herein

ASTM E595	Standard test method for total mass loss and collected volatile condensable materials from outgassing in a vacuum environment.

3.0 REQUIREMENTS

3.1 PRIME ITEM DEFINITION

The SUS is a self-contained transfer stage to be carried on and ejected from an expendable launch vehicle (ELV). The SUS shall be capable of placing small satellites (referred to within as "satellite"), 400 lbs or less, in a variety of low earth orbits from a designated host vehicle.

The SUS is comprised of seven subsystems as follows:

Propulsion:	Hydrazine propulsion system.
Attitude Control:	Three axis control (TAC) – Cold gas ACS thrusters and an inertial guidance system.
Command and Control:	Electronic Control Unit (ECU) provides mission event timing and housekeeping functions.
Power:	Power is provided from a battery(s). Power conditioning, sequencing and converting is done by the Power Conditioning Unit (PCU).
Thermal Management:	No active thermal management. Thermal control is accomplished with appropriate coatings and coverings.
Structure/Separation:	The structure is a ring stiffened cylinder with an internally mounted propellant tank. Separation from the ELV and satellite is done by a Marmom clamp at apposing and ends of the ring stiffened cylinder.

3.1.1 Functional Definition

The SUS functional and physical interfaces shall be as follows:

3.1.1.1 Functional Interfaces

The SUS has functional interfaces with the ELV and the satellite. The functional interface with the ELV will provide signal(s) allowing SUS function to begin. The functional interface with the satellite provides indication that the SUS has separated from the small satellite. Both interfaces are shown on RRC Drawing No. 31476.

3.1.1.2 Physical Interfaces

The SUS has physical interfaces with the ELV and small satellite as shown on RRC Drawing No. 31476.

The thermal interface between the SUS and payload is considered adiabatic (conductive and radiative) for analysis maximum and minimum flux conditions. This is not a design requirement.

3.2 CHARACTERISTICS

3.2.1 Performance

The SUS shall be designed to perform as specified herein.

3.2.1.1 Functional Characteristics

3.2.1.1.1 Ejection From Host Vehicle

Velocity – The SUS shall provide ejection from the host vehicle with a minimum separation velocity relative to the host vehicle, along with axial direction of the SUS of 1.0 ft/sec for a payload mass of up to 400 lbm across the operational temperature extremes.

3.2.1.1.2 Orbit Transfer

The transfer maneuver capability of SUS shall include, but not be limited to, transfer orbit insertion and circularization and orbit plan change. The SUS shall possess the capability of providing 27,000 lbf-sec total impulse, which typically is capable of transferring a payload mass of 400 pound (mass) from a 100 nm circular parking orbit to a 500 nm circular orbit, or rotating the orbit plane by 3 degrees.

3.2.1.1.3 Orbit Insertion Accuracy

The SUS shall be capable of providing target orbit, three-sigma dispersion values of:

- Apogee Altitude: ± 20 nmi
- Perigee Altitude: ± 20 nmi
- Inclination: ± .35 degree
- Argument of Perigee: TBD degree

for a typical low altitude orbit transfer mission relative to the host vehicle orbit. The host vehicle pointing accuracy at separation (tipoff not included) will be less than ± 2.0 degrees for attitude and ± 1.0 degree/sec for attitude rates in any axis.

3.2.1.1.4 Contamination and Collision Avoidance

The SUS shall be capable of providing a minimum separation velocity of 1.0 ft/sec from the satellite once the target orbit has been achieved for satellite mass up to 400 lbm across the operational temperature extremes.

The SUS shall provide a minimum separation distance of 200 feet from the payload prior to performing any collision avoidance maneuvers.

The SUS shall be capable of performing a collision avoidance maneuver providing a minimum separation distance of 500 feet after 2 orbits between the SUS and the satellite.

The attitude control and the delta V thrust system will not operate for 2.0 minutes prior to payload separation from SUS.

3.2.1.2 Life

3.2.1.2.1 Storage Life

The SUS shall be capable of storage for a minimum of 2 years with low level servicing (6.1.2) but without need for maintenance, adjustment or replacement of parts.

3.2.1.2.2 Operating Life – Pre-Flight

The SUS shall be capable of remaining in a flight ready state (6.1.1) while installed on the launch vehicle for as long as 6 months without need for special attention or maintenance.

3.2.1.2.3 Operating Life – On Orbit

1)	In Orbit While Attached to Host	1.5 Hours
2)	Transfer Mission While Attached to the Small Satellite	1 Hour

3.2.2 Physical Characteristics

3.2.2.1 Weight

The SUS weight is critical and shall be a minimum consistent with good design practices and low cost goals. The SUS wet (inerts and propellant) weight combined shall not exceed TBD lbs. (NOTE: Current estimate is 400 lbs maximum.)

3.2.2.2 Dimensions

The SUS envelope dimensions shall not exceed the envelope shown on RRC Drawing No. 31476.

3.2.2.3 Fundamental Frequency

The first lateral bending mode and first axial mode of the structure shall be above 15 Hz and 35 Hz, respectively, to assure validity of the load factors.

3.2.2.4 Handling and Transport

Shipping containers, packaging and other safeguards shall be provided to protect the SUS from environments incident to transport and handling as specified in 3.2.5.1.

3.2.2.5 Storage

Storage environments shall be considered in the design of the SUS. During storage, the SUS shall be required to withstand environments as specified in 3.2.5.1. Environmental protection shall be provided for the SUS as necessary during the storage life specified herein.

3.2.2.6 Durability

The SUS should be so designed and constructed that no fixed part or assembly shall become loose, no movable parts or assembly shall become undesirably free or sluggish and no degradation shall be caused in the performance beyond that specified for the SUS during operation or storage.

3.2.3 Reliability

Reliability analyses, failure mode effects and criticality analyses shall be to the subsystem level. The design of the SUS shall be such that a failure shall not propagate to the ELV.

The SUS shall be designed to have a probability of successful operation of .95 minimum.

3.2.4 Maintainability

The SUS should be designed so as to not require any scheduled maintenance, repair or servicing during their service life. The design should incorporate test and diagnostic discretes to allow verification of functional performance. The design should accommodate simple removal and replacement of major components during factory assembly and of explosive ordnance devices, batteries and other site replaceable items at the launch site when mated to the launch vehicle. Access should be provided to those test plugs, harness break-in points, external umbilical connections, safe and arm devices, explosive ordnance devices, pressurant and propellant fill and drain valves, and other devices as might be required for prelaunch maintenance, alignment and servicing. Alignment references for critically aligned components shall be visible directly or through windows or access doors.

3.2.5 Environmental Conditions

The SUS shall be capable of withstanding exposure to any natural sequence of non-operating environments and shall perform as specified following exposure to the operating environments.

The random vibration, acoustic, pyroshock and acceleration environments are dependent upon structural coupling between the SUS / satellite and ELV. The environments specified below are based upon a conservative design envelope provided by the ELV contractors.

3.2.5.1 Non-Operating – Transportation and Storage

The vibration, acoustic and shock environment during transportation and storage shall not exceed the launch environments.

3.2.5.1.1 Humidity

The relative humidity may vary from 0 to 80 percent. Additionally, the SUS should be capable of performance as specified following sea fog with relative humidity of 100 percent for a duration of 12 hours.

3.2.5.1.2 Ambient Air Temperature

The ambient air temperature may vary between 34 to 140°F.

3.2.5.1.3 Ambient Pressure

The ambient pressure will vary between 31.3 in Hg (sea level) and 3.5 in Hg (50,000 feet).

3.2.5.2 Launch Environments

In the launch ready configuration, the SUS design shall be capable of the environments specified herein.

3.2.5.2.1 Thermal Environment

The expected ambient air temperature in the payload fairing (PLF) will be controlled to within 40 - 100°F until liftoff.

The peak heat flux radiated from the inside surface of the PLF (insulated) will be 330 Btu/hr-ft^2 and TBD for an uninsulated PLF. The heat flux will be radiated a maximum of 3 minutes (typical mission duration).

The maximum estimated free molecular heat (FMH) flux upon PLF jettison is 360 Btu/hr-ft^2, decaying to a negligibly small quantity within 2 minutes. A detailed FMH analysis is performed for each particular launch to verify proper PLF jetison time.

3.2.5.2.2 Random Vibration

The flight random vibration levels are shown in Figure 3-1. The SUS shall be capable of the flight random vibration levels in any axis. The levels shown are for inputs at the PLF interface plane. If the SUS is not located at the PLF interface, this should be accounted for.

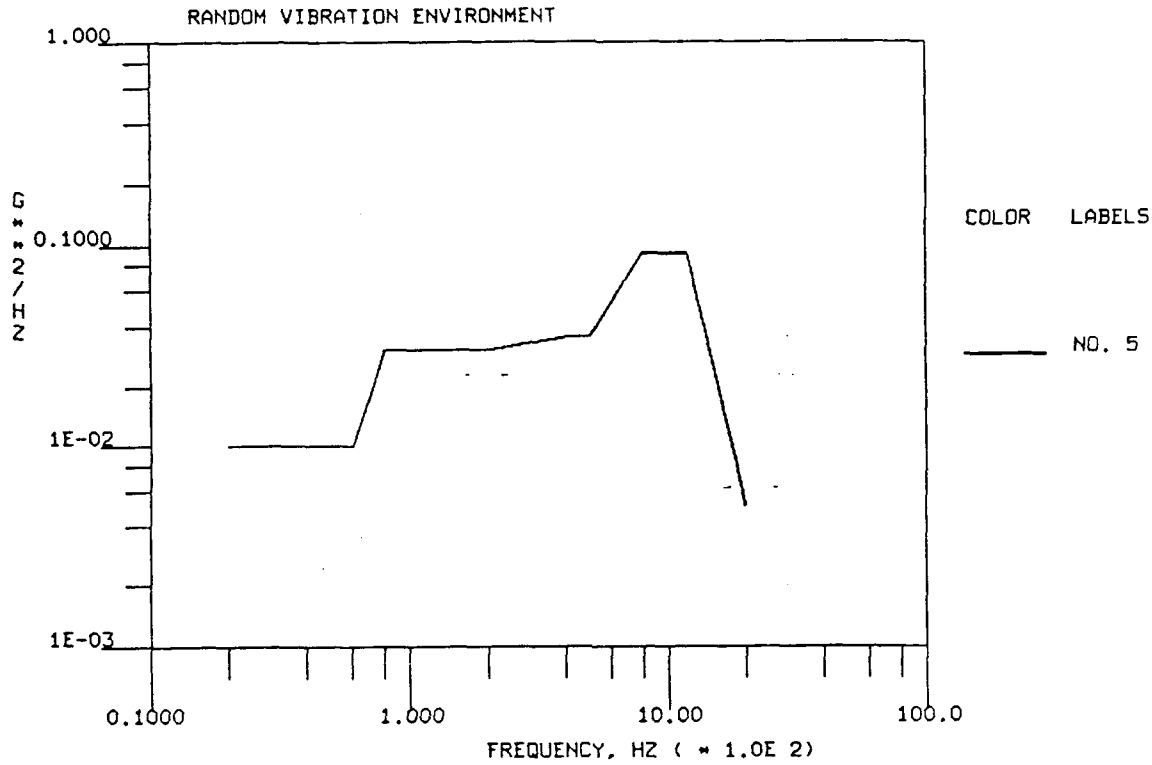

GRAPH: X-AXIS LOG SCALE, Y-AXIS LOG SCALE

FREQUENCY (HZ)	ACCELERATION LEVEL (G^2/HZ)
20	0.01
60	0.01
80	0.03
200	0.03
400	0.035
500	0.035
800	0.090
1200	0.090
2000	0.005

Figure 3-1

3.2.5.2.3 Acoustics

The system will encounter acoustic excitation from rocket engine noise and pressure fluctuations over the surface of the equipment as shown in Figure 3-2.

3.2.5.2.4 Pyroshock

The flight levels shown in Figure 3-3 shall be used to represent shock transmitted into the SUS as a result of launch vehicle operations.

3.2.5.2.5 Acceleration

Acceleration levels in the low frequency range will be encountered due to the combined effects of quasi-steady state acceleration and transient response. A quasi-static factor of 13 g's in any axis shall be used for the design.

3.2.5.2.6 Combine Loads

The combined loads shall be equal to the sum of the quasi-static acceleration factor and three sigma random vibration levels of Section 3.2.5.2.2.

3.2.5.2.7 Pressure

The pressure will decrease from 14.7 psia (101 kpa) as shown in Figure 3-4.

3..2.5.3 Operating Environments – On Orbit

The SUS shall be designed to withstand, without degradation of specified performance and function, the operating environments specified herein for the entire orbital life of Section 3.2.1.2.3.

3.2.5.3.1 Thermal

Two separate extreme flux conditions will be considered:

Maximum –	Solar Flux	=	450 Btu/hr/ft^2
	Albedo	=	Based on 0.32 reflectance of earth
	Earth IR	=	80 Btu/hr/ft^2

SUS / payload attitude will be "worst case" in terms of maximum incident flux.

Minimum – Zero flux from sun and earth.

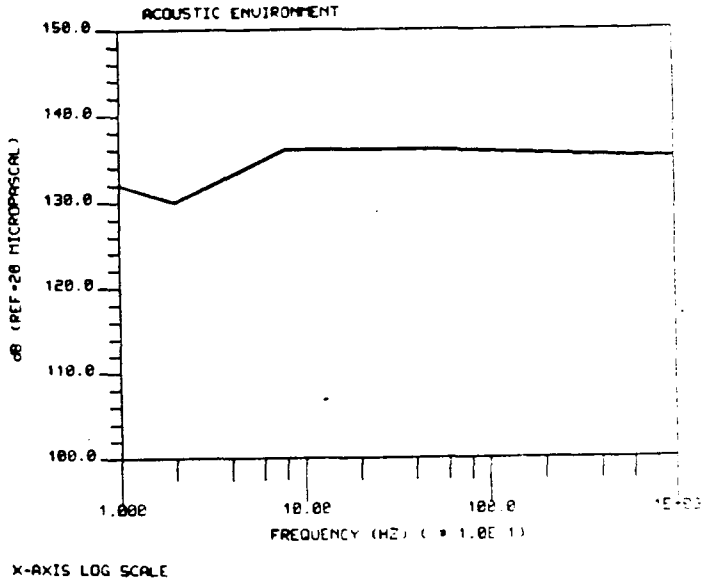

ACOUSTICS

1/3 OCTAVE BAND FREQUENCY (HZ)	SOUND PRESSURE LEVEL (DB, REF = 20 MICROPASCAL)
10	132
12.5	131.36
16	130.64
20	130
25	130.97
31.5	131.97
40	133
50	133.97
63	134.97
80	136
100	136
125	136
160	136
200	136
250	136
315	136
400	136
500	136
630	135.92
800	135.84
1000	135.77
1250	135.69
1600	135.61
2000	135.54
2500	135.46
3150	135.39
4000	135.31
5000	135.23
6300	135.15
8000	135.07
10000	135
Overall	149.88

Figure 3-2

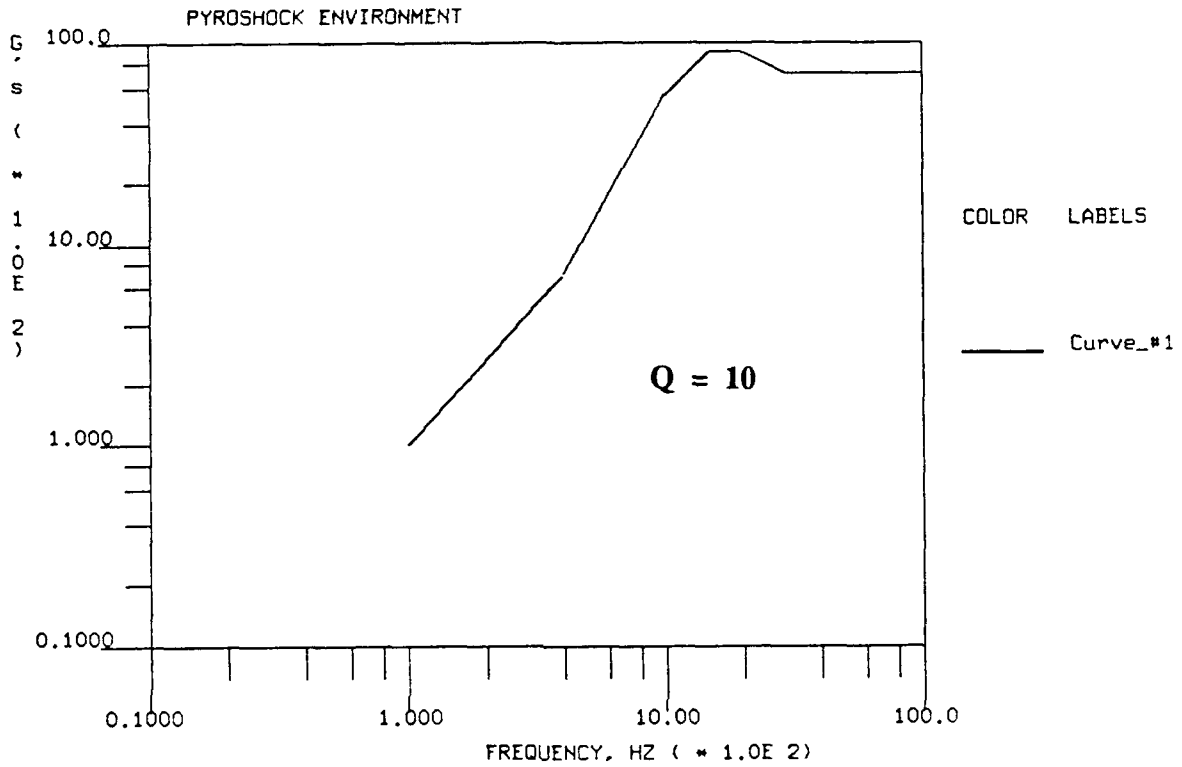

FREQUENCY (HZ)	ACCELERATION LEVEL (G^2/HZ)
100	100
400	700
1000	5500
1500	9000
2000	9000
3000	7000
10000	7000

Figure 3-3

Maximum Depressurization Rate Profile

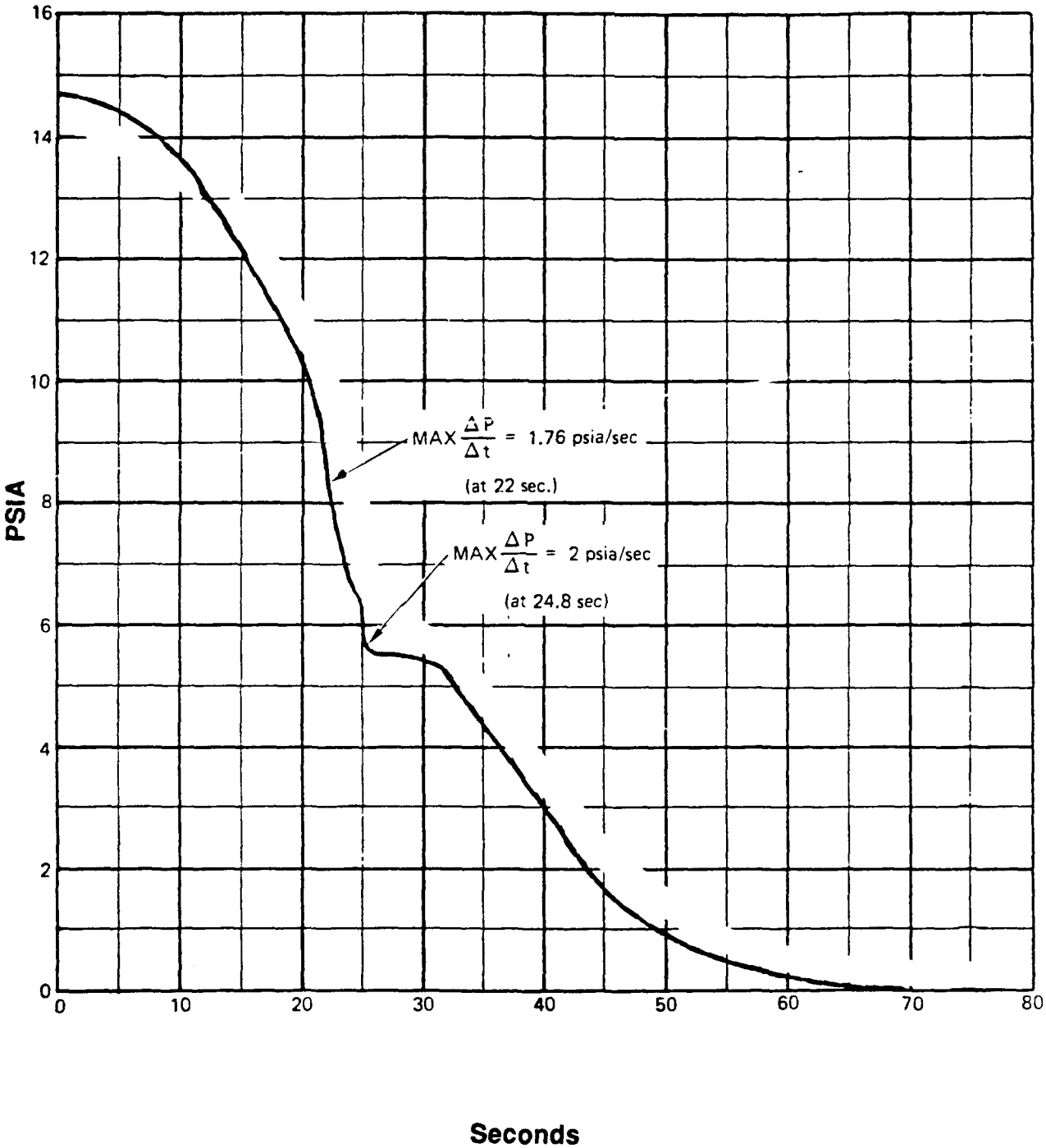

Figure 3-4

3.2.5.3.2 Pressure

The minimum ambient pressure will be that of deep space.

3.2.6 Transportation

The SUS shall be designed for ground and air transportation. Attach points for transportation and handling shall be provided. The mode of transportation, support and types of protective covers used shall be chosen to assure that transportation and handling do not impose vibration, acoustic or shock environments which exceed those imposed in operational modes.

3.3 DESIGN AND CONSTRUCTION

The SUS design and construction shall be in accordance with the requirements as set forth below and in accordance with DOD-HDBK-343.

3.3.1 Materials, Processes and Parts

The parts, materials and processes shall be selected and controlled in accordance with documented procedures to satisfy the specified requirements. There is no requirement precluding use of new hardware not yet space qualified or to use only existing qualified hardware. The selection of parts, materials and processes shall be to minimize the variety of parts, related tools and test equipment required in the fabrication, installation and maintenance of the space equipment. Identical electrical connectors, identical fittings or other identical parts shall not be used where inadvertent interchange of items or interconnections can cause possible malfunction. The parts, materials and processes selected shall be of sufficient proven quality to allow the space equipment to meet the functional performance, reliability and strength as required during its life cycle including all environmental effects. For the SUS, these parts may be high reliability commercial or avionics grade parts. Cost-effective alternatives to Class S parts are acceptable. MIL-STD-1547 will be used as guidance in the contractor's parts selection process.

Care shall be exercised in the selection of materials and processes to avoid stress corrosion cracking in highly stressed parts and to preclude failures induced by hydrogen embrittlement.

3.3.1.1 Outgassing

The total mass loss shall be less than 1 percent and the collected volatile condensable material shall be less than 0.1 percent when heated in vacuum to 125°C and collected at 23°C. If required, outgassing tests in accordance with ASTM E595 are acceptable. Parts, materials and processes

shall be selected to ensure that damage or deterioration from the space environment or the outgassing effects in the space environment shall not reduce the performance of the space equipment beyond the specified limits.

3.3.1.2 Cleanliness Control

The particulate cleanliness of internal moving subassemblies shall be maintained to suitable levels to assure compliance with Paragraph 3.2 herein. External surfaces shall be visibly clean.

3.3.1.3 Finishes

The finishes used should be such that completed devices should be resistance to corrosion. The design goal should be that there would be no destructive corrosion of the completed devices when exposed to moderately humid or mildly corrosive environments that can inadvertently occur while unprotected during manufacture or handling, such as possible industrial environments or sea coast fog that may occur prior to launch. Destructive corrosion should be construed as being any type of corrosion which interferes with meeting the specified performance of the device or its associated parts. Protective methods and materials for cleaning, surface treatment and applications of finishes and protective coating should be in accordance with MIL-F-7179. Neither cadmium nor zinc coatings should be used. Chromium plating should be in accordance with QQ-C-320. Nickel plating should be in accordance with QQ-N-290. Corrosion protection of magnesium should be in accordance with MIL-M-3171. Coatings for aluminum and aluminum alloys should be in accordance with MIL-C-5541 or MIL-A-8625.

3.3.2 Electromagnetic Radiation

The fulfillment of the EMI / EMC requirements shall be in accordance with DOD-HDBK-343, MIL-STD-1541A (as modified by DOD-HDBK-343) and WSMCR 127-1 (as modified by DOD-HDBK-343).

3.3.3 Identification or Product Marking

The SUS, each vehicle, its components and interchangeable subassemblies should be identified. The identification may be attached to, etched in or marked directly on the item. The identification should utilize suitable letter size and contrasting colors, contrasting surface finishes or other techniques to provide identification that is readily legible. The identification should be capable of withstanding cleaning procedures and environmental exposures anticipated during the service life of the item without becoming illegible. Metal foil identifications may be applied if they can be placed in an area where they cannot interfere with proper operation should they inadvertently become detached.

Metal stamping should not be used. Where practicable, identification on components and subassemblies should be in locations which permit observation of this marking at the next higher level of assembly. Identification at the assembly level shall contain, as a minimum, the following:

a. Item Identification Number
b. Serial Number
c. Lot Number
d. Manufacturer
e. Nomenclature

The marking of any two or more items intended for space applications with the same item number or identification should indicate that they may be capable of being interchangeable without alteration of the items themselves or of adjoining equipment if the items also meet the specified flight accreditation requirements.

3.3.3.1 Data Cards

When size limitations, cost or other considerations preclude marking all applicable information on an item, the identification may simply provide a reference key to cards or documents where the omitted identification information may be found. A copy of the referenced identification information or card shall accompany the item or assembly containing the item during ground tests and ground operations.

3.3.3.2 "NOT FOR FLIGHT" Marking

Items which by intent or by material disposition are not suitable for use in flight, and which could be accidently substituted for flight or flight spare hardware, should be red tagged or stripped with red paint or both to prevent such substitution. The red tag should be conspicuous and marked "NOT FOR FLIGHT". The red paint should be material compatible and the stripes unmistakable.

3.3.4 Workmanship

The SUS should be manufactured, processed, tested and handled such that the finished items are of sufficient quality to ensure reliable operation, safety and service life. The items should be free of defects that would interfere with operational use such as excessive scratches, nicks, burrs, loose material, contamination and corrosion.

3.3.5 Safety

The SUS design shall be such that hazards to personnel, to the system and to the associated equipment are either eliminated or controlled throughout all phases of the system life cycle. The safety requirements shall be in accordance with MIL-STD-1574.

3.3.5.1 Range Safety

The SUS design shall comply with the range safety requirements of WSMCR 127-1 and ESMCR 127-1.

3.3.5.2 Factors of Safety

The factors of safety for structural design and pressure vessel design shall be in accordance with MIL-HDBK-343. Stress and fracture mechanics analyses of pressurized structures shall comply with SDR-550-25.

3.3.6 Human Performance / Human Engineering

Throughout the design and development of the SUS, the applicable criteria in MIL-STD-1472 should be judiciously applied to obtain effective, compatible and safe man-equipment interactions. Provisions such as tabs, collars and different thread sizes shall be employed to prevent incorrect assembly which may impair the intended functions.

3.3.7 Electrical Bonding

The electrical bonding shall be in accordance with MIL-B-5087B.

3.4 DOCUMENTATION

Records documenting the accreditation status of the space equipment shall be maintained following assignment of serial numbers. Each space item shall have inspection records and test records maintained by serial number to provide traceability from system usage to assembly lot data for the devices. Complete records shall be maintained for the space items and shall be available for review during the service life of the system. The records shall indicate all relevant test data, all rework or modifications and all installation and removals for whatever reason.

4.0 QUALITY ASSURANCE PROVISIONS

4.1 GENERAL

This section describes the requirements for the verification process during design, fabrication, acceptance and qualification test programs.

4.1.1 Responsibility for Tests

Unless otherwise specified in the contract or order, the Contractor is responsible for the performance of all test requirements as specified herein. Except as otherwise specified, the Contractor may utilize their own facilities or any commercial laboratory.

4.1.2 Compliance Documents

The SUS quality assurance provisions shall comply with WSMCR 127-1 and DOD-HDBK-343.

4.2 QUALITY CONFORMANCE INSPECTIONS

The unit shall be subject to verification in accordance with this section to demonstrate compliance with this specification. All requirements of Section 3.0 herein shall be verified by one or more of the following methods as specified in Table 4-1.

a. *Inspection* - Inspection is a method of verification consisting of investigations, without the use of laboratory appliances or procedures, to determine compliance with requirements. Inspection is generally nondestructive and includes (but is not limited to) visual examination, manipulation, gauging and measurement.

b. *Demonstration* - Demonstration is a method of verification that is limited to readily observable functional operation to determine compliance with requirements. This method shall not require the use of special equipment or sophisticated instrumentation.

c. *Analysis* - Analysis is a method of verification, taking the form of the processing of accumulated results and conclusions, intended to provide proof that verification of a requirement(s) has been accomplished. The analytical results may be based on engineering study, compilation or interpretation of existing information, similarity to previously verified requirements or derived from lower level examinations, tests, demonstrations or analyses.

c. *Test* - Test is a method of verification that employs technical means, including (but not limited to) the evaluation of functional characteristics by use of special equipment or instrumentation, simulation techniques and the application of established principles and procedures to determine compliance with requirements. The testing will be accomplished by one or more of the test categories in Paragraphs 4.2.1, 4.2.2, 4.2.3 and 4.2.4 .

Table 4-1

VERIFICATION MATRIX

DESIGN REQUIREMENTS		METHOD						
		N/A	ANAL-YSIS	INSPEC-TION	DEMO	TEST	SIMIL-ARITY	VERIFICATION PARAGRAPH REFERENCE
3.0	Requirements	X						N/A
3.1	Prime Item Definition	X						N/A
3.1.1	Functional Definition	X						N/A
3.1.1.1	Functional Interfaces				X	X		4.2, 4.2.3
3.1.1.2	Physical Interfaces			X				4.2
3.2	Characteristics	X						N/A
3.2.1	Performance	X						N/A
3.2.1.1	Functional Characteristics	X						N/A
3.2.1.1.1	Ejection from Host Vehicle		X			X		4.2, 4.2.2
3.2.1.1.2	Orbit Transfer		X			X		4.2, 4.2.2
3.2.1.1.3	Orbit Insertion Accuracy		X					4.2
3.2.1.1.4	Contamination and Collision Avoidance		X			X		4.2, 4.2.2
3.2.1.2	Life	X						N/A
3.2.1.2.1	Storage Life		X					4.2
3.2.1.2.2	Operating Life – Pre-Flight		X					4.2
3.2.1.2.3	Operating Life - On Orbit		X					4.2
3.2.2	Physical Characteristics	X						N/A
3.2.2.1	Weight		X	X				4.2
3.2.2.2	Dimensions			X				4.2
3.2.2.3	Fundamental Frequency		X			X		4.2, 4.2.1
3.2.2.4	Handling and Transport						X	4.2
3.2.2.5	Storage		X					4.2
3.2.2.6	Durability		X	X		X		4.2, 4.2.2
3.2.2.7	Health and Safety		X					4.2

Figure 3-2

		METHOD						
DESIGN REQUIREMENTS		N/A	ANAL-YSIS	INSPEC-TION	DEMO	TEST	SIMIL-ARITY	VERIFICATION PARAGRAPH REFERENCE
3.2.3	Reliability		X					4.2
3.2.4	Maintainability		X					4.2
3.2.5	Environmental Conditions	X						N/A
3.2.5.1	Non-Operating Environments – Transportation and Storage	X						N/A
3.2.5.1.1	Humidity		X					4.2
3.2.5.1.2	Ambient Air Temperature		X					4.2
3.2.5.1.3	Ambient Pressure		X					4.2
3.2.5.2	Launch Environments	X						N/A
3.2.5.2.1	Thermal Environment		X			X		4.2, 4.2.2
3.2.5.2.2	Random Vibration		X			X		4.2, 4.2.2
3.2.5.2.3	Acoustics		X					4.2
3.2.5.2.4	Pyroshock					X		4.2.2
3.2.5.2.5	Acceleration		X			X		4.2, 4.2.2
3.2.5.2.6	Combine Loads		X			X		4.2, 4.2.2
3.2.5.3	Operating Environments – On Orbit	X						N/A
3.2.5.3.1	Thermal		X			X		4.2, 4.2.2
3.2.5.3.2	Pressure		X			X		4.2, 4.2.2
3.3	Design and Construction	X						N/A
3.3.1	Materials, Processes and Parts		X				X	4.2
3.3.1.1	Outgassing		X				X	4.2
3.3.1.2	Cleanliness Control			X				4.2
3.3.1.3	Finishes		X	X			X	4.2
3.3.2	Electromagnetic Radiation					X		4.2.1
3.3.3	Identification or Product Marking			X				4.2
3.3.3.1	Data Cards			X				4.2
3.3.3.2	"NOT FOR FLIGHT" Marking			X				4.2
3.3.4	Workmanship			X				4.2
3.3.5	Safety		X					4.2
3.3.5.1	Range Safety		X					4.2
3.3.5.2	Factors of Safety		X					4.2
3.3.6	Human Performance / Human Engineering		X					4.2
3.4	Documentation	X						N/A

d. *Similarity* – Similarity is the process of comparing a current item with a previous item, taking into consideration configuration, test data, application and / or environment. Qualification by similarity shall be in accordance with MIL-HDBK-340.

4.2.1 Development Tests

The SUS development testing shall be in accordance with Figure 4-1. The SUS configuration shall be appropriate for the testing such that the results are applicable to the production design.

4.2.2 Qualification Tests

The SUS shall be tested to verify the requirements of Section 3 as shown in Figure 4-2. The test equipment accuracies and tolerances shall be in accordance with Section 4.2.6. The acceptance tests shall be in accordance with Section 4.2.3.

4.2.3 Acceptance Tests

Acceptance tests will verify the flight readiness of the SUS using appropriate flight simulation software and subsystem functional check-outs. Testing will include proof pressure tests and internal and external leakage measurements.

4.2.4 Pre-Launch Validation Tests

Pre-launch validation test shall be conducted in accordance with TBD interface control document.

4.2.5 Components

Prior to assembly, all active components, subassemblies and assemblies shall have been inspected, tested and accepted in accordance with their respective specifications or drawings.

4.2.6 Test Equipment, Accuracies and Tolerances

4.2.6.1 Test Equipment

Test equipment which will meet the performance and accuracy requirements specified herein shall be used in performing the tests. All test equipment shall be calibrated in accordance with MIL-STD-45662.

Development System Test Flow Plan

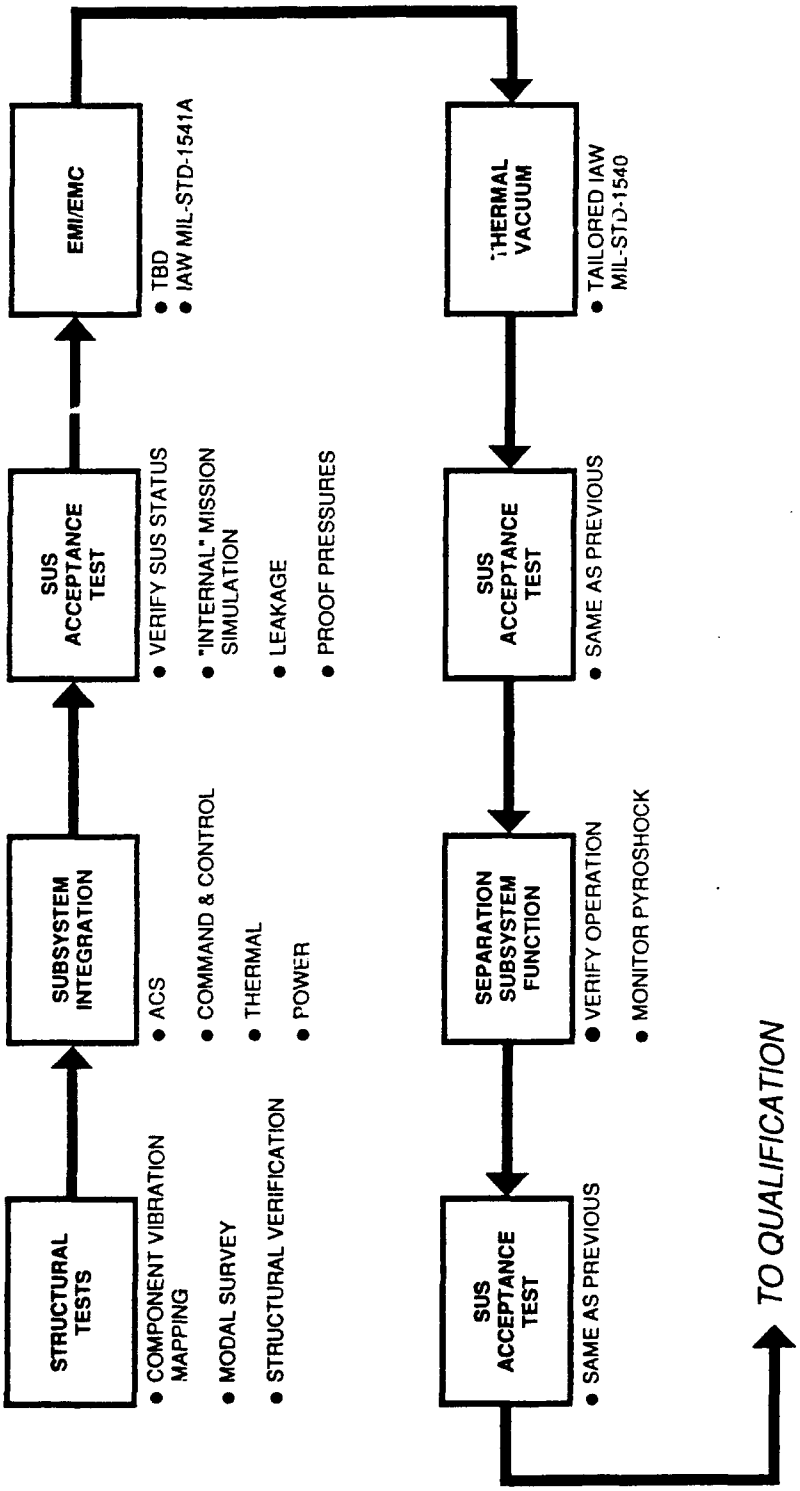

Figure 4-1

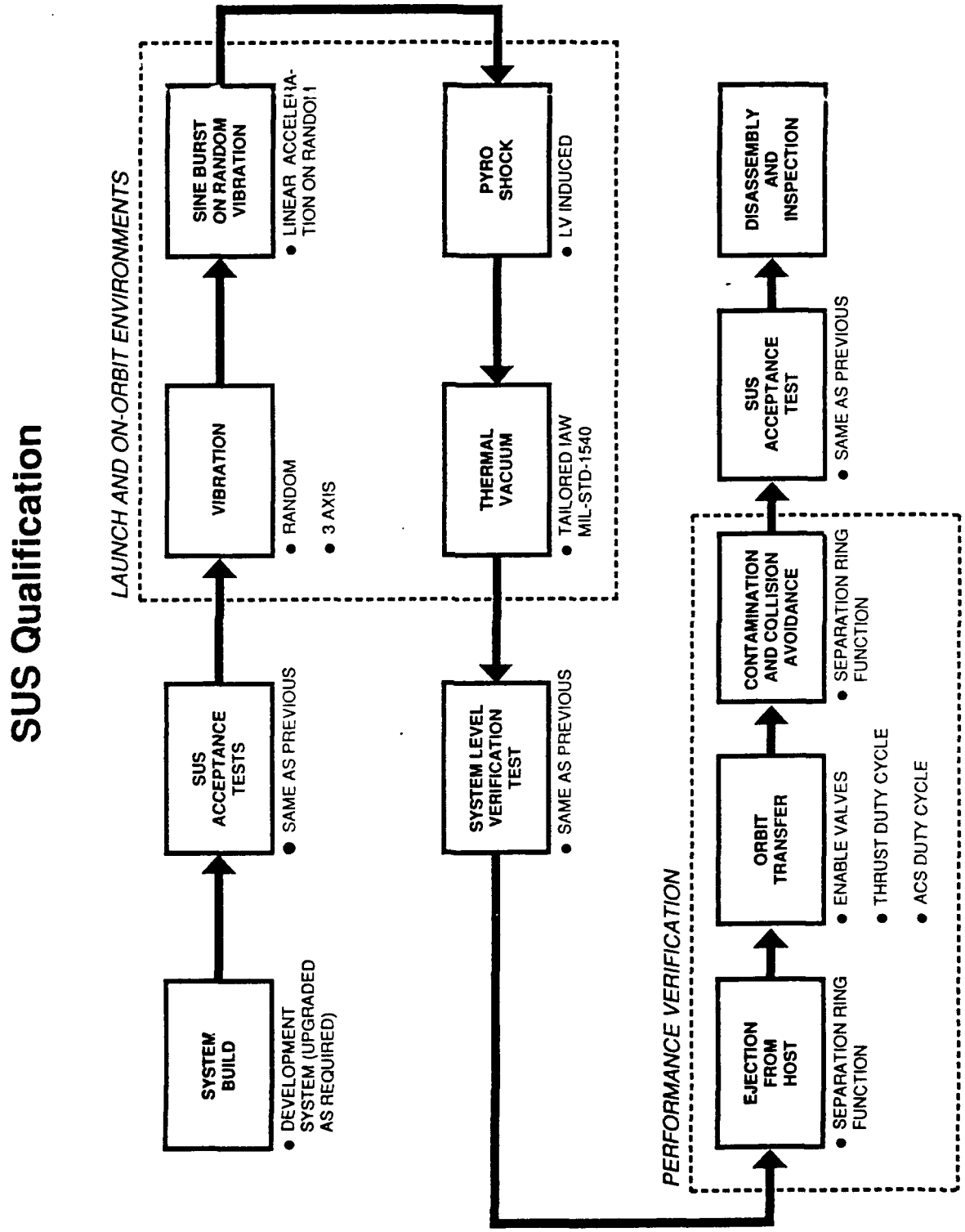
SUS Qualification
LAUNCH AND ON-ORBIT ENVIRONMENTS
SYSTEM BUILD
• DEVELOPMENT SYSTEM (UPGRADED AS REQUIRED)
SUS ACCEPTANCE TESTS
• SAME AS PREVIOUS
VIBRATION
• RANDOM
• 3 AXIS
SINE BURST ON RANDOM VIBRATION
• LINEAR ACCELERATION ON RANDOM
SYSTEM LEVEL VERIFICATION TEST
• SAME AS PREVIOUS
THERMAL VACUUM
• TAILORED IAW MIL-STD-1540
PYRO SHOCK
• LV INDUCED
PERFORMANCE VERIFICATION
EJECTION FROM HOST
• SEPARATION RING FUNCTION
ORBIT TRANSFER
• ENABLE VALVES
• THRUST DUTY CYCLE
• ACS DUTY CYCLE
CONTAMINATION AND COLLISION AVOIDANCE
• SEPARATION RING FUNCTION
SUS ACCEPTANCE TEST
• SAME AS PREVIOUS
DISASSEMBLY AND INSPECTION

Figure 4-2

4.2.6.2 Test Condition Tolerances

The test condition tolerances allowed by this standard shall be applied to the nominal test values specified. Unless otherwise specified, the following maximum allowable tolerances on test conditions shall apply.

Temperature	± 3°C
Pressure	
Above 1.3×10^2 pascals (1 Torr)	± 10%
1.3×10^{-1} to 1.3×10^2 pascals (0.001 Torr to 1 Torr)	± 25%
Less than 1.3×10^{-1} pascals (0.001 Torr)	± 80%
Relative Humidity	± 5%
Acceleration	± 10%
Vibration Frequency	± 2%
Sinusoidal Vibration Amplitude	± 10%
Random Vibration Acceleration	
Power Spectral Density	
20 to 500 Hz (25 Hz or narrower)	± 1.5 dB
500 to 2000 Hz (50 Hz or narrower)	± 3.0 dB
Random Overall grms	± 1.5 dB
Sound Pressure Level	
1/3 Octave Band	± 3.0 dB
Overall	± 1.5 dB
Shock Response Spectrum (Q = 10)	
1/6 Octave Band Center Frequency Amplitude	± 6 DB with 30% of the response spectrum center frequency amplitudes greater than nominal test specification
Static Load	± 5%

4.2.6.3 Ambient Environment

Ambient environment is defined as normal room conditions with temperature at 23 ± 10°C (73 ± 18°F), atmospheric pressure 101 + 2.0 / -23 kilopascals (29.9 + 0.6 / -6.8 in Hg) and relative humidity of 50 ± 30 percent.

5.0 PREPARATION FOR DELIVERY

5.1 PRESERVATION, PACKAGING AND PACKING

The unit shall be packaged to meet the requirements specified in Paragraph 3.2.2.5.

Additionally, electrostatic discharge (ESD) protective packaging shall be used as a part of any storage or shipping packaging if the component contains ESD sensitive parts.

Prior to delivery, the applicable hardware surfaces shall be verified to meed the requirements of Paragraph 3.3.1.1 and then sealed in an appropriate container.

5.2 MARKING FOR SHIPMENT

Shipping container should be marked in accordance with MIL-STD-129. Marking shall include, as a minimum:

a. Nomenclature
b. Part Number
c. FRAGILE – HANDLE WITH CARE
d. Shipping Destination (name and address)
e. Purchase Order Number

6.0 NOTES

6.1 DEFINITION

6.1.1 Flight Ready State

Preflight condition shall consist of the SUS configured to meet this specification combined with the conditions listed below.

a. Installed on the launch vehicle.
b. All appropriate internal cavities pressurized and filled with propellant as designed to meet the specification.
c. Launch vehicle and satellite physical and functional interfaces mated.

d. Batteries activated.

e. Electronics inactive.

6.1.2 Low Level Servicing

Low level servicing is defined as the low-level activity required to maintain the SUS in the following stored condition.

a. Thruster nozzle capped and dessicated.

b. TBD psig internal pressure inall internal cavities.

c. Battery(s) inactive.

mjh #34

NOTES:

1. INTERPRET DIMENSIONS AND TOLERANCES IN ACCORDANCE WITH ANSI Y14.5M-1982.
2. PHANTOM LINE DEFINES MAXIMUM ENVELOPE DIMENSIONS.
3. USE CONTROLLED TOOLING.
4. PROTRUSIONS INTO ENVELOPE BY SATELLITE VEHICLE MAY BE NEGOTIATED.
5. ELECTRICAL INTERFACE, TBD DISCRETES. CONNECTOR TYPE, TBD.
6. SATELLITE VEHICLE INTERFACE PLANE.
7. LAUNCH VEHICLE INTERFACE PLANE.

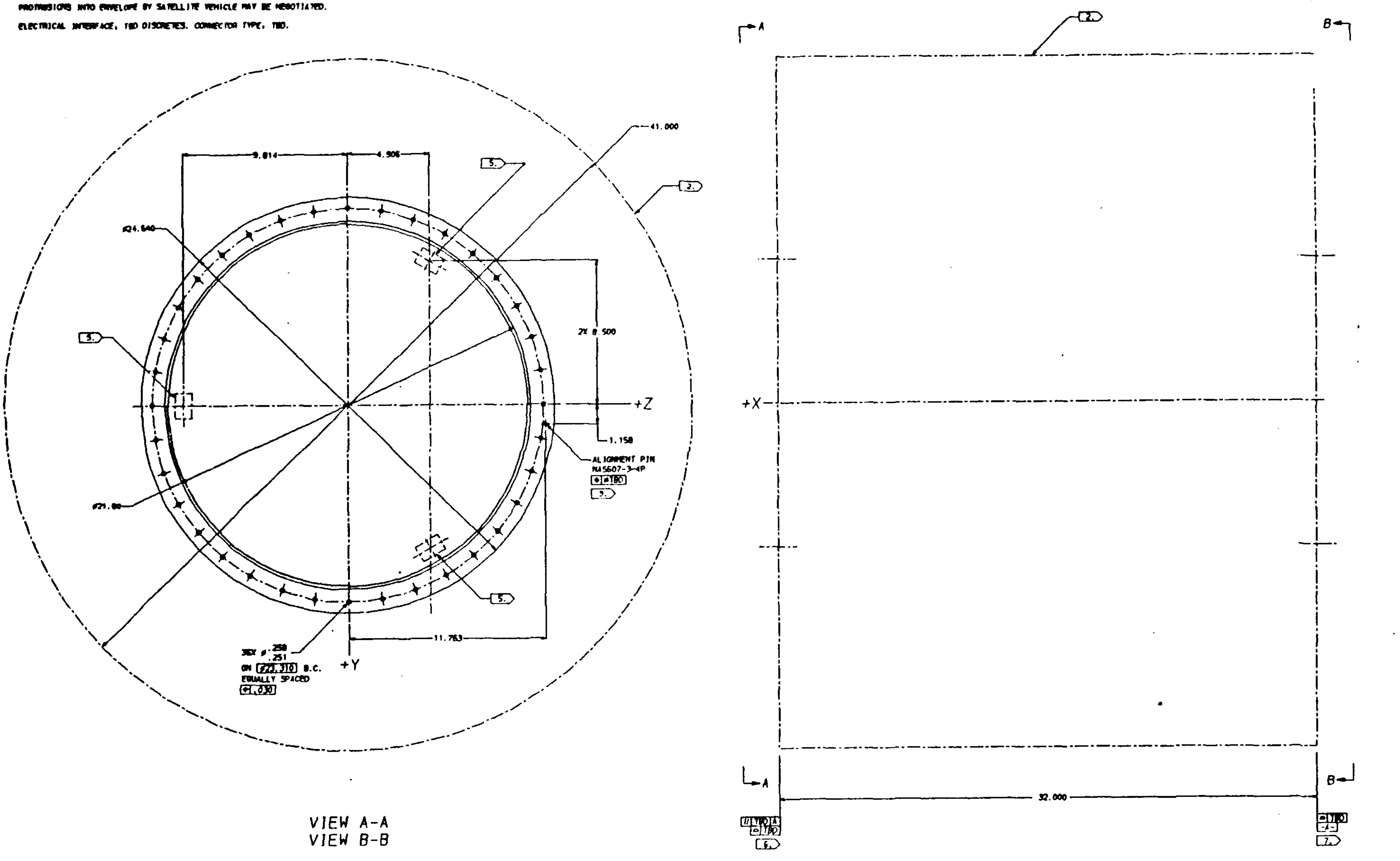

VIEW A-A
VIEW B-B

ROCKET RESEARCH COMPANY

INTERFACE CONTROL
DRAWING - SUS

E 21582 31476 -

APPENDIX B
FINAL REPORT CERTIFICATION

FINAL REPORT CERTIFICATION

Rocket Research Company certifies that 9101 hours were expended (as of 6/29/91) by the following categories of labor for the research effort in the performance of this program.

Description	Hours
Director	357
Program Manager	24
Project Manager	1,505
Project Engineer	1
Development Engineer	966
Thermal/Performance Engineer	1,191
Structural Engineer	696
Component Engineer	58
Design Engineer	1,783
M&P Engineer	1
Reliability Engineer	154
Test Engineer	10
Chemist	3
Contract Administrator	22
Drafter	398
Engineering Aide	65
Cost Analyst	264
Schedule Analyst	6
Technical Publications Supervisor	38
Technical Illustrator	778
Photographer	12
Secretary	379
Documentation Specialist	25
Reproduction Specialist	142
Quality Engineer	1
Subcontract Administrator	1
Model Shop Machinist	216
Assembly	5

APPENDIX C

SUS RECURRING PRICE ESTIMATE
(10 Unit Lot, 1991 Dollars)

SUS RECURRING PRICE ESTIMATE
(10-Unit Lot, 1991 Dollars)

Item	Price
Structure	$ 33,745
Separation	41,224
Propulsion	210,489
ACS	93,111
Command and Control	20,956
Thermal	8,483
Electrical Power	20,888
Assembly	39,500
Mission Definition	17,820
Recurring Software	34,151
ATP	32,000
TOTAL	$555,967