DTIC FILE COPY

(4)

N-1807

NCEL
Technical Note

February 1990

By L. J. Malvar and G. E. Warren

Sponsored By Naval Facilities
Engineering Command

MIXED MODE CRACK PROPAGATION IN CONCRETE

AD-A223 547

DTIC
JUL 0 3 1990

ABSTRACT Two smeared crack approaches to fracture of concrete in mixed mode are implemented in two-dimensional nonlinear concrete elements: (1) tensile stress transfer across cracks and (2) tensile plus shear stress transfer across cracks. To corroborate the analytical model a notched beam under mixed mode loading is then analyzed. In both cases, the stiffnesses normal and parallel the crack were modified to insure a positive definite stiffness matrix. Stresses were corrected and set as functions of the crack slip and crack opening. Equilibrium iterations were implemented to redistribute stress. In both cases, acceptable agreement was found between analytical predictions and experimental results. The consideration of shear stress transfer yielded better predictions, but requires consideration of a non-symmetrical stiffness matrix.

NAVAL CIVIL ENGINEERING LABORATORY PORT HUENEME CALIFORNIA 93043-5003

Approved for public release, distribution is unlimited.

067

METRIC CONVERSION FACTORS

Approximate Conversions to Metric Measures

Symbol	When You Know	Multiply by	To Find	Symbol
		LENGTH		
in	inches	*2.5	centimeters	cm
ft	feet	30	centimeters	cm
yd	yards	0.9	meters	m
mi	miles	1.6	kilometers	km
		AREA		
in^2	square inches	6.5	square centimeters	cm^2
ft^2	square feet	0.09	square meters	m^2
yd^2	square yards	0.8	square meters	m^2
mi^2	square miles	2.6	square kilometers	km^2
	acres	0.4	hectares	ha
		MASS (weight)		
oz	ounces	28	grams	g
lb	pounds	0.45	kilograms	kg
	short tons (2,000 lb)	0.9	tonnes	t
		VOLUME		
tsp	teaspoons	5	milliliters	ml
Tbsp	tablespoons	15	milliliters	ml
fl oz	fluid ounces	30	milliliters	ml
c	cups	0.24	liters	l
pt	pints	0.47	liters	l
qt	quarts	0.95	liters	l
gal	gallons	3.8	liters	l
ft^3	cubic feet	0.03	cubic meters	m^3
yd^3	cubic yards	0.76	cubic meters	m^3
		TEMPERATURE (exact)		
°F	Fahrenheit temperature	5/9 (after subtracting 32)	Celsius temperature	°C

*1 in = 2.54 (exactly). For other exact conversions and more detailed tables, see NBS Misc. Publ. 286, Units of Weights and Measures, Price $2.25, SD Catalog No. C13.10:286.

Approximate Conversions from Metric Measures

Symbol	When You Know	Multiply by	To Find	Symbol
		LENGTH		
mm	millimeters	0.04	inches	in
cm	centimeters	0.4	inches	in
m	meters	3.3	feet	ft
m	meters	1.1	yards	yd
km	kilometers	0.6	miles	mi
		AREA		
cm^2	square centimeters	0.16	square inches	in^2
m^2	square meters	1.2	square yards	yd^2
km^2	square kilometers	0.4	square miles	mi^2
ha	hectares (10,000 m^2)	2.5	acres	
		MASS (weight)		
g	grams	0.035	ounces	oz
kg	kilograms	2.2	pounds	lb
t	tonnes (1,000 kg)	1.1	short tons	
		VOLUME		
ml	milliliters	0.03	fluid ounces	fl oz
l	liters	2.1	pints	pt
l	liters	1.06	quarts	qt
l	liters	0.26	gallons	gal
m^3	cubic meters	35	cubic feet	ft^3
m^3	cubic meters	1.3	cubic yards	yd^3
		TEMPERATURE (exact)		
°C	Celsius temperature	9/5 (then add 32)	Fahrenheit temperature	°F

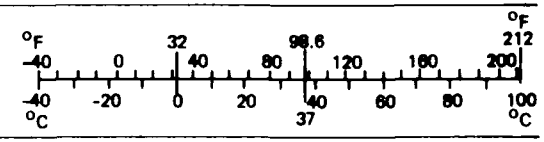

REPORT DOCUMENTATION PAGE

Form Approved
OMB No. 0704-018

Public reporting burden for this collection of information is estimated to average 1 hour per response, including the time for reviewing instructions, searching existing data sources, gathering and maintaining the data needed, and completing and reviewing the collection of information. Send comments regarding this burden estimate or any other aspect of this collection information, including suggestions for reducing this burden, to Washington Headquarters Services, Directorate for Information and Reports, 1215 Jefferson Davis Highway, Suite 1204, Arlington, VA 22202-4302, and to the Office of Management and Budget, Paperwork Reduction Project (0704-0188), Washington, DC 20503.

1. AGENCY USE ONLY *(Leave blank)*

2. REPORT DATE
February 1990

3. REPORT TYPE AND DATES COVERED
Final Oct 88 - Sep 89

4. TITLE AND SUBTITLE
MIXED MODE CRACK PROPAGATION IN CONCRETE

5. FUNDING NUMBERS
PE - 61153N
WU - DN665019

6. AUTHOR(S)
L. J. MALVAR, Assistant Research Engineer, UCLA
G. E. WARREN, NCEL

7. PERFORMING ORGANIZATION NAME(S) AND ADDRESSE(S)
Naval Civil Engineering Laboratory
Port Hueneme, CA 93043-5003

8. PERFORMING ORGANIZATION REPORT NUMBER
TN-1807

9. SPONSORING/MONITORING AGENCY NAME(S) AND ADDRESSE(S)
Naval Facilities Engineering Command
Alexandria, Virginia 22332

10. SPONSORING/MONITORING AGENCY REPORT NUMBER

11. SUPPLEMENTARY NOTES

12a. DISTRIBUTION/AVAILABILITY STATEMENT
Approved for public release; distribution is unlimited.

12b. DISTRIBUTION CODE

13. ABSTRACT *(Maximum 200 words)*

Two smeared crack approaches to fracture of concrete in mixed mode are implemented in two-dimensional nonlinear concrete elements: (1) tensile stress transfer across cracks and (2) tensile plus shear stress transfer across cracks. To corroborate the analytical model a notched beam under mixed mode loading is then analyzed. In both cases, the stiffnesses normal and parallel to the crack were modified to insure a positive definite stiffness matrix. Stresses were corrected and set as functions of the crack slip and crack opening. Equilibrium iterations were implemented to redistribute stress. In both cases, acceptable agreement was found between analytical predictions and experimental results. The consideration of shear stress transfer yielded better predictions, but requires consideration of a non-symmetrical stiffness matrix.

14. SUBJECT TERMS
Fracture mechanics, nonlinear, concrete, mixed mode, smeared cracking

15. NUMBER OF PAGES
47

16. PRICE CODE

17. SECURITY CLASSIFICATION OF REPORT
Unclassified

18. SECURITY CLASSIFICATION OF THIS PAGE
Unclassified

19. SECURITY CLASSIFICATION OF ABSTRACT
Unclassified

20. LIMITATION OF ABSTRACT
UL

CONTENTS

	Page
PURPOSE	1
INTRODUCTION	1
PROBLEM	1
TENSILE STRESS TRANSFER	2
ARC-LENGTH PROCEDURE	2
FAILURE ENVELOPES	3
FINITE ELEMENT MODEL	3
SHEAR TRANSFER	4
SHEAR TRANSFER MODEL	4
IMPLEMENTATION IN FINITE ELEMENT PROGRAM	5
MODEL REPRESENTATION	6
RESULTS	7
DISCUSSION	8
CONCLUSIONS	8
REFERENCES	9
APPENDIXES	
A - CBM, 2-D	A-1
B - CBM, 3-D	B-1
C - General Modifications	C-1
D - Failure Envelope	D-1
E - Derivation of Crack Stiffness Matrix B	E-1

Accession For
NTIS GRA&I X
DTIC TAB
Unannounced
Justification
By
Distribution/
Availability Codes
Avail and/or
Dist Special
A-1
QUALITY INSPECTED 1

PURPOSE

The Naval Facilities Engineering Command (NAVFAC) through the Naval Civil Engineering Laboratory (NCEL) has initiated a project to develop fracture mechanics methodology for design application of reinforced concrete elements in tensile and shear stress states. In a preceding study, analytical modeling methodology of Mode I (opening) was detailed in two and three dimensions, and Mode II crack propagation (shearing) addressed. In this report Mode II modeling methodology is developed and a benchmark mixed mode problem is analyzed. This report supports the project "Fatigue and Fracture of Concrete" in the NAVFAC 6.1 Basic Research Program YR023-03-01, Structural Modeling.

The modifications implemented in the computer program ADINA have been compiled in the appendixes.

INTRODUCTION

Although it is generally recognized that crack initiation in concrete occurs in Mode I (opening), crack propagation is more likely to take place in mixed mode, i.e., involving Mode I and II (shearing), or III (tearing).

Mixed mode crack propagation involves considering the transfer of tensile and shear forces across cracks. Constitutive relations representing the transferred stresses were evaluated (Ref 1). In the present report these constitutive relations are implemented in a general purpose finite element program developed by ADINA R&D Inc. (Ref 2). A benchmark experiment by Arrea and Ingraffea (Ref 3 and 4) is then modeled, with and without considering transfer of shear stresses.

PROBLEM

The mixed mode problem considered is depicted in Figure 1, and concrete properties used are reported in Table 1. In many cases the problem was approached without considering shear transfer across the crack. Initial attempts at modeling the shear transfer using a constant shear retention factor β (typically $\beta \leq 0.1$) yielded results with almost no softening after peak load (Ref 5 and 6). Better representations were obtained either assuming the existence of a Mode II fracture energy (Ref 7), or using a predetermined crack path (Ref 8).

In this study the consideration of a shear transfer model is attempted and its effects observed.

TENSILE STRESS TRANSFER

The transfer of tensile stresses across a crack had already been implemented with a smeared crack approach (Ref 9) using the Crack Band Model (CBM) (see Appendixes A, B, and C). This tension softening behavior involved a negative stiffness, C_s, for the cracked element. The CBM was implemented assuming zero stiffness (actually a very small value was used to avoid a singular stiffness matrix) and then resetting the stresses as a function of the crack opening. These stresses are then redistributed during equilibrium iterations. The stress transferred versus crack width relationship is tabulated in Table 2 (Ref 1) in nondimensional form. The fracture energy, G_f, is related to the stress versus displacement relationship by:

$$G_f = w_o \, f_t \int_0^1 \sigma/f_t \, d(w/w_o)$$

where w = crack width or crack opening

σ = stress transferred at crack width w

w_o = crack width beyond which no stress is transferred

f_t = tensile strength

In a first analysis on the mixed mode problem the CBM alone was used in order to evaluate the importance of considering shear transfer.

The latest version of ADINA (Ref 2) acknowledges the importance of strain softening by including a linear stress release as a function of strain after cracking (Ref 10). However, this stress release is not explicitly linked to fracture energy, and the authors have shown that linearizing the highly nonlinear post peak stress versus strain relationship negatively affects results (Ref 9). Hence, this feature of the latest ADINA version was not used in the present project.

ARC-LENGTH PROCEDURE

The solution of the finite element incremental equations of motion was first attempted using the spherical arc-length and the constant increment of external work procedures described in Reference 11. The post-peak numerical analysis of this experiment has shown to be highly unstable (Ref 5). The adopted approaches did not yield converged equilibrium states past peak load and, thus, were modified.

A type of indirect displacement control (Ref 12) was then adopted: in the arc-length procedure the norm of displacement (involving all nodal points) was replaced by the distance between the two points at the edges of the notch (Appendix C). The vertical component of this distance is referred to as CMSD (Crack Mouth Sliding Displacement). During the test, the CMSD is a monotonically increasing parameter that stabilized the algorithm. In the experiment, the CMSD had been used as feed-back control parameter.

FAILURE ENVELOPES

The failure envelopes used in ADINA (Ref 13) are largely based on biaxial concrete strength experimental results by Kupfer et al. (Ref 14). In the plane stress analytical model, the crack path showed sensitivity to the tensile envelope representation close to the tension/tension zone ($\sigma_1>0$, $\sigma_2>0$, $\sigma_3=0$) (Figure 2). The existing linear envelope in the tension/compression zone was then modified to better match experimental results. The following power relationship was used:

$$\sigma'_t = \sigma_t \left[1 - \left(\frac{{}^t\sigma_i}{\sigma'_c} \right)^n \right]$$

where σ_t = uniaxial cut-off tensile stress

σ'_t = uniaxial cut-off tensile stress under multiaxial conditions

σ'_c = uniaxial compressive failure stress under multiaxial conditions

${}^t\sigma_i$ = principal stress in direction i at time t

$n = 1$ if $\sigma'_c \geq 8000$ psi (563 kp/cm^2)

$= 1 + 0.0002(8000-\sigma'_c)$ if $\sigma'_c < 8000$ psi

Both linear and power envelopes are shown in Figure 2, together with Kupfer et al. results for $\beta p = 315$ kp/cm^2 (4450 psi). βp is the uniaxial compressive strength of 50 by 50 by 200 mm (2 x 2 x 7.9 in.) prisms. The current ADINA addresses this deficiency, but corrects it in a different way (Ref 10):

$$\sigma'_t = \sigma_t \left[1 - 0.75 \frac{{}^t\sigma_i}{\sigma'_c} \right]$$

From Figure 2 it is apparent that the present modification yields a better match. Program modifications are reported in Appendix D.

FINITE ELEMENT MODEL

The finite element mesh used is depicted in Figure 1. Loads of 0.13P and P were applied at points A and B, respectively. In the computer program this is accomplished using an automatic step incrementation method, where the level of externally applied loads is adjusted automatically. In the experiment, a single total load of 1.13P was applied on a steel beam bearing on rollers at points A and B. The point of application of that total load will be referred as point C.

SHEAR TRANSFER

Cracks in reinforced concrete are able to transmit shear forces across crack faces. This transfer is traditionally neglected on the assumption that this would be a conservative simplification. However, Bazant et al. showed that this assumption can be an over simplification (Ref 15 and 16). Crack dilation occurs with shear slip. However, crack dilation is prevented by forces normal to the crack faces, which will have to be compensated by tensiles forces in the reinforcement across the crack.

Shear stresses can be transferred across a crack in three ways: (1) aggregate interlock as a result of the roughness of the crack faces, (2) dowel action or shear resistance of the reinforcement across the crack, and (3) the axial tensile force component in the reinforcement oblique to the plane of cracking.

For members with low reinforcement and for small crack widths, aggregate interlock is the main mechanism of shear transfer. Tests carried out on beams without web reinforcement showed that aggregate interlock accounted for up to 75 percent of the shear transfer (Ref 17). Hence, most attention will be given to this first mechanism of transfer.

SHEAR TRANSFER MODEL

Three accepted empirical models which represent the nonlinear relationships between shear stress and slip are: the Rough Crack Model (RCM) in its original form (Ref 11), or in a modified form (MRCM) (Ref 18), and the Two-Phase Model (TPM) (Ref 19 and 20). The constitutive laws of the MRCM are as follows:

$$\sigma_{nn} = -a_{12}\left(\frac{r}{1+r^2}\right)^{0.25}\sqrt{\delta_n \sigma_{nt}} \qquad \text{(always compressive)} \qquad (1)$$

$$\sigma_{nt} = \tau_o\left(1-\sqrt{\frac{2\delta_n}{d_a}}\right) r \frac{a_3 + a_4\left|\frac{r}{4}\right|^3}{1 + a_4 r^4} \qquad (2)$$

in which δ_n = crack opening ($\delta_n \geq 0$)

δ_t = relative slip

σ_{nn} = interface normal stress

σ_{nt} = interface shear stress

$r = \delta_t/\delta_n$

$a_{12} = 0.62$

$$a_3 = 2.45/\tau_o$$

$$a_4 = 2.4(1-4/\tau_o)$$

$$\tau_o = 0.25\ f'_c$$

and

$$\begin{bmatrix} d\sigma_{nn} \\ d\sigma_{nt} \end{bmatrix} = \begin{bmatrix} B_{nn} & B_{nt} \\ B_{tn} & B_{tt} \end{bmatrix} \begin{bmatrix} d\delta_n \\ d\delta_t \end{bmatrix} \tag{3}$$

where $B = \begin{bmatrix} B_{nn} & B_{nt} \\ B_{tn} & B_{tt} \end{bmatrix}$ is the crack stiffness matrix.

The derivation of B is shown in Appendix E.

IMPLEMENTATION IN FINITE ELEMENT PROGRAM

Transfer of shear stresses was implemented by combining the MRCM and the CBM. The incremental flexibility matrix due to the solid concrete and including strain softening in tension is given by (Ref 21):

$$\{d\varepsilon\} = D^{sc}\ \{d\sigma\}$$

or

$$\begin{bmatrix} d\varepsilon_{nn} \\ d\varepsilon_{tt} \\ d\varepsilon_{nt} \end{bmatrix} = \begin{bmatrix} 1/E & -\mu/E & 0 \\ -\mu/E & 1/E & 0 \\ 0 & 0 & 1/G \end{bmatrix} \begin{bmatrix} d\sigma_{nn} \\ d\sigma_{tt} \\ d\sigma_{nt} \end{bmatrix} \tag{4}$$

where μ = Poisson's ratio.

In addition, since we assume strain softening in tension to be present, the slope C_s of the strain softening branch has to be taken into account. The crack stiffness is then:

$$C^{cr} = \begin{bmatrix} wB_{nn}+C_s & wB_{nt} \\ wB_{tn} & wB_{tt} \end{bmatrix} \tag{5}$$

For very small values of the crack opening, C_s is large, but B_{nn} is almost zero; whereas, when the crack opening reaches about 0.1mm, the opposite holds.

The incremental stiffness matrix can be obtained as follows:

$$D = D^{sc} + C^{cr-1}$$

$$C = D^{-1}$$

yielding

$$C = \frac{1}{1+wB_{tt}/G + (1-\mu)(wB_{nn}+C_s+\Phi w^2/G)/2G} \cdot \begin{bmatrix} \Phi w^2/G+wB_{nn}+C_s & \mu(\Phi w^2/G+wB_{nn}+C_s) & wB_{nt} \\ \mu(\Phi w^2/G+wB_{nn}+C_s) & \Phi w^2/G+wB_{nn}+C_s+2(1+\mu)wB_{tt}+E & \mu wB_{nt} \\ wB_{tn} & \mu wB_{tn} & (1-\mu)\Phi w^2/2G+wB_{tt} \end{bmatrix} \quad (6)$$

where $\Phi = B_{nn}B_{tt} - B_{nt}B_{tn}$.

This yields an incremental stiffness matrix which is not symmetrical and is not guaranteed to be definite positive.

Since ADINA considers only symmetric matrices, the solution was attempted using a modified stiffness, and then correcting the stresses at every iteration for each load step increment. It was then assumed that:

$$\mu = 0$$

and to insure definite positiveness

$$C_{11} = 0^+ \qquad \text{if } C_{11} < 0$$

$$C_{31} = C_{13} = \sqrt{C_{11}C_{33}} - 0^+$$

where 0^+ is a small positive number.

MODEL REPRESENTATION

To evaluate the effects of shear transfer, a 100 by 100 by 100 mm (4 x 4 x 4 in.) concrete finite element was first cracked in tension, then sheared in the perpendicular direction (Figure 3), in displacement control. Given the nodal displacements, strains at the Gauss points are evaluated, then an iterative process determines crack slip, crack dilatation, and concrete deformation, using formulas (1), (2), C_s, and:

$$\delta_n = (\varepsilon_n - \sigma_{nn}/E)w$$

$$\delta_t = (\varepsilon_t - \sigma_{nt}/G)w$$

The model behavior is predicted using all three formulations (RCM, MRCM, TPM). For each case, Figure 4 shows the shear and normal loads transferred. The TPM values were capped to the maximum predicted by the RCM. It is observed that the dilatancy induces vertical compression (along the z axis). If reinforcing bars perpendicular to the cracks were present, the dilatancy would increase the tension in the bars at the crack locations.

From Figure 4 it is apparent that all three models yield very similar shear transfer capacity, but the normal stress due to dilatation is significantly higher for the RCM. Since more normal stress experimental data appears to back the MRCM and TPM, the RCM was discarded. In the mixed mode analysis, the more recent MRCM formulation was chosen, since it presents no discontinuity in the stress gradient.

RESULTS

In order to evaluate the importance of modeling stress transfer across cracks, the analytical model was first run with no transfer, i.e., assuming total stress release right after cracking. Since the standard algorithms did not converge, the indirect displacement method was used, with a very low fracture energy (0.0002 N/mm) equivalent of a sudden stress release. Results for this first run are shown in Figure 5.

The analysis was then carried out considering only tensile stress transfer across the cracks (CBM). Finally, the MRCM was added and a new analysis completed (CBM+MRCM). Results for both cases are shown in the form of load versus CMSD (Figure 5), and load versus vertical displacement at point C (Figure 6). The vertical displacement at point C was derived by linear interpolation of the vertical displacements of points A and B. Data points indicating the reported range of experimental results (Ref 3) are shown in Figure 5.

Convergence of the arc-length algorithm was only obtained for carefully chosen control parameters. These parameters control the size of the step in the load-CMSD space (ALFA), the maximum number of iterations allowed for each time step (ITEMAX), the maximum displacement at control point E (DISPP), and energy convergence criteria (ETOL) (Ref 11). In each case they were respectively:

Parameter	No Transfer	CBM	CMB+MRCM
ITEMAX	45	45	30
ETOL	10^{-6}	10^{-6}	5.10^{-4}
DISPP	-0.015	-0.015	-0.015
ALFA	0.4	0.4	0.5

The crack pattern for the last loading step is indicated in Figure 7 (CBM case). Figure 8 shows the deformed shape obtained for the last step (CBM case).

DISCUSSION

Figure 6 indicates that the displacement at point C presents a sharp snap-back past peak load. This explains why displacement control at that point cannot yield the post peak response. The displacement at both points A and B shows a similar behavior, which explains why the norm of displacement in the arc-length procedure was unsuccessful.

Figure 5 shows that considering tensile stress transfer alone yields a conservative behavior prediction. The maximum load is underestimated by about 20 percent, and the post peak load carrying capacity is lower. However, the shape of the strain softening portion is similar. A higher value of G_f would yield a better match to the experimental peak load and post peak response (Ref 8).

The crack pattern (Figure 7) still differs from the reported experimental crack path. It was, however, observed that a small variation in the mesh size, or initially larger load step sizes, would affect the path or result in bifurcation points. Similarly, stiffer bearing plates would bring the crack path closer to the notch plane. The crack path would easily follow any of the different directions indicated in Figure 9. This would explain the discrepancies in crack paths found by different authors (Ref 22, 23, 24, and 25) (using a similar but symmetrical specimen). For example, the experimental crack path obtained in Reference 23 coincides with the analytical crack pattern shown in Figure 7.

Should tensile stress transfer not have been considered, the maximum load carrying capacity of the analytical model would have been reached as soon as the first tensile cracks formed (around 50 kips) (Figure 5). This is obviously an inadequate representation of the experimental behavior.

Transfer of both tensile and shear stress is considered best in matching experimental behavior. The peak load is higher and the post peak behavior is closer to experimental results. However, in order to obtain the complete post peak behavior, a nonsymmetrical stiffness matrix would have to be considered. This would present additional difficulties, such as (1) implementation in a new program with a nonsymmetrical solver, and (2) increase in computation time. The increased accuracy has to be weighed against the increased cost in implementing shear transfer. In this case, the crack pattern remained similar to the previous one.

CONCLUSIONS

The consideration of shear stress transfer across the propagating cracks yielded a better prediction of the experimental results. However, the resultant stiffness matrix is nonsymmetrical and would require implementation in a program with a nonsymmetric solver. This would enhance the convergence of the indirect displacement control algorithm.

The exclusive consideration of tensile stress transfer yielded good results up to peak load. Beyond this point, the loads are underestimated, although the shape of the unloading branch matches the experimental trend.

This could be an acceptable representation of mixed mode behavior as long as it is kept in mind that a conservative post peak behavior will be obtained. Finally, it was shown that inadmissible results are obtained if both tensile and shear stresses are assumed to completely vanish upon cracking.

REFERENCES

1. Naval Civil Engineering Laboratory. Technical Report R-926: Analytical modeling of reinforced concrete in tension, by L.J. Malvar and G.E. Warren. Port Hueneme, CA, Apr 1989.

2. ADINA R&D Inc. ADINA: A finite element program for automatic dynamic incremental nonlinear analysis, Watertown, MA, Dec 1987.

3. M. Arrea and A.R. Ingraffea. "Mixed-mode crack propagation in mortar and concrete," Report No. 81-13, Department of Structural Engineering, Cornell University, Ithaca, NY, 1981.

4. RILEM Technical Committee 90-FMA. "Fracture mechanics of concrete/ applications," Second Draft Report over the State of the Art, Division of Structural Engineering, Lulea University of Technology, S-951 87 Lulea, Sweden, May 1987.

5. J.G. Rots, P. Nauta, G.M.A. Kusters, and J. Blaauwendraad. "Smeared crack approach and fracture localization in concrete," HERON, vol 30, no. 1, 1985.

6. P. Gergely and R.N. White, Cornell University, J.W. Frenay and H.W. Reinhardt, Delft University, editors. "Concrete Mechanics," cooperative research between institutions in the Netherlands and the USA, Third Meeting, Delft University of Technology, The Netherlands, Jun 1983.

7. J.G. Rots and R. de Borst. "Analysis of mixed-mode fracture in concrete," Journal of Engineering Mechanics, American Society of Civil Engineers, vol 113, no. 11, Nov 1987, pp 1739-1758.

8. J.G. Rots. Computational modeling of concrete fracture, Ph.D. Dissertation, Delft University of Technology, The Netherlands, Sep 1988.

9. Naval Civil Engineering Laboratory. Technical Report R-924: Fracture energy for three point bend tests on single edge notched beams, by L.J. Malvar and G.E. Warren. Port Hueneme, CA, Mar 1988.

10. K-J. Bathe, J. Walzack, A. Welch, and N. Mistry. "Nonlinear analysis of concrete structures," Computers and Structures Journal, vol 32, no. 3/4, 1989, pp 563-590.

11. K-J. Bathe and E.N. Dvorkin. "On the automatic solution of nonlinear finite element equations," Computers and Structures Journal, vol 17, no. 5/6, 1983, pp 871-879.

12. R. de Borst. Nonlinear analysis of frictional materials, Ph.D. Dissertation, Delft University of Technology, The Netherlands, 1986.

13. K-J. Bathe and S. Ramaswamy. "On three dimensional nonlinear analysis of concrete structures," Nuclear Engineering and Design, vol 52, 1979, pp 385-409.

14. H. Kupfer, H. Hilsdorf, and H. Rush. "Behavior of concrete under biaxial stresses," American Concrete Institute Journal, vol 66, 1969, pp 656-666.

15. Z.P. Bazant and T. Tsubaki. "Optimum slip-free limit design of concrete reinforcing nets," Journal of Structural Engineering, American Society of Civil Engineers, vol 105, no. ST2, Feb 1979, pp 327-346.

16. Z.P. Bazant and P. Gambarova. "Rough cracks in reinforced concrete," Journal of Structural Engineering, American Society of Civil Engineers, vol 106, no. ST4, Apr 1980, pp 819-843.

17. S. DeiPoli, P.G. Gambarova, and C. Karakoc. "Aggregate interlock role in R/C thin webbed beams in shear," Journal of Structural Engineering, American Society of Civil Engineers, vol 113, no. 1, Jan 1987, pp 1-19.

18. R.C. Fenwick and T. Paulay. "Mechanisms of shear resistance in concrete beams," Journal of Structural Engineering, American Society of Civil Engineers, vol 94, no. ST10, Oct 1968, pp 2325-2350.

19. J.C. Walraven and H.W. Reinhardt. "Theory and experimentation on the mechanical behavior of cracks in plain and reinforced concrete subjected to shear loading," HERON, vol 26, no. 1A, 1981.

20. H.W. Reinhardt and J.C. Walraven. "Crack in concrete subject to shear," Journal of Structural Engineering, American Society of Civil Engineers, vol 108, no. ST1, Jan 1982, pp 207-224.

21. Z.P. Bazant and B.H. Oh. "Crack band theory for fracture of concrete," Materials and Structures Journal, vol 16, no. 93, May-June 1983, pp 155-177.

22. Z.P. Bazant and P.A. Pfeiffer. "Shear fracture tests of concrete," Materials and Structures Journal, vol 19, no. 110, 1985, pp 111-121.

23. A.R. Ingraffea and M.J. Panthaki. "Analysis of 'shear fracture' tests of concrete beams," Finite Element Analysis of Reinforced Concrete Structures, American Society of Civil Engineers; in Proceedings of a seminar sponsored by the Japan Society for the Promotion of Science and the U.S. National Science Foundation, Tokyo, Japan, 1985, pp 151-173.

24. Z.P. Bazant and P.A. Pfeiffer. Comment on Ingraffea and Panthaki's "analysis of shear fracture tests of concrete," Finite Element Analysis of Reinforced Concrete Structures, American Society of Civil Engineers; in Proceedings of a seminar sponsored by the Japan Society for the Promotion of Science and the U.S. National Science Foundation, Tokyo, Japan, 1985, pp 174-183.

25. S. Melin. "Why are crack paths in concrete and mortar different from those in PMMA?" Materials and Structures Journal, vol 22, no. 127, Jan 1985, pp 23-27.

Table 1. Concrete Properties

Fracture Energy	G_f = 0.055 N/mm
Compressive Strength	f'c = 45.5 N/mm^2
Tensile Strength	f_t = 2.80 N/mm^2
Modulus of elasticity	E = 24.8 GPa

Table 2. Stress - Crack Width Relationship

w/w_o	σ/f_t
0.00	1.0000
0.05	0.7082
0.10	0.5108
0.15	0.3817
0.20	0.2986
0.25	0.2446
0.30	0.2080
0.40	0.1596
0.60	0.0904
0.80	0.0361
1.00	0.0000

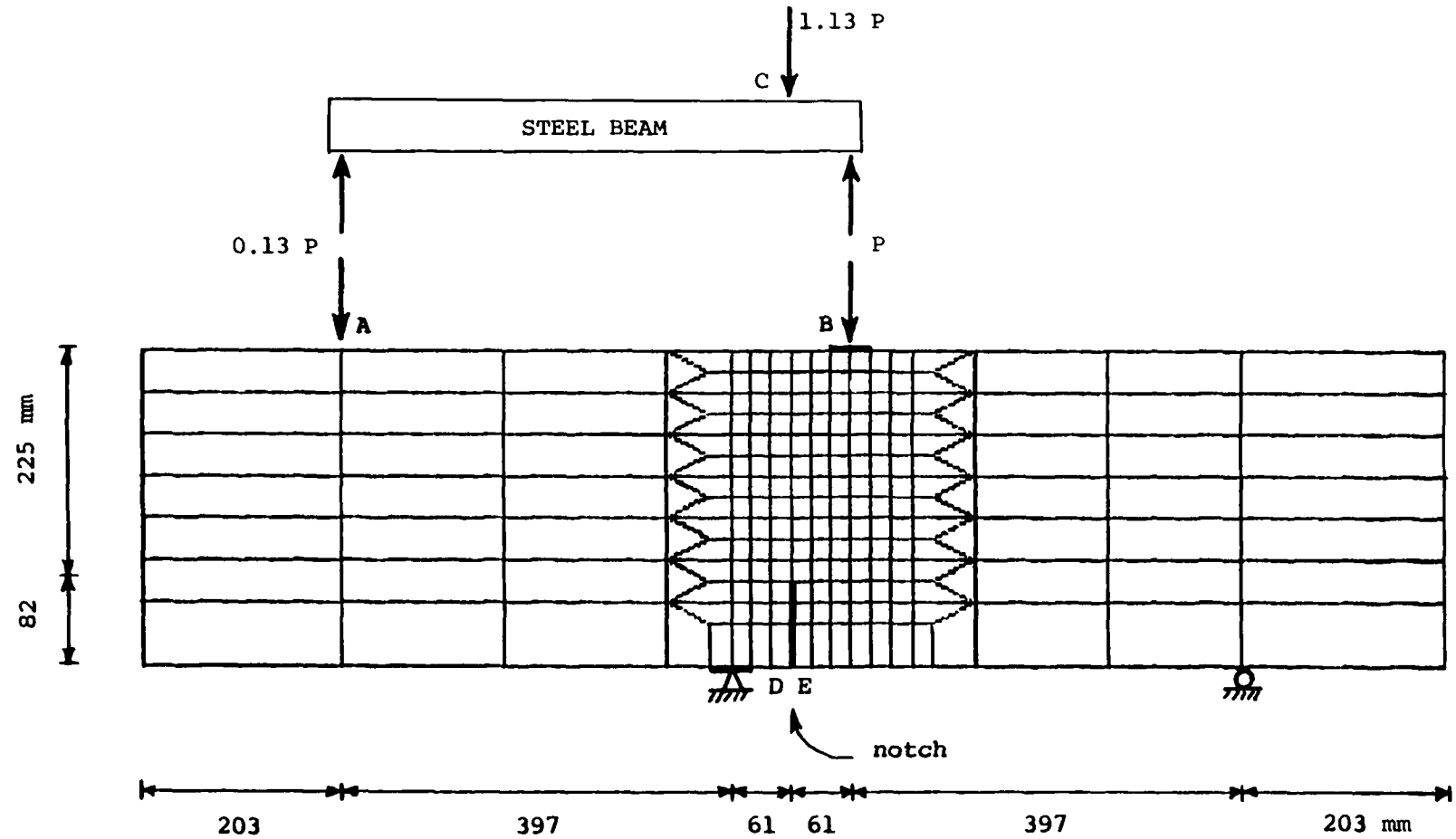

Figure 1. Experimental setup and finite element mesh.

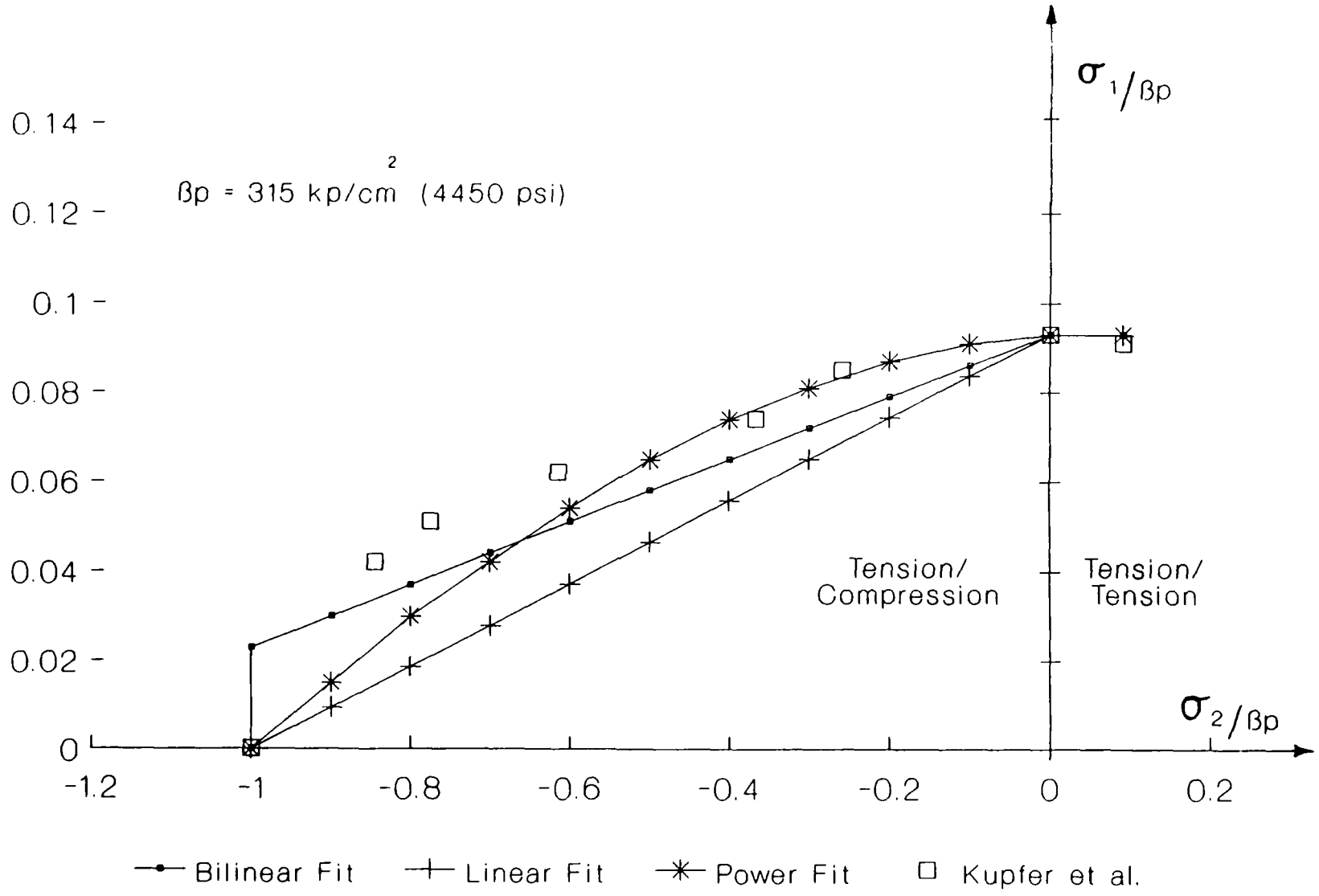

Figure 2. Tension-compression failure envelope.

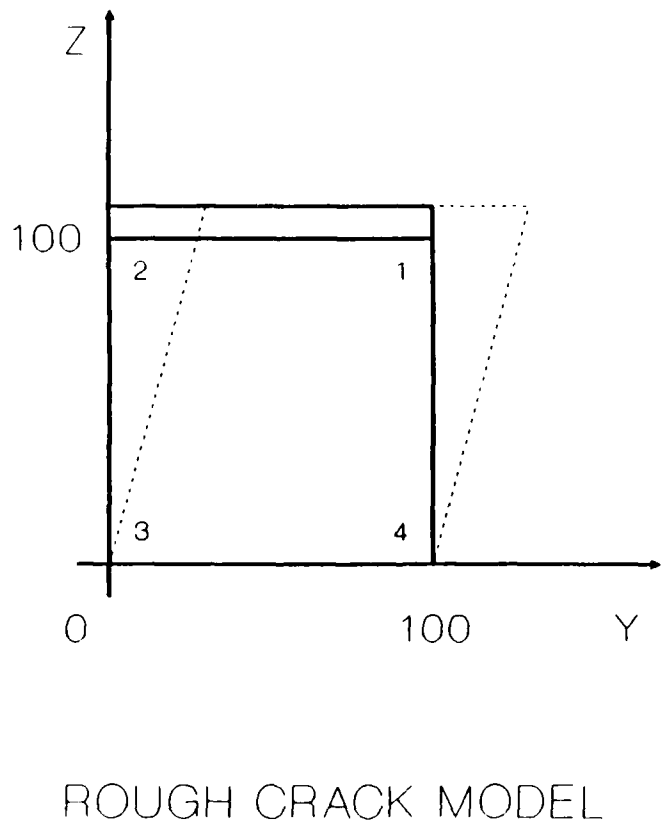

Figure 3. Shear transfer experiment.

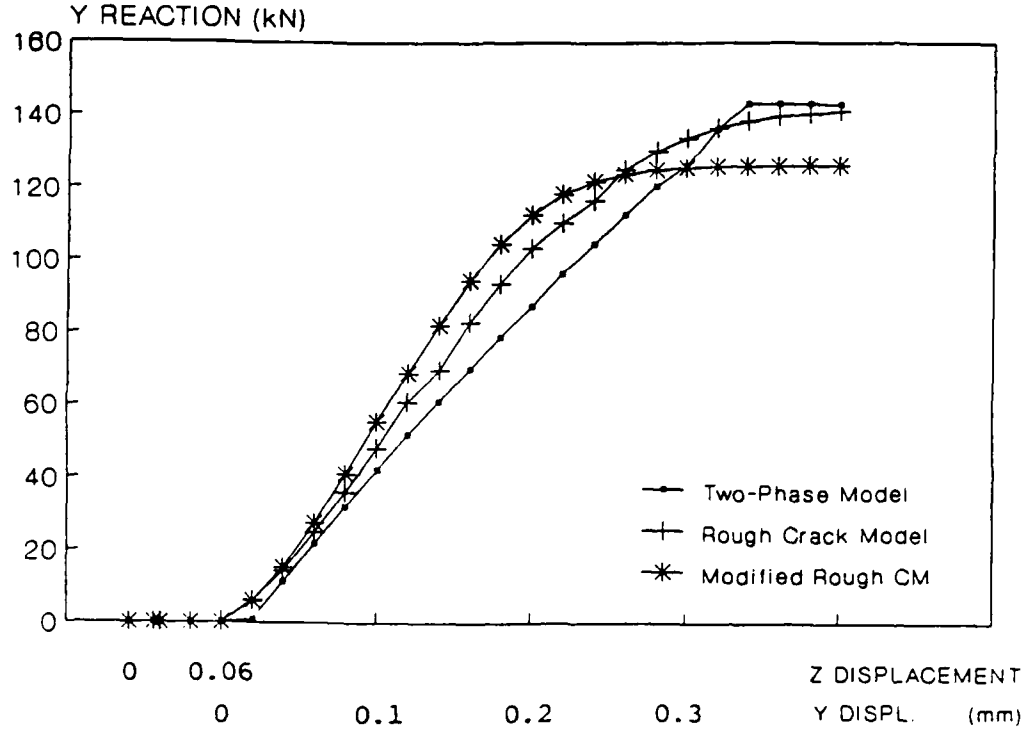

(a) Y Reaction (kN)

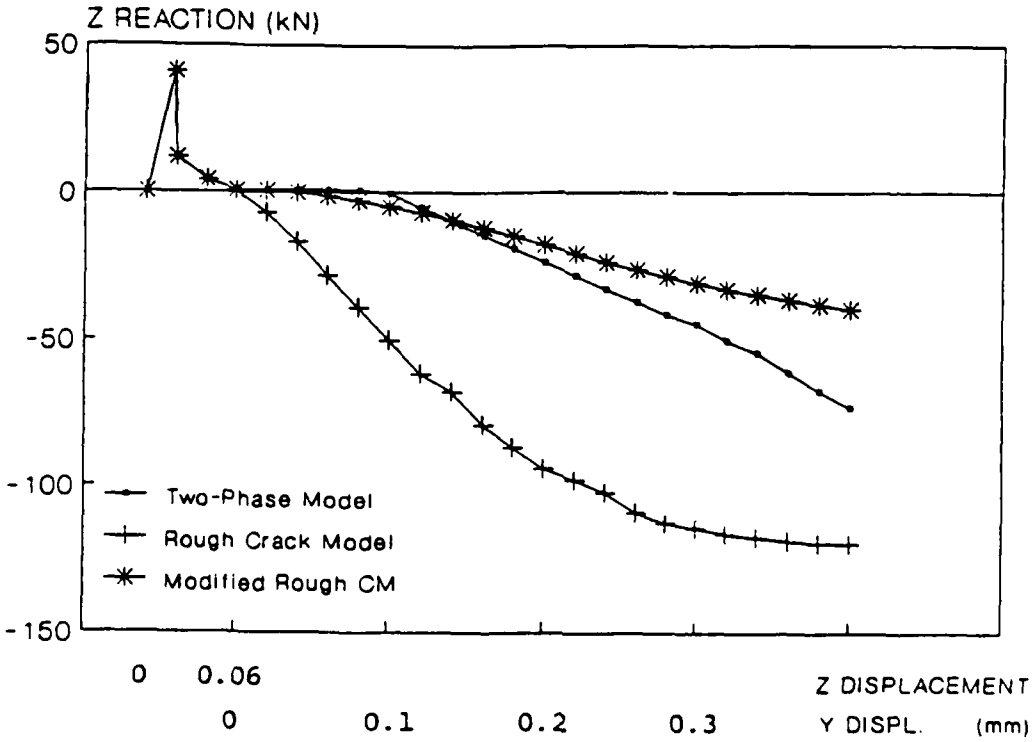

(b) Z Reaction (kN)

Figure 4. Shear transfer models.

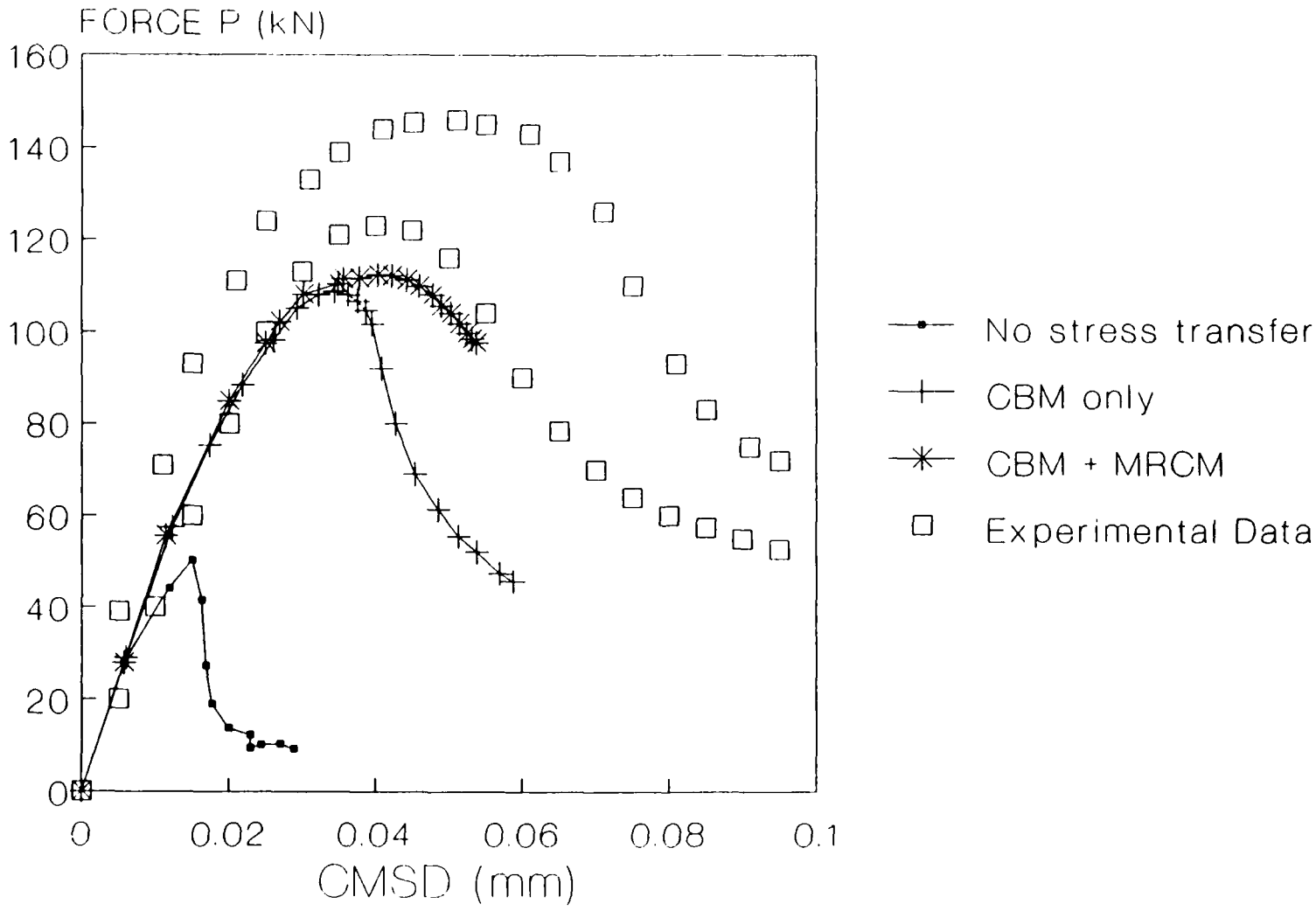

Figure 5. Load versus CMSD plots.

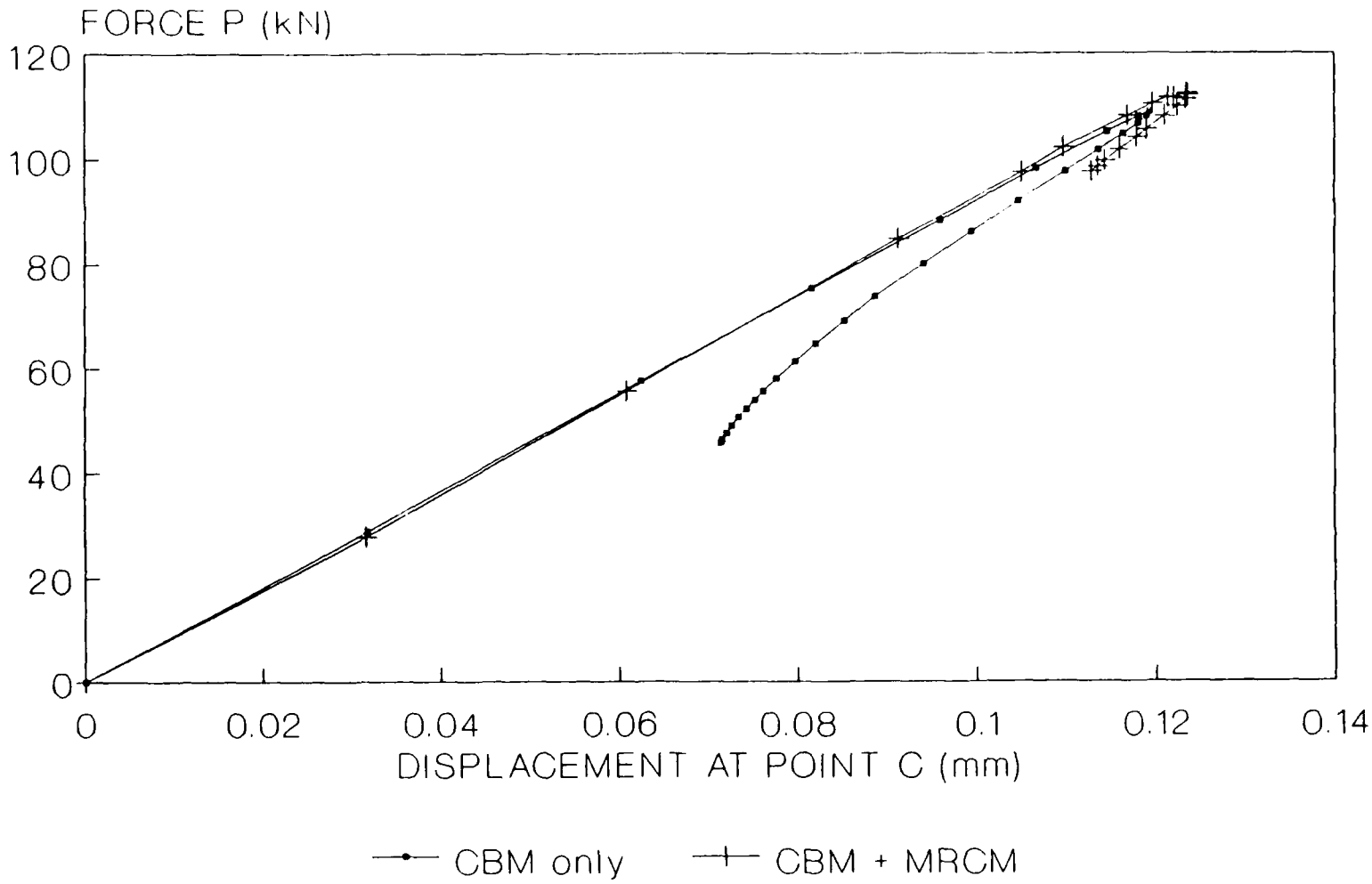

Figure 6 Load versus load point vertical displacement.

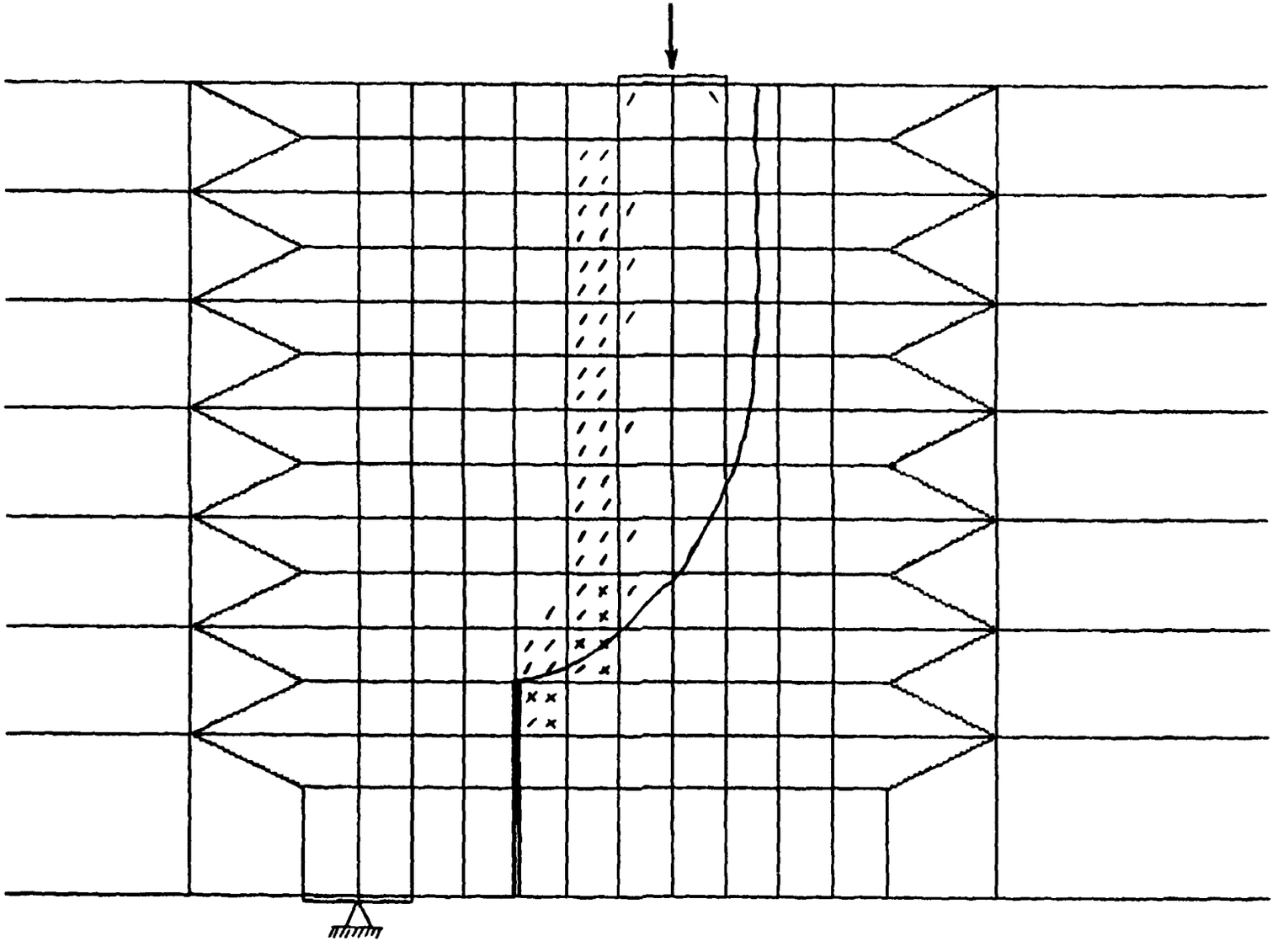

Figure 7. Crack pattern.

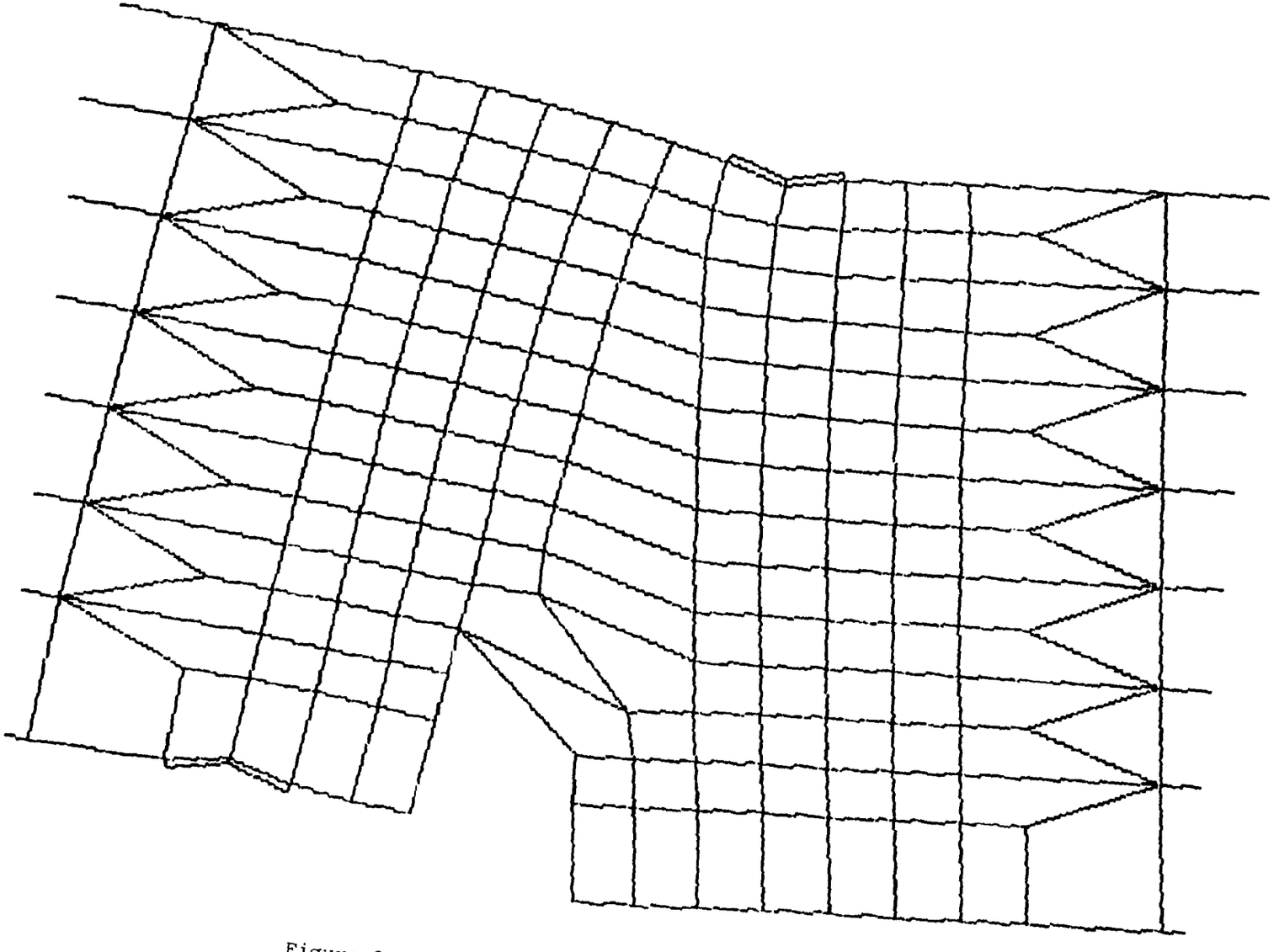

Figure 8. Deformed shape at failure.

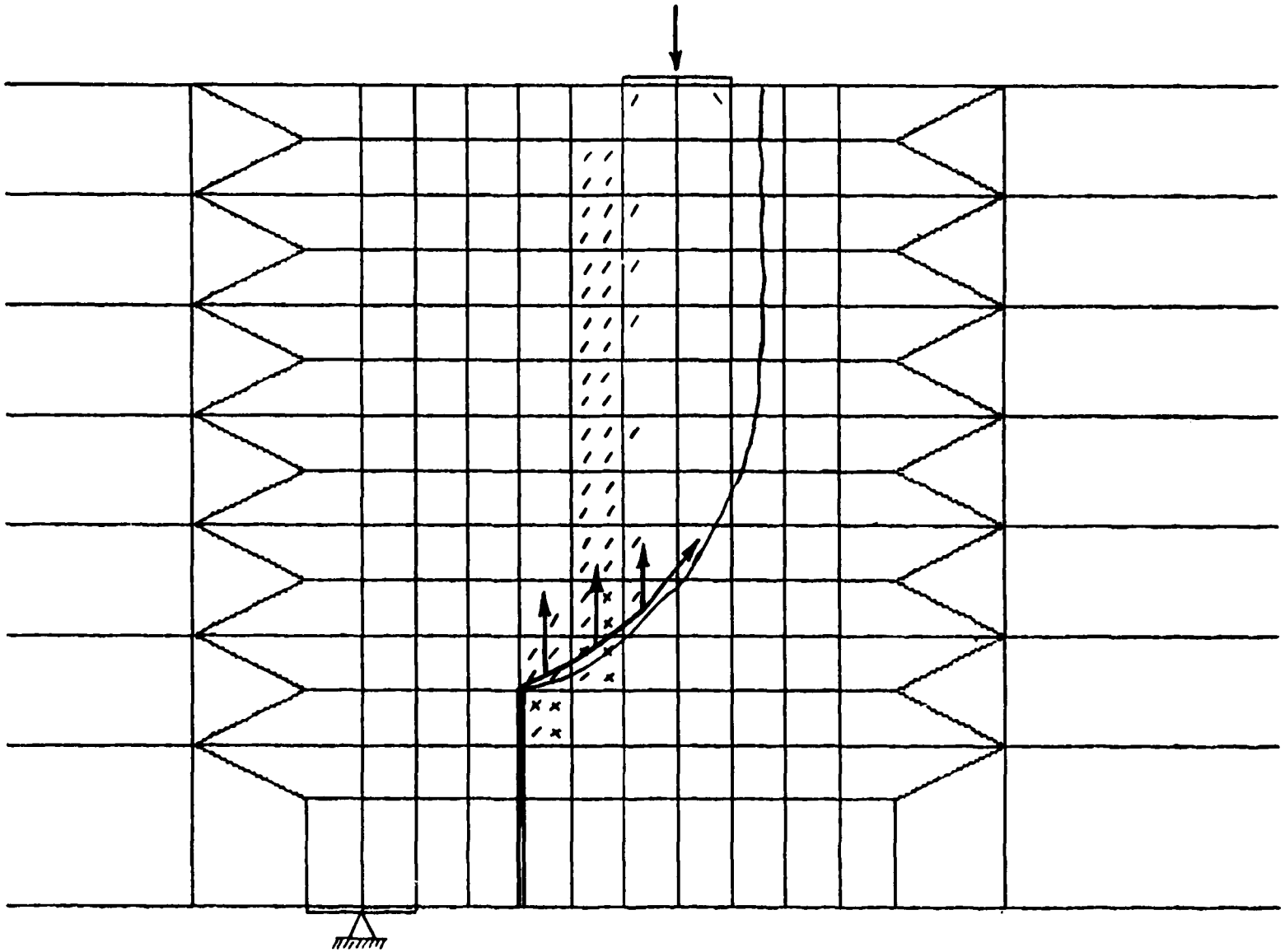

Figure 9. Alternate crack paths

Appendix A

CBM, 2-D

The following are changes implemented in the two-dimensional element formulation; namely, in the subprograms TODMFE.F77 and ELT2D4.F77 for tensile stress transfer. Although not mentioned in this report, formulation for the Rotating Crack Model is also included (see Ref 1).

Version 84.NL3 of the computer program ADINA was used. Text record identifiers were inserted in Columns 72 to 80, using HISTORIAN PLUS Software Control System.

CHANGES IN TODMFE.F77

```
                                                                  Change at
                                                                  or after:

    1     IDWAS/ 0, 0, 0,18,18, 0,10,15,15,33,33, 0, 0,26,6*0/,    TODMFE93

     COMMON /SOFT/ ISCODE,WWCC,ELWW,GGFF,DDAA,IRCM                 TDFE  42

     IF (MODEL.EQ.5) READ(IIN,1005) ISCODE,WWCC,ELWW,GGFF,DDAA,IRCM TDFE 101

 1005 FORMAT (I5,4F10.0)                                           TDFE1219

     COMMON /SOFT/ ISCODE,WWCC,ELWW,GGFF,DDAA,IRCM                 MATRT214

     WRITE (6,2236) ISCODE,WWCC,ELWW,GGFF,DDAA                     MATRT244
     IF (IRCM.EQ.0) WRITE (6,2237)
     IF (IRCM.GE.1) WRITE (6,2238)

 2236 FORMAT(/38H (BB) CODE FOR TENSILE STRESS TRANSFER ,I5,       MATRT726
    1       /38H       1=LINEAR SOFTENING                 ,
    2       /38H       2=CORNELISSEN'S SOFTENING          ,
    3       /38H      SOFT BAND WIDTH (WWCC)              ,F10.5,
    4       /38H      SOFT ELEMENT WIDTH (ELWW)           ,F10.5,
    5       /38H      FRACTURE ENERGY (GGFF)              ,F10.8,
    6       /38H      MAXIMUM AGGREGATE SIZE (DDAA)       ,F10.5)
 2237 FORMAT(/41H      ONLY PERPENDICULAR CRACKS ALLOWED    )
 2238 FORMAT(/41H      ROTATING CRACK MODEL IS USED         )
```

CHANGES IN ELT2D4.F77

```
      IDW=18*ITWO                                                       ELT2D438

      DIMENSION PROP(1),WA(18,1),YZ(1),NOD5(1),NODS(1),TEMPV1(1)        ICDMOD16

      DO 10 I=1,18                                                      ICDMOD26

      COMMON /SOFT/ ISCODE,WWCC,ELWW,GGFF,DDAA,IRCM                     CDMOD 50

     1          CRKSTR(6),STRESS(4),STRAIN(4),C(4,4),NODS(1),TEMPV1(1), CDMOD 53

     2          TEMPV2(1),YZ(1),NOD5(1),WA(1),DUMWA(18)                 CDMOD 54

      DO 1 I=1,18                                                       CDMOD 66

      IF (IRCM.GE.1 .AND. ANGLE.LT.3.61D2) GO TO 13                     CDMOD135

      GO TO 14                                                          CDMOD150
   13 CONTINUE
      CALL CRAKID (STRESS,STRAIN,PGRAV,CRKSTR,RKLD,RKUN,GLD,SP33,
     1             ANGLE,EP,NUMCRK,MODEL,1)
   14 CONTINUE

   47 CALL DCRACK (C,SIG,ANGLE,MODEL,ITYP2D,NUMCRK,1,1,CRKSTR)          CDMOD270

      CALL DCRACK (C,STRESS,ANG,MODEL,ITYP2D,NUMCRK,1,2,CRKSTR)         CDMOD302

      CALL DCRACK (C,STRESS,ANGLE,MODEL,ITYP2D,NUMCRK,2,2,CRKSTR)       CDMOD350

      CALL DCRACK (C,STRESS,ANGLE,MODEL,ITYP2D,NUMCRK,1,2,CRKSTR)       CDMOD374

      CRKSTR(4)=EP(1)                                                   CDMOD415
      CRKSTR(5)=EP(2)
      CRKSTR(6)=EP(3)

      CALL DCRACK (C,STRESS,ANGLE,MODEL,ITYP2D,NUMCRK,1,2,CRKSTR)       CDMOD422

      CALL DCRACK (C,STRESS,ANGPRI,MODEL,ITYP2D,NUMCRK,1,2,CRKSTR)      CDMOD427

      CALL DCRACK (C,STRESS,ANG,MODEL,ITYP2D,NUMCRK,2,1,CRKSTR)         CDMOD590

      DO 210 I=1,18                                                     CDMOD596
      COMMON /SOFT/ ISCODE,WWCC,ELWW,GGFF,DDAA,IRCM                     CRAKID13

      DIMENSION STR(4),EPS(4),CRKSTR(6),SP1(1),SP31(1),SP32(1),SP33(1), CRAKID15

      IF (IRCM.GE.1) GO TO 11                                           CRAKID16

      GO TO 107                                                         CRAKID45
```

```
C
   11 IF (KKK.GE.2) GO TO 12
C
C     FIND DIRECTION OF  PRINCIPAL STRAINS
C
      AA=(EPS(1) + EPS(2))*0.5
      BB=(EPS(1) - EPS(2))*0.5
      CC=SQRT(BB*BB + EPS(3)*EPS(3))
      EPSL(1)=AA + CC
      EPSL(2)=AA - CC
      EPSL(3)=0.D0
      EPSL(4)=EPS(4)
      ANGLE=4.5D1
      IF (EPS(3).EQ.0.D0) ANGLE=0.1D-3
      IF (ABS(BB).LT.0.1D-6) GO TO 12
      DUM=ABS(EPS(3)/BB)
      ANGLE=57.296*ATAN(DUM)
C
      IF (BB.LT.0.D0 .AND. EPS(3).GT.0.D0) ANGLE=180. - ANGLE
      IF (BB.LT.0.D0 .AND. EPS(3).LE.0.D0) ANGLE=180. + ANGLE
      IF (BB.GT.0.D0 .AND. EPS(3).LE.0.D0) ANGLE=360. - ANGLE
      ANGLE=ANGLE/2.
C
C     FIND STRESSES PERPENDICULAR AND PARALLEL TO CRACK
C
   12 CONTINUE
      PI=4.D0*ATAN(1.D0)
      TANG=ANGLE
      IF (TANG.LT.-5.41D2) TANG=TANG + 722.
      IF (TANG .LT. (-1.8D2)) TANG=TANG + 361.
      IF (TANG.GT.1.8D2) TANG=TANG - 180.
      GAM=2.*ABS(TANG)*PI/180.
     SG=SIN(GAM) CG=COS(GAM)
     IF (KKK.EQ.3) GO TO 107
C
     R11=(STR(1) + STR(2))*0.5
     R12=(STR(1) - STR(2))*0.5
     SIGP(1)=R11 + R12*CG + STR(3)*SG
     SIGP(2)=R11 - R12*CG - STR(3)*SG
     SIGP(3)=0.D0
     SIGP(4)=STR(4)
C
     IF (KKK.EQ.2) RETURN

     COMMON /SOFT/ ISCODE,WWCC,ELWW,GGFF,DDAA,IRCM                    DCRACK 8

     DIMENSION C(4,4),SIG(4),D(4,4),T(4,4),DSIG(4),CRKSTR(6)          DCRACK 9
```

```
      IF (IRCM.EQ.0) GO TO 12                                           DCRACK59
      IF (EP(1).NE.EP(2))
     1    C(3,3) = (SIGP(1)-SIGP(2))/(2*(EP(1)-EP(2)))
      IF (EP(1).EQ.EP(2)) C(3,3) = 1.D-8
   12     CONTINUE

C     RELEASE APPROPRIATE STRESSES                                      DCRAC204
C                                                                       DCRAC205
   98 NF=NUMCRK + 1                                                     DCRAC206
      GO TO (140,120,110,155,100,100,100), NF                           DCRAC207
  100 CALL DSOF (4,SIGP,FALSTR,EP,CRKSTR,E,VNU,SIGMAT,SIGMAC)           DCRAC208
      IF (NUMCRK - 5) 140,120,110                                       DCRAC209
  110 CALL DSOF (2,SIGP,FALSTR,EP,CRKSTR,E,VNU,SIGMAT,SIGMAC)           DCRAC210
  120 SIGP(3)=SIGP(3)                                                   DCRAC211
      CALL DSOF (1,SIGP,FALSTR,EP,CRKSTR,E,VNU,SIGMAT,SIGMAC)           DCRAC212
C                                                                       DCRAC213
C     ROTATE STRESSES TO GLOBAL AXES                                    DCRAC214

      SUBROUTINE DSOF (IJ,SIGP,FALSTR,EP,CRKSTR,E,VNU,SIGMAT,SIGMAC)    CDMOD620
      IMPLICIT DOUBLE PRECISION ( A-H,O-Z )
      COMMON /SOFT/ ISCODE,WWCC,ELWW,GGFF,DDAA,IRCM
      DIMENSION SIGP(4),EP(4),CRKSTR(6),CORN(11,3)
      IF (CRKSTR(IJ).GT.0.D0) GOTO 5
      SIGP(IJ)=FALSTR
      RETURN
    5 CONTINUE
C
      DATA (CORN(I,1),I=1,11)/0.,.05,.1,.15,.2,.25,.3,.4,.6,.8,1.0/
      DATA (CORN(I,2),I=1,11)/1.,.7082,.5108,.3817,.2986,.2446,
     1                        .2080,.1596,.0904,.0361,0.0/
      JJ=IJ
      IF (JJ.EQ.4) JJ=3
      KK=JJ+3
      EEPP=EP(IJ)
      IF (EP(IJ).GT.CRKSTR(KK)) CRKSTR(KK)=EP(IJ)
      IF (EP(IJ).LT.CRKSTR(KK)) EEPP=CRKSTR(KK)
      ISS=ISCODE-2
      IF (ISS) 10,20,30
C
   10 CONTINUE
      EETT=1/(1/E-(2*GGFF)/(SIGMAT**2*WWCC))
      SIGP(IJ)=FALSTR+EETT*(EEPP-CRKSTR(JJ))
      IF (EP(IJ).LT.CRKSTR(KK)) SIGP(IJ)=EP(IJ)/EEPP*SIGP(IJ)
      IF (SIGP(IJ).GT.FALSTR) SIGP(IJ)=FALSTR
      IF (SIGP(IJ).LT.0.D0) SIGP(IJ)=0.D0
      SIGP(3)=0.D0
      RETURN
C
```

```
   20 CONTINUE
      EO=GGFF/(WWCC*0.19704*SIGMAT)
      DO 21 I=1,11
      CORN(I,3)=CORN(I,1)+CORN(I,2)*CRKSTR(JJ)/EO
      IF (EEPP/EO.LT.CORN(I,3)) GO TO 22
   21     CONTINUE
   22     AA=(CORN(I-1,2)-CORN(I,2))/(CORN(I-1,3)-CORN(I,3))
      BB=CORN(I-1,2)-AA*CORN(I-1,3)
      SIGP(IJ)=FALSTR*(AA*EEPP/EO+BB)
      IF (EP(IJ).LT.CRKSTR(KK)) SIGP(IJ)=EP(IJ)/EEPP*SIGP(IJ)
      IF (SIGP(IJ).GT.FALSTR) SIGP(IJ)=FALSTR
      IF (SIGP(IJ).LT.0.D0) SIGP(IJ)=0.D0
      SIGP(3)=0.D0
      RETURN
C
   30     CONTINUE
      RETURN
C
      END
```

Appendix B

CBM, 3-D

Three-dimensional element formulation.

CHANGES IN THREDM.F77

```
                                                                    Change at
                                                                    or after:
                                                                    ---------
     1      IDWAS / 0, 0, 0, 25,25, 0,14,21,21,47,47,38,8*0/,        THRED100

     COMMON /SOFT/ ISCODE,WWCC,ELWW,GGFF,DDAA,IRCM                   THDFE 46

     IF (MODEL.EQ.5) READ(IIN,1009) ISCODE,WWCC,ELWW,GGFF,DDAA,IRCM  THDFE102

 1009 FORMAT (I5,4F10.0)                                             THDF1190

     COMMON /SOFT/ ISCODE,WWCC,ELWW,GGFF,DDAA,IRCM                   MATWRT14

     WRITE (6,2239)                                                  MATWR243

 2239 FORMAT(/38H (BB) CODE FOR TENSILE STRESS TRANSFER,I5,          MATWR596
     1       /38H        1=LINEAR SOFTENING              ,
     2       /38H        2=CORNELISSEN'S SOFTENING       ,
     3       /38H       SOFT BAND WIDTH (WWCC)           ,F10.5,
     4       /38H       SOFT ELEMENT WIDTH (ELWW)        ,F10.5,
     5       /38H       FRACTURE ENERGY (GGFF)           ,F10.8,
     6       /38H       MAXIMUM AGGREGATE SIZE (DDAA)    ,F10.5)
```

CHANGES IN ELT3D4.F77

```
     IDW=25*ITWO                                                     ELT3D444

     DIMENSION PROP(1),WA(25,1),XYZ(1),NOD9(1),NODS(1),TEMPV1(1)     ICMOD316

     DO 10 I=1,25                                                    ICMOD326

     1          CRKSTR(6),STRESS(6),STRAIN(6),C(6,6),RLMN(3,3),NODS(1), CMOD3D54

     1          TEMPV1(1),TEMPV2(1),XYZ(1),NOD9(1),WA(1),DUMWA(25)   CMOD3D55
```

```
      DO 1 I=1,25                                                       CMOD3D67

   47 CALL DCRAK3 (C,SIG,RLMN,MODEL,NUMCRK,1,1,CRKSTR)                  CMOD3261

      CALL DCRAK3 (C,STRESS,RLMN,MODEL,NUMCRK,1,2,CRKSTR)               CMOD3286

      CALL DCRAK3 (C,STRESS,RLMN,MODEL,NUMCRK,2,2,CRKSTR)               CMOD3340

      CRKSTR(4)=EP(1)                                                   CMOD3362
      CRKSTR(5)=EP(2)
      CRKSTR(6)=EP(3)

      CALL DCRAK3 (C,STRESS,RLMN,MODEL,NUMCRK,1,2,CRKSTR)               CMOD3363

  159 CALL DCRAK3 (C,STRESS,RLMN,MODEL,NUMCRK,1,2,CRKSTR)               CMOD3414

      CALL DCRAK3 (C,STRESS,RLMN,MODEL,NUMCRK,1,2,CRKSTR)               CMOD3420

  130 CALL DCRAK3 (C,SIG,RLMN,MODEL,NUMCRK,2,1,CRKSTR)                  CMOD3561

      DO 210 I=1,25                                                     CMOD3567

      DIMENSION STR(4),EPS(4),CRKSTR(6),SP1(1),SP31(1),SP32(1),SP33(1), CRAKID15

      DIMENSION C(4,4),SIG(4),D(4,4),T(4,4),DSIG(4),CRKSTR(6)           DCRACK 9

C     RELEASE APPROPRIATE STRESSES                                      DCRAK165
C                                                                       DCRAK166
      NF=IK + 1                                                         DCRAK167
      GO TO (140,120,110,100,155), NF                                   DCRAK168
  100 CALL DSOF3 (3,SIGP,FALSTR,EP,CRKSTR,E,VNU,SIGMAT,SIGMAC)          DCRAK169
  110 SIGP(6)=SIGP(6)                                                   DCRAK170
      CALL DSOF3 (2,SIGP,FALSTR,EP,CRKSTR,E,VNU,SIGMAT,SIGMAC)          DCRAK171
  120 SIGP(5)=SIGP(5)                                                   DCRAK172
      SIGP(4)=SIGP(4)                                                   DCRAK173
      CALL DSOF3 (1,SIGP,FALSTR,EP,CRKSTR,E,VNU,SIGMAT,SIGMAC)          DCRAK174
C                                                                       DCRAK175
C     ROTATE STRESSES TO GLOBAL AXES                                    DCRAK176

      SUBROUTINE DSOF3 (IJ,SIGP,FALSTR,EP,CRKSTR,E,VNU,SIGMAT,SIGMAC)   CMOD3590
      IMPLICIT DOUBLE PRECISION ( A-H,O-Z )
      COMMON /SOFT/ ISCODE,WWCC,ELWW,GGFF,DDAA,IRCM
      DIMENSION SIGP(4),EP(4),CRKSTR(6),CORN(11,3)
C
      IF (CRKSTR(IJ).GT.0.D0) GOTO 5
      SIGP(IJ)=FALSTR
      RETURN
```

```
    5 CONTINUE
      DATA (CORN(I,1),I=1,11)/0.,.05,.1,.15,.2,.25,.3,.4,.6,.8,1.0/
      DATA (CORN(I,2),I=1,11)/1.,.7082,.5108,.3817,.2986,.2446,.2080,
     1                        .1596,.0904,.0361,0.0/
      JJ=IJ
      KK=JJ+3
      EEPP=EP(IJ)
      IF (EP(IJ).GT.CRKSTR(KK)) CRKSTR(KK)=EP(IJ)
      IF (EP(IJ).LT.CRKSTR(KK)) EEPP=CRKSTR(KK)
C
      ISS=ISCODE-2
      IF (ISS) 10,20,30
C
   10 CONTINUE
      EETT=1/(1/E-(2*GGFF)/(SIGMAT**2*WWCC))
      SIGP(IJ)=FALSTR+EETT*(EEPP-CRKSTR(JJ))
      IF (EP(IJ).LT.CRKSTR(KK)) SIGP(IJ)=EP(IJ)/EEPP*SIGP(IJ)
      IF (SIGP(IJ).GT.FALSTR) SIGP(IJ)=FALSTR
      IF (SIGP(IJ).LT.0.D0) SIGP(IJ)=0.D0
      IF (IJ-2) 12,11,11
   11 SIGP(6)=0.D0
   12 SIGP(5)=0.D0
      SIGP(4)=0.D0
      RETURN
C
   20 CONTINUE
      EO=GGFF/(WWCC*0.19704*SIGMAT)
      DO 23 I=1,11
      CORN(I,3)=CORN(I,1)+CORN(I,2)*CRKSTR(JJ)/EO
      IF (EEPP/EO.LT.CORN(I,3)) GO TO 24
   23 CONTINUE
   24 AA=(CORN(I-1,2)-CORN(I,2))/(CORN(I-1,3)-CORN(I,3))
      BB=CORN(I-1,2)-AA*CORN(I-1,3)
      SIGP(IJ)=FALSTR*(AA*EEPP/EO+BB)
      IF (SIGP(IJ).GT.FALSTR) SIGP(IJ)=FALSTR
      IF (SIGP(IJ).LT.0.D0) SIGP(IJ)=0.D0
      IF (IJ-2) 22,21,21
   21 SIGP(6)=0.D0
   22 SIGP(5)=0.D0
       SIGP(4)=0.D0
       RETURN
C
   30     CONTINUE
      RETURN
C
      END
```

Appendix C

GENERAL MODIFICATIONS

The following are changes implemented in the rest of the program, namely in the subprograms ADINA.F77, ADINI.F77 and ADINA2.F77. Only the modified spherical constant arc-length scheme is allowed and only Full Newton iterations without line search are carried out. If NODQL is chosen between 3 and 100, a subset of NODQL nodes is used in the norm of displacement. If NODQL is 2, the distance between two points is used instead of the norm of displacement.

CHANGES IN ADINA.F77

```
      COMMON /DICS/ DISPM4,ADNOM,ADMAX,ADCOM,NODQ,NDID,NEDPM4,N1CRLO,IARADINA189
     1              ,NODQL,NEDPML(100,7)

      IF (IRSM4.EQ.2) KSTOP=1                                           ADINA994
```

CHANGES IN ADINI.F77

```
     1              ,NODQL,NEDPML(100,7)                                ADINI 33

     1READ (IIN,1004) NODQ,NDID,DISPM4,ADNOM,ADMAX,ICOMA,IAR,NODQL      ADINI166
      IF(NODQL.EQ.0 .OR. METHOD.NE.4) GO TO 70
      NNODQL=INT(FLOAT(NODQL-1)/10.)+1
      DO 69 I=1,NNODQL
   69 READ (IIN,1007) (NEDPML(10*(I-1)+K,1),K=1,10)
   70 CONTINUE
      IF (METHOD.EQ.4) NEWREF=1                                         ADINI718
      IF (NODQL.EQ.0) GO TO 46                                          ADINI801
      WRITE (6,2067) NODQL
      DO 446 I=1,NNODQL
  446 WRITE (6,2068) (NEDPML(10*(I-1)+K,1),K-1,10)

 1004 FORMAT (2I5,3F10.0,3I5)                                           ADIN1218

 1007 FORMAT (10I5)                                                     ADIN1220

 2067 FORMAT (/5X,                                                      ADIN1577
     155HNODE SUBSET FOR DISPLACEMENT NORM, TOTAL NODES (NODQL)=,I5,/)
 2068 FORMAT (15X,10I4)
```

CHANGES IN ADINA2.F77

```
     1              ,NODQL,NEDPML(100,7)                                LOADMS55

      IF (NODQL.EQ.0) GO TO 13                                         LOADM103
      DO 13 II=1,NODQL
      NIDL=N5 - 1 + ((NEDPML(II,1)-1)*NDOF
      DO 22 IN=1,6
      IF (IDOF(IN).EQ.0) GO TO 22
      NIDL=NIDL+1
      NEDPML(II,IN+1) = IA(NIDL)
   22 CONTINUE
   13 CONTINUE
      IF(NODQL.EQ.0) GO TO 14                                          LOADM109
      WRITE (6,5000)
      DO 15 I=1,NODQL
   15 WRITE (6,5001) NEDPML(I,1),(NEDPML(I,K),K=2,7)
   14 CONTINUE

 5000 FORMAT(/34H NODE SUBSET FOR DISPLACEMENT NORM,                   LOADM268
     1       /34H      NODE   EQUATION NUMBERS      )
 5001 FORMAT(6X,I4,4X,6I4)

C     IF (PEOLD.GT.BIG*PEINIT) GO TO 210                               EQUIT254

      GO TO 230                                                        EQUIT259

     1              ,NODQL,NEDPML(100,7)                                ASTIM423


     1              ,NODQL,NEDPML(100,7)                                ASTCHE71

      DUALL=3.*DUALL                                                   ASTCH151

      IF (NODQL.NE.0) GO TO 500                                        ASTCH186

      COMMON /DICS/ DISPM4,ADNOM,ADMAX,ADCOM,NODQ,NDID,NEDPM4,N1CRLO,IARDOPRFM14
     1              ,NODQL,NEDPML(100,7)

      IF (NODQL.EQ.2) GO TO 160                                        DOPRFM21
      IF (NODQL.NE.0) GO TO 150

  150 PD=0.D0                                                          DOPRFM46
      DO 151 I=1,NODQL
      DO 151 J=2,7
      IF (NEDPML(I,J).EQ.0) GO TO 151
      PD=PD+AA(NEDPML(I,J))*BB(NEDPML(I,J))
  151 CONTINUE
      PD=PD*(NALLEQ/(NODQL+1))
      PR=0.D0
      RETURN
```

```
160 PD=0.D0
    DO 161 J=2,7
    IF (NEDPML(1,J).EQ.0) GO TO 161
    PD=PD+(AA(NEDPML(1,J))-AA(NEDPML(2,J)))
   1      *(BB(NEDPML(1,J))-BB(NEDPML(2,J)))
161 CONTINUE
    PD=PD*(NALLEQ/3)
    PR=0.D0
    RETURN

   1               ,NODQL,NEDPML(100,7)                                ALSTEP 9

   1               ,NODQL,NEDPML(100,7)                                ALSET 10

    NODQL=0                                                            ALSET 37

    DO 2 I=1,100                                                       ALSET 39
    DO 2 J=1,7
  2 NEDPML(I,J)=0

   1               ,NODQL,NEDPML(100,7)                                NEWDAV36
```

Appendix D

FAILURE ENVELOPE

Concrete Strength	Power
8000 psi (563 kp/cm^2) (55.2 MPa)	1.00
6000 psi (422 kp/cm^2) (41.4 MPa)	1.40
4000 psi (281 kp/cm^2) (27.6 MPa)	1.80
2000 psi (141 kp/cm^2) (27.6 MPa)	2.20

CHANGES IN ELT2D4.F77

```
      FALSTR=SIGMAT*(1. - (P3/SIGMAC)**POWR)                          PRNCPL86

      IF (P1.GE.0.D0) FALSTR=SIGMAT*(1. - (P2/SIGCP)**POWR)           PRNCP121
     1                            *(1. - (P3/SIGCP)**POWR)

      IF (MODEL.EQ.5 .AND. SIG(2).LT.0.D0)                            CRAKI183
     1 FALSTR=SIGMAT*(1. - (SIG(2)/SIGMAC)**POWR)                     CRAKI184
```

CHANGES IN ELT3D4.F77

```
  120 FALSTR=SIGMAT*(1. - (P3/SIGMAC)**POWR)                          PRNCP232

      IF (P1.GE.0.D0) FALSTR=SIGMAT*(1. - (P2/SIGCP)**POWR)           PRNCP266
     1                            *(1. - (P3/SIGCP)**POWR)

      IF (MODEL.EQ.5 .AND. SIG(3).LT.0.D0)                            CRAK3120
     1 FALSTR=SIGMAT*(1. - (SIG(3)/SIGMAC)**POWR)                     CRAK3121
```

Appendix E

DERIVATION OF CRACK STIFFNESS MATRIX B

The MRCM formulation can be rewritten as

$$\sigma_{nn} = -a_{12} r \sqrt{\delta_n} \sigma_{nt}/h$$

$$\sigma_{nt} = \tau_o(1-\sqrt{2\delta_n/d_a})r(f/g)$$

where:

$$f = a_3 + a_4 \, |r^3|$$

$$g = 1 + a_4 \, r^4$$

$$h = (1+r^2)^{0.25}$$

and by derivation:

$$f_n = \partial f/\partial n = -3a_4|\delta_t{}^3/\delta_n{}^4|$$

$$f_t = \partial f/\partial t = 3a_4\delta_t|\delta_t/\delta_n{}^3|$$

$$g_n = \partial g/\partial n = -4a_4(\delta_t{}^4/\delta_n{}^5)$$

$$g_t = \partial g/\partial t = 4a_4(\delta_t{}^3/\delta_n{}^4)$$

$$h_n = \partial h/\partial n = (1+r^2)^{-0.75}(-2\delta_t{}^2/\delta_n{}^3)/4$$

$$h_t = \partial h/\partial t = (1+r^2)^{-0.75}(2\delta_t/\delta_n{}^2)$$

The crack stiffness terms are then:

$$B_{nn} = -a_{12}\left((-h\delta_t/\delta_n^{\,2}-h_n r)\sqrt{\delta_n}\sigma_{nt}/h^2 + r\delta_n^{\,-0.5}\sigma_{nt}/2h\ r\sqrt{\delta_n}B_{tn}/h\right)$$

$$B_{nt} = -a_{12}\left((-h_t r+h/\delta_n)\sqrt{\delta_n}\sigma_{nt}/h^2 + r\sqrt{\delta_n}B_{tt}/h\right)$$

$$B_{tt} = \tau_o(1-\sqrt{2\delta_n/d_a})\ \left[f/\delta_n g + r(f_t g-fg_t)/g^2\right]$$

$$B_{tn} = \tau_o\left(-fr/(g\sqrt{2d_a\delta_n})+(1-\sqrt{2\delta_n/d_a})\left[(f_n g-fg_n)r/g^2-f\delta_t/(g\delta_n^{\,2})\right]\right)$$

DISTRIBUTION LIST

AF HQ ESD/AVMS, Hanscom AFB, MA
AFESC TIC (library), Tyndall AFB, FL
ARMY CECOM R&D Tech Lib, Ft Monmouth, NJ; R&D Lab, STRNC-UE, Natick, MA
ARMY BELVOIR R&D CEN STRBE-BLORE, Ft Belvoir, VA
ARMY CERL CECER-EMF (Hayes), Champaign, IL; Library, Champaign, IL
ARMY EWES GP-EC (Webster), Vicsburg, MS; Library, Vicksburg MS; WESCD-P (Melby), Vicksburg, MS; WESCV-Z (Whalin), Vicksburg, MS; WESGP-E, Vicksburg, MS
ARMY MMRC DRXMR-SM (Lenoe), Watertown, MA
CNA Tech Library, Alexandria, VA
DOD Explos Safety Brd (Lib), Washington, DC
DTRCEN Code 172, Bethesda, MD; Code 4111, Bethesda, MD
GIDEP OIC, Corona, CA
GSA Ch Engrg Br, PQB, Washington, DC
LIBRARY OF CONGRESS Sci & Tech Div, Washington, DC
NAVCOASTSYSCEN CO, Panama City, FL
NAVFAC N62, Argentia, NF
NAVFACENGCOM Code 00, Alexandria, VA; Code 03, Alexandria, VA; Code 04A, Alexandria, VA; Code 04A1, Alexandria, VA; Code 04A1D, Alexandria, VA; Code 04A2, Alexandria, VA; Code 04A3C, Alexandria, VA; Code 0631, Alexandria, VA; Code 07, Alexandria, VA; Code 07M (Gross), Alexandria, VA; Code 09M124 (Lib), Alexandria, VA
NAVFACENGCOM - CHES DIV, Code 112.1, Washington, DC; FPO-1PL, Washington, DC
NAVFACENGCOM - LANT DIV, Code 1112, Norfolk, VA; Library, Norfolk, VA
NAVFACENGCOM - NORTH DIV, Code 04, Philadelphia, PA; Code 04AL, Philadelphia, PA
NAVFACENGCOM - SOUTH DIV, Code 04A3, Charleston, SC; Code 102H, Charleston, SC; Code 406, Charleston, SC; Library, Charleston, SC
NAVFACENGCOM - WEST DIV, Code 04A2.2 (Lib), San Bruno, CA; Code 04B, San Bruno, CA; Code 408.2 (Jeung) San Bruno, CA; Pac NW Br Offc, Code C50, Silverdale, WA
NAVFACENGCOM CONTRACTS Code 460, Portsmouth, VA; Earle, ROICC, Colts Neck, NJ
NAVHOSP SCE (Knapowski), Great Lakes, IL
NAVMARCORESCEN LTJG Davis, Raleigh, NC
NAVMEDCOM SCE, Jacksonville, FL
NAVSCSCOL PWO, Athens, GA
NRL Code 2511, Washington, DC; Code 4670 (B. Faraday), Washington, DC
NUSC DET Lib (Code 4533), Newport, RI
CALIFORNIA STATE UNIVERSITY C.V. Chelapati, Long Beach, CA
CASE WESTERN RESERVE UNIV CE Dept (Perdikaris), Cleveland, OH
CATHOLIC UNIV of Am. CE Dept (Kim), Washington, DC
CLARKSON COLL OF TECH CE Dept (Batson), Potsdam, NY
COLORADO STATE UNIVERSITY CE Dept (Criswell), Ft Collins, CO
CORNELL UNIVERSITY Civil & Environ Engrg (Dr. Kulhawy), Ithaca, NY; Library, Ithaca, NY
DAMES & MOORE Library, Los Angeles, CA
FLORIDA INST OF TECH CE Dept (Kalajian), Melbourne, FL
GEORGIA INSTITUTE OF TECHNOLOGY CE Scol (Kahn), Atlanta, GA; CE Scol (Swanger), Atlanta, GA; CE Scol (Zuruck), Atlanta, GA
JOHNS HOPKINS UNIV CE Dept (Jones), Baltimore, MD
LAWRENCE LIVERMORE NATL LAB EJ Tokarz, Livermore, CA; Plant Engrg Lib (L-654), Livermore, CA
LEHIGH UNIVERSITY Linderman Library, Bethlehem, PA
MICHIGAN TECH UNIVERSITY CE Dept (Haas), Houghton, MI
MIT Engrg Lib, Cambridge, MA
NATL ACADEMY OF SCIENCES NRC, Naval Studies Bd, Washington, DC
OREGON STATE UNIVERSITY CE Dept (Hicks), Corvallis, OR
PENNSYLVANIA STATE UNIVERSITY Gotolski, University Park, PA; Rsch Lab (Snyder), State College, PA
PORTLAND STATE UNIVERSITY Engrg Dept (Miglioro), Portland, OR
PURDUE UNIVERSITY CE Scol (Leonards), W. Lafayette, IN; Engrg Lib, W. Lafayette, IN
SAN DIEGO STATE UNIV CE Dept (Krishnamoorthy), San Diego, CA
SEATTLE UNIVERSITY CE Dept (Schwaegler), Seattle, WA
SOUTHWEST RSCH INST King, San Antonio, TX; M. Polcyn, San Antonio, TX; Marchand, San Antonio, TX
STATE UNIVERSITY OF NEW YORK CE Dept (Reinhorn), Buffalo, NY; CE Dept, Buffalo, NY
TEXAS A&M UNIVERSITY CE Dept (Machemehl), College Station, TX; CE Dept (Niedzwecki), College Station, TX; Ocean Engr Proj, College Station, TX

UNIVERSITY OF CALIFORNIA CE Dept (Fenves), Berkeley, CA; CE Dept (Fourney), Los Angeles, CA; CE Dept (Gerwick), Berkeley, CA; CE Dept (Taylor), Davis, CA; CE Dept (Williamson), Berkeley, CA
UNIVERSITY OF HARTFORD CE Dept (Keshawarz), West Hartford, CT
UNIVERSITY OF HAWAII CE Dept (Chiu), Honolulu, HI; Manoa, Library, Honolulu, HI
UNIVERSITY OF ILLINOIS Library, Urbana, IL; Metz Ref Rm, Urbana, IL
UNIVERSITY OF MICHIGAN CE Dept (Richart), Ann Arbor, MI
UNIVERSITY OF NEW MEXICO HL Schreyer, Albuquerque, NM; NMERI (Bean), Albuquerque, NM; NMERI (Falk), Albuquerque, NM; NMERI (Leigh), Albuquerque, NM
UNIVERSITY OF PENNSYLVANIA Dept of Arch (P. McCleary), Philadelphia, PA
UNIVERSITY OF RHODE ISLAND CE Dept (Kovacs), Kingston, RI; CE Dept, Kingston, RI
UNIVERSITY OF TEXAS CE Dept (Thompson), Austin, TX; Construction Industry Inst, Austin, TX; ECJ 4.8 (Breen), Austin, TX
UNIVERSITY OF WASHINGTON CE Dept (Mattock), Seattle, WA
UNIVERSITY OF WISCONSIN Great Lakes Studies Cen, Milwaukee, WI
WASHINGTON DHHS, OFE/PHS (Ishihara), Seattle, WA
AMERICAN CONCRETE INSTITUTE Library, Detroit, MI
ARVID GRANT & ASSOC Olympia, WA
BECHTEL CIVIL, INC Woolston, San Francisco, CA
CANADA Viateur De Champlain, D.S.A., Matane, Quebec
CHILDS ENGRG CORP K.M. Childs, Jr, Medfield, MA
CLARENCE R JONES, CONSULTN, LTD Augusta, GA
COLLINS ENGRG, INC M Garlich, Chicago, IL
CONRAD ASSOC Luisoni, Van Nuys, CA
CONSOER TOWNSEND & ASSOC Schramm, Chicago, IL
CONSTRUCTION TECH LABS, INC G. Corley, Skokie, IL
DILLINGHAM CONSTR CORP (HD&C), F McHale, Honolulu, HI
I Ong Yam Chai, Singapore
EARL & WRIGHT CONSULTING ENGRGS Jensen, San Francisco, CA
EVALUATION ASSOC, INC MA Fedele, King of Prussia, PA
HALEY & ALDRICH, INC, T.C. Dunn, Cambridge, MA
HAYNES & ASSOC H. Haynes, PE, Oakland, CA
HIRSCH & CO L Hirsch, San Diego, CA
HJ DEGENKOLB ASSOC W Murdough, San Francisco, CA
JOHN J MC MULLEN ASSOC Library, New York, NY
LEO A DALY CO Honolulu, HI
LIN OFFSHORE ENGRG P. Chow, San Francisco CA
LINDA HALL LIBRARY Doc Dept, Kansas City, MO
MARITECH ENGRG Donoghue, Austin, TX
MC CLELLAND ENGRS, INC Library, Houston, TX
EDWARD K NODA & ASSOC Honolulu, HI
NEW ZEALAND NZ Concrete Rsch Assoc, Library, Porirua
PACIFIC MARINE TECH (M. Wagner) Duvall, WA
PMB ENGRG Coull, San Francisco, CA
PORTLAND CEMENT ASSOC AE Fiorato, Skokie, IL
SANDIA LABS Library, Livermore, CA
SARGENT & HERKES, INC JP Pierce, Jr, New Orleans, LA
SAUDI ARABIA King Saud Univ, Rsch Cen, Riyadh
SIMPSON, GUMPERTZ & HEGER, INC E Hill, CE, Arlington, MA
TRW INC Crawford, Redondo Beach, CA; Dai, San Bernardino, CA; Engr Library, Cleveland, OH
TUDOR ENGRG CO Ellegood, Phoenix, AZ
WISS, JANNEY, ELSTNER, & ASSOC DW Pfeifer, Northbrook, IL
WISWELL, INC G.C. Wiswell, Southport, SC
WOODWARD-CLYDE CONSULTANTS West Reg. Lib, Oakland, CA
BROWN, ROBERT University, AL
GIORDANO, A.J. Sewell, NJ
HAYNES, B. No. Stonington, CT
HEUZE, F Alamo, CA
NIEDORODA, AW Gainesville, FL
QUIRK, J Panama City, FL
STEVENS, TW Dayton, OH
VAN ALLEN, B Kingston, NY

INSTRUCTIONS

The Naval Civil Engineering Laboratory has revised its primary distribution lists. The bottom of the label on the reverse side has several numbers listed. These numbers correspond to numbers assigned to the list of Subject Categories. Numbers on the label corresponding to those on the list indicate the subject category and type of documents you are presently receiving. If you are satisfied, throw this card away (or file it for later reference).

If you want to change what you are presently receiving:

- Delete - mark off number on bottom of label.
- Add - circle number on list.
- Remove my name from all your lists - check box on list.
- Change my address - line out incorrect line and write in correction **(DO NOT REMOVE LABEL)**.
- Number of copies should be entered after the title of the subject categories you select.

Fold on line below and drop in the mail.

Note: Numbers on label but not listed on questionnaire are for NCEL use only. please ignore them.

Fold on line and staple.

DEPARTMENT OF THE NAVY

Naval Civil Engineering Laboratory
Port Hueneme, CA 93043-5003

Official Business
Penalty for Private Use, $300

NO POSTAGE NECESSARY IF MAILED IN THE UNITED STATES

BUSINESS REPLY CARD

FIRST CLASS PERMIT NO. 12503 WASH D.C.

POSTAGE WILL BE PAID BY ADDRESSEE

Commanding Officer
Code L34
Naval Civil Engineering Laboratory
Port Hueneme, California 93043-5003

DISTRIBUTION QUESTIONNAIRE

The Naval Civil Engineering Laboratory is revising its Primary distribution lists.

SUBJECT CATEGORIES

1 SHORE FACILITIES
2 Construction methods and materials (including corrosion control, coatings)
3 Waterfront structures (maintenance/deterioration control)
4 Utilities (including power conditioning)
5 Explosives safety
6 Aviation Engineering Test Facilities
7 Fire prevention and control
8 Antenna technology
9 Structural analysis and design (including numerical and computer techniques)
10 Protective construction (including hardened shelters, shock and vibration studies)
11 Soil/rock mechanics
14 Airfields and pavements

15 ADVANCED BASE AND AMPHIBIOUS FACILITIES
16 Base facilities (including shelters, power generation, water supplies)
17 Expedient roads/airfields/bridges
18 Amphibious operations (including breakwaters, wave forces)
19 Over-the-Beach operations (including containerization, material transfer, lighterage and cranes)
20 POL storage, transfer and distribution

28 ENERGY/POWER GENERATION
29 Thermal conservation (thermal engineering of buildings, HVAC systems, energy loss measurement, power generation)
30 Controls and electrical conservation (electrical systems, energy monitoring and control systems)
31 Fuel flexibility (liquid fuels, coal utilization, energy from solid waste)
32 Alternate energy source (geothermal power, photovoltaic power systems, solar systems, wind systems, energy storage systems)
33 Site data and systems integration (energy resource data, energy consumption data, integrating energy systems)
34 ENVIRONMENTAL PROTECTION
35 Hazardous waste minimization
36 Restoration of installations (hazardous waste)
37 Waste water management and sanitary engineering
38 Oil pollution removal and recovery
39 Air pollution

44 OCEAN ENGINEERING
45 Seafloor soils and foundations
46 Seafloor construction systems and operations (including diver and manipulator tools)
47 Undersea structures and materials
48 Anchors and moorings
49 Undersea power systems, electromechanical cables, and connectors
50 Pressure vessel facilities
51 Physical environment (including site surveying)
52 Ocean-based concrete structures
54 Undersea cable dynamics

TYPES OF DOCUMENTS

85 Techdata Sheets
86 Technical Reports and Technical Notes
83 Table of Contents & Index to TDS
82 NCEL Guides & Abstracts
91 Physical Security

☐ None-remove my name

NCEL DOCUMENT EVALUATION

You are number one with us; how do we rate with you?

We at NCEL want to provide you our customer the best possible reports but we need your help. Therefore, I ask you to please take the time from your busy schedule to fill out this questionnaire. Your response will assist us in providing the best reports possible for our users. I wish to thank you in advance for your assistance. I assure you that the information you provide will help us to be more responsive to your future needs.

R. N. STORER, Ph.D, P.E.
Technical Director

DOCUMENT NO. _____ TITLE OF DOCUMENT: _____

Date: _____ Respondent Organization : _____

Name: _____ Activity Code: _____
Phone: _____ Grade/Rank: _____

Category (*please check*):

Sponsor ____ User ____ Proponent ____ Other (*Specify*) _____

Please answer on your behalf only; not on your organization's. Please check (*use an X*) only the block that most closely describes your attitude or feeling toward that statement:

SA Strongly Agree A Agree O Neutral D Disagree SD Strongly Disagree

---

	SA	A	N	D	SD
1. The technical quality of the report is comparable to most of my other sources of technical information.	( )	( )	( )	( )	( )
2. The report will make significant improvements in the cost and or performance of my operation.	( )	( )	( )	( )	( )
3. The report acknowledges related work accomplished by others.	( )	( )	( )	( )	( )
4. The report is well formatted.	( )	( )	( )	( )	( )
5. The report is clearly written.	( )	( )	( )	( )	( )
6. The conclusions and recommendations are clear and directly supported by the contents of the report.	( )	( )	( )	( )	( )
7. The graphics, tables, and photographs are well done.	( )	( )	( )	( )	( )

Do you wish to continue getting NCEL reports? ☐ YES ☐ NO

Please add any comments (e.g., in what ways can we improve the quality of our reports?) on the back of this form.

Comments:

Please fold on line and staple

DEPARTMENT OF THE NAVY

Naval Civil Engineering Laboratory
Port Hueneme, CA 93043-5003

Official Business
Penalty for Private Use $300

Code L03B
NAVAL CIVIL ENGINEERING LABORATORY
PORT HUENEME, CA 93043-5003