DTIC FILE COPY

AD-A216 412

VALIDATION OF THE BOUNDARY ELEMENT METHOD APPLIED TO COMPLEX FRACTURE MECHANICS CONDITIONS

THESIS

Ralph E. Urch
Captain, USAF

AFIT/GAE/ENY/89D-39

DTIC
ELECTE
JAN 0 3 1990
S D
D

DISTRIBUTION STATEMENT A
Approved for public release;
Distribution Unlimited

DEPARTMENT OF THE AIR FORCE
AIR UNIVERSITY
AIR FORCE INSTITUTE OF TECHNOLOGY

Wright-Patterson Air Force Base, Ohio

90 01 02 097

AFIT/GAE/ENY/89D-39

1

DTIC
ELECTE
JAN 0 3 1990
S D
D

VALIDATION OF THE BOUNDARY ELEMENT METHOD APPLIED TO COMPLEX FRACTURE MECHANICS CONDITIONS

THESIS

Ralph E. Urch
Captain, USAF

AFIT/GAE/ENY/89D-39

Approved for public release; distribution unlimited

AFIT/GAE/ENY/89D-39

VALIDATION OF THE BOUNDARY ELEMENT METHOD APPLIED TO COMPLEX FRACTURE MECHANICS CONDITIONS

THESIS

Presented to the Faculty of the School of Engineering

of the Air Force Institute of Technology

Air University

In Partial Fulfillment of the

Requirements for the Degree of

Master of Science in Aeronautical Engineering

COPY INSPECTED

Accesion For	
NTIS CRA&I	☑
DTIC TAB	☐
Unannounced	☐
Justification	
By	
Distribution /	
Availability Codes	
Dist	Avail and / or Special
A-1	

Ralph E. Urch, B.S.

Captain, USAF

December 1989

Approved for public release; distribution unlimited

Preface

The purpose of this study was to develop a computer code which would validate the use of the Boundary Element Method (BEM) in problems of fracture mechanics. Specifically, I used the Displacement Discontinuity Method (developed by Stephen L. Crouch) to solve several fracture configurations.

Originally, I modified the code only slightly in order to solve problems involving isotropic materials. Having obtained results for those cases, I then modified the code even further to include specially orthotropic materials (such as 0° and 90° composite laminates).

For introducing me to the concepts of the BEM, and especially for his patience and understanding during these past several months, I thank my faculty advisor, Dr. Anthony Palazotto. For coming up with the displacement discontinuity solution for an orthotropic material, I give credit to divine intervention. Perhaps most importantly, for helping to break the tension which seemed to build to new levels each week, I am grateful for the presence of all the regular participants in "Friday at the FlyWright."

Ralph E. Urch

Table of Contents

	Page
Preface	ii
List of Figures	v
List of Tables	vii
List of Symbols	viii
Abstract	x
I. Introduction	1-1
II. Theoretical Discussion	2-1
The Method	2-2
Computer Implementation	2-14
Stress Intensity Factors	2-18
Modeling Considerations	2-23
III. Isotropic Materials	3-1
Theoretical Development	3-1
Stress Analysis Application	3-5
Fracture Mechanics Applications	3-6
Offset Parallel Cracks	3-6
Slanted Embedded Crack (45° Angle)	3-9
Single Edge Crack Near a Hole	3-11
IV. Orthotropic Materials	4-1
Theoretical Development	4-1
Stress Analysis Application	4-14
Fracture Mechanics Applications	4-17
Symmetric Edge Cracks Emanating from a Hole	4-17
Slanted Embedded Crack (45° Angle)	4-19
Single Edge Crack Near a Hole	4-21
V. Conclusions and Recommendations	5-1
Conclusions	5-1
Recommendations	5-2
Appendix A: Orthotropic Solution	A-1

Page

Appendix B: Proofs B-1

Theorem 1: $q_1 q_2 = 1$ B-1

Theorem 2: $[\bar{x} \pm a + \frac{1}{2} - B\ \bar{y}/A_i^2] + [\bar{y}/(\gamma_i A_i^2)] =$

$[A_i(\bar{x} \pm a)^2 + L_i(\bar{x} \pm a)\bar{y} + C_i\bar{y}^2]/A_i$ B-4

Appendix C: FORTRAN Program TWODD C-1

Appendix D: FORTRAN Program TWODDO D-1

Bibliography BIB-1

Vita VIT-1

List of Figures

		Page
1.1.	Numerical Methods of Structural Analysis	1-2
2.1.	Line Crack in an Infinite Plate	2-3
2.2.	Coordinate Systems for a Single Element	2-4
2.3.	Series of N Line Cracks Joined End-to-End	2-6
2.4.	Defining the Boundary of a Problem	2-11
2.5.	Line of Symmetry	2-15
2.6.	Fracture Mechanics Modes	2-19
2.7.	Coordinates for the Near-Field Solution	2-20
2.8.	Typical Curve Generated from Application of the DDM	2-21
2.9.	Modeling a Half-Crack Using DDM Elements	2-24
3.1.	Displacement Discontinuity along a Line Crack	3-1
3.2.	Circular Hole in an Infinite Plate under Uniaxial Tension (Isotropic)	3-2
3.3.	Stress Distribution for a Circular Hole in an Infinite Plate under Uniaxial Tension (Isotropic)	3-7
3.4.	Offset Parallel Cracks in an Infinite Plate (Isotropic)	3-8
3.5.	Slanted Embedded Crack (Isotropic)	3-10
3.6.	Single Edge Crack Near a Hole (Isotropic)	3-12
4.1.	Constant Traction Applied to a Line Crack	4-2
4.2.	Circular Hole in an Infinite Plate under Uniaxial Tension (Orthotropic)	4-15
4.3.	Symmetric Edge Cracks Emanating from a Hole (Orthotropic)	4-18

Page

4.4. Slanted Embedded Crack (Orthotropic) 4-20

4.5. Single Edge Crack Near a Hole (Orthotropic) 4-22

List of Tables

		Page
3.1.	Offset Parallel Cracks (Isotropic)	3-9
3.2.	Slanted Embedded Crack (Isotropic)	3-11
3.3.	Single Edge Crack Near a Hole (Isotropic)	3-13
4.1.	Tangential Stress at Edge of a Circular Hole (Orthotropic)	4-16
4.2.	Symmetric Edge Cracks Emanating from a Hole (Orthotropic)	4-19
4.3.	Slanted Embedded Crack (Orthotropic)	4-21
4.4.	Single Edge Crack Near a Hole (Orthotropic)	4-23

List of Symbols

$[\ ]_{,x}$	partial derivative with respect to x of the parameter [ ]: $\frac{\partial}{\partial x}[\ ]$
${}^{i}[\ ]$	value of parameter [ ] evaluated at the center of the ith element
${}^{ij}A_{ns}$	influence coefficient relating stress in the n-direction at the center of the ith element due to a displacement discontinuity in the s-direction at the jth element
${}^{ij}B_{sn}$	influence coefficient relating displacement in the s-direction at the center of the ith element due to a displacement discontinuity in the n-direction at the jth element
D_n	displacement discontinuity in the n-direction
E	Young's modulus for an isotropic material
E_1	Young's modulus in the principal direction for an orthotropic material
E_2	Young's modulus in the secondary direction for an orthotropic material
G	shear modulus for an isotropic material
G_{12}	shear modulus for an orthotropic material
K_I	Mode I stress intensity factor
K_{II}	Mode II stress intensity factor
P_x	traction in the x-direction along a line segment
$r_{f,Y}$	index of correlation for a least squares fit to a set of data
u_s	displacement in the s-direction
β	angle between global x-axis and local $\bar{x}$-axis of an element
ν	Poisson's ratio for an isotropic material

ν_{12}	Poisson's ratio for an applied strain in the principal direction of an orthotropic material
${}^{i}\sigma_{n}$	normal component of stress at the center of the ith element
${}^{i}\sigma_{s}$	shear component of stress at the center of the ith element
σ_{xx}	normal stress in the x-direction
σ_{yy}	normal stress in the y-direction
τ_{xy}	shear stress evaluated in x-y coordinates

Abstract

This investigation presents analyses of several fracture mechanics problems via the Boundary Element Method. Specifically, an indirect procedure known as the Displacement Discontinuity Method was used to solve problems involving cracks in isotropic or specially orthotropic materials. Infinite as well as finite regions were considered.

A series of configurations were analyzed and compared with either analytic solutions or results from a finite element model. Agreement for the infinite-domain problems was excellent, while solutions to the finite-domain problems ranged from good to excellent.

Advantages and disadvantages of the Displacement Discontinuity Method are briefly discussed. The main advantage of the method is the requirement to model only the boundary of the problem under consideration. The major disadvantage is the time required to solve the resulting fully-populated matrix equation.

Separate FORTRAN codes are provided as appendices for the two material types — isotropic and orthotropic. These programs may be utilized for either stress or fracture analyses. Program outputs include displacements, stresses, and stress intensity factors, as appropriate.

VALIDATION OF THE BOUNDARY ELEMENT METHOD APPLIED TO COMPLEX FRACTURE MECHANICS CONDITIONS

I. Introduction

In analyzing aircraft structures, a mathematical model is usually developed which involves an approximate representation of the physical component under consideration. The most common methods discretize the structure into a manageable number of smaller elements for which a mathematical solution is available. These methods may be divided into two groups (see Figure 1.1) based upon whether the entire domain or just the boundary is modeled.

The most common domain technique is the Finite Element Method (FEM), "which is a piecewise variation to minimize the total potential energy" (11:1) of the system. Another example is the Finite Difference Method, in which the differential equations of the system are approximated by finite differences (Newton forward difference, backward difference, central difference, etc.). In all cases, the domain techniques are characterized by an approximation of the system partial differential equations. The boundary conditions, however, are satisfied exactly. (See Cook (5) and Desai (9).)

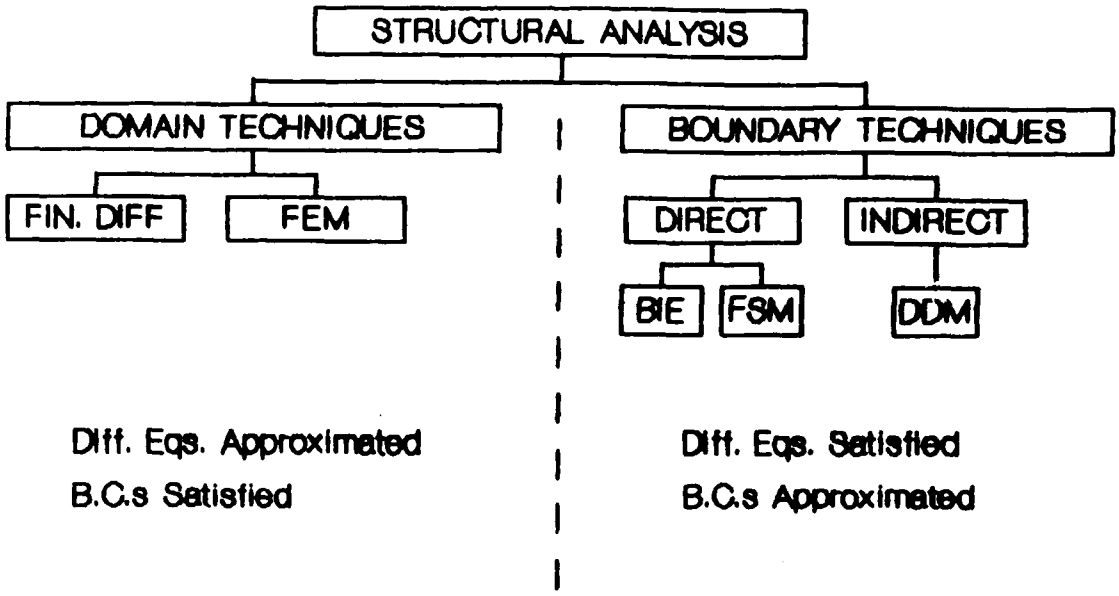

Figure 1.1. Numerical Methods of Structural Analysis

On the other hand, boundary techniques approximate the boundary conditions of the problem but they exactly satisfy the system partial differential equations. These methods can be further classified into *direct* or *indirect* methods, according to whether the boundary parameters are solved for directly or from some other system parameters (2:2).

The most common direct boundary element technique is the Boundary Integral Equation (BIE), or Boundary Element Method (BEM). This involves combining the problem at hand with another (for which the solution is known) in such a way that, when the strain energy of the system is integrated over the volume, Green's formula may be used to translate the volume integral into integrals involving only the

boundary of the problem. Applying the required boundary conditions then yields the solution. (See, for example, Rizzo (16), Snyder and Cruse (21), Fenner (10), Rizzo and Shippy (17), Cruse (8), Okada *et al* (14), Shi and Bezine (19), and Shih and Palazotto (20).)

A lesser-known direct method, called the Fictitious Stress Method (FSM), discretizes the boundary into a number of straight line segments over which the traction is assumed constant. As will be shown later, it is related to the indirect method chosen for this study — the Displacement Discontinuity Method (DDM) — both of which are presented by Crouch and Starfield (7).

The DDM is well-suited to problems in fracture mechanics because it uses as its basic element a line crack. That is, each element is considered to be composed of two surfaces which are coincident along a line segment. By a judicious selection of the definitions of each element, problems involving cracks in a finite or in an infinite body may be solved.

Besides being able to provide solutions to problems involving infinite domains, the boundary techniques have an advantage over the domain techniques due to the requirement to model only the boundary. This reduction of order of the problem is especially useful considering that fewer elements (and therefore fewer degrees of freedom) must be used to solve a given problem.

There are drawbacks, however. The domain techniques are able to take full advantage of efficient, banded-matrix solution routines. The boundary techniques, on the other hand, produce fully-populated matrices, which increases the computational time required for a given number of degrees of freedom. Thus, there is a trade-off between both techniques in problems requiring a large number of elements.

Nevertheless, a boundary element technique — specifically, the Displacement Discontinuity Method — was used in this study and its use in problems of fracture mechanics validated. First, a general outline of the method is presented, followed by its use for an isotropic material. Next, application of the DDM to problems involving a specially orthotropic material is demonstrated. For both cases, stress analysis and fracture mechanics applications are reviewed. Finally, some of the advantages and disadvantages of the DDM are briefly discussed.

Included as appendices are the two FORTRAN programs used in this study. The first program (TWODD — Appendix C) was extracted directly from Crouch and Starfield (7:293-300) for the analysis of an isotropic material. This program was modified only slightly to include computation of stress intensity factors. The second program (TWODDO — Appendix D) is a modification of the former to incorporate a specially orthotropic material.

II. Theoretical Discussion

The DDM involves the concept of a *displacement discontinuity* along a line crack, which may be imagined "as a line crack whose opposing surfaces have been displaced relative to one another." (7:79) The DDM uses the special case where the relative displacements are constant along the entire crack. In reality, the relative displacements vary over the entire length of the crack; however, if the line crack is discretized into a sufficient number of smaller line cracks (*elements*), the displacements will be approximately constant over the length of each element. The solution obtained by superposition of the displacement fields of all the elements will then represent the true solution with sufficient accuracy. This is the basis of the DDM.

If a series of line cracks in an infinite plane are joined end-to-end to form a closed contour, two regions are formed. The interior region may be used to obtain the solution to a problem involving finite dimensionality, while the exterior region may be used to represent a cavity in an infinite body.

As will be seen later, the DDM involves the solution of a system of equations which are determined by specifying either (i) the tractions on each element, (ii) the displace-

ments of one of the surfaces of each element, or (iii) a combination of the two.

A. The Method

The Displacement Discontinuity Method is characterized by use of the solution to a line crack in an infinite plate where the two surfaces of the crack have a constant displacement with respect to one another (Figure 2.1). The displacement field for an arbitrarily oriented crack (element) is obtained from this solution via coordinate transformation.

For two or more elements, linear superposition is used by alternately considering only one element to have a displacement discontinuity present (i.e. — the displacements are considered continuous at the other element locations). The sum of each of these displacements then yields the displacement due to the presence of all the elements, assuming of course that the material is linearly elastic.

By applying appropriate boundary conditions, a linear system of equations is formed. Solution of this system for the relative displacements at each element then allows determination of the displacements and stresses at each element. The stresses and displacements at other points in the body can be obtained based on these same relative surface displacements.

The procedure may be divided into the following 11 steps:

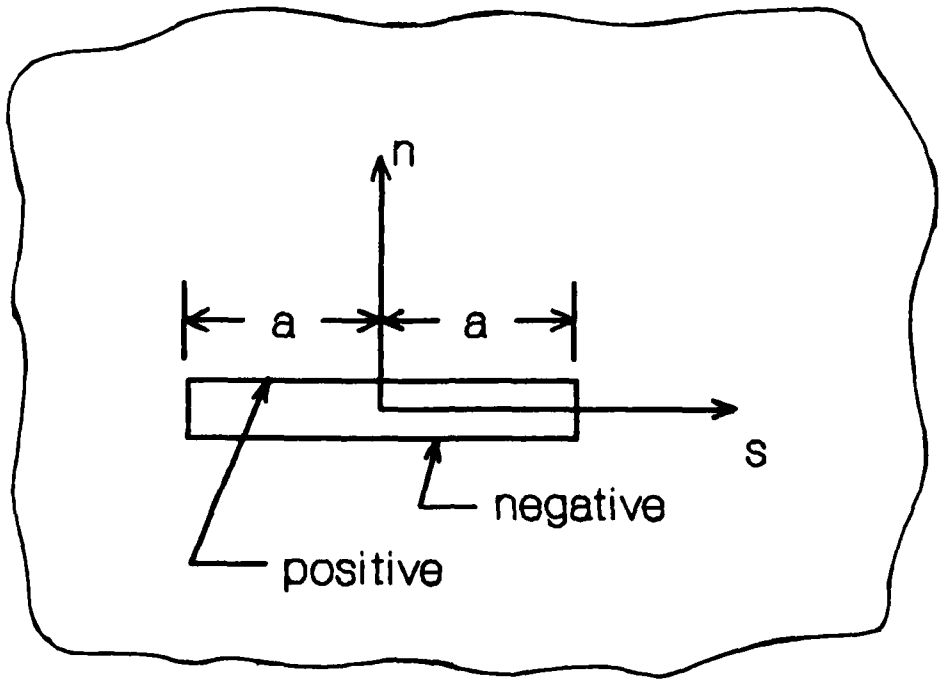

Requirement:

Displacements are continuous everywhere except across the crack.

Normal: $u_n^- - u_n^+ = D_n = \text{constant}$

Shear: $u_s^- - u_s^+ = D_s = \text{constant}$

Figure 2.1. Line Crack in an Infinite Plate

(1) Use the solution to the problem of a constant displacement discontinuity along a line segment (crack) in an infinite plate, which takes the following form:

$$u_{\bar{x}} = f_{1\bar{x}}(\bar{x},\bar{y})\, D_s + f_{1\bar{y}}(\bar{x},\bar{y})\, D_n \tag{2.1}$$

$$u_{\bar{y}} = f_{2\bar{x}}(\bar{x},\bar{y})\, D_s + f_{2\bar{y}}(\bar{x},\bar{y})\, D_n \tag{2.2}$$

$$\sigma_{\bar{x}\bar{x}} = f_{3\bar{x}}(\bar{x},\bar{y})\, D_s + f_{3\bar{y}}(\bar{x},\bar{y})\, D_n \tag{2.3}$$

$$\sigma_{\bar{y}\bar{y}} = f_{4\bar{x}}(\bar{x},\bar{y})\ D_s + f_{4\bar{y}}(\bar{x},\bar{y})\ D_n \tag{2.4}$$

$$\tau_{\bar{x}\bar{y}} = f_{5\bar{x}}(\bar{x},\bar{y})\ D_s + f_{5\bar{y}}(\bar{x},\bar{y})\ D_n \tag{2.5}$$

where $\bar{x}$, $\bar{y}$ (or s, n) is the local coordinate system (see Figure 2.2), the functions $f_{i\bar{x}}$ and $f_{i\bar{y}}$ depend only upon the local coordinates and the length of the crack, and D_s and D_n are the shear and normal displacement discontinuities, respectively. That is, D_s is a (displacement) discontinuity in the $\bar{x}$-direction while D_n is a discontinuity in the $\bar{y}$-direction such that

$$D_s = u_{\bar{x}}^- - u_{\bar{x}}^+ = u_s^- - u_s^+ \tag{2.6}$$

$$D_n = u_{\bar{y}}^- - u_{\bar{y}}^+ = u_n^- - u_n^+ \tag{2.7}$$

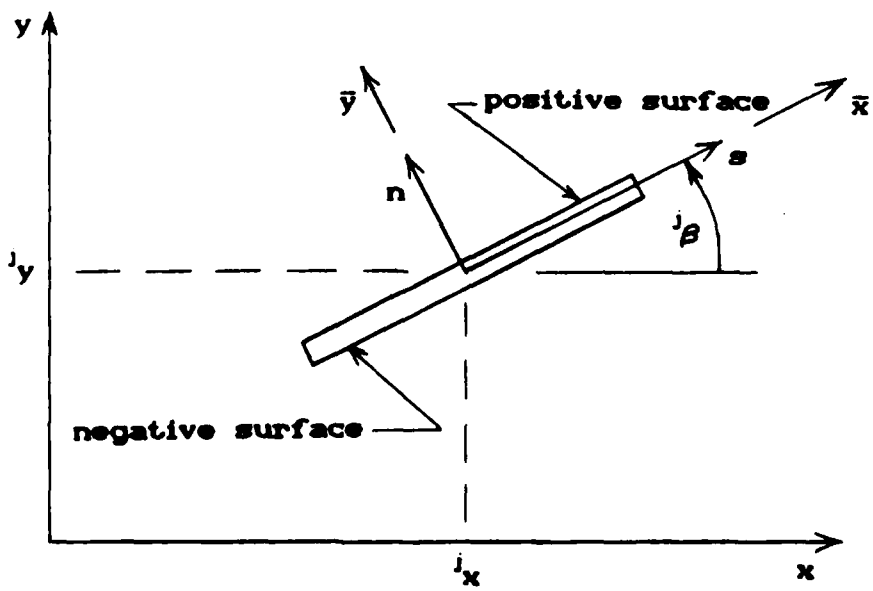

Figure 2.2. Coordinate Systems for a Single Element

where the superscripts "+" and "-" refer to the positive and negative surfaces, respectively, of the crack.

(2) Use coordinate transformation to relate the local coordinates $(\bar{x}, \bar{y})$ to the global coordinates (x, y) for an arbitrary rotation $({}^j\beta)$ and translation $({}^jx, {}^jy)$ as depicted in Figure 2.2:

$$\bar{x} = (x - {}^jx) \cos {}^j\beta + (y - {}^jy) \sin {}^j\beta \tag{2.8}$$

$$\bar{y} = -(x - {}^jx) \sin {}^j\beta + (y - {}^jy) \cos {}^j\beta \tag{2.9}$$

$$u_x = u_{\bar{x}} \cos {}^j\beta - u_{\bar{y}} \sin {}^j\beta \tag{2.10}$$

$$u_y = u_{\bar{x}} \sin {}^j\beta + u_{\bar{y}} \cos {}^j\beta \tag{2.11}$$

$$\sigma_{xx} = \sigma_{\bar{x}\bar{x}} \cos^2 {}^j\beta - \tau_{\bar{x}\bar{y}} \sin 2{}^j\beta + \sigma_{\bar{y}\bar{y}} \sin^2 {}^j\beta \tag{2.12}$$

$$\sigma_{yy} = \sigma_{\bar{x}\bar{x}} \sin^2 {}^j\beta + \tau_{\bar{x}\bar{y}} \sin 2{}^j\beta + \sigma_{\bar{y}\bar{y}} \cos^2 {}^j\beta \tag{2.13}$$

$$\tau_{xy} = (\sigma_{\bar{x}\bar{x}} - \sigma_{\bar{y}\bar{y}}) \sin {}^j\beta \cos {}^j\beta + \tau_{\bar{x}\bar{y}} (\cos^2 {}^j\beta - \sin^2 {}^j\beta) \tag{2.14}$$

(3) Consider a series of N line cracks (elements) joined end-to-end (Figure 2.3). Determine the effect on the ith element of displacement discontinuities at the *j*th element. Because the displacements and stresses *prescribed* at each element are specified in the local coordinate directions of the element, transform the above equations to the ith element's local system $(\bar{x}', \bar{y}')$:

$${}^iu_{\bar{x}'} = u_x \cos {}^i\beta + u_y \sin {}^i\beta \tag{2.15}$$

$${}^iu_{\bar{y}'} = -u_x \sin {}^i\beta + u_y \cos {}^i\beta \tag{2.16}$$

$${}^i\sigma_{\bar{x}'\bar{x}'} = \sigma_{xx} \cos^2 {}^i\beta + \tau_{xy} \sin 2{}^i\beta + \sigma_{yy} \sin^2 {}^i\beta \tag{2.17}$$

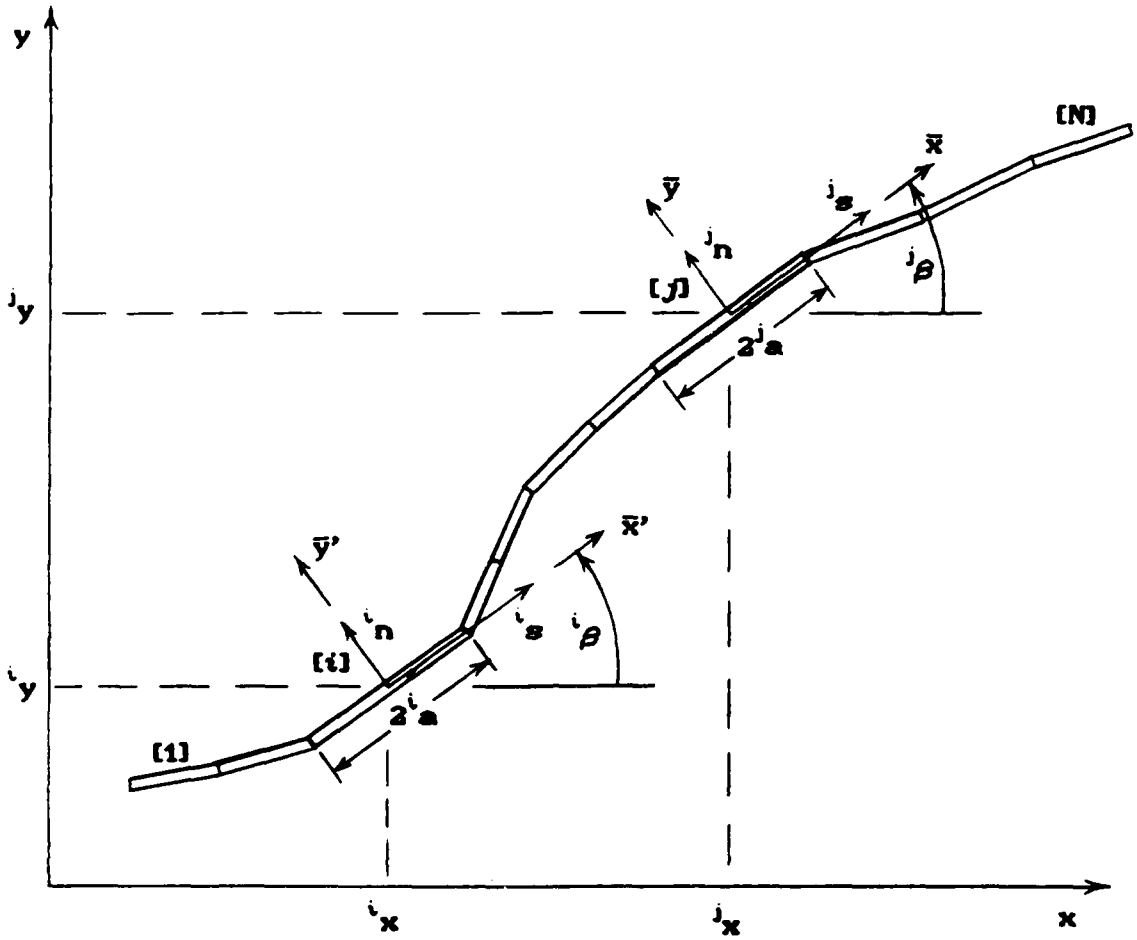

Figure 2.3. Series of N Line Cracks Joined End-to-End

$$^i\sigma_{\bar{y}'\bar{y}'} = \sigma_{xx} \sin^2 {}^i\beta - \tau_{xy} \sin 2^i\beta + \sigma_{yy} \cos^2 {}^i\beta \tag{2.18}$$

$$^i\tau_{\bar{x}'\bar{y}'} = -(\sigma_{xx} - \sigma_{yy}) \sin {}^i\beta \cos^i\beta + \tau_{xy} (\cos^2 {}^i\beta - \sin^2 {}^i\beta) \tag{2.19}$$

(4) Note that the displacements $^iu_{\bar{x}'}$ and $^iu_{\bar{y}'}$ and the stresses $^i\sigma_{\bar{y}'\bar{y}'}$ and $^i\tau_{\bar{x}'\bar{y}'}$ are equivalent to the local shear and normal displacements and stresses at the ith element:

$$ {}^{i}u_s = {}^{i}u_{\bar{x}'} \tag{2.20} $$

$$ {}^{i}u_n = {}^{i}u_{\bar{y}'} \tag{2.21} $$

$$ {}^{i}\sigma_s = {}^{i}\tau_{\bar{x}'\bar{y}'} \tag{2.22} $$

$$ {}^{i}\sigma_n = {}^{i}\sigma_{\bar{y}'\bar{y}'} \tag{2.23} $$

(5) Use the above four steps to express the effect of displacement discontinuities ${}^{j}D_s$ and ${}^{j}D_n$ at the jth element on the displacements and stresses at the center of the ith element:

$$ {}^{i}u_s = u_x \cos {}^{i}\beta + u_y \sin {}^{i}\beta \tag{2.24} $$

$$ {}^{i}u_n = - u_x \sin {}^{i}\beta + u_y \cos {}^{i}\beta \tag{2.25} $$

$$ {}^{i}\sigma_s = -(\sigma_{xx} - \sigma_{yy}) \sin {}^{i}\beta \cos {}^{i}\beta + \tau_{xy} (\cos^2 {}^{i}\beta - \sin^2 {}^{i}\beta) \tag{2.26} $$

$$ {}^{i}\sigma_n = \sigma_{xx} \sin^2 {}^{i}\beta - \tau_{xy} \sin 2{}^{i}\beta + \sigma_{yy} \cos^2 {}^{i}\beta \tag{2.27} $$

where subscripts "x" and "y" refer to the global coordinate directions, and

$$ \begin{aligned} u_x &= u_{\bar{x}} \cos {}^{j}\beta - u_{\bar{y}} \sin {}^{j}\beta \\ &= f_{1\bar{x}}(\bar{x},\bar{y}) {}^{j}D_s \cos {}^{j}\beta + f_{1\bar{y}}(\bar{x},\bar{y}) {}^{j}D_n \cos {}^{j}\beta \\ &\quad - f_{2\bar{x}}(\bar{x},\bar{y}) {}^{j}D_s \sin {}^{j}\beta - f_{2\bar{y}}(\bar{x},\bar{y}) {}^{j}D_n \sin {}^{j}\beta \\ &= \left[f_{1\bar{x}}(\bar{x},\bar{y}) \cos {}^{j}\beta - f_{2\bar{x}}(\bar{x},\bar{y}) \sin {}^{j}\beta \right] {}^{j}D_s \\ &\quad + \left[f_{1\bar{y}}(\bar{x},\bar{y}) \cos {}^{j}\beta - f_{2\bar{y}}(\bar{x},\bar{y}) \sin {}^{j}\beta \right] {}^{j}D_n \end{aligned} \tag{2.28} $$

$$
\begin{aligned}
u_y &= u_{\bar{x}} \sin {}^j\beta + u_{\bar{y}} \cos {}^j\beta \\
&= f_{1\bar{x}}(\bar{x},\bar{y})\,{}^jD_s \sin {}^j\beta + f_{1\bar{y}}(\bar{x},\bar{y})\,{}^jD_n \sin {}^j\beta \\
&\quad + f_{2\bar{x}}(\bar{x},\bar{y})\,{}^jD_s \cos {}^j\beta + f_{2\bar{y}}(\bar{x},\bar{y})\,{}^jD_n \cos {}^j\beta \\
&= \left[f_{1\bar{x}}(\bar{x},\bar{y}) \sin {}^j\beta + f_{2\bar{x}}(\bar{x},\bar{y}) \cos {}^j\beta\right]{}^jD_s \\
&\quad + \left[f_{1\bar{y}}(\bar{x},\bar{y}) \sin {}^j\beta + f_{2\bar{y}}(\bar{x},\bar{y}) \cos {}^j\beta\right]{}^jD_n
\end{aligned} \tag{2.29}
$$

$$
\begin{aligned}
\sigma_{xx} &= \sigma_{\bar{x}\bar{x}} \cos^2 {}^j\beta - \tau_{\bar{x}\bar{y}} \sin 2\,{}^j\beta + \sigma_{\bar{y}\bar{y}} \sin^2 {}^j\beta \\
&= f_{3\bar{x}}(\bar{x},\bar{y})\,{}^jD_s \cos^2 {}^j\beta + f_{3\bar{y}}(\bar{x},\bar{y})\,{}^jD_n \cos^2 {}^j\beta \\
&\quad - f_{5\bar{x}}(\bar{x},\bar{y})\,{}^jD_s \sin 2\,{}^j\beta - f_{5\bar{y}}(\bar{x},\bar{y})\,{}^jD_n \sin 2\,{}^j\beta \\
&\quad + f_{4\bar{x}}(\bar{x},\bar{y})\,{}^jD_s \sin^2 {}^j\beta + f_{4\bar{y}}(\bar{x},\bar{y})\,{}^jD_n \sin^2 {}^j\beta \\
&= \left[f_{3\bar{x}}(\bar{x},\bar{y}) \cos^2 {}^j\beta - f_{5\bar{x}}(\bar{x},\bar{y}) \sin 2\,{}^j\beta\right. \\
&\quad \left. + f_{4\bar{x}}(\bar{x},\bar{y}) \sin^2 {}^j\beta\right]{}^jD_s + \left[f_{3\bar{y}}(\bar{x},\bar{y}) \cos^2 {}^j\beta\right. \\
&\quad \left. - f_{5\bar{y}}(\bar{x},\bar{y}) \sin 2\,{}^j\beta + f_{4\bar{y}}(\bar{x},\bar{y}) \sin^2 {}^j\beta\right]{}^jD_n
\end{aligned} \tag{2.30}
$$

$$
\begin{aligned}
\sigma_{yy} &= \sigma_{\bar{x}\bar{x}} \sin^2 {}^j\beta + \tau_{\bar{x}\bar{y}} \sin 2\,{}^j\beta + \sigma_{\bar{y}\bar{y}} \cos^2 {}^j\beta \\
&= f_{3\bar{x}}(\bar{x},\bar{y})\,{}^jD_s \sin^2 {}^j\beta + f_{3\bar{y}}(\bar{x},\bar{y})\,{}^jD_n \sin^2 {}^j\beta \\
&\quad + f_{5\bar{x}}(\bar{x},\bar{y})\,{}^jD_s \sin 2\,{}^j\beta + f_{5\bar{y}}(\bar{x},\bar{y})\,{}^jD_n \sin 2\,{}^j\beta \\
&\quad + f_{4\bar{x}}(\bar{x},\bar{y})\,{}^jD_s \cos^2 {}^j\beta + f_{4\bar{y}}(\bar{x},\bar{y})\,{}^jD_n \cos^2 {}^j\beta \\
&= \left[f_{3\bar{x}}(\bar{x},\bar{y}) \sin^2 {}^j\beta + f_{5\bar{x}}(\bar{x},\bar{y}) \sin 2\,{}^j\beta\right. \\
&\quad \left. + f_{4\bar{x}}(\bar{x},\bar{y}) \cos^2 {}^j\beta\right]{}^jD_s + \left[f_{3\bar{y}}(\bar{x},\bar{y}) \sin^2 {}^j\beta\right. \\
&\quad \left. + f_{5\bar{y}}(\bar{x},\bar{y}) \sin 2\,{}^j\beta + f_{4\bar{y}}(\bar{x},\bar{y}) \cos^2 {}^j\beta\right]{}^jD_n
\end{aligned} \tag{2.31}
$$

$$
\begin{aligned}
\tau_{xy} &= (\sigma_{\bar{x}\bar{x}} - \sigma_{\bar{y}\bar{y}}) \sin {}^{j}\beta \cos {}^{j}\beta + \tau_{\bar{x}\bar{y}} (\cos^2 {}^{j}\beta - \sin^2 {}^{j}\beta) \\
&= \Big[f_{3\bar{x}}(\bar{x},\bar{y}) {}^{j}D_s + f_{3\bar{y}}(\bar{x},\bar{y}) {}^{j}D_n - f_{4\bar{x}}(\bar{x},\bar{y}) {}^{j}D_s \\
&\quad - f_{4\bar{y}}(\bar{x},\bar{y}) {}^{j}D_n \Big] \sin {}^{j}\beta \cos {}^{j}\beta + \Big[f_{5\bar{x}}(\bar{x},\bar{y}) {}^{j}D_s \\
&\quad + f_{5\bar{y}}(\bar{x},\bar{y}) {}^{j}D_n \Big] (\cos^2 {}^{j}\beta - \sin^2 {}^{j}\beta) \\
&= \Big\{ \Big[f_{3\bar{x}}(\bar{x},\bar{y}) - f_{4\bar{x}}(\bar{x},\bar{y}) \Big] \sin {}^{j}\beta \cos {}^{j}\beta \\
&\quad + f_{5\bar{x}}(\bar{x},\bar{y}) (\cos^2 {}^{j}\beta - \sin^2 {}^{j}\beta) \Big\} {}^{j}D_s \\
&\quad + \Big\{ \Big[f_{3\bar{y}}(\bar{x},\bar{y}) - f_{4\bar{y}}(\bar{x},\bar{y}) \Big] \sin {}^{j}\beta \cos {}^{j}\beta \\
&\quad + f_{5\bar{y}}(\bar{x},\bar{y}) (\cos^2 {}^{j}\beta - \sin^2 {}^{j}\beta) \Big\} {}^{j}D_n
\end{aligned}
\tag{2.32}
$$

By properly defining a new set of functions f_{ix} and f_{iy}, the global displacements and stresses can be written in the form

$$u_x = f_{1x}(\bar{x},\bar{y},{}^{j}\beta) {}^{j}D_s + f_{1y}(\bar{x},\bar{y},{}^{j}\beta) {}^{j}D_n \tag{2.33}$$

$$u_y = f_{2x}(\bar{x},\bar{y},{}^{j}\beta) {}^{j}D_s + f_{2y}(\bar{x},\bar{y},{}^{j}\beta) {}^{j}D_n \tag{2.34}$$

$$\sigma_{xx} = f_{3x}(\bar{x},\bar{y},{}^{j}\beta) {}^{j}D_s + f_{3y}(\bar{x},\bar{y},{}^{j}\beta) {}^{j}D_n \tag{2.35}$$

$$\sigma_{yy} = f_{4x}(\bar{x},\bar{y},{}^{j}\beta) {}^{j}D_s + f_{4y}(\bar{x},\bar{y},{}^{j}\beta) {}^{j}D_n \tag{2.36}$$

$$\tau_{xy} = f_{5x}(\bar{x},\bar{y},{}^{j}\beta) {}^{j}D_s + f_{5y}(\bar{x},\bar{y},{}^{j}\beta) {}^{j}D_n \tag{2.37}$$

while, by using Eqs (2.24) through (2.27), the local displacements and stresses take the following form:

$${}^{i}u_s = {}^{ij}B_{ss}(\bar{x},\bar{y},{}^{j}\beta) {}^{j}D_s + {}^{ij}B_{sn}(\bar{x},\bar{y},{}^{j}\beta) {}^{j}D_n \tag{2.38}$$

$${}^{i}u_n = {}^{ij}B_{ns}(\bar{x},\bar{y},{}^{j}\beta) {}^{j}D_s + {}^{ij}B_{nn}(\bar{x},\bar{y},{}^{j}\beta) {}^{j}D_n \tag{2.39}$$

$${}^{i}\sigma_s = {}^{ij}A_{ss}(\bar{x},\bar{y},{}^{j}\beta) {}^{j}D_s + {}^{ij}A_{sn}(\bar{x},\bar{y},{}^{j}\beta) {}^{j}D_n \tag{2.40}$$

$${}^{i}\sigma_n = {}^{ij}A_{ns}(\bar{x},\bar{y},{}^{j}\beta) {}^{j}D_s + {}^{ij}A_{nn}(\bar{x},\bar{y},{}^{j}\beta) {}^{j}D_n \tag{2.41}$$

where ${}^{ij}B_{ss}$, ${}^{ij}B_{sn}$, ..., ${}^{ij}A_{nn}$ are referred to as *influence coefficients*.

(6) Compute the total effect at the ith element as the sum of the effects of all N elements:

$$ {}^{i}u_s = \sum_{j=1}^{N} {}^{ij}B_{ss}\,{}^{j}D_s + \sum_{j=1}^{N} {}^{ij}B_{sn}\,{}^{j}D_n \tag{2.42} $$

$$ {}^{i}u_n = \sum_{j=1}^{N} {}^{ij}B_{ns}\,{}^{j}D_s + \sum_{j=1}^{N} {}^{ij}B_{nn}\,{}^{j}D_n \tag{2.43} $$

$$ {}^{i}\sigma_s = \sum_{j=1}^{N} {}^{ij}A_{ss}\,{}^{j}D_s + \sum_{j=1}^{N} {}^{ij}A_{sn}\,{}^{j}D_n \tag{2.44} $$

$$ {}^{i}\sigma_n = \sum_{j=1}^{N} {}^{ij}A_{ns}\,{}^{j}D_s + \sum_{j=1}^{N} {}^{ij}A_{nn}\,{}^{j}D_n \tag{2.45} $$

(7) Determine the effect of the ith element on itself (*element self-effects*) by computing the influence coefficients for the case that $i = j$ and $\bar{x} = \bar{y} = 0$. The result is that all of the stress influence coefficients (${}^{ii}A$'s) are single-valued, but that some of the displacement influence coefficients (${}^{ii}B$'s) are dual-valued. Namely,

$$ {}^{ii}B_{ss} = {}^{ii}B_{nn} = \mp\tfrac{1}{2} \quad \text{for } \bar{y} = 0_{\pm} \tag{2.46} $$

The discontinuous nature of ${}^{ii}B_{ss}$ and ${}^{ii}B_{nn}$ does not cause complications, however, if a direction of travel is chosen consistently when defining the boundary of a problem. Referring to Figure 2.4, Crouch and Starfield (7:64-65)

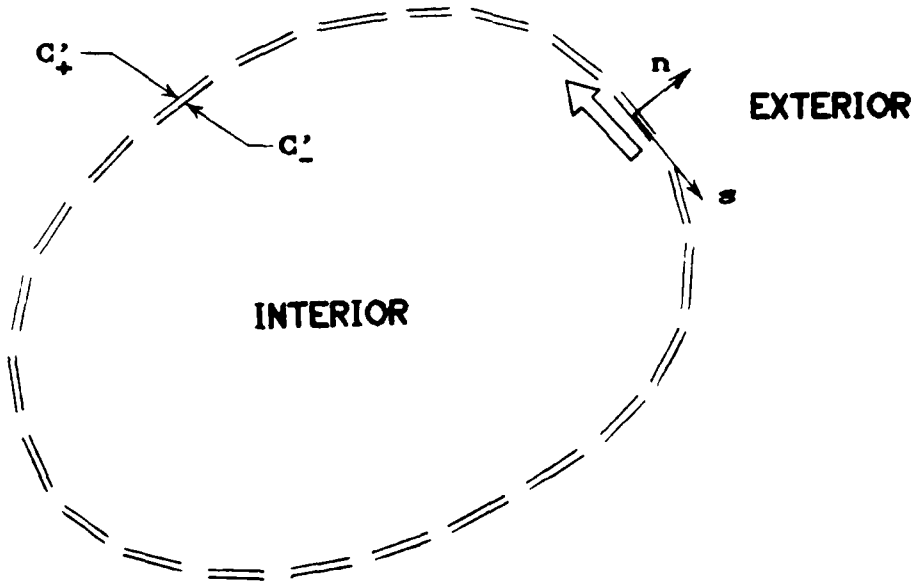

Direction of travel shown is for an exterior problem (cavity in an infinite plane).

Figure 2.4. Defining the Boundary of a Problem

state that

> the values of coefficients $[{}^{ii}B_{ss}]$ and $[{}^{ii}B_{nn}]$ depend upon the way in which curve C' is approached.... Curves C'_+ and C'_- can be regarded as the boundaries of the *interior* and *exterior regions*, respectively, of curve C'.... [If] we traverse curve C' in the clockwise sense ... then the negative side of the curve defines the boundary of the interior region. We can therefore avoid having to use different values for the coefficients $[{}^{ii}B_{ss}]$ and $[{}^{ii}B_{nn}]$ if we agree always to traverse the boundary in such a way that the outward normal points *away* from the region of interest. Accordingly, we adopt the following convention: *The boundary of a finite body is traversed in the clockwise sense, whereas the boundary of a cavity is traversed in the counterclockwise sense.* This convention leads to some simplification in computer programming because it means that coefficients $[{}^{ii}B_{ss}]$ and $[{}^{ii}B_{nn}]$ are equal to + 1/2 for both types of problems.

(8) Choose the equations appropriate for the prescribed boundary conditions of the problem. The boundary conditions at each element can be grouped into four categories:

(i) ${}^{i}\sigma_s$ and ${}^{i}\sigma_n$ are prescribed

(ii) ${}^{i}u_s$ and ${}^{i}u_n$ are prescribed

(iii) ${}^{i}u_s$ and ${}^{i}\sigma_n$ are prescribed

or (iv) ${}^{i}\sigma_s$ and ${}^{i}u_n$ are prescribed.

Thus, a system of 2N equations is formed:

$$ {}^{i}b_s = \sum_{j=1}^{N} {}^{ij}c_{ss}\,{}^{j}D_s + \sum_{j=1}^{N} {}^{ij}c_{sn}\,{}^{j}D_n \qquad i = 1,2,\ldots N \tag{2.47} $$

$$ {}^{i}b_n = \sum_{j=1}^{N} {}^{ij}c_{ns}\,{}^{j}D_s + \sum_{j=1}^{N} {}^{ij}c_{nn}\,{}^{j}D_n \qquad i = 1,2,\ldots N \tag{2.48} $$

where

$$ \begin{aligned} {}^{i}b_s &= {}^{i}\sigma_s \text{ or } {}^{i}u_s & {}^{i}b_n &= {}^{i}\sigma_n \text{ or } {}^{i}u_n \\ {}^{ij}c_{ss} &= {}^{ij}A_{ss} \text{ or } {}^{ij}B_{ss} & {}^{ij}c_{ns} &= {}^{ij}A_{ns} \text{ or } {}^{ij}B_{ns} \\ {}^{ij}c_{sn} &= {}^{ij}A_{sn} \text{ or } {}^{ij}B_{sn} & {}^{ij}c_{nn} &= {}^{ij}A_{nn} \text{ or } {}^{ij}B_{nn} \end{aligned} \tag{2.49} $$

as appropriate.

(9) Solve the system of 2N equations for the 2N unknowns (N unknown ${}^{j}D_s$ + N unknown ${}^{j}D_n$ = 2N unknowns) using direct Gaussian elimination. Because of the diagonal dominance of the matrix, no pivoting is required to ensure an accurate result.

(10) Compute the displacements and stresses at each element using

$$ {}^{i}u_s^- = \sum_{j=1}^{N} {}^{ij}B_{ss}\,{}^{j}D_s + \sum_{j=1}^{N} {}^{ij}B_{sn}\,{}^{j}D_n \tag{2.50} $$

$$ {}^{i}u_n^- = \sum_{j=1}^{N} {}^{ij}B_{ns}\,{}^{j}D_s + \sum_{j=1}^{N} {}^{ij}B_{nn}\,{}^{j}D_n \tag{2.51} $$

$$ {}^{i}\sigma_s = \sum_{j=1}^{N} {}^{ij}A_{ss}\,{}^{j}D_s + \sum_{j=1}^{N} {}^{ij}A_{sn}\,{}^{j}D_n \tag{2.52} $$

$$ {}^{i}\sigma_n = \sum_{j=1}^{N} {}^{ij}A_{ns}\,{}^{j}D_s + \sum_{j=1}^{N} {}^{ij}A_{nn}\,{}^{j}D_n \tag{2.53} $$

$$ {}^{i}u_s^+ = {}^{i}u_s^- - {}^{i}D_s \tag{2.54} $$

$$ {}^{i}u_n^+ = {}^{i}u_n^- - {}^{i}D_n \tag{2.55} $$

(11) Compute displacements and stresses at other points in the body using

$$ u_x = \sum_{j=1}^{N} f_{1x}(\bar{x},\bar{y},{}^{j}\beta)\ {}^{j}D_s + \sum_{j=1}^{N} f_{1y}(\bar{x},\bar{y},{}^{j}\beta)\ {}^{j}D_n \tag{2.56} $$

$$ u_y = \sum_{j=1}^{N} f_{2x}(\bar{x},\bar{y},{}^{j}\beta)\ {}^{j}D_s + \sum_{j=1}^{N} f_{2y}(\bar{x},\bar{y},{}^{j}\beta)\ {}^{j}D_n \tag{2.57} $$

$$ \sigma_{xx} = \sum_{j=1}^{N} f_{3x}(\bar{x},\bar{y},{}^{j}\beta)\ {}^{j}D_s + \sum_{j=1}^{N} f_{3y}(\bar{x},\bar{y},{}^{j}\beta)\ {}^{j}D_n \tag{2.58} $$

$$ \sigma_{yy} = \sum_{j=1}^{N} f_{4x}(\bar{x},\bar{y},{}^{j}\beta)\ {}^{j}D_s + \sum_{j=1}^{N} f_{4y}(\bar{x},\bar{y},{}^{j}\beta)\ {}^{j}D_n \tag{2.59} $$

$$\tau_{xy} = \sum_{j=1}^{N} f_{5x}(\bar{x},\bar{y},{}^{j}\beta)\ {}^{j}D_s + \sum_{j=1}^{N} f_{5y}(\bar{x},\bar{y},{}^{j}\beta)\ {}^{j}D_n \tag{2.60}$$

where

$$\bar{x} = (x - {}^{j}x)\cos{}^{j}\beta + (y - {}^{j}y)\sin{}^{j}\beta \tag{2.61}$$

$$\bar{y} = -(x - {}^{j}x)\sin{}^{j}\beta + (y - {}^{j}y)\cos{}^{j}\beta \tag{2.62}$$

and $({}^{j}x,{}^{j}y)$ are the midpoint coordinates of the jth element.

B. Computer Implementation

The DDM lends itself to being programmed into a computer with ease due to the modular nature of the procedure. Appendix C provides a listing of the FORTRAN code for program TWODD, along with an explanation of the input deck. First, the material properties and symmetry conditions are defined. Next, as the boundary conditions of the problem are input, the system of equations is set up. Then, the system is solved using direct Gaussian elimination. The stresses and displacements at each boundary element are then computed, followed by displacements and stresses at any other points of interest. Other features (inclusion of a title, initializing counters for loops, etc.) are added where appropriate.

For an isotropic material, the only material properties required for input are Young's modulus (E) and Poisson's ratio (ν). The shear modulus (G) is computed from these by

$$G = \frac{1}{2}\frac{E}{1+\nu} \tag{2.63}$$

For an orthotropic material E_1, E_2, G_{12}, and ν_{12} must be input.

If symmetry of geometry and loading exist in the problem, they may be incorporated to reduce the number of unknowns in the matrix equation. For example, suppose $x = 0$ is a line of symmetry (Figure 2.5). Then the conditions at element 2 are determined by those at element 1:

$$\begin{aligned} {}^2u_s &= -\,{}^1u_s & {}^2D_s &= -\,{}^1D_s \\ {}^2u_n &= +\,{}^1u_n & {}^2D_n &= +\,{}^1D_n \\ {}^2\sigma_s &= +\,{}^1\sigma_s & {}^2\sigma_n &= +\,{}^1\sigma_n \end{aligned} \tag{2.64}$$

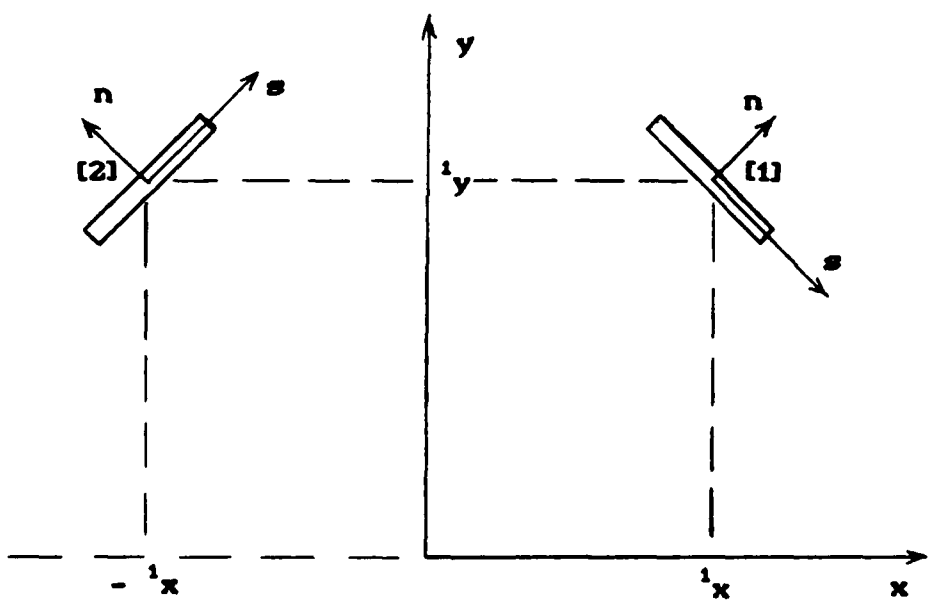

Figure 2.5. Line of Symmetry

In place of the original system of equations,

$$ {}^{1}u_s = {}^{11}c_{ss}\,{}^{1}D_s + {}^{12}c_{ss}\,{}^{2}D_s + {}^{11}c_{sn}\,{}^{1}D_n + {}^{12}c_{sn}\,{}^{2}D_n \tag{2.65} $$

$$ {}^{1}u_n = {}^{11}c_{ns}\,{}^{1}D_s + {}^{12}c_{ns}\,{}^{2}D_s + {}^{11}c_{nn}\,{}^{1}D_n + {}^{12}c_{nn}\,{}^{2}D_n \tag{2.66} $$

$$ {}^{2}u_s = {}^{21}c_{ss}\,{}^{1}D_s + {}^{22}c_{ss}\,{}^{2}D_s + {}^{21}c_{sn}\,{}^{1}D_n + {}^{22}c_{sn}\,{}^{2}D_n \tag{2.67} $$

$$ {}^{2}u_n = {}^{21}c_{ns}\,{}^{1}D_s + {}^{22}c_{ns}\,{}^{2}D_s + {}^{21}c_{nn}\,{}^{1}D_n + {}^{22}c_{nn}\,{}^{2}D_n \tag{2.68} $$

a new system of equations may be formed:

$$ {}^{1}u_s = {}^{11}c_{ss}\,{}^{1}D_s + {}^{12}c_{ss}\,{}^{2}D_s + {}^{11}c_{sn}\,{}^{1}D_n + {}^{12}c_{sn}\,{}^{2}D_n \tag{2.69} $$

$$ {}^{1}u_n = {}^{11}c_{ns}\,{}^{1}D_s + {}^{12}c_{ns}\,{}^{2}D_s + {}^{11}c_{nn}\,{}^{1}D_n + {}^{12}c_{nn}\,{}^{2}D_n \tag{2.70} $$

$$ {}^{2}D_s = -\,{}^{1}D_s \tag{2.71} $$

$$ {}^{2}D_n = +\,{}^{1}D_n \tag{2.72} $$

By substituting the last two equations into the first two, these may be rewritten as

$$ {}^{1}u_s = ({}^{11}c_{ss} - {}^{12}c_{ss})\,{}^{1}D_s + ({}^{11}c_{sn} + {}^{12}c_{sn})\,{}^{1}D_n \tag{2.73} $$

$$ {}^{1}u_n = ({}^{11}c_{ns} - {}^{12}c_{ns})\,{}^{1}D_s + ({}^{11}c_{nn} + {}^{12}c_{nn})\,{}^{1}D_n \tag{2.74} $$

$$ {}^{2}D_s = -\,{}^{1}D_s \tag{2.75} $$

$$ {}^{2}D_n = +\,{}^{1}D_n \tag{2.76} $$

Now, instead of solving four equations in four unknowns $({}^{1}D_s, {}^{1}D_n, {}^{2}D_s, {}^{2}D_n,)$, only the first two equations in two unknowns must be solved. The conditions at element 2 are then computed from the last two equations. Thus, application of symmetry cuts in half the size of the matrix equation. If two lines of symmetry exist, then the size of the matrix equation is reduced by a factor of four.

In order to solve problems involving infinite domains with a remotely applied stress, *changes* in displacement and stress are considered. This is done by adjusting the boundary conditions of each element to include the negatives of the tractions that would exist if the elements were not present. The solution is then obtained by summation of the stress and displacement changes, assuming zero initial displacement throughout the plane.

After the system of linear algebraic equations is set up, it may be solved using direct Gaussian elimination with no pivoting. This is because the logarithmic terms in the influence coefficients make the matrix diagonally dominant: a nearby element has more effect than a faraway element. Since the diagonal terms account for element self-effects, these coefficients are larger in magnitude than the other coefficients in the corresponding row/column.

Once the discontinuities at each element are determined, the stresses and displacements are computed readily as the sum of the influences from each element. In order to reduce the size of the program, only one subroutine is used for all influence coefficient calculations. The coefficients computed are the functions f_{1x}, f_{1y}, ..., f_{5y} in step 11 above (<u>The Method</u>). Coordinate transformation of these coefficients allows calculating the ${}^{ij}A$'s and ${}^{ij}B$'s, while no transformation is required for computing conditions at non-boundary points.

C. Stress Intensity Factors

When dealing with problems involving cracks in structures, a very useful parameter is the stress intensity factor, denoted by K. For two-dimensional, elastic fracture mechanics problems, this measure of the intensity of the stress singularity at the crack tip may be decomposed into two modes (Figure 2.6): Mode I is the "opening" mode and Mode II is the "shearing" mode.

If an infinite plate contains a single crack (Figure 2.7), the stress intensity factors in a region very close to the crack tip (the *near-field solution*) are given by (3:79, 81)

Mode I:

$$\sigma_y = \frac{K_I}{\sqrt{2\pi r}} \cos \theta/2 \left[1 + \sin \theta/2 \sin 3\theta/2 \right] \tag{2.77}$$

Mode II:

$$\tau_{xy} = \frac{K_{II}}{\sqrt{2\pi r}} \cos \theta/2 \left[1 - \sin \theta/2 \sin 3\theta/2 \right] \tag{2.78}$$

For a problem in which the stress field in the vicinity of the crack tip is known, the stress intensity factors may be determined by a limiting procedure (3:343):

$$K_I = \lim_{r \to small} \sigma_y \sqrt{2\pi r} \left[\cos \theta/2 \left[1 + \sin \theta/2 \sin 3\theta/2 \right]\right]^{-1} \tag{2.79}$$

MODE I:

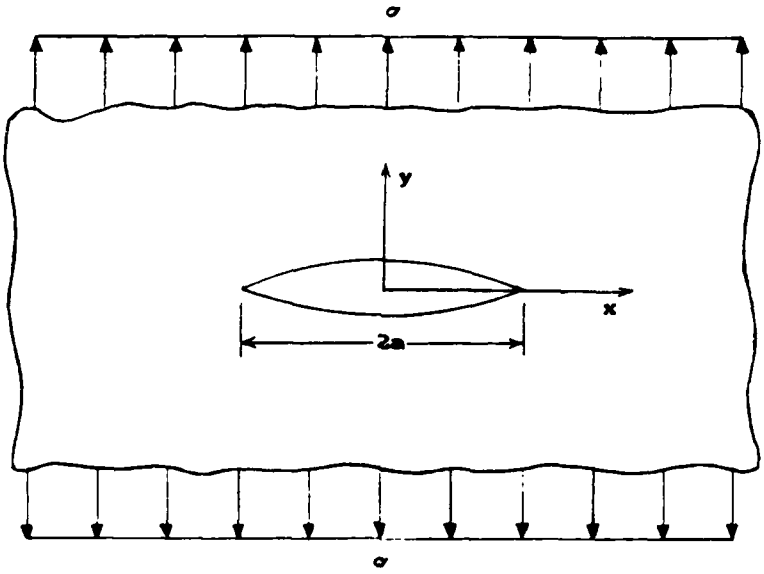

MODE II:

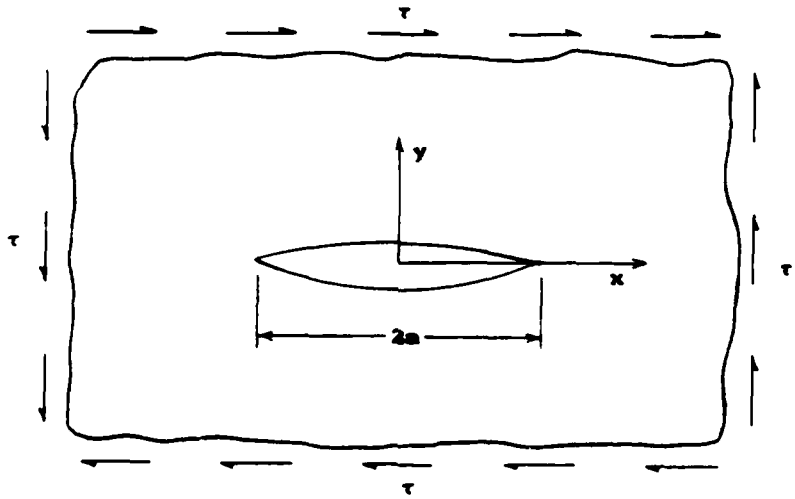

Figure 2.6. Fracture Mechanics Modes

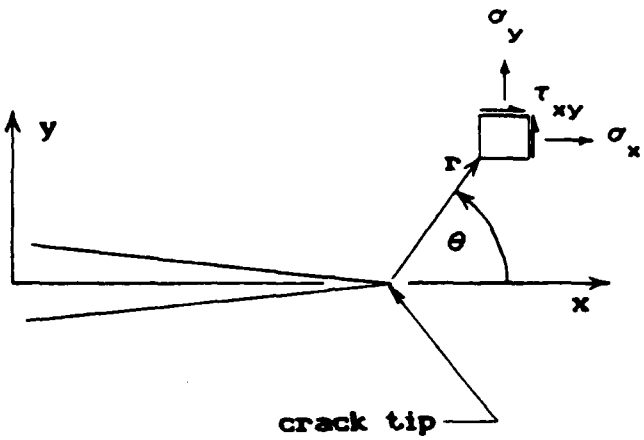

Figure 2.7. Coordinates for the Near-Field Solution

$$K_{II} = \lim_{r \to small} \tau_{xy} \sqrt{2\pi r} \left[\cos \theta/2 \left(1 + \sin \theta/2 \sin 3\theta/2 \right) \right]^{-1} \tag{2.80}$$

where r is the distance from the crack tip.

Due to numerical inaccuracies associated with digital computers when dealing with singularities, the stress intensity factors in this study were obtained by applying a least squares linear fit (1:264) to a plot of $\sigma\sqrt{2\pi r}$ *vs.* r (or $\tau\sqrt{2\pi r}$ *vs.* r for Mode II). Here the stresses are calculated directly in front of the crack ($\theta = 0$). Figure 2.8 depicts a typical curve generated using the DDM, along with the associated linear fit. Note the inaccuracy of the solution near the crack tip ($r = 0$). Far from the crack tip, the near-field solution is no longer valid. Therefore, the solution tends away from a straight line there.

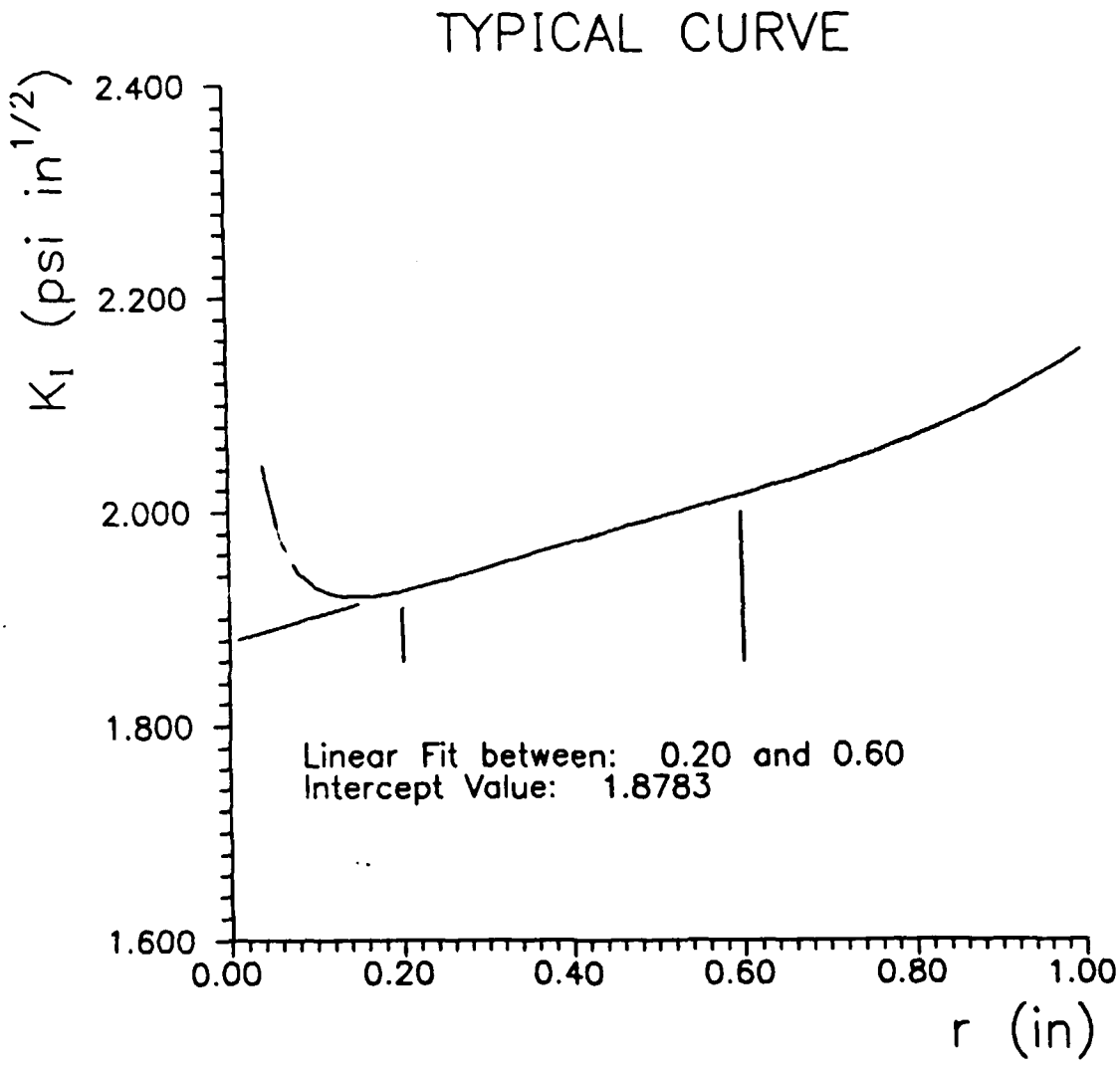

Figure 2.8. Typical Curve Generated from Application of the DDM

The suitability of the straight-line fit may be determined by examining the *index of correlation* (1:264-287), defined for an *n*th-order polynomial fit to *m* data points by

$$r_{f,Y} = \left[1 - \frac{\gamma^2}{m\,\sigma_Y^2} \right]^{1/2} \tag{2.81}$$

in which

$$\gamma^2 = \sum_{k=1}^{m} y_k^2 - \sum_{i=1}^{n} c_i v_i \tag{2.82}$$

$$\sigma_Y^2 = Y_{var} = \frac{1}{m} \sum_{j=1}^{m} (y_j - \mu_Y)^2 \tag{2.83}$$

$$\mu_Y = Y_{avg} = \frac{1}{m} \sum_{j=1}^{m} y_j \tag{2.84}$$

The best-fit polynomial is

$$y = \sum_{i=1}^{n} c_i x^{i-1} \tag{2.85}$$

with the coefficients c_i being determined by solving the linear *system of equations*

$$b_{ij}\, c_i = v_j \qquad i = 1,2,\ldots,n;\ j = 1,2,\ldots,n \tag{2.86}$$

where

$$b_{ij} = s_{i+j-1} \tag{2.87}$$

$$s_i = \sum_{k=1}^{m} x_k^{i-1} \qquad i = 1,2,\ldots,2n-1 \tag{2.88}$$

$$v_i = \sum_{k=1}^{m} x_k^{i-1} y_k \qquad i = 1,2,\ldots,n \tag{2.89}$$

and (x_k, y_k) are the coordinates of the kth data point.

For a linear fit, the definition of the index of correlation may be expressed as (12)

$$r_{f,Y} = \frac{\sum_{k=1}^{m} x_k y_k - \frac{1}{m}\sum_{k=1}^{m} x_k \sum_{k=1}^{m} y_k}{\left\{\left[\sum_{k=1}^{m} x_k^2 - \frac{1}{m}\left(\sum_{k=1}^{m} x_k\right)^2\right]\left[\sum_{k=1}^{m} y_k^2 - \frac{1}{m}\left(\sum_{k=1}^{m} y_k\right)^2\right]\right\}^{1/2}} \tag{2.90}$$

The value of $r_{f,Y}$ may range from zero to unity. The closer $r_{f,Y}$ is to unity, the better the fit. A perfect fit is represented by a value of exactly unity, while an extremely poor fit produces an index close to zero.

D. Modeling Considerations

Because the relative displacements of the surfaces of a real crack are not constant (as is assumed for the DDM element), a method of modeling a crack was chosen which would more closely resemble the true situation (Figure 2.9). Each half-crack (containing only one crack tip) was discretized into at least three DDM elements. For the coarsest case, the element at the tip was one-sixth the length of the half-crack, while the element furthest from the tip was one-half

Physical Model of One Half-Crack

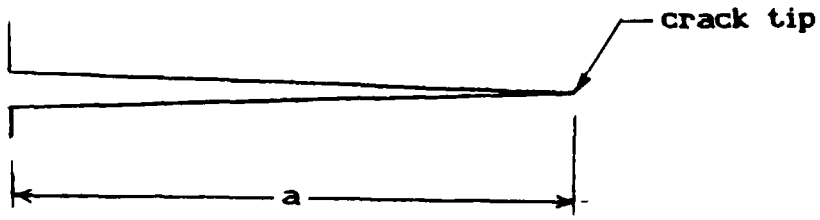

DDM Models of One Half-Crack

3 Half-Crack Elements:

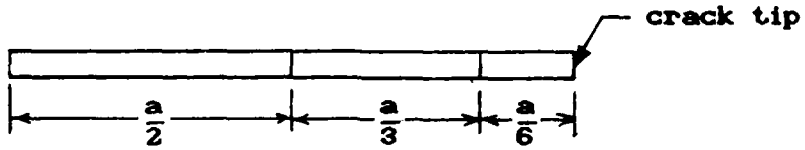

6 Half-Crack Elements:

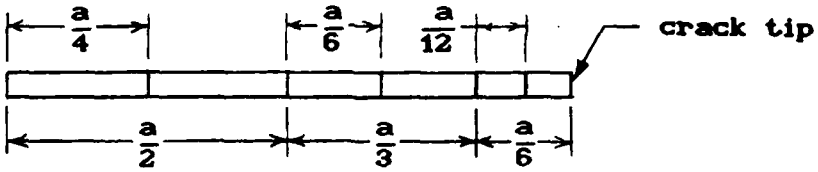

192 Half-Crack Elements:

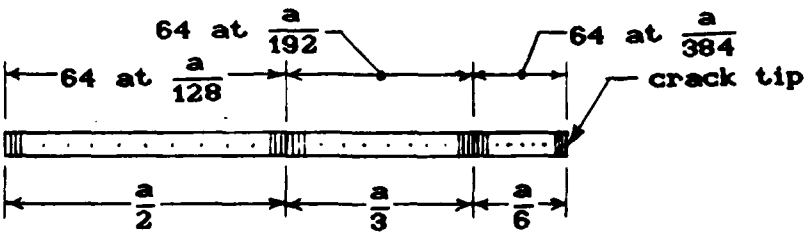

Figure 2.9. Modeling a Half-Crack Using DDM Elements

the length of the half-crack. This left the middle element with a length of one-third the total length.

Finer element meshes were created by dividing each element into equal numbers of smaller elements. Thus, a result stating that "192 half-crack elements were used" means that 64 equally-sized elements were used in the first one-sixth of the half-crack, 64 equally-sized elements were used in the next one-third, etc. This allowed the crack to more easily take on the elliptic shape it would assume under a tension loading.

III. Isotropic Development

A. Theoretical Development

The basic solution required for the Displacement Discontinuity Method for an isotropic material subjected to plane strain is given by Crouch (6). Using the notation from Chapter II, the displacements due to a constant displacement discontinuity along a line crack defined on $|\bar{x}| < a$ (Figure 3.1) is presented as

$$u_{\bar{x}} = D_s[\,2(1-\nu)f_{,\bar{y}} - \bar{y}f_{,\bar{x}\bar{x}}] + D_n[\,-(1-2\nu)f_{,\bar{x}} - \bar{y}f_{,\bar{x}\bar{y}}] \tag{3.1}$$

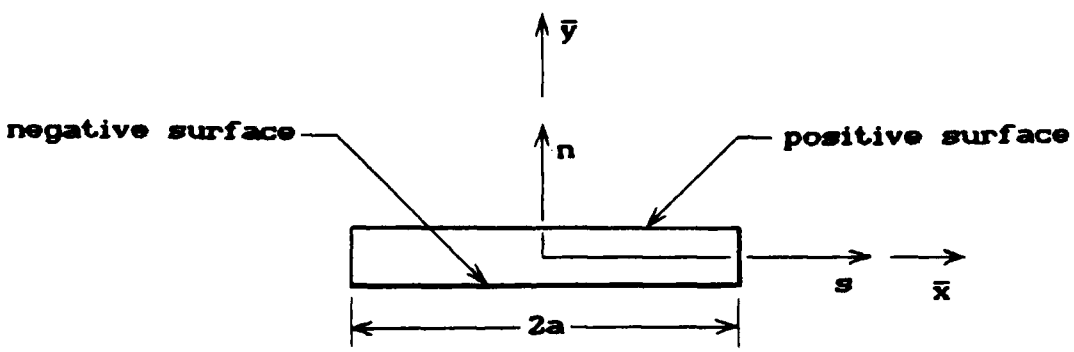

$$D_s = u_{\bar{x}}^- - u_{\bar{x}}^+ = \text{constant along crack}$$

$$D_n = u_{\bar{y}}^- - u_{\bar{y}}^+ = \text{constant along crack}$$

Figure 3.1. Displacement Discontinuity along a Line Crack

$$u_{\bar{y}} = D_s[-(1-2\nu)f_{,\bar{x}} - \bar{y}f_{,\bar{x}\bar{y}}] + D_n[2(1-\nu)f_{,\bar{y}} - \bar{y}f_{,\bar{x}\bar{x}}] \tag{3.2}$$

where

$$f(\bar{x},\bar{y}) = -\frac{1}{4\pi(1-\nu)}\left[\bar{y}\left(\arctan\frac{\bar{y}}{\bar{x}-a} - \arctan\frac{\bar{y}}{\bar{x}+a}\right) - (\bar{x}-a)\ln\left[(\bar{x}-a)^2+\bar{y}^2\right]^{1/2} + (\bar{x}+a)\ln\left[(\bar{x}+a)^2+\bar{y}^2\right]^{1/2}\right. \tag{3.3}$$

$$D_s = u_{\bar{x}}^- - u_{\bar{x}}^+ = \text{constant} \qquad \text{on } |\bar{x}| < a \tag{3.4}$$

$$D_n = u_{\bar{y}}^- - u_{\bar{y}}^+ = \text{constant} \qquad \text{on } |\bar{x}| < a \tag{3.5}$$

and the derivatives of $f(\bar{x},\bar{y})$ are

$$f_{,\bar{x}} = \frac{+1}{4\pi(1-\nu)}\left[\ln\left[(\bar{x}-a)^2+\bar{y}^2\right]^{1/2} - \ln\left[(\bar{x}+a)^2+\bar{y}^2\right]^{1/2}\right] \tag{3.6}$$

$$f_{,\bar{y}} = \frac{-1}{4\pi(1-\nu)}\left[\arctan\frac{\bar{y}}{\bar{x}-a} - \arctan\frac{\bar{y}}{\bar{x}+a}\right] \tag{3.7}$$

$$f_{,\bar{x}\bar{y}} = \frac{+1}{4\pi(1-\nu)}\left[\frac{\bar{y}}{(\bar{x}-a)^2+\bar{y}^2} - \frac{\bar{y}}{(\bar{x}+a)^2+\bar{y}^2}\right] \tag{3.8}$$

$$f_{,\bar{x}\bar{x}} = -f_{,\bar{y}\bar{y}} = \frac{+1}{4\pi(1-\nu)}\left[\frac{\bar{x}-a}{(\bar{x}-a)^2+\bar{y}^2} - \frac{\bar{x}+a}{(\bar{x}+a)^2+\bar{y}^2}\right] \tag{3.9}$$

The stresses for the isotropic material are determined from the stress-displacement relationships:

$$\sigma_{\bar{x}\bar{x}} = \frac{2G}{1-2\nu}\left[(1-\nu)\,u_{\bar{x},\bar{x}} + \nu\,u_{\bar{y},\bar{y}}\right] \tag{3.10}$$

$$\sigma_{\bar{y}\bar{y}} = \frac{2G}{1-2\nu}\left[\nu\,u_{\bar{x},\bar{x}} + (1-\nu)\,u_{\bar{y},\bar{y}}\right] \tag{3.11}$$

$$\tau_{\bar{x}\bar{y}} = G \left(u_{\bar{x},\bar{y}} + u_{\bar{y},\bar{x}} \right) \tag{3.12}$$

where $G = \frac{E}{2(1 + \nu)}$ is the material shear modulus.

Applying coordinate transformation, the displacements in the global (x, y) coordinate system are (7:91)

$$\begin{aligned} u_x = D_s \Big[& - (1 - 2\nu) \sin\beta \, f_{,\bar{x}} + 2(1 - \nu) \cos\beta \, f_{,\bar{y}} \\ & + \bar{y}\Big(\sin\beta \, f_{,\bar{x}\bar{y}} - \cos\beta \, f_{,\bar{x}\bar{x}}\Big)\Big] \\ + D_n \Big[& - (1 - 2\nu) \cos\beta \, f_{,\bar{x}} - 2(1 - \nu) \sin\beta \, f_{,\bar{y}} \\ & - \bar{y}\Big(\cos\beta \, f_{,\bar{x}\bar{y}} + \sin\beta \, f_{,\bar{x}\bar{x}}\Big)\Big] \end{aligned} \tag{3.13}$$

$$\begin{aligned} u_y = D_s \Big[& + (1 - 2\nu) \cos\beta \, f_{,\bar{x}} + 2(1 - \nu) \sin\beta \, f_{,\bar{y}} \\ & - \bar{y}\Big(\cos\beta \, f_{,\bar{x}\bar{y}} + \sin\beta \, f_{,\bar{x}\bar{x}}\Big)\Big] \\ + D_n \Big[& - (1 - 2\nu) \sin\beta \, f_{,\bar{x}} + 2(1 - \nu) \cos\beta \, f_{,\bar{y}} \\ & - \bar{y}\Big(\sin\beta \, f_{,\bar{x}\bar{y}} - \cos\beta \, f_{,\bar{x}\bar{x}}\Big)\Big] \end{aligned} \tag{3.14}$$

From these, the stresses in the global coordinate system are determined to be (7:92)

$$\begin{aligned} \sigma_{xx} = 2G \, D_s \Big[& 2 \cos^2\beta \, f_{,\bar{x}\bar{y}} + \sin 2\beta \, f_{,\bar{x}\bar{x}} \\ & + \bar{y}\Big(\cos 2\beta \, f_{,\bar{x}\bar{y}\bar{y}} - \sin 2\beta \, f_{,\bar{y}\bar{y}\bar{y}}\Big)\Big] \\ + 2G \, D_n \Big[& - f_{,\bar{x}\bar{x}} + \bar{y}\Big(\sin 2\beta \, f_{,\bar{x}\bar{y}\bar{y}} + \cos 2\beta \, f_{,\bar{y}\bar{y}\bar{y}}\Big)\Big] \end{aligned} \tag{3.15}$$

$$\begin{aligned} \sigma_{yy} = 2G \, D_s \Big[& 2 \sin^2\beta \, f_{,\bar{x}\bar{y}} - \sin 2\beta \, f_{,\bar{x}\bar{x}} \\ & - \bar{y}\Big(\cos 2\beta \, f_{,\bar{x}\bar{y}\bar{y}} - \sin 2\beta \, f_{,\bar{y}\bar{y}\bar{y}}\Big)\Big] \\ + 2G \, D_n \Big[& - f_{,\bar{x}\bar{x}} - \bar{y}\Big(\sin 2\beta \, f_{,\bar{x}\bar{y}\bar{y}} + \cos 2\beta \, f_{,\bar{y}\bar{y}\bar{y}}\Big)\Big] \end{aligned} \tag{3.16}$$

$$\tau_{xy} = 2G\, D_s \Big[\sin 2\beta\, f_{,\bar{x}\bar{y}} - \cos 2\beta\, f_{,\bar{x}\bar{x}} + \bar{y}\Big(\sin 2\beta\, f_{,\bar{x}\bar{y}\bar{y}} + \cos 2\beta\, f_{,\bar{y}\bar{y}\bar{y}}\Big)\Big]$$

$$+ 2G\, D_n \Big[- \bar{y}\Big(\cos 2\beta\, f_{,\bar{x}\bar{y}\bar{y}} - \sin 2\beta\, f_{,\bar{y}\bar{y}\bar{y}}\Big)\Big] \quad (3.17)$$

with $f_{,\bar{x}\bar{y}\bar{y}}$ and $f_{,\bar{y}\bar{y}\bar{y}}$ given by

$$f_{,\bar{x}\bar{y}\bar{y}} = \frac{+1}{4\pi(1-\nu)} \left[\frac{(\bar{x}-a)^2 - \bar{y}^2}{((\bar{x}-a)^2 + \bar{y}^2)^2} - \frac{(\bar{x}+a)^2 - \bar{y}^2}{((\bar{x}+a)^2 + \bar{y}^2)^2} \right] \quad (3.18)$$

$$f_{,\bar{y}\bar{y}\bar{y}} = \frac{+2\bar{y}}{4\pi(1-\nu)} \left[\frac{\bar{x}-a}{((\bar{x}-a)^2 + \bar{y}^2)^2} - \frac{\bar{x}+a}{((\bar{x}+a)^2 + \bar{y}^2)^2} \right] \quad (3.19)$$

The functions $f_{1x}(\bar{x},\bar{y},\beta)$ through $f_{5y}(\bar{x},\bar{y},\beta)$ (Chapter II) can be determined from the form of the displacements and stresses:

$$u_x = f_{1x}(\bar{x},\bar{y},\beta)\, D_s + f_{1y}(\bar{x},\bar{y},\beta)\, D_n \quad (3.20)$$

$$u_y = f_{2x}(\bar{x},\bar{y},\beta)\, D_s + f_{2y}(\bar{x},\bar{y},\beta)\, D_n \quad (3.21)$$

$$\sigma_{xx} = f_{3x}(\bar{x},\bar{y},\beta)\, D_s + f_{3y}(\bar{x},\bar{y},\beta)\, D_n \quad (3.22)$$

$$\sigma_{yy} = f_{4x}(\bar{x},\bar{y},\beta)\, D_s + f_{4y}(\bar{x},\bar{y},\beta)\, D_n \quad (3.23)$$

$$\tau_{xy} = f_{5x}(\bar{x},\bar{y},\beta)\, D_s + f_{5y}(\bar{x},\bar{y},\beta)\, D_n \quad (3.24)$$

The required equations now exist for computer implementation of the Displacement Discontinuity Method for an isotropic plate in a state of plane strain (program TWODD in Appendix C).

B. Stress Analysis Application

To verify the stress solutions used in program TWODD, the case of a circular hole in an infinite plate under uniaxial tension was considered (Figure 3.2). The analytical solution for the tangential stress of this problem is given by Timoshenko and Goodier (21:91) as

$$\sigma_t = \frac{S}{2}\left[1 + \frac{a^2}{r^2}\right] - \frac{S}{2}\left[1 + 3\frac{a^4}{r^4}\right]\cos 2\theta \qquad (3.25)$$

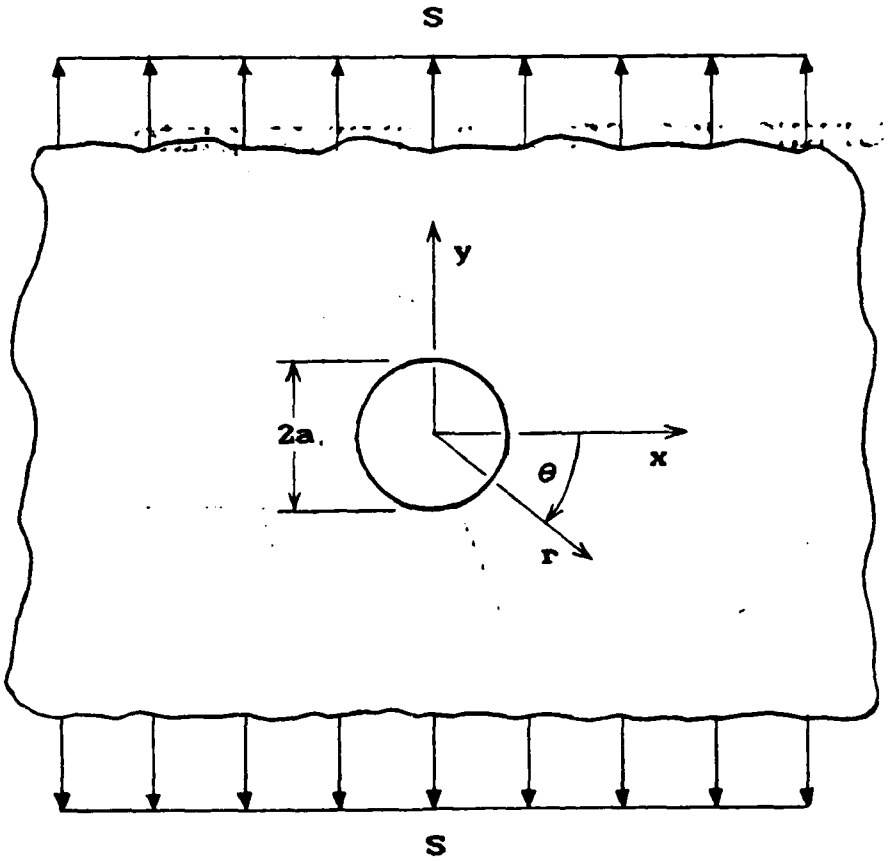

Figure 3.2. Circular Hole in an Infinite Plate under Uniaxial Tension (Isotropic)

For the case that $\theta = 0°$ (along the positive x-axis), the solution becomes

$$\sigma_t = \sigma_{xx} = \frac{S}{2}\left[2 + \frac{a^2}{r^2} + 3\frac{a^4}{r^4}\right] \tag{3.26}$$

Program TWODD was used to solve this doubly-symmetric problem using as few as three, and as many as 192, elements per quarter circle. Figure 3.3 indicates that even for the case of three elements, the solution obtained using the DDM is extremely accurate.

C. Fracture Mechanics Applications

Since the purpose of this study was to validate use of the DDM for fracture mechanics applications, the following problems were solved using program TWODD: (i) offset parallel cracks, (ii) slanted embedded crack (45° angle), and (iii) single edge crack near a hole.

1. Offset Parallel Cracks. The first fracture mechanics problem analyzed was the case of two offset cracks parallel to each other (Figure 3.4). The solution to this problem for an infinite plate was determined by Rooke and Cartwright (19) to be approximately

Location "A": $K_I = 1.77$ psi in$^{1/2}$

Location "B": $K_I = 1.86$ psi in$^{1/2}$

with an applied stress of 1 psi, and dimension "a" equal to 2 inches.

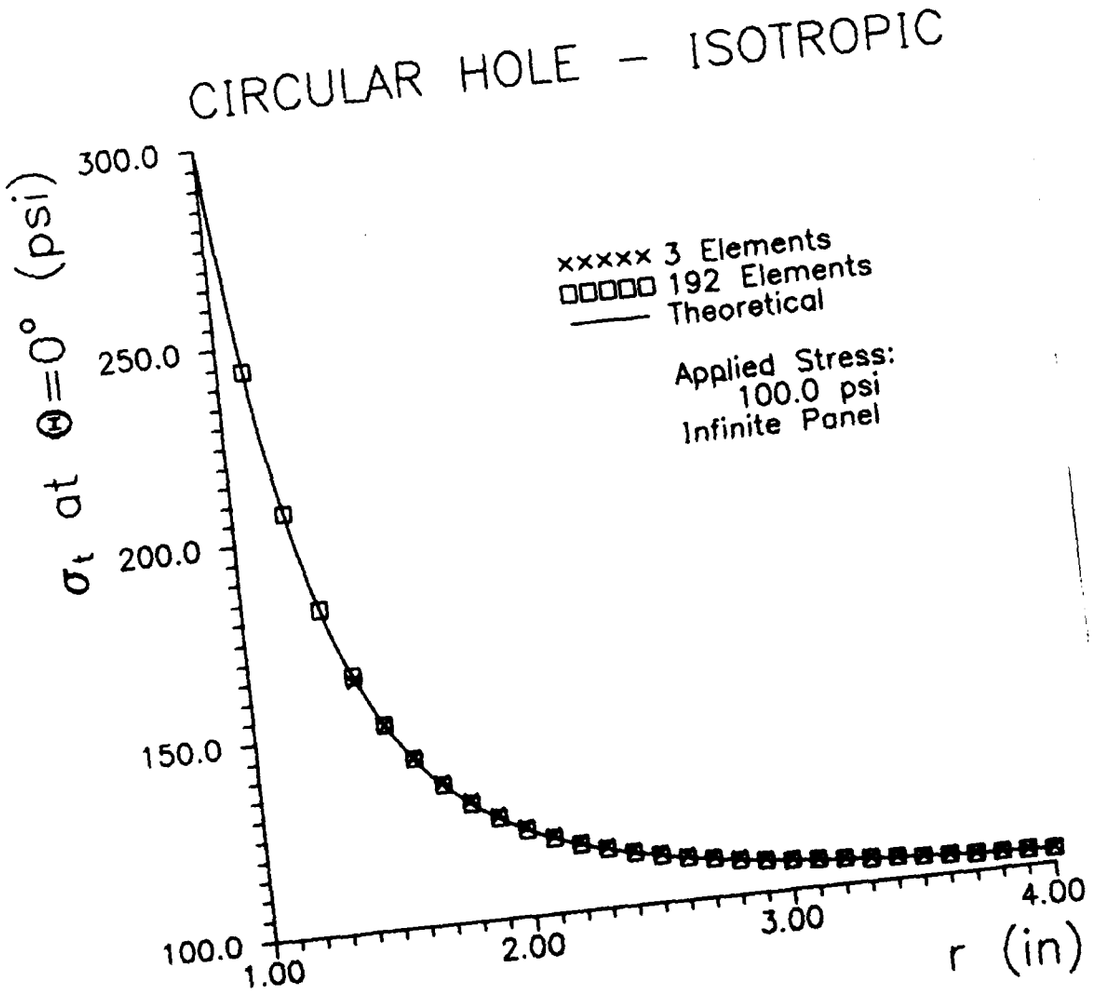

Figure 3.3. Stress Distribution for a Circular Hole in an Infinite Plate under Uniaxial Tension (Isotropic)

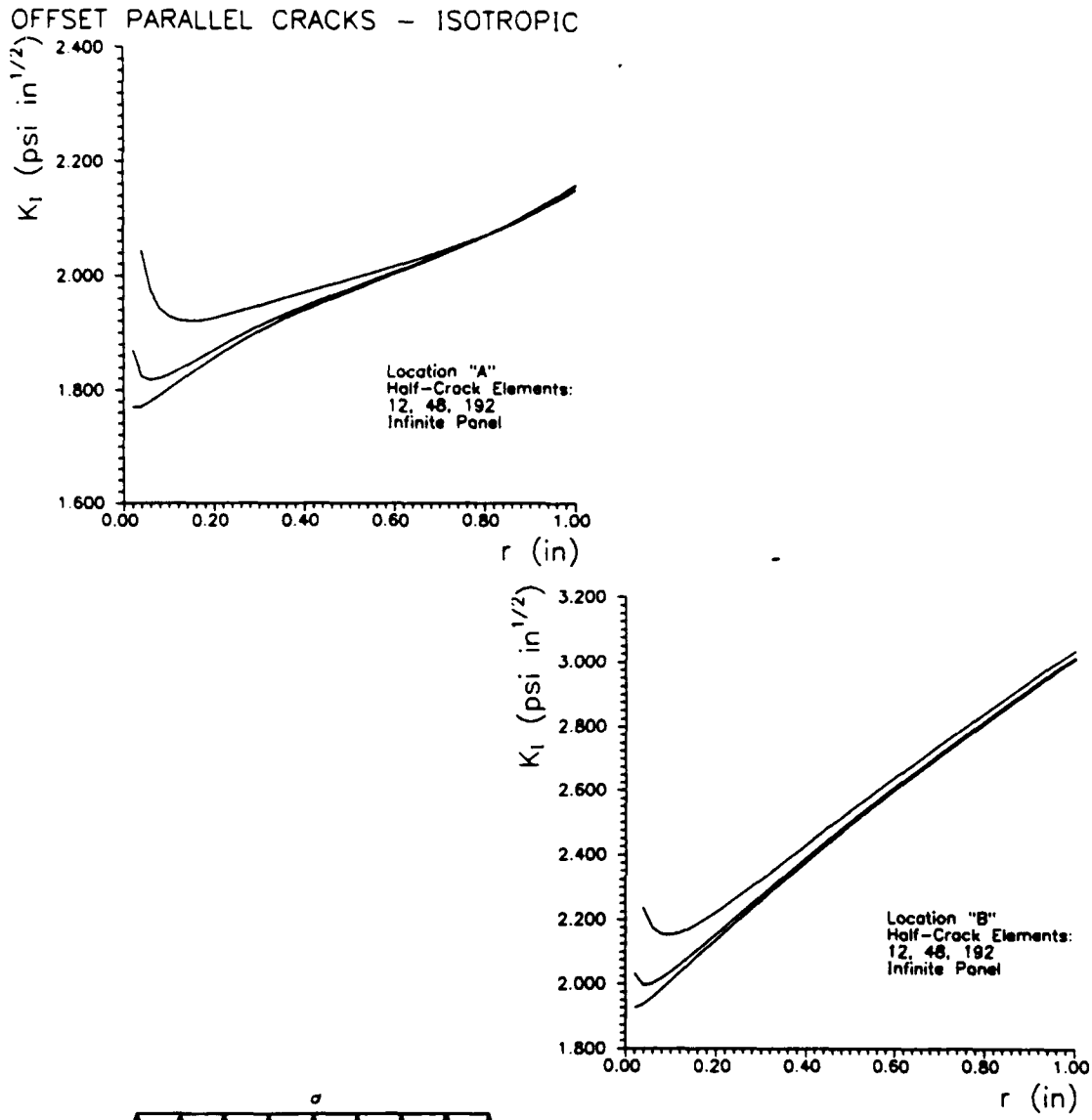

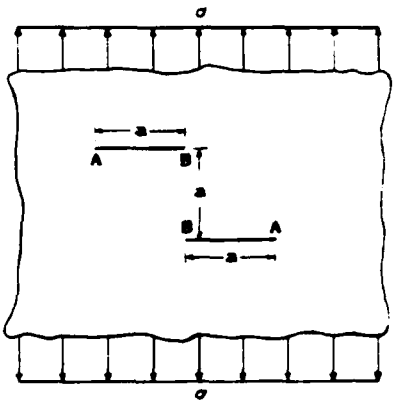

Figure 3.4. Offset Parallel Cracks in an Infinite Plate (Isotropic)

For the same configuration, the DDM yields the values in Table 3.1, indicating good convergence.

Table 3.1. Offset Parallel Cracks (Isotropic)

Elements	K_I (A)	K_I (B)
12	1.879	2.023
48	1.787	1.918
192	1.756	1.886

2. Slanted Embedded Crack (45° Angle). The second fracture mechanics problem analyzed was the case of a crack at a 45-degree angle to the direction of the applied load in a finite panel (Figure 3.5). Rajiyah and Atluri (16) describe a boundary element alternating method which they used to obtain the solution to this problem:

$$K_{II} = 1.378 \text{ psi in}^{1/2}$$

when the applied stress is 1 psi. For an applied load of 1000 psi, the solution would therefore be

$$K_{II} = 1378 \text{ psi in}^{1/2}$$

For this 1000 psi load, the DDM yields (with 192 half-crack elements) the values in Table 3.2, where "Length" is the size of each element along the outer boundary of the part (in inches). Again, good convergence is demonstrated — this time for a finite plate.

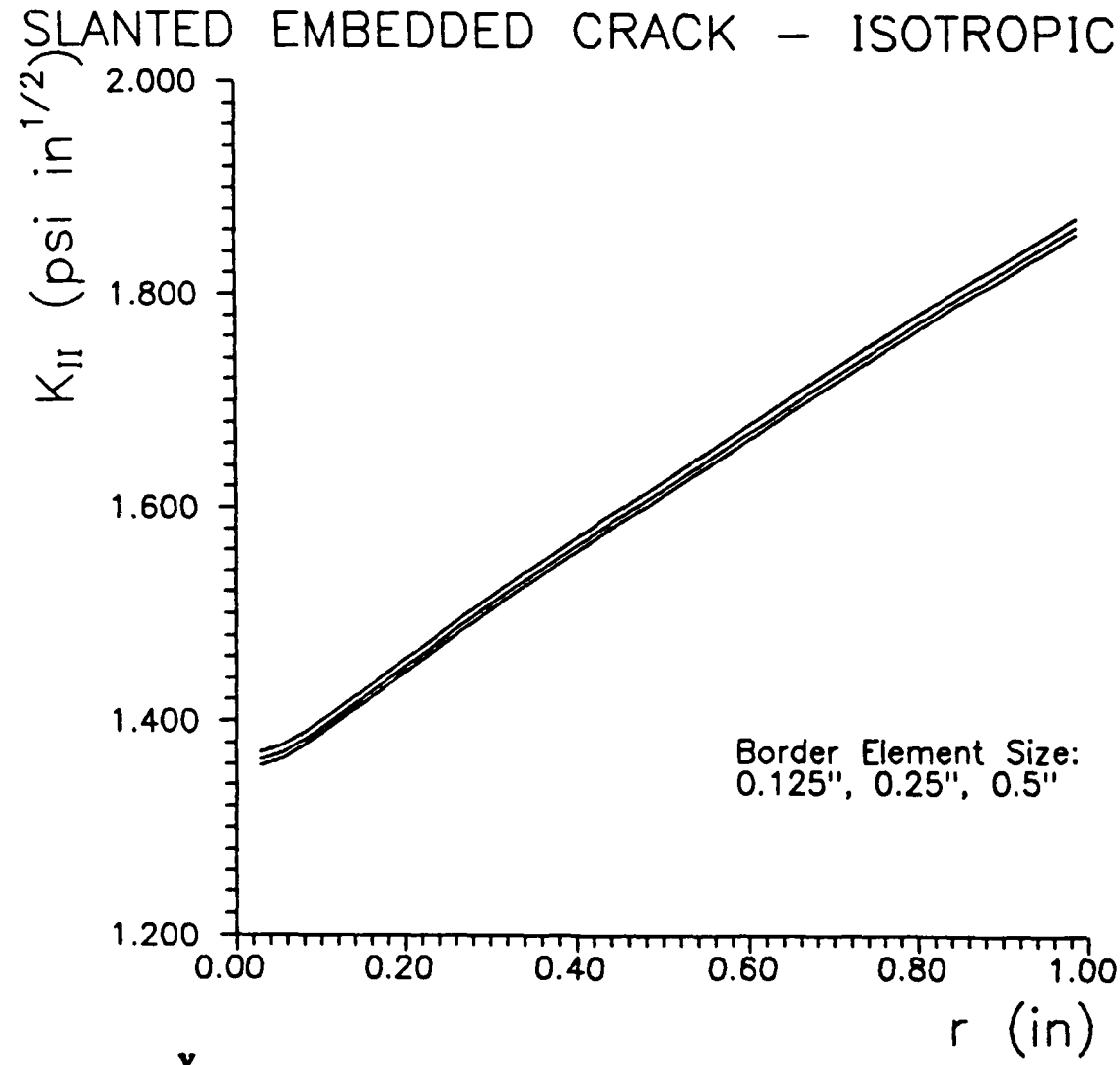

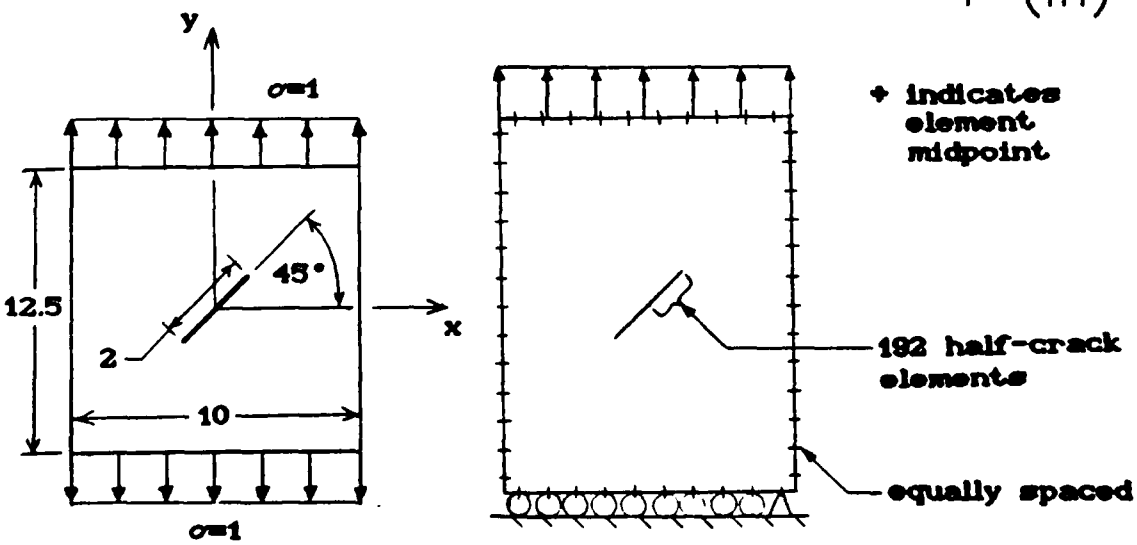

Figure 3.5. Slanted Embedded Crack (Isotropic)

Table 3.2. Slanted Embedded Crack (Isotropic)

Length	K_{II}	% Error
0.50	1382	+0.3
0.25	1382	+0.3
0.125	1381	+0.2

3. Single Edge Crack Near a Hole. The last fracture mechanics problem analyzed was the case of a single crack emanating from a hole at the edge of a finite plate (Figure 3.6). The solution to this problem, according to Rajiyah and Atluri (16), is

$$K_I = 3.493 \text{ psi in}^{1/2}$$

under an applied stress of 1 psi. Since this is a Mode I problem, $K_{II} = 0$ psi in$^{1/2}$.

For a 1 psi load, the DDM yields (with 96 half-crack elements) the values in Table 3.3, where "Length", again, is the size of each element along the outer boundary of the plate (in inches). Notice that convergence is slower for this more complicated boundary. However, the trend of monotonically approaching the solution as the number of elements increases is still evident.

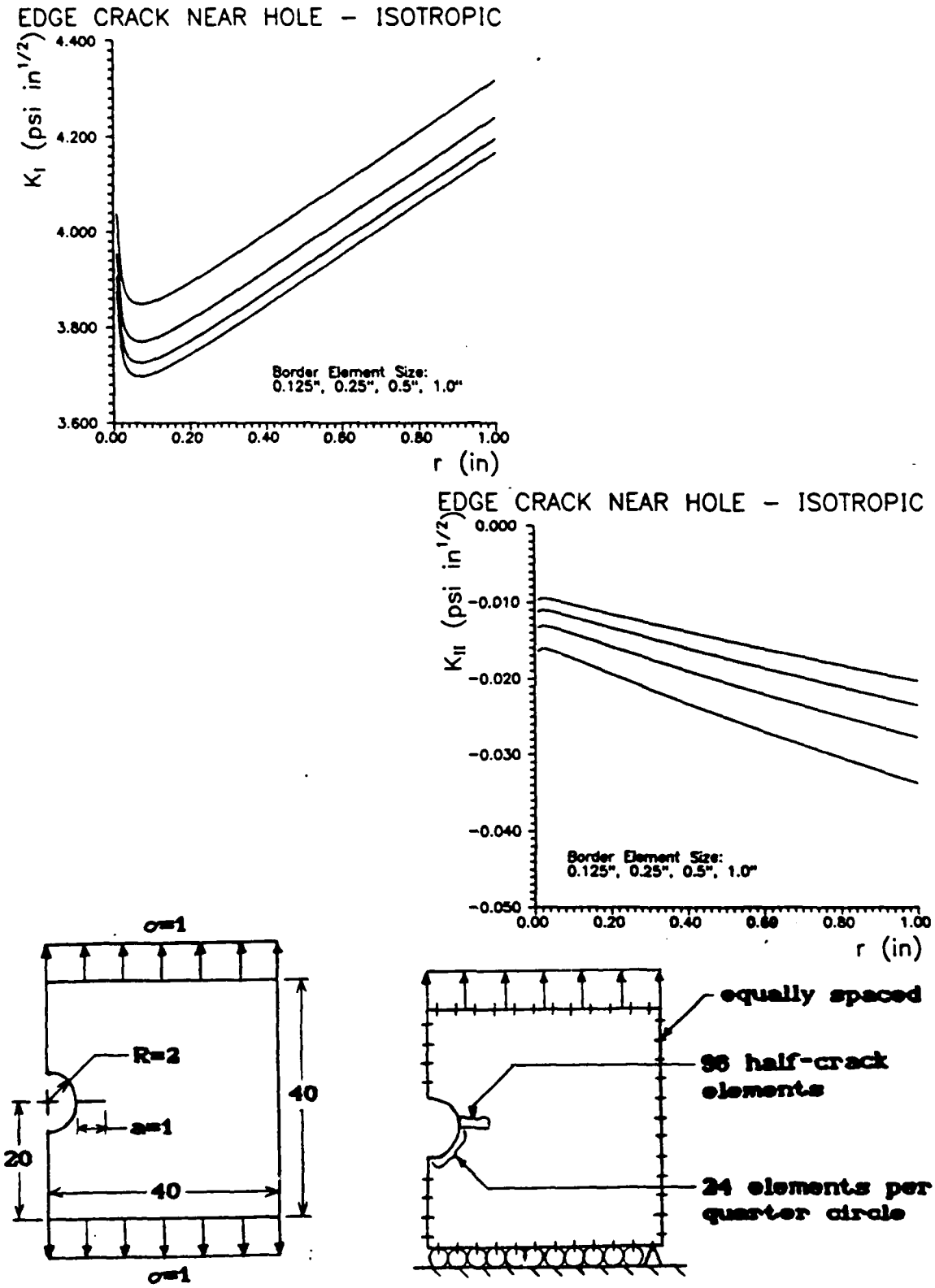

Figure 3.6. Single Edge Crack Near a Hole (Isotropic)

Table 3.3. Single Edge Crack Near a Hole (Isotropic)

Length	K_I	% Error	K_{II}
1.00	3.785	+8.4	-0.015
0.50	3.707	+6.1	-0.013
0.25	3.663	+4.9	-0.011
0.125	3.635	+4.1	-0.009

IV. Orthotropic Materials

The use of laminated composites in the construction of aircraft components has led to complications in problems of fracture mechanics. The theoretical solutions for isotropic materials, by themselves, will no longer suffice for determining stresses and stress intensity factors in modern aircraft parts. The isotropic DDM, however, may be modified to include specially orthotropic materials. That is accomplished in this chapter.

A. Theoretical Development

Reading through Crouch and Starfield (7), I noticed that for an isotropic material the form of the displacement solution required by the DDM could be determined from the solution to Kelvin's problem, which involves a concentrated load applied at a point in an infinite solid. If the load is distributed uniformly along the x-axis between x = - a and x = + a (Figure 4.1), integration yields the solution to a constant traction applied to a line crack (7:48):

$$u_x = \frac{P_x}{2G}\left[(3-4\nu)f + yf_{,y}\right] + \frac{P_y}{2G}\left[-yf_{,x}\right] \tag{4.1}$$

$$u_y = \frac{P_x}{2G}\left[-yf_{,x}\right] + \frac{P_y}{2G}\left[(3-4\nu)f + yf_{,y}\right] \tag{4.2}$$

where $f(x,y)$ is the same function as that in Chapter III for

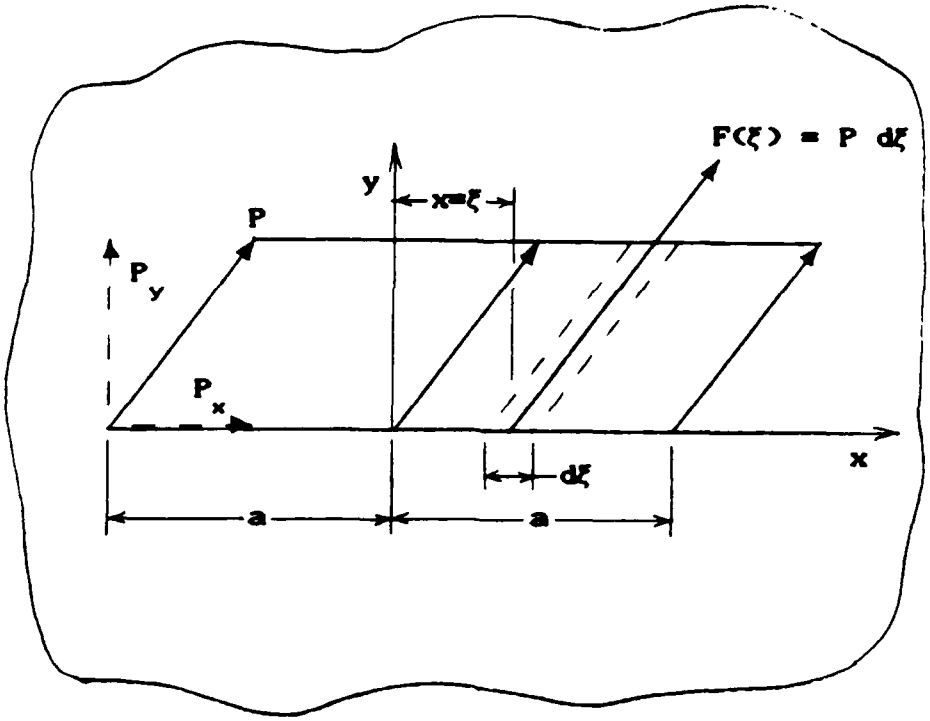

Figure 4.1. Constant Traction Applied to a Line Crack

the isotropic DDM.

Differentiating these displacements with respect to y only,

$$u_{x,y} = \frac{P_x}{2G}\left[(4 - 4\nu)f_{,y} + f_{,yy}\right] + \frac{P_y}{2G}\left[-f_{,x} - yf_{,xy}\right] \tag{4.3}$$

$$u_{y,y} = \frac{P_y}{2G}\left[-f_{,x} - yf_{,xy}\right] + \frac{P_x}{2G}\left[(4-4\nu)f_{,y} + f_{,yy}\right] \tag{4.4}$$

These may be written in the form

$$u_{x,y} = P_x\left[\mathbb{A}f_{,y} + \mathbb{B}yf_{,yy}\right] + P_y\left[\mathbb{C}f_{,x} + \mathbb{D}yf_{,xy}\right] \tag{4.5}$$

$$u_{y,y} = P_x\left[\mathbb{E}f_{,x} + \mathbb{F}yf_{,xy}\right] + P_y\left[\mathbb{G}f_{,y} + \mathbb{H}yf_{,yy}\right] \tag{4.6}$$

where $\mathbb{A}$, $\mathbb{B}$, ..., $\mathbb{H}$ are constants which depend only upon material properties.

Comparing to the solution presented for a constant displacement discontinuity (7:81),

$$u_x = D_x[2(1 - \nu)f_{,y} - yf_{,xx}] + D_y[-(1 - 2\nu)f_{,x} - yf_{,xy}] \tag{4.7}$$

$$u_y = D_x[(1 - 2\nu)f_{,x} - yf_{,xy}] + D_y[2(1 - \nu)f_{,y} - yf_{,xx}] \tag{4.8}$$

and realizing that $f_{,xx} = -f_{,yy}$, it is seen that the <u>forms</u> are identical. Therefore, in developing the displacement discontinuity solution for an orthotropic material, I used the solution to a constant traction along a line crack as a starting point (7:202):

$$u_x = \frac{+q_1 q_2}{2\pi c_{66}(q_1 - q_2)} P_x \left[\frac{\gamma_1}{q_1} I_1(\bar{x},\bar{y},\gamma_1) - \frac{\gamma_2}{q_2} I_1(\bar{x},\bar{y},\gamma_2)\right]$$
$$\frac{-1}{2\pi c_{66}(q_1 - q_2)} P_y \left[I_2(\bar{x},\bar{y},\gamma_1) - I_2(\bar{x},\bar{y},\gamma_2)\right] \tag{4.9}$$

$$u_y = \frac{-q_1 q_2}{2\pi c_{66}(q_1 - q_2)} P_x \left[I_2(\bar{x},\bar{y},\gamma_1) - I_2(\bar{x},\bar{y},\gamma_2)\right]$$
$$\frac{-1}{2\pi c_{66}(q_1 - q_2)} P_y \left[\frac{q_1}{\gamma_1} I_1(\bar{x},\bar{y},\gamma_1) - \frac{q_2}{\gamma_2} I_1(\bar{x},\bar{y},\gamma_2)\right] \tag{4.10}$$

where

$$I_1(\bar{x},\bar{y},\gamma_i) = \frac{\bar{y}}{\gamma_i A_i}\left[\Theta_1(\gamma_i) - \Theta_2(\gamma_i)\right]$$

$$- \left[\bar{x} - a + \frac{B_i\bar{y}}{2A_i}\right]\ln r_1(\gamma_i) + \left[\bar{x} + a + \frac{B_i\bar{y}}{2A_i}\right]\ln r_2(\gamma_i) \tag{4.11}$$

$$I_2(\bar{x},\bar{y},\gamma_i) = -\left[\bar{x} - a + \frac{B_i\bar{y}}{2A_i}\right]\Theta_1(\gamma_i)$$

$$+ \left[\bar{x} + a + \frac{B_i\bar{y}}{2A_i}\right]\Theta_2(\gamma_i) - \frac{\bar{y}}{\gamma_i A_i}\left[\Theta_1(\gamma_i) - \Theta_2(\gamma_i)\right] \tag{4.12}$$

$$\Theta_1(\gamma_i) = \arctan\left(\frac{\bar{y}/(\gamma_i A_i)}{(\bar{x} - a) + \frac{1}{2}B_i\bar{y}/A_i}\right) \tag{4.13}$$

$$\Theta_2(\gamma_i) = \arctan\left(\frac{\bar{y}/(\gamma_i A_i)}{(\bar{x} + a) + \frac{1}{2}B_i\bar{y}/A_i}\right) \tag{4.14}$$

$$r_1(\gamma_i) = \left[A_i(\bar{x} - a)^2 + B_i(\bar{x} - a)\bar{y} + C_i\bar{y}^2\right]^{1/2} \tag{4.15}$$

$$r_2(\gamma_i) = \left[A_i(\bar{x} + a)^2 + B_i(\bar{x} + a)\bar{y} + C_i\bar{y}^2\right]^{1/2} \tag{4.16}$$

$$A_i = (\gamma_i^2\cos^2\beta + \sin^2\beta) / \gamma_i^2 \tag{4.17}$$

$$B_i = (1 - \gamma_i^2)\sin 2\beta / \gamma_i^2 \tag{4.18}$$

$$C_i = (\gamma_i^2\sin^2\beta + \cos^2\beta) / \gamma_i^2 \tag{4.19}$$

$$c_{11}c_{66}\gamma_i^4 + [c_{12}(c_{12} + c_{66}) - c_{11}c_{22}]\gamma_i^2 + c_{22}c_{66} = 0 \tag{4.20}$$

$$\begin{Bmatrix} \sigma_{xx} \\ \sigma_{yy} \\ \tau_{xy} \end{Bmatrix} = \begin{bmatrix} c_{11} & c_{12} & 0 \\ c_{12} & c_{12} & 0 \\ 0 & 0 & c_{66} \end{bmatrix} \begin{Bmatrix} u_{x,x} \\ u_{y,y} \\ u_{x,y} + u_{y,x} \end{Bmatrix} \tag{4.21}$$

and β is the angle measured counterclockwise from the global x-axis to the line crack's local $\bar{x}$-axis. By differentiating

u_x and u_y with respect to y only, we can obtain the functions required for the DDM when the material is orthotropic.

If the form of the solution for a constant displacement discontinuity along $|x| < a$ is assumed to be

$$u_x = D_x\left\{\mathbb{A}\left[\Theta_1(\gamma_1) - \Theta_2(\gamma_1)\right] + \mathbb{B}\left[\Theta_1(\gamma_2) - \Theta_2(\gamma_2)\right]\right\} + D_y\left\{\mathbb{C}\left[\ln r_1(\gamma_1)/r_2(\gamma_1)\right] + \mathbb{D}\left[\ln r_1(\gamma_2)/r_2(\gamma_2)\right]\right\} \tag{4.22}$$

$$u_y = D_x\left\{\mathbb{E}\left[\Theta_1(\gamma_1) - \Theta_2(\gamma_1)\right] + \mathbb{F}\left[\Theta_1(\gamma_2) - \Theta_2(\gamma_2)\right]\right\} + D_y\left\{\mathbb{G}\left[\ln r_1(\gamma_1)/r_2(\gamma_1)\right] + \mathbb{H}\left[\ln r_1(\gamma_2)/r_2(\gamma_2)\right]\right\} \tag{4.23}$$

then the coefficients $\mathbb{A}$, $\mathbb{B}$, ..., $\mathbb{H}$ may be determined by requiring u_x and u_y satisfy (i) the appropriate boundary conditions and (ii) the equations of equilibrium. Coordinate transformation can then be used to represent u_x and u_y in terms of the local discontinuities $D_{\bar{x}}$ and $D_{\bar{y}}$.

The solution to constant displacement discontinuities $D_{\bar{x}}$ and $D_{\bar{y}}$ over a line segment of length 2a (see Figure 3.1) for an orthotropic plate in a state of generalized plane stress is thus given by (see Appendix A)

$$u_x = + Q\, D_{\bar{x}} \left[\frac{q_2}{\gamma_2}\left(\Theta_1(\gamma_1) - \Theta_2(\gamma_1)\right) - \frac{q_1}{\gamma_1}\left(\Theta_1(\gamma_2) - \Theta_2(\gamma_2)\right)\right]\cos\beta$$

$$+ Q\, D_{\bar{x}} \left[\ln\left(r_1(\gamma_1)/r_2(\gamma_1)\right) - \ln\left(r_1(\gamma_2)/r_2(\gamma_2)\right)\right]\sin\beta$$

$$- Q\, D_{\bar{y}} \left[\frac{q_2}{\gamma_2}\left(\Theta_1(\gamma_1) - \Theta_2(\gamma_1)\right) - \frac{q_1}{\gamma_1}\left(\Theta_1(\gamma_2) - \Theta_2(\gamma_2)\right)\right]\sin\beta$$

$$+ Q\, D_{\bar{y}} \left[\ln\left(r_1(\gamma_1)/r_2(\gamma_1)\right) - \ln\left(r_1(\gamma_2)/r_2(\gamma_2)\right)\right]\cos\beta \tag{4.24}$$

$$u_y = + \frac{Q}{\gamma_1\gamma_2} D_{\bar{x}} \left[\ln\left(r_1(\gamma_1)/r_2(\gamma_1)\right) - \ln\left(r_1(\gamma_2)/r_2(\gamma_2)\right)\right]\cos\beta$$

$$- Q\, D_{\bar{x}} \left[\frac{q_1}{\gamma_1}\left(\Theta_1(\gamma_1) - \Theta_2(\gamma_1)\right) - \frac{q_2}{\gamma_2}\left(\Theta_1(\gamma_2) - \Theta_2(\gamma_2)\right)\right]\sin\beta$$

$$- \frac{Q}{\gamma_1\gamma_2} D_{\bar{y}} \left[\ln\left(r_1(\gamma_1)/r_2(\gamma_1)\right) - \ln\left(r_1(\gamma_2)/r_2(\gamma_2)\right)\right]\sin\beta$$

$$- Q\, D_{\bar{y}} \left[\frac{q_1}{\gamma_1}\left(\Theta_1(\gamma_1) - \Theta_2(\gamma_1)\right) - \frac{q_2}{\gamma_2}\left(\Theta_1(\gamma_2) - \Theta_2(\gamma_2)\right)\right]\cos\beta \tag{4.25}$$

where

$$\Theta_1(\gamma_i) = \arctan\left(\frac{\bar{y}/(\gamma_i A_i)}{\bar{x} - a + \frac{1}{2}B_i\bar{y}/A_i}\right) \tag{4.26}$$

$$\Theta_2(\gamma_i) = \arctan\left(\frac{\bar{y}/(\gamma_i A_i)}{\bar{x} + a + \frac{1}{2}B_i\bar{y}/A_i}\right) \tag{4.27}$$

$$r_1(\gamma_i) = \left[A_i(\bar{x} - a)^2 + B_i(\bar{x} - a)\bar{y} + C_i\bar{y}^2\right]^{1/2} \tag{4.28}$$

$$r_2(\gamma_i) = \left[A_i(\bar{x} + a)^2 + B_i(\bar{x} + a)\bar{y} + C_i\bar{y}^2\right]^{1/2} \tag{4.29}$$

$$A_i = (\gamma_i^2 \cos^2 \beta + \sin^2 \beta) / \gamma_i^2 \tag{4.30}$$

$$B_i = (1 - \gamma_i^2) \sin 2\beta / \gamma_i^2 \tag{4.31}$$

$$C_i = (\gamma_i^2 \sin^2 \beta + \cos^2 \beta) / \gamma_i^2 \tag{4.32}$$

$$Q = \frac{1}{2\pi} \frac{\gamma_1\gamma_2}{q_1\gamma_2 - q_2\gamma_1} \tag{4.33}$$

$$c_{11}c_{66}\gamma_i^4 + [c_{12}(c_{12} + 2c_{66}) - c_{11}c_{22}]\gamma_i^2 + c_{22}c_{66} = 0 \tag{4.34}$$

$$q_i = (c_{11}\gamma_i^2 - c_{66})/(c_{12} + c_{66}) \tag{4.35}$$

and c_{ij} are the orthotropic moduli:

$$c_{11} = \frac{E_1}{1 - \nu_{12}\nu_{21}} \qquad c_{12} = \frac{\nu_{12}E_2}{1 - \nu_{12}\nu_{21}} = \frac{\nu_{21}E_1}{1 - \nu_{12}\nu_{21}}$$

$$c_{22} = \frac{E_2}{1 - \nu_{12}\nu_{21}} \qquad c_{66} = G_{12} \tag{4.36}$$

The stresses for the orthotropic material are determined from the stress-displacement relationships:

$$\sigma_{xx} = c_{11}\, u_{x,x} + c_{12}\, u_{y,y} \tag{4.37}$$

$$\sigma_{yy} = c_{12}\, u_{x,x} + c_{22}\, u_{y,y} \tag{4.38}$$

$$\tau_{xy} = c_{66}\, u_{x,y} + c_{66}\, u_{y,x} \tag{4.39}$$

For a coordinate system $\bar{x},\bar{y}$ at an angle β with the global (material) coordinate system, the stress-displacement relationships become:

$$\sigma_{xx} = c_{11}\cos\beta\, u_{x,\bar{x}} - c_{11}\sin\beta\, u_{x,\bar{y}} + c_{12}\sin\beta\, u_{y,\bar{x}} + c_{12}\cos\beta\, u_{y,\bar{y}} \tag{4.40}$$

$$\sigma_{yy} = c_{12}\cos\beta\, u_{x,\bar{x}} - c_{12}\sin\beta\, u_{x,\bar{y}} + c_{22}\sin\beta\, u_{y,\bar{x}} + c_{22}\cos\beta\, u_{y,\bar{y}} \tag{4.41}$$

$$\tau_{xy} = c_{66}\sin\beta\, u_{x,\bar{x}} + c_{66}\cos\beta\, u_{x,\bar{y}} + c_{66}\cos\beta\, u_{y,\bar{x}} - c_{66}\sin\beta\, u_{y,\bar{y}} \tag{4.42}$$

Thus, for the case of constant displacement discontinuities, the stresses may be written (Appendix A)

$$\begin{aligned}\sigma_{xx} = {} & Q\, D_{\bar{x}} \Big[S_1 c_{11}\cos^2\beta - S_2 c_{11}\sin\beta\cos\beta \\ & - S_3 c_{12}\sin^2\beta - S_4 c_{12}\sin\beta\cos\beta \\ & + (R_{31} - R_{32})(c_{11} + c_{12}/\gamma_1\gamma_2)\sin\beta\cos\beta \\ & - (R_{41} - R_{42})(c_{11}\sin^2\beta - c_{12}\cos^2\beta/\gamma_1\gamma_2)\Big] \\ & - Q\, D_{\bar{y}} \Big[S_1 c_{11}\sin\beta\cos\beta - S_2 c_{11}\sin^2\beta \\ & + S_3 c_{12}\sin\beta\cos\beta + S_4 c_{12}\cos^2\beta \\ & - (R_{31} - R_{32})(c_{11}\cos^2\beta - c_{12}\sin^2\beta/\gamma_1\gamma_2) \\ & (R_{41} - R_{42})(c_{11} + c_{12}/\gamma_1\gamma_2)\sin\beta\cos\beta\Big]\end{aligned} \tag{4.43}$$

$$\begin{aligned}\sigma_{yy} = {} & Q\, D_{\bar{x}} \Big[S_1 c_{12}\cos^2\beta - S_2 c_{12}\sin\beta\cos\beta \\ & - S_3 c_{22}\sin^2\beta - S_4 c_{22}\sin\beta\cos\beta \\ & + (R_{31} - R_{32})(c_{12} + c_{22}/\gamma_1\gamma_2)\sin\beta\cos\beta \\ & - (R_{41} - R_{42})(c_{12}\sin^2\beta - c_{22}\cos^2\beta/\gamma_1\gamma_2)\Big] \\ & - Q\, D_{\bar{y}} \Big[S_1 c_{12}\sin\beta\cos\beta - S_2 c_{12}\sin^2\beta \\ & + S_3 c_{22}\sin\beta\cos\beta + S_4 c_{22}\cos^2\beta \\ & - (R_{31} - R_{32})(c_{12}\cos^2\beta - c_{22}\sin^2\beta/\gamma_1\gamma_2) \\ & + (R_{41} - R_{42})(c_{12} + c_{22}/\gamma_1\gamma_2)\sin\beta\cos\beta\Big]\end{aligned} \tag{4.44}$$

$$
\begin{aligned}
\tau_{xy} = {} & Q\, D_{\bar{x}}\, c_{66} \Big[S_1 \sin\beta \cos\beta + S_2 \cos^2\beta \\
& - S_3 \sin\beta \cos\beta + S_4 \sin^2\beta \\
& + (R_{31} - R_{32})(\sin^2\beta + \cos^2\beta / \gamma_1\gamma_2) \\
& + (R_{41} - R_{42})(1 - 1/\gamma_1\gamma_2) \sin\beta \cos\beta \Big] \\
& - Q\, D_{\bar{y}}\, c_{66} \Big[S_1 \sin^2\beta + S_2 \sin\beta \cos\beta + S_3 \cos^2\beta \\
& - S_4 \sin\beta \cos\beta - (R_{31} - R_{32})(1 - 1/\gamma_1\gamma_2) \sin\beta \cos\beta \\
& - (R_{41} - R_{42})(\cos^2\beta + \sin^2\beta / \gamma_1\gamma_2) \Big]
\end{aligned}
\tag{4.45}
$$

where

$$S_1 = \frac{q_2}{\gamma_2} R_{11} - \frac{q_1}{\gamma_1} R_{12} \tag{4.46}$$

$$S_2 = \frac{q_2}{\gamma_2} R_{21} - \frac{q_1}{\gamma_1} R_{22} \tag{4.47}$$

$$S_3 = \frac{q_1}{\gamma_1} R_{11} - \frac{q_2}{\gamma_2} R_{12} \tag{4.48}$$

$$S_4 = \frac{q_1}{\gamma_1} R_{21} - \frac{q_2}{\gamma_2} R_{22} \tag{4.49}$$

$$
\begin{aligned}
R_{1i} &= \Big[\Theta_1(\gamma_i) - \Theta_2(\gamma_i) \Big]_{,\bar{x}} \\
&= - \frac{\bar{y} / \gamma_i}{A_i(\bar{x} - a)^2 + B_i(\bar{x} - a)\bar{y} + C_i\bar{y}^2} \\
&\qquad + \frac{\bar{y} / \gamma_i}{A_i(\bar{x} + a)^2 + B_i(\bar{x} + a)\bar{y} + C_i\bar{y}^2}
\end{aligned}
\tag{4.50}
$$

$$R_{2i} = \left[\Theta_1(\gamma_i) - \Theta_2(\gamma_i)\right]_{,\bar{x}}$$

$$= \frac{(\bar{x} - a) / \gamma_i}{A_i(\bar{x} - a)^2 + B_i(\bar{x} - a)\bar{y} + C_i\bar{y}^2} - \frac{(\bar{x} + a) / \gamma_i}{A_i(\bar{x} + a)^2 + B_i(\bar{x} + a)\bar{y} + C_i\bar{y}^2} \tag{4.51}$$

$$R_{3i} = \left[\ln\left[r_1(\gamma_i)/r_2(\gamma_i)\right]\right]_{,\bar{x}}$$

$$= \frac{A_i(\bar{x} - a) + \frac{1}{2}B_i\bar{y}}{A_i(\bar{x} - a)^2 + B_i(\bar{x} - a)\bar{y} + C_i\bar{y}^2} - \frac{A_i(\bar{x} + a) + \frac{1}{2}B_i\bar{y}}{A_i(\bar{x} + a)^2 + B_i(\bar{x} + a)\bar{y} + C_i\bar{y}^2} \tag{4.52}$$

and

$$R_{4i} = \left[\ln\left[r_1(\gamma_i)/r_2(\gamma_i)\right]\right]_{,\bar{y}}$$

$$= \frac{\frac{1}{2}B_i(\bar{x} - a) + C_i\bar{y}}{A_i(\bar{x} - a)^2 + B_i(\bar{x} - a)\bar{y} + C_i\bar{y}^2} - \frac{\frac{1}{2}B_i(\bar{x} + a) + C_i\bar{y}}{A_i(\bar{x} + a)^2 + B_i(\bar{x} + a)\bar{y} + C_i\bar{y}^2} \tag{4.53}$$

Thus, the functions in Chapter II for an orthotropic material are

$$f_{1x}(\bar{x},\bar{y},{}^j\beta) = Q\left[\frac{q_2}{\gamma_2}\left(\Theta_1(\gamma_1) - \Theta_2(\gamma_1)\right) - \frac{q_1}{\gamma_1}\left(\Theta_1(\gamma_2) - \Theta_2(\gamma_2)\right)\right]\cos {}^j\beta$$

$$+ Q\left[\ln\left(r_1(\gamma_1)/r_2(\gamma_1)\right) - \ln\left(r_1(\gamma_2)/r_2(\gamma_2)\right)\right]\sin {}^j\beta \tag{4.54}$$

$$f_{1y}(\bar{x},\bar{y},{}^j\beta) = Q\left[\ln\left(r_1(\gamma_1)/r_2(\gamma_1)\right) - \ln\left(r_1(\gamma_2)/r_2(\gamma_2)\right)\right]\cos {}^j\beta$$

$$- Q\left[\frac{q_2}{\gamma_2}\left(\Theta_1(\gamma_1) - \Theta_2(\gamma_1)\right) - \frac{q_1}{\gamma_1}\left(\Theta_1(\gamma_2) - \Theta_2(\gamma_2)\right)\right]\sin {}^j\beta \tag{4.55}$$

$$f_{2x}(\bar{x},\bar{y},{}^j\beta) = \frac{Q}{\gamma_1\gamma_2} D_{\bar{x}}\left[\ln\left(r_1(\gamma_1)/r_2(\gamma_1)\right) - \ln\left(r_1(\gamma_2)/r_2(\gamma_2)\right)\right]\cos {}^j\beta$$

$$- Q\left[\frac{q_1}{\gamma_1}\left(\Theta_1(\gamma_1) - \Theta_2(\gamma_1)\right) - \frac{q_2}{\gamma_2}\left(\Theta_1(\gamma_2) - \Theta_2(\gamma_2)\right)\right]\sin {}^j\beta \tag{4.56}$$

$$f_{2y}(\bar{x},\bar{y},{}^j\beta) = - Q\left[\frac{q_1}{\gamma_1}\left(\Theta_1(\gamma_1) - \Theta_2(\gamma_1)\right) - \frac{q_2}{\gamma_2}\left(\Theta_1(\gamma_2) - \Theta_2(\gamma_2)\right)\right]\cos {}^j\beta$$

$$- \frac{Q}{\gamma_1\gamma_2} D_{\bar{x}}\left[\ln\left(r_1(\gamma_1)/r_2(\gamma_1)\right) - \ln\left(r_1(\gamma_2)/r_2(\gamma_2)\right)\right]\sin {}^j\beta \tag{4.57}$$

$$\begin{aligned} f_{3x}(\bar{x},\bar{y},{}^j\beta) = Q\Big[&S_1 c_{11}\cos^2 {}^j\beta - S_2 c_{11}\sin {}^j\beta \cos {}^j\beta \\ &- S_3 c_{12}\sin^2 {}^j\beta - S_4 c_{12}\sin {}^j\beta \cos {}^j\beta \\ &+ (R_{31} - R_{32})(c_{11} + c_{12}/\gamma_1\gamma_2)\sin {}^j\beta \cos {}^j\beta \\ &- (R_{41} - R_{42})(c_{11}\sin^2 {}^j\beta - c_{12}\cos^2 {}^j\beta/\gamma_1\gamma_2)\Big] \end{aligned} \tag{4.58}$$

$$f_{3y}(\bar{x},\bar{y},{}^j\beta) = -Q\Big[S_1c_{11}\sin{}^j\beta\cos{}^j\beta - S_2c_{11}\sin^2{}^j\beta + S_3c_{12}\sin{}^j\beta\cos{}^j\beta + S_4c_{12}\cos^2{}^j\beta - (R_{31}-R_{32})(c_{11}\cos^2{}^j\beta - c_{12}\sin^2{}^j\beta/\gamma_1\gamma_2) + (R_{41}-R_{42})(c_{11}+c_{12}/\gamma_1\gamma_2)\sin{}^j\beta\cos{}^j\beta\Big] \tag{4.59}$$

$$f_{4x}(\bar{x},\bar{y},{}^j\beta) = Q\Big[S_1c_{12}\cos^2{}^j\beta - S_2c_{12}\sin{}^j\beta\cos{}^j\beta - S_3c_{22}\sin^2{}^j\beta - S_4c_{22}\sin{}^j\beta\cos{}^j\beta + (R_{31}-R_{32})(c_{12}+c_{22}/\gamma_1\gamma_2)\sin{}^j\beta\cos{}^j\beta - (R_{41}-R_{42})(c_{12}\sin^2{}^j\beta - c_{22}\cos^2{}^j\beta/\gamma_1\gamma_2)\Big] \tag{4.60}$$

$$f_{4y}(\bar{x},\bar{y},{}^j\beta) = -Q\Big[S_1c_{12}\sin{}^j\beta\cos{}^j\beta - S_2c_{12}\sin^2{}^j\beta + S_3c_{22}\sin{}^j\beta\cos{}^j\beta + S_4c_{22}\cos^2{}^j\beta - (R_{31}-R_{32})(c_{12}\cos^2{}^j\beta - c_{22}\sin^2{}^j\beta/\gamma_1\gamma_2) + (R_{41}-R_{42})(c_{12}+c_{22}/\gamma_1\gamma_2)\sin{}^j\beta\cos{}^j\beta\Big] \tag{4.61}$$

$$f_{5x}(\bar{x},\bar{y},{}^j\beta) = Q\,c_{66}\Big[S_1\sin{}^j\beta\cos{}^j\beta + S_2\cos^2{}^j\beta - S_3\sin{}^j\beta\cos{}^j\beta + S_4\sin^2{}^j\beta + (R_{31}-R_{32})(\sin^2{}^j\beta + \cos^2{}^j\beta/\gamma_1\gamma_2) + (R_{41}-R_{42})(1-1/\gamma_1\gamma_2)\sin{}^j\beta\cos{}^j\beta\Big] \tag{4.62}$$

$$f_{5y}(\bar{x},\bar{y},{}^j\beta) = -Q\,c_{66}\Big[S_1\sin^2{}^j\beta + S_2\sin{}^j\beta\cos{}^j\beta + S_3\cos^2{}^j\beta - S_4\sin{}^j\beta\cos{}^j\beta - (R_{31}-R_{32})(1-1/\gamma_1\gamma_2)\sin{}^j\beta\cos{}^j\beta - (R_{41}-R_{42})(\cos^2{}^j\beta + \sin^2{}^j\beta/\gamma_1\gamma_2)\Big] \tag{4.63}$$

Recalling also from Chapter II the convention of computing element self-effects on the negative side of the discontinuity, determination of the values of coefficients

${}^{ii}B_{ss}$ and ${}^{ii}B_{nn}$ requires computing the following limits with $\bar{x} = 0$:

$$\lim_{y \to 0_-} \left[\Theta_1(\gamma_i) - \Theta_2(\gamma_i)\right] = -\pi \tag{4.64}$$

$$\lim_{y \to 0_-} \left[\ln\left[r_1(\gamma_1)/r_2(\gamma_1)\right] - \ln\left[r_1(\gamma_2)/r_2(\gamma_2)\right]\right] = 0 \tag{4.65}$$

Thus,

$$\begin{aligned}
{}^{i}u_x^- &= Q\left[\frac{q_2}{\gamma_2}(-\pi) - \frac{q_1}{\gamma_1}(-\pi)\right]\left[{}^{i}D_{\bar{x}}\cos{}^{i}\beta - {}^{i}D_{\bar{y}}\sin{}^{i}\beta\right] \\
&= \frac{1}{2\pi}\frac{\gamma_1\gamma_2}{q_1\gamma_2 - q_2\gamma_1}\left[\frac{q_2}{\gamma_2} - \frac{q_1}{\gamma_1}\right](-\pi)\left[{}^{i}D_{\bar{x}}\cos{}^{i}\beta - {}^{i}D_{\bar{y}}\sin{}^{i}\beta\right] \\
&= -\frac{1}{2}\frac{q_2\gamma_1 - q_1\gamma_2}{q_1\gamma_2 - q_2\gamma_1}\left[{}^{i}D_{\bar{x}}\cos{}^{i}\beta - {}^{i}D_{\bar{y}}\sin{}^{i}\beta\right] \\
&= +\tfrac{1}{2}\left[{}^{i}D_{\bar{x}}\cos{}^{i}\beta - {}^{i}D_{\bar{y}}\sin{}^{i}\beta\right]
\end{aligned} \tag{4.66}$$

and

$$\begin{aligned}
{}^{i}u_y^- &= -Q\left[\frac{q_1}{\gamma_1}(-\pi) - \frac{q_2}{\gamma_2}(-\pi)\right]\left[{}^{i}D_{\bar{x}}\sin{}^{i}\beta + {}^{i}D_{\bar{y}}\cos{}^{i}\beta\right] \\
&= -\frac{1}{2\pi}\frac{\gamma_1\gamma_2}{q_1\gamma_2 - q_2\gamma_1}\left[\frac{q_1}{\gamma_1} - \frac{q_2}{\gamma_2}\right](-\pi)\left[{}^{i}D_{\bar{x}}\sin{}^{i}\beta + {}^{i}D_{\bar{y}}\cos{}^{i}\beta\right] \\
&= +\frac{1}{2}\frac{q_1\gamma_2 - q_2\gamma_1}{q_1\gamma_2 - q_2\gamma_1}\left[{}^{i}D_{\bar{x}}\sin{}^{i}\beta + {}^{i}D_{\bar{y}}\cos{}^{i}\beta\right] \\
&= +\tfrac{1}{2}\left[{}^{i}D_{\bar{x}}\sin{}^{i}\beta + {}^{i}D_{\bar{y}}\cos{}^{i}\beta\right]
\end{aligned} \tag{4.67}$$

Therefore, the local displacements become

$$
\begin{aligned}
{}^{i}u_s^- = {}^{i}u_{\bar{x}}^- &= {}^{i}u_x^- \cos {}^{i}\beta + {}^{i}u_y^- \sin {}^{i}\beta \\
&= + \tfrac{1}{2}(\cos^2 {}^{i}\beta + \sin^2 {}^{i}\beta)\,{}^{i}D_{\bar{x}} \\
&= + \tfrac{1}{2}\,{}^{i}D_s
\end{aligned}
\tag{4.68}
$$

$$
\begin{aligned}
{}^{i}u_n^- = {}^{i}u_{\bar{y}}^- &= - {}^{i}u_x^- \sin {}^{i}\beta + {}^{i}u_y^- \cos {}^{i}\beta \\
&= + \tfrac{1}{2}(\sin^2 {}^{i}\beta + \cos^2 {}^{i}\beta)\,{}^{i}D_{\bar{y}} \\
&= + \tfrac{1}{2}\,{}^{i}D_n
\end{aligned}
\tag{4.69}
$$

Thus, ${}^{ii}B_{ss} = {}^{ii}B_{nn} = + \frac{1}{2}$, as stated in Chapter II.

The required equations now exist for computer implementation of the Displacement Discontinuity Method for an orthotropic plate in a state of generalized plane stress (program TWODDO in Appendix D). This method may also be used to determine the solution for an isotropic plate in a state of generalized plane stress. Since the orthotropic solution is singular for a truly isotropic material ($E_x = E_y = E$ implies $q_1 = q_2 = 1$ and $\gamma_1 = \gamma_2$), it is not possible to use $E_x = E_y = E$ directly. However, if the values of E_x and E_y are within a few hundreths of a percent of one another, an isotropic material will be sufficiently represented.

B. Stress Analysis Application

To verify the stress solutions used in program TWODDO, the case of a circular hole in an infinite plate under uniaxial tension was again considered (Figure 4.2). Lekhnitskii (13:163-171) demonstrates that the tangential stress along the boundary of the hole is given by

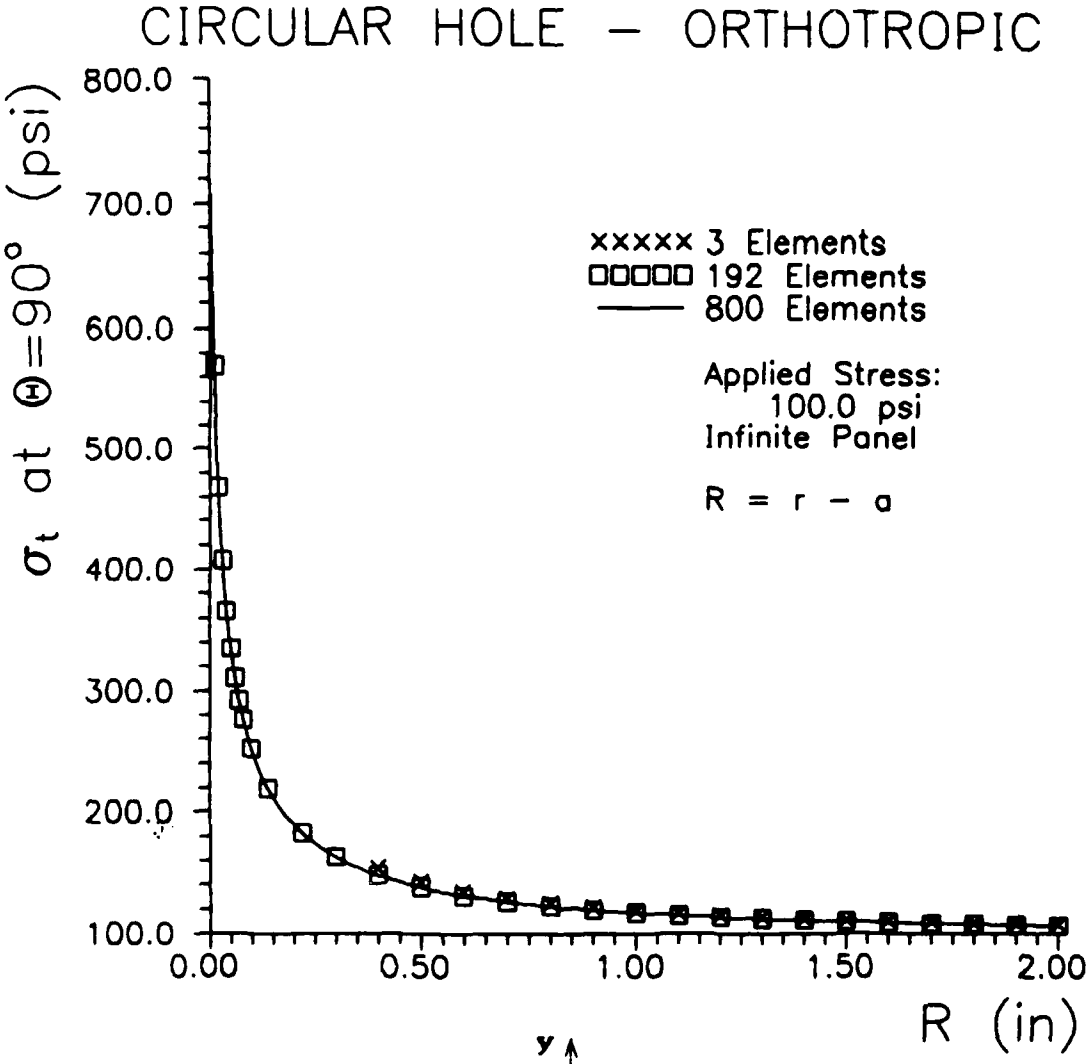

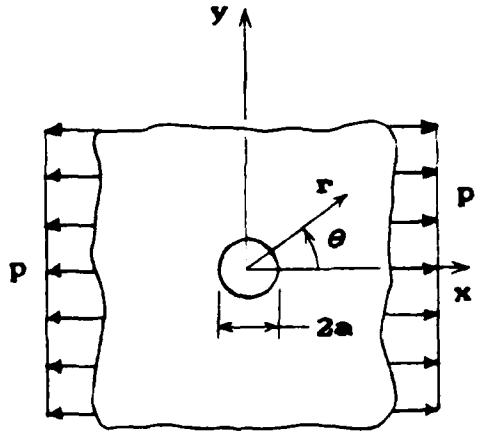

Figure 4.2. Circular Hole in an Infinite Plate under Uniaxial Tension (Orthotropic)

$$\sigma_t = p \frac{E_t}{E_1} \left[\mu_1\mu_2\cos^2\theta + (1 + n)\sin^2\theta\right] \tag{4.70}$$

where

$$\mu_1\mu_2 = -(E_1/E_2)^{1/2} \tag{4.71}$$

$$n = (E_1/G_{12} - 2\nu_{12} - 2\mu_1\mu_2)^{1/2} \tag{4.72}$$

and

$$\frac{1}{E_t} = \frac{\sin^4\theta}{E_1} + \left(\frac{1}{G_{12}} - \frac{2\nu_{12}}{E_1}\right)\sin^2\theta\ \cos^2\theta + \frac{\cos^4\theta}{E_2} \tag{4.73}$$

for a uniform traction p at infinity.

For the case $\theta = 90°$, the maximum stress is determined to be $\sigma_t = \sigma_x = p(1 + n)$. Then, assuming a boron/epoxy laminate ($E_1 = 30\times10^6$ psi, $E_2 = 2.7\times10^6$ psi, $G_{12} = 0.65\times10^6$ psi, and $\nu_{12} = 0.21$), the theoretical maximum stress at the edge of the hole is $\sigma_x = 823.9$ psi. The results from program TWODDO were extrapolated to the edge of the hole by assuming an inverse fourth-order least squares curve fit (1:264) is appropriate. The results are shown in Table 4.1.

Table 4.1. Tangential Stress at Edge of a Circular Hole (Orthotropic)

Elements	σ_t at θ=90°	% Error
3	304.6	-63.0
12	400.9	-51.3
48	482.6	-41.4
96	523.8	-36.4
800	690.0	-16.3

The extrapolated stress at the boundary converges very slowly due to the presence of stress singularities at the ends of each element. The difference in stress values a short distance from the boundary, however, is less than 2% when the 3-element case is compared to the 800-element case. Thus, the stress solution is accurate except very close to a boundary element.

C. Fracture Mechanics Applications

Two of the fracture mechanics problems analyzed for an isotropic material were considered again for an orthotropic material: (i) slanted embedded crack (45° angle), and (ii) single edge crack near a hole. Analyzed first was the case of symmetric edge cracks emanating from a hole.

1. Symmetric Edge Cracks Emanating from a Hole. This first fracture mechanics problem involves cracks extending from two sides of a circular hole in an orthotropic panel (Figure 4.3). The solution to this problem is presented by Tan and Bigelow (23) as

$$K_I = S \sqrt{\pi a} F \tag{4.74}$$

where F is a correction factor based upon the geometry and the material properties.

The case analyzed was a [0°] graphite/epoxy laminate having the following properties and configuration:

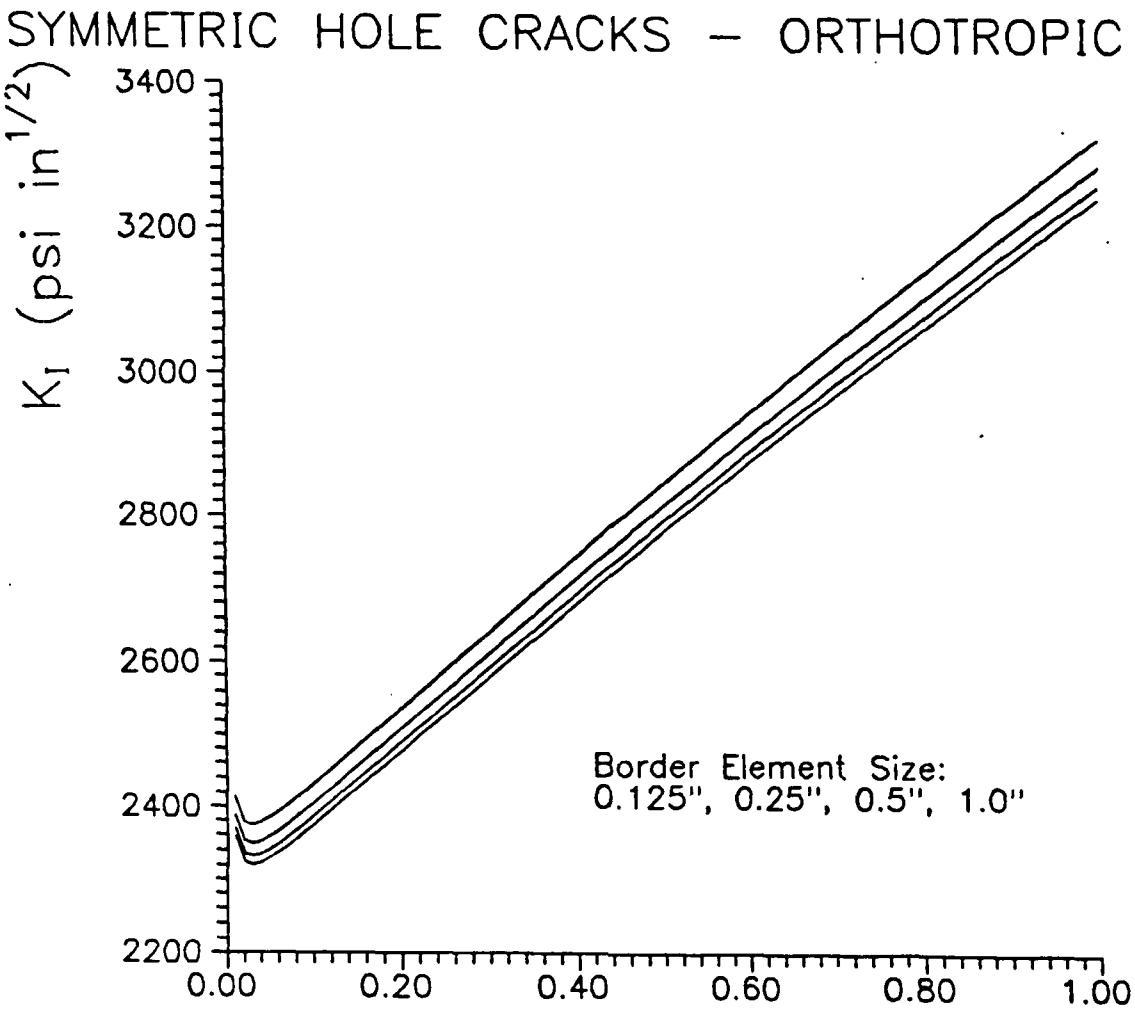

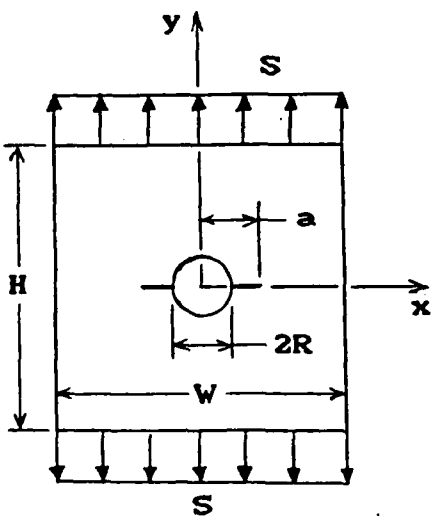

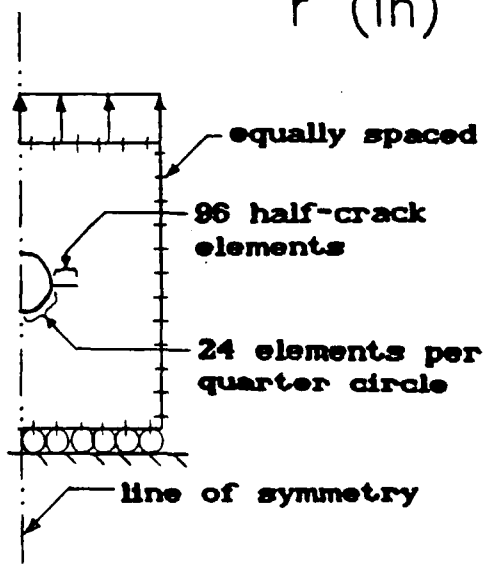

Figure 4.3. Symmetric Edge Cracks Emanating from a Hole (Orthotropic)

$$E_x = 11.72 \text{ GPa} = 1.70\times10^6 \text{ psi}$$

$$E_y = 144.8 \text{ GPa} = 21.0\times10^6 \text{ psi}$$

$$G_{xy} = 9.65 \text{ GPa} = 1.40\times10^6 \text{ psi}$$

$$\nu_{xy} = 0.017 \qquad S = 1000 \text{ psi}$$

$$a = 1.60 \text{ in} \qquad 2a/W = 0.20 \qquad 2R/W = 0.125 \qquad H/W = 2.00$$

For these conditions, Tan and Bigelow (23) predict a stress intensity factor of $K_I = 2394$ psi in$^{1/2}$ ($F = 1.0679$). Program TWODDO produced the results in Table 4.2 for 96 half-crack elements.

Table 4.2. Symmetric Edge Cracks Emanating from a Hole (Orthotropic)

Length	K_I	% Error
1.00	2327	-2.8
0.50	2302	-3.8
0.25	2285	-4.6
0.125	2274	-5.0

2. <u>Slanted Embedded Crack (45° Angle)</u>. The geometry for this problem is similar to that for the isotropic case (Figure 4.4). The material properties used, however, were

$$E_x = 30\times10^6 \text{ psi} \qquad G_{xy} = 0.65\times10^6 \text{ psi}$$

$$E_y = 2.7\times10^6 \text{ psi} \qquad \nu_{xy} = 0.21$$

which corresponds to a boron/epoxy laminate. Using a finite element alternating method, Chen and Atluri (4) determined the Mode II stress intensity factor for the loading shown in

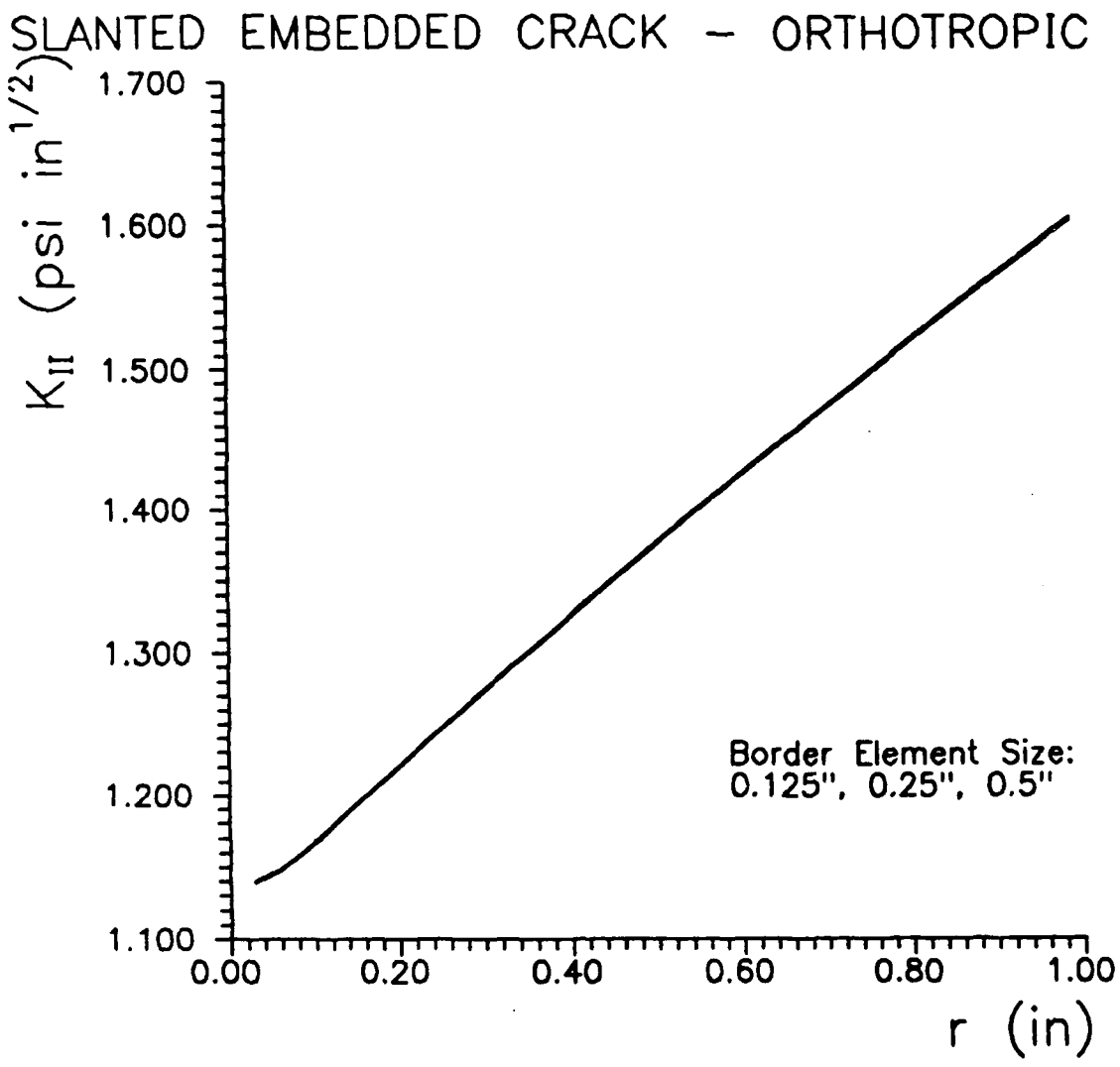

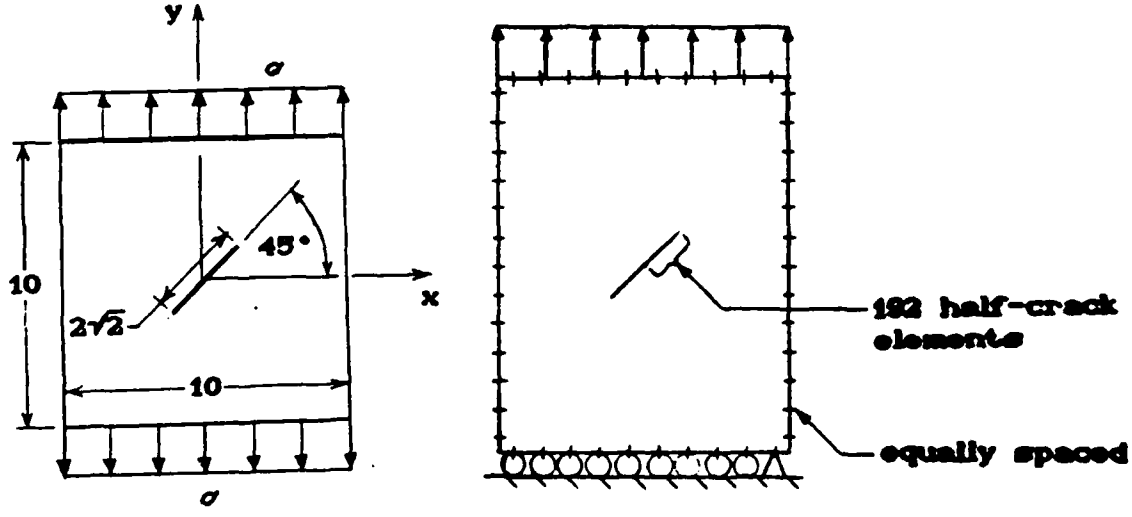

Figure 4.4. Slanted Embedded Crack (Orthotropic)

Figure 4.4 to be K_{II} = 1.1097 psi $in^{1/2}$. The results obtained from program TWODDO are compared to this in Table 4.3 for 192 half-crack elements.

Table 4.3. Slanted Embedded Crack (Orthotropic)

Length	K_{II}	% Error
0.50	1.116	+0.6
0.25	1.116	+0.6
0.125	1.116	+0.6

3. Single Edge Crack Near a Hole. Here, the same geometry was used for the orthotropic case as was used for the isotropic case (Figure 4.5). The material considered was a [0°] layup of graphite/epoxy with the following properties:

$$E_x = 20.5\times10^6 \text{ psi} \qquad G_{xy} = 0.752\times10^6 \text{ psi}$$

$$E_y = 1.37\times10^6 \text{ psi} \qquad \nu_{xy} = 0.31$$

For this problem, Chen and Atluri (4) obtained K_I = 3.2349 psi $in^{1/2}$ with a 1 psi load. For an applied stress of 1000 psi,

$$K_I = 3235 \text{ psi in}^{1/2} \tag{4.75}$$

The results from program TWODDO presented in Table 4.4 indicate slower convergence than for the more compact problems analyzed earlier. However, the trend of overestimating the

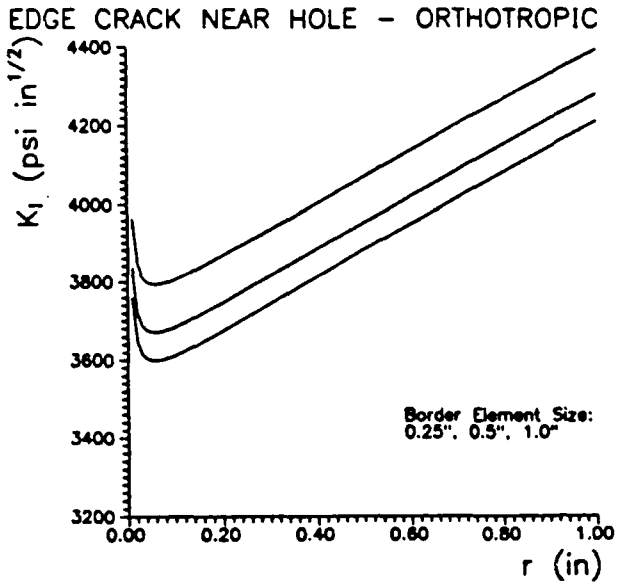

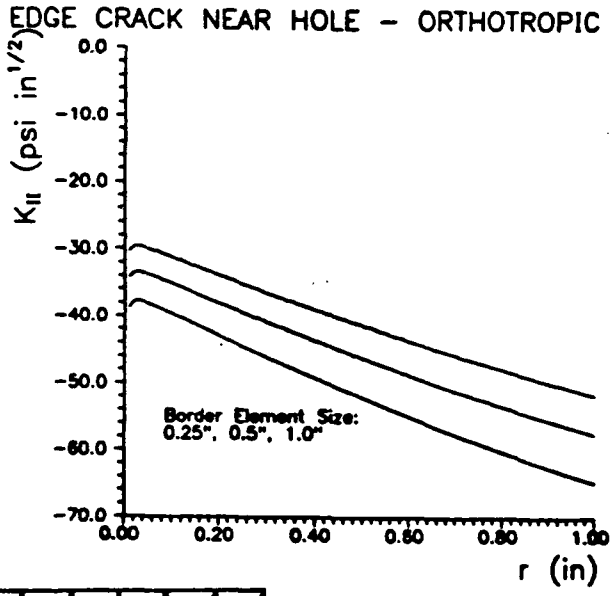

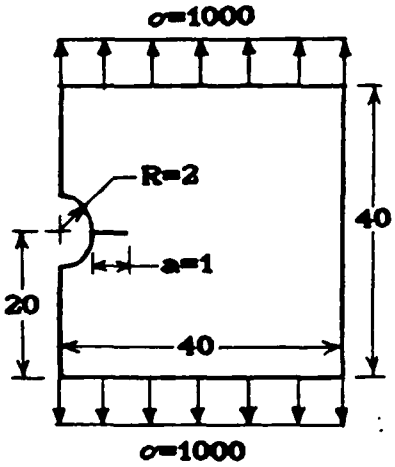

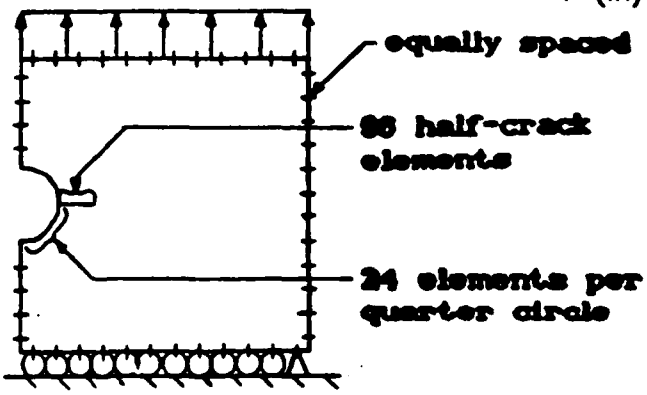

Figure 4.5. Single Edge Crack Near a Hole (Orthotropic)

stress intensity factor is evident by the monotonic convergence of the results.

Table 4.4. Single Edge Crack Near a Hole (Orthotropic)

Length	K_I	% Error
1.00	3734	+15.4
0.50	3610	+11.6
0.25	3540	+9.4

V. Conclusions and Recommendations

A. Conclusions

As demonstrated by the results in this study, the Displacement Discontinuity Method may be used as a tool for both stress analysis and fracture mechanics applications. Its rapid convergence for problems involving infinite domains allows for an accurate solution with only a few elements, as demonstrated by both stress analysis applications and by the case of parallel offset cracks in an isotropic material. The method's accuracy in problems with boundaries composed of straight line segments is also unquestioned. (See the slanted embedded crack results.) On the other hand, for fracture mechanics problems containing curved boundaries the DDM showed much slower convergence than it did in the other cases discussed above.

The Displacement Discontinuity Method has an advantage over finite element techniques due to the fact that only the boundary of the problem must be modeled versus modeling the entire domain. This, coupled with its rapid convergence, allows the DDM to obtain accurate solutions using fewer elements than finite element methods. Mesh refinement is also accomplished more easily with the DDM because of the reduction in order of the problem from a two-dimensional domain to a one-dimensional boundary.

The main disadvantage of the Displacement Discontinuity Method is that the matrix equation developed by the technique contains a fully-populated matrix. Finite element techniques are able to use banded matrix operations to increase their efficiency; the DDM cannot.

B. Recommendations

This thesis dealt mostly with development and validation of a plane stress displacement discontinuity method. Further research should be done to characterize the technique. This characterization could include (i) determining the range over which a least squares fit is appropriate (as a function of distance from the crack tip), (ii) obtaining a rough estimate of the number of elements required to obtain an accurate solution for a given problem, and (iii) determining the effect of refining the mesh for a half-crack in another manner (e.g. the method used by Harris (11) for the plane strain DDM).

Another recommendation is to improve the efficiency of Program TWODDO. This could be accomplished by using a matrix equation solution routine other than Gaussian elimination, which is of order N^3. Since the program is modular, incorporating a different matrix-solving algorithm should not be difficult.

Also, the current Displacement Discontinuity Method is limited to two-dimensional analyses. Extension of the DDM

to three dimensions may be possible if a 3-Dimensional Fictitious Stress Method could be developed.

Appendix A: Orthotropic Solution

1. Introduction

This appendix demonstrates that the orthotropic solution used in the body of this thesis satisfies (i) the boundary conditions appropriate for a displacement discontinuity and (ii) the equations of equilibrium for a panel subjected to a state of generalized plane stress.

The first of these requirements (satisfying the boundary conditions for a displacement discontinuity) can be written in the following form:

$$\lim_{y\to 0_-} u_i - \lim_{y\to 0_+} u_i = u_i^- - u_i^+ = D_i \quad |x| < a \tag{A.1}$$

where i = x, y. This represents a discontinuity in the displacement field along a line crack lying on the x-axis between x = - a and x = + a. This discontinuity can be either a shear discontinuity (i = x) or a normal discontinuity (i = y).

The second condition requires that the stresses satisfy the equations of equilibrium:

$$\sigma_{xx,x} + \tau_{xy,y} = 0 \qquad (\text{ x-direction }) \tag{A.2}$$

$$\sigma_{yy,y} + \tau_{xy,x} = 0 \qquad (\text{ y-direction }) \tag{A.3}$$

These equations are appropriate for a thin panel in which body forces and through-the-thickness shear are neglected.

The orthotropic solution presented is shown to be correct as follows: First, the solution for a shear displacement discontinuity is demonstrated to be correct. Next, the solution for a normal displacement discontinuity is validated. The two results are then combined to yield a more general solution. This solution is then generalized further to determine the displacement field for an arbitrary orientation of the crack with respect to the material coordinate system. Finally, the stresses for this general solution are determined.

2. Shear Displacement Discontinuity

Let u_x represent displacement in the x-direction and let u_y represent displacement in the y-direction. Consider the following displacement field:

$$u_x = Q\, D_x \left\{ \frac{q_2}{\gamma_2} \left[\arctan\left(\frac{y/\gamma_1}{x-a}\right) - \arctan\left(\frac{y/\gamma_1}{x+a}\right) \right] - \frac{q_1}{\gamma_1} \left[\arctan\left(\frac{y/\gamma_2}{x-a}\right) - \arctan\left(\frac{y/\gamma_2}{x+a}\right) \right] \right\} \tag{A.4}$$

$$u_y = \frac{Q}{\gamma_1 \gamma_2} D_x \left\{ \ln\left[\frac{(x-a)^2 + (y/\gamma_1)^2}{(x+a)^2 + (y/\gamma_1)^2} \right]^{1/2} - \ln\left[\frac{(x-a)^2 + (y/\gamma_2)^2}{(x+a)^2 + (y/\gamma_2)^2} \right]^{1/2} \right\} \tag{A.5}$$

with

$$Q = \frac{1}{2\pi} \frac{\gamma_1 \gamma_2}{q_1 \gamma_2 - q_2 \gamma_1}$$

$$q_1 = (c_{11}\gamma_1^2 - c_{66})/(c_{12} + c_{66})$$

$$q_2 = (c_{11}\gamma_2^2 - c_{66})/(c_{12} + c_{66})$$

$$c_{11}c_{66}\gamma_i^4 + [c_{12}(c_{12} + 2c_{66}) - c_{11}c_{22}]\gamma_i^2 + c_{22}c_{66} = 0$$

and

$$D_x = \text{constant}$$

Then, on the x-axis

$$u_x = Q\, D_x \left\{ \frac{q_2}{\gamma_2} \lim_{y \to 0} \left[\arctan\left(\frac{y/\gamma_1}{x - a}\right) - \arctan\left(\frac{y/\gamma_1}{x + a}\right) \right] - \frac{q_1}{\gamma_1} \lim_{y \to 0} \left[\arctan\left(\frac{y/\gamma_2}{x - a}\right) - \arctan\left(\frac{y/\gamma_2}{x + a}\right) \right] \right\} \tag{A.6}$$

$$u_y = 0 \tag{A.7}$$

The limits depend upon the value of x and upon from which direction y = 0 is approached. The limits of the arctangent function are

$$\lim_{y \to 0} \arctan\left(\frac{y}{x \pm a}\right) = 0 \qquad \text{for } |x| > a \tag{A.8}$$

$$\lim_{y \to 0_+} \arctan\left(\frac{y}{x \pm a}\right) = \pi \qquad \text{for } |x| < a \tag{A.9}$$

$$\lim_{y \to 0_-} \arctan\left(\frac{y}{x \pm a}\right) = -\pi \qquad \text{for } |x| < a \tag{A.10}$$

This means $u_x = 0$ on $|x| > a$. If $|x| < a$,

$$u_x = \begin{cases} Q\ D_x \left\{ \dfrac{q_2}{\gamma_2}(\pi) - \dfrac{q_1}{\gamma_1}(\pi) \right\} & \text{for } y \to 0_+ \\ Q\ D_x \left\{ \dfrac{q_2}{\gamma_2}(-\pi) - \dfrac{q_1}{\gamma_1}(-\pi) \right\} & \text{for } y \to 0_- \end{cases}$$

$$u_x = \begin{cases} Q\ D_x \pi \left\{ \dfrac{q_2}{\gamma_2} - \dfrac{q_1}{\gamma_1} \right\} & \text{for } y \to 0_+ \\ -\ Q\ D_x \pi \left\{ \dfrac{q_2}{\gamma_2} - \dfrac{q_1}{\gamma_1} \right\} & \text{for } y \to 0_- \end{cases}$$

$$u_x = \begin{cases} Q\ D_x \pi \left\{ \dfrac{q_2\gamma_1 - q_1\gamma_2}{\gamma_1\gamma_2} \right\} & \text{for } y \to 0_+ \\ -\ Q\ D_x \pi \left\{ \dfrac{q_2\gamma_1 - q_1\gamma_2}{\gamma_1\gamma_2} \right\} & \text{for } y \to 0_- \end{cases}$$

$$u_x = \begin{cases} -\ \frac{1}{2} D_x & \text{for } y \to 0_+ \\ +\ \frac{1}{2} D_x & \text{for } y \to 0_- \end{cases} \tag{A.11}$$

Thus, u_x and u_y satisfy the displacement discontinuity boundary conditions

$$u_x^- - u_x^+ = D_x \qquad \text{on } |x| < a,\ y = 0 \tag{A.12}$$

$$u_x^- - u_x^+ = 0 \qquad \text{on } |x| > a,\ y = 0 \tag{A.13}$$

The displacements u_x and u_y must also satisfy the equilibrium equations:

$$\sigma_{xx,x} + \tau_{xy,y} = 0 \qquad (\text{ x-direction }) \tag{A.2}$$

$$\sigma_{yy,y} + \tau_{xy,x} = 0 \qquad (\text{ y-direction }) \tag{A.3}$$

which, when combined with the stress-strain relationships,

$$\begin{Bmatrix} \sigma_{xx} \\ \sigma_{yy} \\ \tau_{xy} \end{Bmatrix} = \begin{bmatrix} c_{11} & c_{12} & 0 \\ c_{12} & c_{22} & 0 \\ 0 & 0 & c_{66} \end{bmatrix} \begin{Bmatrix} u_{x,x} \\ u_{y,y} \\ u_{x,y} + u_{y,x} \end{Bmatrix} \tag{A.14}$$

may be written

$$c_{11} u_{x,xx} + c_{66} u_{x,yy} + (c_{12} + c_{66})\, u_{y,xy} = 0 \qquad (\text{ x }) \tag{A.15}$$

$$c_{22} u_{y,yy} + c_{66} u_{y,xx} + (c_{12} + c_{66})\, u_{x,xy} = 0 \qquad (\text{ y }) \tag{A.16}$$

Carrying out the differentiation in the x-equilibrium equation,

$$\begin{aligned}
& c_{11} u_{x,xx} + c_{66} u_{x,yy} + (c_{12} + c_{66})\, u_{y,xy} \\
& = c_{11} Q\, D_x \frac{q_2}{\gamma_2} \left[\frac{2(x-a)(y/\gamma_1)}{[(x-a)^2 + (y/\gamma_1)^2]^2} - \frac{2(x+a)(y/\gamma_1)}{[(x+a)^2 + (y/\gamma_1)^2]^2} \right] \\
& + c_{11} Q\, D_x \frac{q_1}{\gamma_1} \left[\frac{2(x-a)(y/\gamma_2)}{[(x-a)^2 + (y/\gamma_2)^2]^2} - \frac{2(x+a)(y/\gamma_2)}{[(x+a)^2 + (y/\gamma_2)^2]^2} \right] \\
& + c_{66} Q\, D_x \frac{q_2}{\gamma_2} \left[\frac{-2(x-a)(y/\gamma_1)/\gamma_1^2}{[(x-a)^2 + (y/\gamma_1)^2]^2} - \frac{-2(x+a)(y/\gamma_1)/\gamma_1^2}{[(x+a)^2 + (y/\gamma_1)^2]^2} \right]
\end{aligned}$$

$$+ c_{66} Q\, D_x \frac{q_1}{\gamma_1} \left[\frac{-2(x-a)(y/\gamma_2)/\gamma_2^2}{[(x-a)^2 + (y/\gamma_2)^2]^2} - \frac{-2(x+a)(y/\gamma_2)/\gamma_2^2}{[(x+a)^2 + (y/\gamma_2)^2]^2} \right]$$

$$+ (c_{12} + c_{66}) \frac{Q}{\gamma_1 \gamma_2} D_x \left[\frac{-2(x-a)(y/\gamma_1)/\gamma_1}{[(x-a)^2 + (y/\gamma_1)^2]^2} - \frac{-2(x+a)(y/\gamma_1)/\gamma_1}{[(x+a)^2 + (y/\gamma_1)^2]^2} \right]$$

$$+ (c_{12} + c_{66}) \frac{Q}{\gamma_1 \gamma_2} D_x \left[\frac{-2(x-a)(y/\gamma_2)/\gamma_2}{[(x-a)^2 + (y/\gamma_2)^2]^2} - \frac{-2(x+a)(y/\gamma_2)/\gamma_2}{[(x+a)^2 + (y/\gamma_2)^2]^2} \right]$$

$$= \left[\frac{2(x-a)(y/\gamma_1)}{[(x-a)^2 + (y/\gamma_1)^2]^2} \right] \left\{ c_{11} Q\, D_x \frac{q_2}{\gamma_2} - c_{66} Q\, D_x \frac{q_2}{\gamma_1^2 \gamma_2} - (c_{12} + c_{66}) \frac{Q}{\gamma_1^2 \gamma_2} D_x \right\}$$

$$- \left[\frac{2(x+a)(y/\gamma_1)}{[(x+a)^2 + (y/\gamma_1)^2]^2} \right] \left\{ c_{11} Q\, D_x \frac{q_2}{\gamma_2} - c_{66} Q\, D_x \frac{q_2}{\gamma_1^2 \gamma_2} - (c_{12} + c_{66}) \frac{Q}{\gamma_1^2 \gamma_2} D_x \right\}$$

$$+ \left[\frac{2(x-a)(y/\gamma_2)}{[(x-a)^2 + (y/\gamma_2)^2]^2} \right] \left\{ c_{11} Q\, D_x \frac{q_1}{\gamma_1} - c_{66} Q\, D_x \frac{q_1}{\gamma_1 \gamma_2^2} - (c_{12} + c_{66}) \frac{Q}{\gamma_1 \gamma_2^2} D_x \right\}$$

$$- \left[\frac{2(x + a)(y/\gamma_2)}{[(x + a)^2 + (y/\gamma_2)^2]^2}\right]\left\{c_{11} Q\ D_x \frac{q_1}{\gamma_1} - c_{66} Q\ D_x \frac{q_1}{\gamma_1\ \gamma_2^2} - (c_{12} + c_{66}) \frac{Q}{\gamma_1\ \gamma_2^2} D_x\right\}$$

$$= \left[\frac{2(x - a)(y/\gamma_1)}{[(x - a)^2 + (y/\gamma_1)^2]^2}\right] \frac{Q\ D_x}{\gamma_1^2\ \gamma_2} \left\{ q_2(c_{11}\gamma_1^2 - c_{66}) - (c_{12} + c_{66}) \right\}$$

$$- \left[\frac{2(x + a)(y/\gamma_1)}{[(x + a)^2 + (y/\gamma_1)^2]^2}\right] \frac{Q\ D_x}{\gamma_1^2\ \gamma_2} \left\{q_2(c_{11}\gamma_1^2 - c_{66}) - (c_{12} + c_{66}) \right\}$$

$$+ \left[\frac{2(x - a)(y/\gamma_2)}{[(x - a)^2 + (y/\gamma_2)^2]^2}\right] \frac{Q\ D_x}{\gamma_1\ \gamma_2^2} \left\{q_1(c_{11}\gamma_2^2 - c_{66}) - (c_{12} + c_{66}) \right\}$$

$$- \left[\frac{2(x + a)(y/\gamma_2)}{[(x + a)^2 + (y/\gamma_2)^2]^2}\right] \frac{Q\ D_x}{\gamma_1\ \gamma_2^2} \left\{q_1(c_{11}\gamma_2^2 - c_{66}) - (c_{12} + c_{66}) \right\} \qquad (A.17)$$

Now, if

$$q_1(c_{11}\gamma_2^2 - c_{66}) = c_{12} + c_{66} \qquad (A.18)$$

and if

$$q_2(c_{11}\gamma_1^2 - c_{66}) = c_{12} + c_{66} \qquad (A.19)$$

then each term in Eq (A.17) is zero and x-direction equilibrium is satisfied. Using the definitions of q_1 and q_2, it is seen that

$$q_1 = \frac{c_{12} + c_{66}}{c_{11}\gamma_2^2 - c_{66}} = \frac{1}{q_2} \tag{A.20}$$

and

$$q_2 = \frac{c_{12} + c_{66}}{c_{11}\gamma_1^2 - c_{66}} = \frac{1}{q_1} \tag{A.21}$$

or,

$$q_1 q_2 = 1 \tag{A.22}$$

If Eq (A.22) holds, then x-direction equilibrium is satisfied. The proof is given ir Appendix B (Theorem 1).

Carrying out the differentiation for the y-equilibrium equation,

$$c_{22} u_{y,yy} + c_{66} u_{y,xx} + (c_{12} + c_{66})\, u_{x,xy} =$$

$$\frac{c_{22} Q}{\gamma_1 \gamma_2} D_x \left[\frac{[(x - a)^2 - (y/\gamma_1)^2]/\gamma_1^2}{[(x - a)^2 + (y/\gamma_1)^2]^2} \right.$$

$$- \frac{[(x + a)^2 - (y/\gamma_1)^2]/\gamma_1^2}{[(x + a)^2 + (y/\gamma_1)^2]^2} - \frac{[(x - a)^2 - (y/\gamma_2)^2]/\gamma_2^2}{[(x - a)^2 + (y/\gamma_2)^2]^2}$$

$$+ \frac{[(x + a)^2 - (y/\gamma_2)^2]/\gamma_2^2}{[(x + a)^2 + (y/\gamma_2)^2]^2} \Bigg]$$

$$+ \frac{c_{66} Q}{\gamma_1 \gamma_2} D_x \Bigg[- \frac{(x - a)^2 - (y/\gamma_1)^2}{[(x - a)^2 + (y/\gamma_1)^2]^2}$$

$$+ \frac{(x + a)^2 - (y/\gamma_1)^2}{[(x + a)^2 + (y/\gamma_1)^2]^2} + \frac{(x - a)^2 - (y/\gamma_2)^2}{[(x - a)^2 + (y/\gamma_2)^2]^2}$$

$$- \frac{(x + a)^2 - (y/\gamma_2)^2}{[(x + a)^2 + (y/\gamma_2)^2]^2} \Bigg]$$

$$+ (c_{12} + c_{66}) Q D_x \frac{q_2}{\gamma_2} \Bigg[- \frac{[(x - a)^2 - (y/\gamma_1)^2]/\gamma_1}{[(x - a)^2 + (y/\gamma_1)^2]^2}$$

$$+ \frac{[(x + a)^2 - (y/\gamma_1)^2]/\gamma_1}{[(x + a)^2 + (y/\gamma_1)^2]^2} \Bigg]$$

$$- (c_{12} + c_{66}) Q D_x \frac{q_1}{\gamma_1} \Bigg[- \frac{[(x - a)^2 - (y/\gamma_2)^2]/\gamma_2}{[(x - a)^2 + (y/\gamma_2)^2]^2}$$

$$+ \frac{[(x + a)^2 - (y/\gamma_2)^2]/\gamma_2}{[(x + a)^2 + (y/\gamma_2)^2]^2} \Bigg]$$

$$= \frac{Q\,D_x}{\gamma_1\gamma_2}\left[\frac{(x-a)^2-(y/\gamma_1)^2}{[(x-a)^2+(y/\gamma_1)^2]^2}\right]\left\{\frac{c_{22}}{\gamma_1^2}-c_{66}-(c_{12}+c_{66})q_2\right\}$$

$$-\frac{Q\,D_x}{\gamma_1\gamma_2}\left[\frac{(x+a)^2-(y/\gamma_1)^2}{[(x+a)^2+(y/\gamma_1)^2]^2}\right]\left\{\frac{c_{22}}{\gamma_1^2}-c_{66}-(c_{12}+c_{66})q_2\right\}$$

$$-\frac{Q\,D_x}{\gamma_1\gamma_2}\left[\frac{(x-a)^2-(y/\gamma_2)^2}{[(x-a)^2+(y/\gamma_2)^2]^2}\right]\left\{\frac{c_{22}}{\gamma_2^2}-c_{66}-(c_{12}+c_{66})q_1\right\}$$

$$+\frac{Q\,D_x}{\gamma_1\gamma_2}\left[\frac{(x-a)^2-(y/\gamma_2)^2}{[(x-a)^2+(y/\gamma_2)^2]^2}\right]\left\{\frac{c_{22}}{\gamma_2^2}-c_{66}\right.$$

$$\left.-(c_{12}+c_{66})q_1\right\} \qquad \text{(A.23)}$$

Equilibrium in the y-direction is satisfied if

$$\frac{c_{22}}{\gamma_1^2}-c_{66}-(c_{12}+c_{66})q_2=0 \qquad \text{(A.24)}$$

and

$$\frac{c_{22}}{\gamma_2^2}-c_{66}-(c_{12}+c_{66})q_1=0 \qquad \text{(A.25)}$$

because each term in the equilibrium equation (Eq (A.23)) is then identically zero.

Recalling the definitions of q_1 and q_2, and realizing that $q_1q_2 = 1$,

$$\frac{c_{22}}{\gamma_1^2} - c_{66} - (c_{12} + c_{66})q_2 = \frac{c_{22}}{\gamma_1^2} - c_{66} - \frac{(c_{12} + c_{66})}{q_1}$$

$$= \frac{c_{22}}{\gamma_1^2} - c_{66} - \frac{(c_{12} + c_{66})^2}{c_{11}\gamma_1^2 - c_{66}} = \frac{c_{22} - c_{66}\gamma_1^2}{\gamma_1^2} - \frac{(c_{12} + c_{66})^2}{c_{11}\gamma_1^2 - c_{66}}$$

$$= \frac{(c_{22} - c_{66}\gamma_1^2)(c_{11}\gamma_1^2 - c_{66}) - \gamma_1^2(c_{12} + c_{66})^2}{\gamma_1^2(c_{11}\gamma_1^2 - c_{66})}$$

$$= \frac{- c_{11}c_{66}\gamma_1^4 + (- c_{11}c_{22} - c_{12}^2 - 2c_{12}c_{66})\gamma_1^2 - c_{22}c_{66}}{\gamma_1^2(c_{11}\gamma_1^2 - c_{66})}$$

$$= - \frac{c_{11}c_{66}\gamma_1^4 + [c_{11}c_{22} + c_{12}(c_{12} + 2c_{66})]\gamma_1^2 + c_{22}c_{66}}{\gamma_1^2(c_{11}\gamma_1^2 - c_{66})} \qquad \text{(A.26)}$$

and

$$\frac{c_{22}}{\gamma_2^2} - c_{66} - (c_{12} + c_{66})q_1 = \frac{c_{22}}{\gamma_2^2} - c_{66} - \frac{(c_{12} + c_{66})}{q_2}$$

$$= \frac{c_{22}}{\gamma_2^2} - c_{66} - \frac{(c_{12} + c_{66})^2}{c_{11}\gamma_2^2 - c_{66}} = \frac{c_{22} - c_{66}\gamma_2^2}{\gamma_2^2} - \frac{(c_{12} + c_{66})^2}{c_{11}\gamma_2^2 - c_{66}}$$

$$= \frac{(c_{22} - c_{66}\gamma_2^2)(c_{11}\gamma_2^2 - c_{66}) - \gamma_2^2(c_{12} + c_{66})^2}{\gamma_2^2(c_{11}\gamma_2^2 - c_{66})}$$

$$= \frac{- c_{11}c_{66}\gamma_2^4 + (c_{11}c_{22} - c_{12}^2 - 2c_{12}c_{66})\gamma_2^2 - c_{22}c_{66}}{\gamma_2^2(c_{11}\gamma_2^2 - c_{66})}$$

$$= - \frac{c_{11}c_{66}\gamma_2^4 + [c_{12}(c_{12} + 2c_{66}) - c_{11}c_{22}]\gamma_2^2 + c_{22}c_{66}}{\gamma_2^2(c_{11}\gamma_2^2 - c_{66})} \tag{A.27}$$

Thus, y-direction equilibrium is satisfied if

$$c_{11}c_{66}\gamma_i^4 + [c_{12}(c_{12}+2c_{66}) - c_{11}c_{22}]\gamma_i^2 + c_{22}c_{66} = 0 \tag{A.28}$$

which is the characteristic equation.

3. <u>Normal Displacement Discontinuity</u>

Again, let u_x represent displacement in the x-direction and let u_y represent displacement in the y-direction. Now consider a displacement field defined by

$$u_x = Q\ D_y \left\{ \ln\left[\frac{(x - a)^2 + (y/\gamma_1)^2}{(x + a)^2 + (y/\gamma_1)^2}\right]^{1/2} - \ln\left[\frac{(x - a)^2 + (y/\gamma_2)^2}{(x + a)^2 + (y/\gamma_2)^2}\right]^{1/2} \right\} \tag{A.29}$$

$$u_y = - Q\ D_y \left\{ \frac{q_1}{\gamma_1}\left[\arctan\left(\frac{y/\gamma_1}{x - a}\right) - \arctan\left(\frac{y/\gamma_1}{x + a}\right)\right] - \frac{q_2}{\gamma_2}\left[\arctan\left(\frac{y/\gamma_2}{x - a}\right) - \arctan\left(\frac{y/\gamma_2}{x + a}\right)\right]\right\} \tag{A.30}$$

with D_y = constant, and all other variables defined as in the shear displacement discontinuity solution.

Following the procedure above, for $|x| > a$, $u_x = u_y = 0$. For $|x| < a$, $u_x = 0$ and

$$u_y = -Q\,D_y \left\{ \frac{q_1}{\gamma_1} \lim_{y\to 0} \left[\arctan\left(\frac{y/\gamma_1}{x-a}\right) - \arctan\left(\frac{y/\gamma_1}{x+a}\right)\right] \right.$$

$$\left. - \frac{q_2}{\gamma_2} \lim_{y\to 0} \left[\arctan\left(\frac{y/\gamma_2}{x-a}\right) - \arctan\left(\frac{y/\gamma_2}{x+a}\right)\right]\right\} \qquad \text{(A.31)}$$

The limits depend upon from which direction y = 0 is approached.

$$u_y = \begin{cases} -Q\,D_y \left\{ \frac{q_1}{\gamma_1}(\pi) - \frac{q_2}{\gamma_2}(\pi) \right\} & \text{for } y\to 0_+ \\ -Q\,D_y \left\{ \frac{q_1}{\gamma_1}(-\pi) - \frac{q_2}{\gamma_2}(-\pi) \right\} & \text{for } y\to 0_- \end{cases}$$

$$u_y = \begin{cases} -Q\,D_y\pi \left\{ \frac{q_1}{\gamma_1} - \frac{q_2}{\gamma_2} \right\} & \text{for } y\to 0_+ \\ Q\,D_y\pi \left\{ \frac{q_1}{\gamma_1} - \frac{q_2}{\gamma_2} \right\} & \text{for } y\to 0_- \end{cases}$$

$$u_y = \begin{cases} -Q\,D_y\pi \left\{ \frac{q_1\gamma_2 - q_2\gamma_1}{\gamma_1\gamma_2} \right\} & \text{for } y\to 0_+ \\ Q\,D_y\pi \left\{ \frac{q_1\gamma_2 - q_2\gamma_1}{\gamma_1\gamma_2} \right\} & \text{for } y\to 0_- \end{cases}$$

$$u_y = \begin{cases} -\frac{1}{2}D_y & \text{for } y\to 0_+ \\ +\frac{1}{2}D_y & \text{for } y\to 0_- \end{cases} \qquad \text{(A.32)}$$

Thus, u_x and u_y satisfy the displacement discontinuity boundary conditions

$$u_y^- - u_y^+ = D_y \qquad \text{on } |x| < a,\ y = 0 \tag{A.33}$$

$$u_y^- - u_y^+ = 0 \qquad \text{on } |x| > a,\ y = 0 \tag{A.34}$$

The displacements u_x and u_y must also satisfy the equilibrium equations:

$$c_{11} u_{x,xx} + c_{66} u_{x,yy} + (c_{12} + c_{66})\, u_{y,xy} = 0 \qquad (\ x\ ) \tag{A.15}$$

$$c_{22} u_{y,yy} + c_{66} u_{y,xx} + (c_{12} + c_{66})\, u_{x,xy} = 0 \qquad (\ y\ ) \tag{A.16}$$

Carrying out the differentiation in the x-equilibrium equation (Eq (A.15)),

$$c_{11} u_{x,xx} + c_{66} u_{x,yy} + (c_{12} + c_{66})\, u_{y,xy} =$$

$$c_{11} Q\, D_y \left[- \frac{(x - a)^2 - (y/\gamma_1)^2}{[(x - a)^2 + (y/\gamma_1)^2]^2} + \frac{(x + a)^2 - (y/\gamma_1)^2}{[(x + a)^2 + (y/\gamma_1)^2]^2} + \frac{(x - a)^2 - (y/\gamma_2)^2}{[(x - a)^2 + (y/\gamma_2)^2]^2} - \frac{(x + a)^2 - (y/\gamma_2)^2}{[(x + a)^2 + (y/\gamma_2)^2]^2} \right]$$

$$+ c_{66} Q\, D_y \left[\frac{[(x - a)^2 - (y/\gamma_1)^2]/\gamma_1^2}{[(x - a)^2 + (y/\gamma_1)^2]^2} \right.$$

$$- \frac{[(x + a)^2 - (y/\gamma_1)^2]/\gamma_1^2}{[(x + a)^2 + (y/\gamma_1)^2]^2} - \frac{[(x - a)^2 - (y/\gamma_2)^2]/\gamma_2^2}{[(x - a)^2 + (y/\gamma_2)^2]^2}$$

$$+ \frac{[(x + a)^2 - (y/\gamma_2)^2]/\gamma_2^2}{[(x + a)^2 + (y/\gamma_2)^2]^2}\Bigg]$$

$$- (c_{12} + c_{66})\, Q\, D_y \frac{q_1}{\gamma_1}\Bigg[- \frac{[(x - a)^2 - (y/\gamma_1)^2]/\gamma_1}{[(x - a)^2 + (y/\gamma_1)^2]^2}$$

$$+ \frac{[(x + a)^2 - (y/\gamma_1)^2]/\gamma_1}{[(x + a)^2 + (y/\gamma_1)^2]^2}\Bigg]$$

$$+ (c_{12} + c_{66})\, Q\, D_y \frac{q_2}{\gamma_2}\Bigg[- \frac{[(x - a)^2 - (y/\gamma_2)^2]/\gamma_2}{[(x - a)^2 + (y/\gamma_2)^2]^2}$$

$$+ \frac{[(x + a)^2 - (y/\gamma_2)^2]/\gamma_2}{[(x + a)^2 + (y/\gamma_2)^2]^2}\Bigg]$$

$$= - Q\, D_y \left[\frac{(x - a)^2 - (y/\gamma_1)^2}{[(x - a)^2 + (y/\gamma_1)^2]^2}\right]\left\{c_{11} - \frac{c_{66}}{\gamma_1^2} - \frac{q_1}{\gamma_1^2}(c_{12} + c_{66})\right\}$$

$$+ Q\, D_y \left[\frac{(x + a)^2 - (y/\gamma_1)^2}{[(x + a)^2 + (y/\gamma_1)^2]^2}\right]\left\{c_{11} - \frac{c_{66}}{\gamma_1^2} - \frac{q_1}{\gamma_1^2}(c_{12} + c_{66})\right\}$$

$$+ Q\, D_y \left[\frac{(x - a)^2 - (y/\gamma_2)^2}{[(x - a)^2 + (y/\gamma_2)^2]^2}\right]\left\{c_{11} - \frac{c_{66}}{\gamma_2^2} - \frac{q_2}{\gamma_2^2}(c_{12} + c_{66})\right\}$$

$$- Q\, D_y \left[\frac{(x + a)^2 - (y/\gamma_2)^2}{[(x + a)^2 + (y/\gamma_2)^2]^2}\right]\left\{c_{11} - \frac{c_{66}}{\gamma_2^2} - \frac{q_2}{\gamma_2^2}(c_{12} + c_{66})\right\} \tag{A.35}$$

Note that each term is identically zero if

$$c_{11} - c_{66}/\gamma_1^2 - q_1(c_{12} + c_{66})/\gamma_1^2 = 0 \tag{A.36}$$

and

$$c_{11} - c_{66}/\gamma_2^2 - q_2(c_{12} + c_{66})/\gamma_2^2 = 0 \tag{A.37}$$

Recalling the definitions of q_1 and q_2,

$$c_{11} - c_{66}/\gamma_1^2 - q_1(c_{12} + c_{66})/\gamma_1^2 =$$

$$\frac{c_{11}\gamma_1^2 - c_{66}}{\gamma_1^2} - \frac{c_{11}\gamma_1^2 - c_{66}}{c_{12} + c_{66}} \frac{c_{12} + c_{66}}{\gamma_1^2} = 0 \tag{A.38}$$

and

$$c_{11} - c_{66}/\gamma_2^2 - q_2(c_{12} + c_{66})/\gamma_2^2 =$$

$$\frac{c_{11}\gamma_2^2 - c_{66}}{\gamma_2^2} - \frac{c_{11}\gamma_2^2 - c_{66}}{c_{12} + c_{66}} \frac{c_{12} + c_{66}}{\gamma_2^2} = 0 \tag{A.39}$$

Thus, each term in Eq (A.35) is zero, and x-direction equilibrium is satisfied.

Now, carrying out the differentiation for the y-equilibrium equation (Eq (A.16)),

$$c_{22}u_{y,yy} + c_{66}u_{y,xx} + (c_{12} + c_{66})\, u_{x,xy} =$$

$$- c_{22}\, Q\, D_y \frac{q_1}{\gamma_1} \left[- \frac{2(x - a)(y/\gamma_1)/\gamma_1^2}{[(x - a)^2 + (y/\gamma_1)^2]^2} \right.$$

$$+ \frac{2(x - a)(y/\gamma_1)/\gamma_1^2}{[(x - a)^2 + (y/\gamma_1)^2]^2}\Bigg]$$

$$+ c_{22}\ Q\ D_y \frac{q_2}{\gamma_2}\Bigg[- \frac{2(x - a)(y/\gamma_2)/\gamma_2^2}{[(x - a)^2 + (y/\gamma_2)^2]^2}$$

$$+ \frac{2(x - a)(y/\gamma_2)/\gamma_2^2}{[(x - a)^2 + (y/\gamma_2)^2]^2}\Bigg]$$

$$- c_{66}\ Q\ D_y \frac{q_1}{\gamma_1}\Bigg[\frac{2(x - a)(y/\gamma_1)}{[(x - a)^2 + (y/\gamma_1)^2]^2}$$

$$+ \frac{2(x - a)(y/\gamma_1)}{[(x - a)^2 + (y/\gamma_1)^2]^2}\Bigg]$$

$$+ c_{66}\ Q\ D_y \frac{q_2}{\gamma_2}\Bigg[\frac{2(x - a)(y/\gamma_2)}{[(x - a)^2 + (y/\gamma_2)^2]^2}$$

$$+ \frac{2(x - a)(y/\gamma_2)}{[(x - a)^2 + (y/\gamma_2)^2]^2}\Bigg]$$

$$+ (c_{12} + c_{66})\ Q\ D_y \frac{q_1}{\gamma_1}\Bigg[- \frac{2(x - a)(y/\gamma_1)/\gamma_1}{[(x - a)^2 + (y/\gamma_1)^2]^2}$$

$$+ \frac{2(x + a)(y/\gamma_1)/\gamma_1}{[(x + a)^2 + (y/\gamma_1)^2]^2} + \frac{2(x - a)(y/\gamma_2)/\gamma_2}{[(x - a)^2 + (y/\gamma_2)^2]^2}$$

$$- \frac{2(x + a)(y/\gamma_2)/\gamma_2}{[(x + a)^2 + (y/\gamma_2)^2]^2}\Bigg]$$

$$= Q\ D_y \left[\frac{2(x - a)(y/\gamma_1)/\gamma_1^3}{[(x - a)^2 + (y/\gamma_1)^2]^2}\right]\left\{c_{22}q_1 - c_{66}q_1\gamma_1^2 - (c_{12} + c_{66})\gamma_1^2\right\}$$

$$- Q\ D_y \left[\frac{2(x + a)(y/\gamma_1)/\gamma_1^3}{[(x + a)^2 + (y/\gamma_1)^2]^2}\right]\left\{c_{22}q_1 - c_{66}q_1\gamma_1^2 - (c_{12} + c_{66})\gamma_1^2\right\}$$

$$- Q\ D_y \left[\frac{2(x - a)(y/\gamma_2)/\gamma_2^3}{[(x - a)^2 + (y/\gamma_2)^2]^2}\right]\left\{c_{22}q_2 - c_{66}q_2\gamma_2^2 - (c_{12} + c_{66})\gamma_2^2\right\}$$

$$+ Q\ D_y \left[\frac{2(x + a)(y/\gamma_2)/\gamma_2^3}{[(x + a)^2 + (y/\gamma_2)^2]^2}\right]\left\{c_{22}q_2 - c_{66}q_2\gamma_2^2 - (c_{12} + c_{66})\gamma_2^2\right\} \qquad (A.40)$$

Equilibrium in the y-direction is satisfied if

$$c_{22}q_1 - c_{66}q_1\gamma_1^2 - (c_{12} + c_{66})\gamma_1^2 = 0 \qquad (A.41)$$

and

$$c_{22}q_2 - c_{66}q_2\gamma_2^2 - (c_{12} + c_{66})\gamma_2^2 = 0 \qquad (A.42)$$

since each term in the equilibrium equation (Eq (A.40) would then be zero. Recalling the definitions of q_1 and q_2,

$$c_{22}q_1 - c_{66}q_1\gamma_1^2 - (c_{12} + c_{66})\gamma_1^2 =$$

$$(c_{22} - c_{66}\gamma_1^2)q_1 - (c_{12} + c_{66})\gamma_1^2$$

$$= (c_{22} - c_{66}\gamma_1^2)\frac{c_{11}\gamma_1^2 - c_{66}}{c_{12} + c_{66}} - (c_{12} + c_{66})\gamma_1^2$$

$$= \frac{1}{c_{12} + c_{66}}\left[(c_{22} - c_{66}\gamma_1^2)(c_{11}\gamma_1^2 - c_{66}) - (c_{12} + c_{66})^2\gamma_1^2\right]$$

$$= -\frac{c_{11}c_{66}\gamma_1^4 + [c_{12}(c_{12} + 2c_{66}) - c_{11}c_{22}]\gamma_1^2 + c_{22}c_{66}}{c_{12} + c_{66}}$$

(A.43)

and

$$c_{22}q_2 - c_{66}q_2\gamma_2^2 - (c_{12} + c_{66})\gamma_2^2 =$$

$$(c_{22} - c_{66}\gamma_2^2)q_2 - (c_{12} + c_{66})\gamma_2^2$$

$$= (c_{22} - c_{66}\gamma_2^2)\frac{c_{11}\gamma_2^2 - c_{66}}{c_{12} + c_{66}} - (c_{12} + c_{66})\gamma_2^2$$

$$= \frac{1}{c_{12} + c_{66}}\left[(c_{22} - c_{66}\gamma_2^2)(c_{11}\gamma_2^2 - c_{66}) - (c_{12} + c_{66})^2\gamma_2^2\right]$$

$$= -\frac{c_{11}c_{66}\gamma_2^4 + [c_{12}(c_{12} + 2c_{66}) - c_{11}c_{22}]\gamma_2^2 + c_{22}c_{66}}{c_{12} + c_{66}}$$

(A.44)

Thus, y-direction equilibrium is satisfied if

$$c_{11}c_{66}\gamma_i^4+[c_{12}(c_{12}+2c_{66}) - c_{11}c_{22}]\gamma_i^2+c_{22}c_{66} = 0 \qquad \text{(A.28)}$$

which, again, is the characteristic equation.

4. <u>Combined Shear and Normal Displacement Discontinuities</u>

Since the material is assumed to be linearly elastic, the displacements resulting from one set of boundary conditions may be added to those resulting from another set to provide the solution to a problem involving both sets of boundary conditions. Therefore, the displacements for combined shear and normal displacement discontinuities are

$$\begin{aligned} u_x = &+ Q\,D_x \left\{ \frac{q_2}{\gamma_2}\left[\arctan\left(\frac{y/\gamma_1}{x-a}\right) - \arctan\left(\frac{y/\gamma_1}{x+a}\right)\right] \right. \\ &\left. - \frac{q_1}{\gamma_1}\left[\arctan\left(\frac{y/\gamma_2}{x-a}\right) - \arctan\left(\frac{y/\gamma_2}{x+a}\right)\right]\right\} \\ &+ Q\,D_y \left\{ \ln\left[\frac{(x-a)^2+(y/\gamma_1)^2}{(x+a)^2+(y/\gamma_1)^2}\right]^{1/2} \right. \\ &\left. - \ln\left[\frac{(x-a)^2+(y/\gamma_2)^2}{(x+a)^2+(y/\gamma_2)^2}\right]^{1/2}\right\} \end{aligned} \qquad \text{(A.45)}$$

$$\begin{aligned} u_y = &+ \frac{Q}{\gamma_1\gamma_2} D_x \left\{ \ln\left[\frac{(x-a)^2+(y/\gamma_1)^2}{(x+a)^2+(y/\gamma_1)^2}\right]^{1/2} \right. \\ &\left. - \ln\left[\frac{(x-a)^2+(y/\gamma_2)^2}{(x+a)^2+(y/\gamma_2)^2}\right]^{1/2}\right\} \end{aligned}$$

$$- Q\, D_y \left\{ \frac{q_1}{\gamma_1} \left[\arctan\left(\frac{y/\gamma_1}{x - a}\right) - \arctan\left(\frac{y/\gamma_1}{x + a}\right) \right] \right.$$

$$\left. - \frac{q_2}{\gamma_2} \left[\arctan\left(\frac{y/\gamma_2}{x - a}\right) - \arctan\left(\frac{y/\gamma_2}{x + a}\right) \right] \right\} \qquad (A.46)$$

5. Coordinate Transformation to Obtain the General Solution

If the crack is not aligned with the x-axis, the displacements may be determined by coordinate transformation. For a crack aligned with the $\bar{x}$, $\bar{y}$ system, transformation into the x, y (material) system involves the following relationships:

$$x = \bar{x} \cos \beta - \bar{y} \sin \beta \qquad (A.47)$$

$$y = \bar{x} \sin \beta + \bar{y} \cos \beta \qquad (A.48)$$

$$u_x = u_{\bar{x}} \cos \beta - u_{\bar{y}} \sin \beta \qquad (A.49)$$

$$u_y = u_{\bar{x}} \sin \beta + u_{\bar{y}} \cos \beta \qquad (A.50)$$

where β is the rotation angle measured counterclockwise from the x-axis to the $\bar{x}$-axis.

Carrying out the transformation on the form of the logarithm functions used in the displacement equations,

$$\ln [x^2 + (y/\gamma_i)^2]^{1/2} = \ln [A_i \bar{x}^2 + B_i \bar{x}\bar{y} + C_i \bar{y}^2]^{1/2} \qquad (A.51)$$

$$A_i = (\gamma_i^2 \cos^2 \beta + \sin^2 \beta) / \gamma_1^2 \qquad (A.52)$$

$$B_i = (1 - \gamma_i^2) \sin 2\beta / \gamma_1^2 \qquad (A.53)$$

$$C_i = (\gamma_i^2 \sin^2 \beta + \cos^2 \beta) / \gamma_1^2 \qquad (A.54)$$

leads to using

$$\ln\left[\frac{A_i(\bar{x} - a)^2 + B_i(\bar{x} - a)\bar{y} + C_i\bar{y}^2}{A_i(\bar{x} + a)^2 + B_i(\bar{x} + a)\bar{y} + C_i\bar{y}^2}\right]^{1/2}$$

Although at first it would appear that the form of the arctangent function should be

$$\arctan\left(\frac{y/\gamma_i}{x}\right) = \arctan\left(\frac{1}{\gamma_i}\frac{\bar{x}\sin\beta + \bar{y}\cos\beta}{\bar{x}\cos\beta - \bar{y}\sin\beta}\right) \qquad (A.55)$$

this would imply that the crack lies along the x-axis instead of along the $\bar{x}$-axis. To account for this, the form of the arctangent function used is

$$\arctan\left(\frac{\bar{y}/(\gamma_i A_i)}{\bar{x} + \frac{1}{2}B_i\bar{y}/A_i}\right)$$

Thus, the following arctangent expressions are appropriate:

$$\arctan\left(\frac{\bar{y}/(\gamma_i A_i)}{(\bar{x} - a) + \frac{1}{2}B_i\bar{y}/A_i}\right)$$

$$\arctan\left(\frac{\bar{y}/(\gamma_i A_i)}{(\bar{x} + a) + \frac{1}{2}B_i\bar{y}/A_i}\right)$$

The limits as $\bar{y}$ approaches zero are readily seen to be the same as before when y approached zero. Making these substitutions yields

$$
\begin{aligned}
u_x = + Q\, D_x \Bigg\{ & \frac{q_2}{\gamma_2} \left[\arctan\left(\frac{\bar{y}/(\gamma_1 A_1)}{(\bar{x} - a) + \frac{1}{2} B_1 \bar{y}/A_1} \right) - \arctan\left(\frac{\bar{y}/(\gamma_1 A_1)}{(\bar{x} + a) + \frac{1}{2} B_1 \bar{y}/A_1} \right) \right] \\
& - \frac{q_1}{\gamma_1} \left[\arctan\left(\frac{\bar{y}/(\gamma_2 A_2)}{(\bar{x} - a) + \frac{1}{2} B_2 \bar{y}/A_2} \right) - \arctan\left(\frac{\bar{y}/(\gamma_2 A_2)}{(\bar{x} + a) + \frac{1}{2} B_2 \bar{y}/A_2} \right) \right] \Bigg\} \\
+ Q\, D_y \Bigg\{ & \ln \left[\frac{A_1(\bar{x} - a)^2 + B_1(\bar{x} - a)\bar{y} + C_1 \bar{y}^2}{A_1(\bar{x} + a)^2 + B_1(\bar{x} + a)\bar{y} + C_1 \bar{y}^2} \right]^{1/2} \\
& - \ln \left[\frac{A_2(\bar{x} - a)^2 + B_2(\bar{x} - a)\bar{y} + C_2 \bar{y}^2}{A_2(\bar{x} + a)^2 + B_2(\bar{x} + a)\bar{y} + C_2 \bar{y}^2} \right]^{1/2} \Bigg\}
\end{aligned}
\tag{A.56}
$$

and

$$
\begin{aligned}
u_y = + \frac{Q}{\gamma_1 \gamma_2} D_x \Bigg\{ & \ln \left[\frac{A_1(\bar{x} - a)^2 + B_1(\bar{x} - a)\bar{y} + C_1 \bar{y}^2}{A_1(\bar{x} + a)^2 + B_1(\bar{x} + a)\bar{y} + C_1 \bar{y}^2} \right]^{1/2} \\
& - \ln \left[\frac{A_2(\bar{x} - a)^2 + B_2(\bar{x} - a)\bar{y} + C_2 \bar{y}^2}{A_2(\bar{x} + a)^2 + B_2(\bar{x} + a)\bar{y} + C_2 \bar{y}^2} \right]^{1/2} \Bigg\} \\
- Q\, D_y \Bigg\{ & \frac{q_1}{\gamma_1} \left[\arctan\left(\frac{\bar{y}/(\gamma_1 A_1)}{(\bar{x} - a) + \frac{1}{2} B_1 \bar{y}/A_1} \right) - \arctan\left(\frac{\bar{y}/(\gamma_1 A_1)}{(\bar{x} + a) + \frac{1}{2} B_1 \bar{y}/A_1} \right) \right] \\
& - \frac{q_2}{\gamma_2} \left[\arctan\left(\frac{\bar{y}/(\gamma_2 A_2)}{(\bar{x} - a) + \frac{1}{2} B_2 \bar{y}/A_2} \right) - \arctan\left(\frac{\bar{y}/(\gamma_2 A_2)}{(\bar{x} + a) + \frac{1}{2} B_2 \bar{y}/A_2} \right) \right] \Bigg\}
\end{aligned}
\tag{A.57}
$$

By making the following definitions,

$$\theta_1(\gamma_i) = \arctan\left[\frac{\bar{y}/(\gamma_i A_i)}{(\bar{x} - a) + \frac{1}{2}B_i\bar{y}/A_i}\right] \tag{A.58}$$

$$\theta_2(\gamma_i) = \arctan\left[\frac{\bar{y}/(\gamma_i A_i)}{(\bar{x} + a) + \frac{1}{2}B_i\bar{y}/A_i}\right] \tag{A.59}$$

$$r_1(\gamma_i) = \left[A_i(\bar{x} - a)^2 + B_i(\bar{x} - a)\bar{y} + C_i\bar{y}^2\right]^{1/2} \tag{A.60}$$

$$r_2(\gamma_i) = \left[A_i(\bar{x} + a)^2 + B_i(\bar{x} + a)\bar{y} + C_i\bar{y}^2\right]^{1/2} \tag{A.61}$$

the equations can be written in a more compact form:

$$u_x = + Q\,D_x\left[\frac{q_2}{\gamma_2}\left(\theta_1(\gamma_1) - \theta_2(\gamma_1)\right) - \frac{q_1}{\gamma_1}\left(\theta_1(\gamma_2) - \theta_2(\gamma_2)\right)\right]$$
$$+ Q\,D_y\left[\ln\left(\frac{r_1(\gamma_1)}{r_2(\gamma_1)}\right) - \ln\left(\frac{r_1(\gamma_2)}{r_2(\gamma_2)}\right)\right] \tag{A.62}$$

$$u_y = - Q\,D_y\left[\frac{q_1}{\gamma_1}\left(\theta_1(\gamma_1) - \theta_2(\gamma_1)\right) - \frac{q_2}{\gamma_2}\left(\theta_1(\gamma_2) - \theta_2(\gamma_2)\right)\right]$$
$$+ \frac{Q}{\gamma_1\gamma_2}D_x\left[\ln\left(\frac{r_1(\gamma_1)}{r_2(\gamma_1)}\right) - \ln\left(\frac{r_1(\gamma_2)}{r_2(\gamma_2)}\right)\right] \tag{A.63}$$

Since the displacement discontinuities of interest are $D_{\bar{x}}$ and $D_{\bar{y}}$, the above expressions are transformed using

$$D_x = D_{\bar{x}}\cos\beta - D_{\bar{y}}\sin\beta \tag{A.64}$$

$$D_y = D_{\bar{x}}\sin\beta + D_{\bar{y}}\cos\beta \tag{A.65}$$

The result is

$$u_x = + Q\, D_{\bar{x}} \left[\frac{q_2}{\gamma_2} \left[\theta_1(\gamma_1) - \theta_2(\gamma_1) \right] - \frac{q_1}{\gamma_1} \left[\theta_1(\gamma_2) - \theta_2(\gamma_2) \right] \right] \cos\beta$$

$$- Q\, D_{\bar{y}} \left[\frac{q_2}{\gamma_2} \left[\theta_1(\gamma_1) - \theta_2(\gamma_1) \right] - \frac{q_1}{\gamma_1} \left[\theta_1(\gamma_2) - \theta_2(\gamma_2) \right] \right] \sin\beta$$

$$+ Q\, D_{\bar{y}} \left[\ln\left(\frac{r_1(\gamma_1)}{r_2(\gamma_1)} \right) - \ln\left(\frac{r_1(\gamma_2)}{r_2(\gamma_2)} \right) \right] \cos\beta$$

$$+ Q\, D_{\bar{x}} \left[\ln\left(\frac{r_1(\gamma_1)}{r_2(\gamma_1)} \right) - \ln\left(\frac{r_1(\gamma_2)}{r_2(\gamma_2)} \right) \right] \sin\beta \qquad \text{(A.86)}$$

$$u_y = + \frac{Q}{\gamma_1\gamma_2} D_{\bar{x}} \left[\ln\left(\frac{r_1(\gamma_1)}{r_2(\gamma_1)} \right) - \ln\left(\frac{r_1(\gamma_2)}{r_2(\gamma_2)} \right) \right] \cos\beta$$

$$- \frac{Q}{\gamma_1\gamma_2} D_{\bar{y}} \left[\ln\left(\frac{r_1(\gamma_1)}{r_2(\gamma_1)} \right) - \ln\left(\frac{r_1(\gamma_2)}{r_2(\gamma_2)} \right) \right] \sin\beta$$

$$- Q\, D_{\bar{y}} \left[\frac{q_1}{\gamma_1} \left[\theta_1(\gamma_1) - \theta_2(\gamma_1) \right] - \frac{q_2}{\gamma_2} \left[\theta_1(\gamma_2) - \theta_2(\gamma_2) \right] \right] \cos\beta$$

$$- Q\, D_{\bar{x}} \left[\frac{q_1}{\gamma_1} \left[\theta_1(\gamma_1) - \theta_2(\gamma_1) \right] - \frac{q_2}{\gamma_2} \left[\theta_1(\gamma_2) - \theta_2(\gamma_2) \right] \right] \sin\beta \qquad \text{(A.87)}$$

These equations are also valid if the origin of the $\bar{x}$, $\bar{y}$ system is located at (c_x, c_y) with respect to the x, y system. In that case, the $\bar{x}$, $\bar{y}$ coordinates are defined by

$$\bar{x} = (x - c_x) \cos \beta + (y - c_y) \sin \beta \tag{A.68}$$

$$\bar{y} = - (x - c_x) \sin \beta + (y - c_y) \cos \beta \tag{A.69}$$

6. <u>Stresses for the General Solution</u>

The stresses are determined from the stress-strain relationships:

$$\begin{Bmatrix} \sigma_{xx} \\ \sigma_{yy} \\ \tau_{xy} \end{Bmatrix} = \begin{bmatrix} c_{11} & c_{12} & 0 \\ c_{12} & c_{22} & 0 \\ 0 & 0 & c_{66} \end{bmatrix} \begin{Bmatrix} u_{x,x} \\ u_{y,y} \\ u_{x,y} + u_{y,x} \end{Bmatrix} \tag{A.14}$$

and the coordinate transformation relationships:

$$\frac{\partial}{\partial x} = (\cos \beta) \frac{\partial}{\partial \bar{x}} - (\sin \beta) \frac{\partial}{\partial \bar{y}} \tag{A.70}$$

$$\frac{\partial}{\partial y} = (\sin \beta) \frac{\partial}{\partial \bar{x}} + (\cos \beta) \frac{\partial}{\partial \bar{y}} \tag{A.71}$$

These are combined to yield

$$\sigma_{xx} = c_{11} \cos \beta \, u_{x,\bar{x}} - c_{11} \sin \beta \, u_{x,\bar{y}} + c_{12} \sin \beta \, u_{y,\bar{x}} + c_{12} \cos \beta \, u_{y,\bar{y}} \tag{A.72}$$

$$\sigma_{yy} = c_{12}\cos\beta\, u_{x,\bar{x}} - c_{12}\sin\beta\, u_{x,\bar{y}}$$

$$+ c_{22}\sin\beta\, u_{y,\bar{x}} + c_{22}\cos\beta\, u_{y,\bar{y}} \qquad (A.73)$$

$$\tau_{xy} = c_{66}\sin\beta\, u_{x,\bar{x}} + c_{66}\cos\beta\, u_{x,\bar{y}}$$

$$+ c_{66}\cos\beta\, u_{y,\bar{x}} - c_{66}\sin\beta\, u_{y,\bar{y}} \qquad (A.74)$$

With the definitions of u_x and u_y above, we determine the following partial derivatives:

$$\frac{\partial}{\partial\bar{x}}\,\Theta_1(\gamma_i) \qquad \frac{\partial}{\partial\bar{x}}\,\Theta_2(\gamma_i)$$

$$\frac{\partial}{\partial\bar{y}}\,\Theta_1(\gamma_i) \qquad \frac{\partial}{\partial\bar{y}}\,\Theta_2(\gamma_i)$$

$$\frac{\partial}{\partial\bar{x}}\ln\left[r_1(\gamma_i)/r_2(\gamma_i)\right] = \frac{\partial}{\partial\bar{x}}\ln\left[r_1(\gamma_i)\right] - \frac{\partial}{\partial\bar{x}}\ln\left[r_2(\gamma_i)\right]$$

$$\frac{\partial}{\partial\bar{y}}\ln\left[r_1(\gamma_i)/r_2(\gamma_i)\right] = \frac{\partial}{\partial\bar{y}}\ln\left[r_1(\gamma_i)\right] - \frac{\partial}{\partial\bar{y}}\ln\left[r_2(\gamma_i)\right]$$

These are readily obtained as

$$\frac{\partial}{\partial\bar{x}}\,\Theta_1(\gamma_i) = -\frac{\bar{y}/\gamma_i A_i}{(\bar{x} - a + \frac{1}{2}B_i\bar{y}/A_i)^2 + (\bar{y}/\gamma_i A_i)^2} \qquad (A.75)$$

$$\frac{\partial}{\partial\bar{x}}\,\Theta_2(\gamma_i) = -\frac{\bar{y}/\gamma_i A_i}{(\bar{x} + a + \frac{1}{2}B_i\bar{y}/A_i)^2 + (\bar{y}/\gamma_i A_i)^2} \qquad (A.76)$$

$$\frac{\partial}{\partial\bar{y}}\,\Theta_1(\gamma_i) = +\frac{(\bar{x} - a)/\gamma_i A_i}{(\bar{x} - a + \frac{1}{2}B_i\bar{y}/A_i)^2 + (\bar{y}/\gamma_i A_i)^2} \qquad (A.77)$$

$$\frac{\partial}{\partial \bar{y}} \Theta_2(\gamma_i) = + \frac{(\bar{x} + a)/\gamma_i A_i}{(\bar{x} + a + \frac{1}{2}B_i \bar{y}/A_i)^2 + (\bar{y}/\gamma_i A_i)^2} \tag{A.78}$$

$$\frac{\partial}{\partial \bar{x}} \ln\left[r_1(\gamma_i)\right] = \frac{A_i(\bar{x} - a) + \frac{1}{2}B_i \bar{y}}{A_i(\bar{x} - a)^2 + B_i(\bar{x} - a)\bar{y} + C_i \bar{y}^2} \tag{A.79}$$

$$\frac{\partial}{\partial \bar{x}} \ln\left[r_2(\gamma_i)\right] = \frac{A_i(\bar{x} + a) + \frac{1}{2}B_i \bar{y}}{A_i(\bar{x} + a)^2 + B_i(\bar{x} + a)\bar{y} + C_i \bar{y}^2} \tag{A.80}$$

$$\frac{\partial}{\partial \bar{y}} \ln\left[r_1(\gamma_i)\right] = \frac{\frac{1}{2}B_i(\bar{x} - a) + C_i \bar{y}}{A_i(\bar{x} - a)^2 + B_i(\bar{x} - a)\bar{y} + C_i \bar{y}^2} \tag{A.81}$$

$$\frac{\partial}{\partial \bar{y}} \ln\left[r_2(\gamma_i)\right] = \frac{\frac{1}{2}B_i(\bar{x} + a) + C_i \bar{y}}{A_i(\bar{x} + a)^2 + B_i(\bar{x} + a)\bar{y} + C_i \bar{y}^2} \tag{A.82}$$

But, from Theorem 2 in Appendix B,

$$(\bar{x} \pm a + \tfrac{1}{2}B_i \bar{y}/A_i)^2 + (\bar{y}/\gamma_i A_i)^2 = A_i(\bar{x} \pm a)^2 + B_i(\bar{x} \pm a)\bar{y} + C_i \bar{y}^2 \tag{B.14}$$

So the derivatives of Θ_1 and Θ_2 can be written

$$\frac{\partial}{\partial \bar{x}} \Theta_1(\gamma_i) = - \frac{\bar{y}/\gamma_i}{A_i(\bar{x} - a)^2 + B_i(\bar{x} - a)\bar{y} + C_i \bar{y}^2} \tag{A.83}$$

$$\frac{\partial}{\partial \bar{x}} \Theta_2(\gamma_i) = - \frac{\bar{y}/\gamma_i}{A_i(\bar{x} + a)^2 + B_i(\bar{x} + a)\bar{y} + C_i \bar{y}^2} \tag{A.84}$$

$$\frac{\partial}{\partial \bar{y}} \Theta_1(\gamma_i) = + \frac{(\bar{x} - a)/\gamma_i}{A_i(\bar{x} - a)^2 + B_i(\bar{x} - a)\bar{y} + C_i \bar{y}^2} \tag{A.85}$$

$$\frac{\partial}{\partial \bar{y}} \Theta_2(\gamma_i) = + \frac{(\bar{x} + a)/\gamma_i}{A_i(\bar{x} + a)^2 + B_i(\bar{x} + a)\bar{y} + C_i\bar{y}^2} \tag{A.86}$$

Thus, we can define the following terms:

$$R_{1i} = \frac{\partial}{\partial \bar{x}}\left[\Theta_1(\gamma_i) - \Theta_2(\gamma_i)\right]$$

$$= - \frac{\bar{y}/\gamma_i}{A_i(\bar{x} - a)^2 + B_i(\bar{x} - a)\bar{y} + C_i\bar{y}^2} + \frac{\bar{y}/\gamma_i}{A_i(\bar{x} + a)^2 + B_i(\bar{x} + a)\bar{y} + C_i\bar{y}^2} \tag{A.87}$$

$$R_{2i} = \frac{\partial}{\partial \bar{y}}\left[\Theta_1(\gamma_i) - \Theta_2(\gamma_i)\right]$$

$$= \frac{(\bar{x} - a)/\gamma_i}{A_i(\bar{x} - a)^2 + B_i(\bar{x} - a)\bar{y} + C_i\bar{y}^2} - \frac{(\bar{x} + a)/\gamma_i}{A_i(\bar{x} + a)^2 + B_i(\bar{x} + a)\bar{y} + C_i\bar{y}^2} \tag{A.88}$$

$$R_{3i} = \frac{\partial}{\partial \bar{x}} \ln\left[r_1(\gamma_i)/r_2(\gamma_i)\right]$$

$$= \frac{A_i(\bar{x} - a) + \frac{1}{2}B_i\bar{y}}{A_i(\bar{x} - a)^2 + B_i(\bar{x} - a)\bar{y} + C_i\bar{y}^2} - \frac{A_i(\bar{x} + a) + \frac{1}{2}B_i\bar{y}}{A_i(\bar{x} + a)^2 + B_i(\bar{x} + a)\bar{y} + C_i\bar{y}^2} \tag{A.89}$$

$$R_{4i} = \frac{\partial}{\partial \bar{y}} \ln\left[r_1(\gamma_i)/r_2(\gamma_i)\right]$$

$$= \frac{\frac{1}{2}B_i(\bar{x} - a) + C_i\bar{y}}{A_i(\bar{x} - a)^2 + B_i(\bar{x} - a)\bar{y} + C_i\bar{y}^2}$$

$$- \frac{\frac{1}{2}B_i(\bar{x} + a) + C_i\bar{y}}{A_i(\bar{x} + a)^2 + B_i(\bar{x} + a)\bar{y} + C_i\bar{y}^2} \qquad \text{(A.90)}$$

Now, with Eqs (A.66) and (A.67) we have

$$u_{x,\bar{x}} = Q\, D_{\bar{x}}\left[\frac{q_2}{\gamma_2} R_{11} - \frac{q_1}{\gamma_1} R_{12}\right]\cos\beta - Q\, D_{\bar{y}}\left[\frac{q_2}{\gamma_2} R_{11} - \frac{q_1}{\gamma_1} R_{12}\right]\sin\beta$$

$$+ Q\, D_{\bar{y}}\left[R_{31} - R_{32}\right]\cos\beta + Q\, D_{\bar{x}}\left[R_{31} - R_{32}\right]\sin\beta \qquad \text{(A.91)}$$

$$u_{x,\bar{y}} = Q\, D_{\bar{x}}\left[\frac{q_2}{\gamma_2} R_{21} - \frac{q_1}{\gamma_1} R_{22}\right]\cos\beta - Q\, D_{\bar{y}}\left[\frac{q_2}{\gamma_2} R_{21} - \frac{q_1}{\gamma_1} R_{22}\right]\sin\beta$$

$$+ Q\, D_{\bar{y}}\left[R_{41} - R_{42}\right]\cos\beta + Q\, D_{\bar{x}}\left[R_{41} - R_{42}\right]\sin\beta \qquad \text{(A.92)}$$

$$u_{y,\bar{x}} = \frac{Q}{\gamma_1\gamma_2} D_{\bar{x}}\left[R_{31} - R_{32}\right]\cos\beta - \frac{Q}{\gamma_1\gamma_2} D_{\bar{y}}\left[R_{31} - R_{32}\right]\sin\beta$$

$$- Q\, D_{\bar{y}}\left[\frac{q_1}{\gamma_1} R_{11} - \frac{q_2}{\gamma_2} R_{12}\right]\cos\beta - Q\, D_{\bar{x}}\left[\frac{q_1}{\gamma_1} R_{11} - \frac{q_2}{\gamma_2} R_{12}\right]\sin\beta \qquad \text{(A.93)}$$

$$u_{y,\bar{y}} = \frac{Q}{\gamma_1\gamma_2} D_{\bar{x}}\left[R_{41} - R_{42}\right]\cos\beta - \frac{Q}{\gamma_1\gamma_2} D_{\bar{y}}\left[R_{41} - R_{42}\right]\sin\beta$$

$$- Q\, D_{\bar{y}}\left[\frac{q_1}{\gamma_1} R_{21} - \frac{q_2}{\gamma_2} R_{22}\right]\cos\beta - Q\, D_{\bar{x}}\left[\frac{q_1}{\gamma_1} R_{21} - \frac{q_2}{\gamma_2} R_{22}\right]\sin\beta \qquad \text{(A.94)}$$

Defining

$$S_1 = \frac{q_2}{\gamma_2} R_{11} - \frac{q_1}{\gamma_1} R_{12} \qquad S_2 = \frac{q_2}{\gamma_2} R_{21} - \frac{q_1}{\gamma_1} R_{22}$$

$$S_3 = \frac{q_1}{\gamma_1} R_{11} - \frac{q_2}{\gamma_2} R_{12} \qquad S_4 = \frac{q_1}{\gamma_1} R_{21} - \frac{q_2}{\gamma_2} R_{22}$$

the partial derivatives become

$$u_{x,\bar{x}} = Q\, D_{\bar{x}} S_1 \cos\beta - Q\, D_{\bar{y}} S_2 \sin\beta + Q\, D_{\bar{y}} (R_{31} - R_{32}) \cos\beta$$

$$+ Q\, D_{\bar{x}} (R_{31} - R_{32}) \sin\beta \qquad \text{(A.95)}$$

$$u_{x,\bar{y}} = Q\, D_{\bar{x}} S_2 \cos\beta - Q\, D_{\bar{y}} S_2 \sin\beta + Q\, D_{\bar{y}} (R_{41} - R_{42}) \cos\beta$$

$$+ Q\, D_{\bar{x}} (R_{41} - R_{42}) \sin\beta \qquad \text{(A.96)}$$

$$u_{y,\bar{x}} = \frac{Q}{\gamma_1 \gamma_2} D_{\bar{x}} (R_{31} - R_{32}) \cos\beta - \frac{Q}{\gamma_1 \gamma_2} D_{\bar{y}} (R_{31} - R_{32}) \sin\beta$$

$$- Q\, D_{\bar{y}} S_3 \cos\beta - Q\, D_{\bar{x}} S_3 \sin\beta \qquad \text{(A.97)}$$

$$u_{y,\bar{y}} = \frac{Q}{\gamma_1 \gamma_2} D_{\bar{x}} (R_{41} - R_{42}) \cos\beta - \frac{Q}{\gamma_1 \gamma_2} D_{\bar{y}} (R_{41} - R_{42}) \sin\beta$$

$$- Q\, D_{\bar{y}} S_4 \cos\beta - Q\, D_{\bar{x}} S_4 \sin\beta \qquad \text{(A.98)}$$

Using the stress-strain relationships (Eq (A.14)) results in

$$\sigma_{xx} = c_{11}\cos\beta\, u_{x,\bar{x}} - c_{11}\sin\beta\, u_{x,\bar{y}} + c_{12}\sin\beta\, u_{y,\bar{x}} + c_{12}\cos\beta\, u_{y,\bar{y}}$$

$$= Q\, D_{\bar{x}}\Big[S_1 c_{11}\cos^2\beta - S_2 c_{11}\sin\beta\cos\beta$$
$$- S_3 c_{12}\sin^2\beta - S_4 c_{12}\sin\beta\cos\beta$$
$$+ (R_{31} - R_{32})(c_{11} + c_{12}/\gamma_1\gamma_2)\sin\beta\cos\beta$$
$$- (R_{41} - R_{42})(c_{11}\sin^2\beta - c_{12}\cos^2\beta/\gamma_1\gamma_2)\Big]$$
$$- Q\, D_{\bar{y}}\Big[S_1 c_{11}\sin\beta\cos\beta - S_2 c_{11}\sin^2\beta$$
$$+ S_3 c_{12}\sin\beta\cos\beta + S_4 c_{12}\cos^2\beta$$
$$- (R_{31} - R_{32})(c_{11}\cos^2\beta - c_{12}\sin^2\beta/\gamma_1\gamma_2)$$
$$+ (R_{41} - R_{42})(c_{11} + c_{12}/\gamma_1\gamma_2)\sin\beta\cos\beta\Big] \qquad \text{(A.99)}$$

$$\sigma_{yy} = c_{12}\cos\beta\, u_{x,\bar{x}} - c_{12}\sin\beta\, u_{x,\bar{y}} + c_{22}\sin\beta\, u_{y,\bar{x}} + c_{22}\cos\beta\, u_{y,\bar{y}}$$

$$= Q\, D_{\bar{x}}\Big[S_1 c_{12}\cos^2\beta - S_2 c_{12}\sin\beta\cos\beta$$
$$- S_3 c_{22}\sin^2\beta - S_4 c_{22}\sin\beta\cos\beta$$
$$+ (R_{31} - R_{32})(c_{12} + c_{22}/\gamma_1\gamma_2)\sin\beta\cos\beta$$
$$- (R_{41} - R_{42})(c_{12}\sin^2\beta - c_{22}\cos^2\beta/\gamma_1\gamma_2)\Big]$$
$$- Q\, D_{\bar{y}}\Big[S_1 c_{12}\sin\beta\cos\beta - S_2 c_{12}\sin^2\beta$$
$$+ S_3 c_{22}\sin\beta\cos\beta + S_4 c_{22}\cos^2\beta$$
$$- (R_{31} - R_{32})(c_{12}\cos^2\beta - c_{22}\sin^2\beta/\gamma_1\gamma_2)$$
$$+ (R_{41} - R_{42})(c_{12} + c_{22}/\gamma_1\gamma_2)\sin\beta\cos\beta\Big] \qquad \text{(A.100)}$$

$$\tau_{xy} = c_{66}\sin\beta\, u_{x,\bar{x}} + c_{66}\cos\beta\, u_{x,\bar{y}} + c_{66}\cos\beta\, u_{y,\bar{x}} - c_{66}\sin\beta\, u_{y,\bar{y}}$$

$$= Q\, D_{\bar{x}} c_{66}\Big[S_1\sin\beta\cos\beta + S_2\cos^2\beta$$
$$- S_3\sin\beta\cos\beta + S_4\sin^2\beta$$
$$+ (R_{31} - R_{32})(\sin^2\beta + \cos^2\beta/\gamma_1\gamma_2)$$
$$+ (R_{41} - R_{42})(1 - 1/\gamma_1\gamma_2)\sin\beta\cos\beta\Big]$$
$$- Q\, D_{\bar{y}} c_{66}\Big[S_1\sin^2\beta + S_2\sin\beta\cos\beta + S_3\cos^2\beta$$
$$- S_4\sin\beta\cos\beta - (R_{31} - R_{32})(1 - 1/\gamma_1\gamma_2)\sin\beta\cos\beta$$
$$- (R_{41} - R_{42})(\cos^2\beta + \sin^2\beta/\gamma_1\gamma_2)\Big] \qquad \text{(A.101)}$$

As can be seen from the definitions of the R_{ij}'s in Eqs (A.87) through (A.90), the stresses tend to zero as the distance from the origin tends to infinity. Thus, the final boundary condition of zero stress at infinity is satisfied.

Appendix B: Proofs

Theorem 1. Given the material constants c_{11}, c_{12}, c_{22}, c_{66}, γ_1, γ_2 and

$$q_1 = \frac{c_{11}\gamma_1^2 - c_{66}}{c_{12} + c_{66}} \qquad q_2 = \frac{c_{11}\gamma_2^2 - c_{66}}{c_{12} + c_{66}}$$

then $q_1 q_2 = 1$.

Proof:

Using the definitions of q_1 and q_2 leads to

$$q_1 q_2 = \frac{(c_{11}\gamma_1^2 - c_{66})(c_{11}\gamma_2^2 - c_{66})}{(c_{12} + c_{66})^2} \tag{B.1}$$

Define

$$\delta^2 = [c_{11}c_{22} - c_{12}(c_{12} + c_{66})]^2 - 4\, c_{11}c_{22}c_{66}^2. \tag{B.2}$$

Then, from the characteristic equation:

$$c_{11}c_{66}\gamma^4 + [c_{12}(c_{12} + 2c_{66}) - c_{11}c_{22}]\gamma^2 + c_{22}c_{66} = 0 \tag{B.3}$$

we have

$$\gamma_1^2 = \frac{c_{11}c_{22} - c_{12}(c_{12} + 2c_{66})}{2c_{11}c_{66}} - \frac{\delta}{2c_{11}c_{66}} \tag{B.4}$$

$$\gamma_2^2 = \frac{c_{11}c_{22} - c_{12}(c_{12} + 2c_{66})}{2c_{11}c_{66}} + \frac{\delta}{2c_{11}c_{66}} \tag{B.5}$$

So,

$$c_{11}\gamma_1^2 - c_{66} = \frac{c_{11}c_{22} - c_{12}(c_{12} + 2c_{66}) - 2c_{66}^2}{2c_{66}} - \frac{\delta}{2c_{66}} \tag{B.6}$$

and

$$c_{11}\gamma_2^2 - c_{66} = \frac{c_{11}c_{22} - c_{12}(c_{12} + 2c_{66}) - 2c_{66}^2}{2c_{66}} + \frac{\delta}{2c_{66}} \tag{B.7}$$

Therefore,

$$(c_{11}\gamma_1^2 - c_{66})(c_{11}\gamma_2^2 - c_{66}) =$$

$$\left[\frac{c_{11}c_{22} - c_{12}(c_{12} + 2c_{66}) - 2c_{66}^2}{2c_{66}}\right]^2 - \left[\frac{\delta}{2c_{66}}\right]^2$$

$$= \frac{1}{4c_{66}^2}\left[[c_{11}c_{22} - c_{12}(c_{12} + 2c_{66}) - 2c_{66}^2]^2 - \delta^2\right]$$

$$= \frac{1}{4c_{66}^2}\Big[[c_{11}c_{22} - c_{12}(c_{12} + 2c_{66})]^2$$

$$- 2(2c_{66}^2)[c_{11}c_{22} - c_{12}(c_{12} + 2c_{66})] + 4c_{66}^4 - \delta^2\Big]$$

$$= \frac{1}{4c_{66}^2}\Big[[c_{11}c_{22} - c_{12}(c_{12} + 2c_{66})]^2 - 4c_{11}c_{22}c_{66}^2 + 4c_{12}^2c_{66}^2$$

$$+ 8c_{12}c_{66}^3 + 4c_{66}^4 - [c_{11}c_{22} - c_{12}(c_{12} + c_{66})]^2$$

$$+ 4\, c_{11}c_{22}c_{66}^2 \Big]$$

$$= \frac{1}{4c_{66}^2}\Big[4c_{12}^2c_{66}^2 + 8c_{12}c_{66}^3 + 4c_{66}^4 \Big]$$

$$= c_{12}^2 + 2c_{12}c_{66} + c_{66}^2$$

$$= (c_{12} + c_{66})^2$$

Thus,

$$(c_{11}\gamma_1^2 - c_{66})(c_{11}\gamma_2^2 - c_{66}) = (c_{12} + c_{66})^2 \tag{B.8}$$

and

$$q_1q_2 = \frac{(c_{11}\gamma_1^2 - c_{66})(c_{11}\gamma_2^2 - c_{66})}{(c_{12} + c_{66})^2} = \frac{(c_{12} + c_{66})^2}{(c_{12} + c_{66})^2} \tag{B.9}$$

Therefore, $q_1q_2 = 1$. □

Theorem 2. Given the material constants γ_1, γ_2, the measured angle β, and the half-crack length a, and defining the parameters

$$A_i = (\gamma_i^2 \cos^2 \beta + \sin^2 \beta) / \gamma_i^2$$

$$B_i = (1 - \gamma_i^2) \sin 2\beta / \gamma_i^2$$

$$C_i = (\gamma_i^2 \sin^2 \beta + \cos^2 \beta) / \gamma_i^2$$

then

$$[\bar{x} \pm a + \tfrac{1}{2}B_i\bar{y}/A_i]^2 + [\bar{y}/(\gamma_i A_i)]^2 = [A_i(\bar{x} \pm a)^2 + B_i(\bar{x} \pm a)\bar{y} + C_i\bar{y}^2]/A_i$$

where $\bar{x}$, $\bar{y}$ are the local coordinates.

Proof:

Expanding the binomial,

$$[\bar{x} \pm a + \tfrac{1}{2}B_i\bar{y}/A_i]^2 + [\bar{y}/(\gamma_i A_i)]^2$$

$$= (\bar{x} \pm a)^2 + (B_i/A_i)(\bar{x} \pm a)\bar{y} + \tfrac{1}{4}\bar{y}^2(B_i/A_i)^2 + \bar{y}^2/(\gamma_i A_i)^2$$

$$= (\bar{x} \pm a)^2 + (B_i/A_i)(\bar{x} \pm a)\bar{y} + [(\tfrac{1}{4}B_i^2 + 1/\gamma_i^2)/A_i^2]\bar{y}^2$$

Using the definition of B_i:

$$B_i = (1 - \gamma_i^2) \sin 2\beta / \gamma_i^2 = 2\,(1 - \gamma_i^2) \sin \beta \cos \beta / \gamma_i^2 \qquad (B.10)$$

leads to

$$(\tfrac{1}{4}B_i^2 + 1/\gamma_i^2)/A_i^2 = [(1 - \gamma_i^2)^2 \sin^2\beta \cos^2\beta + \gamma_i^2]/\gamma_i^4 A_i^2$$

$$= \Big[\sin^2\beta \cos^2\beta - 2\gamma_i^2 \sin^2\beta \cos^2\beta + \gamma_i^4 \sin^2\beta \cos^2\beta + \gamma_i^2\Big]\frac{1}{\gamma_i^4 A_i^2}$$

$$= \Big[\sin^2\beta \cos^2\beta - 2\gamma_i^2 \sin^2\beta \cos^2\beta + \gamma_i^4 \sin^2\beta \cos^2\beta + \gamma_i^2(\sin^2\beta + \cos^2\beta)\Big]\frac{1}{\gamma_i^4 A_i^2}$$

$$= \Big[\sin^2\beta \cos^2\beta - \gamma_i^2 \sin^2\beta \cos^2\beta - \gamma_i^2 \sin^2\beta \cos^2\beta + \gamma_i^4 \sin^2\beta \cos^2\beta + \gamma_i^2\sin^2\beta + \gamma_i^2\cos^2\beta\Big]\frac{1}{\gamma_i^4 A_i^2}$$

$$= \Big[\gamma_i^4 \sin^2\beta \cos^2\beta + \gamma_i^2\sin^2\beta - \gamma_i^2 \sin^2\beta \cos^2\beta + \gamma_i^2\cos^2\beta - \gamma_i^2 \sin^2\beta \cos^2\beta + \sin^2\beta \cos^2\beta\Big]\frac{1}{\gamma_i^4 A_i^2}$$

$$= \Big[\gamma_i^4 \sin^2\beta \cos^2\beta + \gamma_i^2\sin^2\beta\,(1 - \cos^2\beta) + \gamma_i^2\cos^2\beta\,(1 - \sin^2\beta) + \sin^2\beta \cos^2\beta\Big]\frac{1}{\gamma_i^4 A_i^2}$$

$$= \Big[\gamma_i^4 \sin^2\beta \cos^2\beta + \gamma_i^2\sin^4\beta + \gamma_i^2\cos^4\beta + \sin^2\beta \cos^2\beta\Big]\frac{1}{\gamma_i^4 A_i^2}$$

$$= \left[(\gamma_i^2 \sin^2 \beta + \cos^2 \beta)(\gamma_i^2 \cos^2 \beta + \sin^2 \beta) \right] \frac{1}{\gamma_i^4 A_i^2}.$$

Thus,

$$(\tfrac{1}{4}B_i^2 + 1/\gamma_i^2)/A_i^2 =$$

$$\left[(\gamma_i^2 \sin^2 \beta + \cos^2 \beta)(\gamma_i^2 \cos^2 \beta + \sin^2 \beta) \right] \frac{1}{\gamma_i^4 A_i^2}. \qquad (B.11)$$

Using the definition of A_i leads to

$$(\tfrac{1}{4}B_i^2 + 1/\gamma_i^2)/A_i^2 = \left[(\gamma_i^2 \sin^2 \beta + \cos^2 \beta)\, \gamma_i^2 A_i \right] \frac{1}{\gamma_i^4 A_i^2}$$

$$= \frac{\gamma_i^2 \sin^2 \beta + \cos^2 \beta}{\gamma_i^2 A_i}, \qquad (B.12)$$

while using the definition of C_i leads to

$$(\tfrac{1}{4}B_i^2 + 1/\gamma_i^2)/A_i^2 = C_i/A_i. \qquad (B.13)$$

Thus,

$$[\bar{x} \pm a + \tfrac{1}{2}B_i \bar{y}/A_i]^2 + [\bar{y}/(\gamma_i A_i)]^2$$

$$= (\bar{x} \pm a)^2 + (B_i/A_i)(\bar{x} \pm a)\bar{y} + (C_i/A_i)\bar{y}^2. \qquad (B.14)$$

Therefore, $[\bar{x} \pm a + \tfrac{1}{2}B_i \bar{y}/A_i]^2 + [\bar{y}/(\gamma_i A_i)]^2$

$$= [A_i(\bar{x} \pm a)^2 + B_i(\bar{x} \pm a)\bar{y} + C_i \bar{y}^2]/A_i. \qquad \square$$

Appendix C: Program TWODD

NOTE: The information in this appendix is taken directly from Crouch and Starfield (Reference 7) with only slight modification.

1. Input (Data) Deck

Program TWODD requires the following six sets of cards:

Set 1: Free FORMAT; one card must be given (may be blank). Columns 1-80 of this card contain any desired information to identify the problem being solved.

Set 2: FORMAT (3I4); one card must be given to specify the following control parameters.

NUMBS = number of straight line boundary segments (each containing at least one boundary element) used to define boundary contours.

NUMOS = number of other line segments (not on a boundary) along which displacements, stresses, and stress intensity factors are to be computed.

$$KSYM = \begin{cases} 1 & \text{no symmetry conditions imposed.} \\ 2 & \text{x=XSYM (Card 3) is a line of symmetry.} \\ 3 & \text{y=YSYM (Card 3) is a line of symmetry.} \\ 4 & \text{x=XSYM and y=YSYM (Card 3) are lines of symmetry.} \end{cases}$$

Set 3: FORMAT (F6.2,E11.4,2F12.4); one card must be given to define the elastic constants and specify the locations of lines of symmetry (if any).

PR = Poisson's ratio (ν).

E = Young's modulus (E).

XSYM = location of line of symmetry parallel to y-axis (XSYM is ignored if KSYM = 1 or 3 on Card 2).

YSYM = location of line of symmetry parallel to x-axis (YSYM is ignored if KSYM = 2 or 4 on Card 2).

Set 4: FORMAT (3E11.4); one card must be given to define the initial stresses (if any) in the region of interest.

PXX = σ_{xx} at infinity.

PYY = σ_{yy} at infinity.

PXY = τ_{xy} at infinity.

Set 5: FORMAT (I4,4F12.4,I4,2E11.4); NUMBS cards must be given to define the locations and boundary conditions of the boundary elements.

NUM = number of equally spaced boundary elements along a straight line segment, all elements having the same boundary conditions.

XBEG = x-coordinate of beginning of line segment.

YBEG = y-coordinate of beginning of line segment.

XEND = x-coordinate of end of line segment.

YEND = y-coordinate of end of line segment.

$$\text{KODE} = \begin{cases} 1 & \sigma_s \text{ and } \sigma_n \text{ prescribed.} \\ 2 & u_s \text{ and } u_n \text{ prescribed.} \\ 3 & u_s \text{ and } \sigma_n \text{ prescribed.} \\ 4 & \sigma_s \text{ and } u_n \text{ prescribed.} \end{cases}$$

BVS = resultant shear stress (σ_s) or displacement (u_s).

BVN = resultant normal stress (σ_s) or displacement (u_s).

Set 6: FORMAT (4F12.4,2I4); NUMOS cards must be given to define locations of points inside the region of interest where displacements, stresses, and stress intensity factors are to be computed.

XBEG = x-coordinate of first point on line.

YBEG = y-coordinate of first point on line.

XEND = x-coordinate of last point on line.

YEND = y-coordinate of last point on line.

NUMPB = number of equally spaced points between the specified first and last points.

$$\text{KTYPE} = \begin{cases} 0 & \text{compute displacements and stresses only.} \\ 1 & \text{compute stress intensity factors as well.} \end{cases}$$

Note: If KTYPE=1, (XBEG,YBEG) must be the location of a crack tip, and the line defined by (XEND,YEND) must extend in the direction of the crack in order for the computed stress intensity factors to have any meaning.

2. Program TWODD Listing

```
      PROGRAM TWODD
C
      COMMON/S1/PI,PR,PR1,PR2,CON,CONS
      COMMON/S2/SXXS,SXXN,SYYS,SYYN,SXYS,SXYN,UXS,UXN,UYS,UYN
      COMMON/S3/C(1600,1600),B(1600),D(1600)
C
      DIMENSION XM(800),YM(800),A(800),COSBET(800),SINBET(800),KOD(800)
      DIMENSION TITLE(20)
C
      OPEN (UNIT=5,FILE='TWODD.DAT',STATUS='OLD')
      OPEN (UNIT=6,FILE='TWODD.LIS',STATUS='NEW')
      READ (5,1) (TITLE(I),I=1,20)
      WRITE (6,2) (TITLE(I),I=1,20)
      READ (5,3) NUMBS,NUMOS,KSYM
      READ (5,4) PR,E,XSYM,YSYM
      READ (5,5) PXX,PYY,PXY
      WRITE (6,6) NUMBS,NUMOS
      GO TO (80,85,90,95),KSYM
   80 WRITE (6,7)
      GO TO 100
   85 WRITE (6,8) XSYM
      GO TO 100
   90 WRITE (6,9) YSYM
      GO TO 100
   95 WRITE (6,10) XSYM,YSYM
C
  100 CONTINUE
      WRITE (6,11) PR,E
      WRITE (6,12) PXX,PYY,PXY
C
      PI=4.*ATAN(1.)
      CON=1./(4.*PI*(1.-PR))
      CONS=E/(1.+PR)
      PR1=1.-2.*PR
      PR2=2.*(1.-PR)
C
C     DEFINE LOCATIONS, SIZES, ORIENTATIONS AND BOUNDARY CONDITIONS OF
C      BOUNDARY ELEMENTS.
C
      NUMBE=0
      DO 110 N=1,NUMBS
      READ (5,14) NUM,XBEG,YBEG,XEND,YEND,KODE,BVS,BVN
      XD=(XEND-XBEG)/NUM
      YD=(YEND-YBEG)/NUM
      SW=SQRT(XD*XD+YD*YD)
C
      DO 110 NE=1,NUM
      NUMBE=NUMBE+1
      M=NUMBE
```

```
      XM(M)=XBEG+0.5*(2.*NE-1.)*XD
      YM(M)=YBEG+0.5*(2.*NE-1.)*YD
      A(M)=0.5*SW
      SINBET(M)=YD/SW
      COSBET(M)=XD/SW
      KOD(M)=KODE
      MN=2*M
      MS=MN-1
      B(MS)=BVS
  110 B(MN)=BVN
C
      WRITE (6,13)
      DO 115 M=1,NUMBE
      SIZE=2.*A(M)
      ANGLE=180.*ATAN2(SINBET(M),COSBET(M))/PI
      WRITE (6,15) M,KOD(M),XM(M),YM(M),SIZE,ANGLE,B(2*M-1),B(2*M)
  115 CONTINUE
C
C     ADJUST STRESS BOUNDARY VALUES TO ACCOUNT FOR INITIAL STRESSES.
C
      DO 150 N=1,NUMBE
      NN=2*N
      NS=NN-1
      COSB=COSBET(N)
      SINB=SINBET(N)
      SIGS=(PYY-PXX)*SINB*COSB+PXY*(COSB*COSB-SINB*SINB)
      SIGN=PXX*SINB*SINB-2.*PXY*SINB*COSB+PYY*COSB*COSB
      GO TO (120,150,130,140),KOD(N)
  120 B(NS)=B(NS)-SIGS
      B(NN)=B(NN)-SIGN
      GO TO 150
  130 B(NN)=B(NN)-SIGN
      GO TO 150
  140 B(NS)=B(NS)-SIGS
  150 CONTINUE
C
C     COMPUTE INFLUENCE COEFFICIENTS AND SET UP SYSTEM OF ALGEBRAIC
C      EQUATIONS.
C
      DO 300 I=1,NUMBE
      IN=2*I
      IS=IN-1
      XI=XM(I)
      YI=YM(I)
      COSBI=COSBET(I)
      SINBI=SINBET(I)
      KODE=KOD(I)
C
      DO 300 J=1,NUMBE
      JN=2*J
      JS=JN-1
```

```
      CALL INITL
      XJ=XM(J)
      YJ=YM(J)
      COSBJ=COSBET(J)
      SINBJ=SINBET(J)
      AJ=A(J)
      CALL COEFF(XI,YI,XJ,YJ,AJ,COSBJ,SINBJ,+1)
      GO TO (240,210,220,230),KSYM
C
  210 XJ=2.*XSYM-XM(J)
      CALL COEFF(XI,YI,XJ,YJ,AJ,COSBJ,-SINBJ,-1)
      GO TO 240
C
  220 YJ=2.*YSYM-YM(J)
      CALL COEFF(XI,YI,XJ,YJ,AJ,-COSBJ,SINBJ,-1)
      GO TO 240
C
  230 XJ=2.*XSYM-XM(J)
      CALL COEFF(XI,YI,XJ,YJ,AJ,COSBJ,-SINBJ,-1)
      XJ=XM(J)
      YJ=2.*YSYM-YM(J)
      CALL COEFF(XI,YI,XJ,YJ,AJ,-COSBJ,SINBJ,-1)
      XJ=2.*XSYM-XM(J)
      CALL COEFF(XI,YI,XJ,YJ,AJ,-COSBJ,-SINBJ,+1)

  240 CONTINUE
      GO TO (250,260,270,280),KODE
C
  250 C(IS,JS)=(SYYS-SXXS)*SINBI*COSBI+SXYS*(COSBI*COSBI-SINBI*SINBI)
      C(IS,JN)=(SYYN-SXXN)*SINBI*COSBI+SXYN*(COSBI*COSBI-SINBI*SINBI)
      C(IN,JS)=SXXS*SINBI*SINBI-2.*SXYS*SINBI*COSBI+SYYS*COSBI*COSBI
      C(IN,JN)=SXXN*SINBI*SINBI-2.*SXYN*SINBI*COSBI+SYYN*COSBI*COSBI
      GO TO 300
C
  260 C(IS,JS)=UXS*COSBI+UYS*SINBI
      C(IS,JN)=UXN*COSBI+UYN*SINBI
      C(IN,JS)=-UXS*SINBI+UYS*COSBI
      C(IN,JN)=-UXN*SINBI+UYN*COSBI
      GO TO 300
C
  270 C(IS,JS)=UXS*COSBI+UYS*SINBI
      C(IS,JN)=UXN*COSBI+UYN*SINBI
      C(IN,JS)=SXXS*SINBI*SINBI-2.*SXYS*SINBI*COSBI+SYYS*COSBI*COSBI
      C(IN,JN)=SXXN*SINBI*SINBI-2.*SXYN*SINBI*COSBI+SYYN*COSBI*COSBI
      GO TO 300
C
  280 C(IS,JS)=(SYYS-SXXS)*SINBI*COSBI+SXYS*(COSBI*COSBI-SINBI*SINBI)
      C(IS,JN)=(SYYN-SXXN)*SINBI*COSBI+SXYN*(COSBI*COSBI-SINBI*SINBI)
      C(IN,JS)=-UXS*SINBI+UYS*COSBI
      C(IN,JN)=-UXN*SINBI+UYN*COSBI
C
```

```
  300 CONTINUE
C
C     SOLVE SYSTEM OF ALGEBRAIC EQUATIONS.
C
      N=2*NUMBE
      CALL SOLVE(N)
C
C     COMPUTE BOUNDARY DISPLACEMENTS AND STRESSES.
C
      WRITE (6,16)
      DO 600 I=1,NUMBE
      IN=2*I
      IS=IN-1
      XI=XM(I)
      YI=YM(I)
      COSBI=COSBET(I)
      SINBI=SINBET(I)
C
      UXNEG=0.
      UYNEG=0.
      SIGXX=PXX
      SIGYY=PYY
      SIGXY=PXY
C
      DO 570 J=1,NUMBE
      JN=2*J
      JS=JN-1
      CALL INITL
      XJ=XM(J)
      YJ=YM(J)
      AJ=A(J)
      COSBJ=COSBET(J)
      SINBJ=SINBET(J)
      CALL COEFF(XI,YI,XJ,YJ,AJ,COSBJ,SINBJ,+1)
      GO TO (540,510,520,530),KSYM
C
  510 XJ=2.*XSYM-XM(J)
      CALL COEFF(XI,YI,XJ,YJ,AJ,COSBJ,-SINBJ,-1)
      GO TO 540
C
  520 YJ=2.*YSYM-YM(J)
      CALL COEFF(XI,YI,XJ,YJ,AJ,-COSBJ,SINBJ,-1)
      GO TO 540
C
  530 XJ=2.*XSYM-XM(J)
      CALL COEFF(XI,YI,XJ,YJ,AJ,COSBJ,-SINBJ,-1)
      XJ=XM(J)
      YJ=2.*YSYM-YM(J)
      CALL COEFF(XI,YI,XJ,YJ,AJ,-COSBJ,SINBJ,-1)
      XJ=2.*XSYM-XM(J)
      CALL COEFF(XI,YI,XJ,YJ,AJ,-COSBJ,-SINBJ,+1)
```

```
C
  540 CONTINUE
C
      UXNEG=UXNEG+UXS*D(JS)+UXN*D(JN)
      UYNEG=UYNEG+UYS*D(JS)+UYN*D(JN)
      SIGXX=SIGXX+SXXS*D(JS)+SXXN*D(JN)
      SIGYY=SIGYY+SYYS*D(JS)+SYYN*D(JN)
      SIGXY=SIGXY+SXYS*D(JS)+SXYN*D(JN)
C
  570 CONTINUE
C
      USNEG=UXNEG*COSBI+UYNEG*SINBI
      UNNEG=-UXNEG*SINBI+UYNEG*COSBI
      USPOS=USNEG-D(IS)
      UNPOS=UNNEG-D(IN)
      UXPOS=USPOS*COSBI-UNPOS*SINBI
      UYPOS=USPOS*SINBI+UNPOS*COSBI
      SIGS=(SIGYY-SIGXX)*SINBI*COSBI+SIGXY*(COSBI*COSBI-SINBI*SINBI)
      SIGN=SIGXX*SINBI*SINBI-2.*SIGXY*SINBI*COSBI+SIGYY*COSBI*COSBI
C
      WRITE (6,17) I,D(IS),USNEG,USPOS,D(IN),UNNEG,UNPOS,UXNEG,UYNEG,
     1             UXPOS,UYPOS,SIGS,SIGN
C
  600 CONTINUE
C
C     COMPUTE DISPLACEMENTS AND STRESSES AT SPECIFIED POINTS IN BODY.
C
      IF (NUMOS.LE.0) GO TO 900
      NPOINT=0
      DO 900 N=1,NUMOS
      READ (5,19) XBEG,YBEG,XEND,YEND,NUMPB,KTYPE
      IF (KTYPE.EQ.0) WRITE (6,22)
      IF (KTYPE.EQ.1) WRITE (6,18)
      NUMP=NUMPB+1
      DELX=(XEND-XBEG)/NUMP
      DELY=(YEND-YBEG)/NUMP
      IF (NUMPB.GT.0) NUMP=NUMP+1
      IF (DELX**2+DELY**2.EQ.0.) NUMP=1
C
      ANGLE=ATAN2(YEND-YBEG,XEND-XBEG)
C
      DO 890 NI=1,NUMP
      XP=XBEG+(NI-1)*DELX
      YP=YBEG+(NI-1)*DELY
C
      UX=0.
      UY=0.
      SIGXX=PXX
      SIGYY=PYY
      SIGXY=PXY
C
```

```
      DO 880 J=1,NUMBE
      JN=2*J
      JS=JN-1
      CALL INITL
      XJ=XM(J)
      YJ=YM(J)
      AJ=A(J)
C
      IF (SQRT((XP-XJ)**2+(YP-YJ)**2).LT.2.*AJ) GO TO 890
      IF (KTYPE.EQ.1) R=SQRT((XP-XBEG)*(XP-XBEG)+(YP-YBEG)*(YP-YBEG))
C
      COSBJ=COSBET(J)
      SINBJ=SINBET(J)
      CALL COEFF(XP,YP,XJ,YJ,AJ,COSBJ,SINBJ,+1)
      GO TO (840,810,820,830),KSYM
C
  810 XJ=2.*XSYM-XM(J)
      CALL COEFF(XP,YP,XJ,YJ,AJ,COSBJ,-SINBJ,-1)
      GO TO 840
C
  820 YJ=2.*YSYM-YM(J)
      CALL COEFF(XP,YP,XJ,YJ,AJ,-COSBJ,SINBJ,-1)
      GO TO 840
C
  830 XJ=2.*XSYM-XM(J)
      CALL COEFF(XP,YP,XJ,YJ,AJ,COSBJ,-SINBJ,-1)
      XJ=XM(J)
      YJ=2.*YSYM-YM(J)
      CALL COEFF(XP,YP,XJ,YJ,AJ,-COSBJ,SINBJ,-1)
      XJ=2.*XSYM-XM(J)
      CALL COEFF(XP,YP,XJ,YJ,AJ,-COSBJ,-SINBJ,+1)
C
  840 CONTINUE
C
      UX=UX+UXS*D(JS)+UXN*D(JN)
      UY=UY+UYS*D(JS)+UYN*D(JN)
      SIGXX=SIGXX+SXXS*D(JS)+SXXN*D(JN)
      SIGYY=SIGYY+SYYS*D(JS)+SYYN*D(JN)
      SIGXY=SIGXY+SXYS*D(JS)+SXYN*D(JN)
C
  880 CONTINUE
C
      NPOINT=NPOINT+1
      IF (KTYPE.EQ.1) GO TO 885
      WRITE (6,20) NPOINT,XP,YP,UX,UY,SIGXX,SIGYY,SIGXY
      GO TO 890
  885 RAD=SQRT((SIGXX-SIGYY)*(SIGXX-SIGYY)/4.+SIGXY*SIGXY)
      ANG=PI-ATAN2(-2.*SIGXY,SIGXX-SIGYY)-2.*ANGLE
      SIG2=(SIGXX+SIGYY)/2.+RAD*COS(ANG)
```

```
      SIG12=-RAD*SIN(ANG)
      SIF1=SQRT(2.*PI*R)*SIG2
      SIF2=SQRT(2.*PI*R)*SIG12
      WRITE (6,20) NPOINT,XP,YP,UX,UY,SIGXX,SIGYY,SIGXY,SIF1,SIF2
C
  890 CONTINUE
C
  900 CONTINUE
C
C     FORMAT STATEMENTS.
C
    1 FORMAT (20A4)
    2 FORMAT (1H1,/,25X,20A4,/)
    3 FORMAT (3I4)
    4 FORMAT (F6.2,E11.4,2F12.4)
    5 FORMAT (3E11.4)
    6 FORMAT (/,109H NUMBER OF STRAIGHT-LINE SEGMENTS (EACH CONTAINING A
     1T LEAST ONE BOUNDARY ELEMENT) USED TO DEFINE BOUNDARIES =,I3,//,12
     23H NUMBER OF STRAIGHT-LINE SEGMENTS USED TO SPECIFY OTHER LOCATION
     3S (I.E., NOT ON A BOUNDARY) WHERE RESULTS ARE TO BE FOUND =,I3)
    7 FORMAT (/,32H NO SYMMETRY CONDITIONS IMPOSED.)
    8 FORMAT (/,18H THE LINE X = XS =,F12.4,23H IS A LINE OF SYMMETRY.)
    9 FORMAT (/,18H THE LINE Y = YS =,F12.4,23H IS A LINE OF SYMMETRY.)
   10 FORMAT (/,19H THE LINES X = XX =,F12.4,13H AND Y = YS =,F12.4,
     1 ,23H ARE LINES OF SYMMETRY.)
   11 FORMAT (/,18H POISSON'S RATIO =,F6.2,//,18H YOUNG'S MODULUS =,E11.
     14)
   12 FORMAT (/,31H XX-COMPONENT OF FIELD STRESS =,E11.4,//,31H YY-COMPO
     1NENT OF FIELD STRESS =,E11.4,//,31H XY-COMPONENT OF FIELD STRESS =
     2,E11.4)
   13 FORMAT (1H1,/,27H     BOUNDARY ELEMENT DATA.,//,96H  ELEMENT     K
     1ODE  X (CENTER)  Y (CENTER)      LENGTH       ANGLE  US OR SIGMA-S
     2  UN OR SIGMA-N,/)
   14 FORMAT (I4,4F12.4,I4,2E11.4)
   15 FORMAT (2I9,3F12.4,F12.2,2E15.4)
   16 FORMAT (1H1,/,66H     DISPLACEMENTS AND STRESSES AT MIDPOINTS OF B
     1OUNDARY ELEMENTS.,//,40H   ELEMENT        DS      US(-)      US(+),
     2 60H        DN      UN(-)      UN(+)      UX(-)      UY(-)      UX(+),
     3 30H      UY(+)   SIGMA-S   SIGMA-N,/)
   17 FORMAT (I10,10F10.6,2F10.1)
   18 FORMAT (1H1,/,63H    DISPLACEMENTS AND STRESSES AT SPECIFIED POINT
     1S IN THE BODY.,//,117H    POINT    X CO-ORD    Y CO-ORD          U
     2X          UY        SIGXX        SIGYY        SIGXY          KI
     3    KII,/)
   19 FORMAT (4F12.4,2I4)
   20 FORMAT (I9,2F12.4,2F12.6,5F12.1)
   22 FORMAT (1H1,/,63H    DISPLACEMENTS AND STRESSES AT SPECIFIED POINT
     1S IN THE BODY.,//,93H    POINT    X CO-ORD    Y CO-ORD          UX
     2          UY        SIGXX        SIGYY        SIGXY,/)
C
      CLOSE (5)
```

```
      CLOSE (6)
      END
      SUBROUTINE INITL
C
      COMMON/S2/SXXS,SXXN,SYYS,SYYN,SXYS,SXYN,UXS,UXN,UYS,UYN
C
      SXXS=0.
      SXXN=0.
      SYYS=0.
      SYYN=0.
      SXYS=0.
      SXYN=0.
C
      UXS=0.
      UXN=0.
      UYS=0.
      UYN=0.
C
      RETURN
      END
      SUBROUTINE COEFF(X,Y,CX,CY,A,COSB,SINB,MSYM)
C
      COMMON/S1/PI,PR,PR1,PR2,CON,CONS
      COMMON/S2/SXXS,SXXN,SYYS,SYYN,SXYS,SXYN,UXS,UXN,UYS,UYN
C
      COS2B=COSB*COSB-SINB*SINB
      SIN2B=2.*SINB*COSB
      COSB2=COSB*COSB
      SINB2=SINB*SINB
C
      XB=(X-CX)*COSB+(Y-CY)*SINB
      YB=-(X-CX)*SINB+(Y-CY)*COSB
C
      R1S=(XB-A)*(XB-A)+YB*YB
      R2S=(XB+A)*(XB+A)+YB*YB
      FL1=0.5*ALOG(R1S)
      FL2=0.5*ALOG(R2S)
      FB2=CON*(FL1-FL2)
      IF (YB.NE.0.) GO TO 10
      FB3=0.
      IF (ABS(XB).LT.A) FB3=CON*PI
      GO TO 20
   10 FB3=-CON*(ATAN((XB+A)/YB)-ATAN((XB-A)/YB))
   20 FB4=CON*(YB/R1S-YB/R2S)
      FB5=CON*((XB-A)/R1S-(XB+A)/R2S)
      FB6=CON*(((XB-A)**2-YB*YB)/R1S**2-((XB+A)**2-YB*YB)/R2S**2)
      FB7=2.*CON*YB*((XB-A)/R1S**2-(XB+A)/R2S**2)
C
      UXDS=-PR1*SINB*FB2+PR2*COSB*FB3+YB*(SINB*FB4-COSB*FB5)
      UXDN=-PR1*COSB*FB2-PR2*SINB*FB3-YB*(COSB*FB4+SINB*FB5)
      UYDS=PR1*COSB*FB2+PR2*SINB*FB3-YB*(COSB*FB4+SINB*FB5)
```

```
      UYDN=-PR1*SINB*FB2+PR2*COSB*FB3-YB*(SINB*FB4-COSB*FB5)
C
      SXXDS=CONS*(2.*COSB2*FB4+SIN2B*FB5+YB*(COS2B*FB6-SIN2B*FB7))
      SXXDN=CONS*(-FB5+YB*(SIN2B*FB6+COS2B*FB7))
      SYYDS=CONS*(2.*SINB2*FB4-SIN2B*FB5-YB*(COS2B*FB6-SIN2B*FB7))
      SYYDN=CONS*(-FB5-YB*(SIN2B*FB6+COS2B*FB7))
      SXYDS=CONS*(SIN2B*FB4-COS2B*FB5+YB*(SIN2B*FB6+COS2B*FB7))
      SXYDN=CONS*(-YB*(COS2B*FB6-SIN2B*FB7))
C
      UXS=UXS+MSYM*UXDS
      UXN=UXN+UXDN
      UYS=UYS+MSYM*UYDS
      UYN=UYN+UYDN
C
      SXXS=SXXS+MSYM*SXXDS
      SXXN=SXXN+SXXDN
      SYYS=SYYS+MSYM*SYYDS
      SYYN=SYYN+SYYDN
      SXYS=SXYS+MSYM*SXYDS
      SXYN=SXYN+SXYDN
C
      RETURN
      END
      SUBROUTINE SOLVE(N)
C
      COMMON/S3/A(1600,1600),B(1600),X(1600)
C
      NB=N-1
      DO 20 J=1,NB
      L=J+1
      DO 20 JJ=L,N
      XM=A(JJ,J)/A(J,J)
      DO 10 I=J,N
   10 A(JJ,I)=A(JJ,I)-A(J,I)*XM
   20 B(JJ)=B(JJ)-B(J)*XM
C
      X(N)=B(N)/A(N,N)
      DO 40 J=1,NB
      JJ=N-J
      L=JJ+1
      SUM=0.
      DO 30 I=L,N
   30 SUM=SUM+A(JJ,I)*X(I)
   40 X(JJ)=(B(JJ)-SUM)/A(JJ,JJ)
C
      RETURN
      END
```

Appendix D: Program TWODDO

NOTE: Most of the information in this appendix is taken directly from Crouch and Starfield (Reference 7) with only slight modification.

1. Input (Data) Deck

Program TWODDO requires the following six sets of cards:

Set 1: Free FORMAT; one card must be given (may be blank). Columns 1-80 of this card contain any desired information to identify the problem being solved.

Set 2: FORMAT (3I4); one card must be given to specify the following control parameters.

NUMBS = number of straight line boundary segments (each containing at least one boundary element) used to define boundary contours.

NUMOS = number of other line segments (not on a boundary) along which displacements, stresses, and stress intensity factors are to be computed.

KSYM =
- 1 no symmetry conditions imposed.
- 2 x=XSYM (Card 3) is a line of symmetry.
- 3 y=YSYM (Card 3) is a line of symmetry.
- 4 x=XSYM and y=YSYM (Card 3) are lines of symmetry.

Set 3: FORMAT (3E11.4,F6.2,2F12.4); one card must be given to define the elastic constants and specify the locations of lines of symmetry (if any).

E11 = Young's modulus in x-direction (E_x).

E22 = Young's modulus in y-direction (E_y).

G12 = Shear modulus for xy-direction (G_{xy}).

V12 = Poisson's ratio for xy-direction (ν_{xy}).

XSYM = location of line of symmetry parallel to y-axis (XSYM is ignored if KSYM = 1 or 3 on Card 2).

YSYM = location of line of symmetry parallel to x-axis (YSYM is ignored if KSYM = 2 or 4 on Card 2).

Set 4: FORMAT (3E11.4); one card must be given to define the initial stresses (if any) in the region of interest.

PXX = σ_{xx} at infinity.

PYY = σ_{yy} at infinity.

PXY = τ_{xy} at infinity.

Set 5: FORMAT (I4,4F12.4,I4,2E11.4); NUMBS cards must be given to define the locations and boundary conditions of the boundary elements.

NUM = number of equally spaced boundary elements along a straight line segment, all elements having the same boundary conditions.

XBEG = x-coordinate of beginning of line segment.

YBEG = y-coordinate of beginning of line segment.

XEND = x-coordinate of end of line segment.

YEND = y-coordinate of end of line segment.

$$\text{KODE} = \begin{cases} 1 & \sigma_s \text{ and } \sigma_n \text{ prescribed.} \\ 2 & u_s \text{ and } u_n \text{ prescribed.} \\ 3 & u_s \text{ and } \sigma_n \text{ prescribed.} \\ 4 & \sigma_s \text{ and } u_n \text{ prescribed.} \end{cases}$$

BVS = resultant shear stress (σ_s) or displacement (u_s).

BVN = resultant normal stress (σ_s) or displacement (u_s).

Set 6: FORMAT (4F12.4,2I4); NUMOS cards must be given to define locations of points inside the region of interest where displacements, stresses, and stress intensity factors are to be computed.

XBEG = x-coordinate of first point on line.

YBEG = y-coordinate of first point on line.

XEND = x-coordinate of last point on line.

YEND = y-coordinate of last point on line.

NUMPB = number of equally spaced points between the specified first and last points.

$$\text{KTYPE} = \begin{cases} 0 & \text{compute displacements and stresses only.} \\ 1 & \text{compute stress intensity factors as well.} \end{cases}$$

Note: If KTYPE=1, (XBEG,YBEG) must be the location of a crack tip, and the line defined by (XEND,YEND) must extend in the direction of the crack in order for the computed stress intensity factors to have any meaning.

2. Program TWODDO Listing

```
      PROGRAM TWODDO
C
      COMMON/S1/PI,CON1,CON2,G1,G2,C11,C22,C12,G12
      COMMON/S2/SXXS,SXXN,SYYS,SYYN,SXYS,SXYN,UXS,UXN,UYS,UYN
      COMMON/S3/C(1600,1600),B(1600),D(1600)
C
      DIMENSION XM(800),YM(800),A(800),COSBET(800),SINBET(800),KOD(800)
      DIMENSION TITLE(20)
C
      OPEN (UNIT=5,FILE='TWODDO.DAT',STATUS='OLD')
      OPEN (UNIT=6,FILE='TWODDO.LIS',STATUS='NEW')
      READ (5,1) (TITLE(I),I=1,20)
      WRITE (6,2) (TITLE(I),I=1,20)
      READ (5,3) NUMBS,NUMOS,KSYM
      READ (5,4) E11,E22,G12,V12,XSYM,YSYM
      READ (5,5) PXX,PYY,PXY
      WRITE (6,6) NUMBS,NUMOS
      GO TO (80,85,90,95),KSYM
   80 WRITE (6,7)
      GO TO 100
   85 WRITE (6,8) XSYM
      GO TO 100
   90 WRITE (6,9) YSYM
      GO TO 100
   95 WRITE (6,10) XSYM,YSYM
C
  100 CONTINUE
      WRITE (6,11) E11,E22,G12,V12
      WRITE (6,12) PXX,PYY,PXY
C
      PI=4.*ATAN(1.)
      CON=1.-V12*V12*E22/E11
      CON1=E11*G12
      CON2=V12*E22*(V12*E22/CON+2.*G12)-E11*E22/CON
      CON3=E22*G12
      G1=SQRT((-CON2+SQRT(CON2*CON2-4.*CON1*CON3))/2./CON1)
      G2=SQRT((-CON2-SQRT(CON2*CON2-4.*CON1*CON3))/2./CON1)
      C11=E11/CON
      C22=E22/CON
      C12=V12*C22
      CON1=(C11*G1*G1-G12)/(C12+G12)
      CON2=G1*G2/2./PI/(CON1*G2-G1/CON1)
C
C     DEFINE LOCATIONS, SIZES, ORIENTATIONS AND BOUNDARY CONDITIONS OF
C      BOUNDARY ELEMENTS.
C
      NUMBE=0
      DO 110 N=1,NUMBS
      READ (5,14) NUM,XBEG,YBEG,XEND,YEND,KODE,BVS,BVN
      XD=(XEND-XBEG)/NUM
```

```
      YD=(YEND-YBEG)/NUM
      SW=SQRT(XD*XD+YD*YD)
C
      DO 110 NE=1,NUM
      NUMBE=NUMBE+1
      M=NUMBE
      XM(M)=XBEG+0.5*(2.*NE-1.)*XD
      YM(M)=YBEG+0.5*(2.*NE-1.)*YD
      A(M)=0.5*SW
      SINBET(M)=YD/SW
      COSBET(M)=XD/SW
      KOD(M)=KODE
      MN=2*M
      MS=MN-1
      B(MS)=BVS
  110 B(MN)=BVN
C
      WRITE (6,13)
      DO 115 M=1,NUMBE
      SIZE=2.*A(M)
      ANGLE=180.*ATAN2(SINBET(M),COSBET(M))/PI
      WRITE (6,15) M,KOD(M),XM(M),YM(M),SIZE,ANGLE,B(2*M-1),B(2*M)
  115 CONTINUE
C
C     ADJUST STRESS BOUNDARY VALUES TO ACCOUNT FOR INITIAL STRESSES.
C
      DO 150 N=1,NUMBE
      NN=2*N
      NS=NN-1
      COSB=COSBET(N)
      SINB=SINBET(N)
      SIGS=(PYY-PXX)*SINB*COSB+PXY*(COSB*COSB-SINB*SINB)
      SIGN=PXX*SINB*SINB-2.*PXY*SINB*COSB+PYY*COSB*COSB
      GO TO (120,150,130,140),KOD(N)
  120 B(NS)=B(NS)-SIGS
      B(NN)=B(NN)-SIGN
      GO TO 150
  130 B(NN)=B(NN)-SIGN
      GO TO 150
  140 B(NS)=B(NS)-SIGS
  150 CONTINUE
C
C     COMPUTE INFLUENCE COEFFICIENTS AND SET UP SYSTEM OF ALGEBRAIC
C      EQUATIONS.
C
      DO 300 I=1,NUMBE
      IN=2*I
      IS=IN-1
      XI=XM(I)
      YI=YM(I)
      COSBI=COSBET(I)
      SINBI=SINBET(I)
```

```
      KODE=KOD(I)
C
      DO 300 J=1,NUMBE
      JN=2*J
      JS=JN-1
      CALL INITL
      XJ=XM(J)
      YJ=YM(J)
      COSBJ=COSBET(J)
      SINBJ=SINBET(J)
      AJ=A(J)
      CALL COEFF(XI,YI,XJ,YJ,AJ,COSBJ,SINBJ,+1)
      GO TO (240,210,220,230),KSYM
C
  210 XJ=2.*XSYM-XM(J)
      CALL COEFF(XI,YI,XJ,YJ,AJ,COSBJ,-SINBJ,-1)
      GO TO 240
C
  220 YJ=2.*YSYM-YM(J)
      CALL COEFF(XI,YI,XJ,YJ,AJ,-COSBJ,SINBJ,-1)
      GO TO 240
C
  230 XJ=2.*XSYM-XM(J)
      CALL COEFF(XI,YI,XJ,YJ,AJ,COSBJ,-SINBJ,-1)
      XJ=XM(J)
      YJ=2.*YSYM-YM(J)
      CALL COEFF(XI,YI,XJ,YJ,AJ,-COSBJ,SINBJ,-1)
      XJ=2.*XSYM-XM(J)
      CALL COEFF(XI,YI,XJ,YJ,AJ,-COSBJ,-SINBJ,+1)
C
  240 CONTINUE
      GO TO (250,260,270,280),KODE
C
  250 C(IS,JS)=(SYYS-SXXS)*SINBI*COSBI+SXYS*(COSBI*COSBI-SINBI*SINBI)
      C(IS,JN)=(SYYN-SXXN)*SINBI*COSBI+SXYN*(COSBI*COSBI-SINBI*SINBI)
      C(IN,JS)=SXXS*SINBI*SINBI-2.*SXYS*SINBI*COSBI+SYYS*COSBI*COSBI
      C(IN,JN)=SXXN*SINBI*SINBI-2.*SXYN*SINBI*COSBI+SYYN*COSBI*COSBI
      GO TO 300
C
  260 C(IS,JS)=UXS*COSBI+UYS*SINBI
      C(IS,JN)=UXN*COSBI+UYN*SINBI
      C(IN,JS)=-UXS*SINBI+UYS*COSBI
      C(IN,JN)=-UXN*SINBI+UYN*COSBI
      GO TO 300
C
  270 C(IS,JS)=UXS*COSBI+UYS*SINBI
      C(IS,JN)=UXN*COSBI+UYN*SINBI
      C(IN,JS)=SXXS*SINBI*SINBI-2.*SXYS*SINBI*COSBI+SYYS*COSBI*COSBI
      C(IN,JN)=SXXN*SINBI*SINBI-2.*SXYN*SINBI*COSBI+SYYN*COSBI*COSBI
      GO TO 300
C
  280 C(IS,JS)=(SYYS-SXXS)*SINBI*COSBI+SXYS*(COSBI*COSBI-SINBI*SINBI)
```

```
      C(IS,JN)=(SYYN-SXXN)*SINBI*COSBI+SXYN*(COSBI*COSBI-SINBI*SINBI)
      C(IN,JS)=-UXS*SINBI+UYS*COSBI
      C(IN,JN)=-UXN*SINBI+UYN*COSBI
C
  300 CONTINUE
C
C     SOLVE SYSTEM OF ALGEBRAIC EQUATIONS.
C
      N=2*NUMBE
      CALL SOLVE(N)
C
C     COMPUTE BOUNDARY DISPLACEMENTS AND STRESSES.
C
      WRITE (6,16)
      DO 600 I=1,NUMBE
      IN=2*I
      IS=IN-1
      XI=XM(I)
      YI=YM(I)
      COSBI=COSBET(I)
      SINBI=SINBET(I)
C
      UXNEG=0.
      UYNEG=0.
      SIGXX=PXX
      SIGYY=PYY
      SIGXY=PXY
C
      DO 570 J=1,NUMBE
      JN=2*J
      JS=JN-1
      CALL INITL
      XJ=XM(J)
      YJ=YM(J)
      AJ=A(J)
      COSBJ=COSBET(J)
      SINBJ=SINBET(J)
      CALL COEFF(XI,YI,XJ,YJ,AJ,COSBJ,SINBJ,+1)
      GO TO (540,510,520,530),KSYM
C
  510 XJ=2.*XSYM-XM(J)
      CALL COEFF(XI,YI,XJ,YJ,AJ,COSBJ,-SINBJ,-1)
      GO TO 540
C
  520 YJ=2.*YSYM-YM(J)
      CALL COEFF(XI,YI,XJ,YJ,AJ,-COSBJ,SINBJ,-1)
      GO TO 540
C
  530 XJ=2.*XSYM-XM(J)
      CALL COEFF(XI,YI,XJ,YJ,AJ,COSBJ,-SINBJ,-1)
      XJ=XM(J)
      YJ=2.*YSYM-YM(J)
```

```
      CALL COEFF(XI,YI,XJ,YJ,AJ,-COSBJ,SINBJ,-1)
      XJ=2.*XSYM-XM(J)
      CALL COEFF(XI,YI,XJ,YJ,AJ,-COSBJ,-SINBJ,+1)
C
  540 CONTINUE
C
      UXNEG=UXNEG+UXS*D(JS)+UXN*D(JN)
      UYNEG=UYNEG+UYS*D(JS)+UYN*D(JN)
      SIGXX=SIGXX+SXXS*D(JS)+SXXN*D(JN)
      SIGYY=SIGYY+SYYS*D(JS)+SYYN*D(JN)
      SIGXY=SIGXY+SXYS*D(JS)+SXYN*D(JN)
C
  570 CONTINUE
C
      USNEG=UXNEG*COSBI+UYNEG*SINBI
      UNNEG=-UXNEG*SINBI+UYNEG*COSBI
      USPOS=USNEG-D(IS)
      UNPOS=UNNEG-D(IN)
      UXPOS=USPOS*COSBI-UNPOS*SINBI
      UYPOS=USPOS*SINBI+UNPOS*COSBI
      SIGS=(SIGYY-SIGXX)*SINBI*COSBI+SIGXY*(COSBI*COSBI-SINBI*SINBI)
      SIGN=SIGXX*SINBI*SINBI-2.*SIGXY*SINBI*COSBI+SIGYY*COSBI*COSBI
C
      WRITE (6,17) I,D(IS),USNEG,USPOS,D(IN),UNNEG,UNPOS,UXNEG,UYNEG,
     1             UXPOS,UYPOS,SIGS,SIGN
C
  600 CONTINUE
C
C     COMPUTE DISPLACEMENTS AND STRESSES AT SPECIFIED POINTS IN BODY.
C
      IF (NUMOS.LE.0) GO TO 900
      NPOINT=0
      DO 900 N=1,NUMOS
      READ (5,19) XBEG,YBEG,XEND,YEND,NUMPB,KTYPE
      IF (KTYPE.EQ.0) WRITE (6,22)
      IF (KTYPE.EQ.1) WRITE (6,18)
      NUMP=NUMPB+1
      DELX=(XEND-XBEG)/NUMP
      DELY=(YEND-YBEG)/NUMP
      IF (NUMPB.GT.0) NUMP=NUMP+1
      IF (DELX**2+DELY**2.EQ.0.) NUMP=1
C
      ANGLE=ATAN2(YEND-YBEG,XEND-XBEG)
C
      DO 890 NI=1,NUMP
      XP=XBEG+(NI-1)*DELX
      YP=YBEG+(NI-1)*DELY
C
      UX=0.
      UY=0.
      SIGXX=PXX
      SIGYY=PYY
```

```
      SIGXY=PXY
C
      DO 880 J=1,NUMBE
      JN=2*J
      JS=JN-1
      CALL INITL
      XJ=XM(J)
      YJ=YM(J)
      AJ=A(J)
C
      IF (SQRT((XP-XJ)**2+(YP-YJ)**2).LT.2.*AJ) GO TO 890
      IF (KTYPE.EQ.1) R=SQRT((XP-XBEG)*(XP-XBEG)+(YP-YBEG)*(YP-YBEG))
C
      COSBJ=COSBET(J)
      SINBJ=SINBET(J)
      CALL COEFF(XP,YP,XJ,YJ,AJ,COSBJ,SINBJ,+1)
      GO TO (840,810,820,830),KSYM
C
  810 XJ=2.*XSYM-XM(J)
      CALL COEFF(XP,YP,XJ,YJ,AJ,COSBJ,-SINBJ,-1)
      GO TO 840
C
  820 YJ=2.*YSYM-YM(J)
      CALL COEFF(XP,YP,XJ,YJ,AJ,-COSBJ,SINBJ,-1)
      GO TO 840
C
  830 XJ=2.*XSYM-XM(J)
      CALL COEFF(XP,YP,XJ,YJ,AJ,COSBJ,-SINBJ,-1)
      XJ=XM(J)
      YJ=2.*YSYM-YM(J)
      CALL COEFF(XP,YP,XJ,YJ,AJ,-COSBJ,SINBJ,-1)
      XJ=2.*XSYM-XM(J)
      CALL COEFF(XP,YP,XJ,YJ,AJ,-COSBJ,-SINBJ,+1)
C
  840 CONTINUE
C
      UX=UX+UXS*D(JS)+UXN*D(JN)
      UY=UY+UYS*D(JS)+UYN*D(JN)
      SIGXX=SIGXX+SXXS*D(JS)+SXXN*D(JN)
      SIGYY=SIGYY+SYYS*D(JS)+SYYN*D(JN)
      SIGXY=SIGXY+SXYS*D(JS)+SXYN*D(JN)
C
  880 CONTINUE
C
      NPOINT=NPOINT+1
      IF (KTYPE.EQ.1) GO TO 885
      WRITE (6,20) NPOINT,XP,YP,UX,UY,SIGXX,SIGYY,SIGXY
      GO TO 890
  885 RAD=SQRT((SIGXX-SIGYY)*(SIGXX-SIGYY)/4.+SIGXY*SIGXY)
      ANG=PI-ATAN2(-2.*SIGXY,SIGXX-SIGYY)-2.*ANGLE
      SIG2=(SIGXX+SIGYY)/2.+RAD*COS(ANG)
      SIG12=-RAD*SIN(ANG)
```

```
      SIF1=SQRT(2.*PI*R)*SIG2
      SIF2=SQRT(2.*PI*R)*SIG12
      WRITE (6,20) NPOINT,XP,YP,UX,UY,SIGXX,SIGYY,SIGXY,SIF1,SIF2
C
  890 CONTINUE
C
  900 CONTINUE
C
C     FORMAT STATEMENTS.
C
    1 FORMAT (20A4)
    2 FORMAT (1H1,/,25X,20A4,/)
    3 FORMAT (3I4)
    4 FORMAT (3E11.4,F6.2,2F12.4)
    5 FORMAT (3E11.4)
    6 FORMAT (/,109H NUMBER OF STRAIGHT-LINE SEGMENTS (EACH CONTAINING A
     1T LEAST ONE BOUNDARY ELEMENT) USED TO DEFINE BOUNDARIES =,I3,//,12
     23H NUMBER OF STRAIGHT-LINE SEGMENTS USED TO SPECIFY OTHER LOCATION
     3S (I.E., NOT ON A BOUNDARY) WHERE RESULTS ARE TO BE FOUND =,I3)
    7 FORMAT (/,32H NO SYMMETRY CONDITIONS IMPOSED.)
    8 FORMAT (/,18H THE LINE X = XS =,F12.4,23H IS A LINE OF SYMMETRY.)
    9 FORMAT (/,18H THE LINE Y = YS =,F12.4,23H IS A LINE OF SYMMETRY.)
   10 FORMAT (/,19H THE LINES X = XS =,F12.4,13H AND Y = YS =,F12.4,
     1 23H ARE LINES OF SYMMETRY.)
   11 FORMAT (/,14H MODULUS EXX =,E11.4,/,14H MODULUS EYY =,E11.4,/,14H
     '1MODULUS GXY =,E11.4,//,20H POISSON RATIO VXY =,F6.2)
   12 FORMAT (/,31H XX-COMPONENT OF FIELD STRESS =,E11.4,//,31H YY-COMPO
     1NENT OF FIELD STRESS =,E11.4,//,31H XY-COMPONENT OF FIELD STRESS =
     2,E11.4)
   13 FORMAT (1H1,/,27H     BOUNDARY ELEMENT DATA.,//,96H  ELEMENT     K
     1ODE  X (CENTER)  Y (CENTER)      LENGTH       ANGLE  US OR SIGMA-S
     2  UN OR SIGMA-N,/)
   14 FORMAT (I4,4F12.4,I4,2E11.4)
   15 FORMAT (2I9,3F12.4,F12.2,2E15.4)
   16 FORMAT (1H1,/,66H     DISPLACEMENTS AND STRESSES AT MIDPOINTS OF B
     1OUNDARY ELEMENTS.,//,40H   ELEMENT        DS      US(-)      US(+),
     2 60H        DN      UN(-)      UN(+)      UX(-)      UY(-)      UX(+),
     3 30H      UY(+)    SIGMA-S    SIGMA-N,/)
   17 FORMAT (I10,10F10.6,2F10.1)
   18 FORMAT (1H1,/,63H    DISPLACEMENTS AND STRESSES AT SPECIFIED POINT
     1S IN THE BODY.,//,117H    POINT    X CO-ORD    Y CO-ORD          U
     2X          UY        SIGXX        SIGYY        SIGXY          KI
     3    KII,/)
   19 FORMAT (4F12.4,2I4)
   20 FORMAT (I9,2F12.4,2F12.6,5F12.1)
   22 FORMAT (1H1,/,63H    DISPLACEMENTS AND STRESSES AT SPECIFIED POINT
     1S IN THE BODY.,//,93H    POINT    X CO-ORD    Y CO-ORD          UX
     2          UY        SIGXX        SIGYY        SIGXY,/)
C
      CLOSE (5)
      CLOSE (6)
      END
```

```
      SUBROUTINE INITL
C
      COMMON/S2/SXXS,SXXN,SYYS,SYYN,SXYS,SXYN,UXS,UXN,UYS,UYN
C
      SXXS=0.
      SXXN=0.
      SYYS=0.
      SYYN=0.
      SXYS=0.
      SXYN=0.
C
      UXS=0.
      UXN=0.
      UYS=0.
      UYN=0.
C
      RETURN
      END
      SUBROUTINE COEFF(X,Y,CX,CY,A,COSB,SINB,MSYM)
C
      COMMON/S1/PI,CON1,CON2,G1,G2,C11,C22,C12,C66
      COMMON/S2/SXXS,SXXN,SYYS,SYYN,SXYS,SXYN,UXS,UXN,UYS,UYN
C
      COS2B=COSB*COSB-SINB*SINB
      SIN2B=2.*SINB*COSB
      COSB2=COSB*COSB
      SINB2=SINB*SINB
C
      XB=(X-CX)*COSB+(Y-CY)*SINB
      YB=-(X-CX)*SINB+(Y-CY)*COSB
C
      A1=(G1*G1*COSB2+SINB2)/G1/G1
      A2=(G2*G2*COSB2+SINB2)/G2/G2
      B1=(1.-G1*G1)*SIN2B/G1/G1
      B2=(1.-G2*G2)*SIN2B/G2/G2
      C1=(G1*G1*SINB2+COSB2)/G1/G1
      C2=(G2*G2*SINB2+COSB2)/G2/G2
      R1S1=A1*(XB-A)*(XB-A)+B1*(XB-A)*YB+C1*YB*YB
      R1S2=A2*(XB-A)*(XB-A)+B2*(XB-A)*YB+C2*YB*YB
      R2S1=A1*(XB+A)*(XB+A)+B1*(XB+A)*YB+C1*YB*YB
      R2S2=A2*(XB+A)*(XB+A)+B2*(XB+A)*YB+C2*YB*YB
      IF (YB.NE.0.) GO TO 10
      FB1=0.
      FB2=0.
      IF (ABS(XB).GT.A) GO TO 20
      FB1=-PI
      FB2=-PI
      GO TO 20
   10 FB1=ATAN2(YB/G1/A1,XB-A+B1*YB/A1/2.)-ATAN2(YB/G1/A1,XB+A+B1*YB/A1/
     12.)
      FB2=ATAN2(YB/G2/A2,XB-A+B2*YB/A2/2.)-ATAN2(YB/G2/A2,XB+A+B2*YB/A2/
     12.)
```

```
   20 FB3=(ALOG(R1S1/R2S1))/2.
      FB4=(ALOG(R1S2/R2S2))/2.
      R11=-YB/G1/R1S1+YB/G1/R2S1
      R12=-YB/G2/R1S2+YB/G2/R2S2
      R21=(XB-A)/G1/R1S1-(XB+A)/G1/R2S1
      R22=(XB-A)/G2/R1S2-(XB+A)/G2/R2S2
      R31=(A1*(XB-A)+B1*YB/2.)/R1S1-(A1*(XB+A)+B1*YB/2.)/R2S1
      R32=(A2*(XB-A)+B2*YB/2.)/R1S2-(A2*(XB+A)+B2*YB/2.)/R2S2
      R41=(B1*(XB-A)/2.+C1*YB)/R1S1-(B1*(XB+A)/2.+C1*YB)/R2S1
      R42=(B2*(XB-A)/2.+C2*YB)/R1S2-(B2*(XB+A)/2.+C2*YB)/R2S2
      FB5=R11/CON1/G2-R12*CON1/G1
      FB6=R21/CON1/G2-R22*CON1/G1
      FB7=R11*CON1/G1-R12/CON1/G2
      FB8=R21*CON1/G1-R22/CON1/G2
C
      UXDS=+CON2*(COSB*(FB1/CON1/G2-FB2*CON1/G1)+SINB*(FB3-FB4))
      UXDN=-CON2*(SINB*(FB1/CON1/G2-FB2*CON1/G1)-COSB*(FB3-FB4))
      UYDS=+CON2*(COSB/G1/G2*(FB3-FB4)-SINB*(FB1*CON1/G1-FB2/CON1/G2))
      UYDN=-CON2*(SINB/G1/G2*(FB3-FB4)+COSB*(FB1*CON1/G1-FB2/CON1/G2))
C
      SXXDS=+CON2*(C11*COSB*(COSB*FB5-SINB*FB6)-C12*SINB*(SINB*FB7+COSB*
     1FB8)+(C11+C12/G1/G2)*SINB*COSB*(R31-R32)-(C11*SINB2-C12*COSB2/G1/G
     22)*(R41-R42))
      SXXDN=-CON2*(C11*SINB*(COSB*FB5-SINB*FB6)+C12*COSB*(SINB*FB7+COSB*
     1FB8)-(C11*COSB2-C12*SINB2/G1/G2)*(R31-R32)+(C11+C12/G1/G2)*SINB*CO
     2SB*(R41-R42))
      SYYDS=+CON2*(C12*COSB*(COSB*FB5-SINB*FB6)-C22*SINB*(SINB*FB7+COSB*
     1FB8)+(C12+C22/G1/G2)*SINB*COSB*(R31-R32)-(C12*SINB2-C22*COSB2/G1/G
     22)*(R41-R42))
      SYYDN=-CON2*(C12*SINB*(COSB*FB5-SINB*FB6)+C22*COSB*(SINB*FB7+COSB*
     1FB8)-(C12*COSB2-C22*SINB2/G1/G2)*(R31-R32)+(C12+C22/G1/G2)*SINB*CO
     2SB*(R41-R42))
      SXYDS=+CON2*C66*(SINB*COSB*(FB5-FB7)+COSB2*FB6+SINB2*FB8+(SINB2+CO
     1SB2/G1/G2)*(R31-R32)+SINB*COSB*(1.-1./G1/G2)*(R41-R42))
      SXYDN=-CON2*C66*(SINB2*FB5+COSB2*FB7+SINB*COSB*(FB6-FB8)-SINB*COSB
     1*(1.-1./G1/G2)*(R31-R32)-(COSB2+SINB2/G1/G2)*(R41-R42))
C
      UXS=UXS+MSYM*UXDS
      UXN=UXN+UXDN
      UYS=UYS+MSYM*UYDS
      UYN=UYN+UYDN
C
      SXXS=SXXS+MSYM*SXXDS
      SXXN=SXXN+SXXDN
      SYYS=SYYS+MSYM*SYYDS
      SYYN=SYYN+SYYDN
      SXYS=SXYS+MSYM*SXYDS
      SXYN=SXYN+SXYDN
C
      RETURN
      END
      SUBROUTINE SOLVE(N)
```

```
C
      COMMON/S3/A(1600,1600),B(1600),X(1600)
C
      NB=N-1
      DO 20 J=1,NB
      L=J+1
      DO 20 JJ=L,N
      XM=A(JJ,J)/A(J,J)
      DO 10 I=J,N
   10 A(JJ,I)=A(JJ,I)-A(J,I)*XM
   20 B(JJ)=B(JJ)-B(J)*XM
C
      X(N)=B(N)/A(N,N)
      DO 40 J=1,NB
      JJ=N-J
      L=JJ+1
      SUM=0.
      DO 30 I=L,N
   30 SUM=SUM+A(JJ,I)*X(I)
   40 X(JJ)=(B(JJ)-SUM)/A(JJ,JJ)
C
      RETURN
      END
```

Bibliography

1. Beckett, R. and J. Hurt. Numerical Calculations and Algorithms. New York: McGraw-Hill Book Company, 1967.

2. Brebbia, C.A. *et al.* Boundary Element Techniques: Theory and Applications in Engineering. Heidelberg, W. Germany: Springer-Verlag Berlin, 1984.

3. Broek, David. Elementary Engineering Fracture Mechanics (Third Edition). The Hague: Martinus Nijhoff Publishers, 1982.

4. Chen, K.L. and S.N. Atluri. "A Finite-Element Alternating Method for a Cost-Effective Determination of Weight-Functions for Orthotropic Materials in Mixed-Mode Fracture," Engineering Fracture Mechanics, (submitted).

5. Cook, R.D. Concepts and Applications of Finite Element Analysis (Second Edtition). New York: John Wiley and Sons, 1981.

6. Crouch, S.L. "Solution of plane elasticity problems by the displacement discontinuity method," International Journal of Numerical Methods in Engineering, 10: 301-43 (1976).

7. Crouch, S.L. and A.M. Starfield. Boundary Element Methods in Solid Mechanics. London: George Allen and Unwin Ltd., 1983.

8. Cruse, T.A. Boundary Element Analysis in Computational Fracture Mechanics. Dordrecht, The Netherlands: Kluwer Academic Publishers, 1988.

9. Desai, C.S. Elementary Finite Element Method. Englewood Cliffs, NJ: Prentice-Hall Inc., 1979.

10. Fenner, R.T. "The Boundary Integral Equation (Boundary Element) Method in Engineering Stress Analysis," Journal of Strain Analysis, Vol 18, No 4: 199-205 (1983).

11. Harris, F.R. Two-Dimensional Elastic Analysis by the Boundary Element Method. MS Thesis, AFIT/GA/AA/86D-6. School of Engineering, Air Force Institute of Technology (AU), Wright-Patterson AFB OH, December 1986.

12. Hewlett-Packard HP-67 Standard Pac. Program Manual 00067-90021. Hewlett-Packard Company, Cupertino CA, page 03-02 (1976).

13. Jones, R.M. Mechanics of Composite Materials. New York: Hemisphere Publishing Corporation, 1975.

14. Lekhnitskii, S.G. Theory of Elasticity of an Anisotropic Elastic Body. San Francisco: Holden-Day, 1963.

15. Okada, H. *et al.* "A novel displacement gradient boundary element method for elastic stress analysis with high accuracy," Journal of Applied Mechanics, 55: 786-94 (1988).

16. Rajiyah, H. and S.N. Atluri. "Evaluation of K-Factors and Weight Functions for 2-D Mixed-Mode Multiple Cracks by the Boundary Element Alternating Method," Engineering Fracture Mechanics, Vol 32, No 6: 911-922 (1989).

17. Rizzo, F.J. "An Integral Equation Approach to Boundary Value Problems in Classical Elastostatics," Quarterly of Applied Mathematics, 25 (1967).

18. Rizzo, F.J. and D.J. Shippy. "An Advanced Boundary Integral Equation Method for 3D Thermoelasticity," International Journal for Numerical Methods in Engineering 10 (1977).

19. Rooke, D.P. and D.J. Cartwright. Compendium of Stress Intensity Factors. London: Her Majesty's Stationery Office, 1976.

20. Shi, G. and G. Bezine. "A General Boundary Integral Formulation for the Anisotropic Plate Bending Problems," Journal of Composite Materials, 22: 694-716 (August 1988).

21. Shih, K.G. and A.N. Palazotto. "Formulation of Boundary Integral Equations for Linear Elastic Shells," Computers Math. Applic., Vol 18, No 12: 985-999 (1989).

22. Snyder, M.D. and S.L. Cruse. "Boundary-Integral Equation Analysis of Cracked Anisotropic Plates," International Journal of Fracture, 11: 315-328 (1975).

23. Tan, P.W. and C.A. Bigelow. "Analysis of Cracked Laminates with Holes Using the Boundary Force Method," AIAA Journal, Vol 26, No 9: 1094-1099 (September 1988).

24. Timoshenko, S.P. and J.N. Goodier. Theory of Elasticity (Third Edition). New York: McGraw-Hill Book Company, 1970.

Vita

Captain Ralph E. Urch [redacted] He graduated from Jefferson Area High School in Jefferson, Ohio, in 1980 and attended The Ohio State University, from which he received the degree of Bachelor of Science in Aeronautical and Astronautical Engineering in June 1984. Upon graduation, he received a commission in the USAF through the ROTC program. He was assigned to Sacramento Air Logistics Center as an A-10 aircraft structures engineer from July 1984 until entering the School of Engineering, Air Force Institute of Technology, in June 1988.

[redacted]

UNCLASSIFIED
SECURITY CLASSIFICATION OF THIS PAGE

REPORT DOCUMENTATION PAGE

Form Approved
OMB No. 0704-0188

1a. REPORT SECURITY CLASSIFICATION UNCLASSIFIED	1b. RESTRICTIVE MARKINGS
2a. SECURITY CLASSIFICATION AUTHORITY	3. DISTRIBUTION/AVAILABILITY OF REPORT Approved for public release; distribution unlimited
2b. DECLASSIFICATION/DOWNGRADING SCHEDULE	
4. PERFORMING ORGANIZATION REPORT NUMBER(S) AFIT/GAE/ENY/89D-39	5. MONITORING ORGANIZATION REPORT NUMBER(S)
6a. NAME OF PERFORMING ORGANIZATION School of Engineering 6b. OFFICE SYMBOL (If applicable) AFIT/ENY	7a. NAME OF MONITORING ORGANIZATION
6c. ADDRESS (City, State, and ZIP Code) Air Force Institute of Technology Wright-Patterson AFB, OH 45433	7b. ADDRESS (City, State, and ZIP Code)
8a. NAME OF FUNDING/SPONSORING ORGANIZATION AFOSR 8b. OFFICE SYMBOL (If applicable)	9. PROCUREMENT INSTRUMENT IDENTIFICATION NUMBER
8c. ADDRESS (City, State, and ZIP Code) Air Force Office of Scientific Research Wright-Patterson AFB, OH 45433	10. SOURCE OF FUNDING NUMBERS PROGRAM ELEMENT NO. / PROJECT NO. / TASK NO. / WORK UNIT ACCESSION NO.

11. TITLE (Include Security Classification)
Validation of the Boundary Element Method Applied to Complex Fracture Mechanics Conditions

12. PERSONAL AUTHOR(S)
Ralph E. Urch, M.S., Capt, USAF

13a. TYPE OF REPORT	13b. TIME COVERED	14. DATE OF REPORT (Year, Month, Day)	15. PAGE COUNT
MS Thesis	FROM _____ TO _____	1989 December	147

16. SUPPLEMENTARY NOTATION

17. COSATI CODES

FIELD	GROUP	SUB-GROUP
20	11	
12	01	

18. SUBJECT TERMS (Continue on reverse if necessary and identify by block number)
Displacement Discontinuity Method, Orthotropic, Plane Stress

19. ABSTRACT (Continue on reverse if necessary and identify by block number)

This investigation presents analyses of several fracture mechanics problems via the Boundary Element Method. Specifically, an indirect procedure known as the Displacement Discontinuity Method was used to solve problems involving cracks in isotropic or specially orthotropic materials. Infinite as well as finite regions were considered.

A series of configurations were analyzed and compared with either analytic solutions or results from a finite element model. Agreement for the infinite-domain problems was excellent, while solutions to the finite-domain problems ranged from good to excellent.

Advantages and disadvantages of the Displacement Discontinuity Method are briefly discussed. The main advantage of the method is the requirement to model only the boundary of the problem under consideration. The major disadvantage is the time required to solve the resulting fully-populated matrix equation.

Separate FORTRAN codes are provided as appendices for the two material types --

(continued on reverse)

20. DISTRIBUTION/AVAILABILITY OF ABSTRACT ☒ UNCLASSIFIED/UNLIMITED ☐ SAME AS RPT. ☐ DTIC USERS	21. ABSTRACT SECURITY CLASSIFICATION UNCLASSIFIED
22a. NAME OF RESPONSIBLE INDIVIDUAL Anthony N. Palazotto	22b. TELEPHONE (Include Area Code) 513-255-2998 22c. OFFICE SYMBOL AFIT/ENY

DD Form 1473, JUN 86 Previous editions are obsolete.

SECURITY CLASSIFICATION OF THIS PAGE
UNCLASSIFIED