DTIC FILE COPY

Report No. CETHA-TE-CR-89004
Final Report

AD-A206 203

USATHAMA

U.S. Army Toxic and Hazardous Materials Agency

DEMONSTRATION TESTING OF PLASTIC MEDIA BLASTING (PMB) AT LETTERKENNY ARMY DEPOT

(TASK ORDER NO. 13)

January 1989
Contract No. DAAK11-85-D-0008

Best Available Copy

DTIC
ELECTE
MAR 3 0 1989
S H D

Prepared by:

Arthur D. Little, Inc.
Acorn Park
Cambridge, Massachusetts 02140-2390

Prepared for:

U.S. Army Toxic and
Hazardous Materials Agency
Process Development Branch
Aberdeen Proving Ground, MD 21010-5401

20030204143

~~DISTRIBUTION UNLIMITED~~

DISTRIBUTION STATEMENT A
Approved for public release;
Distribution Unlimited

The views, opinions, and/or findings contained in this report should not be construed as an official Department of the Army position, policy, or decision, unless so designated by other documentation.

The use of trade names in this report does not constitute an official endorsement or approval of the use of such commercial products. This report may not be cited for purposes of advertisement.

Final Report to

United States Army
Toxic and Hazardous
Materials Agency

January 1989

Demonstration Testing of Plastic Media Blasting (PMB) at Letterkenny Army Depot

(Task Order Number 13)

Final Report

A.A. Balasco - Program Manager

R.S. Lindstrom - Task Leader
C.G. d'Agincourt
C.C. Scholl
Principal Investigators

DISTRIBUTION UNLIMITED

Arthur D Little
Contract No. DAAK11-85-D-0008
Reference 54153
USATHAMA Reference CETHA-TE-CR-89004

UNCLASSIFIED
SECURITY CLASSIFICATION OF THIS PAGE

REPORT DOCUMENTATION PAGE

1a. REPORT SECURITY CLASSIFICATION UNCLASSIFIED	1b. RESTRICTIVE MARKINGS
2a. SECURITY CLASSIFICATION AUTHORITY	3. DISTRIBUTION/AVAILABILITY OF REPORT
2b. DECLASSIFICATION/DOWNGRADING SCHEDULE	Unlimited
4. PERFORMING ORGANIZATION REPORT NUMBER(S) Reference: 54153	5. MONITORING ORGANIZATION REPORT NUMBER(S) CETHA-TE-CR-89004
6a. NAME OF PERFORMING ORGANIZATION Arthur D. Little, Inc. — 6b. OFFICE SYMBOL (If applicable)	7a. NAME OF MONITORING ORGANIZATION U.S. Army Toxic and Hazardous Materials Agency
6c. ADDRESS (City, State, and ZIP Code) Acorn Park Cambridge, Massachusetts 02140-2390	7b. ADDRESS (City, State, and ZIP Code) Attn: CETHA-TE-D Aberdeen Proving Ground, MD 21010-5401
8a. NAME OF FUNDING/SPONSORING ORGANIZATION U.S. Army Toxic & Hazardous Materials Agency — 8b. OFFICE SYMBOL (If applicable) CETHA-TE-D	9. PROCUREMENT INSTRUMENT IDENTIFICATION NUMBER Contract No. DAAK11-85-D-0008 Task Order No. 13
8c. ADDRESS (City, State, and ZIP Code) Attn: CETHA-TE-D Aberdeen Proving Ground, MD 21010-5401	10. SOURCE OF FUNDING NUMBERS PROGRAM ELEMENT NO. / PROJECT NO. / TASK NO. 13 / WORK UNIT ACCESSION NO.

11. TITLE (Include Security Classification)
Demonstration Testing of Plastic Media Blasting (PMB) at Letterkenny Army Depot

12. PERSONAL AUTHOR(S)
R. S. Lindstrom, C. G. d'Agincourt, C. C. Scholl, A. A. Balasco

13a. TYPE OF REPORT	13b. TIME COVERED	14. DATE OF REPORT (Year, Month, Day)	15. PAGE COUNT
Final	FROM 10/87 TO 1/89	10 January 1989	236

16. SUPPLEMENTARY NOTATION

17. COSATI CODES			18. SUBJECT TERMS (Continue on reverse if necessary and identify by block number)
FIELD	GROUP	SUB-GROUP	• Plastic Media Blasting (PMB) • Depainting • Abrasive Blasting • CARC Paint • Chemical Stripping • Hazardous Waste Minimiz

19. ABSTRACT (Continue on reverse if necessary and identify by block number)

Introduction

The U.S. Army has recognized the potential of plastic media blasting (PMB) as an innovativ waste minimization alternative to conventional paint removal techniques. However, little information was available on the use, effectiveness and potential cost savings of PMB for the various types of materiel processed through the U.S. Army Depot System Command (DESCOM Consequently, the following demonstration test program was performed at Letterkenny Army Depot (LEAD) under production-scale conditions to evaluate PMB and determine it's suitabil for use in DESCOM.

Fifty-five tests were performed in a blast cabinet to evaluate several commercially available plastic medias, as well as walnut shells and glass beads, and to determine the optimum operational blast parameters for PMB. Seventy tests were performed in a full-scal blast room, which was specifically purchased for this test program, to evaluate plastic

(continued)

20. DISTRIBUTION/AVAILABILITY OF ABSTRACT ☒ UNCLASSIFIED/UNLIMITED ☐ SAME AS RPT. ☐ DTIC USERS	21. ABSTRACT SECURITY CLASSIFICATION Unclassified
22a. NAME OF RESPONSIBLE INDIVIDUAL Craig W. McPhee	22b. TELEPHONE (Include Area Code) (301) 671-2054 — 22c. OFFICE SYMBOL CETHA-TE-D

DD FORM 1473, 84 MAR — 83 APR edition may be used until exhausted. All other editions are obsolete.

SECURITY CLASSIFICATION OF THIS PAGE
UNCLASSIFIED

media, walnut shells and a combination 80% plastic media/20% glass beads under production - scale conditions. PMB was also tested on Chemical Agent Resistant Coatings (CARC).

Findings and Conclusions

PMB effectively removed conventional paint coatings on all shapes, sizes and materials of contruction tested. Test results did not conclusively indicate that one single brand of plastic media performed (based on paint removal and media consumption) better than all others. Test results did show, however, that for Army depot use, plastic media with a 3.5 to 4.0 moh hardness rating and a 20 to 40 US sieve size achieved the best combination of paint removal and media consumption (waste generation) rates.

In the blast cabinet, at the optimum blast pressure for each depainting method, PMB (at 30 psi) generated an average of 70% less waste than glass beads (at 45 psi) and 40% less waste than walnut shells (at 45 psi). The average paint removal rate achieved with walnut shells was 40% higher than that of plastic media or glass beads.

In the blast room, PMB produced approximately the same paint removal rate at 40, 50 and 60 psi blast pressures. Media consumption rates were the lowest (25 lb/hr) at 40 psi. Walnut shell blasting had approximately 50% better paint removal rates at 80 psi than at either 70 or 50 psi. A combination of 80% plastic media and 20% glass beads worked effectively at 40 psi. Therefore, the optimum blast pressures in the blast room were identified as: 40 psi for plastic media, 80 psi for walnut shells, and 40 psi for the plastic media/glass beads combination.

In the blast room, the average paint removal rate achieved when blasting with walnut shells at 80 psi was approximately the same as PMB at 40 psi. Yet PMB generated 50% less waste than walnut shell blasting. When the plastic media/glass beads combination (at 40 psi) was used, the average paint removal rate was 30% lower than the rates achieved when using plastic media or walnut shells. However, this combination of media removed surface rust and corrosion which plastic media or walnut shells alone did not do. The plastic media/glass beads combination did not lead to an increase in media consumption and like plastic media alone, generated 50% less waste than walnut shells.

Plastic media, walnut shells and the plastic media/glass beads combination all effectively removed CARC, requiring approximately 1.5 to 2.0 times the length of time required for conventional paint removal. Corrosion removal was evaluated for each media: glass beads alone and the plastic media/glass bead combination adequately removed all corrosion. Plastic media removed loose surface rust but not the deeply pitted corrosion. Walnut shells adequately removed most loose surface rust. However, rusted equipment which were blasted with walnut shells were often rejected by quality control inspectors.

Plastic media was effective at roughening the surface of new unpainted panels and parts to provide the anchor pattern desired for subsequent painting. PMB was effective at removing paint and not delaminating, warping or pitting delicate substrates, such as thin aluminum, fiberglass, brass and copper. PMB effectively depainted several specialty items such as S250 shelters, M578 aluminum engine covers, and 175 mm projectiles.

The following blast conditions optimized PMB performance in the blast cabinet: 30 to 40 psi blast pressure; 6 to 10 inch blast standoff distance; and 4 to 5 lb/min media flow rate. Optimum blast conditions for the walk-in blast room were: 40 psi blast pressure, 18 to 30 inch blast stand off distance and 6 to 9 lb/min media flow rate.

Based on an economic comparison of depainting methods for small equipment parts using an abrasive blast waste disposal cost of $0.18/lb, chemical stripping was the least expensive depainting method followed by walnut shell, glass bead and plastic media blasting, respectively. Labor requirements are considerably higher for abrasive blasting in comparison to chemical stripping and consequently abrasive blasting exhibits higher operating costs.

(continued)

An economic comparison of depainting methods for large equipment parts depainted in the walk-in blast room showed that walnut shell blasting was less expensive than either PMB or blasting with the plastic media/glass bead combination. The higher cost of plastic media ($1.40/lb plastic media vs. $0.20/lb walnut shells) was the major factor in the higher operating costs.

It must be noted that the field of depainting is rapidly changing. For example, new and more efficient plastic media and PMB equipment are currently being developed. Test methods to determine whether a solid waste is hazardous are being modified. Federal regulations governing the disposal of hazardous wastes are becoming stricter, making hazardous waste disposal more difficult and consequently more costly. Concerns are being expressed about worker exposure to vapors from chemical stripping tanks, and these concerns may lead to restrictive regulations. Various new alternative depainting methods are under development. Consequently, this report presents the current state of information concerning PMB in a very dynamic industry.

Accession For
NTIS GRA&I ☑
DTIC TAB ☐
Unannounced ☐
Justification
By
Distribution/
Availability Codes
Avail and/or
Dist Special
A-1

TABLE OF CONTENTS

	Page
List of Figures	v
List of Tables	vi
S.0 SUMMARY	S-1
S.1 Objectives	S-1
S.2 Findings and Conclusions	S-1
S.2.1 PMB Performance	S-1
S.2.2 Optimum PMB Blast Parameters	S-4
S.2.3 PMB Economics	S-4
S.2.4 PMB Data Base	S-4
S.3 Recommendations	S-5
1.0 INTRODUCTION AND PURPOSE	1-1
1.1 Introduction	1-1
1.2 Purpose	1-1
2.0 BACKGROUND	2-1
2.1 Chemical Stripping	2-1
2.2 Abrasive Blasting	2-2
3.0 OBJECTIVES AND SCOPE	3-1
3.1 Objectives	3-1
3.2 Scope	3-1
4.0 TEST PROCEDURE	4-1
4.1 Material to be Depainted	4-1
4.2 Parts Inspection	4-1
4.3 Test Runs	4-12
4.4 Test Series 1	4-15
4.5 Test Series 2	4-17
4.6 Test Series 3	4-17
4.7 Test Series 4	4-17
5.0 OPERATING EXPERIENCE	5-1
5.1 Blast Cabinet	5-1
5.2 Walk-In Blast Room	5-1
6.0 TEST SERIES 1 RESULTS AND ANALYSIS	6-1
6.1 Results	6-1
6.2 Analysis	6-3

TABLE OF CONTENTS (Continued)

		Page
	6.2.1 Paint Removal Rate	6-6
	6.2.2 Media Consumption Rate	6-10
7.0	TEST SERIES 2 RESULTS AND ANALYSIS	7-1
	7.1 Results	7-1
	7.2 Analysis	7-1
	7.2.1 Statistical Analysis	7-1
	7.2.2 Media Consumption Rate	7-8
	7.2.3 Paint Removal Rate	7-11
	7.2.4 Other Factors Affecting Depainting Operations	7-18
	7.3 Conclusions	7-21
8.0	TEST SERIES 3 RESULTS AND ANALYSIS	8-1
	8.1 Results	8-1
	8.2 Analysis of Parametric Changes	8-1
	8.2.1 Blast Pressure	8-1
	8.2.2 Blast Stand Off Distance	8-6
	8.2.3 Media Flow Rate	8-7
	8.2.4 Qualitative Assessment of Changes in Blast Parameters	8-7
	8.3 CARC Paint System Removal	8-9
	8.4 Conclusions	8-11
9.0	TEST SERIES 4 RESULTS AND ANALYSIS	9-1
	9.1 Results	9-1
	9.2 Analysis	9-2
	9.2.1 Paint Removal Rates	9-2
	9.2.2 Media Consumption Rates	9-14
	9.3 Conclusions	9-19
10.0	ECONOMICS	10-1
	10.1 LEAD Depainting Operations	10-1
	10.2 Economic Evaluation of Small Parts	10-2
	10.2.1 Labor Costs	10-2
	10.2.2 Material Cost	10-5
	10.2.3 Waste Disposal Costs	10-8
	10.2.4 Facility Costs	10-9
	10.2.5 Total Depainting Cost Comparison for Small Parts	10-11

TABLE OF CONTENTS (Continued)

		Page
10.3	Economic Evaluation of Large Equipment	10-15
10.3.1	Labor Costs	10-15
10.3.2	Material Cost	10-16
10.3.3	Waste Disposal Costs	10-16
10.3.4	Facility Costs	10-16
10.3.5	Total Depainting Cost Comparison for Large Parts	10-17
11.0	AUTOMATED PMB EQUIPMENT AND ALTERNATIVE DEPAINTING METHODS	11-1
11.1	Automated PMB Equipment	11-1
11.1.1	Linear Conveyors	11-1
11.1.2	Rotating Table Units	11-1
11.1.3	Rotating Post Machines	11-2
11.1.4	Tumble Blast Units	11-2
11.1.5	Centrifugal PMB Blasting	11-2
11.2	Alternative Depainting Methods	11-3
11.2.1	Xenon Flash Lamp	11-3
11.2.2	Laser Depainting	11-3
11.2.3	Carbon Dioxide Pellet Blasting	11-4
11.2.4	Thermal Degradation Techniques	11-4
11.2.5	Water Jet Blast	11-6
12.0	CORROSION REMOVAL	12-1
13.0	CONCLUSIONS AND RECOMMENDATIONS	13-1
13.1	Conclusions	13-1
13.1.1	PMB Performance	13-1
13.1.2	Optimum PMB Blast Parameters	13-2
13.1.3	PMB Economics	13-2
13.1.4	PMB Data Base	13-3
13.2	Recommendations	13-4
14.0	REFERENCES	14-1

TABLE OF CONTENTS (Continued)

	Page
APPENDIX A - Operating Procedure for PMB Test Program	A-1
APPENDIX B - Equipment Parts Depainted During Test Series 1, 2, 3 and 4	B-1
APPENDIX C - Instrument Operating Instructions	C-1
APPENDIX D - Part Specifications and Surface Area Calculations	D-1
APPENDIX E - Results of Media Flow Rate Tests	E-1

LIST OF FIGURES

Figure No.		Page
5-1	Schematic of Blast Cabinet	5-2
5-2	Schematic of Walk-In Blast Room	5-2
7-1	Consumption Rate vs. Media Hardness	7-10
7-2	Consumption Rate vs. Mesh Size	7-13
7-3	Paint Removal Rate vs. Media Hardness	7-16
7-4	Paint Removal Rate vs. Mesh Size	7-17
7-5	Media Evaluation Matrix	7-20
8-1	Test Series 3 - Parameter Optimization Tests Paint Removal	8-4
8-2	Test Series 3 - Parameter Optimization Tests Media Consumption	8-5
8-3	Blast Parameter Evaluation Matrix	8-8
9-1	CARC vs. Conventional Paint Removal Rates for Medias Tested	9-9
10-1	Annual Expenses for Depainting Small Parts	10-14
10-2	Annual Expenses for Depainting Large Parts	10-19
12-1	SSPC-VIS 1 Rust Grade Specifications (A and B)	12-2
12-2	SSPC-VIS 1 Rust Grade Specifications (C and D)	12-3
12-3	SSPC-VIS 1 Blast Cleaning Preparation Standard B Sa 2	12-5
12-4	Grades B and C Rust Before and After PMB	12-6

LIST OF TABLES

Table No.		Page
S-1	Test Result Summary for Depainting Methods Evaluated During Production-Scale Demonstration Test Program	S-3
2-1	Type and Cost of Typical Blast Media	2-4
4-1	PMB Test Program Matrix	4-2
4-2	Plastic Media Blasting Test Program/Small Parts Testing Information	4-8
4-3	Plastic Media Blasting Test Program/Large Parts Testing Information	4-11
4-4	Media Log	4-13
4-5	Parts Log	4-14
4-6	Media Size Log	4-16
4-7	Plastic Blast Media Tested in Test Series 1 and 2	4-18
6-1	Test Series 1: Results	6-2
6-2	Average Media Flow Rates at Various Media Flow Valve Settings	6-5
6-3	Calculations to Determine Effective Surface Area	6-9
6-4	Percent of Media in Blast Cabinet System Smaller than 60 Mesh	6-12
7-1	Modifications to Original Test Plan	7-2
7-2	Test Series 2: Results	7-3
7-3	Hardness/Size Breakdown of Media Tested	7-4
7-4	Media Consumption Rates	7-6
7-5	Paint Removal Rates	7-7
7-6	Media Consumption Rate Analysis	7-9
7-7	Particle Size Distribution of Virgin Media	7-12
7-8	Paint Removal Rate Analysis	7-14
8-1	Test Series 3: Results	8-2
8-2	Modifications to Original Test Plan	8-3

LIST OF TABLES (Continued)

Table No.		Page
8-3	CARC System Paint Removal Results	8-10
8-4	CARC Versus Conventional Paint Removal Rates for Fog Oil Pump Smoke Generator Sets	8-12
9-1	Test Series 4: Results	9-3
9-2	Walk-In Blast Room PMB Average Paint Removal Rates	9-5
9-3	Walk-In Blast Room Walnut Shell Blasting Average Paint Removal Rates	9-11
9-4	Walk-In Blast Room Average Paint Removal Rates for Each Media Tested at Optimum Pressures	9-13
9-5	Blast Room Testing Average Media Consumption Rates	9-15
10-1	Waste Generation from Depainting Operations at LEAD (1987)	10-3
10-2	Time Allotments and Labor Costs for Typical Depainting Operations at LEAD	10-6
10-3	Overall Annual Costs for Depainting a Basket of 8V Engine Parts	10-12
10-4	Overall Annual Costs for Depainting 8V Containers	10-18
12-1	Rust Removal for Abrasive Blast Media	12-7

S.0 SUMMARY

S.1 Objectives

The objectives of the Demonstration Testing Program conducted under Task Order Number 13, entitled "Demonstration Testing of Plastic Media Blasting (PMB)," under the U.S. Army Toxic and Hazardous Materials Agency (USATHAMA), Contract No. DAAK11-85-D-0008, were to: (1) characterize the effects of different grades and sizes of plastic media on abrasive blast media performance and compare performance of plastic media with conventional depainting technologies; (2) determine the optimum PMB blast parameters; (3) identify where PMB would be a cost effective alternative to present depainting techniques; and (4) initiate the development of a PMB data base which would assist the various depots in determining the merits of PMB for various applications.

S.2 Findings and Conclusions

S.2.1 PMB Performance

PMB effectively removed conventional paint coatings on all shapes, sizes and materials of construction tested. Test results did not conclusively indicate that one single brand of plastic media performed (based on paint removal and media consumption) better than all others. Test results did show, however, that for Army depot use, plastic media with a 3.5 to 4.0 moh hardness rating and a 20 to 40 U.S. sieve size achieved the best combination of paint removal and media consumption (waste generation) rates.

In the blast cabinet, at the optimum blast pressure for each depainting method, PMB (at 30 psi) generated an average of 70% less waste than glass beads (at 45 psi) and 40% less waste than walnut shells (at 45 psi). The average paint removal rate achieved with walnut shells was 40% higher than that of plastic media or glass beads.

In the blast room, PMB produced approximately the same paint removal rate at 40, 50 and 60 psi blast pressures. Media consumption rates were the lowest (25 lb/hr) at 40 psi. Walnut shell blasting had approximately 50% better paint removal rates at 80 psi than at either 70 or 50 psi. A combination of 80% plastic media and 20% glass beads worked effectively at 40 psi. Therefore the optimum blast pressures in the blast room were identified as: 40 psi for plastic media, 80 psi for walnut shells, and 40 psi for the plastic media/glass beads combination.

In the blast room the average paint removal rate achieved when blasting with walnut shells at 80 psi was approximately the same as PMB at 40 psi. Yet PMB generated 50% less waste than walnut shell blasting. When the plastic media/glass beads combination (at 40 psi)

was used, the average paint removal rate was 30% lower than the rates achieved when using plastic media or walnut shells. However, this combination of media removed surface rust and corrosion which plastic media or walnut shells alone did not do. The plastic media/glass beads combination did not lead to an increase in media consumption and like plastic media alone, generated 50% less waste than walnut shells.

Plastic media, walnut shell and glass bead blasting and chemical stripping were also evaluated using the following qualitative evaluation criteria:

- post blasting part appearance;
- anchor pattern;
- rust and gasket removal;
- substrate warping and pitting;
- dust generation;
- adhesion of residual media and resulting blowoff and/or welding difficulties;
- blast system equipment wear; and
- operator ease.

Based on discussions with plant operators and engineers, this evaluation showed that overall, PMB was the preferred depainting method.

In the blast room, plastic media, walnut shells and the plastic media/glass beads combination all effectively removed Chemical Agent Resistant Coatings (CARC). CARC removal required approximately 1.5 to 2.0 times the length of time required for conventional paint removal. Preliminary discussions with depot personnel indicated that chemical stripping was not effective at removing CARC.

Corrosion removal was evaluated for each media: glass beads alone and the plastic media/glass bead combination adequately removed all corrosion. Plastic media removed loose surface rust but not the deeply pitted corrosion. Walnut shells adequately removed most loose surface rust. However, rusted equipment which were blasted with walnut shells were often rejected by quality control inspectors.

Plastic media was effective at roughening the surface of new unpainted panels and parts to provide the anchor pattern desired for subsequent painting.

PMB was effective at removing paint and not delaminating, warping or pitting delicate substrates, such as thin aluminum, fiberglass, brass and copper. PMB effectively depainted several specialty items such as S250 shelters, M578 aluminum engine covers, and 175 mm projectiles.

A summary of the demonstration test program results for the various depainting methods tested is presented in Table S-1.

TABLE S-1

TEST RESULT SUMMARY FOR DEPAINTING METHODS EVALUATED DURING PRODUCTION-SCALE DEMONSTRATION TEST PROGRAM

PERFORMANCE CRITERIA	DEPAINTING METHOD				
	PMB(a)	WALNUT SHELL BLASTING(b)	GLASS BEAD BLASTING(c)	80% PLASTIC MEDIA/ 20% GLASS BEAD BLASTING(d)	CHEMICAL STRIPPING(f)
Media consumption rate (lb/yr) (e) (Waste generation rate)	26,000	57,000	80,000	26,000	---(g)
Conventional paint removal rate-Large containers (sq ft/hr)	175	185	175	125	NA(h)
CARC paint removal rate-Large containers (sq ft/hr)	95	120	NA	100	NA
Estimated yearly operating costs-Blast cabinet operations ($)	80,000	65,000	80,000	NA	45,000
Estimated yearly operating costs-Blast room operations ($)	130,000	105,000	NA	130,000	---

(a) Based on tests conducted in the blast room at 40 psi
(b) Based on tests conducted in the blast room at 80 psi
(c) Based on tests conducted in the blast cabinet at 45 psi and extrapolated to blast room conditions: scale-up factor and extrapolation described in Section 9.0
(d) Based on tests conducted in the blast room at 40 psi
(e) Based on 260 operating days per year, 1 8-hour shift per day and 4 hours of actual blasting per 8-hour shift
(f) Based on data provided by LEAD personnel
(g) Chemical stripping of large parts is not performed at LEAD. Typically, waste generation rates are much higher for chemical stripping than abrasive blasting of large parts.
(h) NA=Not available

Source: Arthur D. Little, Inc.

Arthur D Little

S.2.2 Optimum PMB Blast Parameters

The following blast conditions optimized PMB performance in the blast cabinet: 30 to 40 psi blast pressure; 6 to 10 inch blast standoff distance; and 4 to 5 lb/min media flow rate. Optimum blast conditions for the walk-in blast room were: 40 psi blast pressure, 18 to 30 inch blast stand off distance and 6 to 9 lb/min media flow rate.

S.2.3 PMB Economics

Based on an economic comparison of depainting methods for small equipment parts using an abrasive blast waste disposal cost of $0.18/lb ($360/ton), chemical stripping was the least expensive depainting method followed by walnut shell, glass bead and plastic media blasting, respectively. Labor requirements are considerably higher for abrasive blasting in comparison to chemical stripping and consequently abrasive blasting exhibits higher operating costs. Automated blast equipment, however, shows potential to reduce labor costs for abrasive blasting and thus make it more competitive with chemical stripping. A trade-off exists, though, since higher media consumption rates have been reported for some automated systems.

An economic comparison of depainting methods for large equipment parts depainted in the walk-in blast room showed that walnut shell blasting was less expensive than either PMB or blasting with the plastic media/glass bead combination. The higher cost of plastic media ($1.40/lb plastic media vs. $0.20/lb walnut shells) was the major factor in the higher operating costs.

S.2.4 PMB Data Base

In addition to the previously discussed description of PMB performance, optimum blast parameters and economics, the following information regarding PMB was developed during the demonstration test program and should also be a part of the PMB data base.

Key process variables which affect PMB paint removal efficiency were identified. These variables include:

- part size and shape complexity;
- length of degreasing time (prior to blasting);
- amount of residual grit, grease, and gasket material;
- paint type, thickness, and extent of blistering; and
- operator technique and efficiency.

In the walk-in blast room, whether blasting with plastic media, walnut shells, or the plastic media/glass beads combination, paint removal rates varied widely depending on equipment size, shape and complexity. Highest paint removal rates were achieved when blasting large flat surfaces such as containers and water tanks; lower rates were achieved on smaller more complex parts.

Tests showed that excessively high ventilation rates in the blast room increase media consumption and should be avoided. The lowest average media consumption rate (25 lb/hr) was achieved at a 100 linear feet per minute (fpm) blast room ventilation rate and at 40 psi blast pressure. At the higher 250 fpm ventilation rate in the blast room as originally installed, recyclable media was carried directly to waste through the ventilation system and consumption rates were 40% higher (35 lb/hr).

Various types of alternative depainting methods such as: xenon flash lamp, laser, carbon dioxide pellet blasting, thermal degradation and water jet blasting were reviewed. Among these alternative depainting methods, the thermal degradation techniques showed the most immediate promise as an efficient and economic alternative depainting method.

It is important to note, however, that the field of depainting is rapidly changing. For example, new and more efficient plastic media and PMB equipment are currently being developed. Test methods to determine whether a solid waste is hazardous are being modified. Federal regulations governing the disposal of hazardous wastes are becoming stricter, making hazardous waste disposal more difficult and consequently more costly. Concerns are being expressed about worker exposure to vapors from chemical stripping tanks, and these concerns may lead to restrictive regulations. In addition, various new alternative depainting methods are under development. Consequently, this report presents the current state of information concerning PMB in a very dynamic industry.

S.3 Recommendations

The following recommendations are made with the primary purpose to increase the understanding of PMB and to improve depainting operations in the Army Depot System.

(1) With the data in this report, it should be possible to assess the viability of using PMB at most Army installations. Some small scale depot-specific testing of unique parts may be necessary before specific processes are converted to PMB.

(2) Operator training workshops are needed to instruct the depot personnel on proper blast system operation. Proper operation of the blast system and recycle system are essential to the efficient and economic use of PMB. Following the operator training workshops, the depot Production Engineering departments should continue to oversee and ensure proper blast system operation.

(3) A depainting clearing house should be established within the Army Depot System. This clearing house should have four main objectives. The first would be to stay abreast of the dynamic technical and regulatory factors affecting depainting operations. The second would be to maintain a data base of

information on PMB that would be easily accessible to depot personnel. The third objective would be to provide a communication link to ensure technology transfer between depots. The fourth objective would be to provide technical support services to depot personnel during the purchasing and installation of PMB equipment. The number of depainting options are increasing and depot engineers need up-to-date information and data in order to optimize depot depainting operations in accordance with each of their specific needs.

(4) A similar test program, to determine paint removal and media consumption rates and labor requirements is needed for automated PMB. Based on current economics, labor requirements for the manual abrasive blasting of small parts preclude it from being a cost effective alternative to chemical stripping. However, automated blast equipment should reduce depainting labor requirements and associated labor costs such that automated PMB becomes more cost effective and competitive with chemical stripping.

1.0 INTRODUCTION AND PURPOSE

1.1 Introduction

The United States (U.S.) Army has recognized the potential of plastic blast media for use as an abrasive in removing paint. Based on reports (1, 2, 3, 4) that PMB offered: improved paint removal rates; reduced generation of hazardous waste; reduced risk to human health; and reduced substrate damage, the Army acknowledged the need for a better understanding of the PMB process in order to define specific applications PMB might have in the U.S. Army Depot System Command (DESCOM). In response to this need, Arthur D. Little, Inc. (ADL) conducted a study (5) which showed that each of the Army depots had various perceptions of PMB based on their limited testing and the different types of materiel that they processed. The study also noted that most testing being conducted on PMB by the U.S. Armed Forces has centered on the depainting of aircraft with PMB. PMB was proving to be a highly cost-effective alternative to chemical stripping, which was being restricted due to its environmental and health hazards. Little information was available on the use, effectiveness and potential cost savings of PMB for the various types of materiel processed through DESCOM.

As identified in the Arthur D. Little report, due to the high cost of plastic blast media, it is extremely important to optimize the blast system and blast parameters when using plastic media. If these are not optimized, excessive media is wasted, paint removal rates decrease and the economics of PMB become prohibitive. The major blast parameters that need to be optimized are blast pressure, blast nozzle stand off distance and media flow rate. In addition, the blast facility should be designed for plastic media in order to assure efficient recycling of the costly media. In prior studies, parameter optimization was addressed in some detail with respect to aircraft depainting, but limited attention has been focused on the various types of materiel presently undergoing depainting operations in the Army depot system.

In addition, the Arthur D. Little report indicated that PMB test results apparently varied greatly according to the manufacturer's grade and size of plastic media used. Consequently, we questioned whether the varying results were due to the type of media used or to the way the tests were conducted. At the time these tests were performed, there were no government specifications for plastic blast media to use in evaluation of the quality of the various media. Clearly a test program performed under production-scale conditions was needed to provide an initial data base on the use of PMB on Army materiel.

1.2 Purpose

The test program planned by Arthur D. Little (5) was designed to: (1) characterize the effects of different grades and sizes of plastic media on abrasive blast media performance and compare performance of plastic media with conventional depainting technologies; (2) determine the

optimum PMB blast parameters; (3) identify where PMB application would be a cost effective alternative to present depainting techniques; and (4) initiate the development of a PMB data base which would assist the various depots in determining the merits of PMB for various applications.

Questions addressed in this test program included:

(1) How dependent are depainting results on the type and size of plastic blast media used?

(2) What are the optimum blast parameters (e.g., blast pressure, blast nozzle stand off distance and media flow rate) for PMB? and

(3) What size, shape and material of construction of Army equipment is most suited for PMB?

2.0 BACKGROUND

There are three primary techniques used for paint removal in industry, in general, and in the U.S. Army depot systems in particular. These are chemical stripping, abrasive blasting, and hand sanding. Hand sanding is highly labor intensive and, therefore, costly and is used only where one of the other two methods cannot be used for practical reasons (e.g., chemical stripping of an entire part not being possible due to the presence of electrical wiring or material incompatibility; abrasive blasting not being possible because of the delicate finish on machined parts or fragile nature of the substrate).

2.1 Chemical Stripping

Chemical stripping is used primarily for paint removal on small items where abrasive blasting is inefficient, or for paint removal from substrates that would be damaged by abrasive blasting. These softer substrates include aluminum, copper, wood, and fiberglass composites. The strippers contain solvents (e.g., methylene chloride) and chemicals (e.g., phenols) that attack, swell, and soften a wide variety of paints with little or no damage to the substrates.

Until about 8 to 10 years ago, most of the heavy-duty paint strippers contained potent chlorinated solvents such as methylene chloride and various phenols or cresols. Because of the potential toxic effects of the phenols and cresols on the operation of painting/depainting facilities' wastewater treatment plants and in the environment in general, the Environmental Protection Agency (EPA) adopted regulations to discourage their use. At that time, most paint strippers were converted to a methylene chloride/formic acid formulation. Although less efficient, these strippers still worked reasonably well.

During the last five years, the methylene chloride/formic acid systems have also been criticized by both the EPA because of their adverse effect on wastewater treatment systems and the Occupational Safety and Health Administration (OSHA) for the suspected carcinogen classification of methylene chloride (6). Consequently, regulatory pressure has prompted the U.S. Armed Forces including the U.S. Army depot system to eliminate large item chemical stripping from their depainting operations. For example, Corpus Christi Army Depot (CCAD), which deals almost exclusively with refurbishing (including depainting) of helicopters, has in the past and continues to search for alternative depainting techniques to chemical stripping.

In the chemical stripping of large items, the stripper is sprayed or brushed onto the surface from which paint is to be removed. The stripper normally contains a thickener (e.g., colloidal silica) so that a heavy film of stripper will remain in place even on vertical or inverted surfaces allowing time for the chemicals to penetrate the paint film. After the paint has softened, the stripper and paint sludge are removed from the part mechanically with a brush or squeegee and a water/air blast and/or water flooding. The parts are then

scraped. In the past, the wash water containing paint stripper residue and paint sludge were directed to the facility's wastewater treatment system. It soon became apparent, however, that the existing wastewater treatment plants at these facilities had difficulty in processing these wastes; consequently, paint stripper residue and paint sludge are now directed, in most cases, to special settling and holding tanks prior to disposal as a hazardous waste. For these stripping operations, costs for the stripper, labor and waste disposal are all high. Chemical stripping of large items is not practiced very much in the Army Depot System anymore. The high waste generation, high labor requirements and concerns about worker health have all but eliminated this practice.

To chemically strip smaller parts, either individual parts or baskets of parts are immersed in a dip tank containing a stripper (usually with a water layer on top to reduce evaporation of volatile stripper components) such as methylene chloride. After the paint has softened, the parts are removed from the tank, rinsed with water and frequently blasted with water, or air and water, to remove softened, clinging paint. This process is generally quite effective, however, the paint sludge and contaminated rinse water are considered hazardous wastes and present treatment/disposal problems. Additionally, the paint sludge that accumulates in the dip tanks along with the spent stripper, which must be removed and disposed of periodically, are considered hazardous wastes and disposal is costly.

Current chemical paint stripping operations have had limited success removing some paint systems, particularly the new Chemical Agent Resistant Coating (CARC) paint which is now being used throughout the Army Depot System for most material. Abrasive blasting after chemical stripping is usually required to completely remove the paint. Research programs are currently evaluating various chemicals to determine their effectiveness at removing CARC paint with limited success to date.

Aside from the hazardous waste disposal and CARC paint removal problems, the dip tank chemical stripping is a relatively efficient depainting process because no labor is involved while the parts are in the dip tank, and the rinsing and water blasting are fairly quick operations.

However, there are increasing concerns over worker exposures to methylene chloride vapors from dip tank operations and future regulations may severely restrict or even ban dip tank stripping.

2.2 Abrasive Blasting

Aside from chemical stripping, the other primary depainting method is abrasive blasting. In abrasive blasting, the abrasive media is frequently entrained in a high velocity air stream and directed through a nozzle against the surface to be depainted. The air pressures and flow velocities, the amount of abrasive media in the airstream, and the distance and angle of the blast nozzle from the surface being depainted are all important parameters in abrasive blast depainting. In some

cases, particularly with automated blast equipment, the media is accelerated by centrifugal "slinger" wheels. These systems can accelerate high volumes of media and are more energy efficient than compressed air acceleration systems.

Although sand was the original abrasive blast media, a large number of different abrasive media have been developed to meet the wide range of needs for paint removal and parts cleaning. A number of these media together with their current approximate costs are listed in Table 2-1.

Sand is the least expensive abrasive blast media and when screened to provide a limited size range of particles, costs approximately $0.015 to $0.02 per pound. Frequently, however, local sand is somewhat rounded and fractures too easily to provide high efficiency paint removal. As an alternative, high silica sand, which tends to be harder with sharper cutting edges, is sometimes used. Although it costs more than local sand ($0.02 to $0.025 per pound), it frequently removes paint more rapidly and, as a result, reduces labor costs and ultimately, operating costs.

In recent years, OSHA has been applying increasing pressure to discontinue sand blasting because of the health hazards associated with dust inhalation by operators and resulting health problems (e.g.,silicosis). Although sandblast operators wear protective suits and have a separate air supply, there is still the danger of inhalation of the fine silica dust when personnel enter a blast room to insert or remove materiel, during cleanup of blasted parts, and at other times when the fine dust can become airborne.

Copper slag (ground and sized) is another inexpensive media and circumvents the silicosis health hazard. Unfortunately, copper slag generates much dust during blasting and has limited use on substrates such as aluminum where particles of slag may become embedded in the soft metal and lead to corrosion problems. In addition, if not fully removed, residual copper slag on metal surfaces may poison corrosion resistant chemical pretreatment baths used prior to the repainting of the materiel.

Because of their low cost and low durability, sand and slag media are frequently recycled to a minimum degree or not at all, and consequently, large quantities of waste are generated. As the amount of paint contained in the waste is small relative to the amount of spent media, these wastes are generally not found to be hazardous by current EPA Standards. However, as future regulations concerning the test methods for hazardous waste and hazardous waste landfilling limits become more stringent, disposal of spent media will become an even more serious and costly problem.

To address the concerns associated with sand and copper slag, new mineral based abrasives have been marketed. These include peridot and staurolite, naturally occurring minerals that are ground and screened to the proper size for use as abrasive blasting media. At $0.03 to

TABLE 2-1

TYPE AND COST OF TYPICAL BLAST MEDIA

Blast Media	Cost (Cents/Pound)
Sand	1.5 - 2
Silica Sand	2 - 2.5
Copper Slag	2 - 2.5
Peridot and Staurolite	3 - 5
Walnut Shells	15 - 30
Steel Grit/Shot	20 - 30
Glass Beads	30 - 35
Aluminum Oxide	35
Garnet	40
Plastic Beads	140 - 200

Source: Arthur D. Little, Inc., based on data from U.S. Army Depot Procurement Offices and commercial suppliers.

$0.05 per pound, these alternative minerals are nearly 2-1/2 times more expensive than local sand. Proponents of these minerals, however, claim that they are more durable, can be recycled several times, and, therefore, are cost competitive with sand. Also, the reduced amount of waste because of increased recycling could be very significant in the future.

Steel grit and shot are dense, aggressive media that effectively remove not only paint, but also rust deposits and mill scale on steel. The steel grit is about 10 times the cost of sand (per pound), but it is extremely durable and can be recycled as many as 50 to 100 times. As a result, it is one of the most efficient media in terms of media cost per unit of surface cleaned or depainted. However, like other aggressive media, steel shot damages sensitive substrates and machined surfaces. In addition, use with aluminum is limited because any residual steel dust embedded in surfaces can cause corrosion problems.

Aluminum oxide and garnet, synthetic and natural abrasives respectively, have higher durability and greater cutting power than any of the low cost abrasives. Although their purchase cost is high (35 to 40 cents per pound), they sometimes prove to be the most cost effective abrasive media due to their durability and fast cutting rate which, in turn, leads to a reduction in labor and operating costs.

Walnut shells and other agricultural media (corn cobs, rice hulls, etc.) have been widely promoted as soft abrasive blast media for use on aluminum sheet and machined metal surfaces where minimum surface damage is required. These media are relatively low in cost but their durability has been questioned. In addition, because they are natural products, their properties can vary from season to season. Also, with changing ambient humidity, they are subject to changes in properties and to decay from fungus attack if they are not kept completely dry. The ability to consistently maintain a high product quality for this media is difficult, at best. In addition, during blasting operations the agricultural media generate much fine dust which not only hinders visibility of the blast nozzle operator but also creates a potential explosion hazard. For this reason, OSHA regulations require that agricultural media be used only in fully automated blasting facilities (7) or in areas where adequate dust removal ventilation is provided. The waste generated from blasting with agricultural media is organic, except for the paint residue, and therefore, incineration under controlled conditions is a possible disposal alternative.

Glass beads are rounded and do not have the aggressive cutting power of some of the other media. For this reason, glass beads are used primarily for touch up work to remove mill scale and to clean and polish corroded surfaces.

Plastic media is the most recent abrasive media option. The media was originally developed as an outlet for waste thermoset resin from button making operations. As plastic media is synthetic, the properties of

plastic media can be controlled to a much greater extent than those of natural organic media to provide improved durability, controlled hardness, and reduced dust generation.

The plastic media can typically be purchased in three grades; Type I (polyester), Type II (urea formaldehyde), and Type III (melamine formaldehyde). The hardness of the plastic stock is typically reported on a MOH hardness scale. The hardness of the plastic medias is as follows: Type I - 3.0 moh, Type II - 3.5 moh, Type III - 4.0 moh.

Plastic media is purchased in particle size ranging from 12 to 16 mesh to 30 to 40 mesh.

In 1985, the first full-scale PMB operation was started at Hill Air Force Base (Ogden, Utah) to depaint aircraft. In fact, to date, the primary application of PMB has still been as a replacement for chemical stripping of aircraft by the U.S. Air Force, Navy, Army (Corpus Christi Army Depot), and certain civil aviation companies. PMB has eliminated severe environmental pollution and occupational safety and health problems associated with chemical stripping. In addition, the use of PMB on aircraft has been very cost effective due to reduced material (stripper) costs, waste disposal costs and labor requirements. However, substantial concern has arisen regarding possible damage to thin aluminum substrates and composites by PMB. This issue is currently under intensive study in several U.S. Air Force programs (8,9).

In depainting operations where abrasive blasting is already used instead of chemical stripping, the cost effectiveness of PMB and the potential for hazardous waste reduction is much less clear. Given existing hazardous waste regulations and relatively low disposal costs at present, PMB is not cost competitive with aggressive, low cost media such as sand and the alternative low silica minerals. These aggressive media not only remove paint but also remove corrosion and a small amount of metal to provide the white metal surface and anchor pattern necessary for good adhesion during repainting. Furthermore, plastic media cannot match the high production rates of the low cost, aggressive media.

In contrast, plastic media may be competitive with the "soft" blast media such as walnut shells. Although walnut shells cost $0.15 to $0.30/lb compared with $1.40 to $2.00/lb for plastic media, the plastic achieves comparable paint removal with higher recycle rates.

Ultimately, the economic advantage of plastic media blasting versus other depainting methods may depend on waste disposal costs. The cost of hazardous waste disposal is high and increasing. Current costs range from $0.15 to $2.00/lb but these will escalate rapidly over the next five years as new regulations are imposed prohibiting landfilling of most hazardous wastes. For certain wastes such as chlorinated solvents, disposal costs are already as high as $300 to $500 per 55 gal drum. To determine whether the spent media and dust are a hazardous waste, the Extraction Procedure (EP) Toxicity test for leachable heavy

metals is presently used. Chromium, lead, and cadmium are the metals in the paint waste that have the potential to exceed EP toxicity limits thereby making the waste hazardous. As the cost of hazardous waste disposal increases, the question of whether the waste is hazardous is critically important to the economics of PMB. If low cost media like sand are used with low recycle rates, the heavy metal concentration may be low enough to classify the waste as non-hazardous by current regulations and disposal costs would be low. However, if the heavy metal content of the blast residue is high enough to classify the waste as hazardous, plastic media may become economical due to its high recyclability and resulting low volume of waste.

Both existing and future changes in EPA regulations regarding hazardous waste and landfilling limits will have a significant impact on the cost effectiveness of PMB. One very pertinent regulation is the Hazardous and Solid Waste Amendments of 1984 (HSWA) to the Resource Conservation and Recovery Act of 1976 (RCRA). In the HSWA, the "Land Ban Rule" sets the framework for restrictions to the land disposal of hazardous waste. In this Rule a schedule from 1987 to 1990 has been established banning the disposal of certain wastes without adequate treatment prior to disposal. These restricted wastes include the heavy metals found in depainting residue. When these disposal standards are set, treatment requirements will undoubtedly increase, which in turn will increase disposal costs. In addition the EPA test to determine whether or not a solid waste is hazardous is changing from the Extraction Procedure (EP) Toxicity Test to the Toxic Characteristic Leaching Procedure (TCLP). This new test should result in additional wastes being defined as hazardous and will also increase disposal costs.

In addition to the federal regulations, the Department of Defense (DOD) has instituted an ambitious hazardous waste minimization program which encourages source reduction and recycling. This DOD program for waste minimization may even override certain economic factors.

PMB is a new technology and plastic media itself is still in an evolutionary stage. Variable durability leading to different recycle rates has been reported (5), indicating a lack of quality control in media manufacture. Since recycle rates for the high cost plastic media are pivotal for PMB economics, the durability of a media is important. A Tri-Service (U.S. Army, Navy and Air Force) specification (10) for the media has recently been finalized. This specification was needed, because the number of media suppliers is rapidly increasing, and new types of plastic media are being developed. Consequently, a basis for judging and comparing plastic media quality is required. Because PMB is a new process, new types of PMB equipment including automated equipment are being developed which could improve the efficiency and economics of the process. Some of these are discussed in Section 11.

There are several other new depainting methods under development and evaluation which utilize xenon flashlamps, lasers, carbon dioxide pellets, and various types of thermal decomposition techniques to remove paint. An analysis of these depainting methods is outside the

scope of this program, however, a brief discussion of the most recent developments and/or experience with these methods is also provided in Section 11, because they represent possible alternatives to PMB or complementary systems which might be used in conjunction with PMB to provide a depainting system of improved efficiency.

3.0 OBJECTIVES AND SCOPE

3.1 Objectives

This test program was designed to meet several objectives including:

(1) Determine and compare paint removal and media consumption rates of several types and sizes representing the range of commercially available plastic blast media;

(2) Determine and compare paint removal and media consumption rates of walnut shells and glass beads to those rates established for plastic blast media;

(3) Determine the optimum blast parameters for PMB (e.g., media flow rate, blast stand off distance and blast pressure);

(4) Determine the effectiveness of PMB on Army materiel painted with CARC systems;

(5) Determine the applicability of PMB on Army materiel of various shapes, sizes and materials of construction;

(6) Review proposals for installation of a walk-in blast room (to be used during production-scale demonstration test program) and arrange for its installation at Letterkenny Army Depot (LEAD);

(7) Stay abreast of new developments in the field of PMB by maintaining contact with both military and commercial organizations;

(8) Gather information on automated blast equipment to determine its applicability to plastic media blasting of small parts;

(9) Stay abreast of new developments in the field of other novel depainting methods such as xenon flash lamps, lasers and carbon dioxide pellets, etc.; and

(10) Initiate the building of a PMB database to be used as a resource by U.S. Army depot personnel to identify potential areas for application of PMB in their operations.

3.2 Scope

The production-scale demonstration test program, conducted from December 1987 through October 1988 at LEAD (located in Chambersburg, PA), consisted of four series of tests designed to evaluate the effectiveness and efficiency of commercially available plastic media in depainting various types of U.S. Army equipment. The first three test series were performed in a blast cabinet. The fourth test series was performed in a new blast room installed for this program.

In Test Series 1, two types of plastic media were selected and 13 test runs were conducted. An operating procedure was established and key process variables which affect depainting results were identified.

During Test Series 2, the performance of 17 different types of commercially available plastic media including the two types of media used in Test Series 1 was evaluated and compared. Tests were also conducted with glass beads and walnut shells for comparison with conventional abrasive blast media alternatives. A total of 28 test runs were conducted. The results from both Test Series 1 and Test Series 2 provided the necessary data to evaluate the reproducibility of the PMB test results using the established procedure.

In Test Series 3, the effects of changes in blast parameters (blast pressure, blast stand off distance, and media flow rate) were determined. As most Army equipment is now painted with CARC paint systems and there is considerable concern within the U.S. Army that CARC paint will be very difficult to remove, tests were also conducted with materiel painted with CARC paint systems. A total of 13 test runs were conducted during Test Series 3.

Test Series 4 was conducted in a walk-in blast room on a selection of Army materiel of large parts with various shapes, sizes, materials of construction and paint coatings. This is in contrast to the above three test series which were conducted in a blast cabinet on a selection of over 40 different small parts. Test Series 4 was conducted in a walk-in blast room for several reasons: 1) the majority of abrasive blasting done in the Army Depot System takes place in walk-in blast rooms, so baseline data was also needed here; 2) it is possible to depaint much larger parts in a walk-in blast room which enables one to determine the applicability of PMB to depaint a wider variety of parts; and 3) comparisons were needed to determine if the optimum blast parameters established for the blast cabinet were appropriate for use in the walk-in blast room. A total of 70 test runs were conducted during Test Series 4.

4.0 TEST PROCEDURE

The general procedure for all test runs (Series 1, 2, 3 and 4) is described in this section. The detailed operating procedure employed is discussed in Appendix A. The materiel depainted, test preparation and test runs are discussed in Section 4.1 through 4.4, respectively, while the specific variables for each test series are described in Sections 4.5 through 4.8. A test matrix for the entire test program which outlines each test and the parameters varied is provided in Table 4-1.

An engineer from Arthur D Little, Inc. was on-site at LEAD at all times during the testing to oversee the test program, ensure proper test procedures were followed, and collect and record all necessary data.

4.1 Material to be Depainted

The materiel to be depainted was chosen from equipment parts available at LEAD at the time of testing. Both aluminum and steel parts of various sizes and thicknesses were selected in an effort to represent, to the extent possible, the wide range of materiel currently being depainted at all the various Army depots. Throughout the test program, LEAD personnel were responsible for ensuring that there was an adequate amount of materiel for blasting.

During Test Series 1, 2 and 3, a standardized set of over 40 different equipment parts including smoke generator toolboxes, smoke generator fog oil pump parts and selected 8V engine parts were depainted. Typically, these parts are processed by LEAD in volume on a continuing basis. During Test Series 4, materiel larger in size, such as containers, electronic shelters, artillery shells and M12 Decon units were depainted. The parts selected for this test series represented to the extent possible, the various types of materiel presently being depainted throughout the depot system. Tables 4-2 and 4-3 lists these items. Illustrations of all the parts depainted during the course of the test program can be found in Appendix B.

4.2 Parts Inspection

Prior to Test Series 1, the toolboxes, the smoke generator parts and the 8V engine parts were each examined and measured to determine their respective painted surface areas. In Test Series 4, due to the many different parts depainted in the blast room, the surface areas of these parts were measured at the time of testing. In addition to paint, most of the parts had residual engine grit and/or gasket material that also had to be removed during the depainting process. For certain parts, removing the grit and gasket as much as doubled the time for depainting. In order to account for this additional time, the painted surface area of each part was multiplied by a factor from 1 to 2. The

TABLE 4-1

IMB TEST PROGRAM MATRIX

Run #	Test Description	Blast Location	Materiel to be Blasted	Blast Media Vendor	Blast Media Grade	Blast Media Mesh	Nozzle Size (in)	Nozzle Angle (deg)	Nozzle Distance (in)	Blast Pressure (psi)	Media Flow Rate (lb/min)	Paint Type
1.0.0	Data Duplication	Cabinet	Smoke Generator/ 8V Small Parts	U.S. Technology	Type III	20-30	3/8	80	10	30	4	Conventional
1.0.1	"	"	"	"	"	"	"	"	"	"	"	"
1.0.2	"	"	"	"	"	"	"	"	"	"	"	"
1.0.3	"	"	"	"	"	"	"	"	"	"	"	"
1.0.4	"	"	"	"	"	"	"	"	"	"	"	"
1.0.5	"	"	"	"	"	"	"	"	"	"	"	"
1.0.6	"	"	"	"	"	"	"	"	"	"	"	"
1.0.7	"	"	"	"	"	"	"	"	"	"	"	"
1.1.0	"	"	"	Composition Materials	Plasti-Grit Hard	"	"	"	"	"	"	"
1.1.1	"	"	"	"	"	"	"	"	"	"	"	"
1.1.2	"	"	"	"	"	"	"	"	"	"	"	"
1.1.3	"	"	"	"	"	"	"	"	"	"	"	"
1.1.4	"	"	"	"	"	"	"	"	"	"	"	"

Arthur D Little

TABLE 4-1 (Continued)

IHB TEST PROGRAM MATRIX

Run #	Test Description	Blast Location	Materiel to be Blasted	Blast Media Vendor	Blast Media Grade	Blast Media Mesh	Nozzle Size (in)	Nozzle Angle (deg)	Nozzle Distance (in)	Blast Pressure (psi)	Media Flow Rate (lb/min)	Paint Type
2.0.0	Paint Removal/ Media Durability	Cabinet	Smoke Generator/ 8V Small Parts	U.S. Technology	PolyExtra	12-20	3/8	80	10	30	4	Conventional
2.0.1	"	"	"	"	"	20-30	"	"	"	"	"	"
2.0.2	"	"	"	"	"	30-40	"	"	"	"	"	"
2.0.3	"	"	"	"	PolyPlus	12-20	"	"	"	"	"	"
2.0.4	"	"	"	"	"	20-30	"	"	"	"	"	"
2.0.5	"	"	"	"	"	"	"	"	"	"	"	"
2.0.6	"	"	"	"	"	"	"	"	"	"	"	"
2.0.7	"	"	"	"	"	30-40	"	"	"	"	"	"
2.0.8	"	"	"	"	Type III	12-20	"	"	"	"	"	"
2.0.9	"	"	"	"	"	30-40	"	"	"	"	"	"
2.1.0	"	"	"	Aerolyte	3.5	20-30		"	"	"	"	"
2.1.1	"	"	"	"	4.0	12-20	"	"	"	"	"	"
2.2.0	"	"	"	Potter's	Melamine	20-30	"	"	"	"	"	"
2.3.0	"	"	"	Buhl Chemical	4.0	12-16	"	"	"	"	"	"
2.4.0				DuPont	Type L	20-30	"	"	"	"	"	"
2.4.1	"	"	"	"	"	30-40	"	"	"	"	"	"
2.5.0	"	"	"	MPC	Type M	20-30	"	"	"	"	"	"
2.5.1	"	"	"	"	"	"	"	"	"	"	"	"
2.6.0	"	"	"	Potters	Glass Beads	40-60	"	"	"	30	"	"
2.6.1	"	"	"	"	"	"	"	"	"	"	"	"
2.6.2	"	"	"	"	"	"	"	"	"	45	"	"
2.6.3	"	"	"	"	"	"	"	"	"	"	"	"
2.6.4	"	"	"	"	"	"	"	"	"	"	"	"
2.7.0	"	"	"	Composition Materials	Walnut Shells	12-20	"	"	"	"	"	"
2.7.1	"	"	"	"	"	"	"	"	"	"	"	"
2.7.2	"	"	"	"	"	"	"	"	"	"	"	"
2.7.3	"	"	"	"	"	"	"	"	"	"	"	"
2.7.4	"	"	"	"	"	"	"	"	"	"	"	"

Arthur D Little

TABLE 4-1 (Continued)

PMB TEST PROGRAM MATRIX

Run #	Test Description	Blast Location	Materiel to be Blasted	Blast Media Vendor	Blast Media Grade	Blast Media Mesh	Nozzle Size (in)	Nozzle Angle (deg)	Nozzle Distance (in)	Blast Pressure (psi)	Media Flow Rate (lb/min)	Paint Type
3.0.0	Parameter Optimization	Cabinet	Smoke Generator/ 8V Small Parts	U.S. Technology	PolyPlus	20-30	3/8	0	10	30	5-8	Conventional
3.0.1	"	"	"	"	"	"	"	"	"	"	"	"
3.0.2	"	"	"	"	"	"	"	"	4	"	4	"
3.0.3	"	"	"	"	"	"	"	"	16	"	"	"
3.0.4	"	"	"	"	"	"	"	"	10	45	"	"
3.0.5	"	"	"	"	"	"	"	"	"	30	5-8	"
3.1.0	"	"	"	Composition Materials	Plasti-Grit Hard	"	"	"	"	"	"	"
3.1.1	"	"	"	"	"	"	"	"	"	"	"	"
3.1.2	"	"	"	"	"	"	"	"	4	"	4	"
3.1.3	"	"	"	"	"	"	"	"	16	"	"	"
3.1.4	"	"	"	"	"	"	"	"	10	45	"	"
3.1.5	"	"	"	"	"	"	"	"	"	30	"	CARC
3.2.0	"	"	Smoke Generator	"	Walnut Shells	12-20	"	"	"	45	"	CARC

Arthur D Little

TABLE 4-1 (Continued)

IMB TEST PROGRAM MATRIX

Run #	Test Description	Blast Location	Materiel to be Blasted	Blast Media Vendor	Blast Media Grade	Blast Media Mesh	Nozzle Size (in)	Nozzle Angle (deg)	Nozzle Distance (in)	Blast Pressure (psi)	Media Flow Rate (lb/min)	Paint Type
4.0.0(a)	Material	Walk-In	Large/Medium	Composition	Plasti-Grit	20-30	1/2	80	18-30	65	6-9	Conventional
4.0.1	Variation	Blast Room	Sized Parts	Materials	Hard	"	"	"	"	65	"	and CARC
4.0.2	"	"	(Thin Aluminum	"	"	"	"	"	"	50	"	"
4.0.3	"	"	Thick Aluminum	"	"	"	"	"	"	50	"	"
4.0.4	"	"	& Steel)	"	"	"	"	"	"	60	"	"
4.0.5	"	"	"	"	"	"	"	"	"	55	"	"
4.0.6	"	"	"	"	"	"	"	"	"	50	"	"
4.0.7	"	"	"	"	"	"	"	"	"	50	"	"
4.0.8	"	"	"	"	"	"	"	"	"	50	"	"
4.0.9	"	"	"	"	"	"	"	"	"	60	"	"
4.0.10	"	"	"	"	"	"	"	"	"	60	"	"
4.0.11	"	"	"	"	"	"	"	"	"	55	"	"
4.0.12	"	"	"	"	"	"	"	"	"	50	"	"
4.0.13	"	"	"	"	"	"	"	"	"	45	"	"
4.0.14	"	"	"	"	"	"	"	"	"	50	"	"
4.0.15	"	"	"	"	"	"	"	"	"	40	"	"
4.0.16	"	"	"	"	"	"	"	"	"	40	"	"
4.0.17	"	"	"	"	"	"	"	"	"	40	"	"
4.0.18	"	"	"	"	"	"	"	"	"	40	"	"
4.0.19	"	"	"	"	"	"	"	"	"	40	"	"
4.0.20	"	"	"	"	"	"	"	"	"	40	"	"
4.0.21	"	"	"	"	"	"	"	"	"	40	"	"
4.0.22(b)	"	"	"	"	"	"	"	"	"	40	"	"
4.0.23	"	"	"	"	"	"	"	"	"	40	"	"
4.0.24	"	"	"	"	"	"	"	"	"	40	"	"
4.0.25	"	"	"	"	"	"	"	"	"	50	"	"
4.0.26	"	"	"	"	"	"	"	"	"	50	"	"
4.0.27	"	"	"	"	"	"	"	"	"	50	"	"
4.0.28	"	"	"	"	"	"	"	"	"	40	"	"
4.0.29	"	"	"	"	"	"	"	"	"	50	"	"

Arthur D Little

TABLE 4-1 (Continued)

INB TEST PROGRAM MATRIX

Run #	Test Description	Blast Location	Materiel to be Blasted	Blast Media Vendor	Blast Media Grade	Blast Media Mesh	Nozzle Size (in)	Nozzle Angle (deg)	Nozzle Distance (in)	Blast Pressure (psi)	Media Flow Rate (lb/min)	Paint Type
4.0.30	Material	Walk-In	Large/Medium	Composition	Plasti-Grit	20-30	1/2	80	18-30	50	6-9	Conventional
4.0.31	Variation	Blast Room	Sized Parts	Materials	Hard	"	"	"	"	50	"	and GAC
4.0.32	"	"	(Thin Aluminum	"	"	"	"	"	"	50	"	"
4.0.33	"	"	Thick Aluminum	"	"	"	"	"	"	60	"	"
4.0.34	"	"	& Steel)	"	"	"	"	"	"	60	"	"
4.0.35	"	"	"	"	"	"	"	"	"	60	"	"
4.0.36	"	"	"	"	"	"	"	"	"	60	"	"
4.0.37	"	"	"	"	"	"	"	"	"	60	"	"
4.0.38	"	"	"	"	"	"	"	"	"	40	"	"
4.0.39	"	"	"	"	"	"	"	"	"	40	"	"
4.0.40	"	"	"	"	"	"	"	"	"	40	"	"
4.0.41	"	"	"	"	"	"	"	"	"	40	"	"
4.0.42	"	"	"	"	"	"	"	"	"	40	"	"
4.0.43	"	"	"	"	"	"	"	"	"	40	"	"
4.0.44	"	"	"	"	"	"	"	"	"	40	"	"
4.0.45	"	"	"	"	"	"	"	"	"	50	"	"
4.1.0	"	"	"	"	Walnut Shells	12-16	"	"	"	60	"	"
4.1.1	"	"	"	"	"	"	"	"	"	50	"	"
4.1.2	"	"	"	"	"	"	"	"	"	40	"	"
4.1.3	"	"	"	"	"	"	"	"	"	50	"	"
4.1.4	"	"	"	"	"	"	"	"	"	50	"	"
4.1.5	"	"	"	"	"	"	"	"	"	50	"	"
4.1.6	"	"	"	"	"	"	"	"	"	70	"	"
4.1.7	"	"	"	"	"	"	"	"	"	70	"	"
4.1.8	"	"	"	"	"	"	"	"	"	70	"	"
4.1.9	"	"	"	"	"	"	"	"	"	70	"	"
4.1.10	"	"	"	"	"	"	"	"	"	80	"	"
4.1.11	"	"	"	"	"	"	"	"	"	80	"	"
4.1.12	"	"	"	"	"	"	"	"	"	80	"	"
4.1.13	"	"	"	"	"	"	"	"	"	80	"	"
4.1.14	"	"	"	"	"	"	"	"	"	80	"	"
4.1.15	"	"	"	"	"	"	"	"	"	50	"	

Arthur D Little

TABLE 4-1 (Continued)

HB TEST HARRAM MATRIX

Run #	Test Description	Blast Location	Materiel to be Blasted	Blast Media Vendor	Blast Media Grade	Blast Media Mesh	Nozzle Size (in)	Nozzle Angle (deg)	Nozzle Distance (in)	Blast Pressure (psi)	Media Flow Rate (lb/min)	Paint Type
4.2.0	Material Variation	Walk-In Blast Room	Large/Medium Sized Parts (Thin Aluminum Thick Aluminum & Steel)	Composition Materials and Potter's	Plasti-Grit Hard and Glass Beads	20-30 40-60	1/2	80	18-30	40	6-9	Conventional and CARC
4.2.1	"	"	"	"	"	"	"	"	"	40	"	"
4.2.2	"	"	"	"	"	"	"	"	"	40	"	"
4.2.3	"	"	"	"	"	"	"	"	"	40	"	"
4.2.4	"	"	"	"	"	"	"	"	"	40	"	"
4.2.5	"	"	"	"	"	"	"	"	"	40	"	"
4.2.6	"	"	"	"	"	"	"	"	"	40	"	"
4.2.7	"	"	"	"	"	"	"	"	"	50	"	"

(a) Blast room ventilation rate = 250 linear feet per minute (Test Runs 4.0.0-4.0.21)
(b) Blast room ventilation rate = 100 linear feet per minute (Test Runs 4.0.22-4.2.7)

Source: Arthur D. Little, Inc.

Arthur D Little

TABLE 4-2

PLASTIC MEDIA BLASTING TEST PROGRAM/SMALL PARTS TESTING INFORMATION
(SMOKE GENERATOR PARTS)

Item Description	National Stock Number (NSN)	Part No.	Material of Construction	Paint Surface Area (sq in)	Qty/Unit
A) Oil Pump Cover	1040-00-659-5174	C31-15-1238	Aluminum	15	1
B) Shroud	1040-00-659-5167	C31-15-1233	Aluminum	27	1
C) Oil Dis. Separator	1040-00-659-5180	C31-15-1251	Aluminum	12	1
D) Cylinder Oil Assembly	1040-00-658-5565	D31-15-1240	Aluminum	59	1
E) Valve Cover	4820-00-622-3400	D31-15-1300	Aluminum	75	1
F) Shroud	1040-00-659-5166	C31-15-1232	Aluminum	41	1
G) Cylinder End	1040-00-659-5172	C31-15-1236	Aluminum	19	1
H) Front Cover	----	---	Aluminum	75	1
I) Toolbox	----	E31-15-1448	Aluminum	925	1

Arthur D Little

TABLE 4-2 (Continued)

PLASTIC MEDIA BLASTING TEST PROGRAM/SMALL PARTS TESTING INFORMATION
(8V ENGINE PARTS)

Model No. 95

Item Description	National Stock Number (NSN)	Part No.	Material of Construction	Paint Surface Area (sq in)	Qty/Unit
A) Weight Cover Bracket	5315-00-252-5987	5108176	Steel	112	1
B) Pipe	----	5102826	Steel	84	1
C) Bracket	----	5131455	Steel	56	1
D) Bracket	----	5130495	Steel	31	1
E) Thermo Housing	2930-00-745-7828	5124286	Steel	120	1
F) Cover Assembly	2930-00-197-4849	5108324	Steel	124	1
G) Water Bypass Tube	2930-00-745-7833	5104548	Steel	135	1
H) Water Crossover Tube	2930-00-637-5033	5108341	Steel	173	1
I) Misc. Small Parts	----	---	Steel	20	3
J) Crankshaft Spacer	3120-00-855-5189	5132357	Steel	42	1
K) Unnamed Part	----	---	Steel	123	1
L) Bracket	----	---	Steel	45	1

Arthur D Little

TABLE 4-2 (Continued)

PLASTIC MEDIA BLASTING TEST PROGRAM/SMALL PARTS TESTING INFORMATION
(8V ENGINE PARTS)

Model No. 96

Item Description	National Stock Number (NSN)	Part No.	Material of Construction	Paint Surface Area (sq in)	Qty/Unit
A) Air Box Cover	2815-00-159-8753	5132458	Aluminum	24	4
B) Air Box Cover	2815-00-159-8754	5144186	Aluminum	43	2
C) Fly Wheel Cover	2815-00-902-1767	5122219	Steel	28	3
D) Fly Wheel Cover	2815-00-986-0489	5122281	Steel	47	2
E) Camshaft Damper	----	5189863	Steel	13	1
F) Air Housing	----	5136789	Aluminum	247	1
G) Camshaft Gear Cover	----	5122680	Aluminum	265	1
H) Pulley	3020-00-217-5707	5138717	Steel	46	1
I) Shaft	2815-00-961-9802	5117920	Steel	23	1
J) Valve Cover	2990-00-443-2103	5132550	Aluminum	450	1
K) Valve Cover	----	5140317	Aluminum	450	1
L) Damper	----	5109863	Steel	71	1
M) Elbow	----	---	Steel	112	1
N) Fuel Strainer Shell	----	5575893	Aluminum	105	1
O) Air Intake	----	5103041	Aluminum	464	1
P) Cross Over Tube	----	5102826	Steel	353	1
Q) Front End Plate	2815-00-855-5789	5132422	Steel	236	1
R) Misc. Small Parts	----	---	Steel & Aluminum	20	4
S) Unnamed Part	----	---	Steel	16	1
T) Elbow	----	---	Aluminum	133	1

Source: Arthur D. Little, Inc., based on information provided by LEAD personnel.

Arthur D Little

TABLE 4-3

PLASTIC MEDIA BLASTING TEST PROGRAM/LARGE PARTS TESTING INFORMATION

Item Description	National Stock Number (NSN)	Material of Construction	Paint Surface Area (sq ft)
A) Con[illegible]			
1) [illegible], 55 Engine	8145-00-064-6734	Steel	253
2) 8V, 96 Engine	8145-00-068-7617	Steel	259
3) XTG4211A Transfer	8145-00-064-3935	Steel	138
4) M411 Transmission	8145-00-064-5934	Steel	182
5) Hawk-Transmission	8145-00-900-7992	Steel	31.9
6) M109 Final Drive	8145-00-124-7632	Steel	31.4
7) M110 Final Drive, Right Set	8145-00-858-5655	Steel	48.0
8) M110 Final drive, Left Set	8145-00-858-5654	Steel	40.8
9) M110 Final Drive, Inside Assembly	-	-	5.1
10) 8V Shipping and Storage Container	8145-00-086-7617	Steel	267
B) Decontaminating Apparatus			
1) Water Tank	4230-00-735-9931	Stainless Steel	98.2
2) Water Tank Cover	4230-61-161-1610	-	2.4
3) Hose Reel	C5-45-3192	Steel	11.0
4) Blender	5340-01-191-5858	-	11.2
5) Pump Unit Frame Assembly	E5-45-2984	Steel	14
6) Various M2-12 Heater Unit Panels	-	Thin Steel	-
7) Various Power Unit Panels	-	Thin Steel	-
C) Miscellaneous Equipment			
1) Cover	-	Aluminum	20.6
2) M578 Engine Cover	-	Aluminum	15.3
3) 5250 Electronics Shelter	-	Aluminum	538
4) 175 mm Projectile	-	Brass/Steel	4.0
5) Missile Tip	-	Fiberglass	8.4
6) Plate Door and Grill	2J10-01-083-5411	Aluminum	10.7
7) Ration Box	2540-244-1321	Aluminum	13.4
8) Periscope Corner	2510-133-0984	Aluminum	5.3
9) Right Spade	2590-933-6260	Aluminum	11.0
10) Left Spade	2590-933-6259	Aluminum	11.0
11) Cooling Fan	4140-01-093-5829	Aluminum	11.2

Source: Arthur D. Little, Inc. based on information provided by LEAD personnel.

Arthur D Little

factors were based on a qualitative assessment of the average additional depainting time required to remove grit and gasket from a particular part. Table 6-3 summarizes these multiplication factors.

4.3 Test Runs

Prior to the beginning of each test run, the blast parameters for the run were verified by the engineer and blast operator and recorded in the Media Log Book (Table 4-4).

Each test run consisted of approximately three to four hours of blast time. Depainting or blast time was measured with a time clock activated by the depression of the foot treadle for the blast cabinet. In the walk-in blast room the clock was connected to a pressure switch which was activated only when the operator was blasting and consequently only the actual blast time was recorded. The length of time to load and unload parts into the cabinet or room, and to refill the pressure pot with media was not included in the blast time measurement.

The blast pressure recorded in the Media Log Book is the pressure reading at the gauge, not the pressure at the end of the nozzle. There is a 8 to 10 psi pressure drop from the gauge to the nozzle. This applies to the tests run in the blast cabinet as well as the walk-in blast room.

The items undergoing blasting were recorded in the Parts Log Book (Table 4-5). For each part, the paint thickness was determined using a Minitector 150 Thickness Gauge (for aluminum parts), or an Inspector Thickness Gage (for steel parts). See Appendix C for measurement procedures for both these gauges. The condition of the paint prior to depainting was also noted in the Parts Log.

During each blast cabinet test run, the smoke generator parts were depainted as sets of eight parts. The 8V engine parts were depainted separately or in groups of two to eight parts, depending on the anticipated length of depainting time required for the set. The toolboxes were blasted one at a time. Typically, during a test run, three toolboxes, two sets of smoke generator parts and various 8V engine parts were depainted. Every effort was made to achieve consistency in the number and types of parts depainted. Occasionally, exceptions were made due to the unavailability of certain parts or the time constraints of a given test.

At the start of each blast cabinet test run approximately 30 pounds of new media was added to the blast system. After 60 minutes of blast time, an additional 10 pounds was added and after 120 minutes, another 10 pounds was added. The amount of media added was recorded in the Media Log Book.

When the depainting of a set of parts was completed, the elapsed blast time was recorded. The engineer and the operator removed the parts from the cabinet and conducted a visual inspection of the depainted

TABLE 4-4

MEDIA LOG

Day _____ Operator _____

Date _____ Engineer _____

Run _____

Media

Manufacturer _____

Grade _____

Mesh Size _____

Blasting Parameters

Air Pressure _____ PSI

Nozzle Distance _____ Inches

Nozzle Angle _____ Degrees

Nozzle Size _____ Inches

Flow Rate _____ lbs/min

Materiel Being Depainted _____

Blast Facility Walk-In Room/Cabinet (circle one)

lbs of Media					
Start	Added	Added	Added	End	Waste
( )[a]	( )[a]	( )[a]	( )[a]	( )[a]	( )[a]
Total grams					
÷ 454 g/lb					
(a)	(b)	(c)	(d)	(e)	

Pounds of media added (a+b+c+d) _____ (f)

Pounds of media at end (e) _____ (g)

Pounds of media consumed (f-g) _____

[a] Time as recorded by nozzle timer

Source: Arthur D. Little, Inc.

TABLE 4-5

PARTS LOG

Day _____ Operator _____

Date _____ Engineer _____

Run _____

Part Depainted	Paint Thickness (mils)	Start Time[a]	Finish Time[a]	Paint Condition

(a) Time as recorded by nozzle timer

Source: Arthur D. Little, Inc.

Arthur D Little

parts. Any surface damage produced by the media and/or remaining corrosion were recorded both in the Parts Log Book and in the Arthur D. Little Laboratory Notebook. More parts were then loaded into the cabinet, and blasting was continued.

The dust collector was checked hourly to determine that the recycle system was adjusted properly. An electric shaker was activated to remove the dust from the filters. The collected dust was weighed and its weight recorded. If the recycle air inflow rate was set too high and a significant amount of good media was found in the dust collector, this good media was separated from the fine dust and paint residue and returned to the feed hopper. The recycle air inflow rate was then decreased to reduce media loss.

To determine media breakdown, sieve analyses were performed at the beginning of the run, during the test run and at the end of the test run on samples of both system media and waste (from the dust collector) media. Sieve analysis results were recorded in the Media Size Log Book (Table 4-6).

Each day, media flow rate tests were conducted. This was done by recording the length of time to blast a known quantity of media out of the feed system. The media flow rate valve was adjusted to obtain the desired flow rate.

At the end of each test run, the media in the system was recovered and its weight was recorded.

At the end of the test run, the total blast time was recorded. Overall comments regarding the quality and effectiveness of the day's blasting were noted. Comments typically focused on such issues as: difficulties in maintaining blast parameters, excessive dust generation, problems with blast equipment, etc. Engineer and operator comments were recorded in the Arthur D. Little Laboratory Notebook.

The walk-in blast room tests were performed similarly to the blast cabinet tests, with four main differences: (1) much larger equipment parts were selected for depainting; (2) media was added in 250 pound increments instead of 10 to 20 pound increments; (3) due to the volume of the system, the system was not purged at the end of each run, rather the media level in the feed hopper was measured at the end of each test run; and (4) due to time limitations, flow rate tests were not carried out each day.

4.4 Test Series 1

Two sets of reproducibility test runs were performed in the blast cabinet using the standard blast parameters (30 psi blast pressure, 10 inch blast stand off distance and 3.7 to 4.5 lb/min media flow rate). In the first set of eight runs, U.S. Technology Type III (20-30 mesh) plastic blast media was used. In the second set of five runs, Composition Materials Plasti-Grit Hard (20-30 mesh) plastic blast media

TABLE 4-6

MEDIA SIZE LOG

Day _____ Operator _____

Date _____ Engineer _____

Run _____

Initial Media Size	Time of Sampling	Weight of Sample	Weight ≤12 mesh	Weight ≤20 mesh	Weight ≤30 mesh	Weight ≤40 mesh	Weight ≤60 mesh

Overall Comments

_____

_____

_____

_____

_____

_____

_____

_____

_____

Source: Arthur D. Little, Inc.

was used. These medias were chosen because they were the most commonly used medias at LEAD. For one of the reproducibility runs in each set, only smoke generator toolboxes were depainted in order to investigate any variation in paint removal rate related to the processing of an atypical set of parts.

4.5 Test Series 2

Using standard blast parameters, 15 additional types of plastic blast media were tested. The media tested during Test Series 1 and 2 are listed in Table 4-7. In addition to the plastic media tests, six comparative test runs were conducted with glass beads and five with walnut shells. Four of the runs conducted with glass beads and the five runs with walnut shells were conducted at 45 psi blast pressure. Two of the glass bead runs were conducted at 30 psi blast pressure (that used for plastic media) for comparison.

4.6 Test Series 3

Test Series 3 was conducted using Composition Materials Plasti-Grit Hard (20-30 mesh) and U.S. Technology PolyPlus (20-30 mesh). For each type of media, one blast parameter at a time was varied during each run. The alternate parameters tested were: 45 psi blast pressure, 4 and 16 inch blast stand off distances, and 5 to 8 lb/min media flow rate. Test runs were then carried out using Composition Materials and walnut shells at the standard blast parameters with CARC painted parts.

4.7 Test Series 4

Composition Materials Plasti-Grit Hard (20-30 mesh) was used in Test Series 4. This test series was conducted in the walk-in blast room and focused on large equipment items such as electronic shelters, containers, M2 heater and M2-12 pump unit panels, and projectiles. Blast pressures were varied from 40 to 60 psi and blast stand off distance ranged from 18 to 30 inches. Blast room ventilation rate was varied from 250 to 100 fpm. The equipment items selected for this test series were constructed of many different materials: thin and heavy steel, stainless steel, thin and thick aluminum, fiberglass, brass, and copper. Fifteen tests with walnut shells as the blast media were also conducted in the walk-in blast room at 50, 70, and 80 psi for comparison to PMB. Also, to investigate improved rust removal, seven tests were performed at 40 psi using a combination of 80% plastic media and 20% glass beads.

TABLE 4-7

PLASTIC BLAST MEDIA TESTED IN TEST SERIES 1 AND 2

Supplier	Number of Grades	Number of Mesh Sizes (per Grade)
Aerolyte Systems (Division of Clemco Industries Corp.)	2	1
Budd Chemical	1	1
Composition Materials Co., Inc.	1	1
E. I. Du Pont De Nemours and Co., Inc.	1	2
MPC Industries	1	1
Potters Industries Inc.	1	1
U.S. Technology Corp.	3	3

Source: Arthur D. Little, Inc.

5.0 OPERATING EXPERIENCE

The experience gained during the test program in retrofitting and operating the blast cabinet and in preparing specifications, purchasing, installing and operating the walk-in blast room, have provided important insights which may be useful for those anticipating the purchasing and operation of such facilities. These insights are discussed in the following two sections.

5.1 Blast Cabinet

Test series 1, 2 and 3 were conducted in an Empire Abrasive Equipment Corporation ProFinish blast cabinet. Figure 5-1 is a schematic of the ProFinish blast cabinet system. Operational considerations and certain recommended blast cabinet equipment specifications are identified below:

- The feed system is the first concern. A pressure rather than suction feed system is recommended to provide higher conveying velocities and greater volumes of media at the blast nozzle. A pressure feed system has been reported to be 25 to 30% more efficient in paint removal with plastic media than a suction feed system (11). Another concern with the feed system is that the media tended to stick to the feed hopper walls. An automatic tapping device (which our system did not include) on the feed hopper would perhaps have improved the flow of media to the pressure pot.

- The ProFinish blast cabinet reclaimer system utilized a cyclone for media separation. The cyclone adequately separated all types of abrasive blast media (i.e., plastic, glass, and walnut shells) tested. The cyclone should include an adjustable control to regulate air flow into the cyclone as our system did. Fine tuning the media reclaimer minimizes the loss of reusable media which is particularly important for plastic media due to the high purchasing cost of the media.

- In addition to the cyclone separator, a collection screen (included in our system) is needed in the feed hopper to prohibit large paint chips and debris from returning to the pressure pot and clogging the media feed system.

- It is recommended to manually remove rubber gasket material as much as possible from equipment items prior to blasting to minimize the debris in the system and subsequent plugging problems.

5.2 Walk-In Blast Room

Test Series 4 was conducted in a Pauli & Griffin PRAM walk-in blast room. Figure 5-2 is a schematic of the blast room. Purchasing and operational considerations are discussed below:

FIGURE 5-1
SCHEMATIC OF BLAST CABINET

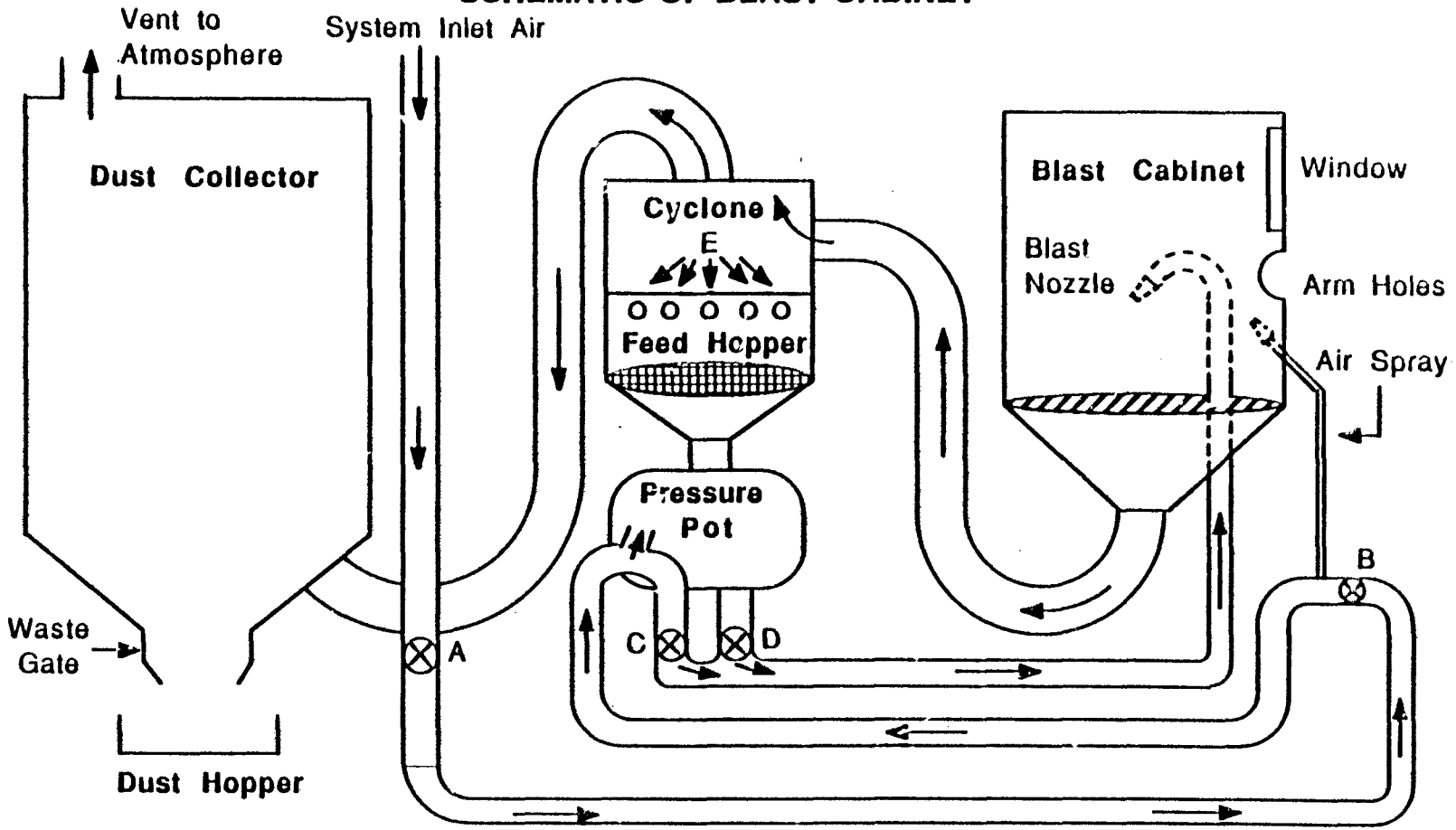

A) Valve to control inlet air from building (always open)
B) Pressure regulator
C) Ball valve to control air flow to blast nozzle
D) Valve w/ T handle to control media flow to blast nozzle
E) Recycle port holes

Dust Collector: 38 1/2" x 33" x 81"
Blast Cabinet: 48 1/2" x 47" x 70"
Cyclone: - diameter: 24"
- height: 71"
(excluding pressure pot)

Source: Arthur D. Little, Inc.

FIGURE 5-2
SCHEMATIC OF WALK-IN BLAST ROOM

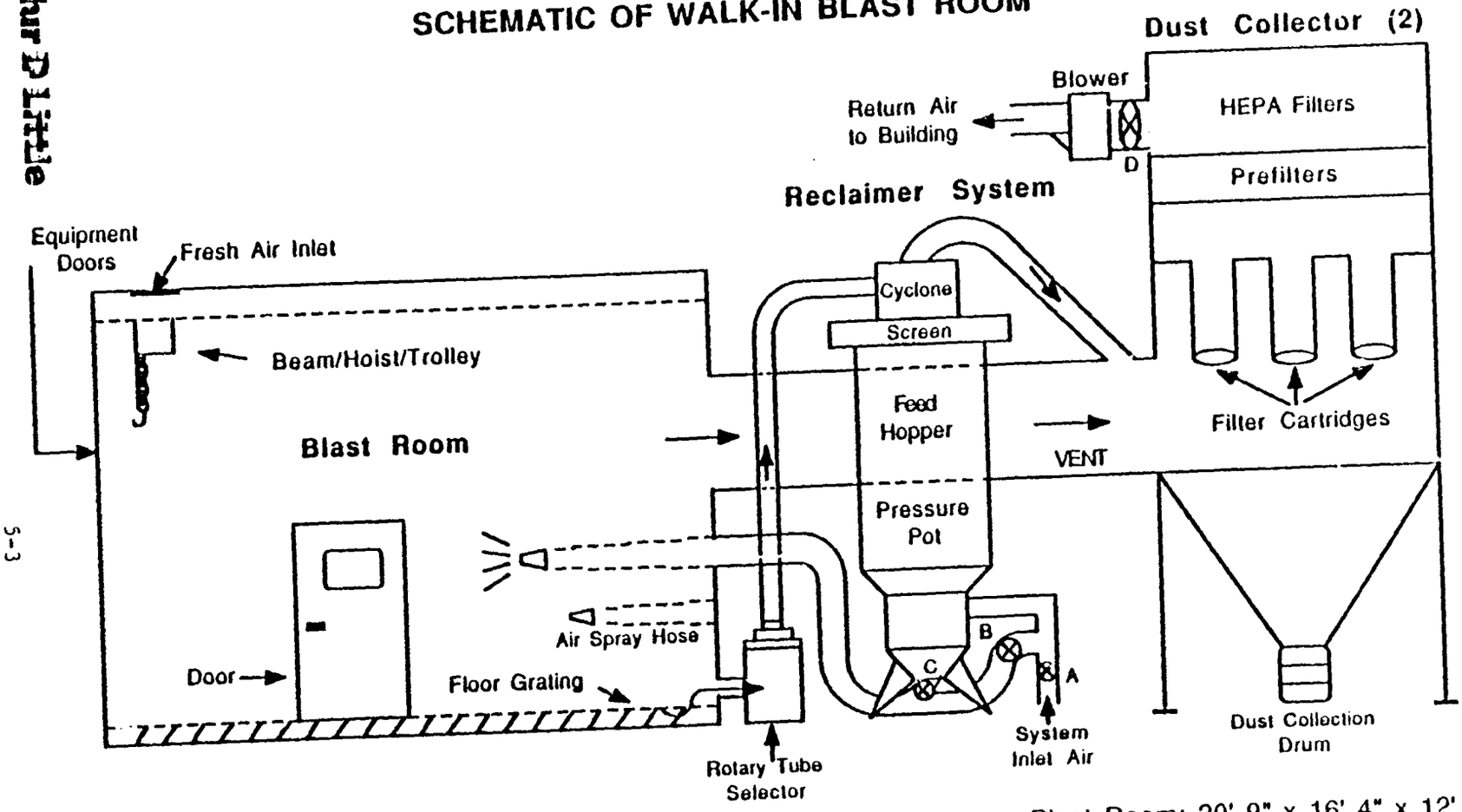

A) Pressure regulator
B) Ball valve to control air flow to blast nozzle
C) Valve to control media flow to blast nozzle
D) Gate to control ventilation flow in blast room

Blast Room: 20' 9" x 16' 4" x 12'
Reclaimer System: 12' 8" x 3' dia.
Dust Collector: 7' x 17' 8" x 18' 9"

Source: Arthur D. Little, Inc.

- The location of the blast room within an existing facility is the first concern. The dimensions of the available space must be measured including ceiling clearance to determine that the room and associated equipment will fit.

- Adequate lighting in the blast room must be provided and is critical to efficient blast operator performance.

- As in the blast cabinet, the media handling and recovery unit must include a screen to separate out large paint chips and debris from the usable media. The recovery equipment must provide fine tuning in order to minimize loss of reusable media.

- The type of dust collector to be utilized is an important concern. In general, cartridge-type filter units provide higher efficiency and require less maintenance than bag-type filter units. The dust collector blower must have adequate capacity to achieve the desired ventilation rates within the blast room. Department of Defense health and safety officials require an average air velocity of 100 fpm. This specification was originally designed for blast facilities using walnut shells which generate higher levels of dust than plastic media and can create potential explosion hazards during the blasting operation. Lower ventilation rates may be adequate for blast facilities using plastic media due to the lower levels of dust generated. The required ventilation rate dictates the capacity of the blower and size of the dust collector unit, and consequently considerable savings can be realized using the lower ventilation rates. For facilities that recirculate the air from the filter system back into the building, a high efficiency particulate air (HEPA) filter system with an appropriate alarm system is likely to be required to ensure that OSHA regulations limiting dust containing heavy metals in the work atmosphere are met. HEPA filters also act as a backup in the event of a failure of the cartridge-type filters. The HEPA filter system may increase the cost of the total installation by as much as 10 percent. If the air is exhausted outside, local air pollution regulations apply, and the need for backup filters would be dictated by these regulations.

- The next item with regard to the room's specifications is whether the room will have an automatic media recovery system or a manual system. In the automatic system, the blast media drops through grates and screens in the floor and is automatically returned to the media recycling unit by mechanical or pneumatic conveyance. In contrast the manual system's floor is typically solid concrete, and the media and paint residue are pushed with brooms or squeegees to one corner, where the media drops into a recovery pit or is shovelled by the operators into a recovery hopper and conveyed mechanically or pneumatically to the recycling unit. The recovery floor reduces abrasive blasting labor requirements by as much as 25%, but it represents a significant part of the total investment in a PMB room,

amounting to as much as one third to one half of the total installed cost. A cost/benefits analysis of an automated versus manual recovery system should therefore e performed.

- The floor grates in the blast room must be securely in place, otherwise debris and large paint chips can fall through gaps around the grates and plug the media recovery system. For instance in the Pauli and Griffin blast room, bumpers were installed to prevent the floor grates from sliding up the angled blast room walls. Also, the strength of the floor grates must be adequate. If the grates cannot handle the weight of some of the heavy equipment being depainted, the floor grates will warp allowing gaps to develop between grates. The weight of the equipment must also be considered when sizing the hoist mechanism, if one is used in the room.

- It is critical that the blast room, the media handling and recovery unit, the dust collector, and the media recovery systems are all well sealed against water entry from rain or snow. Water causes plastic media to agglomerate and leads to plugging and poor media flow. Water will also damage the cartridges and filters in the dust collection system. Tight seals are also necessary around the doors in the blast room and on the floor seams below the grating, so that the media stays within the blast system and does not fall onto the outside floor. Not only does this waste media, but it also requires frequent sweeping to keep the work area clean.

- The blast hose and ducting hose in the blast system carry abrasive media through the reclaimer and feed systems. This abrasive material will wear away the rubber in the hose and may eventually wear a hole through the wall of the hose. This problem is most severe where there are sharp bends in the hose. It is worthwhile to get high-quality abrasion-resistant hose to minimize the downtime for hose repair or replacement. In some reclaimer systems, flexible stainless steel ducting is used to reduce the wear problem. Also, any tubing such as that used for pneumatic controls, which is exposed to the weather should be constructed of a material (such as flexible copper tubing) that is resistant to ultraviolet light and extreme weather conditions.

- An important consideration in procurement of a PMB room is the experience of the manufacturer in design and construction of rooms specifically for plastic media use. Although it may be possible to adapt designs of rooms and recovery systems used for other types of media for use with plastic, there are some significant differences:

  - Steeper sloped walls in the feed hopper and pressure pot are required for plastic to ensure that the plastic media feeds properly and does not bridge.

  - The mechanical conveyor feeding system normally used with steel shot media is not an efficient method for the transportation of

plastic because the conveyor may crush the plastic media as it is transported to the reclaimer system. Consequently, air conveyance is normally used.

- The overall construction of the room does not have to be as heavy duty with PMB as with more aggressive medias such as glass beads and particularly steel shot. In many instances though, the wide variety of duties, functions and applications at Army depots warrants heavy duty construction of all blast booths, because one cannot be sure that PMB will be used exclusively throughout the operating life of the booth. For instance, the addition of glass beads to the plastic media to improve rust removal was responsible for wearing a hole through the cyclone separator after only two months of operation.

- Compared to walnut shell blasting, PMB produces less dust and the required ventilation rates may be lower.

- Finally, there are several instances where PMB facilities have been secured on a low-bid basis from companies that had little or no experience with the design and manufacture of PMB facilities, resulting in procurement of some very troublesome and inefficient PMB facilities.

6.0 TEST SERIES 1 RESULTS AND ANALYSIS

6.1 Results

Test Series 1 was conducted from December 1987 to January 1988. Table 6-1 summarizes the results of Test Series 1. Appendix D lists all the actual depainted parts whose surface areas were added together to get the value of the total surface area depainted that is listed in Table 6-1.

In addition to the tests outlined in the test plan, three additional tests were run on U.S. Technology Type III media. The first five test runs had some inconsistencies due to difficulties standardizing the test procedure. The following is a list of problems encountered during the first five days of testing:

- At the beginning of the test program, a 3 lb/min media flow was planned. Test Run 1.0.0, the first test run of the program, showed that at this media flow valve setting, the media flow was inconsistent and surging occurred. Intermittent flow and surging increased the amount of time to depaint the parts and, consequently, decreased the paint removal rates. Based on this experience, the media flow valve was opened further and the tests were run from 3.5 to 4.7 lb/min, the minimum flow at which the equipment seemed to produce a steady media blast.

- Test Run 1.0.7 was run at approximately 7.5 lb/min to determine if the blast system would operate more efficiently. At the higher flow rate, although there were no plugging problems, the flow rate was inconsistent, and media consumption was higher than during the previous Test Runs 1.0.5 and 1.0.6.

- After Test Run 1.0.3, it was determined that using the original procedure the system was not completely emptied at the end of a run and residual media remained in the system. As a result, the media consumption values were inaccurately high. A modified method for emptying the system was implemented after Test Run 1.0.3, and documented in the operating procedure. As previously mentioned, this procedure is found in Appendix A.

- The media recycle system was not optimally adjusted during Test Runs 1.0.0 to 1.0.4. Media consumption rates reported during these runs were therefore inaccurate. To accommodate the changing media flow characteristics due to media breakdown during blasting, the operating procedure was modified to include an hourly recycle system inspection and calibration.

- The blast operator was a novice to cabinet blasting at the start of the test program. In the first three test runs (1.0.0, 1.0.1, 1.0.2), the operator's performance was somewhat inconsistent and inefficient, but after two or three days of testing, the operator developed a consistent routine for blasting. For example, the

TABLE 6-1
TEST SERIES 1: RESULTS

TEST RUN NO.	MEDIA TYPE	MEDIA SIZE (mesh)	MEDIA HARDNESS (mohs)	MEDIA FLOW RATE (lbs/min)	TOTAL TIME OF RUN (min)	SURFACE AREA DEPAINTED (sq in)	MEDIA CONSUMED (lbs)	PAINT REMOVAL RATE (sq in/min)	MEDIA CONSUMPTION RATE (lb/hr)	MEDIA RECYCLE (%)
1.0.0	US TECH TYPE III	20-30	4.0	4.7	173	8914	40.0	52	13.9	95.1
1.0.1	US TECH TYPE III	20-30	4.0	4.7	190	5191	44.0	27	13.9	95.1
1.0.2	US TECH TYPE III	20-30	4.0	4.7	198	10164	24.8	51	7.5	97.3
1.0.3	US TECH TYPE III	20-30	4.0	4.7	215	6978	30.0	32	8.4	97.0
1.0.4	US TECH TYPE III	20-30	4.0	4.7	187	7185	33.9	38	10.9	96.1
1.0.5	US TECH TYPE III	20-30	4.0	4.0	168	6923	17.8	41	6.4	97.4
1.0.6	US TECH TYPE III	20-30	4.0	3.6	134	5252	9.3	39	4.2	98.1
1.0.7	US TECH TYPE III	20-30	4.0	7.5	200	11361	19.4	57	5.8	98.7
1.1.0	COMPOSITION MATERIALS	20-30	3.5	3.6	169	12012	8.5	71	3.0	98.6
1.1.1	COMPOSITION MATERIALS	20-30	3.5	3.6	152	8765	7.7	58	3.0	98.6
1.1.2	COMPOSITION MATERIALS	20-30	3.5	3.6	148	6924	6.1	47	2.5	98.9
1.1.3	COMPOSITION MATERIALS	20-30	3.5	3.6	159	7861	8.7	49	3.3	98.5
1.1.4	COMPOSITION MATERIALS	20-30	3.5	3.3	165	8185	8.5	50	3.1	98.4

Source: Arthur D. Little, Inc.

operator determined that blasting first the inside of a toolbox, then the outside, was faster than vice versa, because blasting the outside slightly warped the toolbox walls making it more difficult and time consuming to get the proper blast angle to clean the inside of the box. Also, when blasting several small parts at once, it was more efficient to hold the parts being depainted over the basket of parts yet to be depainted, so that random blast spray hit these parts and began depainting them also.

- The plunger between the feed hopper and pressure pot was sticking and not properly allowing media to flow into the pressure pot. This increased the test run downtime and decreased the total blast time of the test. After Test Run 1.0.2, a new plunger was installed to correct the problem.

- Periodically, large flakes of paint or pieces of gasket came off the parts during blasting. This debris lodged in the opening at the bottom of the pressure pot and disrupted the flow of media. Four test runs (1.0.0 to 1.0.3) were completed before this problem was identified. An additional screen was installed, and a method of purging the system was developed. The operating procedure was modified to include a purging step (see Appendix A).

The total blast time for each test run in Test Series 1 was 25 to 106 minutes less than the anticipated four hours. Start up difficulties leading to shorter blast times included: standardizing blast procedures with the blast cabinet operators; familiarizing depot personnel with the test program; and developing troubleshooting techniques for the blast cabinet system.

6.2 Analysis

Although Test Runs 1.0.0 through 1.0.4 were not analyzed for test reproducibility due to the start up difficulties outlined in Section 6.1, these runs were both valuable and necessary to provide the operating experience to standardize and optimize the test procedure. The operating procedure described in Appendix A is the result of these five tests.

The two key parameters used to evaluate abrasive blast media performance were paint removal rate and media consumption rate. Paint removal rate was used to assess depainting efficiency. Media consumption rate was used to quantify media durability. The rate of media consumption is important not only in terms of media purchasing costs but also in terms of downstream waste disposal costs.

Media consumption rate was calculated as follows:

$$\frac{\text{Media consumed (lb)}}{\text{Run Time (min or hr)}}$$

Due to the variability in media flow rate, the media recycle percent equation:

$$1 - \frac{\text{Media Consumed (lb)}}{\text{Media Flow Rate (lb/min) x Run Time (min)}} \times 100$$

was not used in the evaluation of media durability. The media flow rate changes occurred during the flow rate tests and also during the course of the test runs. Under identical conditions, flow rates sometimes varied as much as 100%. Test Run 1.1.4 is a good example of this flow rate variability. At a media flow value setting of 21, three flow rates were measured: 2.4, 3.1 and 4.5 lb/min. Appendix E lists the flow rate test results and the media flow valve settings for each test. Since there was considerable variation, it was difficult to assign a flow rate to the day's test run based on only two or three test results. Therefore, flow rates for the test runs of Test Series 1 and Test Series 2 where plastic media was used were assigned according to the T-screw setting of the media flow valve. These assigned flow rates were based on the average media flow rate calculated from all flow rates achieved at a particular T-screw setting. Table 6-2 lists the T-screw settings and the average media flow rates for each setting.

The value for media consumed in these formulas is equal to the amount of media and paint chips collected in the waste collection system. Typically 90 to 95% of this media passed through a U.S. Standard 60 mesh screen. The Navy specification (10) refers to media that passes through a 30 mesh screen as media consumed. Therefore, the recycle rates reported in this study may be higher than those values reported elsewhere.

Media flow rate variability during the test run was due primarily to media breakdown. As the blast media broke down, it tended to flow more easily in the system and increase the media flow rate. Since the priority of the test program was to run the system under optimum steady-state conditions, the engineer often had to adjust the screw setting during the course of the test run to maintain a consistent flow rate. This adjustment affected the calculation of media recycle which is a function of media flow rate.

Media consumption rate, on the other hand, is not a function of the media flow rate and is calculated directly from waste generation and the corresponding blast time. As long as the system was operated under similar conditions, the media consumption rate is a more accurate way to compare test results. However, because the PMB industry often refers to media recycle percent, this data is reported for comparison.

A sensitivity test was calculated to investigate the importance of the variable flow rates on the media recycle percent. Using a base case of 200 minutes of blast time and 15 pounds of media consumed, the flow rate was varied from 3.0 to 5.0 lb/min and the change in recycle percent was calculated. The results are shown below:

TABLE 6-2

AVERAGE MEDIA FLOW RATES AT VARIOUS MEDIA FLOW VALVE SETTINGS

T-Screw Setting on Media Flow Valve	Number of Tests	Average Media Flow Rate (lb/min)	Standard Deviation
20	6	3.3	1.0
21	10	3.6	0.81
22	24	4.0	1.2
23	11	4.7	1.7
24	4	4.9	1.5

Source: Arthur D. Little, Inc.

Flow Rate (lb/min)	Media Recycle (%)
3.0	97.50
3.5	97.86
4.0	98.13
4.5	98.33
5.0	98.50

From these results, it can be concluded that a change in flow rate of 2 lb/min produces a 1.0% change in media recycle percent. This change is significant due to the fact that almost all the media recycle percents are in the 97 to 98% range.

Finally, at some depots, media consumption is reported in terms of lb media consumed/sq ft surface area depainted. If desired, the test program results listed here can be converted to such units by dividing the media consumption rate by the paint removal rate for each test run.

6.2.1 Paint Removal Rate

The paint removal rate was calculated using the following equation:

$$\frac{\text{Total Surface Area Depainted (sq in)}}{\text{Total Time of Test Run (min)}}$$

Once the test procedure was standardized, two factors which affected the variability of test results were identified: (1) the types of parts processed; and (2) the nature of the paint coating. These factors are addressed below. The paint removal rates of Test Series 4 are then discussed.

Part Variability - To determine the importance of part consistency, Test Runs 1.0.2 and 1.1.0 were conducted depainting only toolboxes. Toolboxes were the largest parts depainted during the blast cabinet tests and have the largest flat painted surface area. It appeared that more surface area of paint can be removed from large flat surfaces per minute than from smaller equipment pieces with lots of curves and corners. The test results proved this to be true. Blasting only tool boxes during Test Run 1.0.2 with U.S. Technology Type III (20-30 mesh), the paint removal rate was 51.3 sq in/min. This rate was 11.1 sq in/min higher than the average of Test Runs 1.0.5 and 1.0.6 (40.2 sq in/min) which were conducted under the same blast conditions but with the standard assortment of small parts.

Using Composition Materials Plasti-Grit Hard (20-30 mesh), the test runs showed a removal rate of 71.1 sq in/min when blasting only toolboxes (Test Run 1.1.0) and an average paint removal rate of

50.9 sq in/min when blasting the standard assortment of small parts (Test Runs 1.1.1, 1.1.2, 1.1.3, and 1.1.4). These results indicate that it is essential to blast the same selection of parts for each test, or the paint removal rates are not comparable between tests. Based on the availability of parts at the depot, a group of parts for depainting was selected for each test. This selection is noted in Section 4.4.

Paint Coating - The following comments apply to conventional paint systems which still represent the vast majority of paint on materiel processed in the depots. Any parts painted with CARC were set aside for separate CARC tests. The conventional paint coatings on the parts depainted differed considerably in age, condition, thickness and type of paint and the amount of time needed for depainting varied accordingly. Three paint coating variables were noted as having a marked effect on paint removal: paint thickness, paint blistering and paint adhesion.

Paint thickness for a given set of smoke generator parts varied from 2 to 9 mils and from as much as 1 to 11 mils for a set of 8V engine parts[a]. The parts may have previously been painted at one of many depots, in the field, or at a contracting facility, each employing different painting procedures with varying amounts of quality control.

Not surprisingly, a thick coat of paint took longer to remove than a thin coat of paint. With a thick coat of paint, as much as three times the blasting time was required to cut through the paint and reach bare metal as with a thin paint coating.

Variation in the amount of blistering of the paint also affected paint removal rate. In general, the more blistered a given part, the less time required for paint removal. Blistered paint tended to be removed in large flakes while unblistered paint came off more slowly in small specks. The amount of paint blistering generally correlated closely to the length of time a given part had soaked in a degreaser tank. Degreasing operations (degreaser tanks located on the LEAD production floor) are employed prior to most depainting blast operations for removing grease and oil from equipment parts.

Although paint blistering tended to promote more rapid paint removal, paint blistering also had a negative effect on the paint removal rate due to mechanical problems in the system. When the large flakes of paint went through the recycle system, they clogged the valve opening at the pressure pot outlet and caused the media flow rate to vary, reducing paint removal rate. This may have been a consequence of the blast cabinet system, however, since at the beginning of the test program, when the blast cabinet system was converted from suction to pressure feed for use with plastic media, the standard built-in feed hopper screen had to be replaced with a removable feed hopper screen.

---

[a] Arthur D. Little, Inc. Parts Log

This removable screen was less efficient at stopping paint flakes and gasket pieces from recycling through the system. When clogging did occur, the operator purged the system and blasting operations were resumed.

Paint adhesion to the part surface varied considerably. We were advised by LEAD personnel that most parts were painted with either a chromate conversion coating (on aluminum parts) or a phosphate coating (on steel parts) and a primer coating and alkyd enamel top coat (on all parts). The paint on properly prepared parts was removed in fine specks. However, on other parts, the undercoatings necessary for good paint adhesion did not appear to have been applied. Furthermore, some parts had been undercoated but these coats had not adhered well due to unclean surfaces at the time of painting. When the paint had not adhered well, it tended to come off in flakes similar to flakes associated with blistered paint and less time was required for paint removal. Poor paint adhesion was particularly noticeable on some smooth aluminum parts such as the smoke generator toolboxes and the 8V engine parts J and K (see Figure B-3). These parts did not have a natural anchor pattern to bond the paint.

The paint thickness, and degree of paint blistering and adhesion for each part were noted in the Parts Log Book but were not used to adjust the calculated paint removal rates. This was due to the fact that:

(1) There was considerable variation in paint thicknesses both on a single part and within a set of smoke generator or 8V engine parts.

(2) There was also considerable variation in blistering and adhesion between sets of smoke generator or 8V engine parts tested in a single run. The painting history of each set varied considerably as did the length of time each set spent in the degreaser tank. It was not feasible to factor these qualitative observations into the quantitative calculation. In addition, since approximately 40 different equipment parts were typically blasted on a daily basis, it was assumed that the variations in paint thickness, adhesion and blistering would tend to average out over the entire daily test run. However, these variations undoubtedly contributed to some of the variability noted in the results.

Surface Area Depainted - As described in Section 4.3, each part was measured for painted surface area prior to the beginning of the blast test program. In addition, gasket material and grit on the item had to be removed. The amount of time to remove gasket and grit on each part was estimated and subsequently factored into the overall effective surface area. Table 6-3 shows the effective surface area calculation for each part. The multiplication factor shown in this table was based on a qualitative assessment of the additional time

TABLE 6-3

CALCULATIONS TO DETERMINE EFFECTIVE SURFACE AREA

	Part	Actual Paint Surface Area (sq in)	Grit and Gasket Adjustment Factor	Effective Surface Area (sq in)
8V Engine (Model 96)	A	24	1.6	38
	B	43	1.6	69
	C	28	1.2	34
	D	47	1.2	56
	E	13	2.0	26
	F	247	1.3	321
	G	265	1.2	318
	H	46	1.5	69
	I	23	1.5	34
	J	450	1.2	540
	K	450	1.2	540
	L	71	1.1	78
	M	112	1.3	146
	N	105	1.2	126
	O	464	1.1	510
	P	353	1.1	388
	Q	236	1.1	260
	R	20	1.6	32
	S	164	1.1	180
	T	133	1.0	133
8V Engine (Model 95)	A	112	1.0	112
	B	84	1.0	84
	C	56	1.0	56
	D	31	1.0	31
	E	120	1.6	192
	F	124	1.1	136
	G	135	1.0	135
	H	173	1.0	173
	I	20	1.2	24
	J	42	1.0	42
	K	123	1.2	148
	L	45	1.0	45
Smoke Generator	Toolbox	924	1.0	924
	Fog Oil Pumps	329	1.5	494

Source: Arthur D. Little, Inc.

required for gasket and grit removal. This assessment was made after 2 months of testing, when sufficient experience had been accumulated to make this judgement.

Paint Removal Rate - As mentioned previously, data from Test Runs 1.0.0 through 1.0.4 were not used in evaluating paint removal rates due to system start up difficulties. Also, the paint removal rate from Test Run 1.0.7 should not be compared to the results of Test Runs 1.0.5 and 1.0.6 when considering data variability because a higher flow rate was used. The paint removal rates for Test Runs 1.0.5 and 1.0.6 were, respectively, 41.2 sq in/min and 39.2 sq in/min, or a difference of only 5.1%.

Test Run 1.1.0 was not used for paint removal rate comparison because only toolboxes were depainted during that test run. Test Runs 1.1.1 through 1.1.4 are valid for investigating data variability, and the paint removal rates for these tests are listed below:

Test Run No.	Paint Removal Rate (sq in/min)
1.1.1	57.7
1.1.2	46.8
1.1.3	49.4
1.1.4	49.6

Although the paint removal rate of Test Run 1.1.1 was almost 20% higher than the other three runs, no significant differences occurred during testing, so it cannot be called an outlier. The average paint removal rate was 50.9 sq in/min with a standard deviation of 4.7 sq in/min. These results were valuable to determine an approximate judgement on test reproducibility. A statistical analysis of the test results' variability is discussed in Section 7, because additional duplicate runs were conducted in Test Series 2, thereby increasing the amount of data available for a statistical evaluation.

6.2.2 Media Consumption Rate

Test Runs 1.0.5 and 1.0.6 using U.S. Technology Type III media showed consumption rates of 6.4 and 4.2 (lb/hr) respectively, a 34% difference between the two runs. Test Runs 1.1.0 through 1.1.4 showed a maximum difference in media consumption rates of 33%; a low rate of 2.47 and a high rate of 3.20 (lb/hr). Although the results vary, they indicate that the U.S. Technology Type III media has a higher consumption rate than Composition Materials Plasti-Grit Hard media. A more complete statistical evaluation is discussed in Section 7.

Recycle Calibration - The calibration of the recycle system affected the media consumption rate because it affected the amount of media collected as waste. If the recycle was set too high, media that should have been directed to waste was recycled, and if set too low,

media that should have been recycled was wasted. To maximize proper calibration, the recycle waste was checked hourly, and if more than 1 pound of good media (<60 mesh) was collected in the waste, the air inflow portholes were adjusted.

To investigate media breakdown and recycle calibration further, sieve analyses were performed on the media during the test run. The recycle system was monitored by determining the particle size distribution of the media. If the recycle system was not separating the media consistently and the distribution was varying significantly, the recycle system was adjusted. Table 6-4 shows the percent of media in the system smaller than 60 mesh during each test run. The average shows between 20 and 40 percent of the media was smaller than 60 mesh.

TABLE 6-4

PERCENT OF MEDIA IN BLAST CABINET SYSTEM SMALLER THAN 60 MESH

Test Run No.	Test Run Time (min) 0	60	120	End[a]	Average[b]
1.0.6	1	15	38	--	26.5
1.0.5	3	45	52	31 (168)	42.7
1.1.2	0	28	34	--	31.0
1.1.0	0	33	27	31 (169)	30.3
1.1.1	0	27	38	35 (157)	33.3
1.1.4	0	14	28	27 (165)	23.0
1.1.3	0	28	32	16 (159)	25.3

(a) End time in minutes parentheses.
(b) Average of results based on media samples taken at 60 minutes, 120 minutes and the end of the test run.

Source: Arthur D. Little, Inc.

7.0 TEST SERIES 2 RESULTS AND ANALYSIS

7.1 Results

Test Series 2 was run from January to March 1988. Twenty-nine test runs were conducted and 104 hours of actual blasting was accomplished. Like Test Series 1, smoke generator fog oil pumps and toolboxes and Models 95 and 96 8V engine parts were depainted during testing. A total of 1,726 parts with a total area of 1,875 sq ft were depainted. Appendix B lists the parts depainted in each test run. Fifteen types and/or sizes of plastic media were tested during Test Series 2. Glass beads and walnut shells were also utilized during this test series to provide comparative data between conventional blast media and plastic media.

Certain test runs were added or deleted from the original Test Program as described in the Test Plan (5). Table 7-1 lists these test runs and the reasons for their addition or deletion. A full test matrix is shown in Table 4-1. The results for Test Series 2 are given in Table 7-2.

The results from three test runs are not included in the analysis of Test Series 2. The media consumption rate from Test Run 2.0.5 is omitted because the recycle system was improperly calibrated and an inaccurately high media consumption value was reported. Test runs 2.6.0 and 2.6.1 were also omitted from Test Series 2 analysis. These tests were run at 30 psi gauge pressure which proved too low for abrasive blasting using glass beads.

The types of media chosen for this test series were not evenly distributed between the three hardnesses and the three mesh sizes. More tests were performed on media in the 20-30 mesh size and 3.5 moh hardness ranges, because several sources (i.e., depot personnel, manufacturers, published literature) indicated that this size and hardness of media was best suited for depainting the type of equipment used in this test program. Table 7-3 shows a size and hardness breakdown of the medias tested.

7.2 Analysis

The two main parameters evaluated in the analysis of Test Series 2 were media consumption rate and paint removal rate. Prior to evaluating these parameters, a statistical analysis of the test data was performed. Finally a qualitative analysis of other factors important to Army Depot operations was conducted.

7.2.1 Statistical Analysis

Prior to ranking different medias in terms of paint removal and media consumption rates, a statistical analysis was conducted to determine the reproducibility of the test results. Initially Test Series 1 was designed to acquire the data necessary for the reproducibility

TABLE 7-1

MODIFICATIONS TO ORIGINAL TEST PLAN

TEST RUNS ADDED TO ORIGINAL TEST PLAN

Test Run No.	Media Type	Reason for Addition
2.0.5	Poly Plus	Additional data needed for comparison
2.0.6	Poly Plus	Additional data needed for comparison
2.1.1	Aerolyte	Increase variety of medias tested
2.3.0	Budd Chemical	Increase variety of medias tested
2.5.1	MPC	Duplicate Test Run 2.5.0
2.6.2	Glass Beads	Additional data needed for comparison to plastic media
2.6.3	Glass Beads	Additional data needed for comparison to plastic media
2.6.4	Glass Beads	Additional data needed for comparison to plastic media
2.6.5	Glass Beads	Additional data needed for comparison to plastic media
2.7.2	Walnut Shells	Additional data needed for comparison to plastic media
2.7.3	Walnut Shells	Additional data needed for comparison to plastic media
2.7.4	Walnut Shells	Additional data needed for comparison to plastic media

TEST RUNS DELETED FROM ORIGINAL TEST PLAN

Media Type	Reason for Deletion
Dupont Type C (12-20 mesh)	No longer manufactured for PMB use
Dupont Type C (20-30 mesh)	No longer manufactured for PMB use

Source: Arthur D. Little, Inc.

TABLE 7-2
TEST SERIES 2: RESULTS

TEST RUN NO.	MEDIA TYPE	MEDIA SIZE (mesh)	MEDIA HARDNESS (mohs)	MEDIA FLOW RATE (lbs/min)	TOTAL TIME OF RUN (min)	SURFACE AREA DEPAINTED (sq in)	MEDIA CONSUMED (lbs)	PAINT REMOVAL RATE (sq in/min)	MEDIA CONSUMPTION RATE (lb/hr)	MEDIA RECYCLE (%)
2.0.0	US TECH POLYEXTRA	12-20	3.0	3.6	225	4761	12.7	21	3.4	98.4
2.0.1	US TECH POLYEXTRA	20-30	3.0	4.9	198	4712	14.8	24	4.5	98.5
2.0.2	US TECH POLYEXTRA	30-40	3.0	4.9	214	5871	12.3	27	3.5	98.8
2.0.3	US TECH POLYPLUS	12-20	3.5	4.0	200	7963	23.9	40	7.2	97.0
2.0.4	US TECH POLYPLUS	20-30	3.5	4.0	204	9895	28.3	49	8.3	96.5
2.0.5	US TECH POLYPLUS	20-30	3.5	4.0	212	9184	49.2	43	13.9	94.2
2.0.6	US TECH POLYPLUS	20-30	3.5	4.7	260	11273	34.3	43	7.9	97.2
2.0.7	US TECH POLYPLUS	30-40	3.5	3.6	193	9954	17.7	52	5.5	97.5
2.0.8	US TECH TYPE III	12-20	4.0	3.6	223	10519	32.5	47	8.7	96.0
2.0.9	US TECH TYPE III	30-40	4.0	4.0	235	10130	22.9	43	5.9	97.6
2.1.0	AEROLYTE	20-30	3.5	4.7	242	8124	33.9	34	8.4	97.0
2.1.1	AEROLYTE	12-16	4.0	4.7	244	9651	30.5	40	7.5	97.3
2.2.0	POTTERS MELAMINE	20-30	(a)	3.6	200	10241	20.0	51	6.0	97.2
2.3.0	BUDD CHEMICAL	12-16	4.0	4.0	170	9269	14.8	55	5.2	97.8
2.4.0	DUPONT TYPE L	20-30	3.5	4.7	211	9465	2.3	45	0.7	99.8
2.4.1	DUPONT TYPE L	30-40	3.5	4.0	209	8238	6.7	39	2.5	99.0
2.5.0	MPC X-OFF	20-30	4.0	4.0	195	8710	18.9	45	5.8	97.6
2.5.1	MPC X-OFF	20-30	4.0	4.0	236	9398	32.4	40	8.2	96.6
2.6.0	GLASS BEADS	40-60	5.5	7.2	258	7765	27.2	30	6.3	98.5
2.6.1	GLASS BEADS	40-60	5.5	5.8	270	6518	23.3	24	5.2	98.5
2.6.2	GLASS BEADS	40-60	5.5	9.4	222	10272	56.6	46	15.3	97.3
2.6.3	GLASS BEADS	40-60	5.5	6.3	187	10454	47.8	56	15.3	95.9
2.6.4	GLASS BEADS	40-60	5.5	8.0	205	7654	56.2	37	16.4	96.6
2.6.5	GLASS BEADS	40-60	5.5	12.4	205	7180	61.5	35	18.0	97.6
2.7.0	WALNUT SHELLS	12-20	2.5-3.0	4.7	205	9614	21.2	47	6.2	97.8
2.7.1	WALNUT SHELLS	12-20	2.5-3.0	8.3	185	11297	21.9	61	7.1	98.6
2.7.2	WALNUT SHELLS	12-20	2.5-3.0	3.3	198	14271	29.7	72	9.0	95.5
2.7.3	WALNUT SHELLS	12-20	2.5-3.0	7.8	238	14960	27.8	63	7.0	98.5
2.7.4	WALNUT SHELLS	12-20	2.5-3.0	5.0	193	12661	26.6	66	8.3	97.2

(a) Media not reported on moh hardness scale
Source: Arthur D. Little, Inc.

TABLE 7-3

HARDNESS/SIZE BREAKDOWN OF MEDIA TESTED

Hardness (Mohs)	Size (U.S. Sieve)	No. of Runs	% of Total Runs
3.0	12-20	1	4.3
3.0	12-30	1	4.3
3.0	30-40	1	4.3
3.5	12-20	1	4.3
3.5	20-30	9	39.1
3.5	30-40	2	8.7
4.0	12-20	3	13.0
4.0	20-30	4	17.4
4.0	30-40	1	4.3
Total		23	100

Source: Arthur D. Little, Inc.

analysis. However, due to the start up issues described in Section 6, not all Test Series 1 runs were applicable to the analysis. Consequently, additional data for the analysis were obtained from the results of Test Series 2. During this test series, certain runs using plastic media were duplicated for test verification. In addition, several repeat runs were conducted with both walnut shells and glass beads. By integrating this information from the valid duplicate runs in both Test Series 1 and 2, a more complete assessment of test result reproducibility was possible.

To begin the reproducibility analysis, the variances (σ) associated with the test results for media consumption and for paint removal were calculated. The results showed that for 95% confidence, a single media consumption result was reproducible within $\pm$ 1.1 lb/hr (2σ) while a single paint removal result was reproducible within $\pm$ 14.8 sq in/min.

These statistical values were then applied to the analysis of media consumption and paint removal. The test results of each set of duplicate test runs were averaged and the 95% confidence limits on each data set's average were calculated. The results of these calculations are shown in Tables 7-4 and 7-5 for media consumption and paint removal, respectively. Using the 95% confidence limits on each set's average to predict upper and lower media consumption and paint removal rats, the different medias were separated into 3 categories: A, B and C. Those media which consistently showed least media consumption or highest paint removal (the best case scenario) were selected for Group A. Concurrently, those media which showed highest media consumption or lowest paint removal (the worst case scenario) were selected for Group C. Finally, those media whose average paint removal or media consumption rates fell in the B grouping achieved paint removal and media consumption rates which were more efficient than the Group C media but not as efficient as the Group A media.

The divisions for the groupings were based on two factors: 1) logical groupings in the test results; and 2) a less than 2.5% probability of an overlap between Groups A and C. For example, under media consumption rates, the lowest scoring media in Group A was U.S. Technology Polyextra 20-30 mesh with a media consumption rate of 4 lb/hr and a 95% confidence limit of 2.2 lb/hr. Therefore, there is a 2.5% probability (2.5% at each end of the range) that this media could have a media consumption rate either greater than 6.2 lb/hr or less than 1.8 lb/hr. The categories were divided so that the average media consumption rates of Group C did not fall within the 95% confidence range of Group A. Likewise for paint removal rates, the lowest scoring media in Group A, U.S. Technology Type III 30-40 mesh, exhibited a paint removal rate of 43 sq in/min and a 95% confidence limit of 14.8 sq in/min. As a result, there is a 2.5% probability that this media could achieve a paint removal rate of 28.2 sq in/min, which is still higher than the average paint removal rate of 27 sq in/min for the highest ranking Group C media, U.S. Technology Polyextra 30-40 mesh. The wide ranges in media consumption and paint removal rates reflect

TABLE 7-4
MEDIA CONSUMPTION RATES

GROUP	TEST RUN NO.	MEDIA TYPE	MEDIA SIZE (mesh)	MEDIA HARDNESS (mohs)	AVG MEDIA CONSUMPTION RATE (lbs/hr)	95% CONFIDENCE LIMIT ($2\sigma/\sqrt{N}$)(a)
	2.4.0	DUPONT TYPE L	20-30	3.5	1	2.2
	2.4.1	DUPONT TYPE L	30-40	3.5	2	2.2
A	1.1.1,1.1.2,1.1.3,1.1.4	COMPOSITION MATERIALS	20-30	3.5	3	1.1
	2.0.0	US TECH POLYEXTRA	12-20	3.0	3	1.2
	2.0.2	US TECH POLYEXTRA	30-40	3.0	3	2.2
	2.0.1	US TECH POLYEXTRA	20-30	3.0	4	2.2
	2.3.0	BUDD CHEMICAL	12-16	4.0	5	2.2
	1.0.5,1.0.6	US TECH TYPE III	20-30	4.0	5	1.6
	2.0.7	US TECH POLYPLUS	30-40	3.5	6	2.2
B	2.0.9	US TECH TYPE III	30-40	4.0	6	2.2
	2.2.0	POTTERS MELAMINE	20-30	- -	6	2.2
	2.5.0,2.5.1	MPC X-OFF	20-30	4.0	7	1.6
	2.0.3	US TECH POLYPLUS	12-20	3.5	7	2.2
	2.7.0,2.7.1,2.7.2,2.7.3,2.7.4	WALNUT SHELLS	12-20	2.5-3.0	8	1.0
	2.1.1	AEROLYTE	12-16	4.0	8	2.2
C	2.0.4,2.0.6	US TECH POLYPLUS	20-30	3.5	8	1.6
	2.1.0	AEROLYTE	20-30	3.5	8	2.2
	2.0.8	US TECH TYPE III	12-20	4.0	9	2.2
	2.6.2,2.6.3,2.6.4,2.6.5	GLASS BEADS	40-60	5.5	16	1.1

(a) = Total variance
N = Number of runs per set

Source: Arthur D. Little, Inc.

Arthur D Little

TABLE 7-5
PAINT REMOVAL RATES

GROUP	TEST RUN NO.	MEDIA TYPE	MEDIA SIZE (mesh)	MEDIA HARDNESS (mohs)	AVG PAINT REMOVAL RATE (sq in/min)	95% CONFIDENCE LIMIT ($2\sigma/\sqrt{N}$)(a)
	2.7.0,2.7.1,2.7.2,2.7.3,2.7.4	WALNUT SHELLS	12-20	3.0	62	6.6
	2.3.0	BUDD CHEMICAL	12-16	4.0	54	14.8
	2.0.7	US TECH POLYPLUS	30-40	3.5	52	14.8
	2.2.0	POTTERS MELAMINE	20-30	- -	51	14.8
A	1.1.1,1.1.2,1.1.3,1.1.4	COMPOSITION MATERIALS	20-30	3.5	51	7.4
	2.0.8	US TECH TYPE III	12-20	4.0	47	14.8
	2.0.4,2.0.6	US TECH POLYPLUS	20-30	3.5	46	10.5
	2.4.0	DUPONT TYPE L	20-30	3.5	45	14.8
	2.6.2,2.6.3,2.6.4,2.6.5	GLASS BEADS	40-60	5.5	44	7.4
	2.0.9	US TECH TYPE III	30-40	4.0	43	14.8
	2.5.0,2.5.1	MPC X-OFF	20-30	4.0	42	10.5
	1.0.5,1.0.6	US TECH TYPE III	20-30	4.0	40	10.5
B	2.1.1	AEROLYTE	12-16	4 0	40	14.8
	2.0.3	US TECH POLYPLUS	12-20	3.5	40	14.8
	2.4.1	DUPONT TYPE L	30-40	3.5	39	14.8
	2.1.0	AEROLYTE	20-30	3.5	34	14.8
	2.0.2	US TECH POLYEXTRA	30-40	3.0	27	14.8
C	2.0.1	US TECH POLYEXTRA	20-30	3.0	24	14.8
	2.0.0	US TECH POLYEXTRA	12-20	3.0	21	14.8

(a) = Total variance
N = Number of runs per set

Source: Arthur D. Little, Inc.

both the variety in media type, hardness, and size, and also the diversity of parts and the conditions of parts depainted in the test program.

7.2.2 Media Consumption Rate

Table 7-6 lists the medias in order of ascending consumption rates (the best performing medias listed first). As tests 1.0.5, 1.0.6, 1.1.1, 1.1.2, 1.1.3 and 1.1.4 were run under the same conditions as those in Test Series 2, the data is comparable and, therefore, these tests are included in this table.

The consumption rate for plastic media ranged from a low of 0.7 lb/hr to a high of 8.7 lb/hr with an average of 4.9 lb/hr. The consumption rate for walnut shells varied from 6.2 lb/hr to 9.0 lb/hr with an average of 7.5 lb/hr, and glass beads varied from 15.3 lb/hr to 18.0 lb/hr with an average of 16.2 lb/hr. Clearly, plastic media showed the lowest consumption rate and glass beads showed the highest consumption rate. The analysis of consumption rate was broken down further to evaluate the media hardness and mesh size.

Hardness

Plastic media with three different hardnesses (3.0, 3.5 and 4.0 mohs) were tested. Walnut shells and glass beads with respective hardnesses of 2.5-3.0 and 5.5 mohs were also tested. Figure 7-1 shows the media consumption rate for plastic media, grouped by hardness. This figure shows that media with a 3.0 moh hardness rating achieved lower consumption rates (avg. = 3.8 lb/hr) than media with a 3.5 moh (avg. = 5.5 lb/hr) or a 4.0 moh (avg. = 5.6 lb/hr) hardness rating. As harder media tended to be more brittle, it was more fragile and therefore, broke down more rapidly. For media that were tested more than once, the values in Figure 7-1 are averages of all test runs using that media even if the tests used media with varying mesh size.

In the case of walnut shells (2.5-3.0 mohs), the requirement of a high operating pressure (45 gauge psi versus 30 gauge psi for plastic media) to achieve equivalent paint removal rates offset the effect of high recycle associated with the softer medias. The average media consumption rate for walnut shells of 7.5 lb/hr was higher than the average consumption rates (3.8, 5.5 and 5.6 lb/hr) of the plastic medias at all the hardnesses tested.

Glass beads, with a hardness rating of 5.5 mohs and the requirement of a high operating pressure (45 psi), had the highest average media consumption rate of 16.2 lb/hr. Two tests were also run at 20 psi, but the paint removal rate was approximately 40% lower than the rate achieved at 45 psi. The media consumption was also decreased and was equal to only 30% of the media consumption achieved at 45 psi blast pressure.

TABLE 7-6
MEDIA CONSUMPTION RATE ANALYSIS

TEST RUN NO.	MEDIA TYPE	MEDIA SIZE (mesh)	MEDIA HARDNESS (mohs)	MEDIA CONSUMED (lbs)	TOTAL TIME OF RUN (min)	MEDIA CONSUMPTION RATE (lb/hr)
2.4.0	DUPONT TYPE L	20-30	3.5	2.3	211	0.7
1.1.2	COMPOSITION MATERIALS	20-30	3.5	6.1	148	2.5
2.4.1	DUPONT TYPE L	30-40	3.5	8.7	209	2.5
1.1.1	COMPOSITION MATERIALS	20-30	3.5	7.7	152	3.0
1.1.4	COMPOSITION MATERIALS	20-30	3.5	8.5	165	3.1
1.1.3	COMPOSITION MATERIALS	20-30	3.5	8.7	159	3.3
2.0.0	US TECH POLYEXTRA	12-20	3.0	12.7	225	3.4
2.0.2	US TECH POLYEXTRA	30-40	3.0	12.3	214	3.4
1.0.6	US TECH TYPE III	20-30	4.0	9.3	134	4.2
2.0.1	US TECH POLYEXTRA	20-30	3.0	14.8	198	4.5
2.3.0	BUDD CHEMICAL	12-16	4.0	14.8	170	5.2
2.0.7	US TECH POLYPLUS	30-40	3.5	17.7	193	5.5
2.5.0	MPC X-OFF	20-30	4.0	18.9	195	5.8
2.0.9	US TECH TYPE III	30-40	4.0	22.9	235	5.8
2.2.0	POTTERS MELAMINE	20-30	- -	20.0	200	6.0
2.7.0	WALNUT SHELLS	12-20	2.5-3.0	21.2	205	6.2
1.0.5	US TECH TYPE III	20-30	4.0	17.8	163	6.4
2.7.3	WALNUT SHELLS	12-20	2.5-3.0	27.8	238	7.0
2.7.1	WALNUT SHELLS	12-20	2.5-3.0	21.9	185	7.1
2.0.3	US TECH POLYPLUS	12-20	3.5	23.9	200	7.2
2.1.1	AEROLYTE	12-16	4.0	30.5	244	7.5
2.0.6	US TECH POLYPLUS	20-30	3.5	34.3	260	7.9
2.5.1	MPC X-OFF	20-30	4.0	32.4	236	8.2
2.7.4	WALNUT SHELLS	12-20	2.5-3.0	26.6	193	8.3
2.0.4	US TECH POLYPLUS	20-30	3.5	28.3	204	8.3
2.1.0	AEROLYTE	20-30	3.5	33.9	242	8.4
2.0.8	US TECH TYPE III	12-20	4.0	32.5	223	8.7
2.7.2	WALNUT SHELLS	12-20	2.5-3.0	29.7	198	9.0
2.6.2	GLASS BEADS	40-60	5.5	56.6	222	15.3
2.6.3	GLASS BEADS	40-60	5.5	47.8	187	15.3
2.6.4	GLASS BEADS	40-60	5.5	56.2	205	16.4
2.6.5	GLASS BEADS	40-60	5.5	61.5	205	18.0

Source: Arthur D. Little, Inc.

Figure 7-1
Consumption Rate vs. Media Hardness

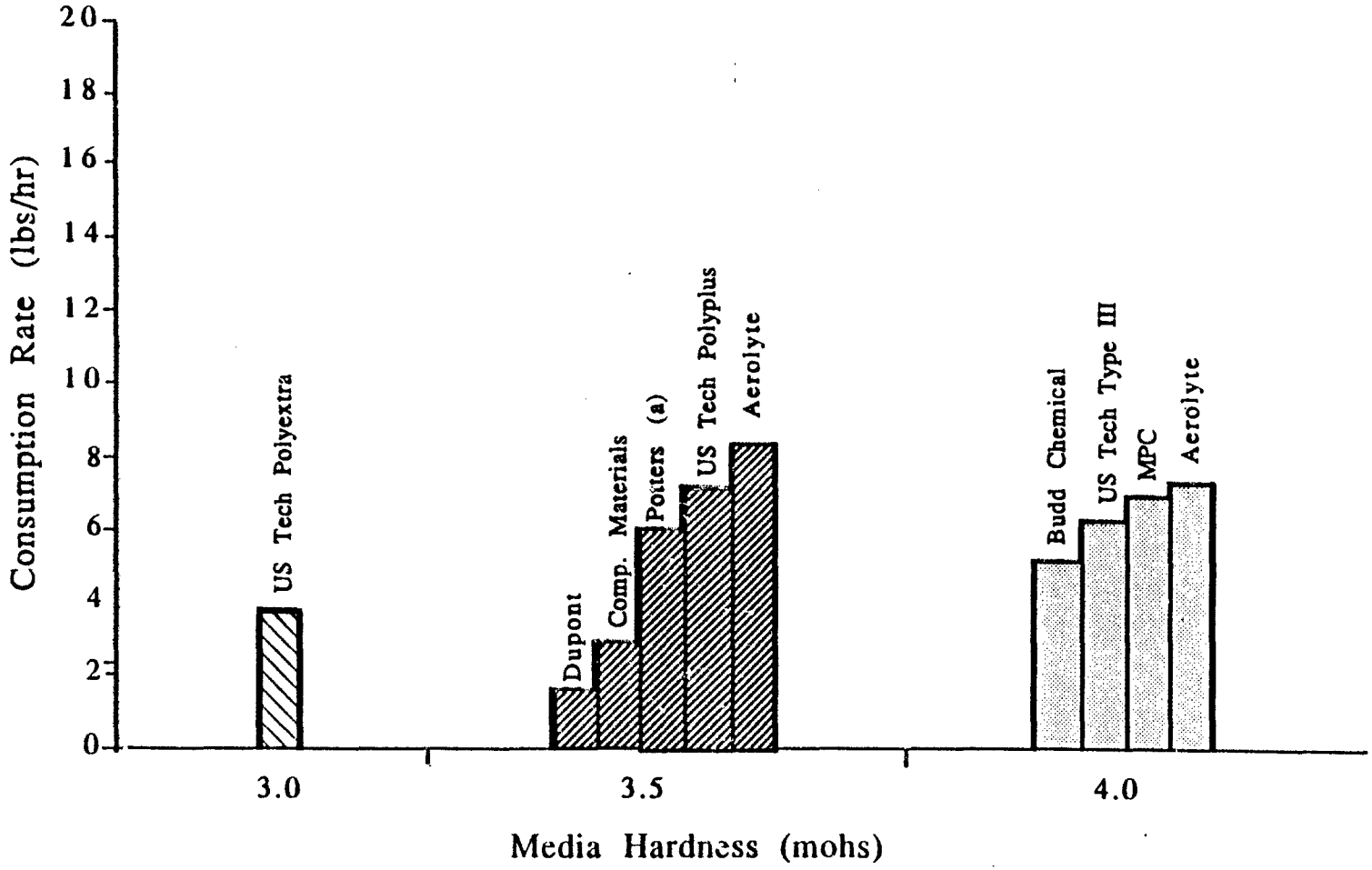

(a) Hardness estimated on the basis of the pitting of thin aluminum

Source: Arthur D. Little, Inc.

Arthur D Little

Two logical conclusions can be drawn from this data: 1) harder, more brittle media breaks down more rapidly than softer media; and 2) higher operating pressures increases consumption rate. Glass beads, which were the hardest media tested and which were also run at the highest pressure, exemplify these conclusions by having the overall highest consumption rate.

Mesh Size

The particle size distribution of the virgin media was monitored during the test program to determine if manufacturers' specifications were actually being met. The particle size distribution of the virgin media ranged from 50 to 93% of the media falling within the specified range with an overall average of 74%. Table 7-7 shows the results.

The Navy specifications (10), now in a draft stage, require approximately 70% to fall within the specified range (with some variation depending on the mesh size). All medias except U.S. Technology met this requirement.

This test program looked at variation between medias of different manufacturers, but did not look at variation between batches of media for a particular manufacturer. There may also be considerable variation between batches of media since the manufacturers may acquire their raw materials, which are frequently waste materials, from several sources. To fully evaluate this question, further tests should be run on media from several batches.

Plastic media of three different mesh sizes, 12-20, 20-30 and 30-40, were tested. 12-20 mesh walnut shells and 60 mesh glass beads were also tested. Figure 7-2 shows the consumption rates for the various medias according to mesh size. It is noted that the hardness varied within the mesh size and this figure only shows trends in terms of size.

The average consumption rate tends to decrease as the media gets smaller. The larger sized 12-20 mesh media had an average consumption rate of 6.4 lb/hr, the medium sized 20-30 mesh media had an average consumption rate of 5.2 lb/hr and the smaller 30-40 mesh media, a consumption rate of 4.3 lb/hr. It appears that during breakdown the larger media does not split in half but rather shatters, or splinters. Sharp edges shear off and this ultimately leads to higher media consumption.

It is not possible to compare the effect of mesh size on the performance of glass beads and walnut shells, because each of these medias was tested at only one mesh size and, both medias were tested at 45 psi, a higher pressure than the standard 30 psi operating pressure.

7.2.3 Paint Removal Rate

Table 7-8 lists the test runs in order of descending paint removal rates (the best performing medias listed first). As noted in Section

TABLE 7-7

PARTICLE SIZE DISTRIBUTION OF VIRGIN MEDIA

Manufacturer	Number of Analyses	Range[a] (%)	Average % Within Range
U.S. Technology	15	50-93	69
Aerolyte	2	76-89	82
Potters	1	-	76
Budd Chemical	1	-	85
Dupont	2	71-79	75
MPC	2	67-75	71
Composition Materials	5	80-85	83

(a) The highest and lowest percentages of media falling within the particle size stated by the manufacturer.

Source: Arthur D. Little, Inc.

Figure 7-2
Consumption Rate vs. Mesh Size

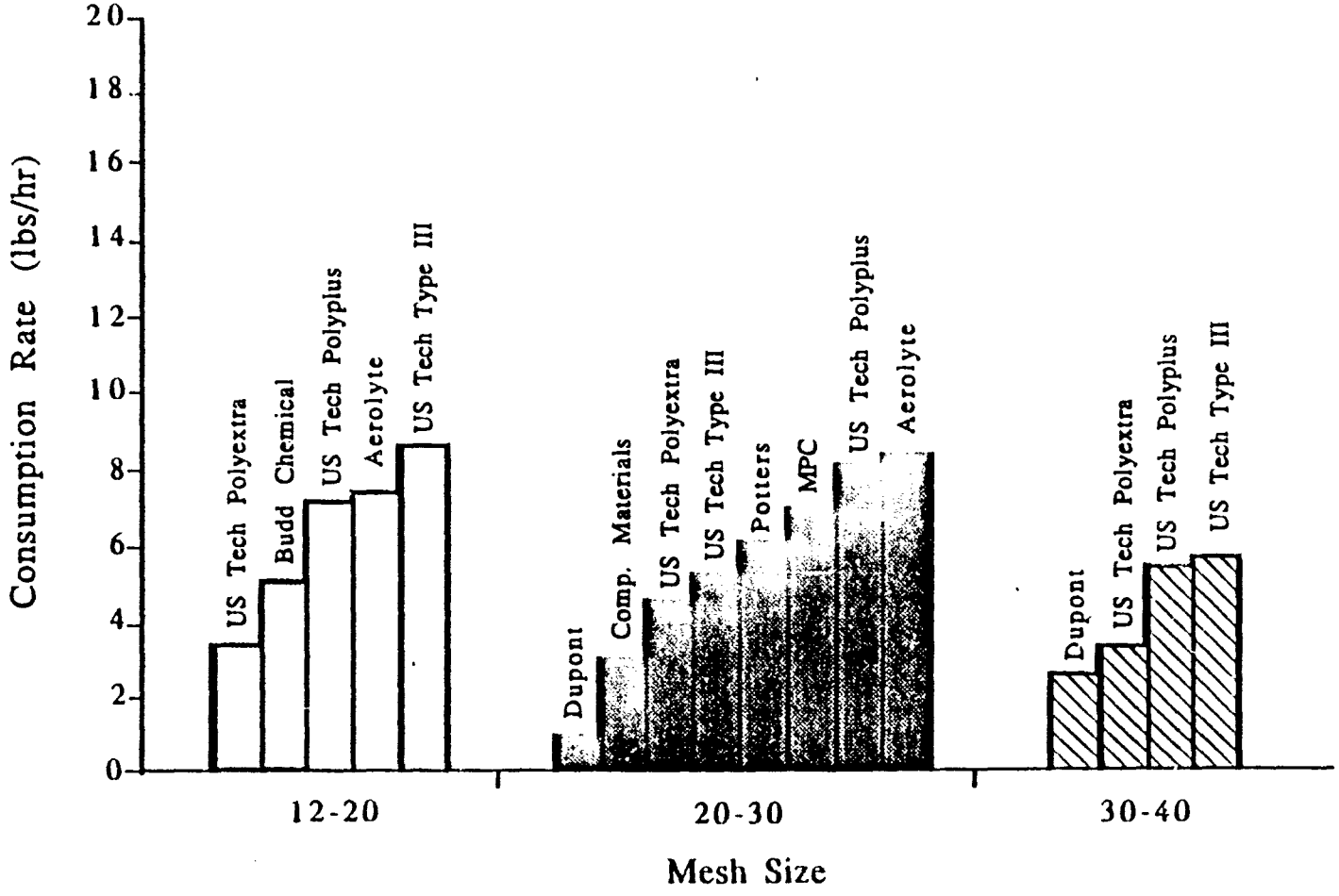

Source: Arthur D. Little, Inc.

Arthur D Little

TABLE 7-8
PAINT REMOVAL RATE ANALYSIS

TEST RUN NO.	MEDIA TYPE	MEDIA SIZE (mesh)	MEDIA HARDNESS (mohs)	SURFACE AREA DEPAINTED (sq in)	TOTAL TIME OF RUN (min)	PAINT REMOVAL RATE (sq in/min)
2.7.2	WALNUT SHELLS	12-20	2.5 - 3.0	14271	198	72
2.7.4	WALNUT SHELLS	12-20	2.5 - 3.0	12661	193	66
2.7.3	WALNUT SHELLS	12-20	2.5 - 3.0	14960	238	63
2.7.1	WALNUT SHELLS	12-20	2.5 - 3.0	11297	185	61
1.1.1	COMPOSITION MATERIALS	20-30	3.5	8765	152	58
2.6.3	GLASS BEADS	40-60	5.5	10454	187	56
2.3.0	BUDD CHEMICAL	12-16	4.0	9269	170	55
2.0.7	US TECH POLYPLUS	30-40	3.5	9954	193	52
2.2.0	POTTERS MELAMINE	20-30	(a)	10241	200	51
1.1.4	COMPOSITION MATERIALS	20-30	3.5	8185	165	50
1.1.3	COMPOSITION MATERIALS	20-30	3.5	7861	159	49
2.0.4	US TECH POLYPLUS	20-30	3.5	9895	204	49
2.0.8	US TECH TYPE III	12-20	4.0	10519	223	47
2.7.0	WALNUT SHELLS	12-20	3.0	9614	205	47
1.1.2	COMPOSITION MATERIALS	20-30	3.5	6924	148	47
2.6.2	GLASS BEADS	40-60	5.5	10272	222	46
2.4.0	DUPONT TYPE L	20-30	3.5	9465	211	45
2.5.0	MPC X-OFF	20-30	4.0	8710	195	45
2.0.6	US TECH POLYPLUS	20-30	3.5	11273	260	43
2.0.9	US TECH TYPE III	30-40	4.0	10130	235	43
1.0.5	US TECH TYPE III	20-30	4.0	6923	168	41
2.1.1	AEROLYTE	12-16	4.0	9763	244	40
2.5.1	MPC X-OFF	20-30	4.0	9398	236	40
2.0.3	US TECH POLYPLUS	12-20	3.5	7963	200	40
2.4.1	DUPONT TYPE L	30-40	3.5	8238	209	39
1.0.6	US TECH TYPE III	20-30	4.0	5252	134	39
2.6.4	GLASS BEADS	40-60	5.5	7654	205	37
2.6.5	GLASS BEADS	40-60	5.5	7180	205	35
2.1.0	AEROLYTE	20-30	3.5	8124	242	34
2.0.2	US TECH POLYEXTRA	30-40	3.0	5871	214	27
2.0.1	US TECH POLYEXTRA	20-30	3.0	4712	198	24
2.0.0	US TECH POLYEXTRA	12-20	3.0	4761	225	21

(a) Media not reported on moh hardness scale.
Source: Arthur D. Little, Inc.

Arthur D Little

7.2.2, certain runs were conducted under the same conditions as Test Series 2 and these Test Series 1 runs were included in Table 7-8. For plastic media, paint removal rates varied from 58 to 21 sq in/min. Paint removal with walnut shells varied from 72 to 47 sq in/min for an average of 62 sq in/min. Paint removal with glass beads varied from 56 to 35 sq in/min for an average of 44 sq in/min. The paint removal rate was best with walnut shells. Glass beads and plastic media had similar but slightly lower removal rates.

Paint removal rates were further analyzed with respect to media hardness, mesh size, and media type.

Hardness

Plastic media was tested at 3 hardnesses 3.0, 3.5 and 4.0 mohs, and the average paint removal rate at each hardness was 24, 46 and 44 sq in/min, respectively. Figure 7-3 shows the paint removal rate for each media grouped by hardness. For media types that were tested at more than one mesh size, the test results were averaged. The paint removal rate obtained using media with a 3.0 mohs hardness (U.S. Technology Polyextra) was approximately 50% of the rate obtained using harder media. Paint removal rates were similar for media with hardnesses of 3.5 and 4.0 mohs.

Walnut shells, which are as soft as or softer than U.S. Technology Polyextra achieved the best paint removal of all the medias tested, due mainly to the higher blast pressure of the coarser media. Although, U.S. Technology Polyextra produced very poor paint removal, it is reasonable to assume that better paint removal results would have been obtained if a higher blast pressure such as the 45 psi blast pressure used for walnut shells had been used.

Mesh Size

Plastic media was tested at three mesh sizes, 12-20, 20-30 and 30-40 with the average paint removal rates being 41, 41 and 38 sq in/min, respectively. Based on the statistical analysis in Section 7.2.1, this difference is not significant. Figure 7-4 shows the paint removal rate for each media grouped by mesh size. The three groups of columns are similar, each having one low rate when using U.S. Technology Polyextra. The average for the 30-40 mesh size is approximately 10% lower than the other mesh sizes because fewer test runs were conducted in that size range.

Consequently, the low paint removal rate achieved for U.S. Technology Polyextra lowered the 30-40 mesh size average more than it lowered the average at the other mesh sizes which had more test runs.

Several plastic manufacturers indicated that their tests showed that the best performance was obtained when media of several mesh sizes were used. This was done by loading the blast system with 20-30 mesh media,

Figure 7-3
Paint Removal Rate vs. Media Hardness

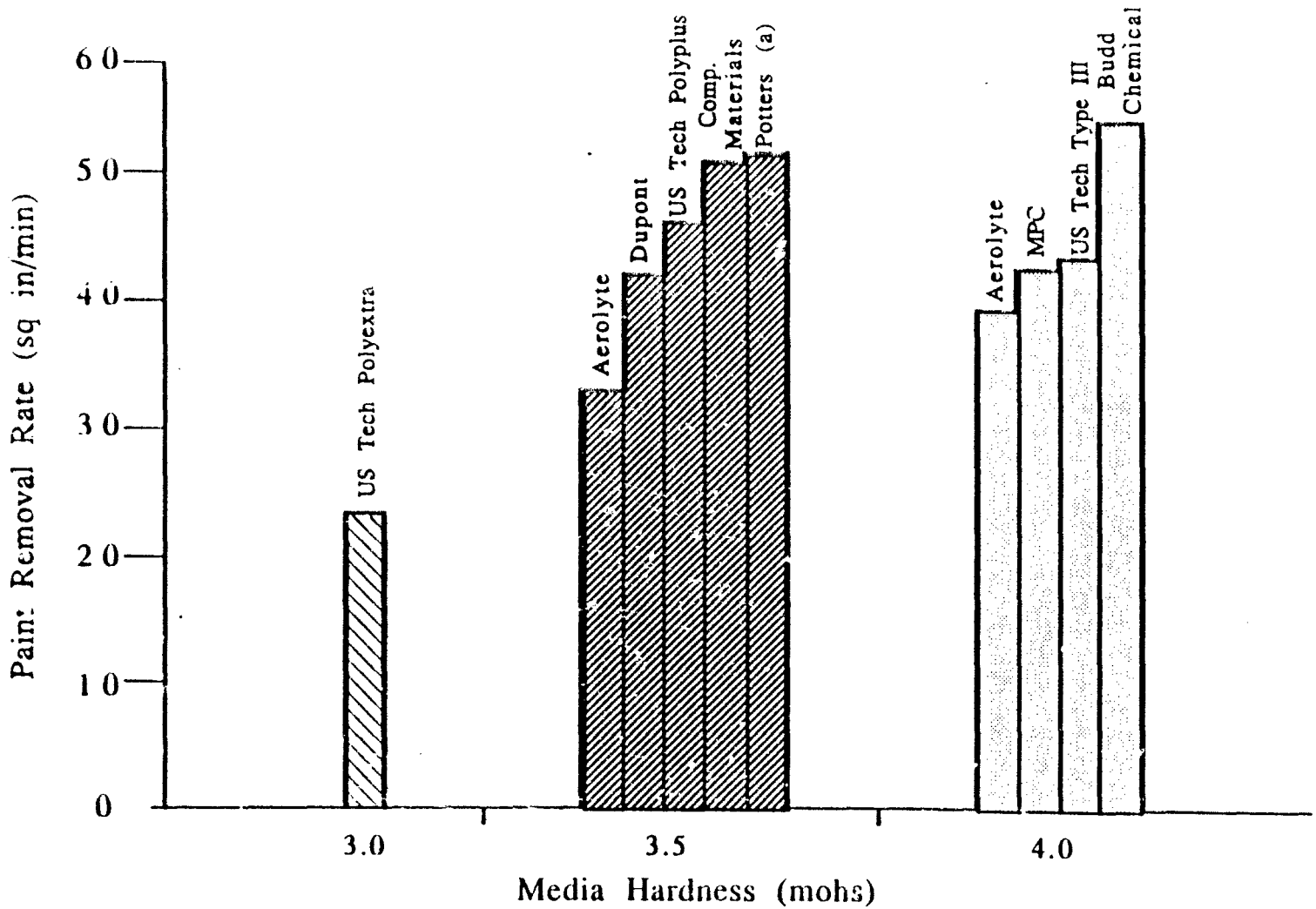

(a) Hardness estimated on the basis of the pitting of thin aluminum

Source: Arthur D. Little, Inc.

Figure 7-4
Paint Removal Rate vs. Mesh Size

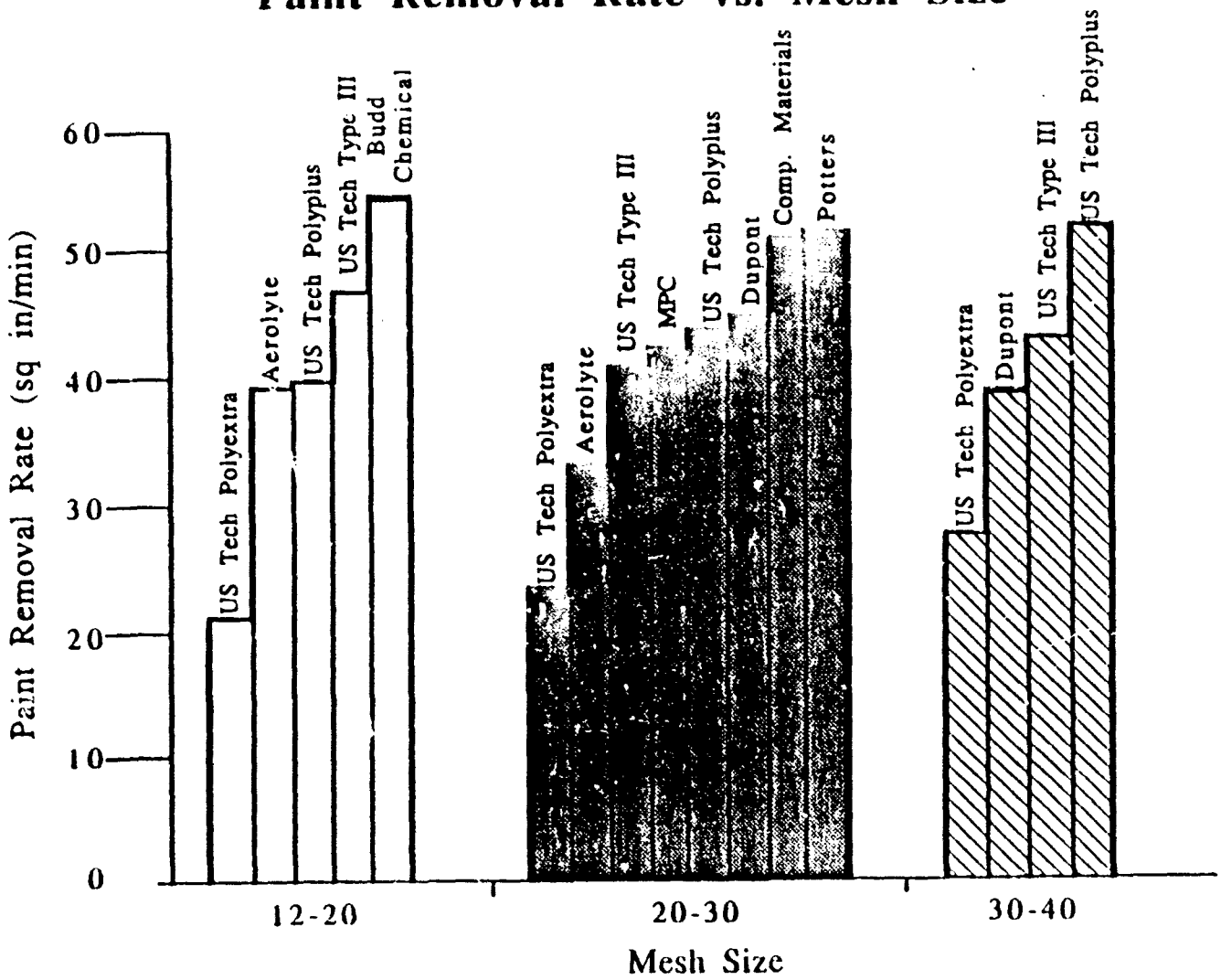

Source: Arthur D. Little, Inc.

and then refilling with 12-20 mesh media as needed. Some of the 20-30 mesh media broke down to 30-40 mesh and, along with a continuous reloading with 12-20 mesh media, the system always had media ranging from 12-40 mesh. The manufacturers noted that the larger media cut through the paint coat while the smaller particles polished the surface. However, our tests not run under laboratory conditions but under actual production conditions, indicated that within the mesh sizes tested, although a trend in media consumption rates was observed for different mesh sizes, mesh size did not significantly affect paint removal rate.

7.2.4 Other Factors Affecting Depainting Operations

In addition to paint removal rate and media consumption, there are several other factors that need to be considered in evaluating plastic media blasting. These qualitative factors were identified by interviews with LEAD shop supervisors, blast operators, quality control inspectors, shop personnel, production engineers and by the observations of the on-site engineers from Arthur D. Little, Inc. These factors are listed and described below.

- Part Appearance - The part surface after depainting, and in particular the shine of the part and the amount of chromate conversion coating remaining on the part surface, varied noticeably depending on the blast media used. According to the quality control inspectors, these differences are mainly aesthetic considerations and depending on the degree of quality control, have varying degrees of importance.

- Rust Removal - All ferrous parts have some amount of corrosion varying from surface discoloration to deep pitted rust. Different media removed this rust to various degrees. This subject is discussed in more detail in Section 2.

- Gasket Removal - As discussed in Section 4.3, several of the parts tested had gasket material attached to the part that had to be removed along with the paint. The abrasive blast media removed the gasket with varying efficiencies.

- Warping - The smoke generator toolboxes were constructed of thin unsupported aluminum that was susceptible to warping during blasting. The amount of warping varied primarily according to blast pressure and dwell time (the length of time spent blasting one specific area).

- Surface Profile - The soft aluminum of the toolboxes was also susceptible to surface pitting by the blast media which in turn reduced the useful life of the part. The pitting increased with the hardness and size of the blast media.

- Operator Ease - At the higher (45 psi) blast pressure, the blast operator found it more difficult to control the nozzle, and therefore tired more quickly.

FIGURE 7-5
MEDIA EVALUATION MATRIX

Criteria

		Part Appearance	Rust Removal	Gasket Removal	Warping	Surface Profile	Operator Ease	Dust Generation	Equipment Wear	Residue Problems	Surface Roughening	Blowoff Difficulties		Total Points
Importance Factor		3	3	3	2	2	2	2	1	1	1	1		63
Plastic Blasting Media														
U.S. Tech Polyestra (12-20)	3.0	1	2	2	2	3	3	3	3	2	2	2		46
U.S. Tech Polyestra (20-30)	3.0	1	2	2	2	3	3	3	3	2	2	2		46
U.S. Tech Polyestra (30-40)	3.0	1	2	2	2	3	3	3	3	2	1	2		45
U.S. Tech Polypins (12-20)	3.5	2	2	3	3	2	3	3	3	2	3	3		54
U.S. Tech Polypins (20-30)	3.5	2	2	3	3	2	3	3	3	2	3	3		54
U.S. Tech Polypins (30-40)	3.5	2	2	3	3	3	3	3	3	2	2	3		55
U.S. Tech Type III (12-20)	4.0	2	2	3	3	1	3	3	3	2	3	3		52
U.S. Tech Type III (20-30)	4.0	2	2	3	3	1	3	3	3	2	3	3		52
U.S. Tech Type III (30-40)	4.0	2	2	3	3	2	3	3	3	2	3	3		54
Composition Materials (20-30)	3.5	2	2	3	3	2	3	2	3	2	3	2		51
Aerolyte (20-30)	3.5	2	2	3	3	2	3	3	3	2	3	2		53
Aerolyte (12-16)	4.0	2	2	3	3	1	3	2	3	2	3	2		49
Potter's Melamine (20-30)	3.5	2	2	3	3	2	3	2	3	2	3	3		52
Budd Chemical (12-16)	4.0	2	2	3	3	1	3	3	3	2	3	3		52
Dupont Type L (20-30)	3.5	2	2	2	3	2	3	1	3	2	2	1		44
Dupont Type L (30-40)	3.5	2	2	2	3	3	3	1	3	2	2	1		46
MPC Type M (20-30)	4.0	2	2	3	3	1	3	3	3	2	3	3		52
Other Depainting Methods														
Glass Beads (40-60)	5.5	3	3	2	1	2	1	2	1	3	3	3		46
Walnut Shell's (12-20)	2.5-3.0	1	2	2	1	3	1	2	3	3	1	1		37
Chemical Stripping		2	1	1	3	3	3	NA	1	3	1	NA		NA

ASSESSMENT RATING: 3 → Best Performance 2 → Medium Performance 1 → Worst Performance

TOTAL POINTS: Multiply the importance factor by the assessment rating for the evaluation factor; then sum the products across the row to obtain total points.

Source: Arthur D. Little, Inc.

- Dust Generation - Different media produced varying amounts of dust during blasting, which in turn, affected the blast operator's visibility and efficiency.

- Equipment Wear - As can be seen in Figure 4-1, there are several rubber hoses throughout the blast cabinet system. Media passing through these hoses eventually wears a hole in the hose, particularly where there is a bend in the hose. Harder media wore down the hose at a faster rate than the softer media.

- Residue Problems - Any plastic blast residue left on the depainted parts will burn during subsequent welding. This decomposition causes an odor problem. Also an oily residue has been reported (5) when using walnut shells. Based on a visual inspection of the parts by the on-site engineers, this was not a significant problem.

- Surface Roughness - In order to achieve proper paint adhesion the part surface needs to be slightly roughened, creating an anchor pattern. Certain abrasive blast media such as glass beads and the harder plastic media accomplish this better than the softer plastic media and walnut shells.

- Blowoff Difficulties - Plastic media residue sticks to the depainted parts to varying degrees making it more or less time consuming to blowoff the part. This adhesion can also cause dust buildup on the walls of the blast cabinet. Several companies now offer plastic media treated with an antistatic solution to correct the problem. Also the blast media can build up in holes and crevices in the part and must be removed by hand. This problem was particularly noted with walnut shells.

In an effort to quantify the effects of these factors, a media evaluation matrix, Figure 7-5, was constructed to evaluate the medias tested. Chemical stripping is also evaluated in the matrix. The evaluation is subjective, based on the observations of the on-site engineers and LEAD operating personnel. The results of the matrix show that all plastic medias with a hardness of 3.5 or 4.0 mohs had about the same rating (similar total points). Glass beads and 3.0 moh hardness plastic media scored slightly lower and walnut shells and chemical stripping scored significantly lower.

Although the ranking based on these factors is a consideration, it is less important than paint removal rate and media consumption rate for three reasons:

(1) It was a subjective evaluation based on the experiences of the on-site engineers.

(2) Although these factors do affect depainting operations, an economic evaluation based on these factors would be abstract at best.

(3) Despite many of the performance differences of the blast medias, plastic, glass and walnut shells all passed the necessary safety, health, environmental and quality control requirements of the U.S. Army Depot System.

7.3 Conclusions

The following conclusions were drawn from the test program:

- For thick aluminum and steel parts, substrate damage is insignificant and not a factor in choosing a plastic blast media.
- Test results did not conclusively show certain brands of media to perform better than other media. However, the results did show trends based on media hardness and particle size.
- At gauge 30 psi, plastic media with 3.0 moh hardness had a significantly lower paint removal rate than medias with a 3.5 and 4.0 moh hardness.
- For the particle sizes of the plastic media tested, there was no significant difference in paint removal rate.
- Plastic media with 3.0 moh hardness had a lower media consumption rate than plastic media with a 3.5 or 4.0 moh hardness.
- Plastic media consumption rates were highest using 12-20 mesh size media and lowest using 30-40 mesh size media.
- Overall, for the parts tested in the test program, plastic media with a 3.5 or 4.0 mohs hardness and a 20-40 mesh size performed best.
- Paint removal rates were better with walnut shells than plastic media and glass beads at the operating pressures used in the test program.
- Plastic media had the lowest media consumption rate followed by walnut shells and the glass beads at the operation conditions used.
- The qualitative analysis of depainting showed that plastic media and glass beads were preferred by the shop personnel over walnut shells and chemical stripping.

8.0 TEST SERIES 3 RESULTS AND ANALYSIS

8.1 Results

Test Series 3, conducted during March 1988, consisted of 13 test runs aimed at determining the effect of different blast parameters on PMB paint removal and media consumption. A total of 48.8 hours of blasting was accomplished As in Test Series 1 and 2, smoke generator fog oil pumps and toolboxes, and Model 95 and 96 8V engine parts were chosen for testing. A total of 857 parts with a total area of 1034.5 sq ft were depainted. Appendix B lists the parts depainted in each run. U.S. Technology Polyplus and Composition Materials Plasti-Grit Hard, the two plastic media identified during Test Series 2 for further testing, were used during this test series. Each of these medias was sized at 20-30 mesh and in the 3.5 mohs hardness range. Finally, a number of CARC fog oil pump smoke generator sets were blasted with Composition Materials Plasti-Grit Hard and with walnut shells. The walnut shells were sized at 12-20 mesh and had a hardness rating of 2.5-3.0 mohs. Table 8-1 lists the test results for Test Series 3, not including the results from the CARC painted parts, which are discussed in Section 8.3.

As in Test Series 2, certain test runs were repeated or deleted from the original test program described in the test plan (5). Table 8-2 lists these test runs.

8.2 Analysis of Parametric Changes

The three blast parameters varied during Test Series 3 were blast pressure, blast stand off distance and media flow rate. The effects of these parametric changes on paint removal and media consumption are shown in Figures 8-1 and 8-2, respectively. Figures 8-1 and 8-2 also compare the results achieved during Test Series 3 with the media consumption and paint removal rates achieved with the two plastic media at standard operating conditions.

8.2.1 Blast Pressure

Blast pressure was increased from the standard operating pressure of 30 psi to 45 psi. Test runs 3.0.4 and 3.1.4 show the results for U.S. Technology Polyplus and Composition Materials. In the case of U.S. Technology Polyplus, paint removal increased from 46 sq in/min (the average paint removal rate calculated from Test Runs 2.0.4, and 2.0.6) to 58 sq in/min. This was higher than the 95% confidence range of paint removal for U.S. Technology Polyplus of 35.5 to 56.5 sq in/min discussed in section 7.2.1. The Composition Materials high pressure test run showed an even greater increase in paint removal from 51 sq in/min (the average paint removal rate calculated from Test Runs 1.1.1, 1.1.2, 1.1.3, and 1.1.4) to 67 sq in/min. At standard operating conditions, the 95% confidence range of paint removal rates is 43.5 to 58.3 sq in/min.

TABLE 8-1
TEST SERIES 3: RESULTS

TEST RUN NO.	MEDIA TYPE	BLAST PRESSURE (psi)	BLAST STAND-OFF DISTANCE (in)	MEDIA FLOW RATE (lbs/min)	TOTAL TIME OF RUN (min)	SURFACE AREA DEPAINTED (sq in)	MEDIA CONSUMED (lbs)	PAINT REMOVAL RATE (sq in/min)	MEDIA CONSUMPTION RATE (lbs/hr)	MEDIA RECYCLE (%)
3.0.0	US TECH POLYPLUS (a)	30	10	8.0	257	13356	30.1	52	7.0	98.5
3.0.1	US TECH POLYPLUS	30	10	5.8	262	11474	29.4	44	6.7	98.1
3.0.2	US TECH POLYPLUS	30	4	3.9	257	11518	24.1	45	5.6	97.6
3.0.3	US TECH POLYPLUS	30	16	4.2	220	10463	16.4	48	4.5	98.2
3.0.4	US TECH POLYPLUS	30	10	5.3	242	14115	37.2	58	9.2	97.1
3.0.5	US TECH POLYPLUS	45	10	5.3	250	13709	21.7	55	5.2	98.4
3.1.0	COMP MATLERIALS (a)	30	10	8.0	237	12854	17.8	54	4.5	99.1
3.1.1	COMP MATLERIALS	30	10	5.8	240	10303	15.8	43	4.0	98.9
3.1.2	COMP MATLERIALS	30	4	2.7	222	2205	20.6	55	5.6	96.6
3.1.3	COMP MATLERIALS	30	16	2.7	241	11110	20.5	46	5.1	96.8
3.1.4	COMP MATLERIALS	45	10	3.7	252	16792	33.5	67	8.0	96.4
3.1.5	COMP MATLERIALS	30	10	4.2	124	5243	11.3	42	5.5	97.8
3.2.0	WALNUT SHELLS (b)	30	10	6.8	121	5820	12.5	48	6.2	98.5

(a) Media characteristics: 3.5 moh hardness, 20-30 mesh size
(b) Media characteristics: 2.5-3.0 moh hardness, 12-20 mesh size

Source: Arthur D. Little, Inc.

TABLE 8-2

MODIFICATIONS TO ORIGINAL TEST PLAN

TEST RUNS ADDED TO ORIGINAL TEST PLAN

Test Run No.	Test	Reason for Addition
3.0.1	High flow rate Test Run	Additional data needed for comparison
3.0.5	High flow rate Test Run	Additional data needed for comparison
3.1.1	High flow rate Test Run	Additional data needed for comparison
3.2.0	Test run with walnut shells and CARC painted equipment parts	To compare walnut shell CARC paint removal rates with plastic media CARC paint removal rates

TEST RUNS DELETED FROM ORIGINAL TEST PLAN

Test	Reason for Deletion
Duplicate Test Runs with plastic media and CARC painted equipment parts	Limited number of CARC painted equipment parts

Source: Arthur D. Little, Inc.

Figure 8-1
Test Series 3 - Parameter Optimization Tests
Paint Removal

Standard Operating Parameters (SOP):
- 30 psi Blast Pressure
- 10 inch Blast Stand-Off Distance
- 3.5 - 4.7 (lbs/min) Media Flow Rate

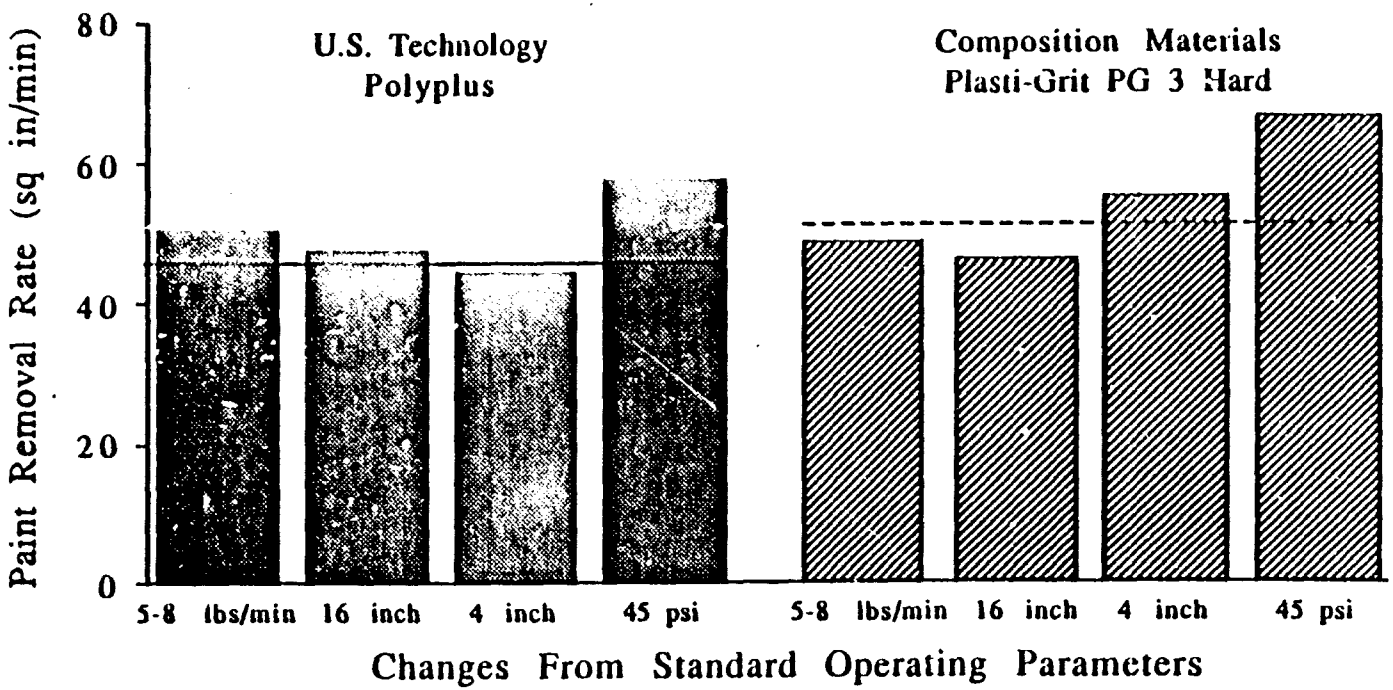

— US Technology Polyplus Paint Removal Rate with SOP (46.0 sq in/min)

--- Composition Materials Paint Removal Rate with SOP (50.9 sq in/min)

US Technology Polyplus Paint Removal Rates with changing parameters

Composition Materials Paint Removal Rates with changing parameters

Source: Arthur D. Little, Inc.

Arthur D Little

Figure 8-2
Test Series 3 - Parameter Optimization Tests
Media Consumption

Standard Operating Parameters (SOP):
- 30 psi Blast Pressure
- 10 inch Blast Stand-Off Distance
- 3.5 - 4.7 (lbs/min) Media Flow Rate

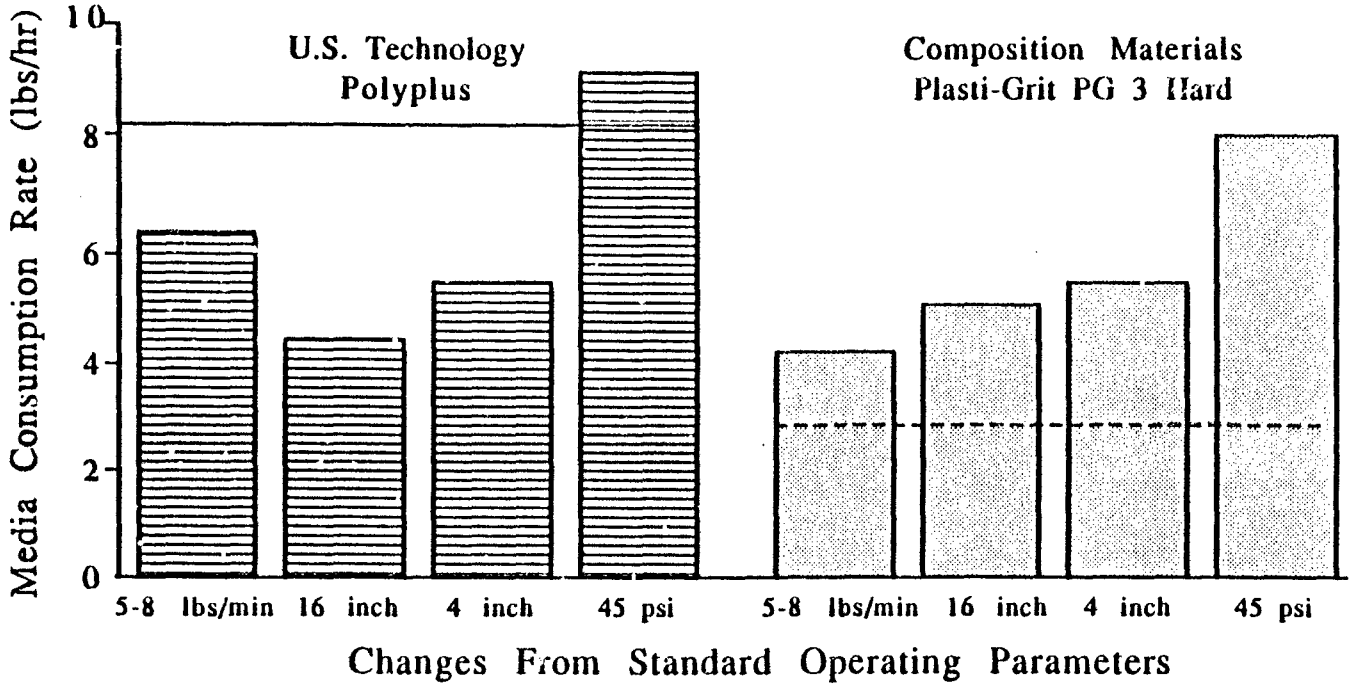

— US Technology Polyplus Media Consumption Rate with SOP (8.1 lbs/hr)

--- Composition Materials Media Consumption Rate with SOP (3.0 lbs/hr)

US Technology Polyplus Media Consumption Rates with changing parameters

Composition Materials Media Consumption Rates with changing parameters

Source: Arthur D. Little, Inc.

Arthur D Little

Increasing blast pressure also increased the rate of media consumption. The U.S. Technology Polyplus consumption rate increased from 8.1 lb/hr (the average media consumption rate calculated from Test Runs 2.0.4 and 2.0.6) to 9.2 lb/hr. This value fell in the 95% confidence range of 6.5 to 9.7 lb/hr for U.S. Technology Polyplus. The media consumption rate for Composition Materials increased dramatically from 3.0 lb/hr (the average media consumption rate calculated from Test Runs 1.1.1, 1.1.2, 1.1.3, and 1.1.4) to 8.0 lb/hr and was much higher than the 95% confidence range of media consumption for Composition Materials of 1.9 to 4.1 lb/hr at standard operating conditions.

In addition to increasing the rates of paint removal and media consumption, blasting at 45 psi produced greater substrate pitting and warping, particularly on the aluminum equipment parts. The high blast pressure also made it more difficult for the blast operator to control the blast nozzle and to handle the small equipment parts.

8.2.2 Blast Stand Off Distance

Blast stand off distance was decreased from 10 inches to 4 inches and then increased to 16 inches. The change in blast stand off distance had little effect on paint removal for both of the plastic medias tested. As mentioned in Section 8.2.1, the average U.S. Technology Polyplus paint removal rate calculated from Test Runs 2.0.4 and 2.0.6 equalled 46 sq in/min. Decreasing blast stand off distance to 4 inches (Test Run 3.0.2) produced a paint removal rate of 45 sq in/min while increasing blast stand off distance to 16 inches (Test Run 3.0.3) produced a paint removal rate of 48 sq in/min. Both these values fell well within the expected range of paint removal rates for U.S. Technology Polyplus achieved at standard operating conditions (35.5 to 56.5 sq in/min). Similar results were observed for Composition Materials. Decreasing blast stand off distance to 4 inches produced a paint removal rate of 55.0 sq in/min (Test Run 3.1.2) while increasing blast stand off distance to 16 inches produced a paint removal rate of 46.1 sq. in/min (Test Run 3.1.3). The results of both runs with Composition Materials fell well within the expected range of paint removal rates achieved at standard operating conditions (43.5 to 58.3 sq in/min).

The U.S. Technology Polyplus media consumption of 5.6 lb/hr at a 4 inch blast stand off distance, and 4.5 lb/hr at a 16 inch blast stand off distance, decreased in comparison to the 95% confidence range of 6.5 to 9.7 lb/hr at a 10 inch stand off distance. The media consumption of Composition Materials increased. At a 4 inch blast stand off distance, media consumption increased to 5.6 lb/hr while at a 16 inch blast stand off distance, media consumption increased to 5.1 lb/hr. Again, the 95% confidence range of media consumption for Composition Materials was 1.9 to 4.1 lb/hr at standard operating conditions.

The reason for this apparent contradiction in effect on media consumption may be due to the physical limitations of the blast cabinet system. As the Test Runs proceeded, it became apparent that it was

FIGURE 8-3

BLAST PARAMETER EVALUATION MATRIX

Criteria

	Part Appearance	Rust Removal	Gasket Removal	Warping	Surface Profile	Operator Ease	Dust Generation	Equipment Wear	Surface Roughening		Total Points
Importance Factor	3	3	3	2	2	2	2	1	1		57
ndard Operating Parameters											
30 psi, 10 inch Blast Standoff Distance, 3.7-4.5 lbs/min Media Flow Rate	2	2	2	2	2	3	3	2	2		42
dified Parameters											
5-8 lbs/min Media Flow Rate	2	2	2	2	2	1	1	2	2		34
16 inch Blast Standoff Distance	1	1	1	3	3	1	3	2	1		32
4 inch Blast Standoff Distance	2	2	3	1	2	3	1	2	2		39
45 psi Blast Pressure	3	2	3	1	1	1	1	1	3		36

ASSESSMENT RATING: 3 → Best Performance 2 → Medium Performance 1 → Worst Performance

TOTAL POINTS: Multiply the importance factor by the assessment rating for the evaluation factor; then sum the products across the row to obtain total points.

Source: Arthur D. Little, Inc.

difficult to achieve a consistent 4 inch or 16 inch blast stand off distance. The hose in the blast cabinet is relatively inflexible and difficult to maintain at either 4 inch or 16 inch distances from a given part. When handling a part, turning it over and inspecting the part for remaining paint, and when blasting the corners and edges of complicated parts, it was difficult for the operator to maintain a blast stand off distance greater than approximately one foot.

Finally, although it was not possible to make exact correlations between blast stand off distances and paint removal or media consumption rates, it was observed, as one would expect, that the 4 inch blast stand off distance produced higher media consumption than the 16 inch stand off distance for the two plastic media tested.

8.2.3 Media Flow Rate

To determine the effect of media flow on paint removal and media consumption, media flow was increased from the 3.5 to 4.7 lb/min range to 5.0 to 8.0 lb/min. Like the change in blast stand off distance, this change produced little effect on the rate of paint removal for both U.S. Technology Polyplus and Composition Materials media.

The U.S. Technology Polyplus paint removal rate of 50.2 sq in/min fell within the predicted range of 35.5 to 56.5 sq in/min at standard operating conditions. The paint removal rate of 48.6 sq in/min for Composition Materials also fell within its predicted paint removal of 43.5 to 58.3 sq in/min at standard operating conditions.

Changing media flow rate did produce changes in media consumption rates. The media consumption rate for U.S. Technology Polyplus equalled 6.3 lb/hr and was lower than the predicted range of 6.5 to 9.7 lb/hr at standard operating conditions. The media consumption for Composition Materials Hard equalled 4.2 lb/hr and was higher than the predicted range of 1.9 to 4.1 lb/hr at standard operating conditions.

The discrepancy in effect on media consumption is due to the limited ability to vary flow rate based on the design of the blast cabinet system. Initially, the media flow valve was adjusted and flow rate measurements were taken at the beginning of each run. However, as the test runs proceeded, it was often necessary to change the media flow valve setting to accommodate changing flow characteristics. For example, a too large media flow opening caused surging, an overload of media for a given air flow. These media flow valve adjustments made it difficult to maintain a constant flow rate and to determine a consistent correlation between media flow and media consumption. For the blast cabinet used in this test program, optimal media flow was reached by adjusting media flow in accordance with efficient system operation.

8.2.4 Qualitative Assessment of Changes in Blast Parameters

An overall qualitative assessment of the effects of the changes in blast parameters was conducted. The results are summarized in Figure 8-3. Based on the evaluation categories of part appearance,

rust removal, gasket removal, warping, surface profile (pitting), operator ease, dust generation, equipment wear, and surface roughening described in Section 6.2.4, the effects produced from the different changes in standard operating parameters were evaluated.

On the positive side, blasting at high pressure shined the surface of a part better, improved the removal of the chromate conversion undercoatings, increased the rate of gasket removal, and created a better anchor pattern. On the negative side, blasting at high pressure led to increased warping and surface pitting, greater dust generation and equipment wear, and was tiring and more difficult for the blast operator to handle the parts.

The test run conducted at a 4 inch blast stand off distance improved gasket removal and was easier for the operator. Like the high blast pressures test runs, however, the close blast stand off distance increased substrate warping and dust generation.

The 16 inch blast stand off distance decreased warping, surface pitting and dust generation. On the negative side, the 16 inch blast stand off distance did not shine surfaces well, did not remove the chromate conversion undercoatings and surface rust, did not lead to adequate gasket removal, was a difficult distance for the blast operator to maintain in the blast cabinet and did not create a good anchor pattern.

The high media flow rate did not alter the rating from the standard operating parameters for most categories with the exception of dust generation and operator ease. High media flow rates led to greater dust and required the operator to monitor more carefully the flow adjustment valve to account for changing media flow characteristics.

According to this qualitative assessment, those test runs conducted with standard operating parameters achieved the highest qualitative rating with a total score of 42 points.

8.3 CARC Paint System Removal

A number of CARC painted fog oil smoke generator sets were depainted with Composition Materials, and with walnut shells. The results of these tests are shown in Table 8-3.

The average CARC paint removal rate using Composition Materials was 23.1 sq in/min at an operating pressure of 30 psi. For walnut shells at a 45 psi operating pressure, the average CARC system paint removal rate was lower than that of Composition Materials, the 95% confidence range of walnut shell paint removal rates was 11.1 to 25.9 sq in/min. For Composition Material, the 95% confidence range of paint removal rates based on the reproducibility variance was 16.5 to 26.7 sq in/min. Therefore, considering the reproducibility of our test results, the CARC system paint removal rates of the two medias were within a similar range.

TABLE 8-3

CARC SYSTEM PAINT REMOVAL RESULTS

Media	Depainted Area (sq in)	Grit Factor	Adjusted Depainted Area (sq in)	Depainting Time (min)	Paint Removal Rate sq in/min
Composition Materials	279	1.0	279	11.0	25.4
	279	1.0	279	13.5	20.7
	279	1.0	279	15.0	18.6
	279	1.0	279	13.0	21.5
	279	1.0	279	9.5	29.4
Walnut Shells	306	1.0	306	16.5	10.5
	306	1.0	306	13.5	22.7
	306	1.0	306	21.0	14.6
	306	1.0	306	17.0	18.0

Source: Arthur D. Little, Inc.

Table 8-4 compares the CARC system paint removal of Composition Materials and walnut shells with the Test Series 2 conventional paint system removal results of the two medias. Based on these results, CARC paint system removal required approximately 2 times the length of time required for conventional paint removal.

This evaluation is based on very limited testing totally only 4 hours of blasting (Test Runs 3.1.5 and 3.2.0). More extensive testing of CARC paint systems was conducted in Test Series 4 and is discussed in Chapter 9.

8.4 Conclusions

The following conclusions were drawn from the results of Test Series 3:

- Test results showed that increasing blast pressure increased both media consumption and paint removal rates. Selection of an optimal blast pressure depends primarily on an economic trade-off between these two parameters. Increased blast pressures were not appropriate when blasting equipment parts where warping or pitting was a concern. Increased blast pressure also led to reduced operator efficiency.

- Media consumption rates were higher at a 4 inch blast stand off distance than at a 16 inch blast stand off distance. Due to hose inflexibility and the operator's physical limitations, varying blast stand off distance to achieve optimal paint removal and media consumption was limited in a manually operated blast cabinet. Varying blast stand off distance to achieve optimal paint removal and media consumption is an option, however, for an automated system.

- Optimum media flow rate is determined by efficient system operation. Furthermore, as media breaks down during blasting, media flow must be monitored and adjusted to account for changing flow characteristics.

- Based on our test results, the following blast parameters optimized depainting performance:

  - 30 to 40 psi blast pressure,
  - 6 to 10 inch blast stand off distance, and
  - 4 to 5 lb/min media flow rate.

- For both plastic media (3.5 mohs) at 30 psi and walnut shells at 45 psi, CARC paint system removal required approximately two times the length of time required for conventional paint removal.

TABLE 8-4

CARC VERSUS CONVENTIONAL PAINT REMOVAL RATES
FOR FOG OIL PUMP SMOKE GENERATOR SETS

MEDIA	PAINT SYSTEM	AVERAGE PAINT REMOVAL RATE (sq in/min)	95% CONFIDENCE LIMITS (+/-)
Composition Materials	CARC	23	7.4
Composition Materials	Conventional	47	4.9
Walnut Shells	CARC	18	6.6
Walnut Shells	Conventional	34	4.1

Source: Arthur D. Little, Inc.

Arthur D Little

9.0 TEST SERIES 4 RESULTS AND ANALYSIS

9.1 Results

Test Series 4, conducted from May to October 1988, tested PMB in a walk-in blast room under production-scale conditions. Tests were conducted with three media; Composition Materials Plasti-Grit Hard (20-30 mesh), walnut shells (12-16 mesh), and a combination of 80% plastic media and 20% glass beads. 70 test runs were performed, and a total of 347 hours of blasting was accomplished. Large equipment items such as 8V engine containers and water tanks were chosen for testing. Specialty items such as electronic shelters, projectiles and aluminum covers which are constructed of delicate substrates and require atypical depainting procedures were also blasted. CARC painted containers were also depainted and the resulting paint removal rates were compared with the paint removal rates achieved for conventionally painted containers. Unpainted blenders and panels from M2-12 pumps and M12 heater units were blasted prior to painting in order to clean and roughen surfaces to ensure better paint adhesion. A rough-up rate, instead of a paint removal rate, was calculated for these parts. A total of 240 parts and 350 panels with a total area of 44,000 sq ft were depainted, while 30 parts and 695 panels with a total area of 5,200 sq ft were roughened.

Test series 4 was expanded from the original test plan (5) for the following reasons:

- The majority of abrasive blasting conducted throughout the Army Depot system is done in large blast rooms. Therefore, it was decided that more blast room tests were needed to provide a more complete and adequate data base.

- There were more variables to control in the blast room than in the blast cabinet. For instance, ventilation rate had to be optimized in the blast room and wider variety of blast pressures were possible in the blast room. To adequately optimize these variables in order to correctly assess abrasive blast media performance, additional blast room tests were necessary.

- An objective of the test program was to identify the type of equipment PMB was best suited to depaint. By expanding the blast room testing, a larger variety of equipment could be tested.

- Based on the favorable walnut shall blasting results in Test Series 2, it was important to evaluate walnut shell blasting as an option to PMB in the blast room. Additional walnut shell testing was incorporated into the program.

- Prior to the demonstration test program, blast operators at LEAD added glass beads to plastic media to improve rust removal. To evaluate this practice, tests were added to the demonstration test program using a combination of plastic and glass as the blast media.

Appendix B describes the parts depainted. Appendix D lists the number of parts depainted and the corresponding depainting times per part accomplished during each test run. Table 9-1 lists the paint removal, rough-up and media consumption rates achieved during Test Series 4. In this table, items are grouped together based on size, shape and depainting procedure used. For example, Model 95 and 96 8V engine, transmission, and transfer containers, are all grouped in the large containers category, because they are all of similar shapes and are depainted using basically the same blasting procedure.

9.2 Analysis

Paint removal rates in Test Series 4 were evaluated as a function of type of equipment, blast pressure, paint system (CARC versus conventional) and type of abrasive blast media used (plastic, walnut, plastic/glass). Rough-up rates for unpainted parts and panels were also calculated and evaluated. Stand off distance (18 to 30 inches), media flow rate (6 to 9 lb/min), and angle of impact (60 to 90 degrees) were standardized as much as was practical for production-scale testing.

Media consumption rates were evaluated as a function of blast room ventilation rate, blast pressure, and type of blast media.

Due to mechanical problems with the test equipment, several test results are not used in the data analysis, and are listed below:

- Media Consumption Rate Results: Test Runs 4.0.0 - 4.0.11, 4.1.0 - 4.1.2, 4.2.0, and 4.2.1

- Paint Removal Rate Results: Test Runs 4.0.0, 4.0.1, 4.0.6, 4.0.29, and 4.0.31

9.2.1 Paint Removal Rates

Equipment Parts

Table 9-2 lists the average paint removal rates achieved for the various categories of parts blasted at different blast pressures using plastic media blasting. The test results show, that at a given blast pressure, there was considerable variation in the paint removal rates achieved for the different groups of parts blasted. For example, at 40 psi, the average paint removal rate for containers was 174 sq ft/hr while the average paint removal rate for medium size parts was 40 sq ft/hr. Some of the reasons for the variations in paint removal rates were part size, part complexity, type of paint, substrate material, degree of paint removal required, and degree of paint blistering. Due to these factors, paint removal rate comparisons cannot be made between groups of equipment. The following paragraphs discuss the groups of equipment and the factors responsible for their relative paint removal rates.

TABLE 9-1

TEST SERIES 4: RESULTS

TEST RUN NO.	PRESSURE (psi)	WATER TANKS (sq ft/hr)	LARGE CONTAINS (d) (sq ft/hr)	FRAME ASSEMBLIES (e) (sq ft/hr)	SHELTERS (sq ft/hr)	PROJEC-TILES (sq ft/hr)	MEDIUM SIZE PARTS (sq ft/hr)	CARC CONTAIN (f) (sq ft/hr)	PAINTED PANELS (sq ft/hr)	UNPAINTED PANELS (sq ft/hr)	UNPAINTED MED SIZE PARTS (g) (sq ft/hr)	TOTAL TIME (hr)	MEDIA CONSUM (lbs)	MEDIA CONSUM RATE (lbs/hr)
4.0.0 (a)	65	166	---	---	---	---	---	---	---	---	---	1.48	---	---
4.0.1	65	196	218	---	---	---	---	---	---	---	---	0.67	---	---
4.0.2	50	---	213	---	---	---	---	---	---	---	---	1.28	---	---
4.0.3	50	---	243	22	---	---	---	---	---	---	---	2.95	---	---
4.0.4	60	---	142	18	---	---	---	---	---	---	---	3.33	---	---
4.0.5	55	---	233	24	---	---	---	---	---	---	---	3.33	---	---
4.0.6	50	---	235	---	---	---	---	---	---	---	---	1.10	---	---
4.0.7	50	---	184	---	---	---	---	---	---	---	---	1.98	---	---
4.0.8	50	---	211	---	---	---	42	---	---	---	---	7.00	283	40
4.0.9	60	79	190	---	---	---	---	---	---	90	---	4.45	133	30
4.0.10	60	---	---	---	---	---	56	---	159	---	225	3.58	68	19
4.0.11	55	---	---	---	---	---	---	145	---	---	---	3.50	196	56
4.0.12	50	---	243	---	132	---	---	---	---	---	---	5.13	178	35
4.0.13	45	---	179	---	---	---	---	151	69	374	---	4.92	191	39
4.0.14	50	104	210	---	---	---	---	171	---	---	---	4.63	136	29
4.0.15	40	77	219	---	---	---	---	133	---	---	---	5.67	167	29
4.0.16	40	---	---	---	---	---	---	---	76	175	---	3.42	100	29
4.0.17	40	---	197	---	---	---	68	---	71	---	---	9.40	300	32
4.0.18	40	---	192	---	---	---	55	---	73	250	---	4.67	146	31
4.0.19	40	---	232	---	---	80	14	---	---	---	---	4.40	241	55
4.0.20	40	75	210	---	---	---	---	---	---	---	---	3.55	130	37
4.0.21	40	---	125	---	---	---	---	90	106	348	---	8.70	64	7
4.0.22	40	157	187	---	---	---	---	---	---	---	---	4.12	74	18
4.0.23	40	---	152	---	---	---	---	---	---	---	---	5.12	91	18
4.0.24	40	96	280	18	---	---	---	65	---	--	---	7.03	190	27
4.0.25	50	---	---	---	---	---	---	164	---	---	---	4.97	117	24
4.0.26	50	---	278	---	---	---	---	---	162	426	---	4.42	198	45
4.0.27	50	---	118	---	---	---	---	---	---	---	---	7.90	257	33
4.0.28	40	86	144	---	168	---	35	---	---	---	84	6.95	216	31
4.0.29	50	261	317	---	---	---	---	---	---	---	---	1.90	58	29
4.0.30	50	149	245	---	---	--	---	---	---	---	---	4.58	145	32
4.0.31	50	137	---	---	---	---	---	---	---	---	---	4.37	139	32
4.0.32	50	145	---	---	---	---	---	---	97	243	---	6.10	257	42
4.0.33	60	98	177	---	---	---	---	---	---	---	---	7.72	240	31
4.0.34	60	---	194	---	---	17	---	---	---	247	---	5.55	196	35
4.0.35	60	---	191	---	---	---	---	---	96	---	---	5.55	213	38
4.0.36	60	---	141	---	---	---	110	--	---	---	146	6.93	224	32
4.0.37	60	---	142	---	---	---	76	---	80	328	---	6.17	282	46
4.0.38	40	---	127	---	---	---	---	---	---	159	---	5.53	142	26
4.0.39	40	---	130	---	---	---	---	---	---	---	---	4.25	130	31
4.0.40	40	---	85	---	---	---	---	---	---	---	---	4.28	123	29
4.0.41	40	---	145	---	---	---	---	---	---	---	---	3.92	118	30
4.0.42	40	---	144	---	---	---	45	---	137	---	---	5.25	151	29
4.0.43	40	---	163	---	---	---	74	---	---	---	---	6.67	224	34
4.0.44	40	137	152	---	---	---	---	---	---	---	---	5.17	189	31
4.0.45	50	---	171	---	---	44	---	---	---	339	---	6.67	---	---

TABLE 9-1 (continued)

TEST SERIES 4: RESULTS

TEST RUN NO.	PRESSURE (psi)	WATER TANKS (sq ft/hr)	LARGE CONTAINS (d) (sq ft/hr)	FRAME ASSEMBLIES (e) (sq ft/hr)	SHELTERS (sq ft/hr)	PROJEC-TILES (sq ft/hr)	MEDIUM SIZE PARTS (sq ft/hr)	CARC CONTAIN (f) (sq ft/hr)	PAINTED PANELS (sq ft/hr)	UNPAINTED PANELS (sq ft/hr)	UNPAINTED MED SIZE PARTS (g) (sq ft/hr)	TOTAL TIME (hr)	MEDIA CONSUM (lbs)	MEDIA CONSUM RATE (lbs/hr)
4.1.0 (b)	60	---	188	---	---	---	---	---	---	---	---	2.78	210	76
4.1.1	50	125	145	---	---	24	60	---	---	---	---	3.33	188	56
4.1.2	40	88	77	---	---	---	21	---	---	---	---	5.53	135	24
4.1.3	50	78	81	---	---	---	---	---	---	---	---	4.45	117	26
4.1.4	50	---	100	---	---	---	---	---	---	---	---	5.17	124	24
4.1.5	50	---	81	---	---	---	---	---	115	838	---	4.75	190	40
4.1.6	70	---	174	---	---	---	---	---	98	---	---	6.50	378	58
4.1.7	70	---	117	---	---	---	---	---	---	---	---	4.67	197	42
4.1.8	70	---	110	---	---	---	---	---	---	---	---	6.62	341	52
4.1.9	70	---	134	---	---	---	44	---	65	567	---	6.22	371	60
4.1.10	80	135	---	---	---	---	---	---	119	658	---	3.50	153	44
4.1.11	80	173	194	---	---	---	---	---	---	425	---	10.20	508	50
4.1.12	80	64	228	---	---	---	---	---	---	591	---	5.63	349	62
4.1.13	80	198	---	---	---	---	40	118	---	---	---	6.00	306	51
4.1.14	80	---	130	---	---	40	---	---	164	240	---	4.80	286	60
4.1.15	50	---	---	---	---	---	---	102	87	240	---	4.50	141	31
4.2.0 (c)	40	---	160	---	---	---	---	---	---	---	---	4.00	---	---
4.2.1	40	---	154	---	---	---	---	---	120	---	---	4.38	---	---
4.2.2	40	---	91	---	---	---	35	---	---	---	71	5.20	168	32
4.2.3	40	---	113	---	---	---	---	---	---	200	184	5.55	142	26
4.2.4	40	---	133	---	---	---	---	---	---	---	---	5.37	121	23
4.2.5	40	---	113	---	---	---	78	---	---	---	40	5.17	123	24
4.2.6	40	128	121	---	---	---	73	---	---	---	---	6.08	164	27
4.2.7	50	---	153	---	---	---	---	138	---	---	---	5.07	120	24

(a) Media: Composition Materials Plasti-Grit PG 3 Hard (test runs 4.0.0 to 4.0.29)
(b) Media: Walnut shells (test runs 4.1.0 to 4.1.2)
(c) Media: 80% Composition Materials Plasti-Grit PG 3 Hard and 20% Glass beads (40 60 mesh)
(d) Large containers include 8V engine (model 95 and 96), transmission and transfer containers
(e) Frame assemblies include M2-12 pumps and internal drives
(f) CARC painted containers
(g) Unpainted parts include blenders

Source: Arthur D. Little, Inc.

Arthur D Little

TABLE 9-2
WALK-IN BLAST ROOM PMB AVERAGE PAINT REMOVAL RATES
(all units in sq ft/hr unless otherwise noted)

EQUIPMENT GROUP	BLAST PRESSURE (PSI) 40	50	60
CONTAINERS(a)	174	222	168
WATER TANKS	105	134	89
MEDIUM SIZE PARTS	48	42	80
PAINTED PANELS	75	162	159
FRAME ASSEMBLIES(b)	18	22	18
SHELTERS	168	132	- - -
PROJECTILES	80	44	17
CARC CONTAINERS	96	137	- - -
UNPAINTED PANELS	232	336	221

(a) Conventionally painted 8V engine(model 95 and 96), transmission, and transfer containers
(b) Frame assemblies include M2-12 pumps and internal drives

Source: Arthur D. Little, Inc.

The containers group consisted of 8V engine (model 95 and 96), transmission, transfer and 8V shipping and storage containers. Paint removal rates for this group were higher than the rates achieved when blasting any of the other groups of equipment. The high rates of paint removal were due to the shape and complexity of the parts and the degree of depainting required. The cubicle containers all had large flat surfaces and were typically easier to depaint than the smaller more convoluted parts. The blast stroke used by the operator was steady, not overlapping and more efficient. The depainting procedure required for these parts also varied slightly from the other equipment groups. Although the containers were depainted on the inside as well as the outside, only the outside was completely depainted. If the inside coating adhered well and had not blistered, the inside was "brush blasted" to roughen the paint surface for subsequent painting. This "brush blasting" is included in the paint removal rate. As the degree of blistering varied from container to container, the amount of "brush blasting" varied for each container. Brush blasting was typically quicker than the regular blasting procedure and consequently contributed to increased paint removal rates. However, the inside coatings of certain parts were extensively blistered and the inside coatings of these parts were completely depainted. Consequently, paint removal rates sometimes varied significantly even at the same pressure, (for example, from a high of 260 sq ft/hr to a low of 85 sq ft/hr at 40 psi for Test Runs 4.0.24 and 4.0.40, respectively). Since large containers have large flat surfaces, the paint removal rates achieved for these parts show the best correlation to paint removal rates for airplanes which typically report rates of 180 sq ft/hr[3].

Like the large containers, water tanks are large cubicle shaped equipment. Again, like the large containers, paint removal rates were higher than the rates obtained on smaller parts because of the large flat surfaces. The rates were lower than the containers though, because the outside was completely depainted, and the inside was not depainted at all so there was no "brush blasting". Also, as many of these tanks were painted in the field with a layer of camouflage paint, the water tank paint coating was often 3 or 4 mils thicker than the coatings on the large containers.

The medium size parts group included engine covers, plate door and grills, ration boxes, periscope corners, spades, cooling fans, water tank covers, and hose reels. These parts exhibited a variety of shapes but were all about the same size, and considerably smaller than containers and water tanks. These parts were made of steel and aluminum. The aluminum parts were thick enough so substrate damage was not a problem.

The low paint removal rates achieved for the medium size parts group were primarily due to part size and complexity. These parts often had many angles which required the operator to change the blast angle. As an example, when blasting cooling fans, the blast angle had to be modified for each blade of the fan. Furthermore, the fan housing often

blocked the optimum blast angle. Given the diversity of parts grouped in this section, a wide variety in paint thickness and paint blistering was observed.

The painted panels group consisted of thin sheet metal parts from M2 Heater and M2-12 Pump units. These parts had similar removal rates to water tanks. Most of these panels were large enough (approximately 10 sq ft) so that the operator could develop an efficient depainting pattern during blasting. Although, some panels were much smaller (approximately 1-3 sq ft). Typically, the paint coating was quite thin (1-3 mils), which slightly improved the paint removal rate. These panels warped slightly during blasting. Often times warping caused by blasting on one side of a panel could be rectified by subsequent blasting on the other side. LEAD quality control inspectors indicated that since these parts were not sensitive equipment items, slight warping was not a problem.

Although frame assemblies were initially incorporated into the test program, these parts were eventually discontinued, because the plastic media did not remove the deep pitted rust on these parts. Rust removal from abrasive blasting is discussed in Chapter 12. This group of parts had a very low paint removal rate (18 to 24 sq ft/hr) due to the configuration of the equipment. The parts consisted mainly of connecting bars having large open spaces around the bars. Consequently when the operator passed over the metal surface with the blast spray, only part of the spray came in contact with the painted bar and the remainder of the spray fell in the open space surrounding the bar, reducing the efficiency of the paint removal.

Electronic shelters, specialty items, were large units (538 sq ft) built with a sandwich type construction with a thin sheet of laminated aluminum on each side of an internal honeycomb structure. Currently at LEAD, these parts were blasted with walnut shells at 90 psi. Adequate paint removal was achieved, but warping and delamination of the thin aluminum sheets resulted. Two electronic shelters were depainted, one at 50 psi and one at 40 psi during the test program. Using PMB, the aluminum sheets did not warp or delaminate and adequate paint removal was achieved. As the shelters are primarily large flat surfaces, paint removal rates were similar to the rates for water tanks.

Projectiles of two types were blasted during the test program: steel/brass 175 MM projectiles and fiberglass missile tips. The 175 MM projectiles depainted easily with PMB at 40 psi. No damage to the steel or brass was observed and there was no collection of media in the joints. The missile tips were depainted with plastic media at 30, 40 and 50 psi, depainted with walnut shells at 50 and 80 psi, and with the plastic media/glass beads combination at 40 psi. When using PMB, the fiberglass was not damaged at 40 or 50 psi. Some damage was found at 30 psi, and this was most probably due to the longer dwell time needed at 30 psi for adequate paint removal. When blasting with walnut shells, no damage was noticed at either pressure. The most damage was observed when blasting with the plastic media/glass beads combination

where, due to the hardness of the glass, the layers of fiberglass were removed. Overall, projectiles were similar in size and shape to medium size parts and their paint removal rates were similar.

Chemical Agent Resistant Coating (CARC)

Several containers painted with CARC paint systems were blasted to determine the effectiveness of PMB for CARC paint removal. A previous study by Arthur D. Little, Inc. (5) had identified the concern of many depots that, because of the strong chemical bonding of polyurethane paint, PMB would not be effective at removing CARC paint.

Our test results showed that PMB was effective at removing CARC paint systems. The paint removal rates for CARC painted containers was 96 and 137 sq ft/hr at 40 and 50 psi respectively. These paint removal rates were approximately 50% lower than conventional paint removal rates. Figure 9-1 compares conventional and CARC paint removal rates achieved with the blast medias at their optimum blast pressures. There are three primary reasons for the slower rates.

1) The chemical bonding of the polyurethane CARC paint is stronger and resists abrasion much better than conventional paint chemical bonding.

2) The CARC painted parts had generally thicker paint coatings than the conventionally painted parts (typically 3 to 5 mils for CARC vs 1 to 4 mils for conventional).

3) The CARC painted parts did not show any visible signs of blistering. Since CARC paint systems have only been applied over the past 2 to 3 years, these parts have yet to spend an extensive amount of time in the field, and therefore have not undergone the same weathering as the conventional painted parts which have been in the field longer.

Based on discussions with LEAD personnel, chemical stripping with currently used alkaline solutions has not been effective at removing CARC paint. Methylene chloride strippers have shown to be somewhat effective on CARC paint, but their use is banned by EPA and OSHA. LEAD is evaluating new solutions to remove CARC paint, but to date they have not found a suitable chemical stripping solution for ferrous parts which will remove CARC paint and also comply with EPA and OSHA regulations. Consequently, abrasive blasting and particularly PMB may prove to be an important alternative for removing CARC paint.

Rough-Up Rates

PMB was effective at removing dirt and slightly roughening the metal surface of unpainted panels and parts to establish an anchor pattern for subsequent painting. As the blast operator was not concerned about complete paint removal and brushed over the panel surfaces quickly, these rough-up rates were approximately 100% higher than painted panels' paint removal rates. Like the painted panels, slight warping

Figure 9-1
CARC vs. Conventional Paint Removal Rates For Medias Tested

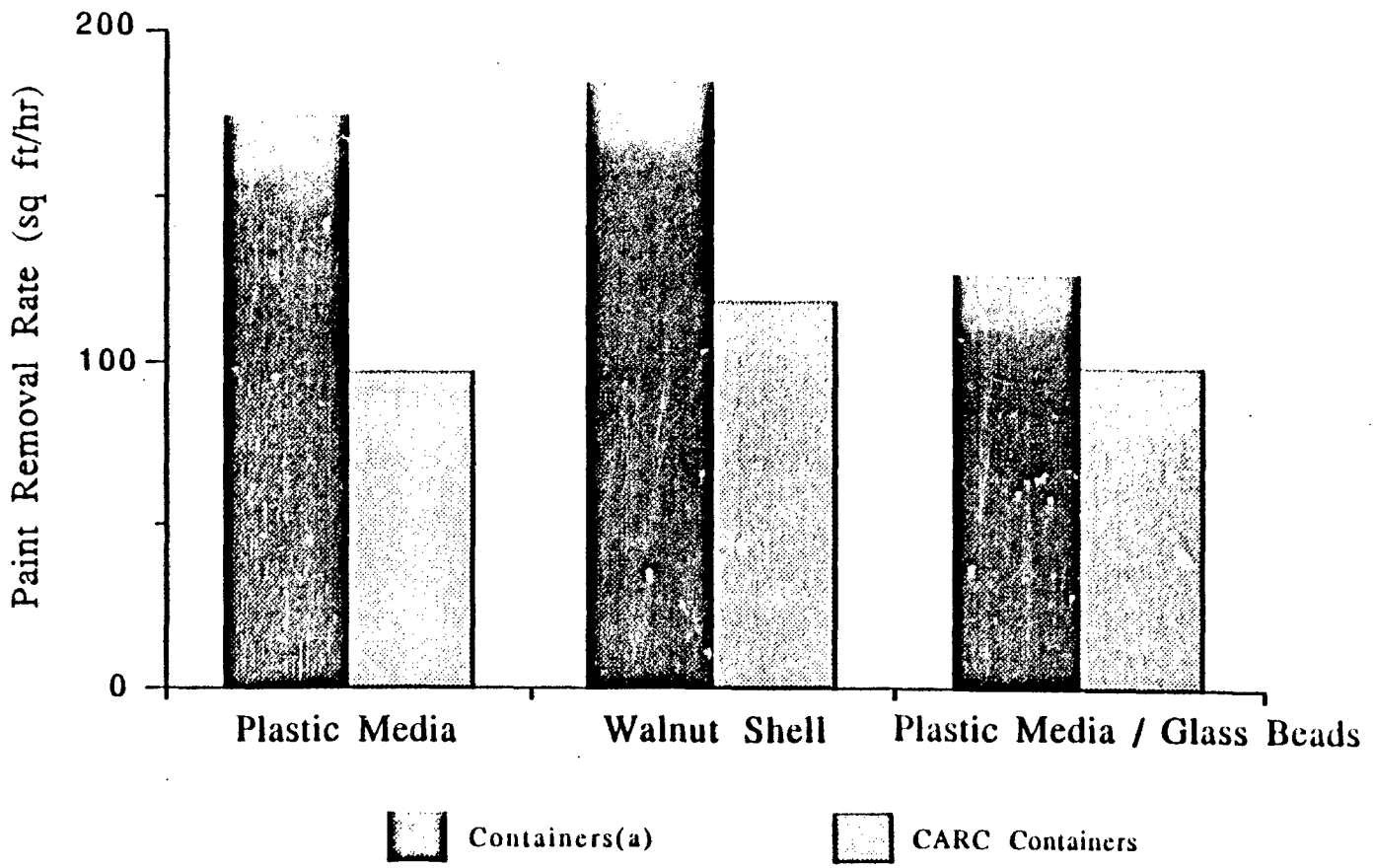

(a) Conventionally painted 8V engine (model 95 and 96), transmission, and transfer containers

Source: Arthur D. Little, Inc.

occurred during blasting, but it was not a problem according to LEAD Quality Control. The resulting anchor pattern was adequate for subsequent painting.

Blast Pressure

Blast pressures, reported as gauge pressures, were 7 to 10 psi higher than the nozzle pressures in the blast room.

The results of Test Series 3 demonstrated that as pressure was increased, paint removal increased. The results of Test Series 4 do not demonstrate such a clear correlation. Based on Table 9-2, the paint removal rates for shelters and projectiles were highest at 40 psi, for containers, water tanks, painted panels and frame assemblies at 50 psi, and for medium size panels at 60 psi. Therefore, all three blast pressures were adequate for high paint removal rates and that the other factors, such as part size and complexity previously discussed, produced greater effects on paint removal rates.

The impact of varying blast pressure on media consumption rates is discussed in Section 9.2.2. Impacts of varying blast pressures include the following:

- Warping of painted and unpainted panels was greater at 60 psi than at the lower blast pressures tested, but, as previously noted, LEAD quality control inspectors indicated that since these parts were not sensitive equipment items, slight warping was not a problem.

- At the blast pressures tested (40 and 50 psi), no noticeable damage to the thin aluminum panels on the electronic shelters occurred using plastic media, contrary to the results achieved with walnut shells at higher pressures.

- There was no damage to the fiberglass missile tips at 40 and 50 psi blast pressure. At 30 psi, a slight roughening of the coating was noticed due to the longer dwell time.

- Higher blast pressures did not improve PMB's ability to remove rust.

- For areas with thick paint such as paint drips and runs, paint removal appeared faster at the higher pressures.

Walnut Shell Blasting

Table 9-3 lists the paint removal rates achieved when using walnut shells. The same general trends occurred for walnut shells as occurred for PMB concerning relative paint removal rates for the various equipment groups. Containers had the highest paint removal rates followed by water tanks, painted panels and CARC containers and finally medium size parts.

TABLE 9-3
WALK-IN BLAST ROOM WALNUT SHELL BLASTING AVERAGE PAINT REMOVAL RATES
(all units in sq ft/hr unless otherwise noted)

EQUIPMENT GROUP	WALNUT SHELL BLASTING (PSI) 50	70	80
CONTAINERS(a)	102	126	184
WATER TANKS	102	- - -	142
MEDIUM SIZE PARTS	60	44	39
PAINTED PANELS	91	80	141
CARC CONTAINERS	102	- - -	118
UNPAINTED PANELS	538	567	478

(a) Conventionally painted 8V engine (model 95 and 96), transmission, and transfer containers

Source: Arthur D. Little, Inc.

Arthur D Little

Based on limited testing, walnut shell blasting at 80 psi removed CARC paint slightly faster than PMB (118 sq ft/hr for walnut shell blasting vs 96 sq ft/hr for PMB at 40 psi). Figure 9-1 compares the conventional vs. CARC paint removal rate using walnut shells.

High rough-up rates were obtained on unpainted panels. Walnut shell blasting adequately removed the dirt and slightly roughed up the panels. Walnut shell rough-up rates were approximately twice as high as the rates for PMB. As higher pressures were used with walnut shells, greater stand off distances were used by the operators to decrease warping and concurrently, the areas of the blast patterns increased. Therefore, fewer blast strokes were needed to blast any given part.

LEAD personnel expressed concern that walnut shell blasting left an oily residue on the panels, which affected subsequent painting. Arthur D. Little on-site engineers visually inspected the panels and did not find any oily residue.

Unlike PMB, blast pressure had a definite impact on paint removal rates. Containers, water tanks, painted panels and CARC containers all showed the highest paint removal rates at 80 psi. Despite the other variables, blasting at 50 and 70 psi still produced lower paint removal rates than blasting at 80 psi. Because of the softness of the media, a high blast pressure (80 psi) is required for adequate paint removal.

One significant problem with walnut shell blasting was the inability to remove surface rust. Several containers and panels were rejected by quality control inspectors because surface rust had not been adequately removed. This topic is further discussed in Chapter 12.

Plastic Media/Glass Bead Combination

Table 9-4 lists the average paint removal rates for each media tested at their optimum blast pressure. This table includes results from testing using a combination of 80% plastic media and 20% glass beads as the blast media. This set of tests was run to determine if improved rust removal could be achieved without significantly reducing PMB paint removal rates or increasing PMB media consumption rates.

The test results show that except for the containers equipment group, the paint removal rates for each equipment group are similar to the rates achieved when using only plastic media. The containers' paint removal rate with the plastic media/glass bead combination is lower (126 sq ft/hr) than PBM (174 sq ft/hr). Because the plastic media/glass bead combination effectively removed rust, the blast operators increased the dwell time on the parts. Thus, although the actual paint removal rates were about the same as plastic media alone, a lower rate was reported due to the additional time spent removing the rust. Ultimately, this additional time is advantageous from an economic standpoint because, if the rust is not removed during

TABLE 9-4
WALK-IN BLAST ROOM AVERAGE PAINT REMOVAL RATES FOR EACH MEDIA TESTED AT OPTIMUM PRESSURES
(all units in sq ft/hr unless otherwise noted)

EQUIPMENT GROUP	PLASTIC MEDIA BLASTING (40 PSI)	WALNUT SHELL BLASTING (80 PSI)	PLASTIC MEDIA / GLASS BEAD BLASTING (40 PSI)
CONTAINERS(a)	174	184	126
WATER TANKS	105	142	128
MEDIUM SIZE PARTS	48	39	55
PAINTED PANELS	75	141	120
CARC CONTAINERS	96	118	97
UNPAINTED PANELS	232	478	200

(a) Conventionally painted 8V engine (model 95 and 96), transmission, and transfer containers

Source: Arthur D. Little, Inc.

ADL

blasting, it may have to be hand sanded after blasting and hand sanding is very labor intensive (as much as 1 additional man hour per container).

The plastic/glass combination was also effective at removing CARC paint. The paint removal rates were similar to the rates using plastic media and walnut shells. Typically, the CARC containers were not rusted, so no extra dwell time for rust removal was required.

The plastic media/glass beads combination was also effective at roughing up unpainted panels. Besides removing dirt and establishing an anchor pattern, any rust on the panels was also removed. The rough-up rates were approximately the same as the PMB rates,

Five tests were conducted at 40 psi blast pressure so that an adequate data set could be developed for comparison to other blast media. One test was conducted at 50 psi to determine if any obvious changes in paint removal were apparent, and no significant differences were seen.

The plastic media/glass beads combination was effective at removing rust on the large containers and panels. Rust removal is discussed more thoroughly in Chapter 12.

The main negative aspect of blasting with this combination was the increased substrate damage on certain parts. For example, when blasting the fiberglass missile tips, the glass beads removed the top layers of fiberglass on the shells. On the sheet metal panels deeper pitting resulted. With more sensitive equipment, the use of the plastic media/glass beads combination, should be evaluated on a case by case basis.

Blasting with 100% glass beads in the system was not tested in the blast room. Reports of high media consumption rates and low paint removal rates made the testing unnecessary. For comparison though, assuming glass bead blasting has approximately the same paint removal rate and 300% higher media consumption rate than plastic media, similar to the results from the blast cabinet, paint removal rates for containers would be 175 sq ft/hr, and media consumption rates in the blast room would be 75 lb/hr. This number was generated for comparison purposes in Table S-1.

9.2.2 Media Consumption Rates

The average media consumption rates for Test Series 4 are listed in Table 9-5. Media consumption rates include the broken down media and removed paint chips. The paint chips can represent a significant percentage of the total amount of waste collected. For example, based on typical operating conditions of an average paint removal rate of 150 sq ft/hr, a paint thickness of .004 in and a density of cured paint of 11.7 lb/gal, the paint waste generation rate is 4 lb/hr. This paint waste rate represents approximately 20% of the total media consumption rate for PMB (at 40 psi), and the plastic media/glass bead combination blasting (at 40 psi), and 10% of the total media consumption rate for

TABLE 9-5

BLAST ROOM TESTING AVERAGE MEDIA CONSUMPTION RATES
(all units in lb/hr unless otherwise noted)

BLAST ROOM VENTILATION RATE	BLAST MEDIAS						
	PLASTIC MEDIA			WALNUT SHELLS			PLASTIC MEDIA / GLASS BEADS
	40 PSI	50 PSI	60 PSI	50 PSI	70 PSI	80 PSI	40 PSI
250 fpm	36	32	---	---	---	---	---
100 fpm	26	34	36	30	53	54	26

Source: Arthur D. Little, Inc.

Arthur D Little

walnut shell blasting (at 80 psi). The paint/waste generation rate varies significantly depending on the paint removal rate and thickness of the paint. The analysis of media consumption in this report does not distinguish between media waste generation and paint waste generation because of this variability and the fact that paint waste generation occurs regardless of the media used.

The media consumption rates listed in Table 9-5 are reported in terms of lb waste generated per hour. Other reports (ref) have discussed media consumption in terms of lb/sq ft paint coating removed. Although this type of unit was not used in the media consumption analysis conducted in this report, media consumption rates are reported below in terms of lb/sq ft for each of the blast media tested at their optimum blast pressures for comparison purposes.

Abrasive Blasting Media Consumption Rates
in Units of lbs/sq ft

Equipment	Plastic Media (40 psi)	Walnut Shells (80 psi)	Plastic media/ Glass Beads (40 psi)
Containers	0.15	0.29	0.21
Water Tanks	0.25	0.38	0.20
Medium size Parts	0.54	1.38	0.47
Painted Panels	0.35	0.38	0.22
CARC Containers	0.27	0.46	0.27

The media consumption rates for several tests conducted during Test Series 4 could not be used in the analysis for three reasons: dust collection cartridge loading, mechanical problems, and recycle calibration.

The dust collection system was designed so that the cartridges purged automatically when the pressure differential across the filters reached a certain value. At the beginning of Test Series 4, the cartridges were new and, therefore, had to load with spent media before automatic purging took place. Because of this initial loading, no spent media was collected in the waste drums during Test Runs 4.0.0 to 4.0.2.

Certain mechanical problems with the dust collection system were experienced during Test Runs 4.0.3 to 4.0.8. Therefore, the waste collection data taken during these test runs are unreliable. Ultimately, the dust collection cartridges had to be replaced after Test Run 4.0.8. After their replacement, the new dust collection

cartridges had to again load to equilibrium. As a result, the media consumption measurements taken during Test Runs 4.0.9 to 4.0.11 were inapplicable to analysis.

The recycle system was not optimally calibrated for the first three test runs using walnut shells (Test Runs 4.1.0 to 4.1.2) and consequently, the media consumption results for these test runs were also excluded from analysis.

Finally, during Test Runs 4.2.0 to 4.2.1, the dust collection automatic purging system was malfunctioning. These test results were also excluded from analysis.

Media Consumption Rate Variability

Under the production-scale conditions of the demonstration test program, two parameters of the system contributed to media consumption rate variability: recycle system calibration and dust collection automatic purging.

As described in Chapter 6, the calibration of the recycle system was critical to the control of media consumption. The recycle system in the walk-in blast room was more difficult to optimize than the blast cabinet for several reasons:

- When adjustments were made to the calibration of the recycle system, more time was required to determine the effects of such adjustments because of the larger size of the system.

- Due to the larger size of the system, slight calibration adjustments produced greater impacts on the media consumption rates and it was more difficult to obtain an optimal separation of spent and reusable media.

- The purging of the cartridges of the waste collection system was controlled by an automatic mechanism. Therefore, it was more difficult to determine the effect of the recycle system calibration adjustments on the amount of spent media generated.

The recycle system was monitored two times per day by visually inspecting the spent media to ensure system optimization. Sieve analyses were conducted daily on the spent media and the media remaining in the system to ensure proper separation of media and spent media. Because each type of blast media was used for several consecutive tests, once the system was optimized, minimal further adjustments were needed.

The automatic purging system was not controlled in the test program and purging occurred a different number of times for each test. Each time the system purged, approximately 15 lbs of media emptied into the collection drum. Consequently, the automatic purge affected how much media consumption was recorded. To minimize the impact of the

automatic purge on the test results, all tests at a given set of blast parameters (e.g., walnut shells at 80 psi) were run in succession, and the consecutive test results at each set of parameters were averaged for the analysis, minimizing the impact of the variation in purging.

Ventilation Rate

To evaluate media consumption rate, two blast parameters were varied: blast room ventilation rate and blast pressure.

Initially, the blast room average ventilation rate was set at 250 fpm by the blast room vendor, and Test Runs 4.0.0 to 4.0.21 were performed. For Test Runs 4.0.22 to 4.0.45 and 4.1.0 to 4.2.7, the ventilation rate was lowered to 100 fpm, the minimum requirement of the Army's Industrial Hygiene Division. At 50 psi, PMB media consumption rates remained approximately the same, but at 40 psi, average PMB media consumption rates decreased from 36 lb/hr to 26 lb/hr. Apparently due to the high air flow rate, media that should have been recycled through the reclaimer system was carried directly to waste through the ventilation system.

Blast Pressure

Blast pressure had a significant effect on media consumption rate. As shown in Table 9-5, at the 100 fpm ventilation rate, average PMB media consumption rates at 40 psi were 25% lower than the rates at 50 and 60 psi. At the high 250 fpm ventilation rate, the average media consumption rate at 40 psi (36 lb/hr) was actually higher than the average media consumption rate at 50 psi (32 lb/hr). The effects of ventilation rate appeared to override the effects of pressure on media consumption rate. As media consumption was minimized at 40 psi and PMB paint removal rates were essentially not affected by a change in blast pressure, the optimum PMB blast pressure was 40 psi.

Walnut Shell Blasting

Walnut shell blasting generated significantly higher media consumption rates than PMB, particularly at the higher pressures. At 50 psi, the rates for walnut shell blasting were similar to the rates for PMB, indicating that at similar pressures the two media break down at similar rates. As noted in Section 9.2.1, however, walnut shells blasting at 50 psi did not achieve adequate paint removal. At the optimum blast pressure for walnut shells (80 psi), media consumption rates were 75% higher than the rates at 50 psi. In comparison, the media consumption rate for walnut shells blasting at 80 psi is 100% higher than the media consumption rate for PMB at optimum blast conditions (40 psi).

Plastic Media/Glass Beads

The media consumption rates for the plastic media/glass beads combination were equivalent to the media consumption rates for plastic media alone at the same blast pressure. Given that 80% of the blast grit was plastic media, this result was not surprising.

If tests were run using only glass beads in the blast room, the media consumption rates would be approximately 85 lb/hr. This value is based on a scale-up from the blast cabinet results and is used in Table S-1.

9.3 Conclusions

Based on Test Series 4, the following conclusions were drawn from the PMB testing in the blast room:

- At the same blast pressure, paint removal rates varied according to equipment part size, shape and complexity. Highest paint removal rates were achieved when blasting large smooth surfaces. Lower rates were achieved on small complex parts.

- Unlike Test Series 3 (conducted in the blast cabinet), paint removal rates did not necessarily increase with increased blast pressure in the blast room.

- PMB was effective at removing CARC paint systems. At the pressures tested (40, 50 and 60 psi), the CARC paint removal rates averaged 50% lower than the conventional paint removal rates.

- Plastic media was effective at roughening the surface of new panels and parts, and rough-up rates were twice as fast as paint removal rates.

- PMB was particularly applicable to the cleaning of equipment with delicate substrates where an atypical depainting procedure is required. At 40 to 50 psi, PMB removed paint without delaminating, warping or pitting delicate substrates.

- Lowering the ventilation rate from 250 to 100 fpm decreased media consumption by approximately 10 lb/hr at 40 psi blast pressure.

- At the lower 100 fpm ventilation rate, with plastic media, media consumption was 25% (8 lb/hr) lower at 40 psi than at 50 psi. At the high 250 fpm ventilation rate, media consumption did not decrease with a decrease in pressure.

- Walnut shell paint removal rate was 50% higher at 80 psi than at the lower blast pressures of 50 and 70 psi.

- Increased warping of sheet metal panels was noticeable at 80 psi.

- Media consumption rates (waste generation rates) were 100% higher for walnut shell blasting than for PMB at their optimum conditions.

- At their optimum conditions, plastic media, walnut shells and the combination of plastic beads/walnut shells had equivalent paint removal rates.

- The plastic media/glass beads combination had the same media consumption rate as PMB (26 lb/hr).

- The plastic media/glass bead combination adequately removed corrosion from rusted containers. PMB only removed loose surface rust and walnut shell blasting did not adequately remove the surface rust.

10.0 ECONOMICS

For the depainting of military aircraft, plastic media blasting has proven to be a cost effective alternative to chemical stripping (1). Considerable cost savings have been realized with respect to labor, materials, electricity, down time, and hazardous waste disposal costs. In fact, PMB appears to be the only viable alternative to chemical stripping among the currently available abrasive blast media due to the fact that if proper care and control are utilized, plastic media does not damage delicate aircraft substrates (8,9).

The economic benefit of PMB in the Army Depot System is not as apparent. Most of the Army's inventory of material is constructed of iron, steel and/or thick aluminum rather than the thin aluminum shell of aircraft. Consequently, lower cost abrasive blast media such as sand substitutes, walnut shells, glass beads, and steel shot are used by Army depots because substrate damage is not an issue. In fact, aggressive abrasive media are frequently required to ensure removal of all corrosion on metal surfaces.

Presently, chemical stripping is used at Army depots mainly for small parts which are depainted in dip tanks. The dip tank stripping is much more efficient and less hazardous to workers than open stripping of large items such as aircraft. In the dip tank operations, worker exposure to stripper fumes is limited to a brief period when parts are removed from the tank and hosed down. Proper ventilation of the dip tank eliminates exposure during any other time. The stripper chemicals are used much more efficiently because they remain in the tank until exhausted rather than being used once and washed away. However, even with the limited worker exposure, dip tank operations are coming under scrutiny of health and safety officials. Such scrutiny might lead to further restrictions or even banning of dip tank operations in the future. Because of this possibility and the labor intensive nature of manual blasting of small parts, automated blast systems are under study. Those systems are discussed in Chapter 11. Current depainting operations at LEAD are discussed below, and an economic comparison of a variety of these operations is made.

10.1 LEAD Depainting Operations

Most of the larger parts at LEAD are depainted by blasting in large vehicle-size rooms that utilize steel shot, walnut shells or plastic media. Blast cabinets for the blasting of small parts utilize glass beads and plastic media, and steel shot rotary blasters are used for small and medium sized parts that are not adversely affected by the highly abrasive steel media.

For depainting small parts, which is quite extensive at LEAD, chemical stripping is also utilized. An alkaline stripper (Share Paint and Rust Remover) and a rust inhibitor (Share Rust Inhibitor) are used for ferrous metal while an acid solution (Penstrip NPX) is used for aluminum parts.

Table 10-1 lists the wastes generated from depainting operations at LEAD for 1987. The figures are based on a building by building summary of waste generation (13). The data in the table indicate that walnut shell (51% of total) followed by steel shot (34%) and plastic media (12%) blasting generate the largest quantities of spent media.

10.2 Economic Evaluation of Small Parts

There are four major cost components in any depainting job; labor, materials, waste disposal and facility costs. These are discussed in the following sections.

10.2.1 Labor Costs

The time required to perform each depainting job at LEAD (for example: the blasting of an 8V engine container) is established by the depot's Work Measurement Group. Each job is categorized into specific chores and the amount of time needed to perform each chore is measured. The amount of time to perform the chores are totalled and multiplied by a Personal Fatigue and Delay (PFD) Factor. The PFD accounts for any difficulties in doing the job and the associated down time. Factors included in the PFD are: coffee breaks, mental alertness requirements, interaction with supervisors, amount of standing, heavy lifting, physical requirements and personal time. An example of Time Measurement is as follows:

Job: Plastic Media Blasting a basket of 8V engine parts in a blast cabinet

Chore	Time Allotment (min)
• Separate clamps and other small parts in the basket	0.96
• Load parts into cabinet from basket	8.66
• Activate booth and blast parts	105.00
• Air spray off parts after blasting	2.83
• Unload parts from cabinet into basket	6.53
Sum of Chores	123.98
PFD Factor	x 1.222
Total Time:	151.50 (2.53 hrs)

The time to load and unload parts into the basket includes the time needed to scrape residual gasket material from the equipment parts before blasting. The blast time of 105 minutes includes the time required to refill the pressure pot, correct surging problems or any other short equipment delays, and the time needed to inspect the parts

TABLE 10-1

WASTE GENERATION
FROM DEPAINTING OPERATIONS AT LEAD
(1987)

Media Type	Spent Media (lbs)	Percent of Total
Walnut Shells	469,000	51
Steel Shot	318,000	34
Plastic Media	111,000	12
Glass Beads	17,300	2
Unspecified Blast Grit	6,200	1
Total Blast Residue	921,500	100

Chemical Stripper Type	Spent Stripper (gal)	Percent of Total
1, 1, 1, Trichloroethane	11,500	44
Unspecified Paint Stripper	5,100	20
Share Paint and Rust Remover	3,250	13
Calgon P-2000	2,790	11
Penstrip NPX	1,450	6
EC-900 (MIL-C-46156)	1,100	4
Share Rust Inhibitor	550	2
Oakite 31	110	<1
Total Chemical Stripper Waste	25,850	100

Source: Arthur D. Little, Inc. based on data provided by LEAD

and reblast if paint is not sufficiently removed during the initial blasting. The average blast time based on the Arthur D. Little test program is 80 minutes (as compared to 105 minutes), but this does not include the inspection time or equipment delays. The PFD is an Army standard for all work performed in a blast cabinet. Similarly, a standard PFD has also been assigned for chemical stripping and walk-in blast room operations.

Chemical stripping time allotments are quite different in that time is allotted for moving the baskets in and out of the tanks, but not usually for the time while the basket is in the tank, during which time the operator is performing another job. Time measurements for chemical stripping a basket/pallet of small parts is standardized for all work done in the dip tank because, regardless of the contents of the basket/pallet, the procedure is the same. An example is listed below:

Job: Chemical Stripping a Basket/Pallet of Small Parts

Chores	Time Allotment (min)
• Attach hoist and immerse in tank (acid or alkaline)	3.58
• Remove from tank	1.78
• Steam parts with steam wand	14.30
• Immerse in rust inhibitor tank (alkaline strip only)	0.63
• Remove from tank (alkaline strip only)	0.67
• Drain, inspect, detach hoist	2.23
Sum of Chores	22.59
PFD Factor	x 1.27
Total Time:	28.69 (0.48 hrs)

In addition to paint stripping, the ferrous material parts are dipped in a rust inhibitor solution (Share Rust Inhibitor) to temporarily prevent corrosion. To determine the time allotments for non-ferrous parts, one would subtract the time (1.3 min) for the two chores associated with the rust inhibitor operation from the sum of chores (22.59) before multiplying by the PFD factor.

All chemical stripping and most abrasive blasting (except large containers and other large items depainted in the walk-in blast room) are preceded by a degreasing process. Since degreasing is performed

in a dip tank, the chores associated with degreasing are similar to those for chemical stripping. The total time for degreasing a basket of 8V engine parts is 0.10 hours.

Blast operators are usually a Grade 7 which, at a Step 5 experience level, cost LEAD approximately $37/hr including overhead. Chemical dip tank operators are usually Grade 4, which, at a Step 5 cost LEAD approximately $34/hr (including overhead). Table 10-2 lists the total time allotments and the labor cost for several jobs that are related to our test program.

The time allotments for blasting in Table 10-2 are based on using plastic media blasting. Based on our test program results, the time allotments for walnut shells and glass beads when compared to plastic media are slightly different. Using the time required for blasting a basket of 8V engine parts in a blast cabinet as an example, the actual blast time using plastic media is 1.33 hours. At the blast pressures tested, test results showed that walnut shells were 27% faster and required a blast time of .97 hours. Glass beads were 3% faster and required 1.29 hours of blast time. Therefore, the total time allotment including all necessary additional chores for blasting a basket of 8V engine parts is 2.18 hours for walnut shells and 2.50 hours for glass beads.

10.2.2 Material Cost

Currently there are three main alternatives to PMB available at LEAD; walnut shell blasting, glass bead blasting and chemical stripping. The advantages and disadvantages of these depainting methods is discussed in Section 2.0.

The purchasing cost of the blast media and chemical strippers used at LEAD for paint removal is as follows:

Purchase Cost of Blast Media and Chemical Strippers at LEAD

Media Type	Purchase Cost (1988 $)
Plastic Blast Media	$1.41/lb
Walnut Shells	$0.20/lb
Glass Beads	$0.31/lb
Steel Grit	$0.29/lb
Chemical Stripper Type	
Penstrip NPX	$7.84/gal
Share Paint and Rust Remover	$7.03/gal
Share Rust Inhibitor	$4.71/gal
1,1,1 Trichloroethane	$4.08/gal

TABLE 10-2

TIME ALLOTMENTS AND LABOR COSTS FOR TYPICAL DEPAINTING OPERATIONS AT LEAD

Job	Time Allotment (hours)	Labor[a] Cost (1988 $)
Degrease		
• Basket/Pallet small parts	0.101	3.43
Blast[b]		
• Basket of 8V Engine (models 95 and 96) parts	2.53	93.61
• Pallet of 8V Engine (models 95 and 96) parts[c]	0.50	18.50
• Set of Fog Oil pump parts	0.53	19.61
• Transmission Container	1.64	60.68
• Shipping Container	2.64	97.68
• 8V Engine Container (models 95 and 96)	3.17	117.40
• Decon Power Unit Frame	0.53	19.61
• Water Tank	1.44	53.28
Chemical Strip		
• Basket/Pallet of small parts	0.48	16.32
• Engine Block	0.71	24.14

(a) Labor costs are assumed to be $37/hr for all blasting jobs and $34/hr for all degreasing, steaming and chemical stripping jobs.

(b) Based on tests using plastic media. Time allotments vary slightly if other abrasive blast media is used.

(c) 8V parts found on pellets are different from 8V parts contained in baskets.

Source: Arthur D. Little, Inc., based on data provided by LEAD.

A material cost breakdown for blasting a basket of 8V engine parts is listed below for plastic media, walnut shells and glass beads. The actual blast times and media consumption rates (see below) are based on the Arthur D. Little reach-in blast cabinet test program results.

Material Cost to Abrasive Blast One Basket of 8V Engine Parts in a Blast Cabinet

	Plastic	Walnut	Glass
Media Consumption Rate (lb/hr)	4.9	7.5	16.3
Blast Time (hr/basket)	1.33	0.97	1.29
Total Media Consumption (lb/basket)	6.52	7.24	21.0
Material Unit Cost ($/lb)	1.41	0.20	0.31
Total Material Cost ($/basket)	9.19	1.45	6.50

As mentioned previously, all chemical stripping and blasting except on the large containers is preceded by vapor degreasing with 1,1,1, Trichloroethane. Since this step is the same for all depainting methods, it is omitted from the further economic analysis. However, it is important to note that it is a significant contributor to the hazardous waste generated in the depainting of Army equipment.

Material costs for chemical stripping are more difficult to quantify than abrasive blasting material costs. The dip tank solution is used many times prior to disposal and it is not changed after a specific number of jobs. The frequency of solution changes is based on the operator's judgement as to when the solution is becoming ineffective. Based on discussions with depot personnel, the following assumptions were made to estimate the material costs of a chemical stripping operation:

- The average chemical paint stripping tank has a 1,000 gallon capacity. The average rust inhibitor tank has a 2,000 gallon capacity.
- The strip tanks are emptied and refilled with new solution twice per year.
- All strip tanks are filled with 50% stripping solution, 50% make up water.
- There are approximately 260 working days per year.
- There are eight working hours per day and approximately one new basket of parts is dipped each hour.
- In addition to paint stripping, ferrous material parts are dipped in a rust inhibitor solution after stripping to temporarily prevent corrosion.

- There are two ferrous paint stripper tanks for each rust inhibitor tank.

- The rust inhibitor is refilled six times per year (10% solution, 90% make up water).

- The water costs associated with the steam spray after stripping is negligible.

Material Cost to Chemically Strip Small Parts in a Dip Tank

Operation	Material Cost (1988 $)
Chemical Stripping: one basket of aluminum parts using Penstrip NPX (1000 gals per tank x 50% stripping solution x 2 tank changes per year x $7.84 per gal)/(260 work days per year x 8 baskets per day)	$3.77/basket
Chemical Stripping: one basket of ferrous parts using Share Paint and Rust Remover (1000 gals per tank x 50% stripping solution x 2 tank changes per year x $7.03 per gal)/(260 work days per year x 8 baskets per day)	$4.74/basket
Application of Rust Inhibitor: one basket of ferrous parts using Share Rust Inhibitor (2000 gals per tank x 10% solution x 6 tank changes per year x $4.71 per gal)/(260 work days per year x 16 baskets per day)	

10.2.3 Waste Disposal Costs

Waste disposal operations at LEAD are the same for all types of abrasive blast media. Plastic media, steel shot, walnut shells, and glass beads are all disposed of as hazardous wastes (defined by the EPA extraction procedure (EP) toxicity test.) Several test results from 1986 showed that some of the waste samples failed the EP Toxicity Test while other samples did not fail. However, to be on the conservative side and to minimize the need for testing and separating waste drums, LEAD decided to dispose of all abrasive blast depainting waste as hazardous waste. Under its current contract (1988), LEAD pays a relatively inexpensive $0.18 per pound for disposal of its abrasive blast waste.

Chemical stripping waste disposal costs vary depending on the waste type category as defined by the 1988 Disposal Contract (14). Typical paint solvent waste cost $2.25 to $2.75/gal ($137/55 gallon drum) for disposal. Share rust inhibitor waste disposal costs are similar to the disposal cost for the paint solvents. 1,1,1 trichloroethane disposal cost is $1.40/gallon ($77/55 gallon drum).

Disposal Cost of Spent Media Generated from the Blasting of One Basket of 8V Engine Parts

Media Type	Disposal Cost (1988 $)
Plastic Media: (1.33 blast hrs x 4.9 lbs of waste per blast hr x $0.18 per lb of waste)	$1.17/basket
Walnut Shells: (0.97 blast hrs x 7.5 lbs of waste per blast hr x $0.18 per lb of waste)	$1.31/basket
Glass Beads: (1.29 blast hrs x 16.3 lbs of waste per blast hr x $0.18 per lb of waste)	$3.78/basket

Disposal Cost of Spent Stripper Generated from the Stripping of One Basket of Small Parts

Operation	Disposal Cost (1988 $)
Chemical Stripping: Aluminum parts (1000 gals per tank x 2 tank changes per yr x $2.50 per gal of waste)/(260 work days per yr x 8 baskets per day)	$2.40/basket
Chemical Stripping: Ferrous parts (1000 gals per tank x 2 tank changes per yr x 2.50 per gal/waste)/(260 work days per yr x 8 baskets per day)	$4.81/basket
Application of Rust Inhibitor: Ferrous parts (2000 gals per tank x 2 tank changes per yr x $2.50 per gal of waste)/(260 work days per yr x 16 baskets per day)	

10.2.4 Facility Costs

In this report four elements are included under facility costs: equipment, maintenance, energy, and wastewater treatment.

Equipment

The cost of equipment for both chemical stripping and abrasive blasting varies depending on the equipment size. Blast cabinet costs range from $5,000 to $15,000. Stainless steel chemical strip tanks equipped with ventilation systems range in price from approximately

$30,000 to $60,000 for a 1,000 to 3,000 gallon tank, respectively. Strip tanks are more expensive than blast cabinets, but they generally last longer.

Maintenance

No specific cost data was available at LEAD on associated maintenance costs for depainting equipment. Production Engineering estimated though, that relative to other costs associated with depainting, maintenance for blast operations is approximately equal to maintenance for chemical stripping operations.

Energy

Energy to operate the building's air compressor is the primary energy requirement for abrasive blasting. This requirement is small in comparison to chemical stripping energy requirements. Chemical stripping energy requirements include:

- Ventilation - Supply fans are needed to draw off hazardous fumes to prevent their escape into the work environment. The cost of ventilation is approximately equal to the cost of running the air compressor for abrasive blasting.

- Tank Heating - Ferrous paint removers, and rust inhibitors require bath temperatures of 160 to 200°F. Aluminum paint strippers are used at room temperature. The heating requirements cost $10,000/yr for an average size (1000 gal) dip tank. (LEAD's Production Engineering is now investigating a method of floating plastic balls on the solution surface to reduce heat loss.)

- Steam Generation - Boilers are used to generate steam and hot water used for cleaning the part after it has been chemically stripped. Specific costs associated with steam generation were not available at LEAD.

The energy costs for degreasing include heating the tank to 160-200°F, ventilating the tank and steam cleaning. These costs are the same for abrasive blasting and chemical stripping.

Wastewater Treatment

The water used in cleaning is directed to the on-site Industrial Wastewater Treatment Facility. The yearly operating cost for this facility is $150,000.

Production Engineering at LEAD estimates that 5 to 10% of the total wastewater flow is from water cleaning after chemical stripping. Some of that wastewater is generated during degreasing operations and the remainder is generated during the chemical stripping processes. The only water usage associated with abrasive blasting is during the

degreasing step prior to blasting. There are approximately 15 dip tanks associated with depainting, so the wastewater treatment cost per tank is only about $1,000 per year ($150,000 per year operating cost x 10% of wastewater flow divided by 15 tanks).

Total Facility Costs

Facility costs for all types of abrasive blasting are basically the same. A comparison of costs associated with abrasive blasting in a blast cabinet and chemical stripping in a dip tank are summarized below:

Facility Cost Comparison

Item	Abrasive Blasting	Chemical Stripping	Significant Cost Difference
Equipment	Blast Cabinet	Stripping Tank	None
Maintenance	Repairs and Parts	Repairs and Parts	None
Energy	Air Compressor	Ventilation Tank Heating Steam Generation	None $10,000/tank/yr Not Available
Wastewater Treatment	Water rinse after degreasing	Water rinse after degreasing and stripping	None

10.2.5 Total Depainting Cost Comparison for Small Parts

Table 10-3 gives an overall annual cost comparison for depainting (conventional paint) one basket of 8V engine parts using plastic media, walnut shells, glass beads and chemical stripping. This cost comparison does not include the degreasing process which is standard for all depainting of small parts. At LEAD 8V engine parts are not chemically stripped, but for comparison purposes in this analysis, one basket of 8V engine parts would be chemically stripped as two baskets; one basket of aluminum and one basket of ferrous parts.

Based on the cost comparison, chemical stripping is the most economical method for depainting small parts followed by walnut shell, plastic media, and glass bead blasting. Figure 10-1 shows the annual costs associated with the various depainting methods. Several assumptions and approximations had to be made in making the comparison so the difference in cost between the depainting methods may not be as significant as this comparison indicates.

The primary reason chemical stripping is the most cost effective method of depainting small parts is the large savings in labor costs ($73,000 for PMB vs. $25,000 for chemical stripping). For abrasive blasting,

TABLE 10-3

OVERALL ANNUAL COSTS FOR DEPAINTING A BASKET OF 8V ENGINE PARTS
(1988 $)

Cost Item	Quantity per Basket	Cost per Unit Quantity	Annual Cost[a] ($/yr)
Plastic Media Blasting			
Labor (Blasting)	2.53 hrs	$37/hr	73,000
Materials[b]	6.52 lbs	$1.41/lb	7,000
Waste Disposal[b]	6.52 lbs	$0.18/lb	1,000
Total			81,000
Walnut Shell Blasting			
Labor (Blasting)	2.18 hrs	$37/hr	63,000
Materials[b]	7.24 lbs	$0.20/lb	1,000
Waste Disposal[b]	7.24 lbs	$0.18/lb	1,000
Total			65,000
Glass Bead Blasting			
Labor (blasting)	2.50 hrs	$37/hr	72,000
Materials[b]	21.0 lbs	$0.31/lb	5,000
Waste Disposal[b]	21.0 lbs	$0.18/lb	3,000
Total			80,000

Source: Arthur D. Little, Inc.

TABLE 10-3 (Continued)

OVERALL ANNUAL COSTS FOR DEPAINTING A BASKET OF 8V ENGINE PARTS
(1988 $)

Cost Item	Quantity per Basket	Cost per Unit Quantity	Annual Cost[a] ($/yr)
Chemical Stripping Aluminum Parts			
Labor	0.46 hr	$34/hr	12,000
Materials[b]	0.48 gal	$7.84/gal	3,000
Waste Disposal[b]	0.96 gal	$2.50/gal	2,000
Sub Total			17,000
Chemical Stripping Ferrous Parts			
Labor[c]	0.48 hr	$34/hr	13,000
Materials[b] (paint stripper)	0.48 gal	$7.03/gal	3,000
Materials[d] (rust inhibitor)	0.29 gal	$4.71/gal	1,000
Waste Disposal[b] (paint stripper)	0.96 gal	$2.50/gal	2,000
Waste Disposal (rust inhibitor)[d]	0.96 gal	$2.50/gal	2,000
Facilities[e]	--	--	7,000
Subtotal			28,000
Total			45,000

(a) Based on 260 workdays/yr and 3 baskets depainted/day, or 780 baskets/yr.
(b) Materials and waste disposal values do not include degreasing operations.
(c) Includes two minutes for dipping in the rust inhibitor.
(d) 1.92 gal of rust inhibitor solution is removed through evaporation and carry-out losses.
(e) Includes only energy cost to heat the ferrous paint stripper and rust inhibitor tanks which is the only net difference in facility costs between abrasive blasting and chemical stripping. The annual cost is based on 3/8 of the energy costs for two tanks because 8 baskets can typically be processed per day.

Source: Arthur D. Little, Inc.

Figure 10-1
Annual Expenses For Depainting Small Parts

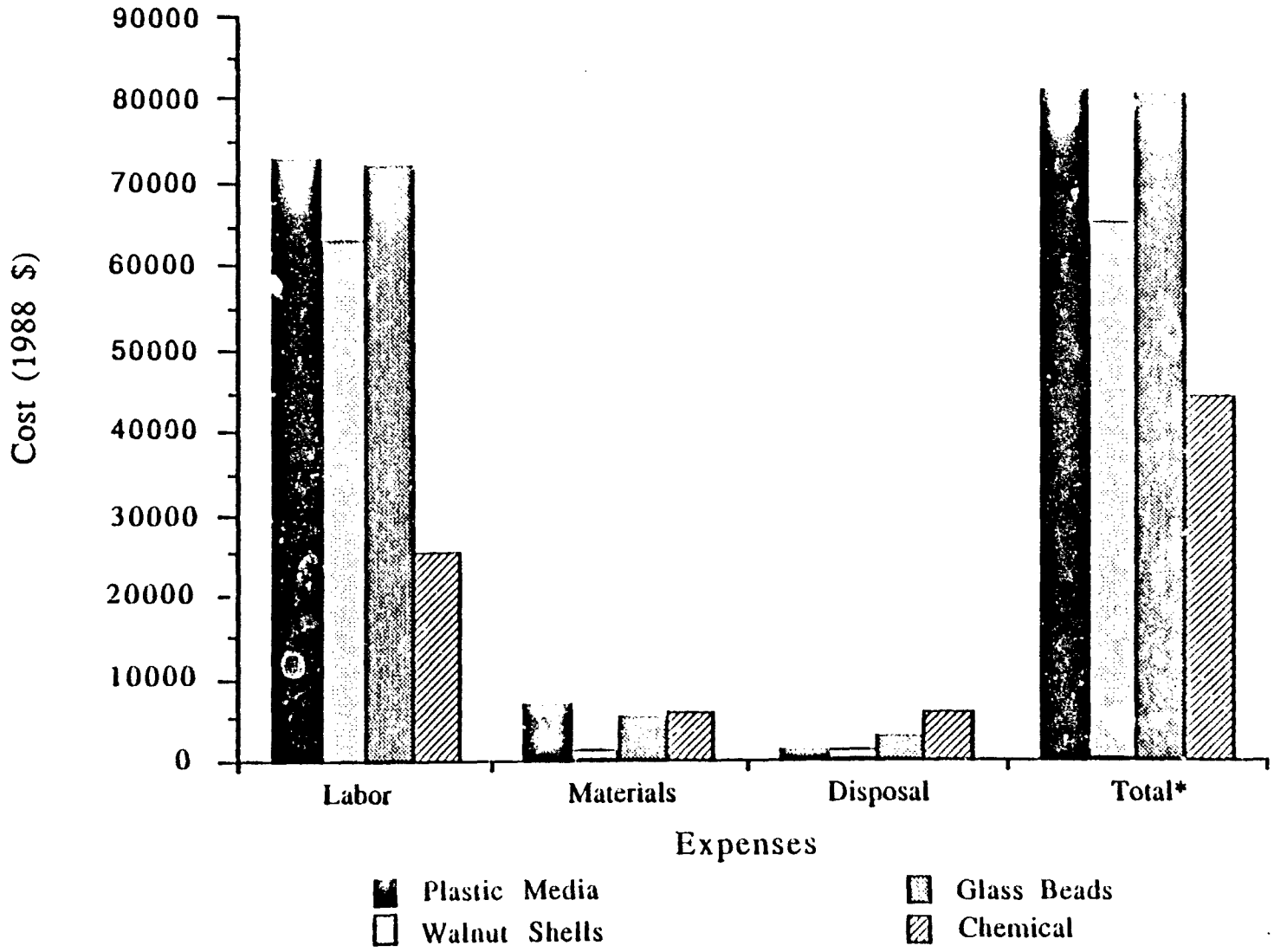

* For Chemical depainting, the total includes $7000 for additional facilities cost

Source: Arthur D. Little, Inc.

Arthur D Little

90% of the total cost is for labor. This percentage has to be reduced in order for blasting to be cost competitive with chemical stripping small parts; automated blast equipment may show considerable savings in this area.

10.3 Economic Evaluation of Large Equipment

In Test Series 4, large equipment was depainted in the walk-in blast room using three types of abrasive blast media; plastic media, walnut shells and a combination of 80% plastic media and 20% glass beads. At LEAD, chemical stripping is not used on larger equipment, because it is awkward to place the equipment in the dip tank, and spraying the chemical solution on the equipment is uneconomical, presents worker hazards, and generates large amounts of hazardous waste. Therefore, this phase of economic evaluation will not compare abrasive blasting to chemical stripping.

In order to simplify the economic evaluation of larger parts, comparisons will be made at a ventilation rate of 140-100 fpm and the optimum blast pressures for each media; 40 psi for plastic media, 80 psi for walnut shells and 40 psi for the combination of 80% plastic media/20% glass beads. Since 8V engine containers were the most frequently tested item in the test program, the economic evaluation will be based on that item.

10.3.1 Labor Costs

As described in Section 10.2.1, time allotments for depainting in the blast room are established by the depot's Work Measurement Group. The chores associated with depainting in the blast room are similar to the chores in the blast cabinet except the blast room has the extra chores of putting on and off the personal protective equipment (i.e., hood, gloves, air hose, air filter and apron), operating the hoist, disassembling equipment and additional walking in and around the blast booth.

As discussed in Section 9.1, the paint removal rates for blasting at the optimal pressures are approximately the same for each media. For this analysis, the paint removal rates for each media are assumed equal.

As listed in Table 10-2, the time allotment for blasting an 8V engine container is 3.17 hours. Based on our test results, each container required approximately two hours of actual blasting. The remainder of the time allotment should, therefore, be attributed to miscellaneous chores associated with blast room operations and the PFD factor. Since labor rates for blast operators are $37/hr, the cost to depaint one 8V engine container is $117.40 (3.17 hrs x $37/hr).

10.3.2 Material Cost

The material cost for depainting one 8V engine container for each type media at the optimum blast conditions is as follows:

Blast Media	Material Cost (1988 $)
Plastic media ($1.41/lb x 26 lbs/hr x 2 hr/unit)	$ 73.32/unit
Walnut Shells ($0.20/lb x 54 lb/hr x 2 hr/unit)	$ 21.60/unit
80% Plastic media/20% Glass beads ($1.41/lb x 26 lb/hr x 2 hr/unit x 0.8 + $0.31/lb x 26 lb/hr x 2 hr/unit x 0.2)	$ 61.38/unit

Prior to depainting, the large equipment is processed a variety of ways depending on the part. For instance, containers are steam cleaned and panels are degreased and/or chemically stripped. Since these processes will not change regardless of the abrasive blast media that is used, the pre-depainting processes are excluded from the economic analysis.

10.3.3 Waste Disposal Costs

Waste disposal costs for depainting an 8V container are as follows:

Blast Media	Disposal Cost (1988 $)
Plastic Media ($0.18/lb x 26 lbs/hr x 2 hrs/unit)	$ 9.36/unit
Walnut Shells ($0.18/lb x 54 lb/hr x 2 hrs/unit)	$19.44/unit
80% Plastic Media/20% Glass Beads ($0.18/lb x 26 lb/hr x 2 hrs/unit)	$ 9.36/unit

10.3.4 Facility Costs

Since all depainting of large containers is performed in the blast room, equipment and energy costs are the same for all medias. Walk-in blast room costs vary from approximately $30,000 for a 10'x10'x10' standard room with a manual media recovery system up to $90,000 for a 15'x12'x20' standard room with a fully automatic media recovery system. Additional items, such as HEPA filters or equipment for additional ventilation capacity, can significantly increase these costs. Energy costs related to blast room operations for PMB have been reported (1,2) to be 1-2% of the total operating costs. Since it is a dry abrasive blasting technique, there was no water or wastewater requirements. The only significant cost difference for the blast media was maintenance. As mentioned in Section 5.0, all the abrasive blast media wore holes in the rubber hoses throughout the system. In addition, the glass beads damaged the steel walls of the cyclone and the steel grates and screens

on the flooring. This damage to the blast room from using the plastic media/glass bead combination and the resulting maintenance cost adds approximately $5,000 to the yearly operating costs of the plastic media/glass bead combination.

10.3.5 Total Depainting Cost Comparison for Large Parts

Table 10-4 gives the overall annual costs for depainting 8V containers. This economic comparison is based on depainting 2.5 8V containers per shift with one shift operating per day, which would be the number of containers necessary to keep the room in operation for one year.

Based on this evaluation, walnut shell blasting is approximately 20% less expensive than blasting with either plastic media or the combination of plastic media/glass beads. Figure 10-2 shows the annual expenses associated with each blasting media.

This economic comparison was based on 8V containers with no rust. As mentioned previously, walnut shells and to a lesser extent, plastic media were not effective at removing rust. For rusted parts, depot personnel estimated that an additional one hour of hand sanding was required to remove rust from 8V containers that were walnut shell blasted. An additional 1/2 hour was required for containers that were plastic media blasted and no additional time was required when blasting with the plastic media/glass beads combination. The increased annual labor costs equal $24,000 ($37/hr x 1 hr/unit x 650 units/yr) for walnut shells and $12,000 ($37/h x .5 hr/unit x 650 units/yr) for plastic media. Consequently, for rusted equipment the total annual costs for walnut shell and plastic media/glass bead blasting are equivalent and plastic media blasting is only about 10% more expensive.

It is important to note that these costs reflect the current status of hazardous waste landfill regulations. As new regulations restricting landfilling of hazardous waste are phased in over the next 5 years, hazardous waste landfilling costs will likely rise substantially. In addition, it is possible that all wastes from depainting operations may be classified as hazardous. Such a regulation is under consideration in California. Rising waste disposal costs may become the controlling factor in selection of depainting processes in the future. Therefore, it is important to carefully consider current and projected future disposal costs in planning changes in current depainting facilities and future processing procedures. Also the regulatory changes described above and the related economic changes could even impact those blast operations where sand and sand substitutes are used extensively, such as Red River and Anniston, and make alternative depainting methods more competitive.

Likewise, future restrictions on the use of chemical strippers even in dip tanks due to worker exposure to fumes could also significantly impact the relative economics of the various depainting processes.

TABLE 10-4

OVERALL ANNUAL COSTS FOR DEPAINTING SV CONTAINERS
(1988 $)

Cost Item	Quantity per Unit	Cost per Unit Quantity	Annual Cost[a] ($/yr)
Plastic Media Blasting			
Labor[b]	3.17 hrs	$ 37/hr	76,000
Materials	52 lbs	$1.41/lb	48,000
Waste Disposal	52 lbs	$0.18/lb	6,000
TOTAL			130,000
Walnut Shell Blasting			
Labor[c]	3.17 hrs	$ 37/hr	76,000
Materials	108 lbs	$0.20/lb	14,000
Waste Disposal	108 lbs	$0.18 /lb	13,000
TOTAL			103,000
80% Plastic Media/ 20% Glass Beads			
Labor[d]	3.17 hrs	$ 37/hr	76,000
Materials (Plastic)	42 lbs	$1.41/lb	38,000
Materials (Glass)	10 lbs	$0.31/lb	2,000
Waste Disposal	52 lbs	$0.18/lb	6,000
Facilities[e]			5,000
TOTAL			127,000

(a) Based on depainting 650 units/year
(b) Does not include labor requirements associated with hand sanding for heavily rusted equipment; labor requirements associated with hand sanding would increase the annual labor cost to $88,000 and total PMB annual operating costs to $142,000.
(c) Does not include labor requirements associated with hand sanding for heavily rusted equipment; labor requirements associated with hand sanding would increase the annual labor cost to $100,000 and the total walnut shell annual operating cost to $127,000.
(d) No additional labor requirements are required for heavily rusted equipment.
(e) Denotes only the significant difference in facilities' costs between the three blast medias; glass beads are the most abrasive of all three medias shown.

Source: Arthur D. Little, Inc.

Figure 10-2
Annual Expenses For Depainting Large Parts

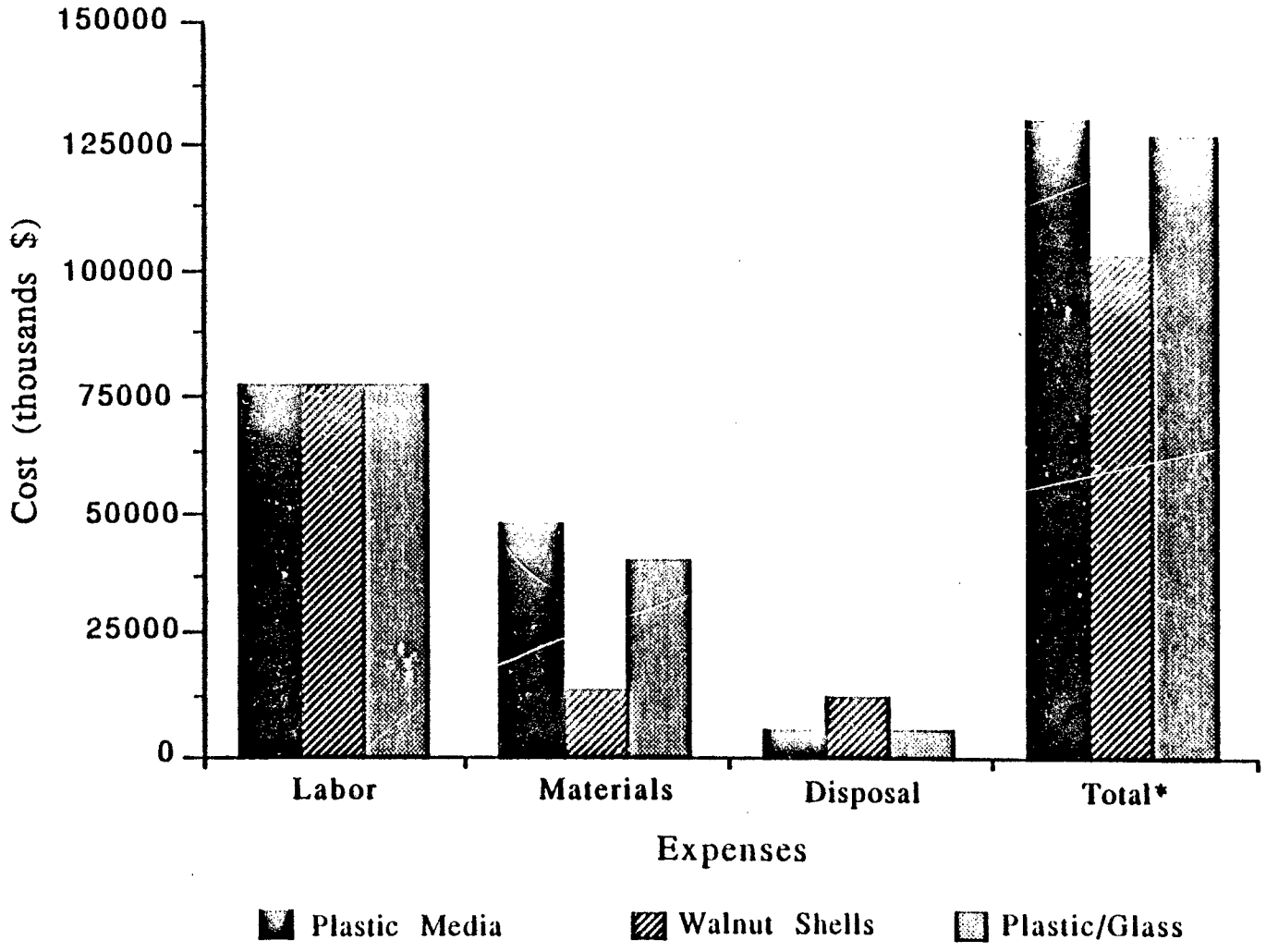

* For Plastic/Glass depainting, the total includes $5000 for additional facilities cost

Source: Arthur D. Little, Inc

11.0 AUTOMATED PMB EQUIPMENT AND ALTERNATIVE DEPAINTING METHODS

11.1 Automated PMB Equipment

In recent years significant effort has been devoted to the development of automated blast equipment to reduce labor requirements since abrasive blasting is labor intensive, and labor costs continue to escalate. In addition, if further regulations are imposed upon the use of methylene chloride dip tanks which are commonly used for the depainting of small parts, automated abrasive blast equipment for cleaning small parts may become particularly important. On the other hand, automated equipment has produced higher media consumption rates than manual systems because of the multiple nozzles and higher media flow rates and higher particle velocity typically used.

A wide variety of automated systems is now available, particularly for use with steel shot blasting. Many of these systems are being redesigned for use with PMB. The various types of automated PMB equipment, ranging from linear conveyor units to various types of rotating table units and tumble blast units, are described below. At present, significant effort is being applied to both the adaptation of current automated equipment and the design of totally new equipment for automated blast with plastic media.

11.1.1 Linear Conveyors

Linear conveyors are used for medium to large parts which can be mounted on a conveyor and carried through a cabinet or enclosure equipped with blast nozzles utilizing plastic media. The nozzles, in turn, may be mounted at various intervals and angles in order to ensure that the entire area of each part is thoroughly blasted as it moves. Frequently, these units are designed for a limited range of sizes and shapes of parts and are particularly well adapted to parts that have large surface areas on two sides. In some cases, the linear conveyors are cost-effective, even for relatively complex parts, in that they can be utilized to remove paint from a large percentage of the surface area of each part, with only small residual amounts of paint requiring removal in a manually operated blast cabinet or blast room.

For the overhaul of aircraft, for example, linear conveyors have been built and are being utilized for plastic media blasting of such parts as helicopter rotor blades and aircraft control surfaces. At the Red River Army Depot, the new consolidated maintenance facility included a very large automated blast system for personnel carrier hulls. This system was designed for blasting with stainless steel shot using centrifugal acceleration.

11.1.2 Rotating Table Units

A range of rotating table units are currently commercially available for use with steel shot and are being adapted for use with PMB. One type is the continuously moving table which operates with a portion of

a circular rotating table open and accessible to the operator and screened from the blast area by appropriate curtains and deflectors. The operator places parts to be blasted on the rotating table. As the table turns continuously, these parts pass under the curtain into the blast area. The parts on the table that are emerging from the blast area are either turned for blasting on the other side of the part or removed from the table if blasting has been completed. If the parts emerging are not completely cleaned, they can be left in place for another cycle or removed for manual touch up blasting to complete the paint removal.

11.1.3 Rotating Post Machines

There are also PMB machines available that have a series of rotating posts mounted on an indexing table. As each post indexes to the front of the machines, appropriate parts are mounted on or clamped to the rotating post. The table then indexes, moving the post into the blast area, where multiple nozzles blast the part or parts on the post while the post rotates. Frequently, the blast area has two to three blast stations with nozzles at different angles to ensure to the extent possible that all of the surface of each parts is completely blasted.

11.1.4 Tumble Blast Units

Various types of drum and belt tumble blast units are now available for use with PMB. In these units a number of small parts can be placed in an enclosure and tumbled while they are blasted by a series of nozzles. These units are limited to parts that will not be damaged by the tumbling action of the blast unit. As was previously noted, these units may be particularly desirable should it be necessary to find an alternative to methylene chloride stripper tank cleaning.

11.1.5 Centrifugal PMB Blasting

Centrifugal, rather than compressed air acceleration of the media, is commonly used in automated equipment for blasting with highly durable media such as steel shot and grit. In comparison with air blast acceleration, mechanical centrifugal acceleration is much more energy efficient. In addition, large volumes of media can be accelerated to provide rapid paint removal and cleaning. Early attempts to utilize centrifugal equipment with plastic media were unsuccessful due to high media consumption rates. More recently, several companies have been focusing on the design and fabrication of special equipment to centrifugally accelerate the plastic media in an efficient and cost-effective manner. Schlick, a German company represented in the U.S. by Schlick America, Inc., has been particularly aggressive in development of such equipment. Schlick was involved in some of the earliest plastic media development work several years ago. They have worked closely with MBB (formerly Messerschmidt) in Germany to develop PMB for aircraft applications. The key element is a special high efficiency turbine centrifugal acceleration unit. It is claimed that these unit can achieve high mass flow rates of plastic media on to the

surfaces to be depainted while at the same time minimizing media degradation and achieving a recycle rate of about 90 to 95 percent. One application of these Schlick rotoblast units is in an automated helicopter rotor blade depainting facility in France.

Hill Air Force Base has installed a conveyorized PMB unit for depainting certain fighter aircraft flight control surfaces. This unit reportedly utilizes U.S. made centrifugal PMB equipment.

Because of the reported energy efficiency and rapid depainting rates with minimum media degradation, specially designed centrifugal equipment may prove to be particularly desirable for various types of automated PMB equipment.

11.2 Alternative Depainting Methods

There are several alternative depainting methods that are in various stages of development. In some cases, these are potential competitors to PMB and conventional depainting methods, but it is possible that a combination of some of these techniques such as xenon flash lamp, laser or thermal degradation might be used in conjunction with PMB to achieve the most cost-effective results. Each of these new alternative techniques is described below. Initial assessments as to whether these may in the future displace PMB or be used to effectively complement PMB are discussed.

11.2.1 Xenon Flash Lamp

The xenon flash lamp system (15, 16) has been developed to an initial feasibility demonstration stage on aircraft parts by the Air Force at McClellen AFB. In this process, the xenon flash lamp produces intense photo radiation of the paint to cause degradation. To automate the system, concepts have been developed for robotization of the movement of the flash lamp to follow the complex contours of the aircraft. The capital cost of the flash lamp system and the automation equipment would be high. Although no adverse effects on substrates have been identified to date, the possibility of damage exists and therefore needs further study. Clearly, the xenon flash lamp does not represent a near-term alternative to PMB. If and when the system is fully developed, it could represent an alternative depainting method. Also, it is possible that PMB would be used for final cleaning following initial degradation of the paint with the flash lamp.

11.2.2 Laser Depainting

Several companies are actively studying the use of various configurations of lasers as a paint removal devices. These studies indicate that laser paint stripping can be accomplished by directing the laser energy onto the coating surface. Polyurethane top coats (such as CARC paint systems), although resistant to most mechanical depainting approaches, are quite susceptible to laser degradation.

Various laser depainting concepts are currently being further investigated under sponsorship or with the cooperation of the Air Force Materials Laboratory at Wright Patterson AFB. Some of these systems include high levels of automation, not only to move the laser but also to analyze infrared radiation from the surface to assess the degree of paint degradation and use the feedback to control the laser to achieve full degradation.

The use of lasers will involve high capital costs, not only because of the cost of the laser but also the sophisticated control system that would be needed for automatic operation to assure that the substrates from which the paint is being removed are not damaged by the laser. As with the xenon flash lamp system, it is possible that lasers might be used to degrade the paint which would then be removed with abrasive blasting.

11.2.3 Carbon Dioxide Pellet Blasting

Carbon dioxide pellet blasting is used primarily for the removal of many types of surface contaminants including: grease, tars, dirt, asphalts, and various chemical residues. In this technique, liquified carbon dioxide is allowed to flash into snow-type crystals. The snow is then compressed and extruded to the pellet size desired, typically 1/8 inch in diameter and 1/8 inch in length. The pellets are produced at a temperature of about -100°F. These pellets are then blasted onto the surface to be cleaned at pressures up to 250 psig. Upon impact the pellets vaporize, leaving only the removed surface contaminants as waste. There are several theories as to how the removal process occurs: 1) purely impact, 2) purely by embrittlement, and 3) a combination of impact and embrittlement.

Several companies are active in the field of carbon dioxide pellet blasting including Lockheed Aeronautical Systems Company, Burbank, CA, Airco Industrial Gases, Murray Hill, NJ, and Liquid Carbonic Inc, Chicago, Il. The testing that has been done to date indicates that these systems are not aggressive enough to effectively remove polyurethane aircraft paints due to the flexibility, toughness and abrasion resistant impact absorbing qualities of the topcoats. It is likely that these same difficulties would occur when blasting CARC paint systems utilized by the Army. There is also the possibility of damage to substrates from the extreme temperature gradients that are created. Therefore, carbon dioxide pellet blasting does not represent a viable alternative depainting technique at the present time.

11.2.4 Thermal Degradation Techniques

Thermal techniques utilize heat to degrade the paint film. A subsequent mechanical operation, such as brushing or blasting, is required to complete the removal of residual char and pigments.

A primary advantage of the high-temperature air bake and other thermal techniques is the fact that they not only degrade the paint, but also remove grease and oil, thus eliminating the degreasing step prior to depainting. The primary disadvantage is that the high temperatures normally used (800-1000°F) exceed the allowable temperature for many aluminum and heat treated steel parts. A recent analysis by LEAD personnel indicated that less than 50% of the small to medium size parts currently being depainted could be safely subjected to these temperatures.

A combination of thermal degradation and PMB for parts depainting might be a very effective system. The heating might be performed at levels low enough to prevent any substrate damage, but high enough to sufficiently embrittle the paint that it could be quickly removed. Thermal treatment studies would be needed to determine whether there is an intermediate temperature that would degrease and embrittle the paint, yet not damage any substrates.

Molten Salt Bath

The molten salt bath is one of the thermal degradation techniques currently being investigated at some of the Army depots. Parts for depainting are placed in a molten salt bath which thermally decomposes and blisters the paint so it can be easily removed. Current indications are that this type of thermal degradation is limited to parts that can withstand temperatures of 700 to 900°F. One advantage of the salt bath over air heating is better temperature control which reduces the possibility of substrate damage. Of course, the substrates must be able to withstand the effects of the molten salt. For certain types of parts, the molten salt bath could be competitive with PMB or possibly even complementary to PMB in the near future.

High-temperature Air Bake

Several companies, including Air Products and Chemicals Co. (Allentown, PA) and Pollution Control Products Co. (Dallas, TX) are promoting simple high-temperature air bake equipment for use in depainting. In these systems, the small parts to be depainted are loaded into a temperature controlled oven in baskets and raised to a temperature in the range of 500° to 1200°F, depending on the particular paint to be removed and the temperature limitations of the substrate. After the oven comes to temperature, the parts are heated for an appropriate time, usually several hours, to pyrolyze the organic resin coating. The manufacturers place some limitations on the types of coatings and materiels that can be placed in the oven for pyrolysis. Generally, there is a restriction against materiels that contain chlorine or other halogens in the structure of the paint, because of the highly corrosive nature of the degradation products. Also, any lack of temperature uniformity in the oven may pose problems for more temperature sensitive substrates. To date, however, manufacturers claim that no such difficulties resulting from non-uniform temperatures have been reported. Recently, Tooele Army Depot has installed this type of air-circulating oven for evaluation.

Thermal baking appears to have excellent potential for use in conjunction with PMB as an effective depainting procedure, but further studies are needed to determine the economics and effectiveness of such a dual system.

Fluidized Bed Thermal Degradation

LEAD is currently evaluating the use of fluidized beds as a thermal degradation technique. The fluidized medium is aluminum oxide or a similar materiel which provides good heat transfer to the parts that are being depainted. The fluidized bed system provides improved control of the temperature at which the parts are depainted and thermally degrades the paint more rapidly than the Air Bake method. However, the size of the fluidized bed limits the number of parts that can be depainted simultaneously. These beds represent a significant capital investment, and increasing the size of the fluidized bed increases costs significantly.

11.2.5 Water Jet Blasting

Several companies such as Tracor Hydronautics (Laurel, MD) and ADMAC (Kent, WA) have been experimenting with the use of water jet blasting for depainting. Water jet removal of conventional paint systems has been demonstrated, and claims have been made that polyurethane systems can be removed also. There are a variety of systems using continuous fine jets, pulsed jets and additives such as fine abrasives in the water jet. One advantage of this system is the small amount of waste generated. The paint chips are easily separated from the water by settling and filtration and the water can be recycled. Disadvantages are high energy requirements and flash rusting of ferrous equipment after depainting. Overall, this technology is in a relatively early stage of development. It might eventually be an alternative to PMB, but practical use appears to be several years in the future.

12.0 CORROSION REMOVAL

Abrasive blasting removes corrosion to varying degrees depending on the type of media used. In order to comply with the depot work orders, which specify to what extent corrosion must be removed, the depot personnel must understand the corrosion cutting limitations of the blast medias.

For each depainting work order at the depot, the degree of surface cleaning and corrosion removal of hot-rolled steel is specified by referencing Steel Structures Painting Council Surface Preparation (SSPC-SP) standards (17). These specifications define levels of corrosion and corrosion removal. According to the surface preparation standards, there are four grades of rust (A-D) as defined below:

- A - Steel surface covered completely with adherent mill scale and with little, if any, rust.

- B - Steel surface which has begun to rust and from which the mill scale has begun to flake.

- C - Steel surface on which the mill scale has rusted away or from which it can be scraped, but with little pitting visible to the naked eye.

- D - Steel surface on which the mill scale has rusted away and on which considerable pitting is visible to the naked eye.

The written specifications for corrosion are supplemented by SSPC-Vis 1, Pictorial Surface Preparation Standards (18). These color prints are used as a guide to help interpret the written specifications. Figures 12-1 and 12-2 from the SSPC-Vis 1 specifications illustrates the four grades of rust.

The equipment being overhauled is typically used for about five years in the field before returning to the depot for repair, and most of the corrosion on the equipment is grade B rust. In certain areas where the metal is exposed to particularly corrosive environments, corrosion reaches grade C. Type A rust is encountered, but is not considered a problem. At LEAD Type D rust is almost never encountered and when it is, the equipment part is usually scrapped. Therefore, grades B and C rust are of the most concern in depot operations.

The degree of blast cleaning is also defined by the Steel Structures Painting Council and is broken down into preparation grades. Four of these standards are as follows:

- Sa 1 (SSPC-SP7) - Light blast cleaning. Loose mill scale, rust and foreign matter (i.e., oil, grease, dirt, and rust) shall be removed.

- Sa 2 (SSPC-SP6) - Thorough blast cleaning. Almost all mill scale, rust and foreign matter shall be removed.

FIGURE 12-1

SSPC-VIS 1 RUST GRADE SPECIFICATIONS (A and B)

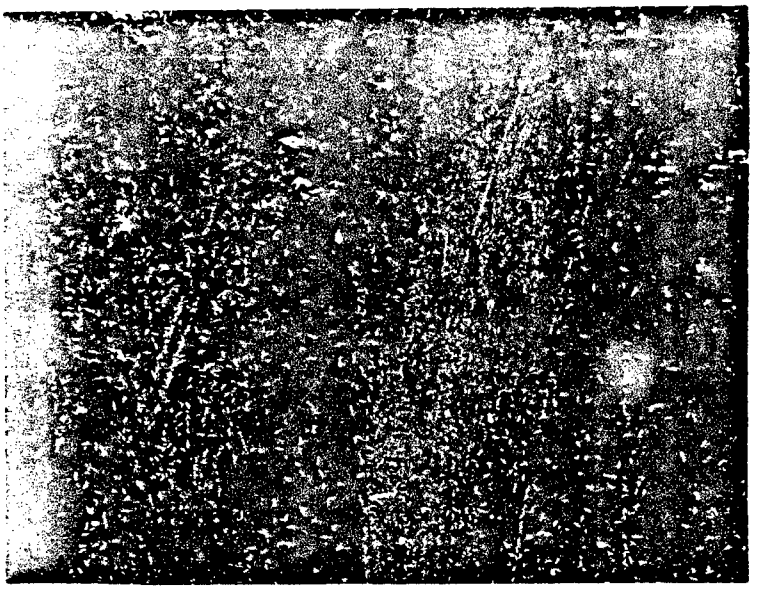

GRADE A

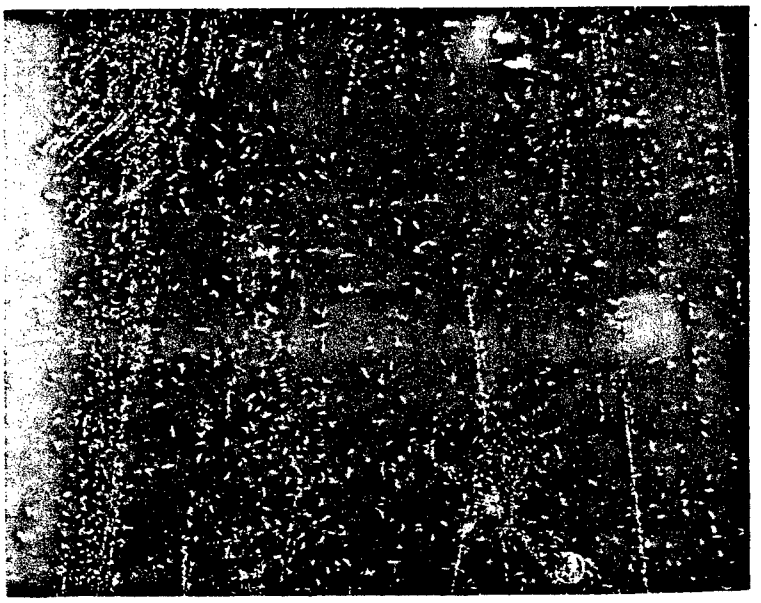

GRADE B

Source: Reference 18

FIGURE 12-2

SSPC-VIS 1 RUST GRADE SPECIFICATIONS (C and D)

GRADE C

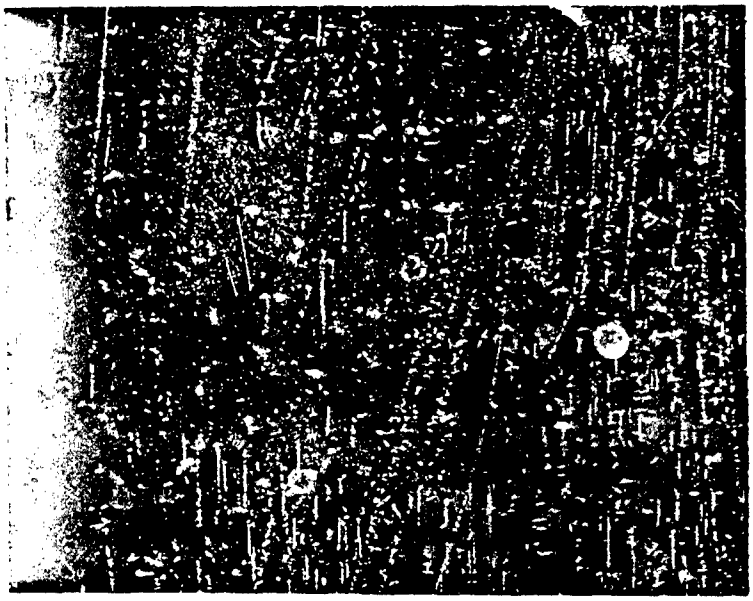

GRADE D

Source: Reference 18

- Sa 2½ (SSPC-SP10) - Very thorough blast cleaning. Mill scale, rust and foreign matter shall be removed to the extent that the only traces remaining are slight stains in the form of spots or stripes.

- Sa 3 (SSPC-SP5) - Blast cleaning to pure metal. Mill scale, rust and foreign matter shall be removed completely.

At LEAD most work orders require Sa 2 blast cleaning.

The rust grade and the blast cleaning surface preparation grade are then combined and pictorial standards are available for every combination of rust grade and preparation grade. For example, a steel surface originally corresponding to rust grade B, which has been prepared by blast cleaning to preparation grade Sa 2 is designated B Sa 2. The SSPC-Vis 1 color print associated with B Sa 2 is shown in Figure 12-3.

The degree of blast cleaning is controlled by the type of abrasive blast used. Plastic media, a relatively soft media (3.0 to 4.0 mohs), is effective at removing loose surface rust and all foreign matter as required by Sa 1, but it cannot remove the deep pitted rust as required by Sa 2½ and Sa 3. Whether or not plastic media can achieve Sa 2 standards is less clear. This depends on the degree of initial rust, the thoroughness of blasting, and the opinion of the quality control inspector. Blast pressure does not affect the medias' capacity to remove rust. Figure 12-4 show parts with grades B and C rust before and after plastic media blasting.

Walnut shells (2.5 to 3.0 mohs) are softer than plastic media and can achieve only Sa 1 blast cleaning. Glass beads are harder than plastic media (5.5 mohs) and can achieve Sa 2½ and possibly Sa 3 surface preparation, assuming the blast operator is thorough during depainting. A combination of plastic media with 20% glass beads can achieve Sa 2 standards. This combination could probably reach SA 2½ and SA 3, but the necessary dwell time during blasting would greatly increase the depainting time. Consequently, if Sa 2½ or Sa 3 standards are required, a more abrasive media, such as steel shot is recommended. Table 12-1 lists the degree of rust removal which is possible with each media.

The rust removal issue emphasizes the need for several abrasive blasting operations at each depot. The depainting requirements vary depending on the equipment being processes and no one type of abrasive media works best for every situation. For instance, the plastic media is effective at removing paint and surface rust, but it cannot remove deep pitted rust. So although plastic media can be used for many applications systems, harder media should also be available at the depot to remove the deeper rust. If facilities are available using walnut shells, plastic media, and glass beads or steel shot, then all blasting requirements can be met, including rust removal.

FIGURE 12-3

SSPC-VIS 1 BLAST CLEANING PREPARATION STANDARD B Sa 2

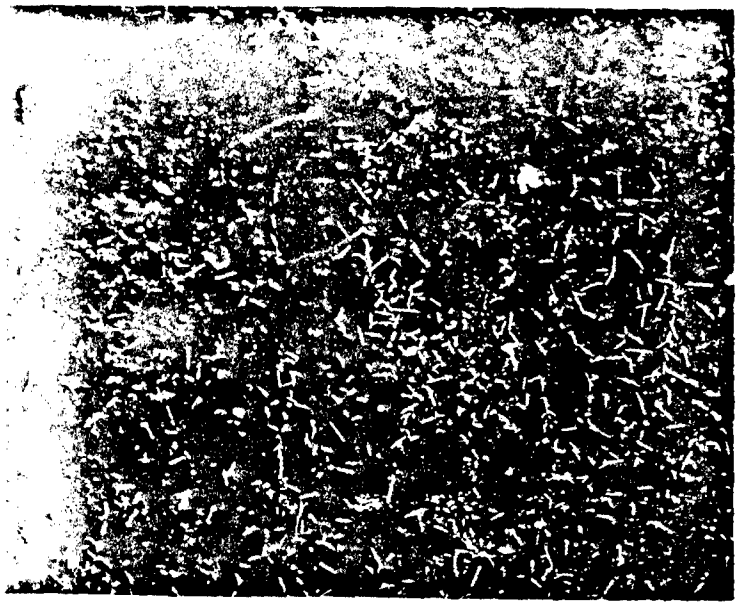

GRADE B Sa 2

Source: Reference 18

FIGURE 12-4

GRADES B AND C RUST BEFORE AND AFTER PMB

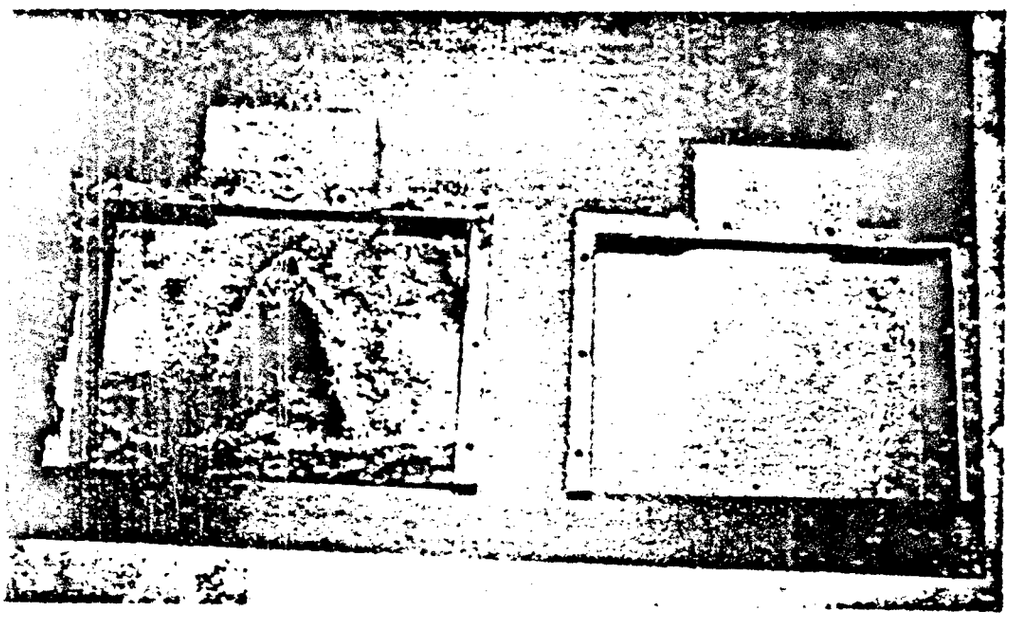

GRADE B RUST BEFORE AND AFTER PMB

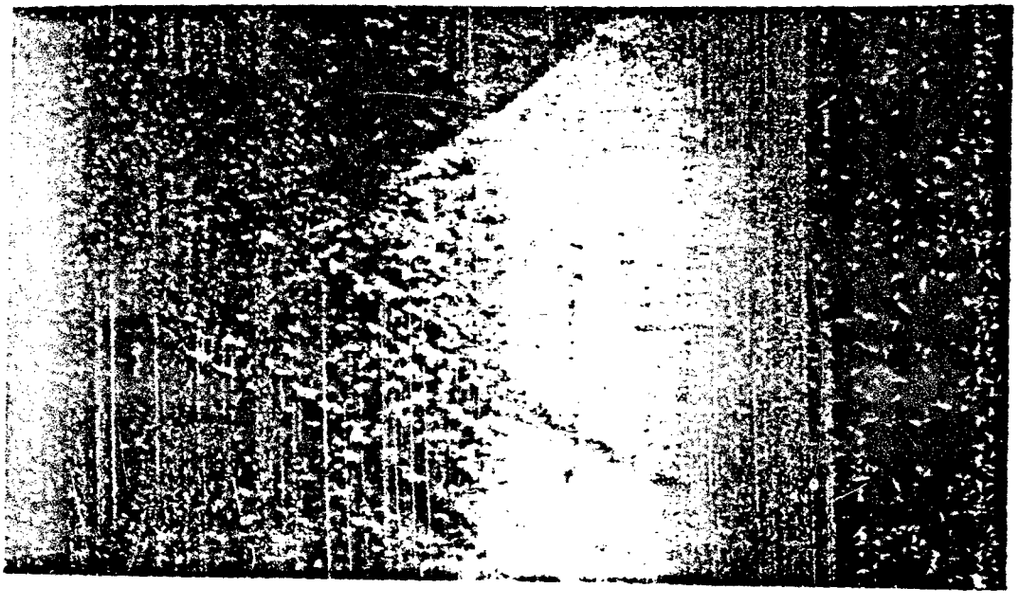

GRADE C RUST BEFORE AND AFTER PMB

Source: Arthur D. Little, Inc.

Table 12-1

Rust Removal for Abrasive Blast Media

	Sa 1	Sa 2	Sa 2½	Sa 3
Plastic Media	Yes	Yes-No	No	No
Walnut Shells	Yes	No	No	No
Glass Beads	Yes	Yes	Yes	Yes-No
Plastic Media/ Glass Beads	Yes	Yes	Yes-No	Yes-No

Yes - the surface preparation standard can be met with this media.

No - the surface preparation standard cannot be met with this media.

Yes-No - the standard can be met some of the time

Source: Arthur D. Little, Inc. based on qualitative results of test program.

13.0 CONCLUSIONS AND RECOMMENDATIONS

13.1 Conclusions

13.1.1 PMB Performance

PMB effectively removed conventional paint coatings on all shapes, sizes and materials of construction tested. Test results did not conclusively indicate that one single brand of plastic media performed (based on paint removal and media consumption) better than all others. Test results did show, however, that for Army depot use, plastic media with a 3.5 to 4.0 moh hardness rating and a 20 to 40 U.S. sieve size achieved the best combination of paint removal and media consumption (waste generation) rates.

In the blast cabinet, at the optimum blast pressure for each depainting method, PMB (at 30 psi) generated an average of 70% less waste than glass beads (at 45 psi) and 40% less waste than walnut shells (at 45 psi). The average paint removal rate achieved with walnut shells was 40% higher than that of plastic media or glass beads.

In the blast room, PMB produced approximately the same paint removal rate at 40, 50 and 60 psi blast pressures. Media consumption rates were the lowest (25 lb/hr) at 40 psi. Walnut shell blasting had approximately 50% better paint removal rates at 80 psi than at either 70 or 50 psi. A combination of 80% plastic media and 20% glass beads worked effectively at 40 psi. Therefore the optimum blast pressures in the blast room were identified as: 40 psi for plastic media, 80 psi for walnut shells, and 40 psi for the plastic media/glass beads combination.

In the blast room the average paint removal rate achieved when blasting with walnut shells at 80 psi was approximately the same as PMB at 40 psi. Yet PMB generated 50% less waste than walnut shell blasting. When the plastic media/glass beads combination (at 40 psi) was used, the average paint removal rate was 30% lower than the rates achieved when using plastic media or walnut shells. However, this combination of media removed surface rust and corrosion which plastic media or walnut shells alone did not do. The plastic media/glass beads combination did not lead to an increase in media consumption and like plastic media alone, generated 50% less waste than walnut shells.

Plastic media, walnut shell and glass bead blasting and chemical stripping were also evaluated using the following qualitative evaluation criteria:

- post blasting part appearance;
- anchor pattern;
- rust and gasket removal;
- substrate warping and pitting;
- dust generation;

- adhesion of residual media and resulting blowoff and/or welding difficulties;
- blast system equipment wear; and
- operator ease.

Based on discussions with plant operators and engineers, this evaluation showed that overall, PMB was the preferred depainting method.

In the blast room, plastic media, walnut shells and the plastic media/glass beads combination all effectively removed Chemical Agent Resistant Coatings (CARC). CARC removal required approximately 1.5 to 2.0 times the length of time required for conventional paint removal. Preliminary discussions with depot personnel indicated that chemical stripping was not effective at removing CARC.

Corrosion removal was evaluated for each media: glass beads alone and the plastic media/glass bead combination adequately removed all corrosion. Plastic media removed loose surface rust but not the deeply pitted corrosion. Walnut shells adequately removed most loose surface rust. However, rusted equipment which were blasted with walnut shells were often rejected by quality control inspectors.

Plastic media was effective at roughening the surface of new unpainted steel panels and parts to provide the anchor pattern desired for subsequent painting.

PMB was effective at removing paint and not delaminating, warping or pitting delicate substrates, such as thin aluminum, fiberglass, brass and copper. PMB effectively depainted several specialty items such as S250 shelters, M578 aluminum engine covers, and 175 mm projectiles.

13.1.2 Optimum PMB Blast Parameters

The following blast conditions optimized PMB performance in the blast cabinet: 30 to 40 psi blast pressure; 6 to 10 inch blast standoff distance; and 4 to 5 lb/min media flow rate. Optimum blast conditions for the walk-in blast room were: 40 psi blast pressure, 18 to 30 inch blast stand off distance and 6 to 9 lb/min media flow rate.

13.1.3 PMB Economics

Based on an economic comparison of depainting methods for small equipment parts using an abrasive blast waste disposal cost of $0.18/lb ($360/ton), chemical stripping was the least expensive depainting method followed by walnut shell, glass bead and plastic media blasting, respectively. Labor requirements are considerably higher for abrasive blasting in comparison to chemical stripping and consequently abrasive blasting exhibits higher operating costs. Automated blast equipment, however, shows potential to reduce labor costs for abrasive blasting and thus make it more competitive with chemical stripping. A trade-off exists, though since higher media consumption rates have been reported for some automated systems.

An economic comparison of depainting methods for large equipment parts depainted in the walk-in blast room showed that walnut shell blasting was less expensive than either PMB or blasting with the plastic media/glass bead combination. The higher cost of plastic media ($1.40/lb plastic media vs. $0.20/lb walnut shells) was the major factor in the higher operating costs.

13.1.4 PMB Data Base

In addition to the previously discussed description of PMB performance, optimum blast parameters and economics, the following information regarding PMB was developed during the demonstration test program and should also be a part of the PMB data base.

Key process variables which affect PMB paint removal efficiency were identified. These variables include:

- part size and shape complexity;
- length of degreasing time (prior to blasting);
- amount of residual grit, grease, and gasket material;
- paint type, thickness, and extent of blistering; and
- operator technique and efficiency.

In the walk-in blast room, whether blasting with plastic media, walnut shells, or the plastic media/glass beads combination, paint removal rates varied widely depending on equipment size, shape and complexity. Highest paint removal rates were achieved when blasting large flat surfaces such as containers and water tanks; lower rates were achieved on smaller more complex parts.

Tests showed that excessively high ventilation rates in the blast room increase media consumption and should be avoided. The lowest average media consumption rate (25 lb/hr) was achieved at a 100 linear feet per minute (fpm) blast room ventilation rate and at 40 psi blast pressure. At the higher 250 fpm ventilation rate in the blast room as originally installed, recyclable media was carried directly to waste through the ventilation system and consumption rates were 40% higher (35 lb/hr).

Various types of alternative depainting methods such as: xenon flash lamp, laser, carbon dioxide pellet blasting, thermal degradation and water jet blasting were reviewed. Among these alternative depainting methods, the thermal degradation techniques showed the most immediate promise as an efficient and economic alternative depainting method.

It is important to note, however, that the field of depainting is rapidly changing. For example, new and more efficient plastic media and PMB equipment are currently being developed. Test methods to determine whether a solid waste is hazardous are being modified. Federal regulations governing the disposal of hazardous wastes are becoming stricter, making hazardous waste disposal more difficult and consequently more costly. Concerns are being expressed about worker exposure to vapors from chemical stripping tanks, and these concerns

may lead to restrictive regulations. In addition, various new alternative depainting methods are under development. Consequently, this report presents the current state of information concerning PMB in a very dynamic industry.

13.2 Recommendations

The following recommendations are made with the primary purpose to increase the understanding of PMB and to improve depainting operations in the Army Depot System.

(1) With the data in this report, it should be possible to assess the viability of using PMB at most Army installations. Some small scale depot-specific testing of unique parts may be necessary before specific processes are converted to PMB.

(2) Operator training workshops are needed to instruct the depot personnel on proper blast system operation. Proper operation of the blast system and recycle system are essential to the efficient and economic use of PMB. Following the operator training workshops, the depot Production Engineering departments should continue to oversee and ensure proper blast system operation.

(3) A depainting clearing house should be established within the Army Depot System. This clearing house should have four main objectives. The first would be to stay abreast of the dynamic technical and regulatory factors affecting depainting operations. The second would be to maintain a data base of information on PMB that would be easily accessible to depot personnel. The third objective would be to provide a communication link to ensure technology transfer between depots. The fourth objective would be to provide technical support services to depot personnel during the purchasing and installation of PMB equipment. The number of depainting options are increasing and depot engineers need up-to-date information and data in order to optimize depot depainting operations in accordance with each of their specific needs.

(4) A similar test program, to determine paint removal and media consumption rates and labor requirements is needed for automated PMB. Based on current economics, labor requirements for the manual abrasive blasting of small parts preclude it from being a cost effective alternative to chemical stripping. However, automated blast equipment should reduce depainting labor requirements and associated labor costs such that automated PMB becomes more cost effective and competitive with chemical stripping.

14.0 REFERENCES

1. "Plastic Media Blasting Data Gathering Study," Final Report CR 87.006, Naval Civil Engineering Laboratory, Port Hueneme, CA, December 1986.

2. "Economic Analysis for Recycling Plastic Media," Final Report CR 87.001, Naval Civil Engineering Laboratory, Port Hueneme, CA, February 1987.

3. "Plastic Media Blasting: Summary of Current Activities," Vol. 1, Accurex Corp EPA Contract No. 68-02-3993, WA-12, January 1986.

4. "Paint Stripping of F-4 Aircraft and Component Parts using Mechanical Method PRAM," Project 00-143, Final Report, Aircraft Division, Directorate of Maintenance, Ogden Air Logistics Center, Hill Air Force Base, VT, 38 August 1986.

5. "Implementation of Plastic Media Blasting (PMB) at U.S. Army Depots," Arthur D. Little, Inc., USATHAMA reference AMXTH-TE-CR-87120, January 1988.

6. 29 CFR 1910.1000, Occupational Health and Safety Act, Table Z2.

7. 29 CFR Chapter XVII, Subpart G, Section 1910.94.a(2)iii.

8. "Plastic Bead Blast Materials Characterization Study," Battelle Columbus Division, for Air Force Corrosion Program Managers Office, July 1986.

9. "Plastic Bead Blast Materials Characterization Study Follow-On Report," Battelle Columbus Division, October 86 - August 87.

10. "Plastic Media, For Removal Of Organic Coatings," Military Specification, MIL-P-8589/(AS), May 1988, Project No. 5350-N008.

11. Personal Communication, Mr. Craig C. Fring, Empire Abrasive Equipment Corporation, Longhorne, PA, 1986

12. "Letterkenny Army Depot Hazardous Waste Minimization Plan," Robert Holt, Letterkenny Army Depot, 1986.

13. "DESCOM Hazardous Waste Questionnaire, Inter Depot Corr spondence," Letterkenny Army Depot, June 13, 1988.

14. 1988 Waste Disposal Contract, Defense Reutilization & Marketing Service, Contract No. DLA200-88-D-0015, February 1988.

15. "Flashblast - The Light That Cleans," Tom Johnson, Popular Science, p.82 ff, July 1982.

16. "Flashlamp Depainting System," Final Report, USAF PRAM Program, Project 82-5, Sacramento Air Logistics Center, McClellan Air Force Base, CA, July 1986.

17. "Surface Preparation Specification, No 5-10," Steel Structures Painting Council, Pittsburgh, PA, August 1988.

18. "Pictorial Surface Preparation Standards for Painting Steel Surfaces" Steel Structures Painting Council, Pittsburgh, PA.

APPENDICES

- A Operating Procedures for PMB Test Program
- B Equipment Parts Depainted During Test Series 1, 2, 3 and 4
- C Instrument Operating Instructions
- D Part Specifications and Surface Area Calculations
- E Results of Media Flow Rate Tests

APPENDIX A

OPERATING PROCEDURES FOR PMB TEST PROGRAM

- A.1 Blast Cabinet Operating Procedure
- Figure A-1 Schematic of Blast Cabinet
- A.2 Walk-in Blast Room Operating Procedure
- Figure A-2 Schematic of Walk-in Blast Room

OPERATING PROCEDURE FOR PMB TEST PROGRAM

A.1 Blast Cabinet Operating Procedure, Test Series I, II, and III

See Figure A.1 for blast cabinet system schematic.

1) Empty blast cabinet of leftover media:

   - Close ball valve C.

   - Step on foot treadle F and blast media.

   - If a significant amount of media exits nozzle, empty system according to procedure outlined in Step 5 below.

   - Any media collected should be weighed. Record weight in Media Log Book for previous day.

2) Add media to blast cabinet system:

   - Open feed hopper door.

   - Weigh approximately 10,000 grams (20 pounds) of media and record weight in Media Log Book.

   - Add media to feed hopper.

   - Close feed hopper door.

3) Set up time clock:

   - Set time clock to 0:00.

   - Place toggle switch under foot treadle F, so that toggle switch is activated when foot treadle is depressed.

   - Plug clock into toggle switch outlet.

   - Plug toggle switch plug into electrical outlet.

4) Prepare test parts for blasting:

   - Measure paint thickness of aluminum parts using a Minitector 150 Thickness Gauge (see Appendix B for operating instructions).

   - Measure paint thickness of steel parts using an Inspector Thickness Gauge (see Appendix B for operating instructions).

   - Record name and paint thickness for each part in Parts Log Book.

   - Inspect parts for blistering and record information under "Paint Condition" in Parts Log Book.

   - Place test parts in blast cabinet.

5) Run media flow rate test:

- Prepare two smoke generator toolboxes according to Step 4 and place toolboxes in blast cabinet.

- Set media flow valve D to proper screw setting by adjusting the T handle. Record screw setting in Laboratory Notebook.

- Open ball valve C.

- Record blast parameters (air pressure, nozzle distance, nozzle angle, and nozzle size) in Media Log Book.

- Depress foot treadle and begin blasting toolboxes, one at a time.

- Immediately check that pressure setting is correct. If it is not, adjust pressure regulator B.

- Continue blasting toolboxes until media flow stops. DO NOT RELEASE FOOT TREADLE DURING FLOW RATE TEST. If foot treadle is released, recycled media will be added to pressure pot and flow rate test results will be inaccurate. It may be possible to depaint more than one toolbox during a flow rate test. As it is essential <u>not</u> to release foot treadle during test, make a mental note of finish time for first tool box and record finish time in Parts Log Book when flow rate test is completed.

- When media stops flowing out of blast nozzle, remove foot from foot treadle and record finish time of flow rate test.

- Convert weights to English units and calculate flow rate as follows:

$$\frac{\text{Pounds (lbs) of media added}}{\text{minutes (min) of test run time}} = \text{media flow rate (lb/min)}$$

6) Repeat Media Flow Rate Test:

- Using the air spray line, spray inside of blast cabinet and allow recycle system to operate for a sufficient length of time to ensure that all reclaimable media is returned to pressure pot.

- Prepare a third toolbox according to Step 4 and place toolbox in blast cabinet. (This step ensures that operator will not run out of parts to depaint during flow rate test.)

- Repeat media flow rate test. Record start and finish times.

- If results of the first two test vary significantly, repeat air spray down and flow rate test. Record start and finish times of third flow rate test in Laboratory Notebook.

- Calculate average media flow rate for the tests. Record average media flow rate in Laboratory Notebook.

7) Continue test run:

- Add additional 10 pounds of media to feed hopper and record weight and time of addition in Media Log Book.

- Prepare and blast parts using same blasting parameters used in flow rate test. During each test run, 3 toolboxes, 2 smoke generators and a collection of 8V parts (depending on availability) should be depainted. Appendix B lists and describes candidate parts.

- Note whether paint is coming off in big flakes or small specs. Record description of paint removal in Parts Log Book.

- Record each part's blasting finish time in Parts Log Book.

- Any further observations and comments concerning test run should be recorded by engineer and/or operator in Laboratory Notebook.

8) Add media during test run:

- After 60 minutes and after 120 minutes of blasting, add approximately 5000 grams (10 lbs) of new plastic media to feed hopper. Record weight of media added and time of addition in Media Log Book.

9) Empty dust collector hourly:

- Turn off fan.

- Open waste gate and allow waste media to drop into waste collection bucket. Observe "1st drop waste." If more than one pound of media drains into collection bucket, take 100 gram sample for sieve analysis, weigh "1st drop waste," record weight in Media Log Book and return "1st drop waste" to feed hopper. Recycle portholes "E" must be adjusted. See Step 1.0.

- Close waste gate and hit dust cabinet shaker button for 30 seconds.

- Open gate and allow waste media to drain into bucket. With gate open, continue hitting shaker button (usually an additional 15-30 seconds) until a minimal flow of waste drains from the dust collector.

- Weigh dust waste and record it in Media Log Book.

10) Adjust recycle system if necessary:

- If a significant amount of good media is noticed in waste during waste collection, decrease openings of recycle portholes "E" to reduce waste removal rate.

- When blasting, if an increased amount of dust is noticed in blast cabinet, increase openings of recycle portholes "E" to increase the waste removal rate.

11) Determine Media Size:

- At start of test run, at approximately 120 minutes, and at end of test run, collect 100 gram samples of media for sieve analysis.

- Collect 100 gram samples of any waste media returned to feed hopper.

- Set up Ro-Tap shaker with 5 sieves: 12, 20, 30, 40 and 60 mesh and one collector base.

- Pour each sample into top sieve and turn on shaker for 3 minutes.

- After 3 minutes, collect sample on each sieve and weigh. Record data in Media Size Log Book.

12) End test run:

- Continue test run until approximately four hours of blast time have elapsed.

- Finish blasting final logged in part.

- Record final blasting time in Parts Log Book and Media Log Book. Disconnect time clock.

- Empty dust collector as described in Step 9.

13) Empty blast cabinet system:

- Close ball valve C.

- Place plastic bucket in cabinet, reduce pressure to 5-10 PSI (B) and blast media into bucket.

- When bucket is full, stop and weigh media. Record weight in Media Log Book and discard media.

- Repeat preliminary collection until no more media can be collected.

- 2 operators are required to collect remaining media.

  Operator One: Open feed hopper door and place collection bucket firmly against cyclone exit.

  Operator Two: Turn on fan. Slowly increase air pressure back to test run conditions and blast media. When no more media exits blast hose, stop blasting and spray inside of blast cabinet with air spray hose to ensure no media remains in cabinet.

  Continue this secondary collection procedure until no more media can be collected from cyclone. Weigh media and record in Media Log Book. Discard media.

14) Determine media consumption for test run:

media added to system (lbs) - media emptied from system (lbs)
= media consumed (lbs)

15) Determine media recycle percent for test run:

$$1 - \frac{\text{media consumed (lbs)}}{\text{media flow rate (lb/min) x total time of test (min)}} \times 100\%$$

= media % recycle

16) Clean up:

- Sweep and vacuum around outside of blast equipment, in feed hopper, and in blast cabinet as necessary to remove excess media and dust.

17) Troubleshooting:

- Media flow decreases or stops before pressure pot is empty:

  1) Opening of media flow valve D may be too small for media feed system to work properly. Open valve until a smooth flow is obtained. Media flow rate tests must be repeated when media valve (D) setting is changed.

  2) Paint chips may be clogging feed system. Close ball valve C and increase pressure to 60 PSI. Blast until debris is dislodged. If debris is still clogging feed system, open media flow valve D 5 screw turns and blast until debris is dislodged.

FIGURE A-1
SCHEMATIC OF BLAST CABINET

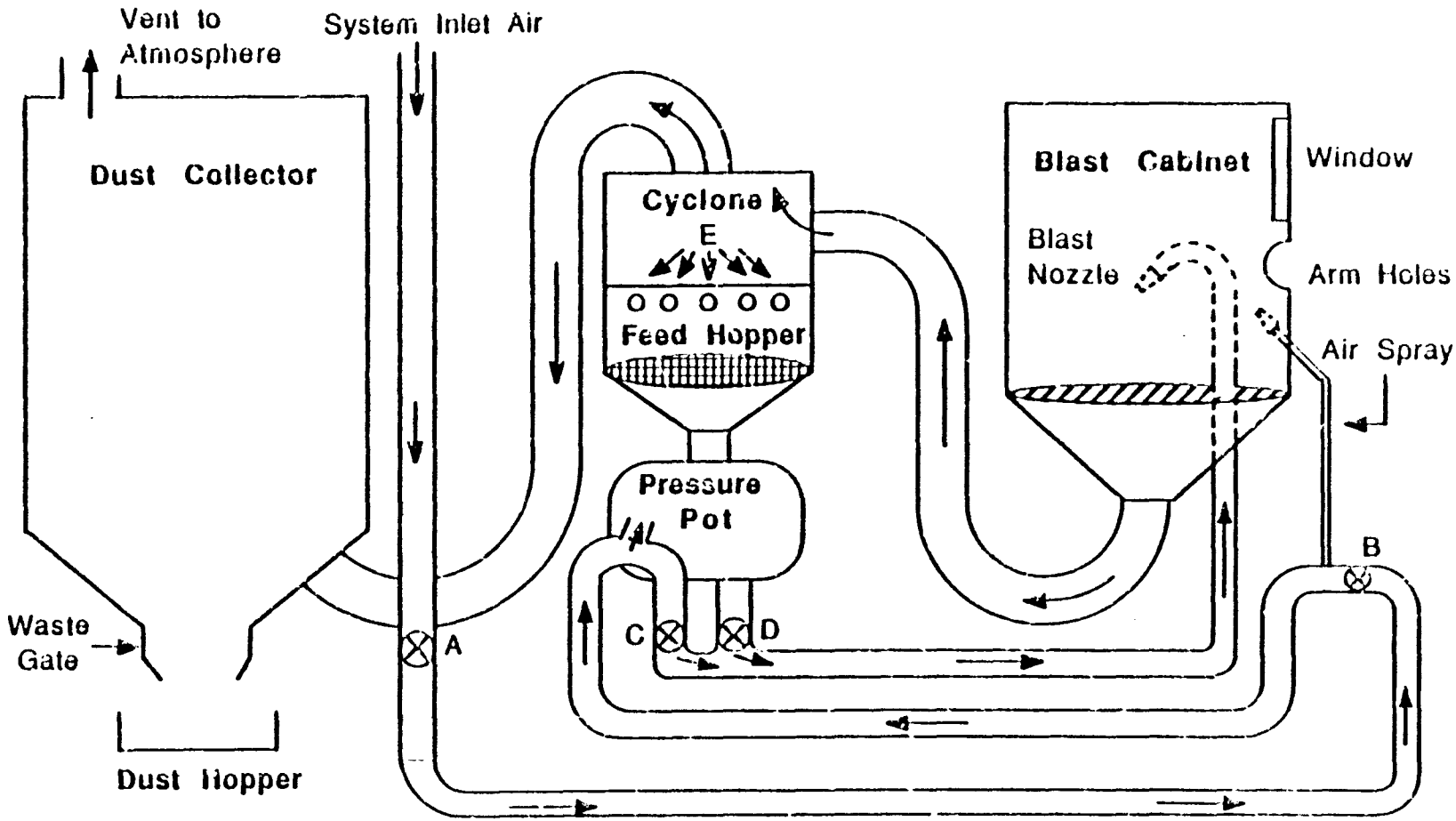

A) Valve to control inlet air from building (always open)
B) Pressure regulator
C) Ball valve to control air flow to blast nozzle
D) Valve w/ T handle to control media flow to blast nozzle
E) Recycle port holes

Dust Collector: 38 1/2" x 33" x 81"
Blast Cabinet: 48 1/2" x 47" x 70"
Cyclone: - diameter: 24"
- height: 71"
(excluding pressure pot)

Source: Arthur D. Little, Inc.

A.2 Walk-in Blast Room Operating Procedure, Test Series IV

See Figure A.2 for Blast Booth schematic

1) Empty blast system of old media at beginning of Test Series IV:

- Close valve C.
- Reduce pressure at pressure regulator A to 30 psi.
- Activate nozzle and discharge media from nozzle into collection drum.
- In conjunction use air spray line to blowdown floor wells to ensure all media in the blast booth is sent to the reclaimer system.
- Continue activating nozzle until no more media discharges from nozzle.
- Open gate to the screen in reclaimer system and remove debris from the screen.
- Open door on feed hopper and manually remove any media remaining in hopper.

2) Add media to blast booth system:

- Empty four 250 lb drums of virgin media onto floor grating.
- Operate reclaimer system until a sufficient amount of media is recycled into feed hopper to begin testing.
- Record weight of media added in Media Log Book.

3) Set blasting parameters:

- Adjust pressure regulator A to desired pressure.
- Adjust media flow valve C to desired flow rate.
- Adjust ventilation gate D to desired ventilation rate (100 ft/min is required by LEAD for safe operating procedures.)
- Place empty collection drums under dust collectors.
- Set time clock to 0:00.
- Record operating parameters in Media Log Book; air pressure, nozzle distance, blasting angle, ventilation rate and nozzle size.

4) Prepare test parts for blasting:

- Measure paint thickness of aluminum parts using a Minitector 150 Thickness Gauge (see Appendix C for operating instructions).

- Measure paint thickness of steel parts using an Inspector Thickness Gauge (see Appendix C for operating instructions).

- Record name and paint thickness for each part undergoing blasting in Parts Log Book.

- Note any unpainted parts undergoing blasting for rough up purposes.

5) Begin test run:

- Discuss desired blast parameters with operators, specifically nozzle distance and nozzle angle.

- Place test parts in booth as needed.

- Turn on ventilation and reclaimer systems.

- Blast test parts.

- Note whether paint is coming off in big flakes or small specs and record description of paint removal in Part Log Book.

- Record blasting finish time of each part (or basket of parts) in Parts Log Book.

- Record additional comments by the engineer and/or operator concerning the test run in Laboratory Notebook.

6) Add media during test run:

- Add 250 lb of media to floor grating when media level drops below the second of three view windows in feed hopper.

- Record any media additions in Media Log Book.

7) Determine media size:

- During test run collect 100 gram samples of virgin media, recycled media and waste media.

- Weigh sample on electronic balance and record weight in Media Size Log Book.

- Set up Ro-Tap Testing Sieve Shaker with 5 sieves; 12, 20, 30, 40 and 60 U.S. Sieve size, tray and one collector base (See Appendix C for more information on Sieve Shaker).

- Pour sample onto top sieve tray and turn on shaker for three minutes.

- Collect sample on tray, weigh, and record data in Media Size Log Book.

8) End test run:

- Continue test run until approximately four hours of blast time has elapsed.

- Finish blasting final part and record time in Parts Log Book.

- Remove waste collection drums. Replace with empty drums.

- Continue to operate ventilation and reclaimer system. Spray floor wells with air spray line until floor wells are cleaned and residual media has been recycled back to feed hopper (20-30 minute procedure). As necessary, manually remove grates to clear and remove debris plugging holes in the floor wells.

- Open door to screen on the reclaimer system. Clean debris from the screen and remove screen.

- Level media in feed hopper with hoe. Measure distance from top of media in hopper to top of the hopper.

- Replace screen and close door.

- Weigh waste media collected during test run and waste collected during cleaning operation. Note that manual shaking of dust cabinet is not required because blast booth system has an automatic back flush system to clean filters.

- Read pressure drop across filter cartridges and HEPA filters from photohelic differential pressure gauge.

- Record measurements in Media Log Book

- Unless changing types of media do not empty feed hopper at the end of Test Run. Use "end of run" readings as "start of run" readings for the following day.

9) Adjust system recycle:

- Raise recycle adjustment mechanism in cyclone if higher media recycle is desired.

- Lower recycle adjustment mechanism is cyclone if lower media recycle rate is desired.

- If additional wasting is desired, open flaps on cyclone to allow more air into cyclone.

10) Determine media consumption for test run:

- Method A: Assume media consumption equals waste media.

- Method B: Assume media consumption equals media loss in feed hopper.

Media Consumption (lbs)	=	media height change in feed hopper (in)	x	cross sectional area (in^2)	x	media density (lb/in^2)
	+	media added during test run (lbs)				

11) Troubleshooting:

- Media flow decreases or stops before pressure pot is empty:

  1) Media flow valve C opening may be too small for media feed system to work properly. Open valve until smooth flow is obtained.

  2) Paint chips and other debris may be clogging feed system. Close ball valve B and increase pressure at pressure regulator A. Blast until debris is dislodged. If debris is still clogging feed system, turn media flow valve C to 100% open and repeat high pressure blast procedure.

FIGURE A-2
SCHEMATIC OF WALK-IN BLAST ROOM

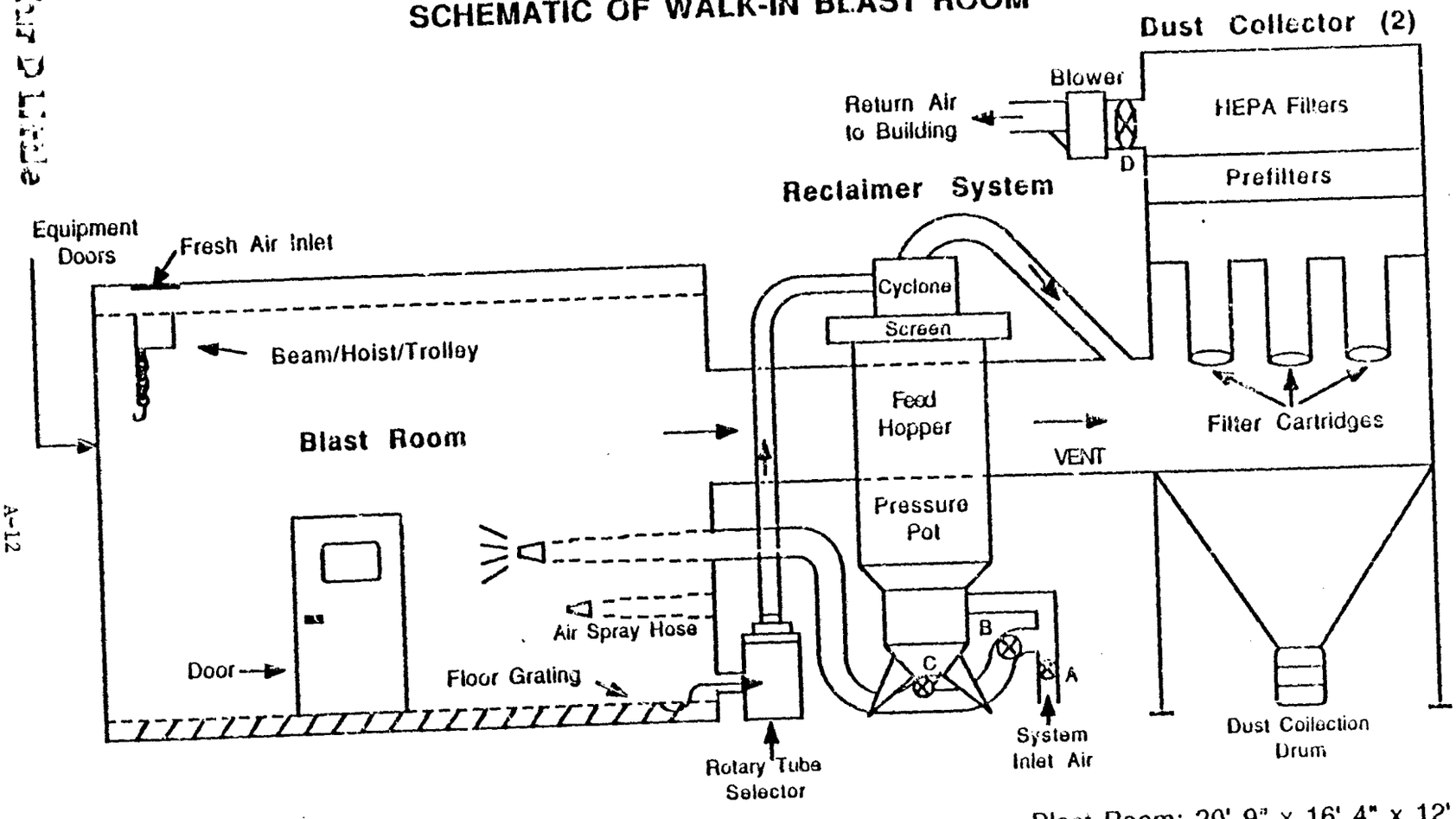

A) Pressure regulator
B) Ball valve to control air flow to blast nozzle
C) Valve to control media flow to blast nozzle
D) Gate to control ventilation flow in blast room

Blast Room: 20' 9" x 16' 4" x 12'
Reclaimer System: 12' 8" x 3' dia.
Dust Collector: 7' x 17' 8" x 18' 9"

Source: Arthur D. Little, Inc.

APPENDIX B

EQUIPMENT PARTS DEPAINTED DURING TEST SERIES 1, 2, 3 and 4

- Table B-1 (Smoke Generator Parts/Fog Oil Pumps and Toolbox)
- Table B-2 (8V Engine Parts/Model 95)
- Table B-3 (8V Engine Parts/Model 96)
- Table B-4 (Containers, Decontaminating Apparatus and Miscellaneous Equipment)
- Table B-5 (Panels/M2 Heater and M2-12 Pump Unit)

Table B-1
Smoke Generator Parts
(Fog Oil Pump)

A) Oil Pump Cover - Aluminum
1040-00-659-5174
S.A.(a)= 15 in^2

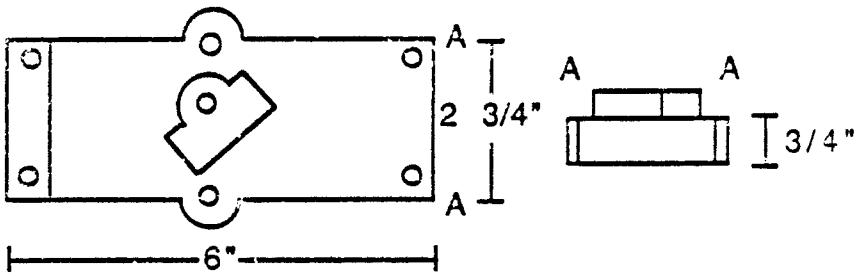

B) Shroud - Aluminum
1040-00-659-5167
S.A.= 27 in^2

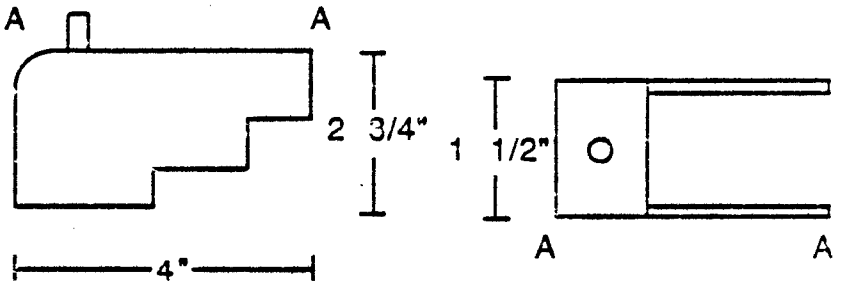

C) Oil Dis Separator - Aluminum
1040-00-659-5180
S.A.= 12 in^2

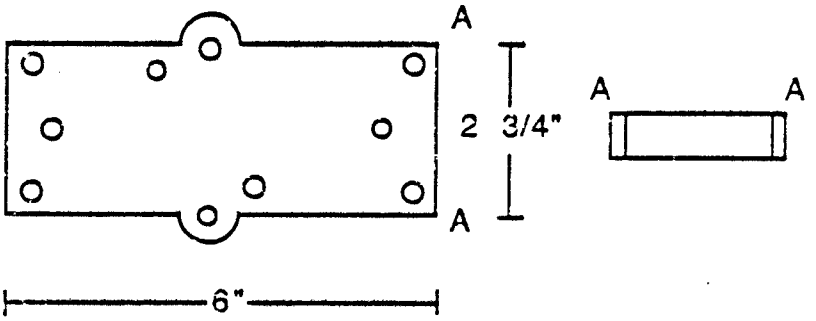

Table B-1 (Continued)
Smoke Generator Parts
(Fog Oil Pump)

D) Cylinder Oil Assembly - Aluminum
1040-00-658-5565
S.A.= 59 in ^{2}

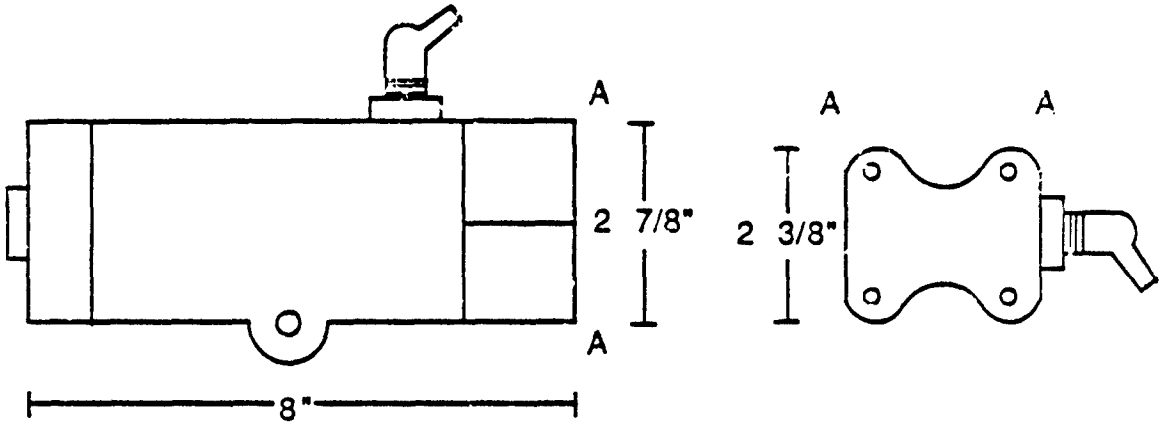

E) Valve Cover - Aluminum
4820-00-622-3400
S.A.= 75 in ^{2}

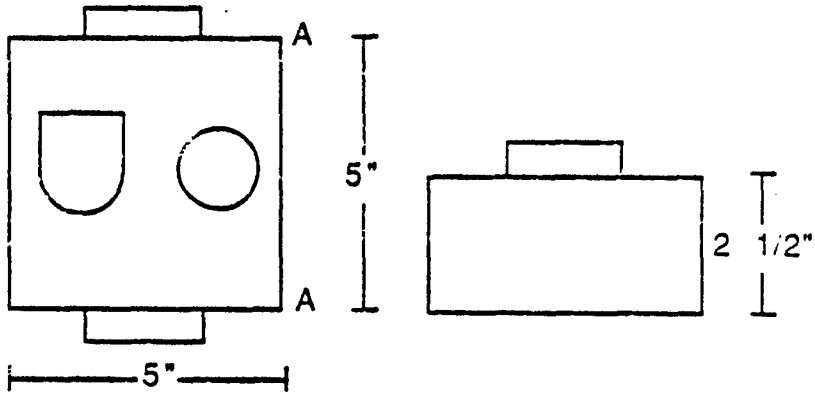

Table B-1 (Continued)
Smoke Generator Parts
(Fog Oil Pump)

F) Shroud - Aluminum
1040-00-659-5166
S.A.= 41 in^2

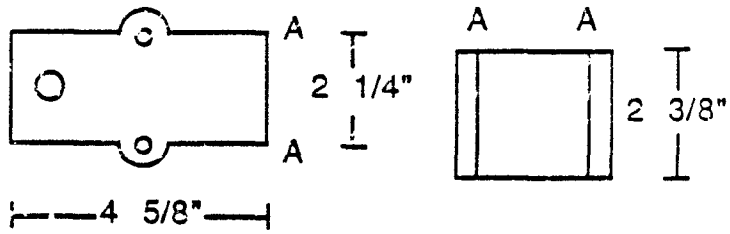

G) Cylinder End Top - Aluminum
1040-00-659-5172
S.A.= 14 in^2

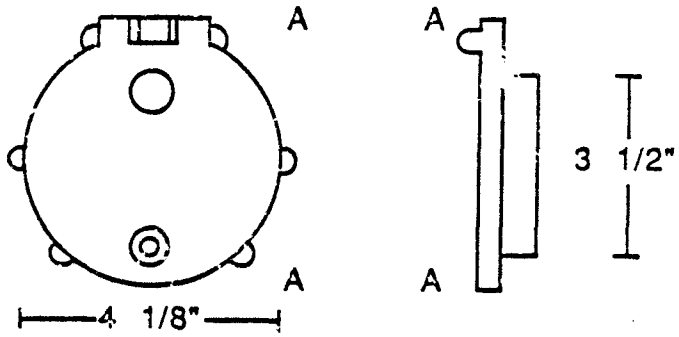

H) Front Cover - Aluminum
S.A.= 75 in^2

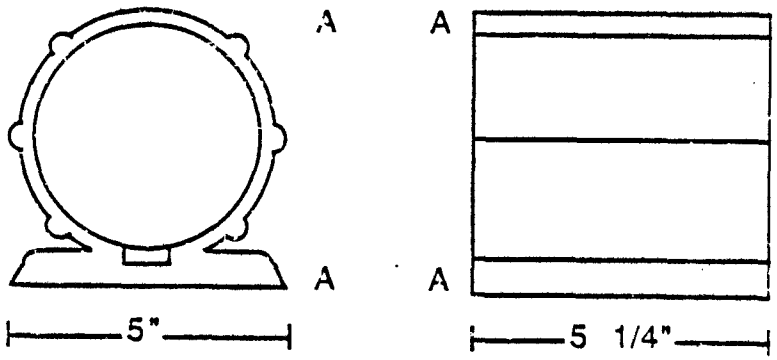

Table B-1 (Continued)
Smoke Generator Parts
(Toolbox)

l) Toolbox - Aluminum
S.A.= 924 in ^{2}

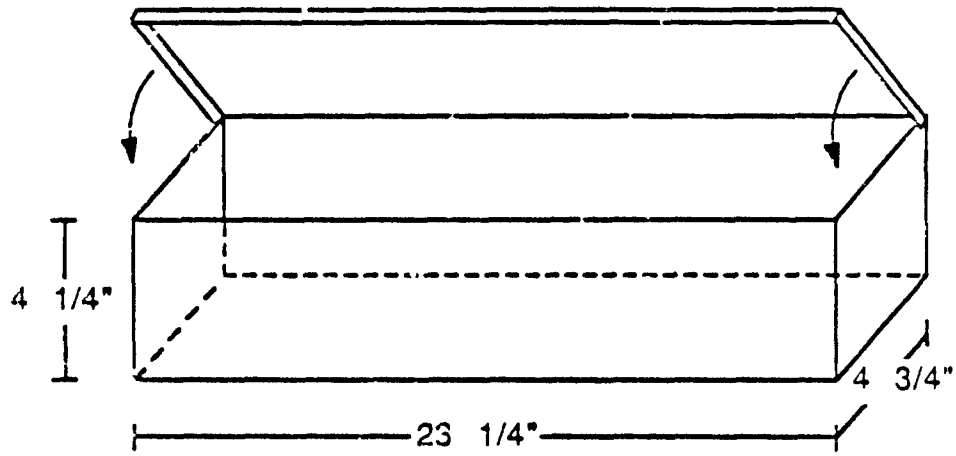

(a) S.A. = Painted Surface Area
Source: Arthur D. Little, Inc. and Letterkenny Army Depot

Table B-2
8V Engine Parts
(Model 95)

A) Weight Cover Bracket - Steel
5315-00-252-5987
5108176
S.A.(a)= 112 in ^{2}

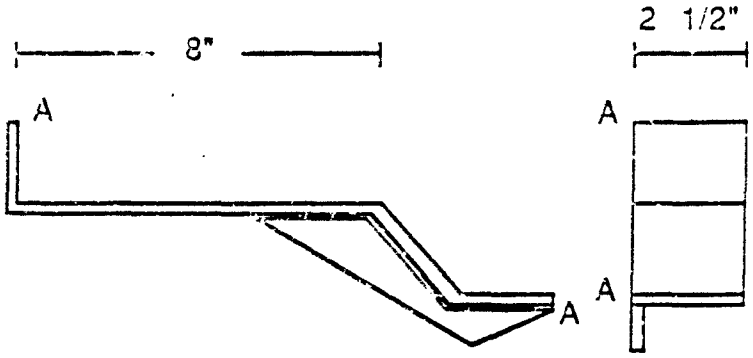

B) Pipe - Steel
5102326
S.A.= 84 in ^{2}

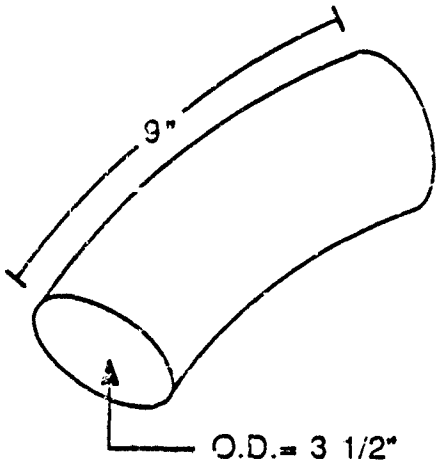

C) Bracket - Steel
5131455
S.A.= 56 in ^{2}

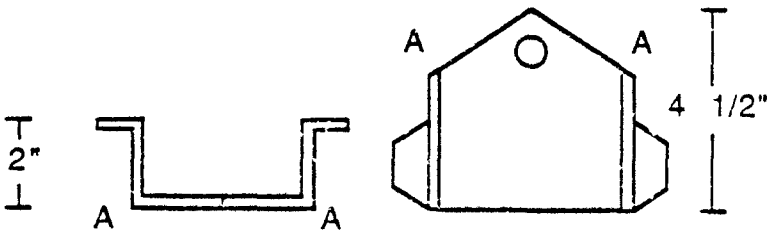

D) Bracket - Steel
5130435
S.A.= 31 in ^{2}

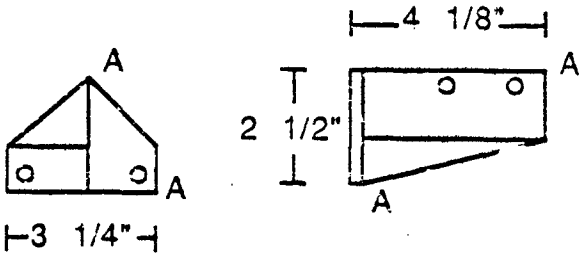

Arthur D Little

Table B-2 (Continued)
8V Engine Parts
(Model 95)

E) Thermo Housing - Steel
2930-00-74507828
5124286
S.A.= 120 in^2

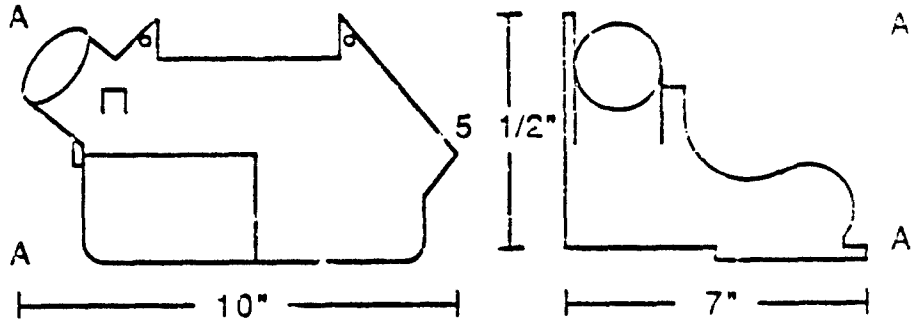

F) Cover Assembly - Steel
2930-00-197-4849
5108324
S.A.= 124 in^2

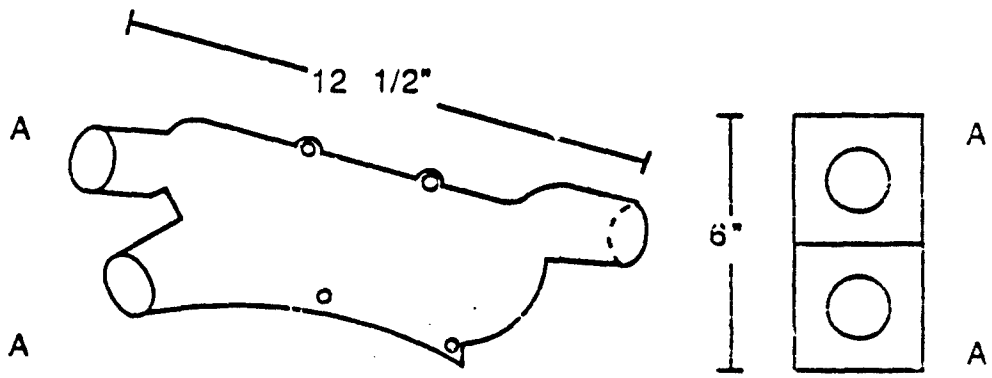

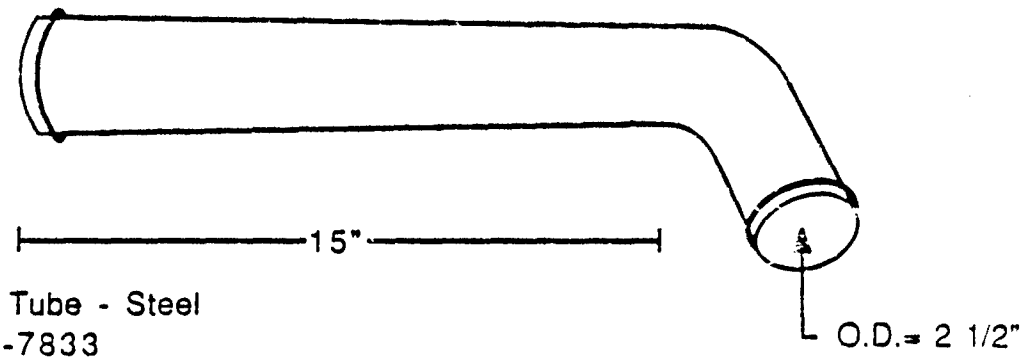

G) Water Bypass Tube - Steel
2930-00-745-7833
51044548
S.A.= 135 in^2

Table B-2 (Continued)
8V Engine Parts
(Model 95)

H) Water Crossover Tube - Steel
2930-00-637-5033
5103341
S.A.= 173 in^2

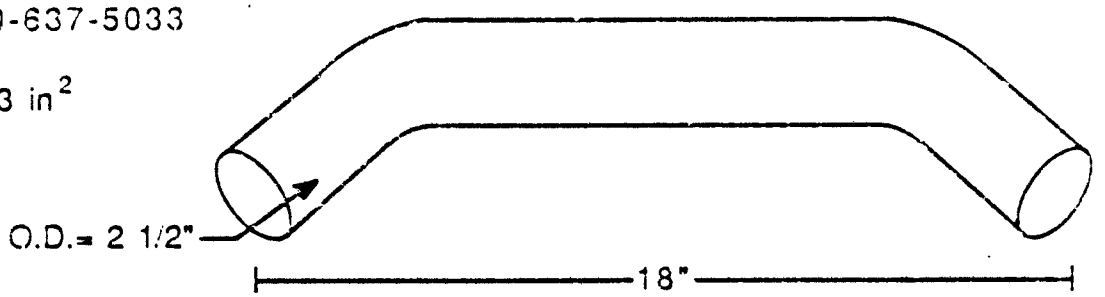

I) Miscellaneous Small Parts - Steel
S.A.= Approximately 20 in^2

J) Crankshaft Spacer
3120-00-855-5189
5132357
S.A.= 42 in^2

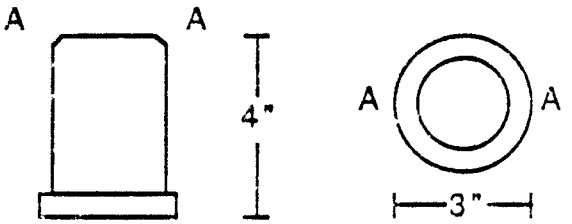

K) Unnamed Part - Steel
S.A.= 124 in^2

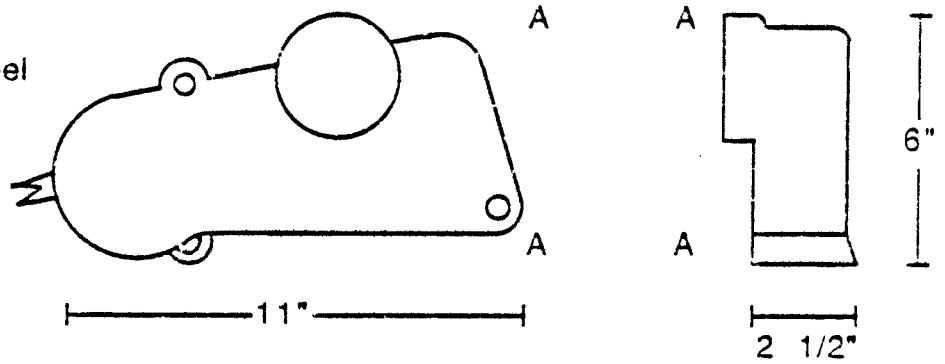

Table B-2 (Continued)
8V Engine Parts
(Model 95)

L) Bracket - Steel
S.A.= 45 in^2

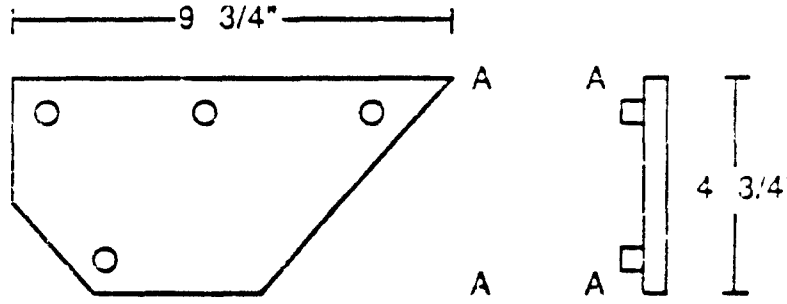

(a) S.A. = Painted Surface Area
Source: Arthur D. Little, Inc. and Letterkenny Army Depot

Table B-3
8V Engine Parts
(Model 96)

A) Air Box Cover - Aluminum
2815-00-159-8753
5132458
S.A.(a)= 24 in^2

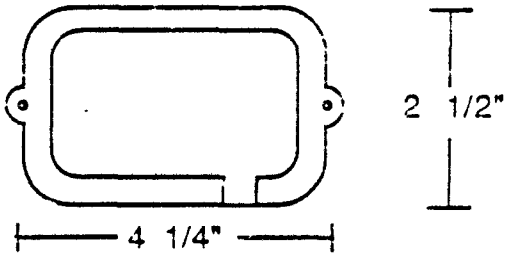

B) Air Box Cover - Aluminum
2815-00-159-8754
5144186
S.A.= 43 in^2

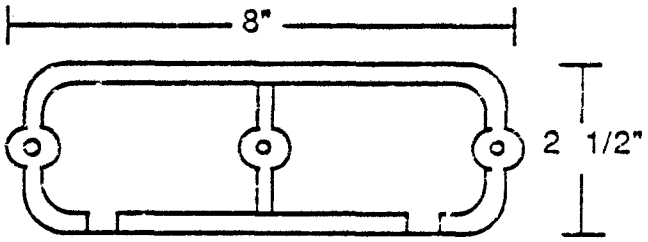

C) Flywheei Cover - Steel
2815-00-902-1767
5122219
S.A.= 28 in^2

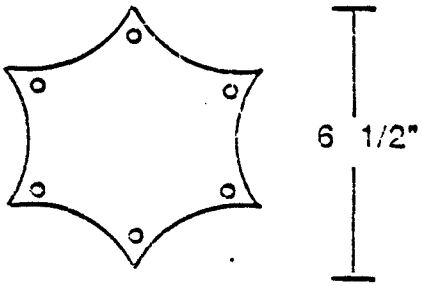

Arthur D Little

Table B-3
8V Engine Parts
(Model 96)

D) Flywheel Cover - Steel
2815-00-986-0489
5122281
S.A.= 47 in ^{2}

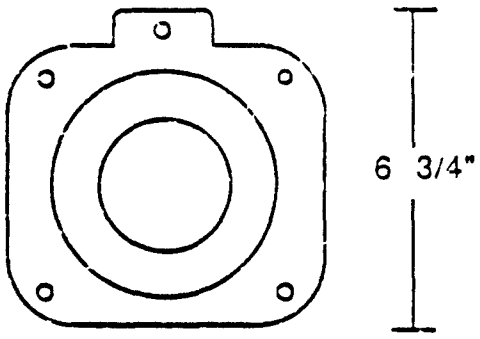

E) Camshaft Damper - Steel
5189863
S.A.= 13 in ^{2}

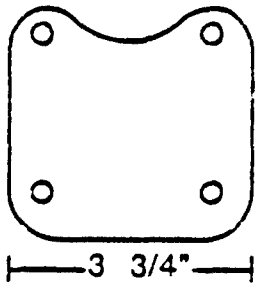

F) Air Housing - Aluminum
5136789
S.A.= 247 in ^{2}

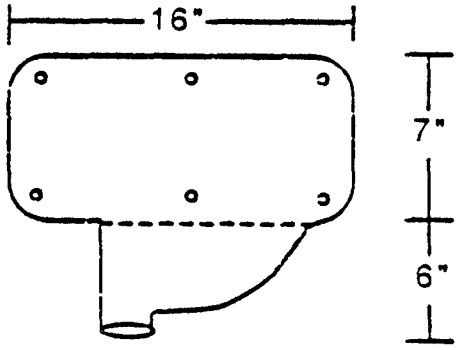

Table B-3 (Continued)
8V Engine Parts
(Model 96)

G) Camshaft Gear Cover - Aluminum
5122680
S.A.= 265 in^2

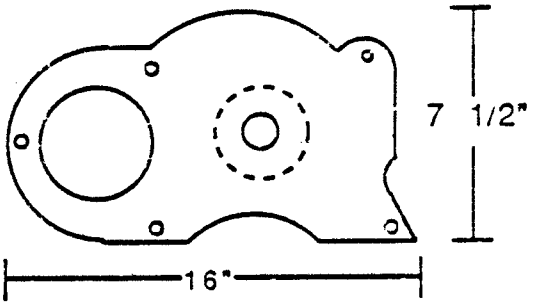

H) Pulley - Steel
3020-00-217-5707
5138717
S.A.= 46 in^2

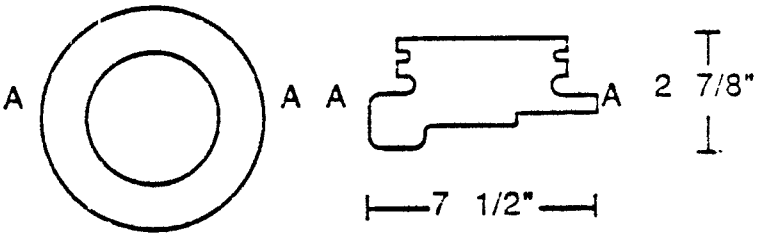

I) Shaft - Steel
2815-00-961-9802
5117920
S.A.= 23 in^2

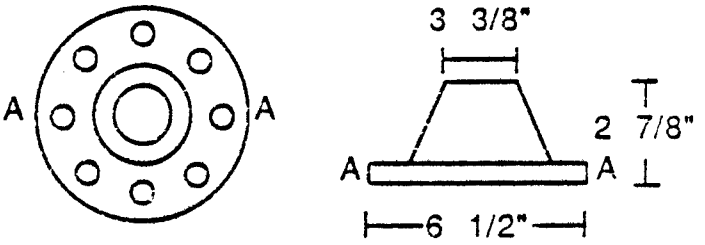

J) Valve Cover - Aluminum
2990-00-443-2103
5132550
S.A.= 450 in^2

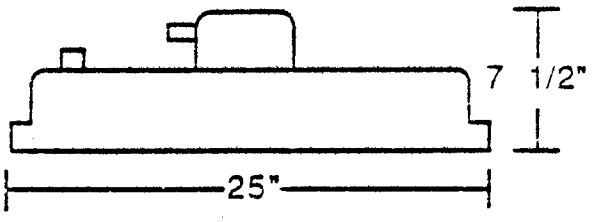

Arthur D Little

Table B-3 (Continued)
SV Engine Parts
(Model 96)

K) Valve Cover - Aluminum
5140317
S.A.= 450 in^2

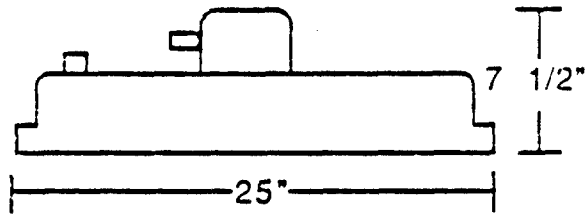

L) Damper - Steel
5109863
S.A.= 71 in^2

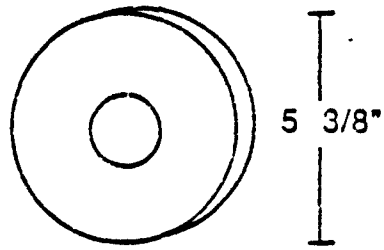

M) Elbow - Steel
S.A.= 112 in^2

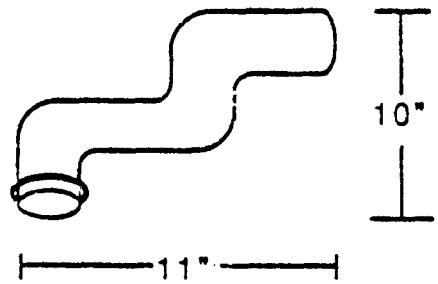

N) Fuel Strainer Shell - Steel
5575893
S.A.= 105 in^2

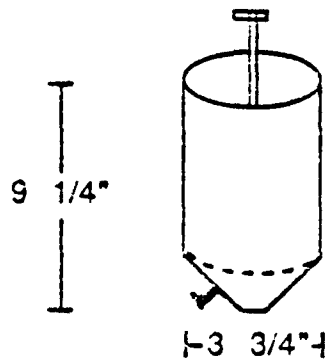

Table B-3 (Continued)
8V Engine Parts
(Model 96)

O) Air Intake - Aluminum
5103041
S.A.= 464 in^2

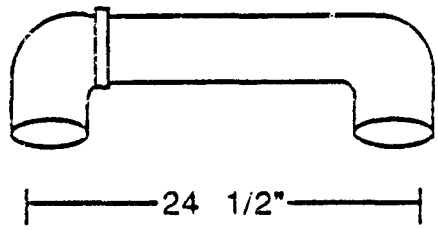

P) Cross Over Tube - Steel
5102826
S.A.= 353 in^2

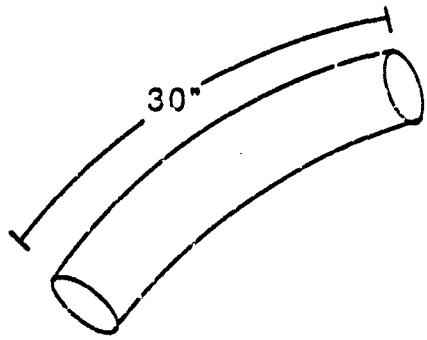

Q) Front End Plate - Steel
2815-00-855-5789
5132422
S.A.= 236 in^2

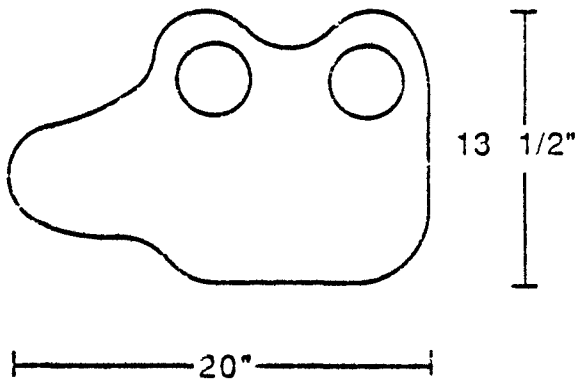

Table B-3 (Continued)
8V Engine Parts
(Model 96)

R) Miscellaneous Small Parts
S.A.= 20 in^2 (Approx.)

S) Unnamed Part - Steel
S.A.= 180 in^2

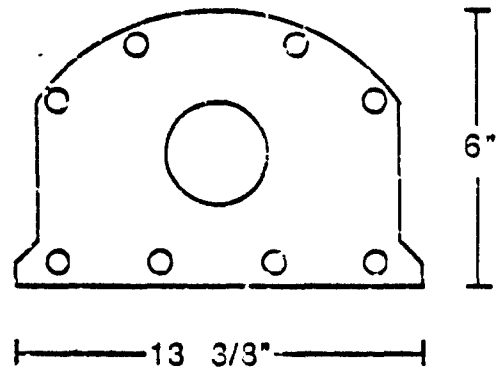

T) Elbow - Steel
S.A.= 133 in^2

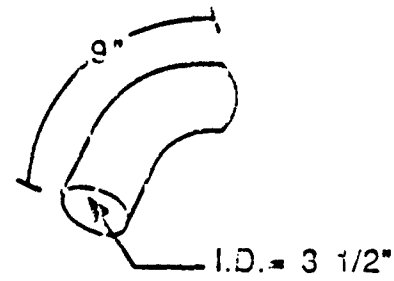

(a) S.A. = Painted Surface Area
Source: Arthur D. Little, Inc. and Letterkenny Army Depot

Table B-4
Containers

A) Engine Container, 8V 95 Engine - Steel
8145-00-064-6734
S.A.(a)= 253 ft^2

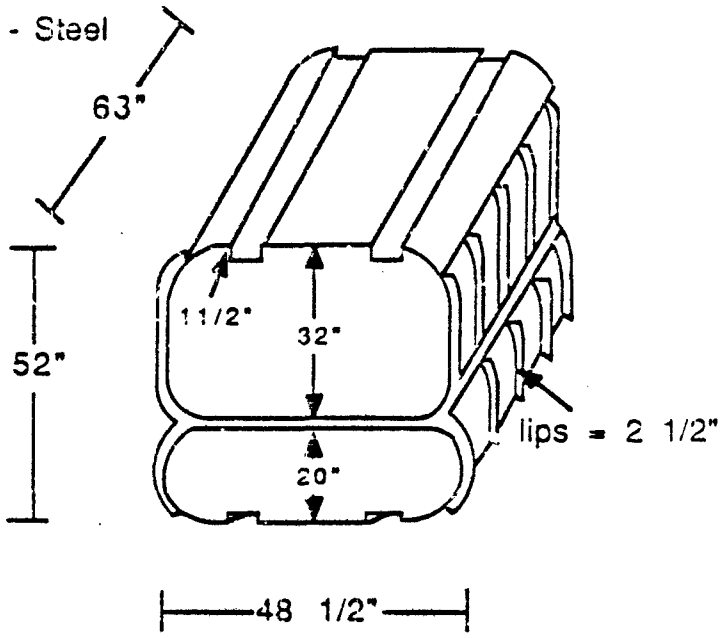

B) Engine Container, 8V 96 Engine - Steel
8145-00-086-7617
S.A.= 259 ft^2

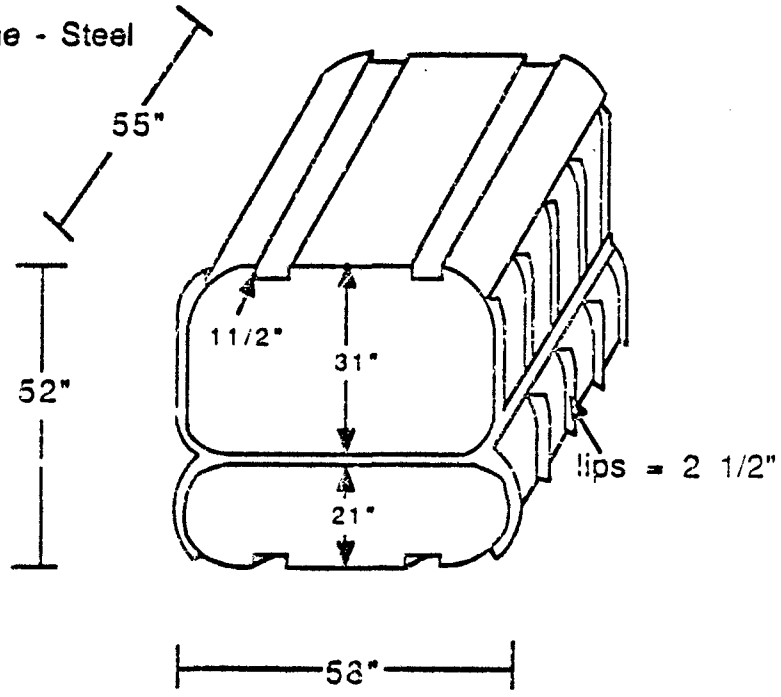

Arthur D Little

Table B-4 (Continued)
Containers

C) Transfer Container - Steel
8145-00-064-3935
S.A.= 138 ft^2

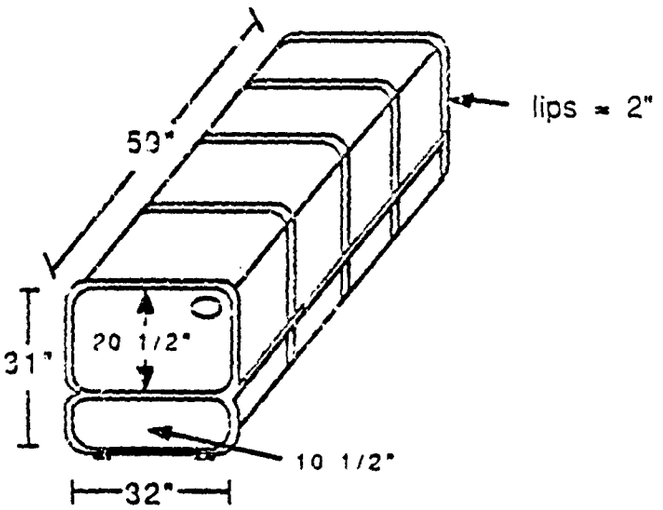

D) Transmission Container - Steel
8145-00-064-5934
S.A.= 182 ft^2

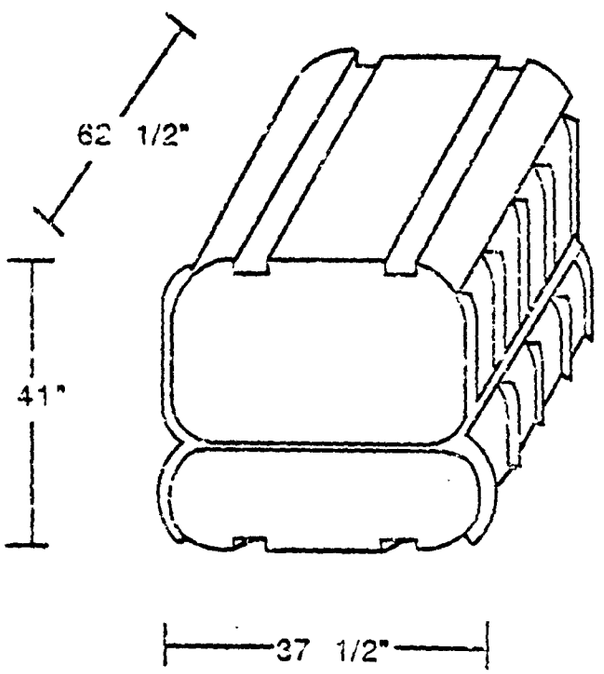

Table B-4 (Continued)
Containers

E) Hawk Transmission Container - Steel
8145-00-900-7992
S.A.= 31.9 ft^2

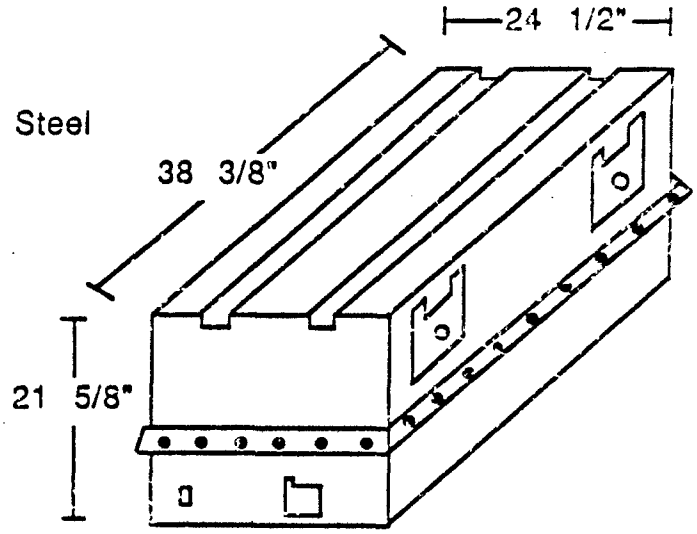

F) M109 Final Drive Container - Steel
8145-00-124-7632
S.A.= 31.4 ft^2

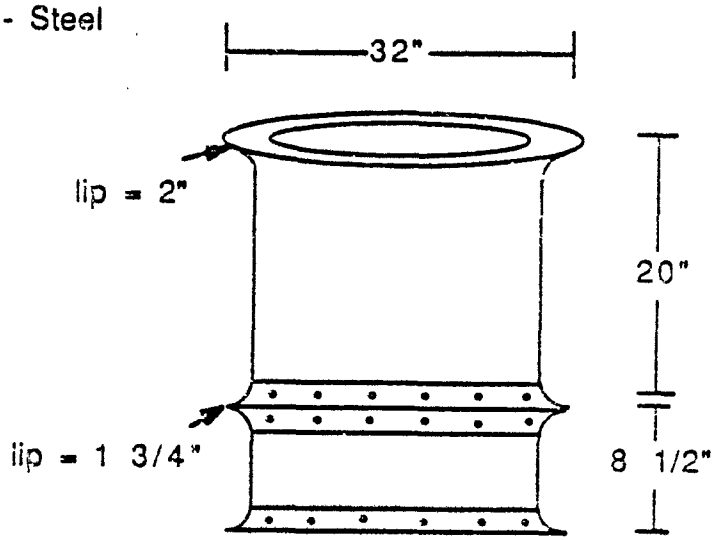

Arthur D Little

Table B-4 (Continued)
Containers

G) M110 Final Drive Container, Right Set - Steel
8145-00-858-5655
S.A.= 48.0 ft ^{2}

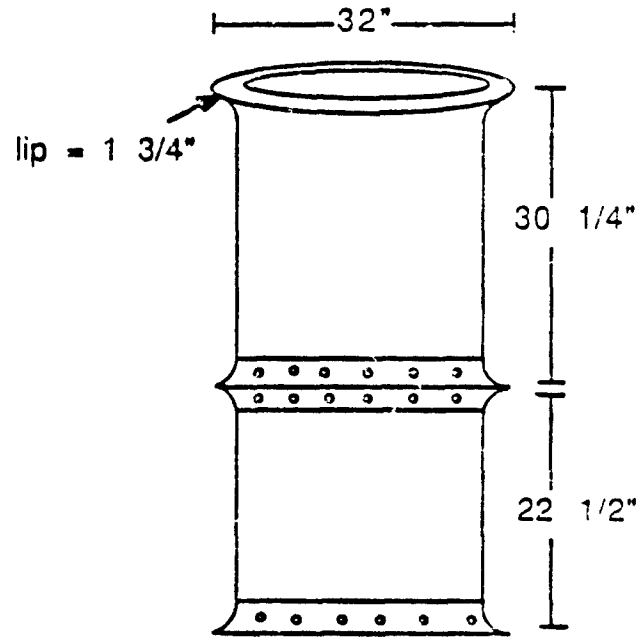

H) M110 Final Drive Container, Left Set - Steel
8145-00-858-5654
S.A.= 40.8 ft^2

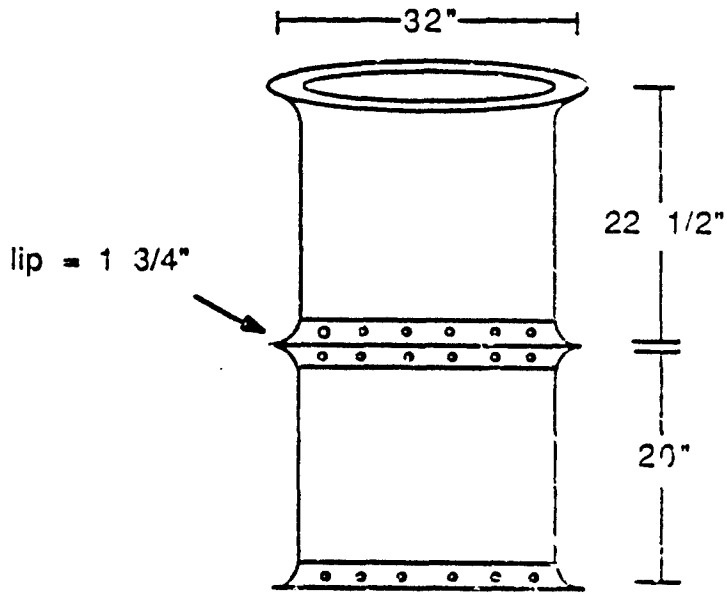

Table B-4 (Continued)
Containers

I) M110 Final Drive, Inside Drive Assembly - Steel
S.A.= 5.1 ft^2

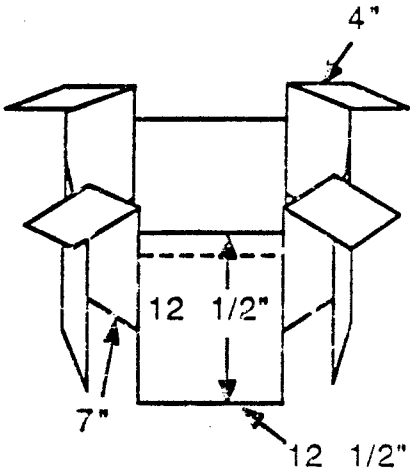

J) 3V Shipping & Storage Container - Steel
8145-00-086-7617
S.A.= 276 ft^2

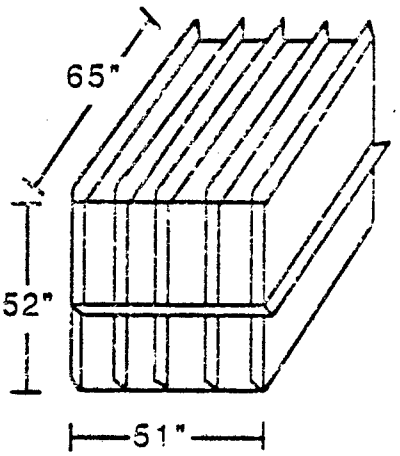

Table B-4 (Continued)
Decontaminating Apparatus

K) Water Tank - Stainless Steel
4230-00-735-9931
S.A.= 98.2 ft^2

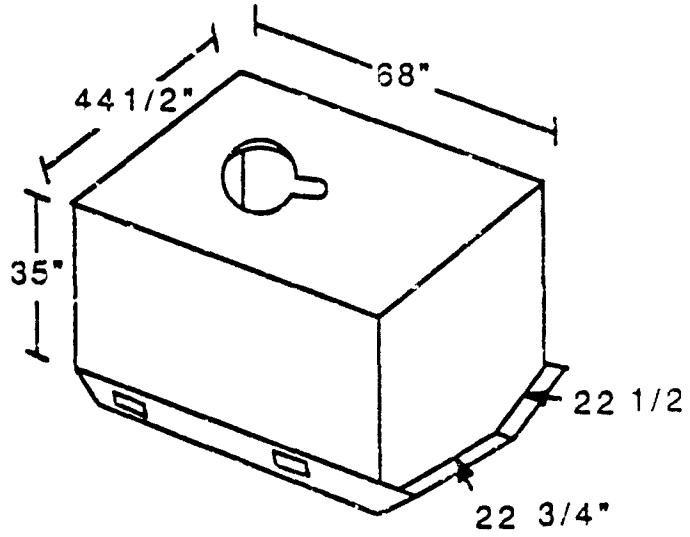

L) Water Tank Cover - Steel
4230-61-161-1610
S.A.= 2.4 ft^2

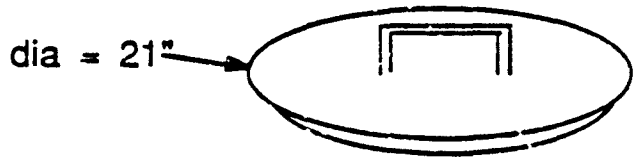

M) Hose Reel - Steel
C5-45-3192
S.A.= 11.0 ft^2

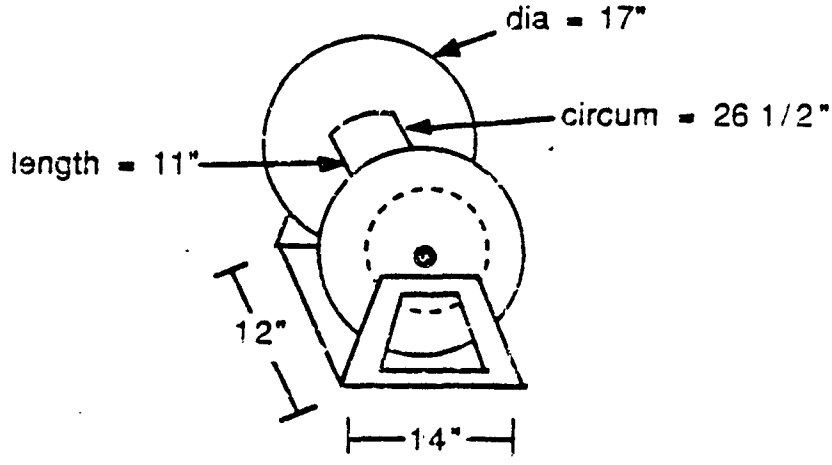

Table B-4 (Continued)
Decontaminating Apparatus

N) Blender
5340-01-191-5858
S.A.= 11.2 ft^2

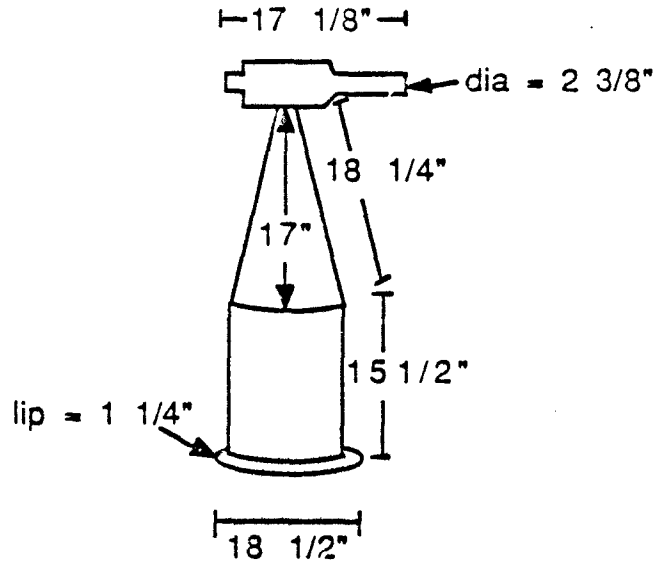

O) Pump Unit Frame Assembly - Steel
E5-45-2984
S.A.= 14 ft^2 (Approx.)

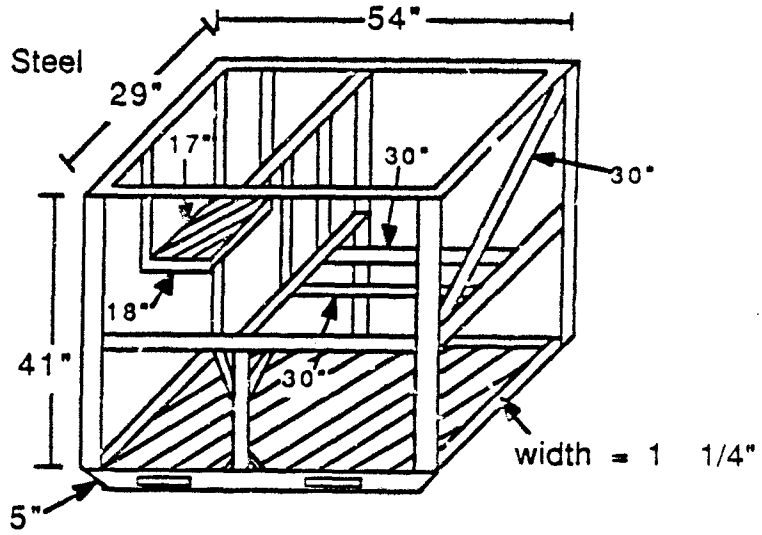

Table B-4 (Continued)
Miscellaneous Equipment

P) Engine Cover(1) - Aluminum
S.A.= 20.6 ft^2

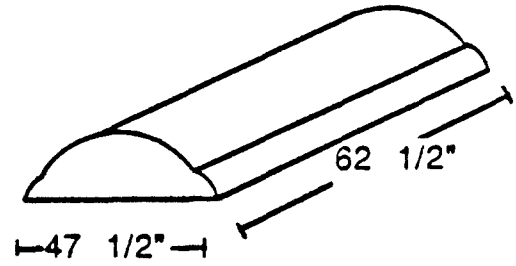

Q) Engine Cover(2) - Aluminum
S.A.= 15.3 ft^2

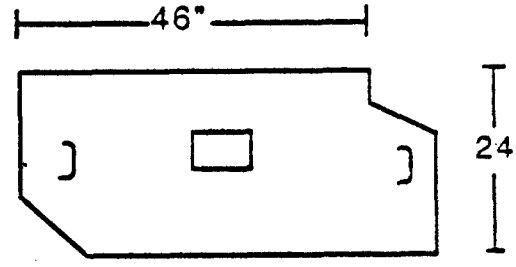

R) Cooling Fan - Aluminum
4140-01093-5829
S.A.= 18 ft^2 (Approx.)

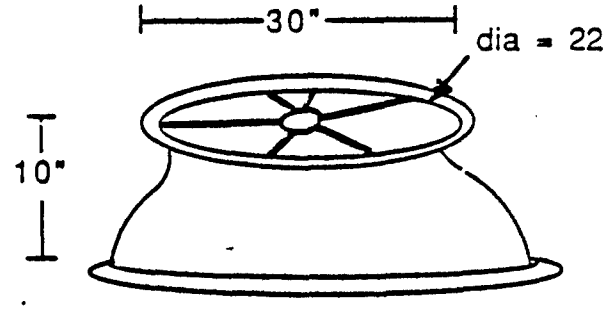

Table B-4 (Continued)
Miscellaneous Equipment

S) 250G Electronics Shelter - Aluminum
S.A.= 538 ft^2

OUTSIDE

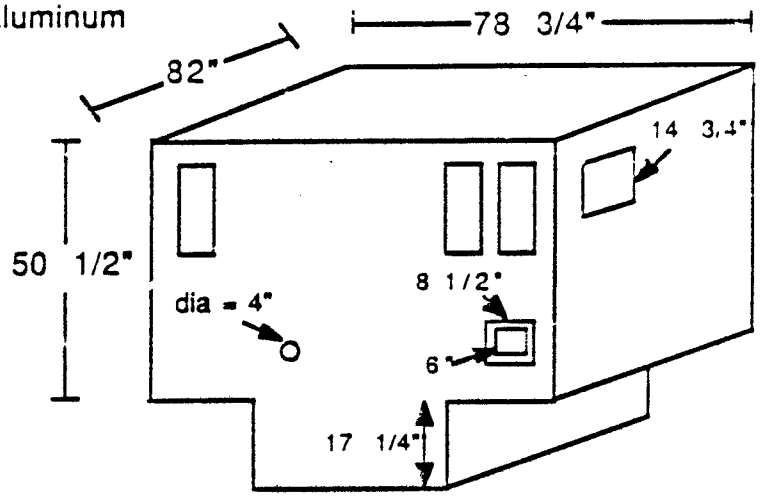

INSIDE (Top View)

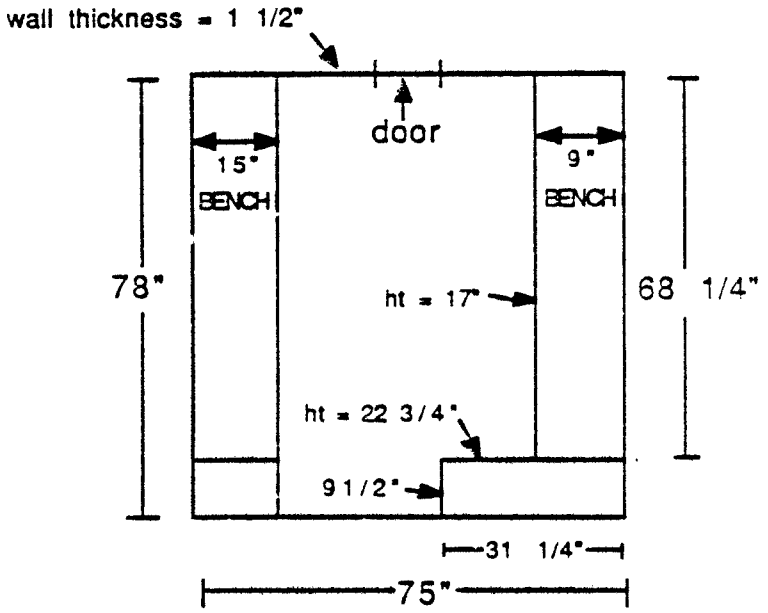

T) 175mm Projectile - Brass/Steel
S.A.= 4.0 ft^2

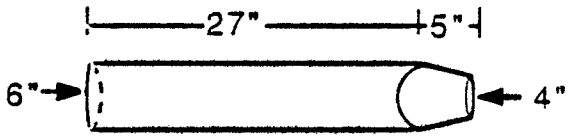

Arthur D Little

Table B-4 (Continued)
Miscellaneous Equipment

U) Missile Tip - Fiberglass
S.A.= 8.4 ft^2

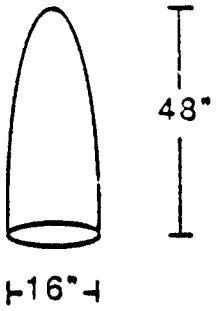

V) Plate Door & Grill - Aluminum
2J10-01-083-5411
S.A.= 10.7 ft^2

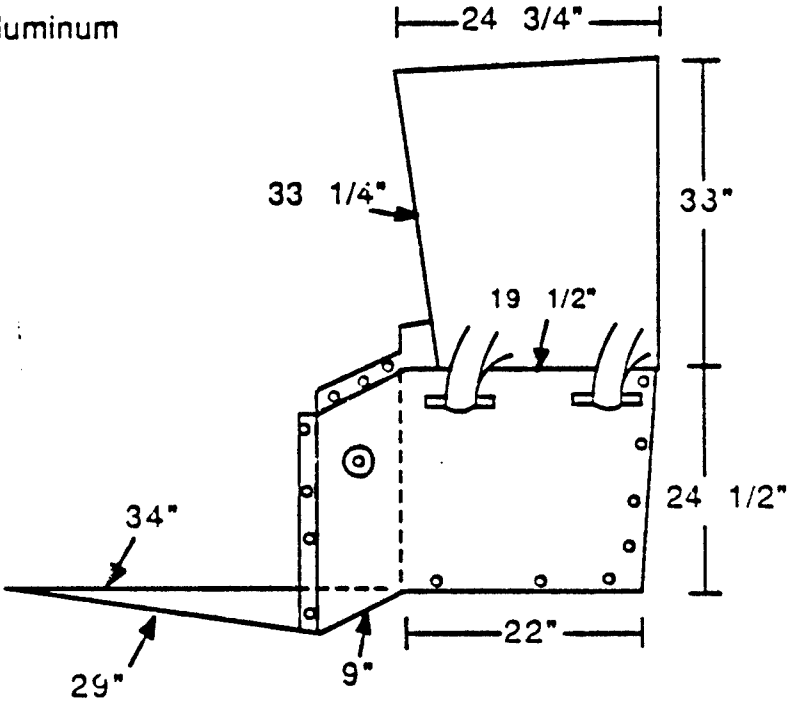

Table B-4 (Continued)
Miscellaneous Equipment

W) Ration Box - Aluminum
2540-244-1321
S.A.= 13.4 ft^2

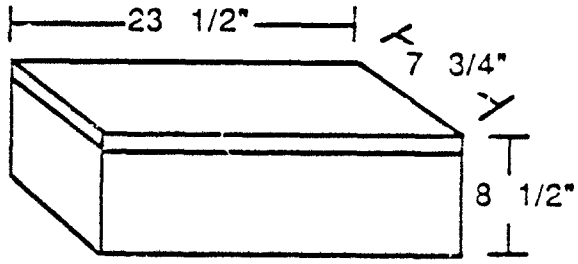

X) Periscope Corner - Aluminum
2510-133-0984
S.A.= 5.3 ft^2

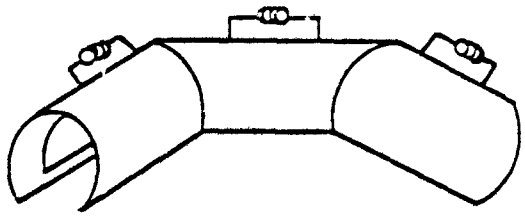

Y) Spade - Aluminum
Right: 2590-933-6260
Left: 2590-933-6259
S.A.= 11.0 ft^2

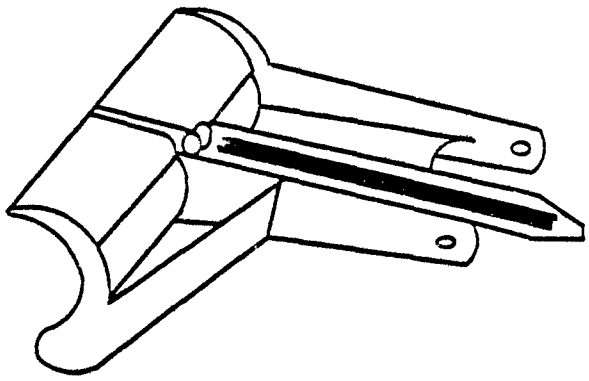

(a) S.A. = Painted Surface Area
Source: Arthur D. Little, Inc. and Letterkenny Army Depot

Table B-5
Panels
M2 Heater

A) S.A.(a)= 10.6 ft^2

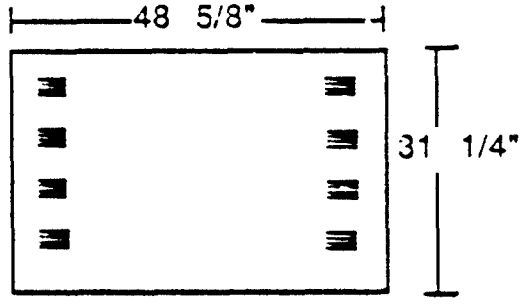

B) S.A.= 5.8 ft^2

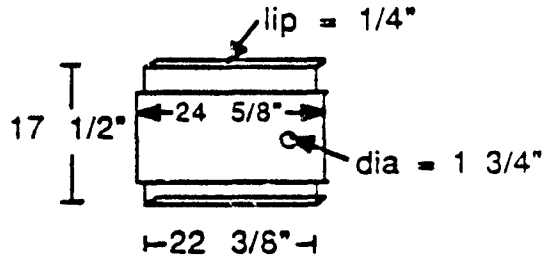

C) S.A.= 7.6 ft^2

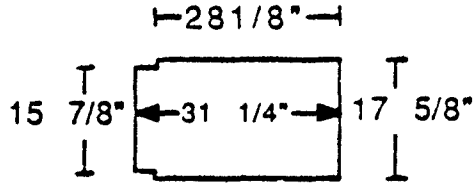

D) S.A.= 7.1 ft^2

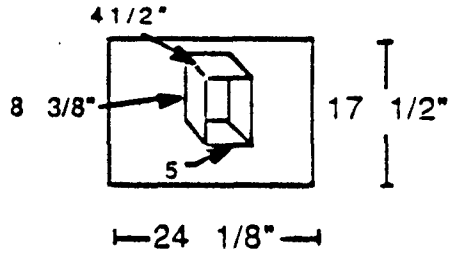

Table B-5 (Continued)
Panels
M2 Heater

E) S.A.= 11.4 ft^2

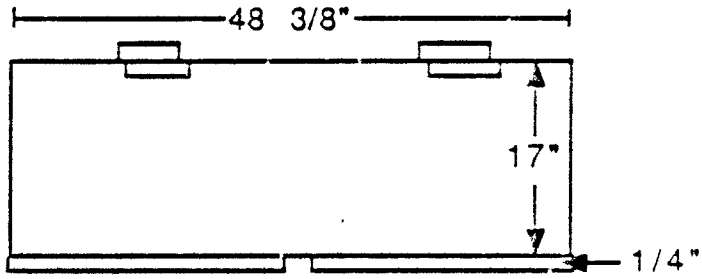

F) S.A.= 3.3 ft^2

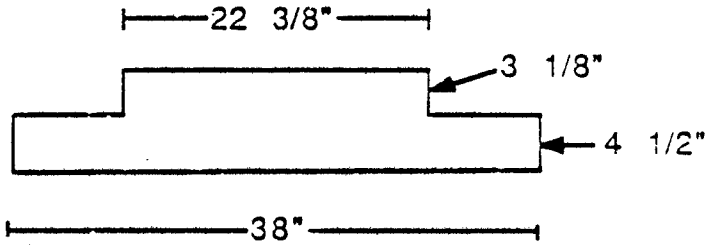

G) S.A.= 4.4 ft^2

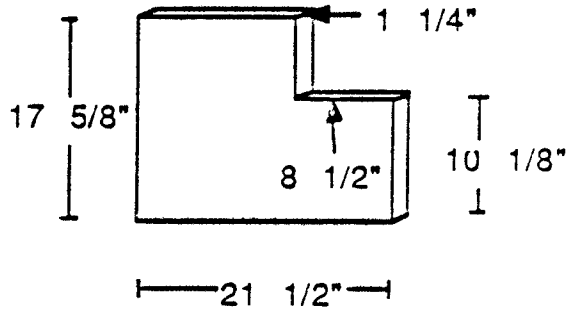

H) S.A.= 4.5 ft^2

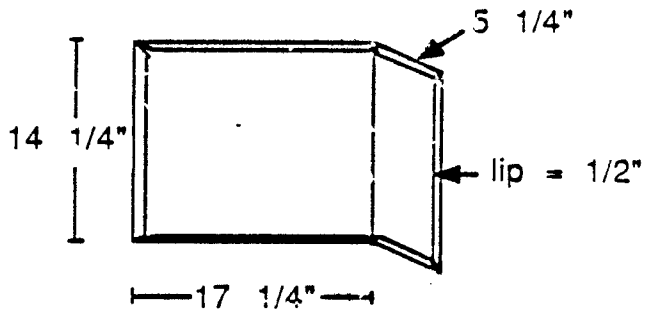

Table B-5 (Continued)
Panels
M2 Heater

I) S.A.= 1.3 ft^2

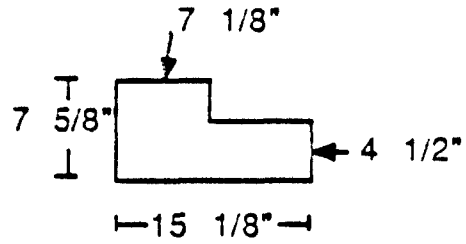

J) S.A.= 1.4 ft^2

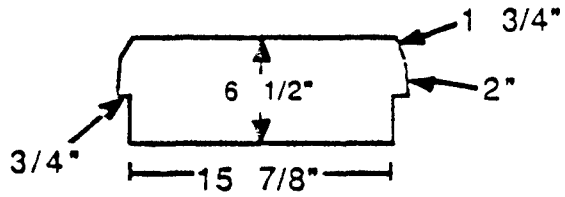

K) S.A.= 4.9 ft^2

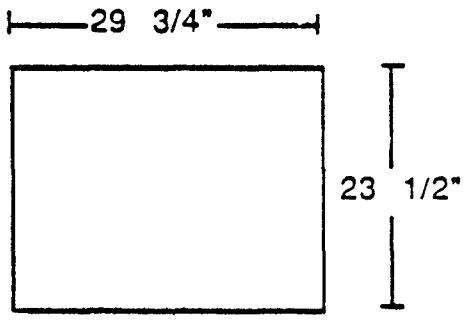

L) S.A.= 1.8 ft^2

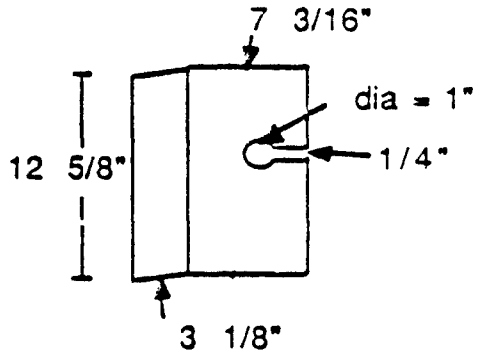

Table B-5 (Continued)
Panels
M2 Heater

M) S.A.= 8.2 ft^2

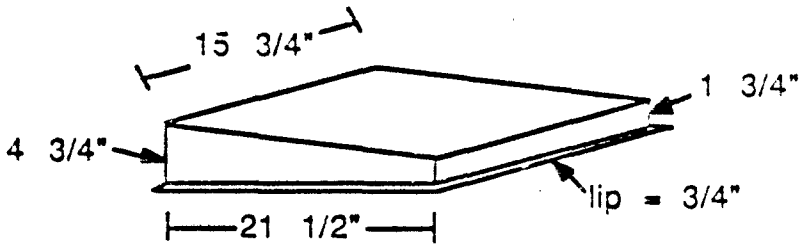

N) S.A.= 5.7 ft^2

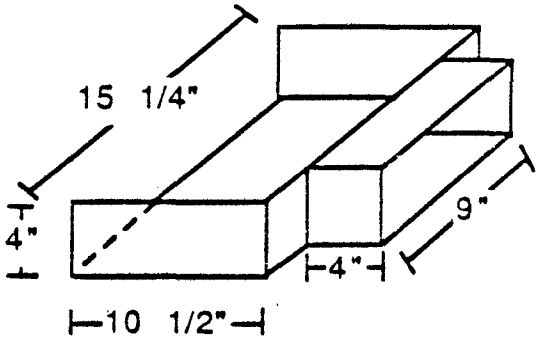

Table B-5 (Continued)
Panels
M2-12 Pump Unit

O) S.A.= 7.6 ft^2

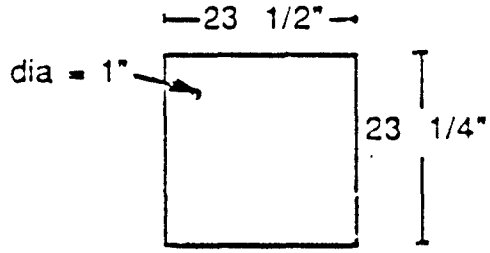

P) S.A.= 7.2 ft^2

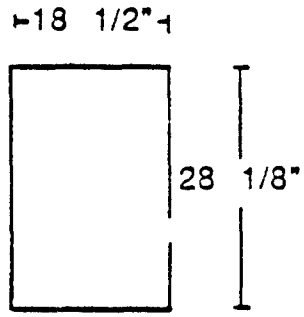

Q) S.A.= 6.1 ft^2

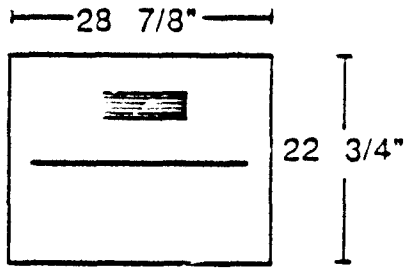

R) S.A.= 1.6 ft^2

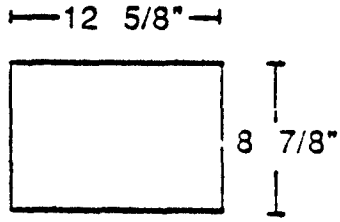

Table B-5 (Continued)
Panels
M2-12 Pump Unit

S) S.A.= 9.1 ft^2

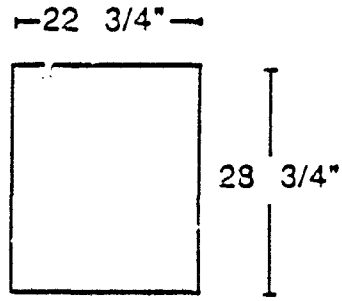

T) S.A.= 9.1 ft^2

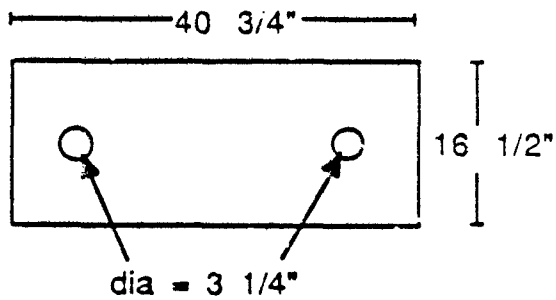

U) S.A.= 0.6 ft^2

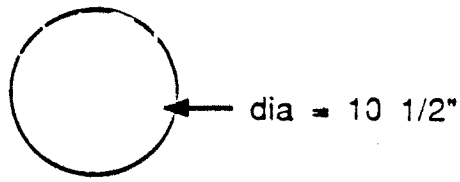

V) S.A.= 20.8 ft^2

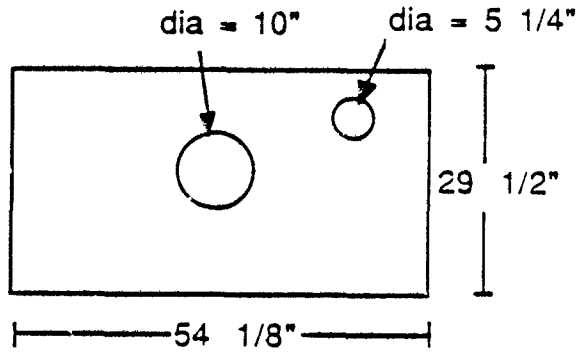

Table B-5 (Continued)
Panels
M2-12 Pump Unit

W) S.A.= 7.4 ft^2

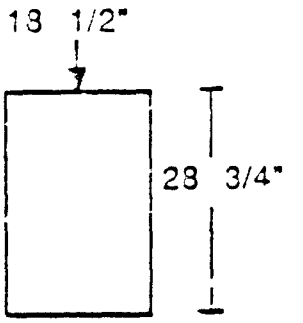

X) S.A.= 0.1 ft^2

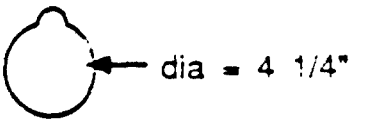

Y) S.A.= 9.3 ft^2

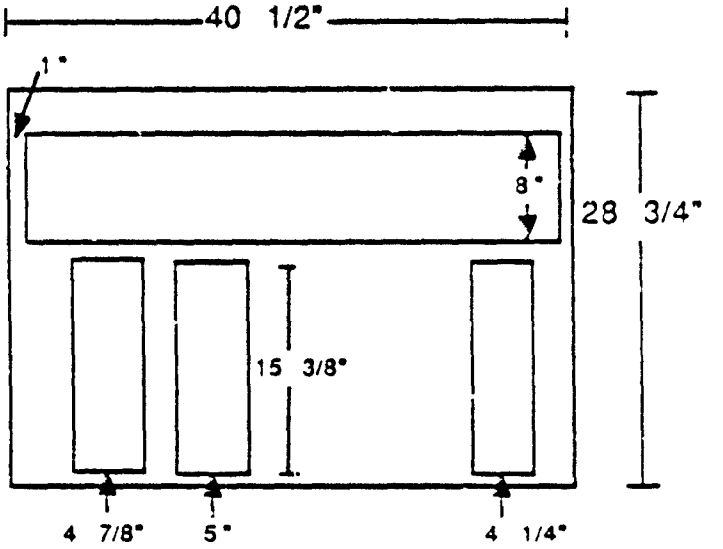

Z) S.A.= 1.0 ft^2

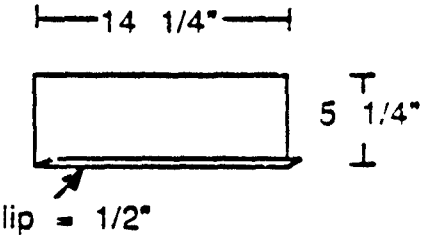

Table B-5 (Continued)
Panels
M2-12 Pump Unit

α A) S.A.= 6.9 ft^2

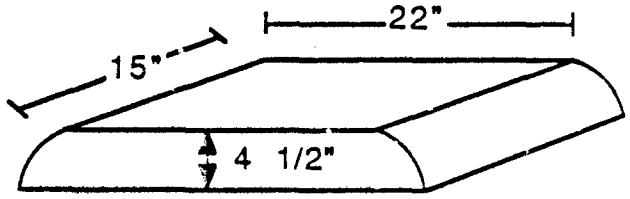

α B) S.A.= 0.3 ft^2

α C) S.A.= 4.4 ft^2

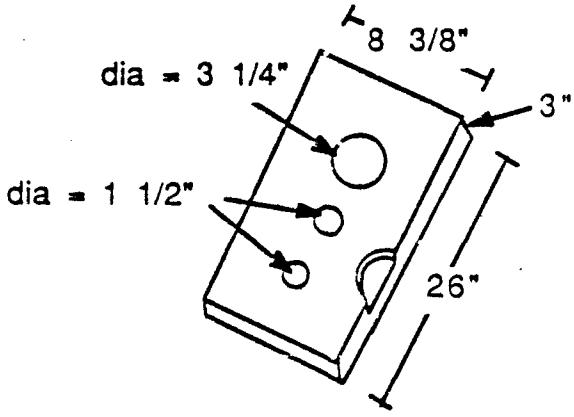

α D) S.A.= 10.7 ft^2

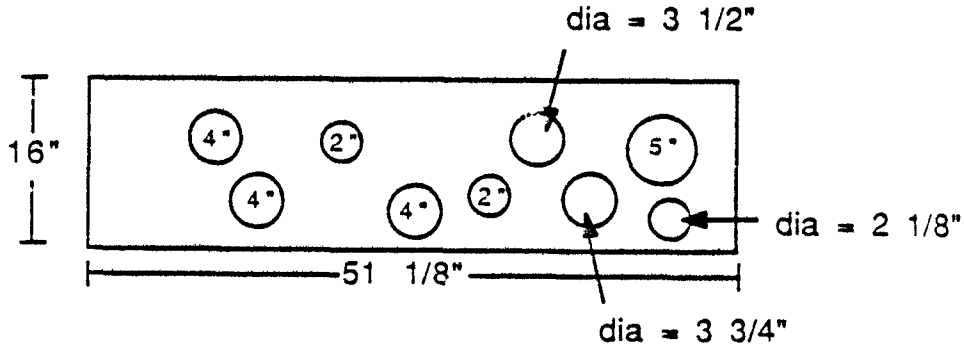

Arthur D Little

Table B-5 (Continued)
Panels
M2-12 Pump Unit

α E) S.A.= 6.1 ft^2

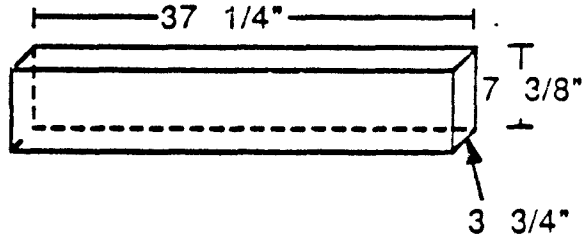

α F) S.A.= 1.2 ft^2

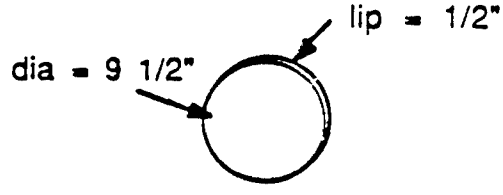

α G) S.A.= 7.3 ft^2

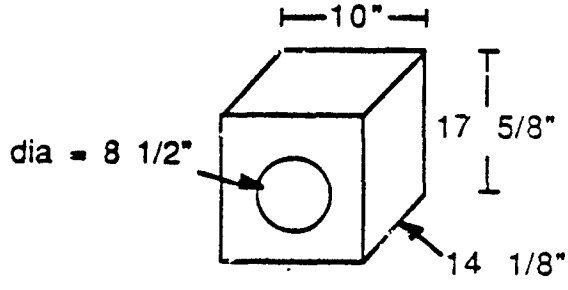

α H) S.A.= 2.5 ft^2

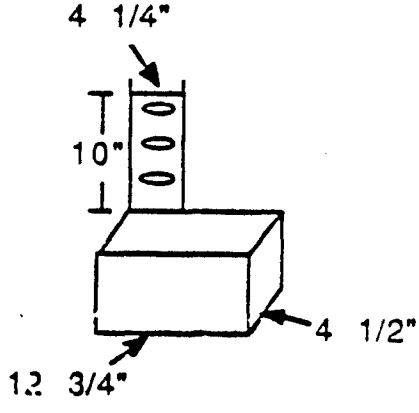

Table B-5 (Continued)
Panels
M2-12 Pump Unit

αI) S.A.= 3.7 ft^2

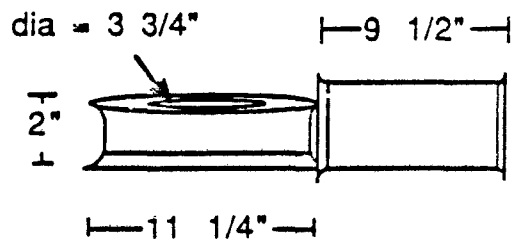

αJ) S.A.= 1.5 ft^2

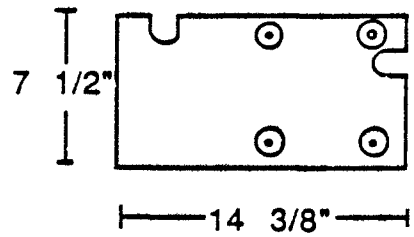

αK) S.A.= 3.0 ft^2

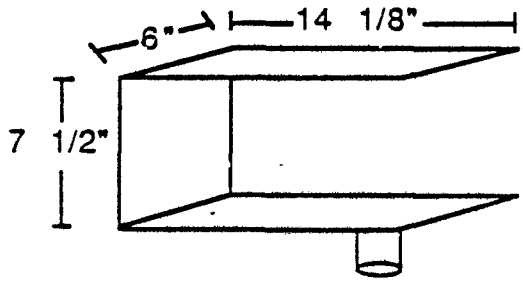

αL) S.A.= 0.4 ft^2

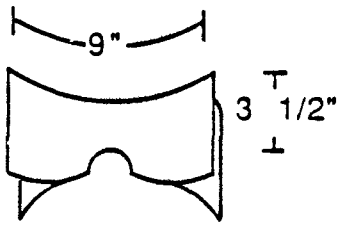

Table B-5 (Continued)
Panels
M2-12 Pump Unit

α M) S.A.= 1.5 ft^2

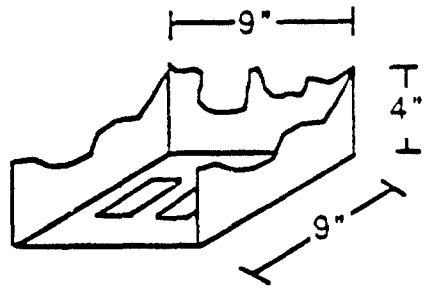

α N) S.A.= 1.5 ft^2

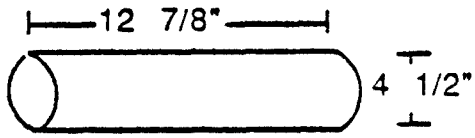

α O) S.A.= 0.2 ft^2

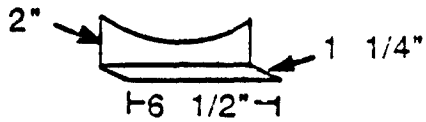

(a) S.A. = Painted Surface Area
Source: Arthur D. Little, Inc. and Letterkenny Army Depot

APPENDIX C

INSTRUMENT OPERATING INSTRUCTIONS

- Minitector
- Inspector Thickness Gage
- Ro-Tap Testing Sieve Shaker (Model B)

MINITECTOR 150

THICKNESS GAUGE

TYPE N

INSTRUCTION MANUAL

ELCOMETER INSTRUMENTS LIMITED,
EDGE LANE,
DROYLSDEN,
MANCHESTERE,
M35 6BU.
ENGLAND.

Tel: 061-370-7611
Telex: 668960

Manual Part Number

Arthur D Little

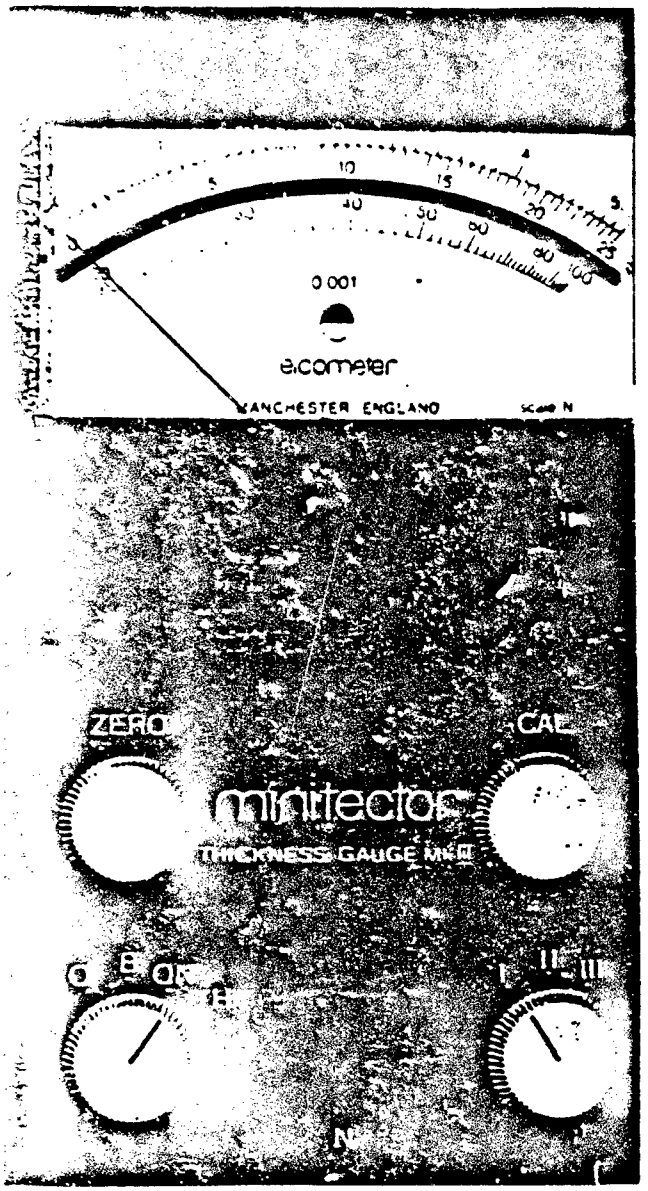

SECTION 1

Use of Controls:

1.1 Front Panel Controls
(See illustration 1)

1.1.1. Function Switch

O - Off
B - Battery Test Position
ON - Instrument in Operation
H - Hold facility
(optional extra)

1.1.2 Range Selection Switch

I - Scale I upper scale
II - Scale II centre scale
III - Scale III lower scale

1.1.3 Zero

Fine Zero adjusting control - ten turns; clockwise rotation increases meter reading.

1.1.4 Cal

Sensitivity control (meter full scale deflection) ten turns; clockwise rotation increases meter reading.

1.2 Rear Panel Controls

1.2.1 Zero I - II coarse zero control for scales I and II

1.2.2 Zero III - IV coarse zero control for scale III (scale IV for FN instrument only).

Both controls are turned clockwise looking at the back of the instrument to increase meter reading.

SECTION 2

Initial Checks:

2.1 Meter Zero

Before putting the instrument into operation, check that the meter reads mechanical zero. This can be adjusted by turning the screw located on the back of the instrument just below the battery compartment cover.

2.2 Fitting of Batteries

When the instrument leaves the factory, the batteries are packed separately and these must be put into the instrument before use. The battery compartment is located beneath the top hinged flap at the back of the instrument which can be lifted by inserting a coin or thumbnail in the slot at the top of the case.

The batteries should now be fitted, ensuring that the positive contact (+) corresponds with the contact marked (+) in the battery compartment.

2.3 Battery Check

Switch to the battery test position (indicated by the letter B). The pointer should read to the right of the battery mark B on the scale. If the reading is close to the mark or to the left of it, then both batteries must be replaced.

2.4 Probe Connection

The probe is plugged into the socket situated on the lower right hand side of the instrument case, making sure that the plug is pushed home firmly. Care must be taken when making this connection to ensure that locating assemblies match each other, otherwise damage can occur to the connection pins in the instrument case socket.

To remove, pull on the outer sleeve to slide it back and disengage the latch; the plug will then come out of the socket.

SECTION 3

Calibration:

3.1 Setting the Zero

Turn the range switch to the most sensitive range (Range 1) and switch the instrument on.

Place the probe on an uncoated piece of non-ferrous metallic material, ideally of the same finish, shape and composition as the coated material on which it is desired to make the measurement.

Adjust the zero control until the pointer reads zero, making sure that the pointer and its mirror image are in line.

Take several readings in the same area on the sample material and adjust the zero control so that the mean of the readings is zero.

3.2 Scales not Starting at Zero

Where the minimum thickness of a particular scale is not zero, a calibration foil should be selected from those supplied with the instrument of a thickness corresponding to the minimum reading of the scale.

N.B. The foils are only of nominal thickness and for maximum accuracy the actual thickness should be ascertained using a micrometer or similar instrument.

The appropriate calibration foil is now placed between the probe and the substrate and the zero control adjusted as before, until the instrument indicates the correct thickness. Again several readings should be taken and the zero control adjusted until mean of the readings is correct.

3.3 Coarse Zero

If the adjustment of the zero control is insufficient to obtain a correct reading, coarse zero controls are provided at the back of the instrument beneath the lower hinged flap.

To obtain the correct setting for these, turn the zero knob to its mid-position (5 turns from either end) and adjust the appropriate coarse zero control using a small screwdriver until the meter is reading correctly with the probe in contact with the substrate or foil as mentioned before.

The final zero adjustment can then be made using the front panel zero control.

3.4 Setting the Full-Scale Deflection

Select a foil corresponding to the maximum thickness of the scale being calibrated, again checking its actual thickness with a micrometer if maximum accuracy is to be obtained. Place the foil between the probe and the substrate and adjust the CAL control until the correct scale reading is obtained. Take several readings at the same point and adjust the CAL control until the mean of the readings is correct.

The calibaration should be rechecked at both ends of the scale and any necessary readjustments made until no further improvement can be obtained.

The instrument is now ready for use.

As the calibration procedure takes only a short time to complete, we recommend that it be done each time it is desired to use the instrument. Owing to the high stability of the electronic circuitry, negligible drift of meter reading may occur if repeated measurements on similar samples are being taken over long periods of time. Recalibration will be necessary, however, if any parameter of the substrate is changed, e.g., the surface finish or curvature.

INSPECTOR THICKNESS GAGE

OPERATING INSTRUCTIONS

OPERATING INSTRUCTIONS

1) Place gauge (see illustration) on clean, depainted ferrous surface, pressing end with magnet firmly on flat surface.

2) Turn scale to maximum reading (25 mils).

3) Keeping magnetic end firmly on surface, turn scale down until magnet pulls away from metal surface, making a "popping" sound. Using a screwdriver, adjust the Set Zero so the gauge reads zero for the depainted surface.

4) Repeat Steps 2 and 3 five times and take the average value to set the zero point.

5) For painted surface, keep magnetic end firmly on surface, turn scale to maximum reading (25 mils), turn scale down until magnet pulls away from metal surface, making a "popping" noise. Read scale for paint thickness (reading in mils).

6) Repeat Step 5 three times and take the average value to determine paint thickness.

GARDNER COMPANY

INSPECTOR THICKNESS GAGE

For measuring dry film thickness of any non-magnetic material on a ferrous base including paint, electroplating, porcelain enamel, rubber, plastic, asphalt, varnish, metal spraying, fiber glass, foils (placed on flat steel base) and many other coatings

NON-DESTRUCTIVE

MEASUREMENTS
at any angle.

LIGHT WEIGHT
only 8½ oz.

POCKET SIZE
2" x 1¼" x 9"

MODEL 111

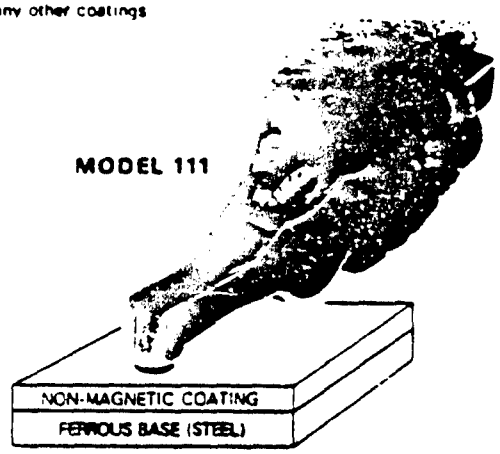

A rugged die cast aluminum case, containing a pivoted-arm assembly fitted with a permanent magnet at one end, the other end is fitted with a counter weight. A coil spring is attached to the pivot and to the calibrated scale ring.

PRINCIPLE OF OPERATION:

The magnet of the INSPECTOR is placed vertical to the surface. Variations in film thickness of the dried coating above the ferromagnetic base alter the attractive force of the magnet. This unknown force is determined by turning the scale ring by hand to apply tension to the spring. When the spring tension just exceeds the unknown magnetic attractive force, the magnet breaks contact with the coated surface. The film thickness is read directly from the calibrated scale, either in mils or microns.

Available in Three Scale Ranges:

111/A – A – INSPECTOR THICKNESS GAGE, 0-25 THOUSANDTHS (MILS).

111/B – B – INSPECTOR THICKNESS GAGE, 0-500 MICRONS.

111/C – C – INSPECTOR THICKNESS GAGE, 10 to 70 THOUSANDTHS (MILS).

SUPPLIED COMPLETE WITH LEATHER CASE, SHOULDER STRAP, WRIST STRAP, NON-PRECISION SHIMS AND INSTRUCTIONS . . . . . $115.00 each

PAUL N. GARDNER COMPANY
2250 S. E. 17th STREET
FORT LAUDERDALE, FLORIDA 33316
Phone (305) 522-1679

2-A

OPERATION, MAINTENANCE AND PARTS MANUAL

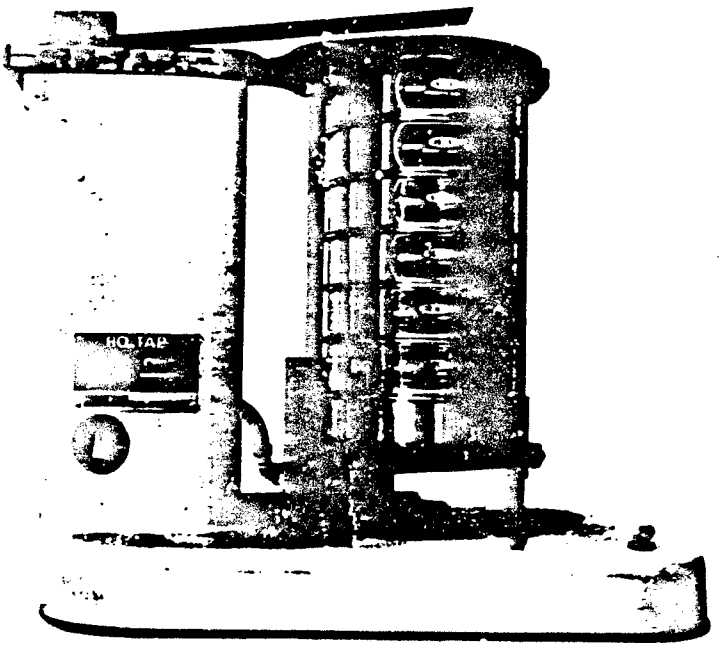

RO-TAP® TESTING SIEVE SHAKER
MODEL B

C-E Tyler
Combustion Engineering, Inc.

Post Office Box 775
Bessemer City, North Carolina, U.S.A. 28016

COMBUSTION ENGINEERING

C-9

Screening Machinery, Woven Wire Screens, Testing Sieves and Laboratory Equipment.

OPERATING INSTRUCTIONS

RO-TAP TESTING SIEVE SHAKER (Model B)

INSTALLATION

The unit should be mounted on a concrete foundation or a heavy wooden bench. Mounting of the shaker is accomplished by the use of two 3/8" dia. bolts. Two holes are drilled in the base to accommodate these bolts as shown on drawing R-50000.

Moderate tension of the bolts is all that is needed, since the rubber on the bottom of the base of the machine restricts the sliding of the machine.

Lag screws of carriage bolts may be used to mount the machine on a wooden bench.

LUBRICATION

The Ro-Tap Model B does not require any periodic lubrication as oil impregnated bronze and plastic are the two bearing materials used. Occasionally a drop of oil should be placed on all bearing surfaces to prevent the oil impregnated parts from drying out.

OPERATION

Assemble a nest of sieves with the coarsest sieve on top and a pan on the bottom, placing them on the sieve support plate. When installing the sieves the Hammer should be tilted up and out of the way. Place Sieve Cover with the cork installed (Items 16 and 27) on top the nest of sieves.

Adjust the sieve support clamp bar (Item 18) so that the upper edge of the sieve cover (Item 16) lines up exactly with the top of the upper edge of the carrying plate (Item 9). Adjusting the sieve cover height in this way and maintaining the hammer fall at the proper height maintains the accuracy of the test.

HAMMER DROP

With the cork installed in sieve cover (Item 16) adjust the length of the hammer drop

STARTING THE MACHINE

Plug the three prong cord into a standard outlet which has the same voltage as the motor. Turn the built-in timer switch to the right adjusting it for the length of the sieving test. The unit will automatically shut off at the end of the pre-determined sieving period.

PROCEDURE IN MAKING SIEVE ANALYSES

In establishing a procedure for standardization of sieve analyses we must consider the size or weight of sample to be tested, the length of sieving time, required accuracy of test, and the type of test--wet or dry.

SIZE OF SAMPLE TO BE TESTED

In determining the size or weight of a sample we must consider the type of material, its screenability, and the range of particle sizes present. For example, in making a sieve analysis of a material representing a feed to a screen or a product from a crusher in which the particle range is very wide, a large sample of from 500 up to 1,000 grams may be required. If the material to be tested is a finely ground product, a sample of 25 to 100 grams should be used.

There is a natural tendency to use too large a sample in the test. This is incorrect as in general the smaller the sample(properly taken), the more consistent the results. In order to obtain an accurate sieve test every particle must present itself to the screen openings for rejection or for passing through to the next finer sieve. If there are six or seven sieves in the nest, a fine mesh particle must repeat this operation six or seven times. If the sieves are overloaded, the fine mesh particle may never get a chance to get to its proper sieve. However, the sample should be large enough so that the first sieve retains enough particles to be representative.

The general rule in determining the size of a sample is that it be limited in weight so that no sieve in the series used in the analysis be overloaded. Overloading is most likely to occur in making analyses on closely graded materials where the range of particle size is confined to close limits. In this case the size of sample should be determined by the capacity, without overloading, of the sieve retaining the largest amount of the sample. Overloading of the sieves results in unreliable data as blinding of the meshes occurs on the heavily loaded sieve.

As an aid in determining the size of the sample, the following procedure is suggested:

Accurately split out on a sample splitter samples of varying weights--as for example, 25, 50, 100, 150 and 200 grams of the material. Then run these various samples on the sieves selected for a period of say five minutes. A comparison of these results will definitely show the correct size of sample to use.

For example, if the 100 gram sample shows approximately the same results in percentages retained and passing the sieves as the 50 gram sample, whereas the 150 gram sample shows less material through the finest sieve, this would be an indication that a 100 gram sample would be satisfactory for tests.

Near-mesh particles are those having dimensions which are close to the sieve opening and in order to secure analyses which are accurate, it is essential that the sieves be lightly loaded so that each of these near-mesh particles can be presented to the sieve opening many times and thus allow maximum opportunity for accurate classification.

TESTING SIEVES

For most sieve analysis tests the standard 8" diameter brass frame sieves should be used. The full height size (2" deep) is standard but if desired half height (1" deep) sieves are also available.

If possible full height sieves are recommended as the operator has to be very careful with half height sieves in the weighing operation as they are very susceptible to spilling and ruining the test.

The sieves are designed to nest together so that when all of the sieves are designed to nest together so that when all of the sieves used in the test are assembled together, a solid stack of sieves is obtained ready for hand sieving or mechanical sieving in the Ro-Tap Testing Sieve Shaker.

RO-TAP TESTING SIEVE SHAKER

The Ro-Tap Testing Sieve Shaker reproduces the circular and tapping motion given testing sieves in hand sieving, but with a uniform, mechanical action, producing dependable sizing tests.

The superiority of mechanical sieving, as performed by the Ro-Tap is plainly indicated by the results of the test which follows. A sample of finely ground low-grade copper ore was used. The material was free from lumps and contained much material which would ordinarily be referred to as "slime", "flour", or "dust". A 100 gram sample was obtained by means of a sample splitter.

Three tests of twenty minutes each were made with two Ro-Taps, the same sample being used for all three tests. Test No. 1 was run on Ro-Tap "A", Test No. 2 was a repetition of Test No. 1. Test No. 3 was a repetition of Test No. 1 but run on Ro-Tap "B". The result of these tests show that data obtained with Ro-Taps is comparable.

Opg. Micro-meter	U. S. A. No.	Tyler Mesh	Test No. 1 Ro-Tap "A" Per Cent Weight	Test No. 2 Ro-Tap "A" Per Cent Weight	Test No. 3 Ro-Tap "B" Per Cent Weight
600	30	28	33.4	33.5	33.7
425	40	35	18.1	18.0	18.0
300	50	48	11.0	11.1	11.1
212	70	65	8.2	8.2	8.2
150	100	100	7.2	7.3	7.2
75	200	200	9.3	9.4	9.4
	Pan	Pan	12.8	12.5	12.4

It will be seen that the results obtained in the three tests are in substantial agreement. A comparison of Test No. 1 with Test No. 2 shows that the machine will repeat results on the same sample, and a comparison of Test No. 1 and No. 2 with Test No. 3 shows that the sieving action of any two machines is practically identical.

With the regular height sieves, one sample can be tested on a series of six sieves of different openings, while, with the half height sieves, one sample can be analyzed on a series of thirteen sieves, and all with one operation.

By using pans with nesting skirts three different samples can be tested at one time with the regular height sieves, and seven different samples with the half-height sieves.

LENGTH OF SIEVING TIME

The time required for sieving in the Ro-Tap Testing Sieve Shaker is dependent upon the type of test desired. For example, in many instances for plant control operations a 3 to 5 minute test on a free sieving material is sufficient to give the desired data; whereas, on more difficult materials sieving time of from 10 to 30 minutes is justified.

If sieve tests are made for the purpose of determining whether or not the material meets with definite specifications, a longer period of sieving may be established. All interested parties, however, should agree and follow a standardized method as in only this way will their tests be comparable.

In determining the length of sieving time necessary it is suggested that three or four samples be cut out on a sample splitter to the weight which has been previously proven as satisfactory. One of these samples could then be sieved for a 5-minute period, one for 10 minutes, another for 15 and a fourth for a 20-minute sieving period. After tabulating these various results by percentages, the length of time necessary to stabilize the sieving action will be readily apparent, or in other words, a practical "end point" of sieving can be determined. A satisfactory "end point" is considered to have been reached when an additional period of sieving time fails to change the results on any of the sieves used in the analysis by more than 0.5% to 1.0%. In reporting sieve tests, calculations carried to 0.1% are the limit of accuracy justified except in very unusual cases.

WEIGHING THE SAMPLE

After completion of the agitation of the sieves the entire nest of sieves should be brought to the weighing station for recording of the analysis.

Weighing should always be done by grams and a balance having at least a capacity of 500 grams with a sensitivity of 1/10 gram is desirable.

If several extra pans are available it is best not to dicard this portion of the sample until the entire wiehging is completed. This same procedure should be repeated on all the sieves in the nest. The material passing through the finest sieve into the bottom pan must also be weighed to obtain total weight for percentage calculation and to permit a check against the original weight of sample. Te total weight of the material retained on the various sieves should be very close to the weight of the original sample.

The percent retained on each sieve is calculated merely by dividing the weight of the material retained on a particualr sieve by the weight of the original sample. The cumulative weight retained on the sieve and all coarser to it should also be calculated and entered in the proper column on the tabulating paper.

Most industries set up their specifications by the percent of material retained on a particular sieve, however, in some industries the percent passing a particular sieve is used.

The weight of the sample or the weight of the material retained on each sieve is never used for comparative purposes, but all results are expressed by the percentage of the total sample retained or passed through a particular sieve.

Using a spare bottom pan the material retained on the coarsest sieve should be dumped into the pan and the sieve inverted and placed over the pan. Then a soft brass wire brush or nylon bristle brush is used to gently brush the underside of the sieve using a circular motion, being careful not to exert too much pressure against the wire cloth.

In most every case virtually all the near mesh particles imbedded in the meshes can be removed by this dry brushing process. The sieve can then be raised from the pan and the side of the frame tapped by the handle of the brush to clean the remaining.

ASSISTANCE IN THE PROPER USE OF TESTING SIEVES

The American Society for Testing and Materials has available a publication on Test Sieving (STP-447). W. S. Tyler, Incorporated, 8200 Tyler Blvd., Mentor, Ohio 44060 has available a bulletin of Testing Sieves and Their Uses (Bulletin No. 53). For any specific assistance in the proper use of the Ro-Tap and the testing sieves please contact the Laboratory Equipment, Division of W. S. Tyler.

APPENDIX D

PART SPECIFICATIONS AND SURFACE AREA CALCULATIONS

- Table D-1 Smoke Generator Surface Area Calculations
- Table D-2 8V Engine (Model 95) Surface Area Calculations
- Table D-3 8V Engine (Model 96) Surface Area Calculations
- Table D-4 Total Surface Area Depainted Per Test Run: Test Series 1, 2 and 3
- Table D-5 Test Series 4: Equipment Parts and Blast Times
- Table D-6 Test Series 4: Surface Areas Depainted and Blast Times Per Run
- Table D-7 Test Series 4: Painted Panels and Blast Times
- Table D-8 Test Series 4: Unpainted Panels and Blast Times
- Table D-9 Index for Tables D-5 - D-7

TABLE D-1

SMOKE GENERATOR SURFACE AREA CALCULATION

(FOG OIL PUMP SETS (FOPS) AND TOOL BOXES)

DATE	TEST RUN NO.	FOPS(a) (quantity)	TOOLBOX (quantity)	FOPS SURFACE AREA (sq in)	TOOLBOX SURFACE AREA (sq in)	FOPS + TOOLBOX TOTAL SURFACE AREA (sq in)
12-17	1.0.0	8	1	3952	924	4876
12-18	1.0.1	4	0	1976	0	1976
1-4	1.0.2	0	11	0	10164	10164
1-5	1.0.3	0	1	0	924	924
1-6	1.0.4	0	2	0	1848	1848
1-7	1.0.5	6	1	2964	924	3888
1-15	1.0.6	1	2	494	1848	2342
1-25	1.0.7	1	3	494	2772	3266
1-8	1.1.0	0	13	0	12012	12012
1-11	1.1.1	2	3	988	2772	3760
1-12	1.1.2	2	3	988	2772	3760
1-13	1.1.3	1	3	494	2772	3266
1-14	1.1.4	2	3	988	2772	3760
2-3	2.0.0	1	2	494	1848	2342
1-27	2.0.1	2	2	988	1848	2836
1-26	2.0.2	0	1	0	924	924
2-8	2.0.3	2	3	988	2772	3760
2-22	2.0.4	2	3	988	2772	3760
2-23	2.0.5	2	3	988	2772	3760
3-28	2.0.6	2	3	988	2772	3760
1-28	2.0.7	2	3	988	2772	3760
2-9	2.0.8	2	3	988	2772	3760
2-4	2.0.9	2	3	988	2772	3760
2-25	2.1.0	2	3	988	2772	3760
2-24	2.1.1	3	3	1482	2772	4254
2-1	2.2.0	2	3	988	2772	3760
2-5	2.3.0	2	3	988	2772	3760
2-26	2.4.0	2	3	988	2772	3760
2-10	2.4.1	2	3	988	2772	3760
2-2	2.5.0	2	3	988	2772	3760
2-11	2.5.1	2	3	988	2772	3760
2-29	2.6.0	2	3	988	2772	3760
3-1	2.6.1	2	0	988	0	988
3-2	2.6.2	2	4	988	3696	4684
3-10	2.6.3	2	3	988	2772	3760
3-11	2.6.4	2	0	988	0	988
3-29	2.6.5	2	3	988	2772	3760
3-3	2.7.0	2	2	988	1848	2836
3-4	2.7.1	2	1	988	924	1912
3-7	2.7.2	5	2	2470	1848	4318
3-8	2.7.3	2.75	3	1359	2772	4130.5
3-9	2.7.4	4	3	1482	2772	4748
3-17	3.0.0	2	2	988	1848	2836
3-30	3.0.1	2	2	988	1848	2836
3-15	3.0.2	2	3	988	2772	3760
3-14	3.0.3	2	4	988	3696	4684
3-16	3.0.4	1.375	3	679.3	2772	3451
3-31	3.0.5	2	3	988	2772	3760
3-18	3.1.0	2	2	988	1848	2836
3-24	3.1.1	0	3	0	2772	2772
3-21	3.1.2	2	0	988	0	988
3-22	3.1.3	2	3	988	2772	3760
3-23	3.1.4	2	3	988	2772	3760
3-25	3.1.5	7	1	3458	924	4382
4-1	3.2.0	6	2	2964	1848	4812

(a) Each Fog Oil Pump Set consists of 8 parts
See Appendix B for part description

Source: Arthur D. Little, Inc.

Arthur D Little

TABLE D-2

8V ENGINE (MODEL 9[illegible]) SURFACE AREA CALCULATION

DATE	TEST RUN NO.	PART DESIGNATION (number depainted)												ⓐA–ⓐL TOTAL SURFACE AREA (sq in)
		ⓐA	ⓐB	ⓐC	ⓐD	ⓐE	ⓐF	ⓐG	ⓐH	ⓐI	ⓐJ	ⓐK	ⓐL	
12-17	1.0.0	0	0	0	0	0	0	0	0	0	0	0	0	0
12-18	1.0.1	0	0	0	0	0	0	0	0	0	0	0	0	0
1-4	1.0.2	0	0	0	0	0	0	0	0	0	0	0	0	0
1-5	1.0.3	0	0	0	0	0	0	0	0	0	0	0	0	0
1-6	1.0.4	0	0	0	0	0	0	0	0	0	0	0	0	0
1-7	1.0.5	0	0	0	0	0	0	0	0	0	0	0	0	0
1-15	1.0.6	1	2	2	2	2	3	2	2	5	1	2	2	2410
1-25	1.0.7	0	0	0	0	0	0	0	0	0	0	0	0	0
1-8	1.1.0	0	0	0	0	0	0	0	0	0	0	0	0	0
1-11	1.1.1	0	0	0	0	0	0	0	0	0	0	0	0	0
1-12	1.1.2	0	0	0	0	0	0	0	0	0	0	0	0	0
1-13	1.1.3	0	0	0	0	0	0	0	0	0	0	0	0	0
1-14	1.1.4	0	0	0	0	0	0	0	0	0	0	0	0	0
2-3	2.0.0	0	0	0	0	1	1	0	0	0	0	0	0	328
1-27	2.0.1	0	0	0	0	1	1	0	0	0	0	1	0	476
1-26	2.0.2	0	1	0	0	0	0	0	0	0	0	0	0	84
2-8	2.0.3	1	1	1	0	0	2	1	1	0	1	1	1	1067
2-22	2.0.4	1	1	1	1	1	1	2	0	0	0	0	1	926
2-23	2.0.5	0	0	0	0	0	0	0	0	0	1	0	0	42
3-28	2.0.6	2	1	2	2	0	1	1	3	0	2	3	2	1890
1-28	2.0.7	1	0	1	3	1	1	1	1	0	2	0	1	1026
2-9	2.0.8	1	2	3	4	1	1	4	2	1	1	2	2	2238
2-4	2.0.9	1	1	1	1	0	2	3	2	0	1	0	2	1438
2-25	2.1.0	0	0	0	0	0	0	0	0	0	0	0	0	0
2-24	2.1.1	2	0	1	0	1	1	1	1	0	1	1	1	1151
2-1	2.2.0	0	0	1	1	0	0	1	0	0	0	0	1	267
2-5	2.3.0	1	1	3	1	6	3	2	0	1	2	1	0	2481
2-26	2.4.0	0	0	0	0	0	0	0	0	0	0	0	0	0
2-10	2.4.1	0	0	0	0	0	0	0	1	0	0	0	0	173
2-2	2.5.0	0	0	0	0	0	0	0	1	0	0	0	0	173
2-11	2.5.1	1	1	1	1	1	1	1	1	1	0	1	1	1136
2-29	2.6.0	0	0	0	0	0	0	0	0	0	0	0	0	0
3-1	2.6.1	0	0	0	0	1	0	0	0	0	0	1	0	340
3-2	2.6.2	0	0	0	0	0	0	0	0	0	0	0	0	0
3-10	2.6.3	0	0	0	0	0	0	0	0	0	0	0	0	0
3-11	2.6.4	0	0	0	0	0	0	0	0	0	0	0	0	0
3-29	2.6.5	0	1	0	0	1	1	0	0	0	0	0	0	412
3-3	2.7.0	1	1	1	1	1	1	1	1	0	1	1	1	1154
3-4	2.7.1	0	0	0	0	0	0	0	0	0	0	0	0	0
3-7	2.7.2	0	0	0	0	0	0	0	0	0	0	0	0	0
3-8	2.7.3	0	0	0	0	0	0	0	0	0	0	0	0	0
3-9	2.7.4	0	0	0	0	0	0	0	0	0	0	0	9	405
3-17	3.0.0	1	0	1	0	0	0	2	1	0	1	1	1	846
3-30	3.0.1	2	2	2	2	1	1	3	2	0	2	1	2	1967
3-15	3.0.2	1	0	[illegible]	1	1	1	2	2	0	1	1	1	1378
3-14	3.0.3	0	0	0	0	0	0	0	0	0	0	0	0	0
3-16	3.0.4	1	0	1	0	0	1	0	0	0	0	1	1	497
3-31	3.0.5	1	1	0	1	1	1	1	1	0	1	1	1	1098
3-18	3.1.0	0	0	0	1	1	1	0	0	0	0	0	0	359
3-24	3.1.1	1	1	1	1	1	1	2	0	1	0	1	1	1098
3-21	3.1.2	0	0	0	1	1	0	0	0	0	0	0	0	223
3-22	3.1.3	0	0	0	0	0	0	0	0	0	0	0	0	0
3-23	3.1.4	0	0	0	0	0	0	0	0	0	0	0	0	0
3-25	3.1.5	0	0	0	0	0	0	0	0	0	0	0	0	0
4-1	3.2.0	0	0	0	0	0	0	0	0	0	0	0	0	0

Source: Arthur D. Little, Inc.

Arthur D Little

TABLE D-3

8V ENGINE (MODEL 96) SURFACE AREA CALCULATION

DATE	TEST RUN NO.	PART DESIGNATION A	B	C	D	E	F	G	H	I	J	K	L	M	N	O	P	Q	R	S	T	A-T Total Surface Area (sq in)
12-17	1.0.0	4	2	4	2	0	0	0	0	1	2	2	1	2	0	1	0	1	5	0	0	4038
12-18	1.0.1	2	2	0	2	0	1	0	0	0	2	2	1	0	0	0	0	1	2	0	0	3215
1-4	1.0.2	0	0	0	0	0	0	0	0	0	0	0	0	0	0	0	0	0	0	0	0	0
1-5	1.0.3	4	2	2	2	1	3	2	1	1	2	2	1	1	0	1	1	1	4	1	0	6054
1-6	1.0.4	8	4	4	4	1	1	0	2	1	1	1	2	2	0	2	0	2	11	1	2	5337
1-7	1.0.5	4	2	2	2	1	1	1	1	0	1	1	1	1	0	0	0	1	4	0	1	3035
1-15	1.0.6	4	2	1	2	1	0	0	0	0	0	0	0	0	0	0	0	0	1	0	0	500
1-25	1.0.7	8	4	3	4	2	2	2	2	1	3	2	2	2	0	2	1	2	5	1	2	8102
1-8	1.1.0	0	0	0	0	0	0	0	0	0	0	0	0	0	0	0	0	0	0	0	0	0
1-11	1.1.1	4	2	2	2	1	1	2	1	1	2	1	1	1	0	1	1	1	4	1	1	5005
1-12	1.1.2	4	2	2	2	1	0	0	2	1	1	1	1	2	0	0	0	2	5	2	0	3164
1-13	1.1.3	8	4	5	5	1	2	2	1	1	1	0	1	1	2	1	0	1	7	0	1	4595
1-14	1.1.4	4	2	3	2	2	0	2	1	0	2	2	0	1	2	0	0	1	5	1	0	4425
2-3	2.0.0	0	0	0	0	0	1	1	0	1	1	1	1	0	0	0	0	1	0	0	0	2091
1-27	2.0.1	6	2	0	0	0	1	1	1	0	0	0	0	1	0	0	0	0	0	1	0	1400
1-26	2.0.2	2	2	2	2	1	1	1	1	1	1	2	1	1	2	1	1	1	4	1	1	4863
2-8	2.0.3	0	0	3	2	0	2	2	0	0	1	1	0	1	2	0	0	0	5	0	0	3136
2-22	2.0.4	7	4	8	4	2	1	3	1	1	1	1	1	1	0	0	1	2	12	0	1	5209
2-23	2.0.5	0	5	0	2	0	2	1	0	0	2	2	1	1	2	1	1	1	1	0	1	5385
3-28	2.0.6	4	2	9	6	3	1	1	2	0	1	1	0	3	4	0	2	2	10	1	0	5623
1-28	2.0.7	4	2	5	4	2	1	2	2	0	1	0	1	1	2	0	1	3	9	4	1	5168
2-9	2.0.8	0	0	6	4	2	1	1	2	0	1	1	0	2	2	0	0	2	29	1	0	4521
2-4	2.0.9	8	4	5	5	2	1	1	1	0	1	1	0	2	4	0	0	1	7	2	0	4785
2-25	2.1.0	7	2	2	3	2	1	1	1	1	1	1	1	1	0	0	1	2	18	0	1	4364
2-24	2.1.1	12	2	4	4	3	2	1	1	0	1	1	0	1	0	0	2	1	12	0	1	4852
2-1	2.2.0	8	4	2	2	2	2	2	1	0	2	2	1	2	0	1	0	1	8	2	1	6214
2-5	2.3.0	4	2	0	0	1	0	0	2	0	1	1	0	0	5	0	0	1	7	1	0	2828
2-26	2.4.0	0	0	6	6	2	1	1	3	3	1	1	3	3	0	1	1	3	7	2	1	5705
2-10	2.4.1	4	2	1	2	1	2	2	2	1	1	1	1	1	0	1	0	1	0	1	1	4305
2-2	2.5.0	8	4	4	4	2	1	1	2	2	1	1	1	2	0	0	2	0	8	1	2	4777
2-11	2.5.1	8	4	6	4	2	1	1	1	0	1	1	0	1	1	0	0	1	10	0	4	4502
2-29	2.6.0	12	5	2	0	0	2	2	0	0	1	0	0	0	0	2	0	0	1	0	2	4005
3-1	2.6.1	0	0	2	2	0	1	1	2	0	1	2	2	2	0	0	1	2	10	0	7	5190
3-2	2.6.2	0	0	2	2	1	2	2	1	1	2	2	1	1	0	1	1	1	10	0	1	5588
3-10	2.6.3	4	2	2	2	1	1	1	4	3	2	0	1	5	6	1	0	3	18	0	5	6694
3-11	2.6.4	5	3	5	5	2	2	2	2	0	2	2	2	2	0	0	1	2	9	0	4	6666
3-29	2.6.5	5	2	0	0	0	1	3	0	0	1	1	0	0	0	0	0	0	6	0	1	3008
3-3	2.7.0	21	10	4	4	2	0	1	2	0	2	1	1	2	0	0	1	1	11	0	2	5624
3-4	2.7.1	12	6	6	6	2	2	3	3	1	2	2	3	3	0	1	3	4	8	0	2	9385
3-7	2.7.2	15	10	7	6	4	1	2	1	0	4	3	1	1	0	1	4	1	16	0	1	9958
3-8	2.7.3	12	6	5	6	3	2	3	1	1	3	3	3	3	0	2	2	3	17	2	2	10829
3-9	2.7.4	15	4	4	4	2	1	2	2	1	2	3	1	2	0	1	1	2	4	2	1	7508
3-17	3.0.0	13	5	12	7	3	3	2	3	1	3	3	2	3	2	1	0	2	14	0	4	9674
3-30	3.0.1	7	6	4	3	2	2	3	2	0	2	2	0	2	4	0	0	2	13	0	0	6671
3-15	3.0.2	8	4	5	4	2	2	1	2	0	2	2	1	2	2	0	0	3	13	0	2	6380
3-14	3.0.3	4	2	2	4	3	1	1	1	1	2	1	1	1	12	0	0	1	8	2	1	5779
3-16	3.0.4	14	7	6	5	3	2	3	3	0	2	2	2	3	1	2	2	3	12	2	3	9994
3-31	3.0.5	6	5	5	4	2	2	2	1	0	4	4	0	1	1	2	0	1	9	1	1	8851
3-18	3.1.0	12	5	5	6	3	2	3	2	2	2	3	2	2	0	2	3	1	13	1	2	9659
3-24	3.1.1	8	4	5	4	2	2	2	2	1	2	1	2	2	2	0	0	3	11	2	1	6433
3-21	3.1.2	16	9	4	4	2	5	4	1	1	4	3	3	1	0	1	2	1	8	0	3	10994
3-22	3.1.3	8	4	4	4	2	2	2	2	3	3	2	2	2	0	1	1	1	8	0	2	7350
3-23	3.1.4	11	5	6	6	3	4	3	3	3	2	3	2	2	0	4	5	2	31	1	2	13032
3-25	3.1.5	0	0	0	0	0	0	0	0	0	2	0	0	0	0	0	0	0	0	0	0	1080
4-1	3.2.0	0	0	0	0	0	0	0	0	0	2	0	0	0	0	0	0	0	0	0	0	1080

Source: Arthur D. Little, Inc.

Arthur D Little

TABLE D-4

TOTAL SURFACE AREA DEPAINTED PER TEST RUN: TEST SERIES 1,2, AND 3

DATE	TEST RUN NO.	TOTAL SURFACE AREA (sq in)
12-17	1.0.0	8914
12-18	1.0.1	5191
1-4	1.0.2	10134
1-5	1.0.3	6978
1-6	1.0.4	7185
1-7	1.0.5	6923
1-15	1.0.6	5252
1-25	1.0.7	11368
1-8	1.1.0	12012
1-11	1.1.1	8765
1-12	1.1.2	6924
1-13	1.1.3	7861
1-14	1.1.4	8185
2-3	2.0.0	4761
1-27	2.0.1	4712
1-26	2.0.2	5871
2-8	2.0.3	7963
2-22	2.0.4	9895
2-23	2.0.5	9216
3-28	2.0.6	11273
1-28	2.0.7	9954
2-9	2.0.8	10519
2-4	2.0.9	10130
2-25	2.1.0	8124
2-24	2.1.1	9651
2-1	2.2.0	10241
2-5	2.3.0	9269
2-26	2.4.0	9465
2-10	2.4.1	8238
2-2	2.5.0	8710
2-11	2.5.1	9398
2-29	2.6.0	7765
3-1	2.6.1	6518
3-2	2.6.2	10272
3-10	2.6.3	10454
3-11	2.6.4	7654
3-29	2.6.5	7180
3-3	2.7.0	9614
3-4	2.7.1	11297
3-7	2.7.2	14271
3-8	2.7.3	14960
3-9	2.7.4	12661
3-17	3.0.0	13356
3-30	3.0.1	11474
3-15	3.0.2	11518
3-14	3.0.3	10463
3-16	3.0.4	14115
3-31	3.0.5	13709
3-18	3.1.0	12854
3-24	3.1.1	10303
3-21	3.1.2	12205
3-22	3.1.3	11110
3-23	3.1.4	16792
3-25	3.1.5	5462
4-1	3.2.0	5892

Source: Arthur D. Little, Inc.

TABLE D 5

TEST SERIES 4: EQUIPMENT PARTS AND BLAST TIMES
(PARTS A-M)

TEST RUN NO.	Water Tanks		Final Drives				Containers												Hose Reels		Blenders(d)		WT Covers		Inside Final Drives	
	A(1)	A(2)	B(1)	B(2)	C(1)	C(2)	D(1)	D(2)	E(1)	E(2)	F(1)	F(2)	G(1)	G(2)	H(1)	H(2)	I(1)	I(2)	J(1)	J(2)	K(1)	K(2)	L(1)	L(2)	M(1)	M(2)
4.0.0 (a)	2.5	89	0	0	0	0	0	0	0	0	0	0	0	0	0	0	0	0	0	0	0	0	0	0	0	0
4.0.1	0.5	15	0	0	0	0	0	0	0	0	0	0	0.5	25	0	0	0	0	0	0	0	0	0	0	0	0
4.0.2	0	0	0	0	0	0	0	0	0	0	0	0	1.5	77	0	0	0	0	0	0	0	0	0	0	0	0
4.0.3	0	0	0	0	0	0	0	0	0	0	0	0	1	45	0	0	0	0	0	0	0	0	0	0	0	0
4.0.4	0	0	0	0	0	0	0	0	0	0	0	0	2	154	0	0	0	0	0	0	0	0	0	0	0	0
4.0.5	0	0	0	0	0	0	0	0	3	200	0	0	0	0	0	0	0	0	0	0	0	0	0	0	0	0
4.0.6	0	0	0	0	0	0	0	0	1	68	0	0	0	0	0	0	0	0	0	0	0	0	0	0	0	0
4.0.7	0	0	0	0	0	0	0	0	0	0	0	0	2	118	0	0	0	0	0	0	0	0	0	0	0	0
4.0.8	0	0	0	0	0	0	0	0	4	295	0	0	0	0	0	0	0	0	8	125	0	0	0	0	0	0
4.0.9	2	149	0	0	0	0	0	0	0	0	0	0	2	115	0	0	0	0	0	0	0	0	0	0	0	0
4.0.10	0	0	0	0	0	0	0	0	0	0	0	0	0	0	0	0	0	0	4	46	4	12	4	12	0	0
4.0.11	0	0	0	0	0	0	0	0	0	0	0	0	0	0	0	0	0	0	0	0	0	0	0	0	0	0
4.0.12	0	0	0	0	0	0	0	0	1	64	0	0	0	0	0	0	0	0	0	0	0	0	0	0	0	0
4.0.13	0	0	0	0	0	0	0	0	1	87	0	0	0	0	0	0	0	0	0	0	0	0	0	0	0	0
4.0.14	2	113	0	0	0	0	0	0	1	74	0	0	0	0	0	0	0	0	0	0	0	0	0	0	0	0
4.0.15	2	152	0	0	0	0	0	0	1	71	0	0	0	0	0	0	0	0	0	0	0	0	0	0	0	0
4.0.16	0	0	0	0	0	0	0	0	0	0	0	0	0	0	0	0	0	0	0	0	0	0	0	0	0	0
4.0.17	0	0	0	0	0	0	0	0	8	474	0	0	0	0	0	0	0	0	4	39	0	0	0	0	0	0
4.0.18	0	0	0	0	0	0	0	0	1	74	0	0	1	64	0	0	0	0	0	0	0	0	5	13	0	0
4.0.19	0	0	0	0	0	0	0	0	1	67	0	0	0	0	0	0	0	0	0	0	0	0	0	0	0	0
4.0.20	2	156	0	0	0	0	0	0	1	74	0	0	0	0	0	0	0	0	0	0	0	0	0	0	0	0
4.0.21	0	0	0	0	0	0	0	0	2	249	0	0	0	0	0	0	0	0	0	0	0	0	0	0	0	0
4.0.22	2	75	0	0	0	0	0	0	2	168	0	0	0	0	0	0	0	0	0	0	0	0	0	0	0	0
4.0.23	0	0	0	0	0	0	0	0	3	307	0	0	0	0	0	0	0	0	0	0	0	0	0	0	0	0
4.0.24	2	123	0	0	0	0	0	0	0	0	0	0	1	42	0	0	0	0	0	0	0	0	0	0	1	17
4.0.25	0	0	0	0	0	0	0	0	0	0	0	0	0	0	0	0	0	0	0	0	0	0	0	0	0	0
4.0.26	0	0	0	0	0	0	0	0	0	0	2	60	0	0	0	0	0	0	0	0	0	0	0	0	0	0
4.0.27	0	0	0	0	0	0	0	0	2	321	3	153	0	0	0	0	0	0	0	0	0	0	0	0	0	0
4.0.28	1	68	0	0	0	0	0	0	1	108	0	0	0	0	0	0	0	0	0	0	4	32	4	17	0	0
4.0.29	2	45	0	0	0	0	0	0	0	0	0	0	2	68	0	0	0	0	0	0	0	0	0	0	0	0
4.0.30	5	198	5	77	0	0	0	0	0	0	0	0	0	0	0	0	0	0	0	0	0	0	0	0	0	0
4.0.31	4	172	0	0	0	0	0	0	0	0	0	0	0	0	0	0	0	0	0	0	0	0	0	0	0	0
4.0.32	4	163	0	0	0	0	0	0	0	0	0	0	0	0	0	0	0	0	0	0	0	0	0	0	0	0
4.0.33	1	80	0	0	0	0	0	0	0	0	0	0	2	117	3	286	0	0	0	0	0	0	0	0	0	0
4.0.34	0	0	0	0	0	0	0	0	0	0	0	0	0	0	2	171	0	0	0	0	0	0	0	0	0	0
4.0.35	0	0	0	0	0	0	0	0	0	0	0	0	0	0	3	260	0	0	0	0	0	0	0	0	0	0
4.0.36	0	0	0	0	0	0	0	0	0	0	0	0	3	282	1	67	0	0	0	0	8	37	8	15	0	0
4.0.37	0	0	0	0	0	0	0	0	0	0	0	0	0	0	2	225	1	[illegible]	0	0	0	0	5	8	0	0
4.0.38	0	0	0	0	0	0	0	0	0	0	0	0	1	86	0	0	0	0	0	0	0	0	0	0	0	0
4.0.39	0	0	0	0	0	0	0	0	0	0	0	0	0	0	2	255	0	0	0	0	0	0	0	0	0	0
4.0.40	0	0	0	0	0	0	0	0	0	0	0	0	2	257	0	0	0	0	0	0	0	0	0	0	0	0
4.0.41	0	0	0	0	0	0	0	0	0	0	0	0	0	0	2	228	0	0	0	0	0	0	0	0	0	0
4.0.42	0	0	0	0	0	0	0	0	0	0	0	0	0	0	2	230	0	0	0	0	0	0	0	0	0	0
4.0.43	0	0	0	0	0	0	0	0	0	0	0	0	1	55	3	317	0	0	0	0	0	0	0	0	0	0
4.0.44	1	43	0	0	0	0	0	0	0	0	0	0	0	0	3	327	0	0	0	0	0	0	0	0	0	0
4.0.45	0	0	0	0	0	0	0	0	0	0	0	0	0	0	3	291	0	0	0	0	0	0	0	0	0	0

Arthur D Little

TABLE D-5 (continued)

TEST SERIES 4: EQUIPMENT PARTS AND BLAST TIMES
(PARTS N-aA)

TEST RUN NO.	Frames		Shelters		Projectiles				CAFIC						Door & Crills		Ration Boxes		Periscopes		Spades		Engine Covers				Fans	
	N(1)	N(2)	O(1)	O(2)	P(1)	P(2)	Q(1)	Q(2)	R(1)	R(2)	S(1)	S(2)	T(1)	T(2)	U(1)	U(2)	V(1)	V(2)	W(1)	W(2)	X(1)	X(2)	Y(1)	Y(2)	Z(1)	Z(2)	aA(1)	aA(2)
400 (a)	0	0	0	0	0	0	0	0	0	0	0	0	0	0	0	0	0	0	0	0	0	0	0	0	0	0	0	0
401	0	0	0	0	0	0	0	0	0	0	0	0	0	0	0	0	0	0	0	0	0	0	0	0	0	0	0	0
402	0	0	0	0	0	0	0	0	0	0	0	0	0	0	0	0	0	0	0	0	0	0	0	0	0	0	0	0
403	3	117	0	0	0	0	0	0	0	0	0	0	0	0	0	0	0	0	0	0	0	0	0	0	0	0	0	0
404	1	48	0	0	0	0	0	0	0	0	0	0	0	0	0	0	0	0	0	0	0	0	0	0	0	0	0	0
405	2	70	0	0	0	0	0	0	0	0	0	0	0	0	0	0	0	0	0	0	0	0	0	0	0	0	0	0
406	0	0	0	0	0	0	0	0	0	0	0	0	0	0	0	0	0	0	0	0	0	0	0	0	0	0	0	0
407	0	0	0	0	0	0	0	0	0	0	0	0	0	0	0	0	0	0	0	0	0	0	0	0	0	0	0	0
408	0	0	0	0	0	0	0	0	0	0	0	0	0	0	0	0	0	0	0	0	0	0	0	0	0	0	0	0
409	0	0	0	0	0	0	0	0	0	0	0	0	0	0	0	0	0	0	0	0	0	0	0	0	0	0	0	0
410	0	0	0	0	0	0	0	0	0	0	0	0	0	0	0	0	0	0	0	0	0	0	0	0	0	0	0	0
411	0	0	0	0	0	0	2	210	0	0	0	0	0	0	0	0	0	0	0	0	0	0	0	0	0	0	0	0
412	0	0	1	244	0	0	0	0	0	0	0	0	0	0	0	0	0	0	0	0	0	0	0	0	0	0	0	0
413	0	0	0	0	0	0	0	0	1	103	0	0	0	0	0	0	0	0	0	0	0	0	0	0	0	0	0	0
414	0	0	0	0	0	0	0	0	1	81	0	0	0	0	0	0	0	0	0	0	0	0	0	0	0	0	0	0
415	0	0	0	0	0	0	0	0	1	117	0	0	0	0	0	0	0	0	0	0	0	0	0	0	0	0	0	0
416	0	0	0	0	0	0	0	0	0	0	0	0	0	0	0	0	0	0	0	0	0	0	0	0	0	0	0	0
417	0	0	0	0	0	0	0	0	0	0	0	0	0	0	0	0	0	0	0	0	0	0	0	0	0	0	0	0
418	0	0	0	0	0	0	0	0	0	0	0	0	0	0	0	0	0	0	0	0	0	0	0	0	0	0	0	0
419	0	0	0	0	7	21	0	0	0	0	0	0	0	0	0	0	0	0	0	0	0	0	2	178	0	0	0	0
420	0	0	0	0	0	0	0	0	0	0	0	0	0	0	0	0	0	0	0	0	0	0	0	0	0	0	0	0
421	0	0	0	0	0	0	0	0	1	172	0	0	0	0	0	0	0	0	0	0	0	0	0	0	0	0	0	0
422	0	0	0	0	0	0	0	0	0	0	0	0	0	0	0	0	0	0	0	0	0	0	0	0	0	0	0	0
423	0	0	0	0	0	0	0	0	0	0	0	0	0	0	0	0	0	0	0	0	0	0	0	0	0	0	0	0
424	0	0	0	0	0	0	0	0	1	240	0	0	0	0	0	0	0	0	0	0	0	0	0	0	0	0	0	0
425	0	0	0	0	0	0	0	0	2	298	0	0	0	0	0	0	0	0	0	0	0	0	0	0	0	0	0	0
426	0	0	0	0	0	0	0	0	0	0	0	0	0	0	0	0	0	0	0	0	0	0	0	0	0	0	0	0
427	0	0	0	0	0	0	0	0	0	0	0	0	0	0	0	0	0	0	0	0	0	0	0	0	0	0	0	0
428	0	0	1	192	0	0	0	0	0	0	0	0	0	0	0	0	0	0	0	0	0	0	0	0	0	0	0	0
429	0	0	0	0	0	0	0	0	0	0	0	0	0	0	0	0	0	0	0	0	0	0	0	0	0	0	0	0
430	0	0	0	0	0	0	0	0	0	0	0	0	0	0	0	0	0	0	0	0	0	0	0	0	0	0	0	0
431	0	0	0	0	0	0	0	0	0	0	0	0	0	0	0	0	0	0	0	0	0	0	0	0	0	0	0	0
432	0	0	0	0	3	0	0	0	0	0	0	0	0	0	0	0	0	0	0	0	0	0	0	0	0	0	0	0
433	0	0	0	0	0	0	0	0	0	0	0	0	0	0	0	0	0	0	0	0	0	0	0	0	0	0	0	0
434	0	0	0	0	1	14	0	0	0	0	0	0	0	0	0	0	0	0	0	0	0	0	0	0	0	0	0	0
435	0	0	0	0	0	0	0	0	0	0	0	0	0	0	0	0	0	0	0	0	0	0	0	0	0	0	0	0
436	0	0	0	0	0	0	0	0	0	0	0	0	0	0	0	0	0	0	0	0	0	0	0	0	0	0	2	15
437	0	0	0	0	0	0	0	0	0	0	0	0	0	0	0	0	0	0	0	0	0	0	0	0	0	0	2	26
438	0	0	0	0	0	0	0	0	0	0	0	0	0	0	0	0	0	0	0	0	0	0	0	0	0	0	0	0
439	0	0	0	0	0	0	0	0	0	0	0	0	0	0	0	0	0	0	0	0	0	0	0	0	0	0	0	0
440	0	0	0	0	0	0	0	0	0	0	0	0	0	0	0	0	0	0	0	0	0	0	0	0	0	0	0	0
441	0	0	0	0	0	0	0	0	0	0	0	0	0	0	0	0	0	0	0	0	0	0	0	0	0	0	0	0
442	0	0	0	0	0	0	0	0	0	0	0	0	0	0	0	0	0	0	0	0	0	0	1	30	1	18	1	24
443	0	0	0	0	0	0	0	0	0	0	0	0	0	0	0	0	0	0	0	0	0	0	0	0	0	0	2	26
444	0	0	0	0	0	0	0	0	0	0	0	0	0	0	0	0	0	0	0	0	0	0	0	0	0	0	0	0
445	0	0	0	0	4	22	0	0	0	0	0	0	0	0	0	0	0	0	0	0	0	0	0	0	0	0	0	0

Arthur D Little

TABLE D-8 (continued)

TEST SERIES 4: EQUIPMENT PARTS AND BLAST TIMES
(PARTS A-M)

TEST RUN NO.	Water Tanks		Final Drives				Containers												Hose Reels		Blanders(d)		WT Covers		Inside Final Drives	
	A(1)	A(2)	B(1)	B(2)	C(1)	C(2)	D(1)	D(2)	E(1)	E(2)	F(1)	F(2)	G(1)	G(2)	H(1)	H(2)	I(1)	I(2)	J(1)	J(2)	K(1)	K(2)	L(1)	L(2)	M(1)	M(2)
4.1.0 (b)	0	0	0	0	0	0	0	0	2	167	0	0	0	0	0	0	0	0	0	0	0	0	0	0	0	0
4.1.1	1	47	0	0	0	0	0	0	1	107	0	0	0	0	0	0	0	0	0	0	0	0	0	0	0	0
4.1.2	1	67	0	0	0	0	0	0	1	203	0	0	0	0	0	0	0	0	0	0	0	0	0	0	0	0
4.1.3	1	75	0	0	0	0	0	0	1	192	0	0	0	0	0	0	0	0	0	0	0	0	0	0	0	0
4.1.4	0	0	0	0	0	0	0	0	2	310	0	0	0	0	0	0	0	0	0	0	0	0	0	0	0	0
4.1.5	0	0	0	0	0	0	0	0	1	192	0	0	0	0	0	0	0	0	0	0	0	0	0	0	0	0
4.1.6	0	0	0	0	0	0	0	0	4	357	0	0	0	0	0	0	0	0	0	0	0	0	0	0	0	0
4.1.7	0	0	0	0	0	0	0	0	0	0	0	0	3	280	0	0	0	0	0	0	0	0	0	0	0	0
4.1.8	0	0	0	0	0	0	0	0	0	0	0	0	4	397	0	0	0	0	0	0	0	0	0	0	0	0
4.1.9	0	0	0	0	0	0	0	0	0	0	0	0	2	148	0	0	3	118	0	0	0	0	0	0	0	0
4.1.10	2	87	0	0	0	0	0	0	0	0	0	0	0	0	0	0	0	0	0	0	0	0	0	0	0	0
4.1.11	1	34	0	0	3	95	0	0	1	73	0	0	5	359	0	0	0	0	0	0	0	0	0	0	0	0
4.1.12	1	92	0	0	2	45	0	0	2	185	0	0	0	0	0	0	0	0	0	0	0	0	0	0	0	0
4.1.13	1	30	0	0	0	0	0	0	0	0	0	0	0	0	0	0	0	0	0	0	0	0	0	0	0	0
4.1.14	0	0	0	0	0	0	0	0	0	0	3	191	0	0	0	0	0	0	0	0	0	0	0	0	0	0
4.1.15	0	0	2	83	0	0	0	0	0	0	0	0	0	0	0	0	0	0	0	0	0	0	0	0	0	0
4.2.0 (c)	0	0	0	0	0	0	0	0	0	0	0	0	2	150	1	90	0	0	0	0	0	0	0	0	0	0
4.2.1	0	0	1	25	0	0	0	0	0	0	0	0	3	213	0	0	0	0	0	0	0	0	0	0	0	0
4.2.2	0	0	0	0	0	0	0	0	0	0	0	0	2	240	0	0	0	0	0	0	4	38	8	33	0	0
4.2.3	0	0	0	0	0	0	0	0	0	0	0	0	2	194	0	0	0	0	0	0	8	33	0	0	0	0
4.2.4	0	0	0	0	0	0	0	0	0	0	0	0	3	246	0	0	0	0	0	0	0	0	0	0	0	0
4.2.5	0	0	2	78	0	0	0	0	0	0	0	0	2	182	0	0	0	0	2	17	2	33	0	0	0	0
4.2.6	1	48	0	0	0	0	0	0	0	0	0	0	3	271	0	0	0	0	2	10	0	0	0	0	0	0
4.2.7	0	0	0	0	0	0	0	0	0	0	0	0	0	0	2	217	0	0	0	0	0	0	0	0	0	0

TABLE D-6 (continued)

TEST SERIES 4: EQUIPMENT PARTS AND BLAST TIMES
(PARTS N-6A)

TEST RUN NO.	Frames		Shelters		Projectiles		CARC								Door & Grills		Ribbon Boxes		Pedestals		Spades		Engine Covers				Fans	
	N(1)	N(2)	O(1)	O(2)	P(1)	P(2)	Q(1)	Q(2)	R(1)	R(2)	S(1)	S(2)	T(1)	T(2)	U(1)	U(2)	V(1)	V(2)	W(1)	W(2)	X(1)	X(2)	Y(1)	Y(2)	Z(1)	Z(2)	aA(1)	aA(2)
4 1 0 (b)	0	0	0	0	0	0	0	0	0	0	0	0	0	0	0	0	0	0	0	0	0	0	0	0	0	0	0	0
4 1 1	0	0	0	0	1	10	0	0	0	0	0	0	0	0	0	0	0	0	0	0	0	0	1	24	1	12	0	0
4 1 2	0	0	0	0	0	0	0	0	0	0	0	0	0	0	0	0	0	0	0	0	0	0	1	81	0	0	0	0
4 1 3	0	0	0	0	0	0	0	0	0	0	0	0	0	0	0	0	0	0	0	0	0	0	0	0	0	0	0	0
4 1 4	0	0	0	0	0	0	0	0	0	0	0	0	0	0	0	0	0	0	0	0	0	0	0	0	0	0	0	0
4 1 5	0	0	0	0	0	0	0	0	0	0	0	0	0	0	0	0	0	0	0	0	0	0	0	0	0	0	0	0
4 1 6	0	0	0	0	0	0	0	0	0	0	0	0	0	0	0	0	0	0	0	0	0	0	0	0	0	0	0	0
4 1 7	0	0	0	0	0	0	0	0	0	0	0	0	0	0	0	0	0	0	0	0	0	0	0	0	0	0	0	0
4 1 8	0	0	0	0	0	0	0	0	0	0	0	0	0	0	0	0	0	0	0	0	0	0	0	0	0	0	0	0
4 1 9	0	0	0	0	0	0	0	0	0	0	0	0	0	0	1	8	1	11	1	5	2	45	0	0	0	0	0	0
4 1 10	0	0	0	0	0	0	0	0	0	0	0	0	0	0	0	0	0	0	0	0	0	0	0	0	0	0	0	0
4 1 11	0	0	0	0	0	0	0	0	0	0	0	0	0	0	0	0	0	0	0	0	0	0	0	0	0	0	0	0
4 1 12	0	0	0	0	0	0	0	0	0	0	0	0	0	0	0	0	0	0	0	0	0	0	0	0	0	0	0	0
4 1 13	0	0	0	0	0	0	0	0	0	0	4	280	0	0	1	20	0	0	0	0	2	30	0	0	0	0	0	0
4 1 14	0	0	0	0	1	0	0	0	0	0	0	0	0	0	0	0	0	0	0	0	0	0	0	0	0	0	0	0
4 1 15	0	0	0	0	0	0	0	0	0	0	1	81	0	0	0	0	0	0	0	0	0	0	0	0	0	0	0	0
4 2 0 (c)	0	0	0	0	0	0	0	0	0	0	0	0	0	0	0	0	0	0	0	0	0	0	0	0	0	0	0	0
4 2 1	0	0	0	0	0	0	0	0	0	0	0	0	0	0	0	0	0	0	0	0	0	0	0	0	0	0	0	0
4 2 2	0	0	0	0	0	0	0	0	0	0	0	0	0	0	0	0	0	0	0	0	0	0	0	0	0	0	0	0
4 2 3	0	0	0	0	0	0	0	0	0	0	0	0	0	0	0	0	0	0	0	0	0	0	0	0	0	0	0	0
4 2 4	0	0	0	0	0	0	0	0	0	0	0	0	0	0	0	0	0	0	0	0	0	0	0	0	0	0	0	0
4 2 5	0	0	0	0	0	0	0	0	0	0	0	0	0	0	0	0	0	0	0	0	0	0	0	0	0	0	2	3
4 2 6	0	0	0	0	0	0	0	0	0	0	0	0	0	0	0	0	0	0	0	0	0	0	0	0	0	0	0	0
4 2 7	0	0	0	0	0	0	0	0	0	0	1	42	1	45	0	0	0	0	0	0	0	0	0	0	0	0	0	0

(a) Media: Composition Materials Plast-Gnt PG 3 Hard (test runs 4 0 0 to 4 0 29)
(b) Media: Walnut shells (test runs 4 1 0 to 4 1 2)
(c) Media: 80% Composition Materials Plast-Gnt PG 3 Hard and 20% Glass beads (40-80 mesh)
(d) Unpainted
(1) = Number of parts
(2) = Depainting time (min)

Source: Arthur D Little, Inc

Arthur D Little

TABLE D-6

TEST SERIES 4: SURFACE AREAS DEPAINTED AND BLAST TIMES PER RUN

TEST RUN NO.	WATER TANKS SURF AREA (sq ft)	WATER TANKS TIME (min)	LARGE CONTAINERS SURF AREA (sq ft)	LARGE CONTAINERS TIME (min)	FRAME ASSEMBLIES SURF AREA (sq ft)	FRAME ASSEMBLIES TIME (min)	UNPAINTED MED SIZE PARTS(d) SURF AREA (sq ft)	UNPAINTED MED SIZE PARTS(d) TIME (min)	SHELTERS SURF AREA (sq ft)	SHELTERS TIME (min)	PROJECTILES SURF AREA (sq ft)	PROJECTILES TIME (min)	MED SIZE PARTS SURF AREA (sq ft)	MED SIZE PARTS TIME (min)	CANC CONTAIN SURF AREA (sq ft)	CANC CONTAIN TIME (min)
4.0.0 (a)	246	89	0	0	0	0	0	0	0	0	0	0	0	0	0	0
4.0.1	49	15	91	25	0	0	0	0	0	0	0	0	0	0	0	0
4.0.2	0	0	273	77	0	0	0	0	0	0	0	0	0	0	0	0
4.0.3	0	0	182	45	42	117	0	0	0	0	0	0	0	0	0	0
4.0.4	0	0	364	154	14	48	0	0	0	0	0	0	0	0	0	0
4.0.5	0	0	777	200	28	70	0	0	0	0	0	0	0	0	0	0
4.0.6	0	0	259	68	0	0	0	0	0	0	0	0	0	0	0	0
4.0.7	0	0	364	119	0	0	0	0	0	0	0	0	0	0	0	0
4.0.8	0	0	1038	295	0	0	0	0	0	0	0	0	88	125	0	0
4.0.9	196	149	364	115	0	0	0	0	0	0	0	0	0	0	0	0
4.0.10	0	0	0	0	0	0	45	12	0	0	0	0	54	58	0	0
4.0.11	0	0	0	0	0	0	0	0	0	0	0	0	0	0	508	210
4.0.12	0	0	259	64	0	0	0	0	538	244	0	0	0	0	0	0
4.0.13	0	0	259	87	0	0	0	0	0	0	0	0	0	0	259	103
4.0.14	196	113	259	74	0	0	0	0	0	0	0	0	0	0	259	91
4.0.15	196	152	259	71	0	0	0	0	0	0	0	0	0	0	259	117
4.0.16	0	0	0	0	0	0	0	0	0	0	0	0	0	0	0	0
4.0.17	0	0	1554	474	0	0	0	0	0	0	0	0	44	39	0	0
4.0.18	0	0	441	138	0	0	0	0	0	0	0	0	12	13	0	0
4.0.19	0	0	259	87	0	0	0	0	0	0	28	21	41	176	0	0
4.0.20	196	158	259	74	0	0	0	0	0	0	0	0	0	0	0	0
4.0.21	0	0	518	249	0	0	0	0	0	0	0	0	0	0	259	172
4.0.22	196	75	518	188	0	0	0	0	0	0	0	0	0	0	0	0
4.0.23	0	0	777	307	0	0	0	0	0	0	0	0	0	0	0	0
4.0.24	196	123	182	42	5	17	0	0	0	0	0	0	0	0	259	240
4.0.25	0	0	0	0	0	0	0	0	0	0	0	0	0	0	518	298
4.0.26	0	0	276	60	0	0	0	0	0	0	0	0	0	0	0	0
4.0.27	0	0	932	474	0	0	0	0	0	0	0	0	0	0	0	0
4.0.28	98	88	259	108	0	0	45	32	538	192	0	0	10	17	0	0
4.0.29	196	45	364	69	0	0	0	0	0	0	0	0	0	0	0	0
4.0.30	491	198	314	77	0	0	0	0	0	0	0	0	0	0	0	0
4.0.31	393	172	0	0	0	0	0	0	0	0	0	0	0	0	0	0
4.0.32	393	163	0	0	0	0	0	0	0	0	0	0	0	0	0	0
4.0.33	98	60	1192	403	0	0	0	0	0	0	0	0	0	0	0	0
4.0.34	0	0	552	171	0	0	0	0	0	0	4	14	0	0	0	0
4.0.35	0	0	828	260	0	0	0	0	0	0	0	0	0	0	0	0
4.0.36	0	0	822	349	0	0	90	37	0	0	0	0	55	30	0	0
4.0.37	0	0	584	246	0	0	0	0	0	0	0	0	48	38	0	0
4.0.38	0	0	182	86	0	0	0	0	0	0	0	0	0	0	0	0
4.0.39	0	0	552	255	0	0	0	0	0	0	0	0	0	0	0	0
4.0.40	0	0	364	257	0	0	0	0	0	0	0	0	0	0	0	0
4.0.41	0	0	552	228	0	0	0	0	0	0	0	0	0	0	0	0
4.0.42	0	0	552	230	0	0	0	0	0	0	0	0	54	72	0	0
4.0.43	0	0	1010	372	0	0	0	0	0	0	0	0	36	29	0	0
4.0.44	98	43	823	327	0	0	0	0	0	0	0	0	0	0	0	0
4.0.45	0	0	828	291	0	0	0	0	0	0	16	22	0	0	0	0

Arthur D Little

TABLE D-8 (continued)

TEST SERIES 4: SURFACE AREAS DEPAINTED AND BLAST TIMES PER RUN

TEST RUN NO.	WATER TANKS SURF AREA (sq ft)	WATER TANKS TIME (min)	LARGE CONTAINERS SURF AREA (sq ft)	LARGE CONTAINERS TIME (min)	FRAME ASSEMBLIES SURF AREA (sq ft)	FRAME ASSEMBLIES TIME (min)	UNPAINTED MED SIZE PARTS(d) SURF AREA (sq ft)	UNPAINTED MED SIZE PARTS(d) TIME (min)	SHELTERS SURF AREA (sq ft)	SHELTERS TIME (min)	PROJECTILES SURF AREA (sq ft)	PROJECTILES TIME (min)	MED SIZE PARTS SURF AREA (sq ft)	MED SIZE PARTS TIME (min)	CARC CONTAIN SURF AREA (sq ft)	CARC CONTAIN TIME (min)
4.1.0(b)	0	0	518	187	0	0	0	0	0	0	0	0	0	0	0	0
4.1.1	98	47	259	107	0	0	0	0	0	0	4	10	38	38	0	0
4.1.2	98	87	259	203	0	0	0	0	0	0	0	0	21	61	0	0
4.1.3	98	76	259	192	0	0	0	0	0	0	0	0	0	0	0	0
4.1.4	0	0	518	310	0	0	0	0	0	0	0	0	0	0	0	0
4.1.5	0	0	259	192	0	0	0	0	0	0	0	0	0	0	0	0
4.1.6	0	0	1036	357	0	0	0	0	0	0	0	0	0	0	0	0
4.1.7	0	0	546	280	0	0	0	0	0	0	0	0	0	0	0	0
4.1.8	0	0	728	397	0	0	0	0	0	0	0	0	0	0	0	0
4.1.9	0	0	460	266	0	0	0	0	0	0	0	0	51	70	0	0
4.1.10	198	87	0	0	0	0	0	0	0	0	0	0	0	0	0	0
4.1.11	98	34	1702	527	0	0	0	0	0	0	0	0	0	0	0	0
4.1.12	98	92	873	230	0	0	0	0	0	0	0	0	0	0	0	0
4.1.13	98	30	0	0	0	0	0	0	0	0	0	0	33	50	552	283
4.1.14	0	0	414	191	0	0	0	0	0	0	4	8	0	0	0	0
4.1.15	0	0	128	83	0	0	0	0	0	0	0	0	0	0	138	81
4.2.0(c)	0	0	640	240	0	0	0	0	0	0	0	0	0	0	0	0
4.2.1	0	0	809	238	0	0	0	0	0	0	0	0	0	0	0	0
4.2.2	0	0	384	240	0	0	45	36	0	0	0	0	18	33	0	0
4.2.3	0	0	384	194	0	0	90	33	0	0	0	0	0	0	0	0
4.2.4	0	0	546	246	0	0	0	0	0	0	0	0	0	0	0	0
4.2.5	0	0	490	260	0	0	22	33	0	0	0	0	22	17	0	0
4.2.6	98	48	546	271	0	0	0	0	0	0	0	0	58	48	0	0
4.2.7	0	0	552	217	0	0	0	0	0	0	0	0	0	0	201	87

(a) Media: Composition Materials Plast-Grit PG 3 Hard (test runs 4.0.0 to 4.0.29)
(b) Media: Walnut shells (test runs 4.1.0 to 4.1.2)
(c) Media: 80% Composition Materials PlastiGrit PG 3 Hard and 20% Glass beads (40-60 mesh)
(d) Unpainted parts include blenders

Source: Arthur D. Little, Inc.

TABLE D-7

TEST SERIES 4: PAINTED PANELS AND BLAST TIMES

TEST RUN NO.	NUMBER OF PANELS DEPAINTED																					
	A(b)	B	C	D	E	F	G	H	I	J	K	L	M	N	O	P	Q	R	S	T	U	V
4.0.10	5	4	2	5	3	3	3	2	5	1	5	1	0	0	1	1	1	1	1	1	0	0
4.0.13	0	0	0	0	0	0	0	0	0	0	0	0	0	0	0	1	0	0	0	1	0	0
4.0.16	0	0	0	0	0	0	0	0	0	0	0	0	0	0	0	0	0	1	0	1	0	0
4.0.17	0	0	0	0	0	0	0	0	0	0	0	0	0	0	0	0	0	0	0	0	0	0
4.0.18	0	0	0	0	0	0	0	0	0	0	2	0	0	0	1	2	0	3	2	4	0	2
4.0.21	0	0	0	0	0	0	0	0	0	0	0	0	0	0	0	0	0	0	0	0	0	0
4.0.26	0	0	0	0	0	0	0	0	0	0	2	0	0	0	1	0	1	1	2	2	0	2
4.0.32	7	2	3	2	3	4	0	2	8	0	0	0	0	0	0	0	0	0	0	0	0	0
4.0.35	0	0	0	0	0	0	0	0	0	0	0	0	0	0	0	0	0	0	0	0	0	0
4.0.37	0	0	0	0	0	0	0	0	0	0	0	0	4	0	0	0	0	0	0	0	0	0
4.0.42	0	0	0	0	0	0	0	0	0	0	0	0	5	0	0	0	1	0	0	0	0	0
4.1.5	0	0	0	0	0	0	0	0	0	0	0	0	2	0	0	4	0	2	3	4	0	1
4.1.6	0	0	0	0	0	0	0	0	0	0	0	0	0	0	0	0	0	0	0	0	0	0
4.1.9	0	0	0	0	0	0	0	0	0	0	0	0	0	0	1	0	0	0	0	0	0	0
4.1.10	2	1	1	1	1	1	0	0	2	1	0	0	0	0	0	0	1	0	0	1	0	1
4.1.14	2	0	0	1	0	0	1	0	0	0	0	0	0	0	0	0	1	0	0	0	0	0
4.1.15	0	0	0	0	0	0	0	0	0	0	0	0	0	0	0	0	0	0	0	0	0	0
4.2.1	0	0	0	0	0	0	0	0	0	0	0	0	0	0	0	3	0	0	0	0	0	0

TABLE D-7 (continued)

TEST RUN NO.	NUMBER OF PANELS DEPAINTED																			SURF AREA (sq ft)	TIME (min)
	W	X	Y	Z	aA	aB	aC	aD	aE	aF	aG	aH	aI	aJ	aK	aL	aM	aN	aO		
4.0.10	0	0	0	0	0	0	2	2	2	2	2	0	0	0	0	0	0	0	0	384	145
4.0.13	1	0	1	0	0	0	1	0	0	0	0	0	0	0	0	0	0	0	0	38	33
4.0.16	1	0	1	0	0	0	1	3	3	2	2	0	0	0	0	0	0	0	0	100	80
4.0.17	0	0	0	0	0	0	2	2	2	1	2	1	0	0	0	0	0	0	0	61	51
4.0.18	4	2	4	0	0	0	0	0	0	0	0	1	4	0	0	0	0	0	0	219	181
4.0.21	0	0	0	0	0	0	3	3	3	1	2	0	0	0	0	0	0	0	0	79	45
4.0.26	4	1	2	0	0	0	5	6	5	4	6	0	0	0	0	0	0	0	0	321	119
4.0.32	0	0	0	2	0	0	0	0	0	0	0	0	0	0	0	0	0	0	0	268	165
4.0.35	0	0	0	0	0	0	3	5	3	3	4	0	0	0	0	0	0	0	0	118	74
4.0.37	0	0	0	0	0	0	2	2	2	1	2	0	0	0	0	0	0	0	0	75	56
4.0.42	0	0	0	0	0	0	0	0	0	0	0	0	0	0	0	0	0	0	0	30	13
4.1.5	3	6	3	0	0	0	0	0	0	0	0	0	0	0	0	0	0	0	0	169	88
4.1.6	0	0	0	0	0	0	1	2	2	0	2	0	0	0	0	0	0	0	0	53	33
4.1.9	0	0	0	0	0	0	0	0	0	0	0	0	0	0	0	0	0	0	0	8	7
4.1.10	0	2	1	0	0	0	2	6	2	4	6	0	0	0	0	0	0	0	0	264	133
4.1.14	0	0	0	0	0	0	0	0	0	0	0	0	0	0	0	0	0	0	0	63	23
4.1.15	0	0	0	0	0	0	2	2	2	1	2	0	0	0	0	0	0	0	0	58	52
4.2.1	0	0	0	0	0	0	1	1	1	0	1	0	0	0	0	0	0	0	0	50	25

(b) Letters correspond to the panel designations in Table 5

Source: Arthur D.Little, Inc.

Arthur D Little

TABLE D-8

TEST SERIES 4: UNPAINTED PANELS AND BLAST TIMES

TEST RUN NO.	NUMBER OF PANELS ROUGHED-UP																					
	A[illegible]	B	C	D	E	F	G	H	I	J	K	L	M	N	O	P	Q	R	S	T	U	V
4.0.9	0	0	0	0	0	0	0	1	0	0	0	0	0	0	0	0	0	0	0	0	0	0
4.0.13	8	3	2	2	3	3	2	0	3	0	13	1	0	0	0	0	0	0	5	0	1	3
4.0.16	8	2	2	3	3	6	5	4	6	5	0	0	0	0	0	0	0	0	2	0	0	1
4.0.18	0	0	0	0	0	0	0	0	0	0	0	0	0	0	0	0	0	0	0	2	0	0
4.0.21	4	2	2	2	2	2	2	1	2	3	2	2	0	0	0	0	0	2	3	2	0	1
4.0.28	10	8	4	4	3	8	8	0	14	0	2	1	0	0	2	0	1	2	2	2	0	4
4.0.32	0	0	0	0	0	0	0	0	2	0	4	0	0	0	1	0	6	0	3	1	0	0
4.0.34	4	0	8	3	2	3	3	2	8	6	0	1	0	0	4	7	5	3	1	5	2	6
4.0.37	0	0	0	0	0	0	0	0	0	0	0	0	4	5	0	1	0	1	0	2	0	0
4.0.38	15	8	7	7	4	6	8	8	15	6	0	4	0	0	0	0	0	0	0	0	6	0
4.0.45	0	0	0	0	0	0	0	0	0	0	0	0	0	0	0	0	0	0	36	0	0	0
4.1.5	0	0	0	0	0	0	0	0	0	0	0	0	0	0	0	2	0	1	0	1	0	1
4.1.9	0	0	0	0	0	0	0	0	0	0	2	0	0	0	1	0	2	3	2	3	0	3
4.1.10	0	0	0	0	0	0	0	0	0	0	0	0	0	0	0	0	0	0	0	2	0	1
4.1.11	3	2	2	2	3	3	3	1	6	0	0	1	0	0	0	0	0	0	0	0	0	0
4.1.12	4	0	2	1	3	2	1	0	4	0	0	0	0	0	0	0	0	0	0	0	0	0
4.1.14	2	0	2	0	2	3	0	0	3	2	0	0	0	0	5	1	0	1	4	1	0	3
4.1.15	0	0	3	2	2	2	2	0	4	0	0	2	0	0	1	0	0	1	0	1	0	1
4.2.3	2	1	1	1	1	1	1	1	2	0	0	0	0	0	1	1	21	1	1	1	1	1

TABLE D-8 (continued)

TEST RUN NO.	NUMBER OF PANELS ROUGHED-UP																			SURF AREA (sq ft)	TIME (min)
	W	X	Y	Z	aA	aB	aC	aD	aE	aF	aG	aH	aI	aJ	aK	aL	aM	aN	aO		
4.0.9	0	0	0	0	0	0	0	0	0	0	0	0	0	0	0	0	0	0	0	5	3
4.0.13	0	0	0	1	0	0	0	0	0	0	0	0	0	0	0	0	0	0	0	448	72
4.0.16	0	0	0	1	0	0	0	0	0	0	0	0	0	0	0	0	0	0	0	385	125
4.0.18	2	0	1	0	1	1	0	0	0	0	0	0	0	0	0	0	0	0	0	60	12
4.0.21	3	0	1	1	0	0	0	0	0	2	1	4	2	1	1	0	0	0	0	323	56
4.0.28	3	0	2	0	0	0	0	0	0	0	0	0	0	0	0	0	0	0	0	811	86
4.0.32	3	0	1	1	0	0	0	0	0	0	0	0	0	0	0	0	0	0	0	154	38
4.0.34	0	0	5	0	0	0	0	0	0	0	0	0	0	0	0	0	0	0	0	588	143
4.0.37	0	0	1	1	0	0	1	0	0	0	0	2	0	0	0	0	0	0	0	109	20
4.0.38	0	0	0	5	0	0	0	0	0	0	0	0	4	0	0	0	0	0	0	654	246
4.0.45	0	0	0	0	0	0	0	0	0	0	0	0	0	0	0	0	0	0	0	328	58
4.1.5	0	2	1	0	2	0	0	0	0	0	0	0	0	0	0	0	0	0	0	70	5
4.1.9	6	5	4	0	0	0	0	0	0	0	0	0	0	0	0	0	0	0	0	284	30
4.1.10	3	2	2	1	0	0	0	0	0	1	1	4	2	1	0	0	0	0	0	109	10
4.1.11	0	0	0	1	0	0	0	0	0	0	0	0	0	0	0	0	0	0	0	177	25
4.1.12	0	0	0	0	0	0	0	0	0	0	0	0	0	0	0	0	0	0	0	158	16
4.1.14	2	0	1	0	0	0	0	0	0	0	0	0	0	0	0	0	0	0	0	278	69
4.1.15	2	2	1	0	0	0	0	0	0	0	0	0	0	0	0	0	0	0	0	148	37
4.2.3	1	0	1	0	0	0	0	0	0	0	0	0	0	0	0	0	0	0	0	353	106

(b) Letters correspond to the panel designations in Table B.5

Source: Arthur D. Little, Inc.

Arthur D Little

TABLE D-9
INDEX FOR TABLES D-5 & D-6

A = WATER TANKS

B = 109 FINAL DRIVES

C = 110 FINAL DRIVES, RIGHT & LEFT SETS

D = 8V 95 ENGINE CONTAINERS

E = 8V 96 ENGINE CONTAINERS

F = XTG4112A TRANSFER CONTAINERS

G = M411 TRANSMISSION CONTAINERS

H = 8V SHIPPING & STORAGE CONTAINERS

I = HAWK TRANSMISSION CONTAINERS

J = HOSE REELS

K = BLENDERS

L = WATER TANK COVERS

M = INSIDE FINAL DRIVE ASSEMBLIES

N = M2-12 PUMP UNIT FRAME ASSEMBLIES

O = S250 SHELTERS

P = 175mm PROJECTILES &MISSILE TIPS

Q = 8V 95 CARC PAINTED ENGINE CONTAINERS

R = 8V 96 CARC PAINTED ENGINE CONTAINERS

S = CARC PAINTED TRANSFER CONTAINERS

T = CARC PAINTED FINAL DRIVE CONTAINERS

U = PLATE DOORS & GRILLS

V = RATION BOXES

W = PERISCOPE CORNERS

X = SPADES, RIGHT & LEFT

Y = M578 ENGINE COVERS, (1)

Z = M578 ENGINE COVERS, (2)

aA = COOLING FANS

APPENDIX E

RESULTS OF MEDIA FLOW RATE TESTS

APPENDIX E

RESULTS OF MEDIA FLOW RATE TESTS

Run #	Flow Rate Test 1		Flow Rate Test 2		Flow Rate Test 3	
	Screw Setting	Flow Rate (lb/min)	Screw Setting	Flow Rate (lb/min)	Screw Setting	Flow Rate (lb/min)
1.0.0	--	--	--	--	--	--
1.0.1	--	--	--	--	--	--
1.0.2	23	4.9	--	--	--	--
1.0.3	23	2.9	--	--	--	--
1.0.4	23	7.2	23	4.0	--	--
1.0.5	23	5.6	22	3.1	--	--
1.0.6	21	2.2	21	4.4	20	1.5
1.0.7	27	7.5	27	7.5	--	--
1.1.0	23	4.8	22	4.8	29	1.5
1.1.1	21	3.9	21	4.1	20.5	3.6
1.1.2	20.5	3.5	20.5	3.0	20.5	3.9
1.1.3	21	4.6	21	5.5	--	--
1.1.4	21	2.4	21	3.1	21	4.5
2.0.0	21.5	4.1	21.5	4.1	--	--
2.0.1	24	5.5	--	--	--	--
2.0.2	24	6.7	24	4.0	--	--
2.0.3	22	2.4	22	4.9	--	--
2.0.4	--	--	--	--	--	--
2.0.5	24	3.3	23	3.5	22	3.5
2.0.6	21.5	3.3	22	4.9	22	4.4
2.0.7	21.5	4.4	--	--	--	--
2.0.8	--	--	--	--	--	--
2.1.0	--	--	--	--	--	--
2.1.1	--	--	--	--	--	--
2.2.0	22	5.1	--	--	--	--
2.3.0	21.5	4.4	21.5	5.6	--	--
	22	4.6	22	5.9	21	3.4
2.4.0	21.5	2.9	21.5	4.2	--	--
2.4.1	--	--	--	--	--	--
2.5.0	21.5	4.6	21.5	4.6	--	--
	21.5	4.8	21.5	4.8	--	--

Source: Arthur D. Little, Inc.

DISTRIBUTION LIST

Defense Technical Information Center Cameron Station Alexandria, Virginia 22314	12
Defense Logistics Studies Information Exchange U.S. Army Logistics Management Center Fort Lee, Virginia 23801	2
Commander U.S. Army Toxic and Hazardous Materials Agency Attn: AMXTH-CO-P Aberdeen Proving Ground, Maryland 21010-5401	2
Commander U.S. Army Toxic and Hazardous Materials Agency Attn: AMXTH-TE-D Aberdeen Proving Ground, Maryland 21010-5401	14