SECURITY CLASSIFICATION OF THIS PAGE

REPORT DOCUMENTATION PAGE

1a. REPORT SECURITY CLASSIFICATION	1b. RESTRICTIVE MARKINGS
AD-A204 818	3. DISTRIBUTION/AVAILABILITY OF REPORT APPROVED FOR PUBLIC RELEASE: DISTRIBUTION IS UNLIMITED
FMC-TR-4381	5. MONITORING ORGANIZATION REPORT NUMBER(S) DTRC - SSID - CR - 15 - 89
6a. NAME OF PERFORMING ORGANIZATION FMC Corporation 6b. OFFICE SYMBOL (If applicable)	7a. NAME OF MONITORING ORGANIZATION DAVID TAYLOR RESEARCH CENTER
6c. ADDRESS (City, State, and ZIP Code) P. O. Box 1201 San Jose, California	7b. ADDRESS (City, State, and ZIP Code) Code 1240 Bethesda, MD 20084-5000
8a. NAME OF FUNDING/SPONSORING ORGANIZATION DAVID TAYLOR RESEARCH CENTER 8b. OFFICE SYMBOL (If applicable) 1240	9. PROCUREMENT INSTRUMENT IDENTIFICATION NUMBER N00167-85-C-0006
8c. ADDRESS (City, State, and ZIP Code)	10. SOURCE OF FUNDING NUMBERS

PROGRAM ELEMENT NO.	PROJECT NO	TASK NO.	WORK UNIT ACCESSION NO.
63611M	CF0016AN		DN479114

11. TITLE (Include Security Classification)
17-INCH SINGLE PIN ALUMINUM TRACK DEVELOPMENT PROGRAM FOR FUTURE U. S. MARINE CORPS TRACKED VEHICLES

12. PERSONAL AUTHOR(S)

13a. TYPE OF REPORT	13b. TIME COVERED	14. DATE OF REPORT (Year, Month, Day)	15. PAGE COUNT
FINAL	FROM 2/85 TO 11/86	1986 November 20	109

16. SUPPLEMENTARY NOTATION

(Keywords:)

17. COSATI CODES			18. SUBJECT TERMS (Continue on reverse if necessary and identify by block number)
FIELD	GROUP	SUB-GROUP	Aluminum Track, Tracked Vehicles, Combat Vehicles, Track and Suspension; vehicle tracks; (KT)

19. ABSTRACT (Continue on reverse if necessary and identify by block number)

This report covers the work performed during the design and development of a prototype 17 inch, aluminum track. Design calculations, bench test data, safety assessment and fit and function test are included in this report. Field feasibility and durability evaluation of the track is in progress on a 17.5 ton, 300 horsepower FMC provided Armored Infantry Fighting Vehicle (AIFV) demonstration vehicle at the Amphibian Vehicle Test Branch, Camp Pendleton, California.

20. DISTRIBUTION/AVAILABILITY OF ABSTRACT ☒ UNCLASSIFIED/UNLIMITED ☐ SAME AS RPT ☐ DTIC USERS	21. ABSTRACT SECURITY CLASSIFICATION UNCLASSIFIED
22a. NAME OF RESPONSIBLE INDIVIDUAL Rod Peterson	22b. TELEPHONE (Include Area Code) (301) 227-1852 22c. OFFICE SYMBOL 1240

DD FORM 1473, 84 MAR — 83 APR edition may be used until exhausted. All other editions are obsolete — SECURITY CLASSIFICATION OF THIS PAGE

DTIC ELECTE 17 1989 D
DTIC FILE COPY

FMC TECHNICAL REPORT 4381

17-INCH SINGLE PIN ALUMINUM TRACK DEVELOPMENT PROGRAM FOR FUTURE U.S. MARINE CORPS TRACKED VEHICLES

Phase I Final Report
By
FMC Corporation
San Jose, CA 95108

FMC

Prepared for
David W. Taylor Naval Ship
Research and Development Center
Contract No. N00167-85-C-0006

20 NOVEMBER 1986

89 2 16 163

17-INCH SINGLE PIN ALUMINUM TRACK DEVELOPMENT PROGRAM FOR FUTURE U.S. MARINE CORPS TRACKED VEHICLES

Prepared by

FMC Corporation, Ordnance Division

San Jose, California 95108

Prepared for

DAVID TAYLOR NAVAL SHIP RESEARCH AND DEVELOPMENT CENTER

(Contract N00167-85-C-0006)

NOVEMBER 1986

Submitted by:

S. Roldan
Associate Mechanical Engineer
Suspension Systems

Reviewed by:

W. Bilkiewicz
Staff Engineer
Suspension Systems

Approved by:

W. Grusonik, Manager
Suspension Systems

QUALITY INSPECTED 4

Accesion For
NTIS CRA&I ☑
DTIC TAB ☐
Unannounced ☐
Justification
By
Distribution /
Availability Codes
Dist | Avail and / or Special
A-1

ABSTRACT

This report covers the work performed during the design and development of a prototype 17 inch, aluminum track. Design calculations, bench test data, safety assessment and fit and function test are included in this report. Field feasibility and durability evaluation of the track is in progress on a 17.5 ton, 300 horsepower FMC provided Armored Infantry Fighting Vehicle (AIFV) demonstration vehicle at the Amphibian Vehicle Test Branch, Camp Pendleton, California.

TABLE OF CONTENTS

Section		Page Number
1.0	INTRODUCTION	1
2.0	HISTORY	2
3.0	THE DESIGN	2
	3.1 Design Component Advantages	6
	3.2 Aluminum Alloy Selection	6
	3.3 Track Components Characteristics	10
	3.3.1 Design Features	10
	3.3.2 Track Vehicle Test	10
4.0	DESIGN TESTING	10
	4.1 Test Vehicle	11
	4.1.1 Track Break-in Test	15
5.0	MAINTENANCE AND INSPECTION	15
6.0	COST TO OUTFIT 1000 VEHICLES	15
7.0	CONCLUSIONS AND RECOMMENDATIONS	15
	7.1 Track	15
	7.2 Track Guides	17
	7.3 Sprocket and Drive Bushings	17
	7.4 Future Considerations	17
8.0	APPENDIX	18

FIGURES

Figure Number		Page Number
1	17-Inch Aluminum Track Shoes	3
2	Top and Bottom View of Track Shoe P/N 4219265	4
3	Aluminum Track Component Weight	5
4	17-Inch Aluminum Track Load Criteria	7
5	Corrective Measures Taken in the New Design	8
6	Drawing Tree	9
7	Top View of Test Shoe	12
8	Bottom View of Test Shoe	12
9 & 10	Test Load Conditions	13
11	Comparison of Track Shoe Before and After Modification	14
12	Modified Section with Added Material	14
13	Production Cost Estimates for 1000 Vehicles in FY 85 Dollars	16

17-INCH ALUMINUM TRACK

1.0 INTRODUCTION

The objective of this project was to design and fabricate 400 complete sections of a lightweight, 17-inch, single pin, aluminum track as part of an exploratory program in which technology is developed for future Marine Corps tracked vehicles.

Laboratory tests were conducted and successfully completed to prove the feasiblity of the design. These tests include a photoelastic stress analysis and a track guide load simulation.

The track was built and initially tested on the paved track at the FMC's San Jose facility in a 100 mile break-in test. After completion of the 100 miles, the test vehicle and track were shipped to the Amphibian Vehicle Test Branch (AVTB), Camp Pendleton, Califonia for an additional 4000 mile test. FMC provided a suitably modified, 35,000 pound GVW, test vehicle, associated interface hardware, and as-required spares and maintenance support which should permit the execution of a government test program to determine the track feasibility and durability.

As of the writing of this report, the aluminum track has completed 1437 track endurance test miles (1337 test miles at AVTB). At the end of 1099 test miles, an incident occured when the vehicle crested a steep hill and the driver lost control. The vehicle traversed down the hill and landed on the left side of a gully, causing the left track to be thrown to the inside. There was some damage to the track, aluminum hull, roadwheels and the track adjuster mounting bracket.
The vehicle was restored to operating conditions and re-inspected under the supervision of FMC personnel. At the request of the David Taylor Naval Ship Research and Development Center, the entire left-side track assembly was replaced and the endurance test was resumed.

2.0 HISTORY

FMC's experience in developing aluminum track goes back to 1955. The T-144 aluminum track was designed for the Hawk Loader and is still in use today.

In the early 1960's a forged aluminum track for the M113 APC was built and tested by FMC. This track did not have reinforcements with steel wear surfaces. The track performed for approximately 1600 miles and excessive wear was observed in the sprocket drive contact areas and the track guide surfaces. This testing was done as a feasibility study for aluminum track.

In 1973-1974 FMC developed a successful, 17-inch, lightweight, double pin, aluminum track for the XM-800 Armored Reconnaissance Scout Vehicle.

In more recent years, ALCOA, with technical support from FMC, developed a forged aluminum track for the Marine Corps LVTP7 vehicle. The track lasted 3600 miles during testing and had noticeable wear in the sprocket drive areas and center guide surfaces.

3.0 THE DESIGN

During this phase, several designs were examined and evaluated. The single pin design that was chosen, shown in Figure 1, incorporates a bolt-on steel track guide and heat shrunk steel drive bushings on the aluminum shoe. This design offers the lightest weight for the lowest cost and risk.

The guide is fastened to the shoe by a bolt and the track pad nut. Therefore, it can be replaced if it becomes worn or damaged. Grouser wear has been regarded as a limiting factor in the track life. The track addresses this limitation by incorporating a larger pad, larger grouser and hardened steel outboard grousers integral with the drive bushings. The actual track shoe is shown in Figure 2.

The individual component weights are presented in Figure 3. The 17-inch steel XT-148 track for the AIFV / OERLIKON (GVW 31,000 lbs.), weighs 23.9 lbs. per six inch pitch. Comparing the 17-inch aluminum track shoe to a similar shoe manufactured using steel, for a 35,000 lbs. GVW vehicle, the projected weight savings per shoe would be about 5 pounds. This translates to an approximate vehicle weight savings (assuming 127 shoes/ vehicle) of 635 pounds.

17-Inch Aluminum Track Shoes

FMC

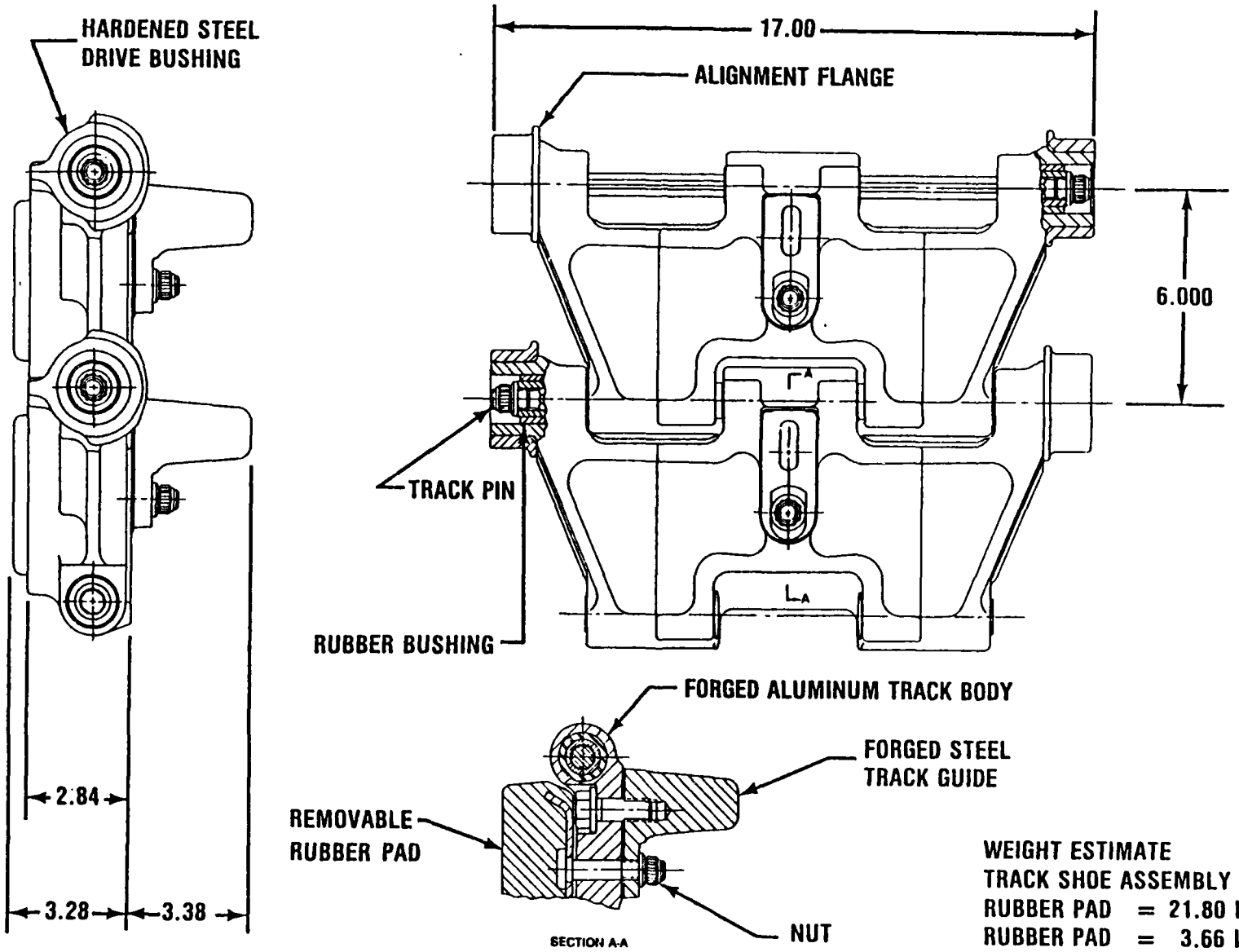

WEIGHT ESTIMATE
TRACK SHOE ASSEMBLY WITH
RUBBER PAD = 21.80 LB
RUBBER PAD = 3.66 LB

FIGURE 1

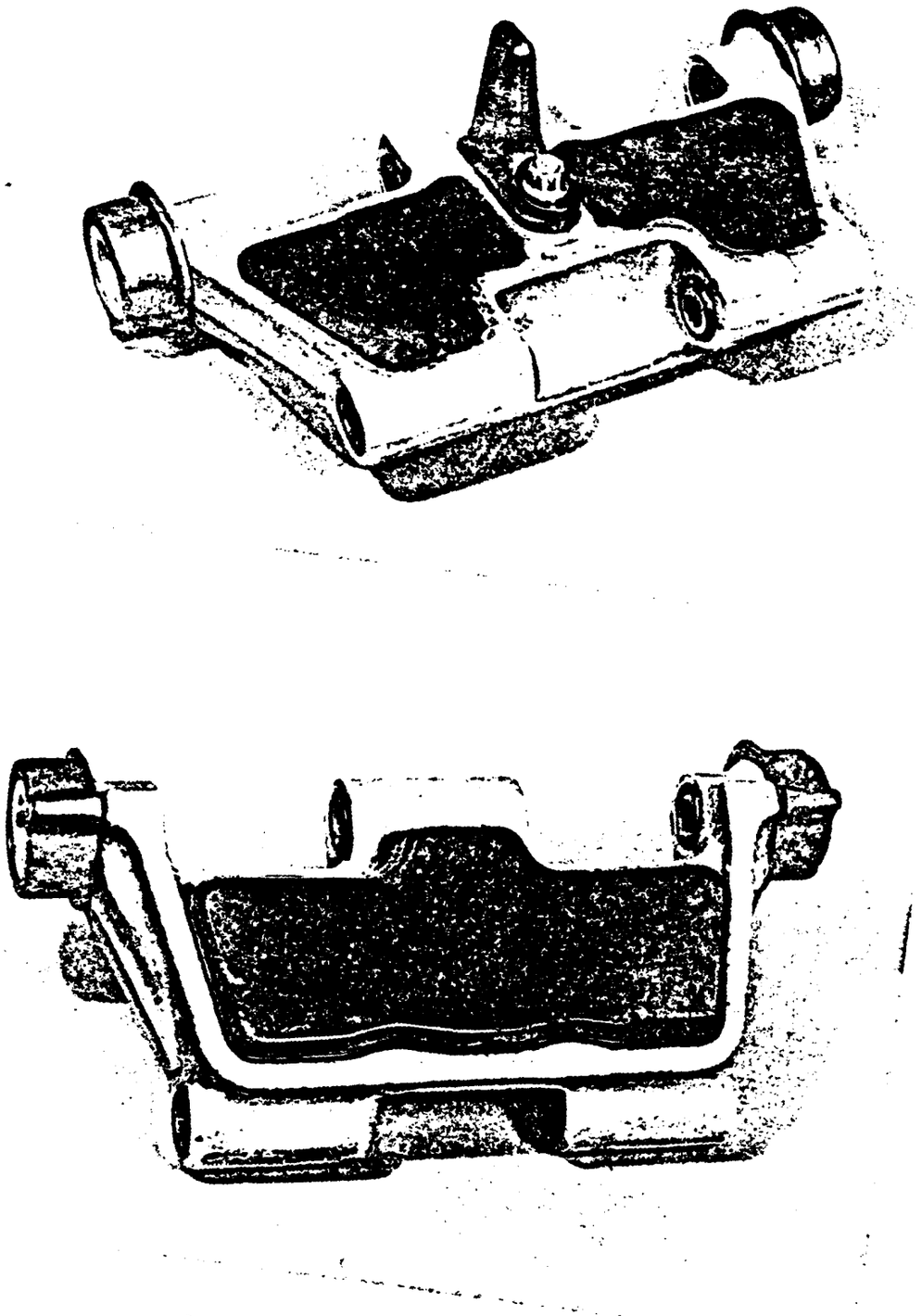

TOP AND BOTTOM VIEW OF TRACK SHOE
P/N 4219265
FIGURE 2

FIGURE 3 ALUMINUM TRACK COMPONENT WEIGHT

Item	Quantity	Total Weight	Average Individual Weight
Shoe Bodies	8	119	14.9
Pads	8	29.3	3.66
Pins	8	11.7	1.96
Guides	8	10.5	1.31
Hardware	8 bolts 8 washers 24 nuts	3.25	.406
Complete Assemblies	10	218	21.8

The unit loading on the rubber bushings is 1,866 psi, which is lower than the LVTP7 vehicle track. Based on our LVTP7 experience, this will result in a life of 4,000 miles. The nominal pressure of the rubber pad, in contact with the ground, after .25 inch wear is 88.2 psi (LVTP7 track pad pressure is 151 psi). Comparing this to other tracks with this pressure, it is estimated the pads will have an average life of 1,500 miles. The 17-inch aluminum track loading criteria is shown in Figure 4.

In the new design, consideration was given to the wear that takes place between the sprocket teeth and the aluminum shoe body adjacent to the drive bushing. In the ALCOA-FMC developed shoe, this damage is caused by a progressive increase in clearance between the track guide and the sprocket carrier guide rings due to wear. A used 21 inch ALCOA track shoe and a new 17-inch track shoe are shown in Figure 5. To alleviate the wear that is observed on ALCOA-FMC shoe, an alignment flange was added to the drive bushing. This flange was designed to keep the sprocket teeth in line with the driving suface of the shoe. The drawing tree listing all track details is in Figure 6.

3.1 DESIGN COMPONENT ADVANTAGES

The bolt-on steel guide is replaceable, less susceptible to wear (no thin steel as in the case of a rubberized track guide cap) and the narrowness permits the use of standard roadwheels without spacers, thus retaining the overall width of the suspension.

The steel drive bushings are equipped with an integral steel grouser for aggressiveness and to reduce the wear of the aluminum grouser, primarily when operating on pavement. The added alignment flange prevents the damage to the aluminum body caused by an increasing clearance between the track guide and the sprocket guide rings.

We have full confidence that the track is capable of attaining an average life of 4000 miles. Our confidence is based on the performance of the ALCOA-FMC developed track, the similarity of materials and the improved structural design verified by photoelastic stress analysis. Structural improvements to the shoe during testing resulted in a near uniform stress distribution and the elimination of high stress concentrations.

3.2 ALUMINUM ALLOY SELECTION

Initially, FMC considered alloy 6013-T6 which has toughness properties comparable to those of 6061-T6 and 2024-T3. The fracture toughness in the longitudinal and transverse directions are 38 ksi, which is better than 6061-T651.

17 INCH ALUMINUM TRACK LOAD CRITERIA

CASE 1	CASE 2	CASE 3	CASE 4
ULTIMATE TRACK TENSION 40 KIP	TORSION (SHOE TO SHOE THROUGH CENTER OF TRACK) 54 K-IN WITHOUT FLATNESS SET OF .06 IN MAX	BEAM LOAD 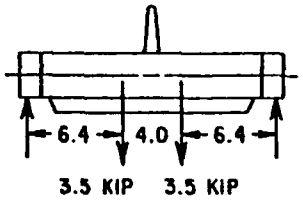	TRACK THROW 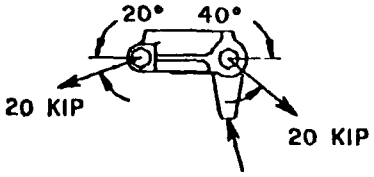
CASE 5	CASE 6	CASE 7	
GUIDE LOAD 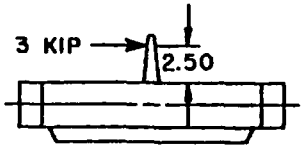	TORSION FATIGUE 30K CYCLES APPLY SIMULTANEOUSLY • 14 KIP SHOE TO SHOE TENSION • +/- 20 K-IN SHOE TO SHOE TORSION	SPROCKET DRIVE 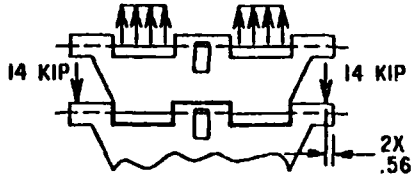	

4.SP.PN.LOAD.TRAC
1-30-85 PLN

FIGURE 4

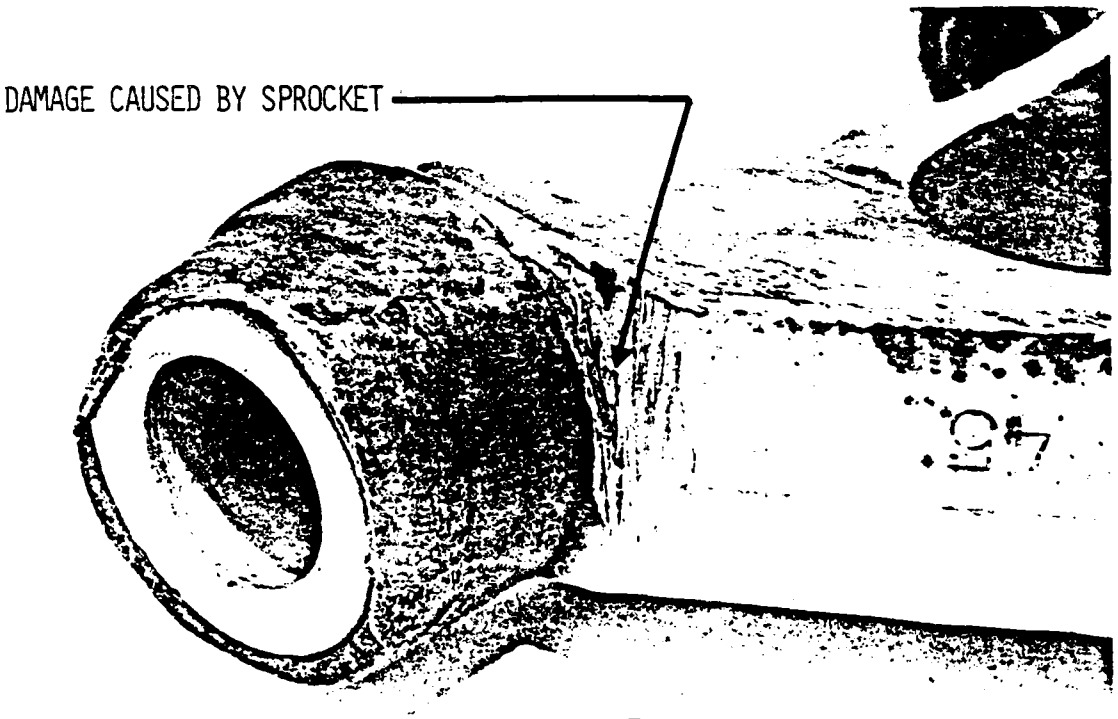

TRACK SHOE (ALCOA)
DWG. NO. D296015

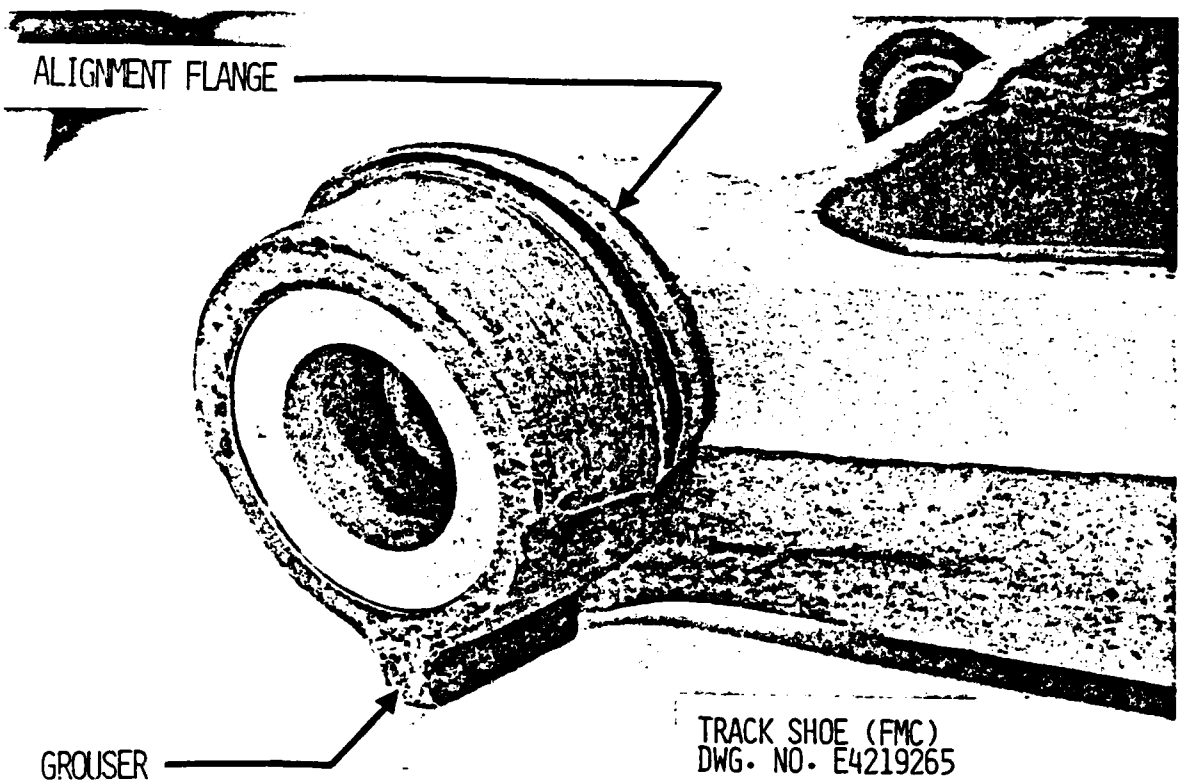

TRACK SHOE (FMC)
DWG. NO. E4219265

CORRECTIVE MEASURES TAKEN IN
THE NEW DESIGN

FIGURE 5

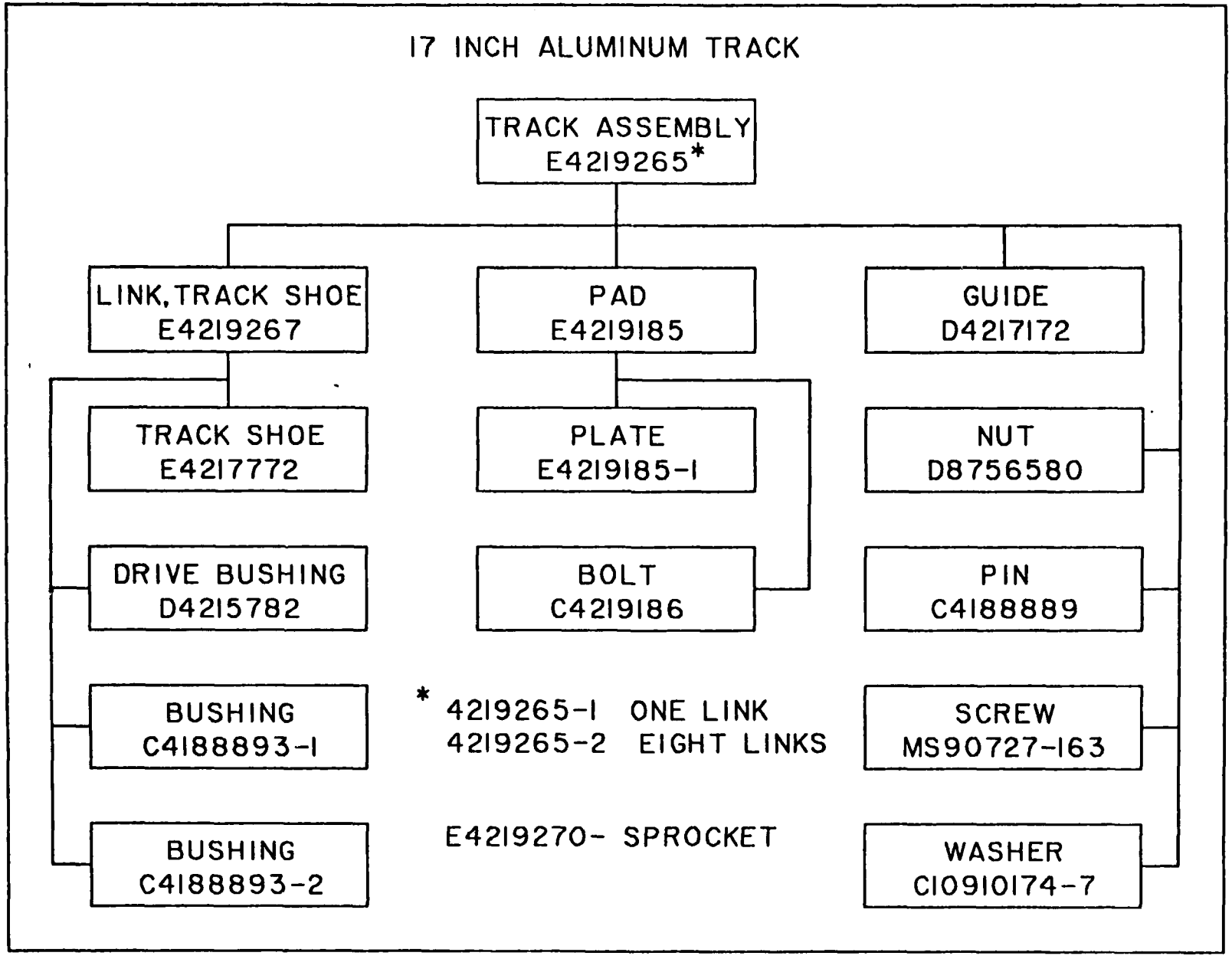

FIGURE 6 DRAWING TREE

Aluminum alloy 6013 has proved to be superior to 6061 in a stretch forming operation. Its stress corrosion cracking resistance is comparable to 6061-T6. The general corrosion characteristics (ie. pitting) of 6013-T6 is slightly inferior to 6061-T6 in very severe environments. Fatigue test results for 6013-T6 show that these properties are comparable to those of 6061-T6.

It was a decision by the David Taylor Naval Ship Research and Development Center that the 6061-T6 alloy be used because of its success in previous similar applications.

3.3 TRACK AND INTERFACE COMPONENT CHARACTERISTICS

3.3.1 DESIGN FEATURES

A. ALUMINUM TRACK BLOCK :
Drawing: E 4217772 Rev. A
Material: Forging, Aluminum, 6061-T6, Spec QQ-A-367, Solution heat-treated and artificially aged to T6 temper
Width: 17.00 in.
Pitch: 6.00 in.
Rubber pad area: 39.7 sq. in.
Rubber bushing areas: 3.75 sq. in.
Grouser area: 13.6 in.

B. SPROCKET-DRIVE WEAR BUSHING :
Drawing: D 4215782 Rev. 0
Material: Forging, Steel, 4140,8640,8740,5145, Spec. MIL-S-46172, Normalized and heat-treated to Rockwell C40-45

C. TRACK GUIDE :
Drawing: D 4217172 Rev. 0
Material: Forging, steel, 4140,8640,5145, Spec. MIL-S-46172, Normalized and heat-treated to Rockwell C40-45

D. WEIGHT ANALYSIS :
Track Assembly = 21.8 lbs./ 6 inch pitch

3.3.2 TRACK VEHICLE TEST: By Marine Corps, Camp Pendleton AVTB

Test Required: 100 mile initial break-in
Durability Test Required: 4000 mile durability
Durability Test Completion Date: 12 months after delivery date

4.0 DESIGN TESTING

To prove the feasibility of the design, several tests were conducted. These tests included a photoelastic stress analysis and a static load test on the bolt-on track guide.

Photoelastic-coating tests are an experimental stress-analysis technique. The track shoe to be analyzed is coated with a special transparent plastic coating, which then becomes bifringent. This bifringence is directly proportional to the intensity of the strain. Bifringence can be observed and measured with polarized light in a specially designed instrument called a Reflection Polariscope. When the plastic coating is examined in a field of polarized light from the instrument, black and colored fringe patterns are seen. These reveal the complete geography of mechanical strains in the test piece. By using a set of equations, the stress values can be obtained.

The photoelastic-coating test, being essentially a surface-strain technique, differs from the strain-gage technique in that strains are quantitatively determined not only at areas where strain gages are located, but also in a continuous manner at every point of the surface coated with the photoelastic plastic. In Figures 7 and 8, a test shoe is shown with the photoelastic coating and identification numbers in place to label areas of interest.

The photoelastic stress analysis was done at FMC's Steel Products Division. Figures 9 and 10 depict the loading conditions in the test. A sample of the data gathered during the test is located in the appendix in Figure A. The initial photoelastic test revealed areas where stress levels were quite high. Modifications were implemented to reduce this stress concentrations and the track shoe was tested again. The second test demonstrated that the modifications greatly reduced the stresses in the shoe. Figure 11 shows the track shoe before and after the modifications. A close-up of a modified section with added material is shown in Figure 12.

The bolt-on steel center guide was also subjected to testing. Components which simulated the joint geometry and material properties were designed, fabricated and subjected to load testing at FMC's Central Engineering Laboratory. It was concluded that the bolt-on steel guide with sled runner-like bearing areas met the requirements of vehicle service. Joint integrity was maintained in excess of the anticipated worst case loading which is a 0.7g turn (skid limit).

4.1 TEST VEHICLE

An AIFV, with FMC's Hydrostatic Steer Differential (HSD) steering system, was used as the 17-inch aluminum track demonstration vehicle. This vehicle was up-powered to 300 horsepower and up-weighted to 35,000 pounds. Special spacers were designed, fabricated and installed on the vehicle in order to accomodate the 17-inch wide track. As a result, the center to center distance between tracks has increased by 2.0 inches.

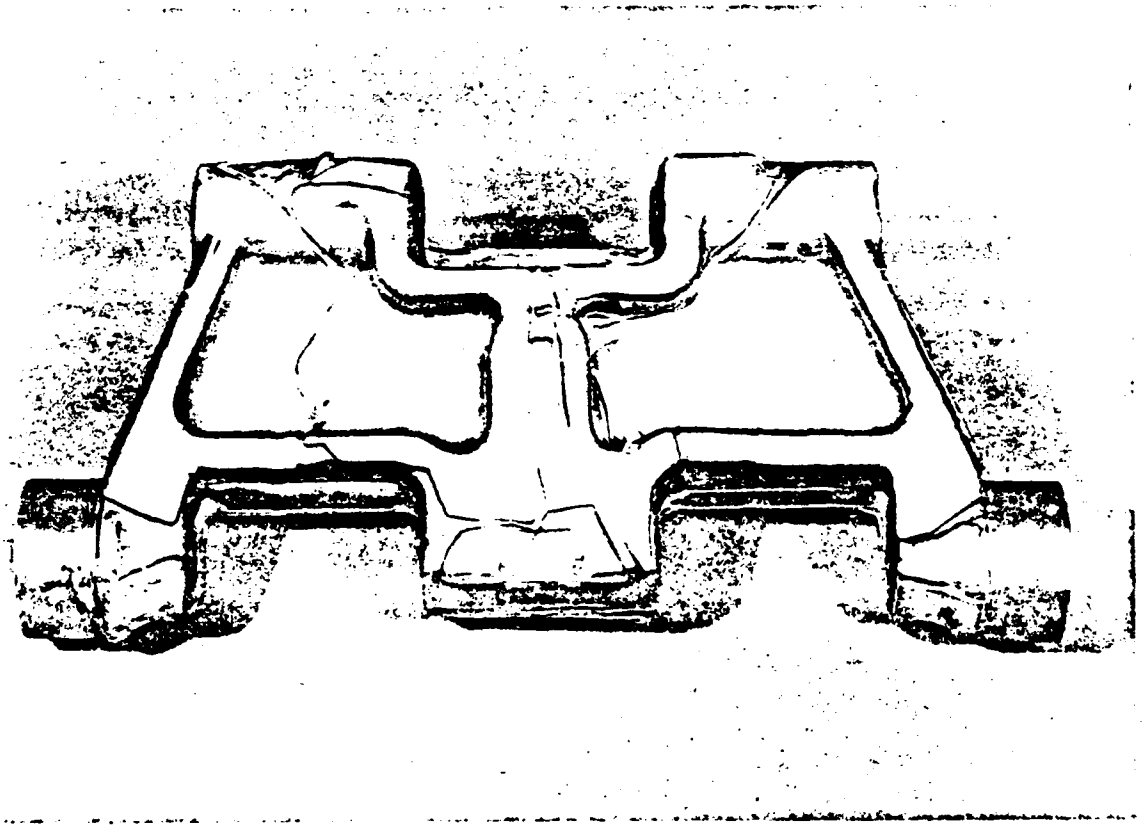

TOP VIEW OF TEST SHOE

FIGURE 7

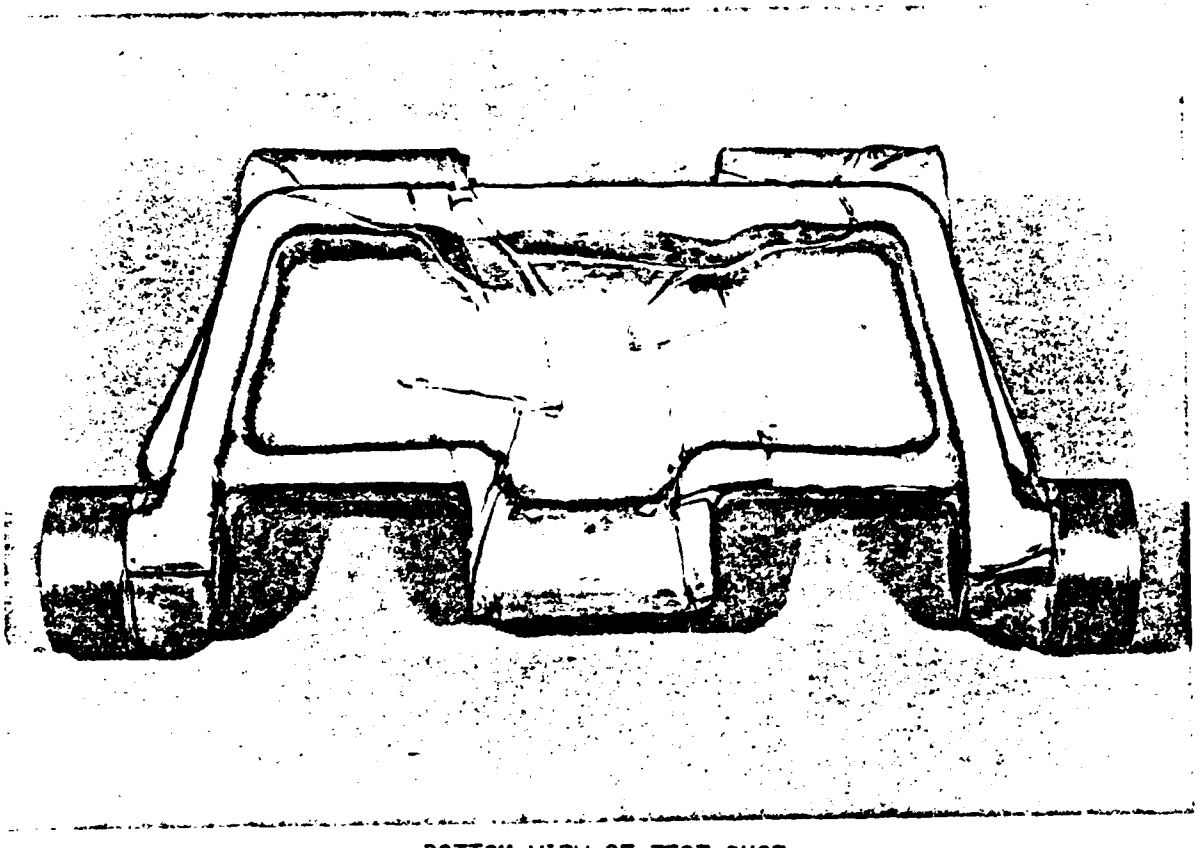

BOTTOM VIEW OF TEST SHOE

FIGURE 8

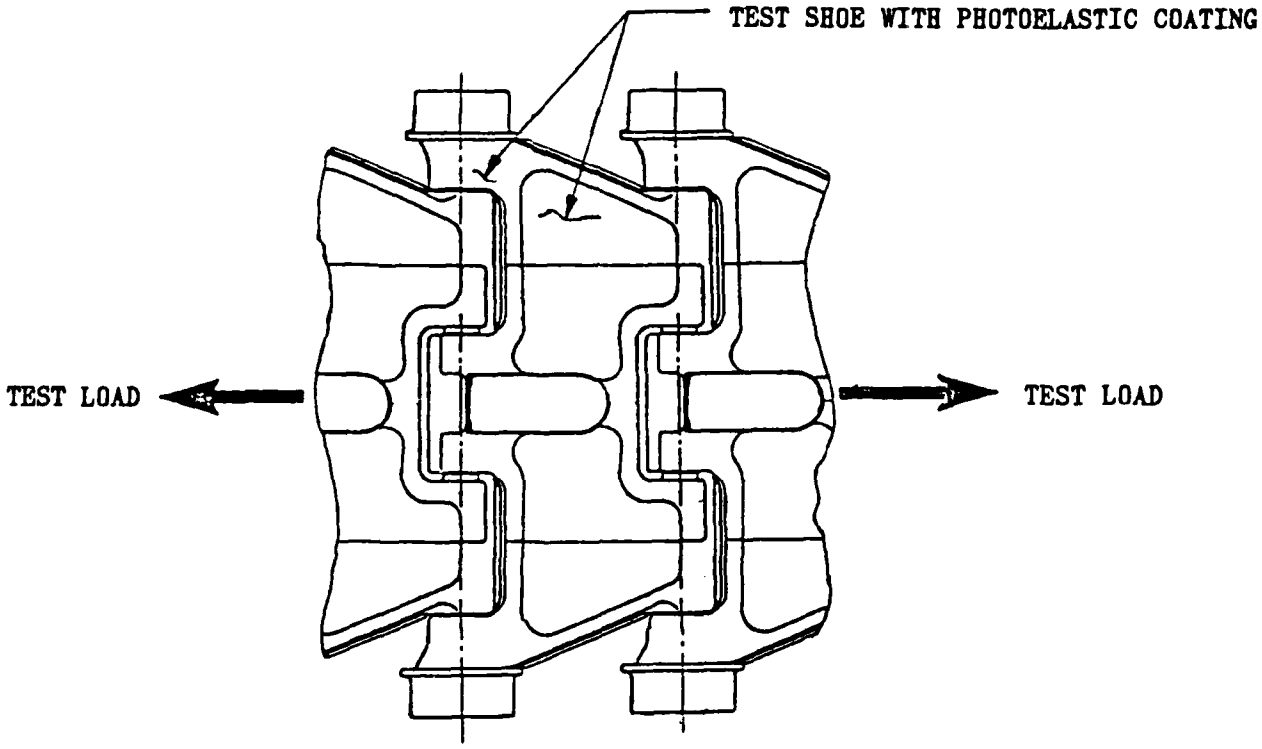

FIGURE 9

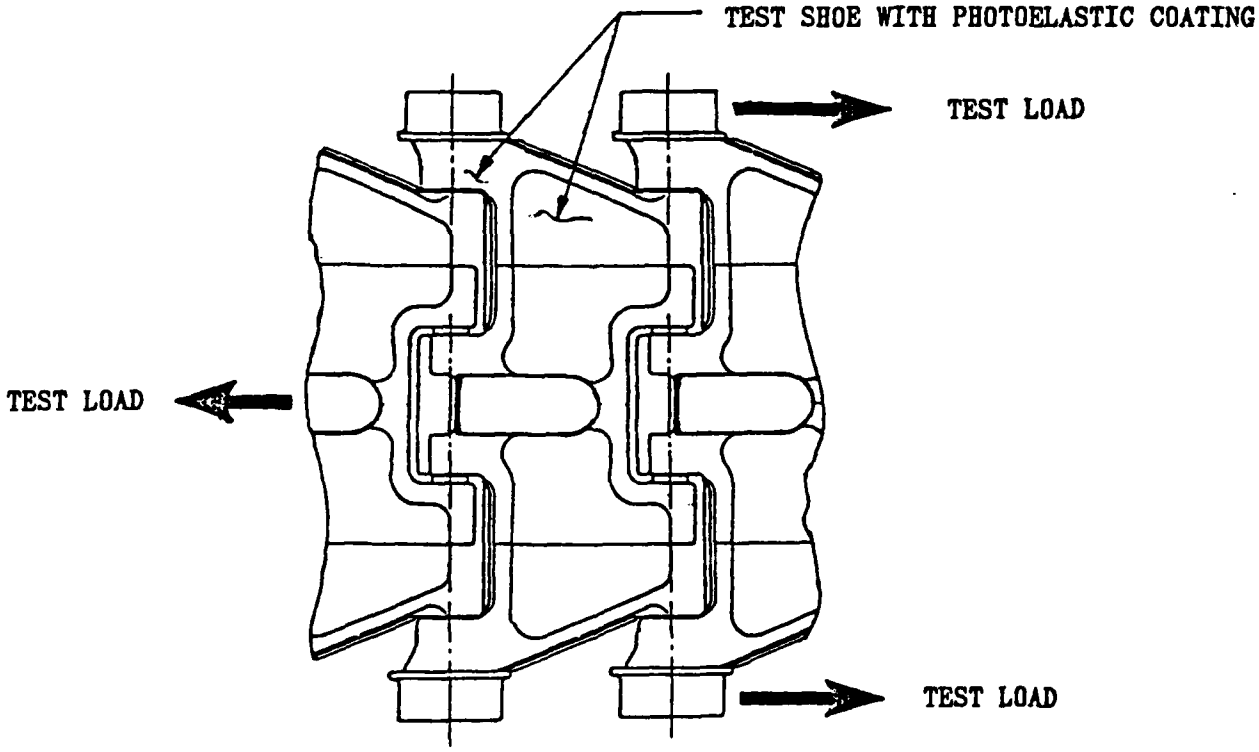

TEST LOAD CONDICTIONS

FIGURE 10

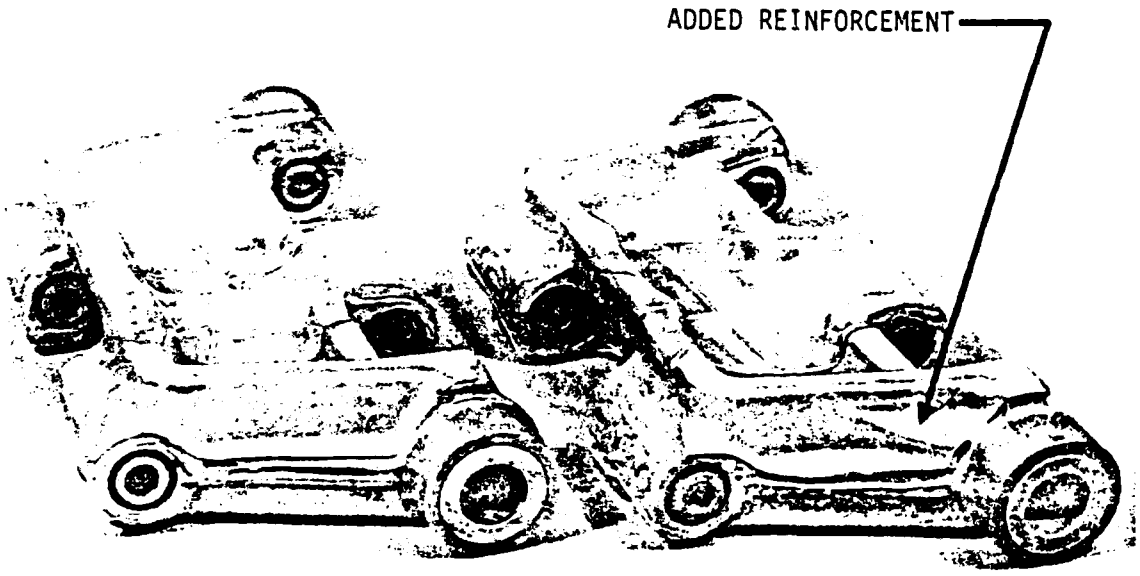

COMPARISON OF TRACK SHOE
BEFORE AND AFTER MODIFICATION

FIGURE 11

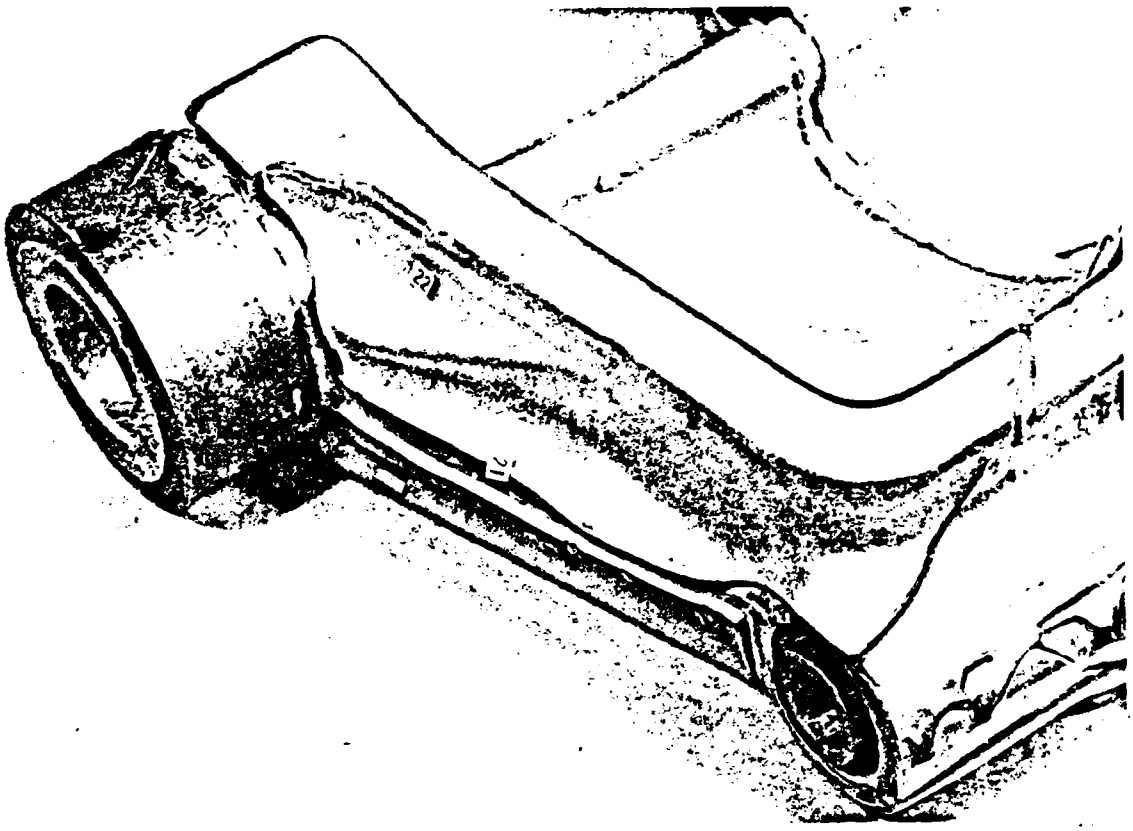

MODIFIED SECTION WITH
ADDED MATERIAL

FIGURE 12

4.1.1 TRACK BREAK-IN TEST

The initial break-in test consisted of determining the weight of the individual track components and the running the vehicle for 100 miles on FMC's paved oval track. Two measurements were taken before and after the 100 mile test: pad height and track stretch. After successful completion of this test, the vehicle was delivered to the Amphibian Vehicle Test Branch at Camp Pendleton, California for a durability test of 4000 miles. A copy of the initial break-in test report is located in the appendix.

5.0 MAINTENANCE AND INSPECTION

In order to fully monitor track wear characteristics, six gages were designed and manufactured. These gages measure grouser height, track pad height, and also define limits for: sprocket tooth wear, track pitch stretch, drive bushing wear and track guide wear. To inspect the condition of the track, the MAINTENANCE GUIDE FOR THE 17-INCH ALUMINUM TRACK was written. This document contains pictures and standards that indicate wear limits and the extent of damage before the track shoes are declared unserviceable. A copy of the maintenance document is included in the appendix. Useful life of track components can be extended by preventive maintenance services described in the technical manual for the vehicle and in the technical manual TM 9-2530-200-24, Section II.

6.0 COST TO OUTFIT 1000 VEHICLES

As prescribed in the contract, the final report shall include the the production cost estimates for producing the components in quantities which would outfit 1000 vehicles. Figure 13 is an itemized list of production cost estimates in CY 86 dollars. From these costs, it is shown that a fully assembled track block including one track pin per block would approximately cost $155.

7.0 CONCLUSIONS AND RECOMMENDATIONS

7.1 TRACK

As a result of the track throw incident, the track was badly twisted along its axis and 29 drive bushings were forcibly rotated as the track wedged itself between the idler wheel and the hull. When the track pins were replaced, the track straightened. All of the bolt-on steel track guides were intact and showed no indications of joint looseness. The torque required to rotate the drive bushings back to the original position varied from 81 ft-lbs to 690 ft-lbs with an average of 513 ft-lbs. At the request of the David Taylor Naval Ship Research and Development Center, the entire left-side track assembly was replaced and the endurance test was resumed.

17-INCH ALUMINUM TRACK
PRODUCTION COST ESTIMATES
FOR 1000 VEHICLES IN CY 86 DOLLARS

DESCRIPTION PART NUMBER	QTY / TRACK SHOE	QTY / 1000 VEH.	PRICE EACH	PRICE TOTAL
Track Link * (Including track pin and 2 nuts)	1	127,000	$ 128.87	
Track Guides 4217172	1	127,000	$ 14.42	
Washers 10910174-7	1	127,000	$ .17	
Cap Screw MS 90727-163	1	127,000	$ .34	
Track Pads (Including nut) 4219185 & 8756580	1	127,000	$ 10.42	
Track Shoe Assy 4219265-1	1	127,000	$ 154.22	$ 19,585,940.
Sprocket Carrier ** SK 860506SAR	N/A	4,000	$ 175.13	$ 700,520.
		Tooling		$ 23,319.
		Sample		$ 455.
Sprocket Wheel ** 4222420	N/A	4,000	$ 185.12	$ 740,480.
			TOTAL :	$ 21,050,714.

* Including tooling cost assembled in multiples of 8

** Approximate production configuration
(2 sprocket carriers & 4 sprockets / vehicle)

FIGURE 13

7.2 TRACK GUIDES

The bolted-on track guides show no evidence of loosening and are performing very well. All track guide wear resulting from contact with the roadwheels, idler wheels and sprocket track guide rings is light.

7.3 SPROCKET AND DRIVE BUSHINGS

No excessive wear was observed on either the sprocket teeth or the drive bushings. Wear measurements will be taken every thousand miles of operation at AVTB.

7.3 FUTURE CONSIDERATIONS

As an alternative to the present manufacturing process, the drive bushings could be installed using an expansion technique. By implementing a tube type expander, an induction hardened (Rockwell C50 to C55) steel drive bushing could be used and inserted onto the caulking-coated aluminum boss and the boss could then be expanded, securing the bushing in place. This method would eliminate the high cost of shrink fitting and guarantee a good seal between the aluminum boss and the steel bushing. Induction hardening would reduce the wear and extend the life of the drive bushing.

Based on recent field observations, an increase in sprocket tooth width and thickness would further help to reduce the sprocket-track generated noise level and drive bushing contact surface wear.

Serious consideration should also be given to a double pin aluminum track with bolted-on steel track guides and steel end connectors. A value analysis should be performed comparing both types of track. The double pin track arrangement would also eliminate the costly shrink fit associated with the single pin track and reduce the danger of fretting and galvanic corrosion between the steel bushing and the aluminum shoe.

8.0 APPENDIX

PHOTOELASTIC STRESS ANALYSIS 4/29/85
DATA POINT STRESS CALCULATIONS
17" ALUMINUM TEST TRACK
DESIGN 2

TEST MODE: 6,000 lb. (TENSION, SPROCKET DRIVE SIMULATION)

****

POINT	SHEET	N	t	f VALUE	(s1-s2)/N	s1-s2
1	5	.44	.117	.081	9545	4200
2	6	.69	.119	.083	9236	6372
3	6	.6	.088	.083	12385	7431
4	4	.54	.081	.09	13960	7538
5	4	.47	.083	.09	17623	8403
6	5	.28	.117	.081	9545	2673
7	4	.9	.083	.08	17623	10899
8	4	.62	.085	.08	13203	8248
9	5	0	.115	.081	9711	0
10	4	0	.105	.08	10769	0
11	1	.93	.118	.087	8811	8195
12	1	.82	.11	.087	9452	7751
13	1	.89	.098	.087	10610	9443
14	3	.8	.111	.083	9819	7855
15	3	.87	.108	.083	10091	8779
16	1	.46	.117	.087	8887	4088
17	2	.76	.113	.088	9097	6914
18	2	.85	.078	.088	13179	11202
19	3	.42	.115	.083	9477	3980
20	3	.67	.116	.083	9395	6295
21	2	.98	.115	.088	8939	8760
22	2	.97	.11	.088	9345	9065

****

NOTE: N = THE NUMBER OF FRINGES AT THE POINT OF INTEREST
t = THE THICKNESS OF THE PHOTOELASTIC MATERIAL AT THE POINT OF INTEREST IN INCHES
f = THE FRINGE OPTICAL CONSTANT
s = THE STRESS MEASURED AT THE POINT OF INTEREST IN (PSI)

****

FIGURE A

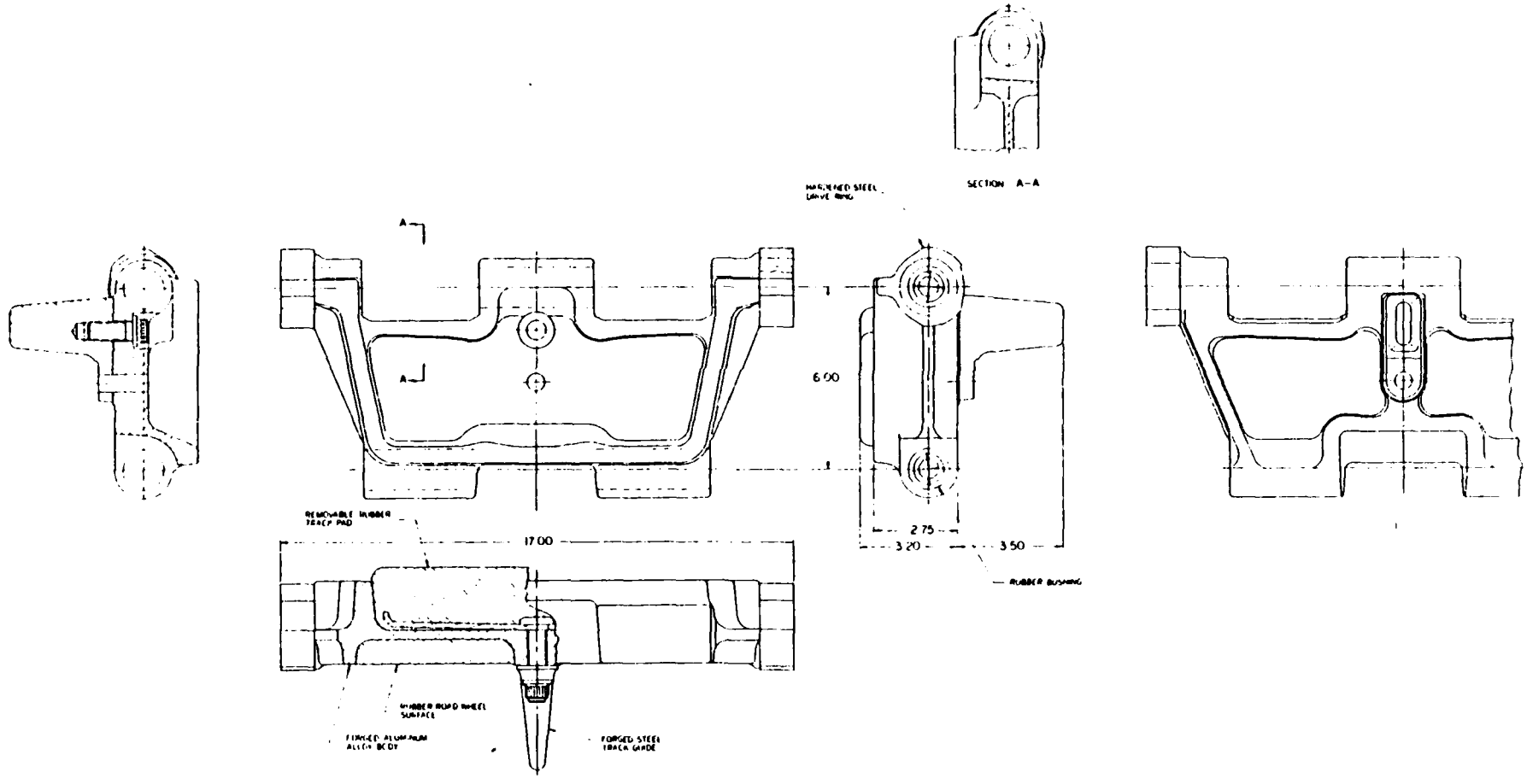

17 INCH TRACK, SINGLE PIN, LIGHTWEIGHT

DRAWING NO. 4211626

AIFV

Technical Report 4240

FIT AND FUNCTION OF SEVENTEEN-INCH ALUMINUM TRACK ON AN AIFV

Project Authorization 029-400-001

Reference: Test Work Request 831
Test Plan 10275

Contract N00167-85-C-006

April 1986

Ordnance Division (Engineering)
FMC Corporation
San Jose, California

Prepared By:

Mark Christopherson
Mechanical Engineer

Approved By:

A. Joyal
Manager, Engineering Test

Reviewed By:

System Safety

W. Grusonik
Project Manager

1. INTRODUCTION

The Marine Corps Program Office of the David Taylor Naval Ship Research and Development Center (DTNSRDC) is pursuing the development of a 17-inch aluminum block single-pin track as proposed in an FMC Corporation proposal entitled "Manufacture and Test of a 17-inch Aluminum Track, 15-16 Ton Vehicle", dated June 1983. This test is an initial checkout to ensure that the track is suitable for additional testing by the Marine Corps.

2. PURPOSE

The purpose of this test was to check the fit and function of a 17-inch aluminum track on an AIFV and to complete 100 break-in miles on the FMC test track in San Jose, California.

3. CONCLUSIONS

The 17-inch aluminum track was functionally fit and successfully run for 100 miles on FMC's AIFV DEMO ONE Vehicle.

4. RESULTS

Before starting the test, the vehicle weighed 35160 $\pm$ 70 lb with a full tank of fuel, a driver, and 11,700 lb of ballast weight. The track guide bolts were torqued to 184 lb-ft and the track pins and pads were all set at 130 lb-ft.

The vehicle was run according to the schedule in Table 1 of Test Plan 10275. The test results are recorded in Table 1 of this report. Maximum vehicle speed was 40 mph on the straight and about 33 mph on the turns.

Table 1. Test Data from 100 Mile Fit and Function Test

Miles	Number of Pins Checked	Number of Loose Pins	Comments
5	3	0	No loose guides
10	3	0	No loose guides
25	18	2	Tightened loose pins 1/8 turn
40	16	1	Tightened loose pin 1/4 turn
55	--	--	Visual inspection OK
70	--	--	Visual inspection, all OK
85	--	--	Visual inspection, all OK
100	14	1	Tightened loose pin 1/2 turn. No loose guides or pads found.

Table 2. Aluminum Track Component Weight

Item	Quantity	Total Weight	Average Individual Weight
Shoe Bodies	8	119	14.9
Pads	8	29.3	3.66
Pins	8	11.7	1.96
Guides	8	10.5	1.31
Hardware	8 bolts 8 washers 24 nuts	3.25	.406
Complete Assemblies	10	218	21.8

Track shoes and components were weighed before the test. These weights are listed in Table 2. Average track pad height was .43 inches before the 100 miles and .42 inches afterward. Track pitch measured over ten shoes was 60-1/4 inches before the test and did not change after 100 miles.

The tracks were a little noisy, especially when the vehicle was turning. It appeared that the noise came from the track guides hitting against the idler wheel and the drive bushing engaging the sprocket.

5. DISCUSSION

The test was conducted at the FMC Ordnance Division test track in San Jose, California.

The center of gravity was not measured upon agreement with Project in order to expedite the test. The vehicle was weighed on a digital truck scale. Grouser height was not measured before and after the test because the vehicle rode on the pads so there would be no grouser wear. Torque putty was applied to the sprocket carrier bolts before testing. The putty was all intact after the test so it was not necessary to measure torques afterward.

The instruments to measure drive ring wear, sprocket wear, and track guide thickness are only designed to indicate when these parts are completely worn out. None of the drive rings, sprocket teeth, or track guides wore appreciably during the 100 mile test.

Instrumentation used for this test was:

- balance scale, 1000 lb, OED 5927
- balance scale, 100 lb, OED 5916
- truck scale, ODO 31731
- grouser height gage, 20786 AJA
- track pad gage, 82576 AJA
- sprocket tooth wear gage, 4222584
- track pitch and guide bushing gage, 4222585
- track guide wear, 860210WB

VP0327TR4240

APPENDIX A

Test Plan 10275

AIFV

Test Plan 10275

TEST OF FIT & FUNCTIONALITY OF A 17 INCH ALUMINUM TRACK ON AN ARMORED INFANTRY FIGHTING VEHICLE (AIFV)

Project Authorization 029-400-001

Reference: Test Work Request 831

Contract No. N00167-85-C-006

February 1986

Ordnance Division (Engineering)
FMC Corporation
San Jose California

Prepared By:

J. Johnson
Mechanical Engineer

Approved By:

A. Joyal
Manager, Engineering Test

Reviewed By

System Safety

W. Grusonik
Manager, Suspension System

1. INTRODUCTION

The Marine Corps Program Office of the David Taylor Naval Ship Research and Development Center (DTNSRDC) intends to pursue the development of a 17-inch aluminum block single-pin track as proposed in an FMC Corporation proposal entitled "Manufacture and Test of a 17-inch Aluminum Track, 15-16 Ton Vehicle", dated June 1983.

2. PURPOSE

The purpose of this test is to check the fit and function of a 17-inch aluminum track on an M113 and to complete 100 break-in miles on the FMC test track in San Jose, California.

3. SCOPE

The scope of this test is to perform a 100 mile break-in test and to determine the weight and center of gravity of the vehicle equipped with a 17-inch aluminum track. The vehicle will be ballasted to 17.5 tons and up-powered to 300 hp.

4. TEST PREPARATION

The vehicle will be delivered to Engineering Test completely assembled and ready to test.

Inspect the vehicle for deficiencies critical to the operation of the vehicle.

Weigh five track shoe assemblies and their individual components in order to report an average weight for pins, pads, guides, hardware, and total assemblies (+/- 5 percent).

5. PROCEDURES

Before the vehicle is run on the test track, check the torques and make the baseline measurements noted below:

- Drive ring wear
- Grouser height (eight shoes per side)
- Sprocket carrier torque (170 to 190 ft-lbs.)
- Track guide thickness 2 1/2 inches above shoe body (eight shoes per side)

- o Track pad height (eight shoes per side)
- o Track pitch (over ten shoes per side)
- o Track pin torque, all shoes (126 to 134 ft-lbs.)
- o Track pad torque, all shoes (126 to 134 ft-lbs.)
- o Track guides for looseness
- o Track stretch over ten shoes on each side
- o Vehicle weight and center of gravity (measured by Engineering Test)

Run the vehicle on the San Jose test track at the speeds and distances listed in Table 1. Reverse directions periodically to operate the vehicle for approximately equal distances in the clockwise and counter clockwise directions. Make standard daily vehicle checks.

Table 1. 100 Mile Break-In Test Matrix

Vehicle Speed	Miles to be Run	Checks to be Performed After Each Run
10 MPH	5	Check for any loose track guides and torque on each track pin.
20 MPH	5	Spot check for any loose track guides and torque on track pins.
25 MPH	15	Spot check for any loose track guides on track pins.
25 MPH	15	Spot check for any loose track guides and torque on track pins. Check torque on sprocket carrier mounting bolts.
35 MPH	15	Visual inspection
35 MPH	15	Visual inspection
35 MPH	15	Visual inspection
35 MPH	15	Spot check for any loose track guides and torque on track pins.

After completing the matrix in Table 1, check the torques and make the measurements noted below:

- o Drive ring wear
- o Grouser height (eight shoes per side)
- o Sprocket carrier torque (170 to 190 ft-lbs.)
- o Track guide thickness (eight shoes per side)
- o Track pad height (eight shoes per side)
- o Track pitch (over ten shoes per side)
- o Track pin torque (126 to 134 ft-lbs.)*
- o Track pad torque (126 to 134 ft-lbs.)*
- o Track guide torque (178 to 189 ft-lbs.)*
- o Track stretch over ten shoes (adjust if necessary)

*Check pin, pad, and guide torques on eight shoes per side. If any do not meet specification, then check all shoes. Return the vehicle to Engineering for shipment preparation.

6. SAFETY

Follow appropriate safety practices throughout the test. Make all personnel aware of any potential danger. The following document pertains to this test:

- o ETOP 1036, Safety Requirements and Operation Rules for Test Vehicles

A safety and orientation meeting will be held before the test. Specific test safety precautions include the following:

- o Listening for any unusual noise that may indicate loose track or track components.
- o Frequent visual inspection of the tracks to check for any loose track components.

7. REPORT

A final Technical Report will be written and include all of the information recorded from the test. The test plan may be included as part of the description of the test method, except where the actual conduct of the test deviated from the planned test method.

8. CHANGES IN SCHEDULE AND SCOPE

The Test Director may add or delete tasks, revise the schedule or order of tasks, or make other appropriate changes in the scope of the test. These changes will be made as required to accomplish overall test goals. Circumstances that might require such changes include the lack of available repair or replacement parts, adverse weather conditions, and so forth. All such changes will be documented and completely described in the final technical report.

MAINTENANCE OF THE 17 INCH ALUMINUM TRACK

INSPECTION OF TRACK

Use the following pictures and standards for inspecting the 17 inch Aluminum Track.

These standards indicate wear limits and damage before the track shoes are declared unserviceable.

TRACK SHOE WEAR LIMITS

Measurement	How To Measure It
1. Grouser Height	Measure the grouser height from the road wheel surface of the shoe to the top of the grouser. If the gage reading is more than 0.4 inches, the shoe must be replaced.

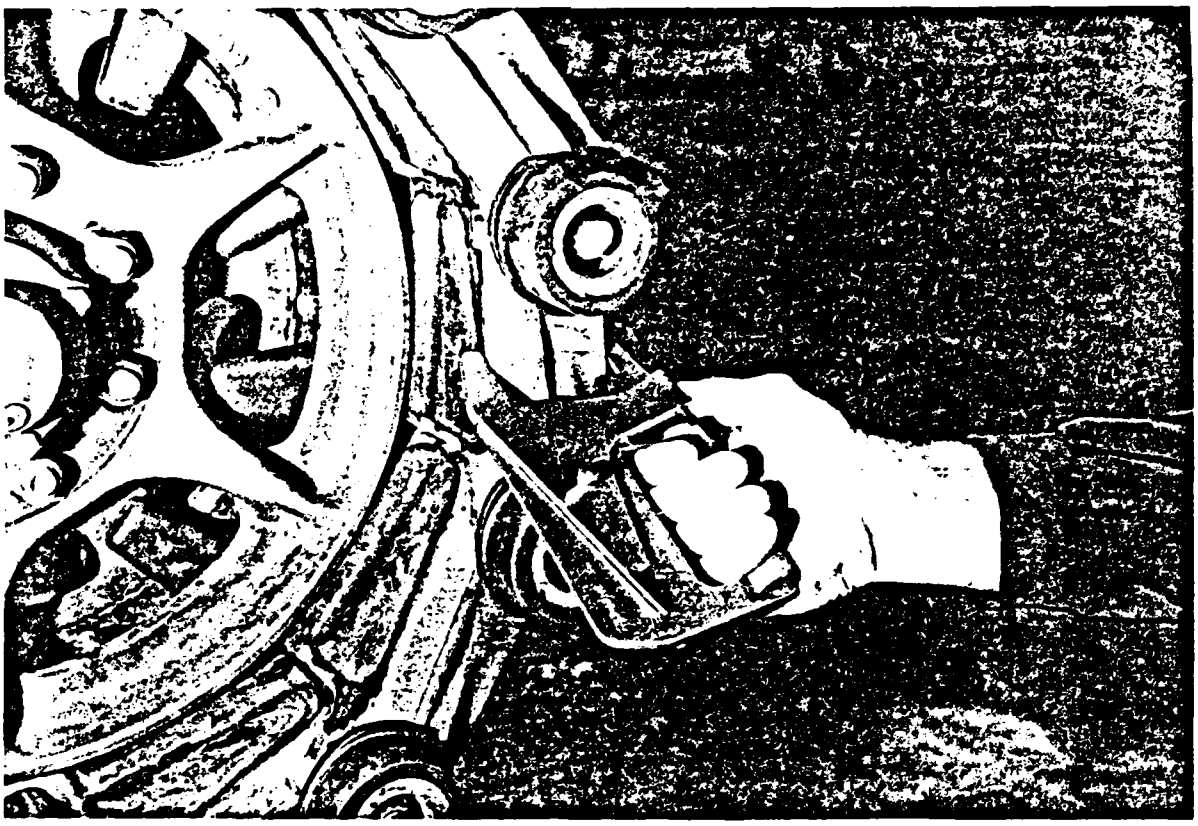

2. Track Pad Wear

Measure the height of the top of the track pad above the grouser. If the gage reading is less than 0.05 inches, the pad is too worn for the shoe and must be replaced.

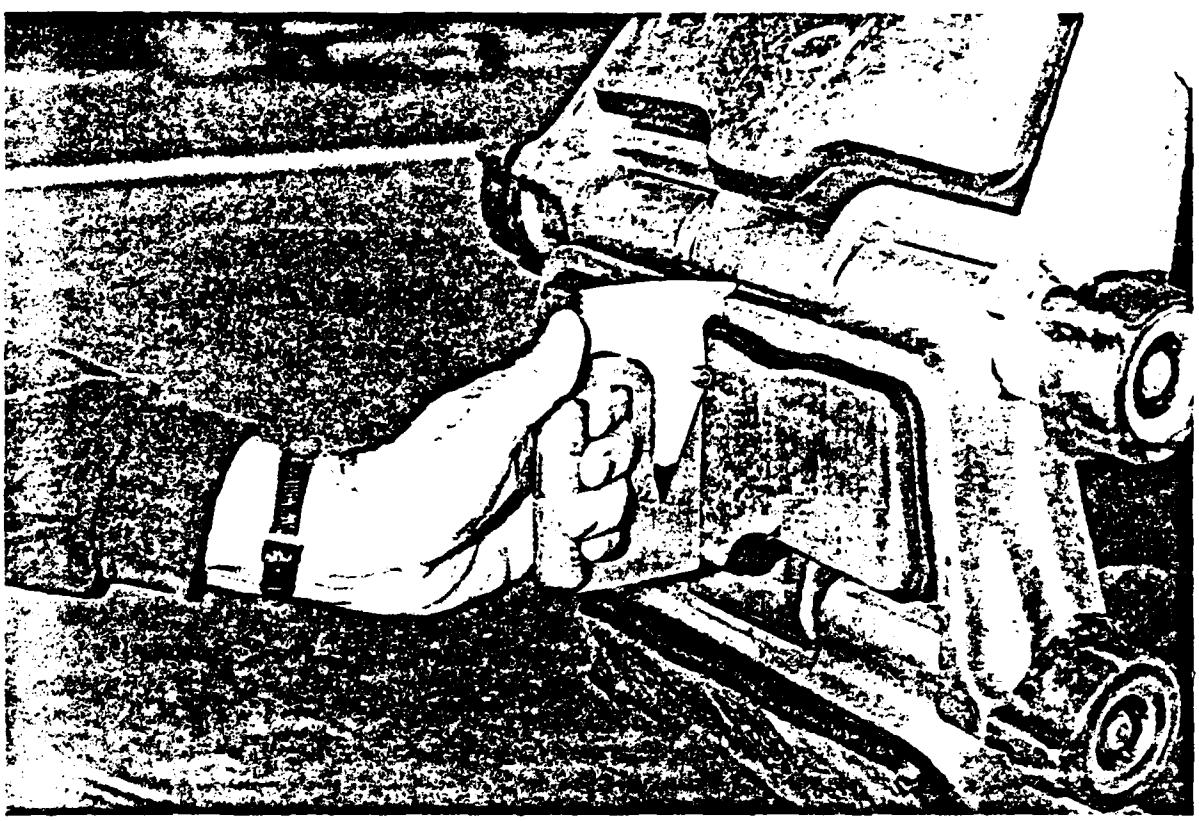

3. Sprocket Tooth Wear — Place the gage in the positioning holes as shown and visually check the sprocket teeth. If a tooth is worn beyond the outline of the gage, the sprocket must be replaced.

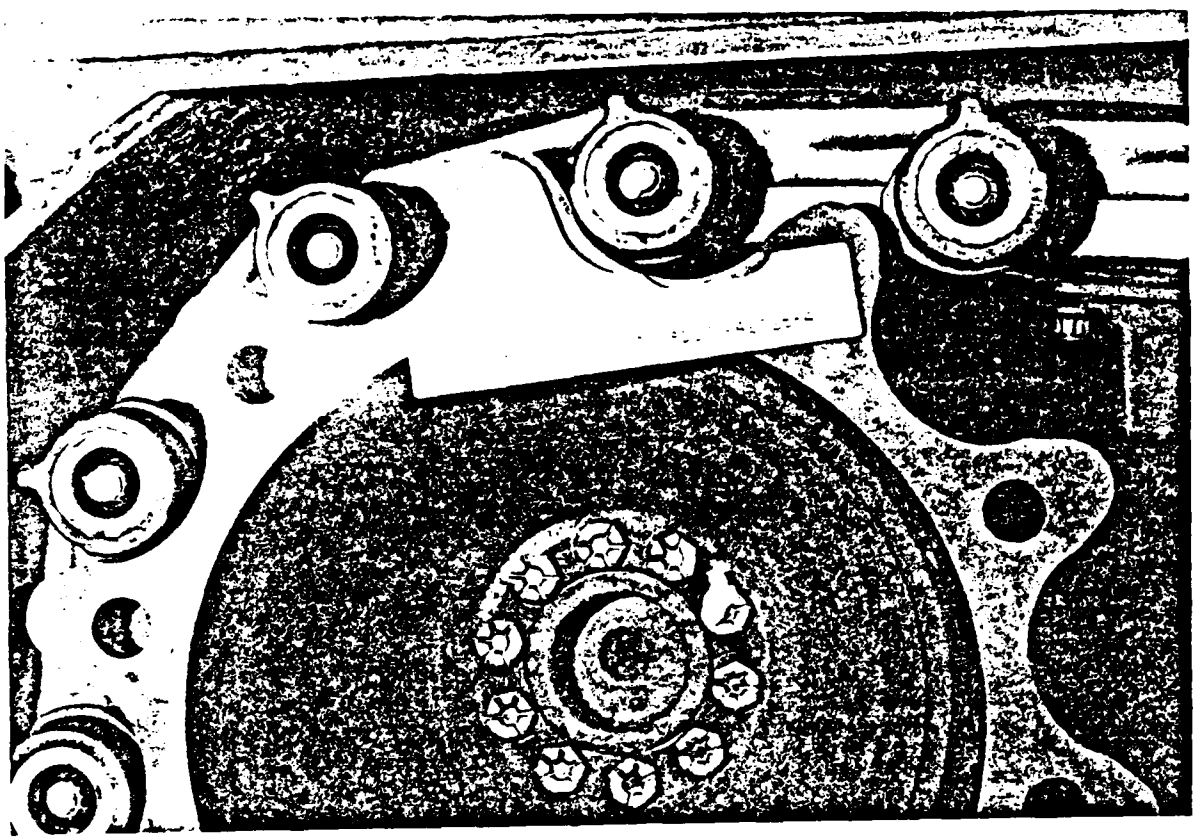

4. Track Pitch

Place the track pitch measurement pins in the boss inside bore. If the distance between bore diameters is too large for the pins the bushings have worn too much and the shoe must be replaced.

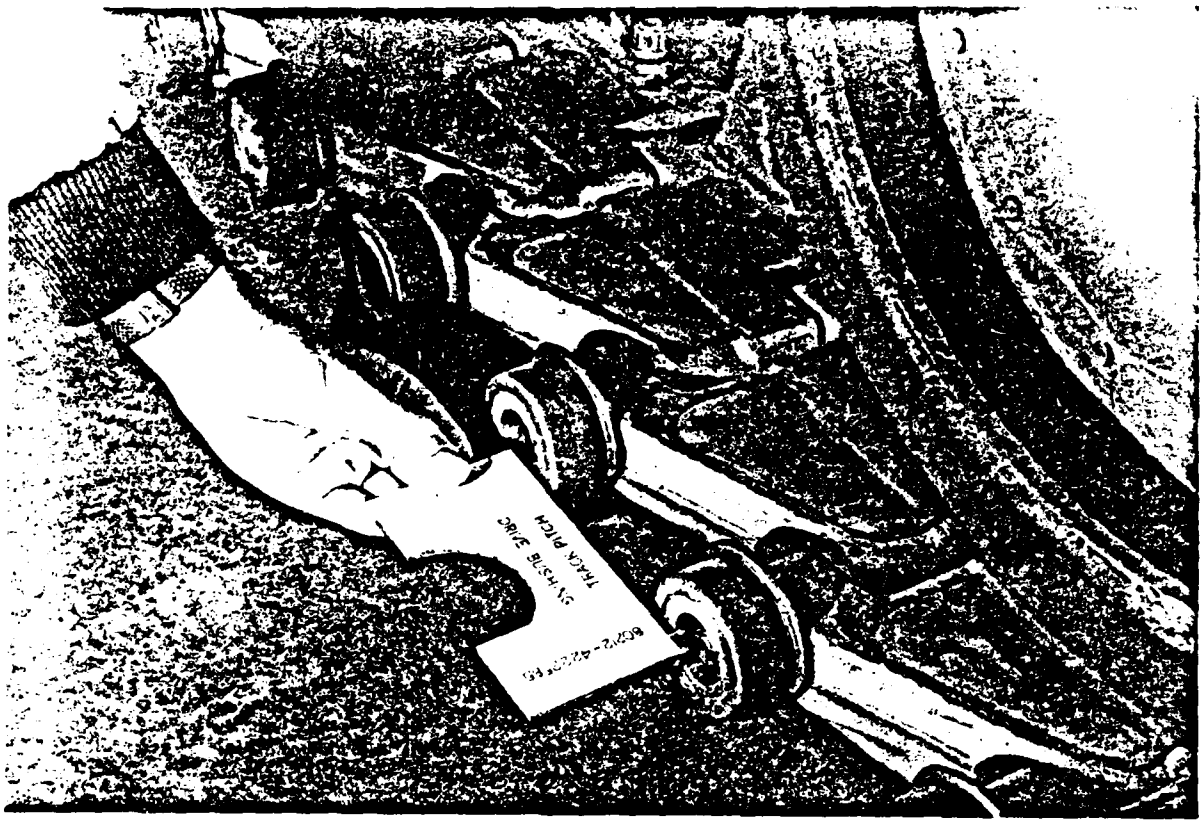

5. Drive Bushing Wear — Place the drive bushing gage over the drive bushing. If the bushing fits into the contoured wear pattern, the bushing is no longer good and the shoe must be replaced.

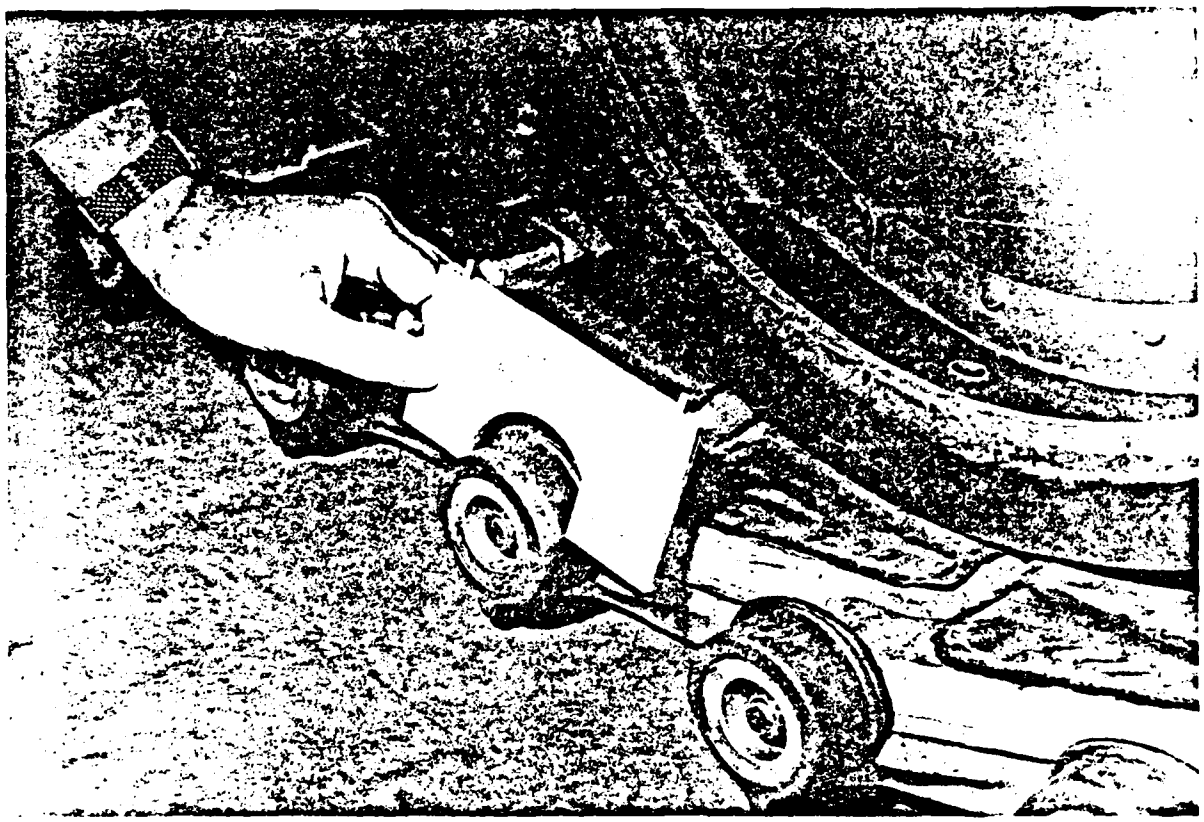

6. Track Guide Wear

Place the track guide wear gage over the track guide and visually check to make sure the minimum thickness and height are obtained. If the guide is below minimum, replace the track guide.

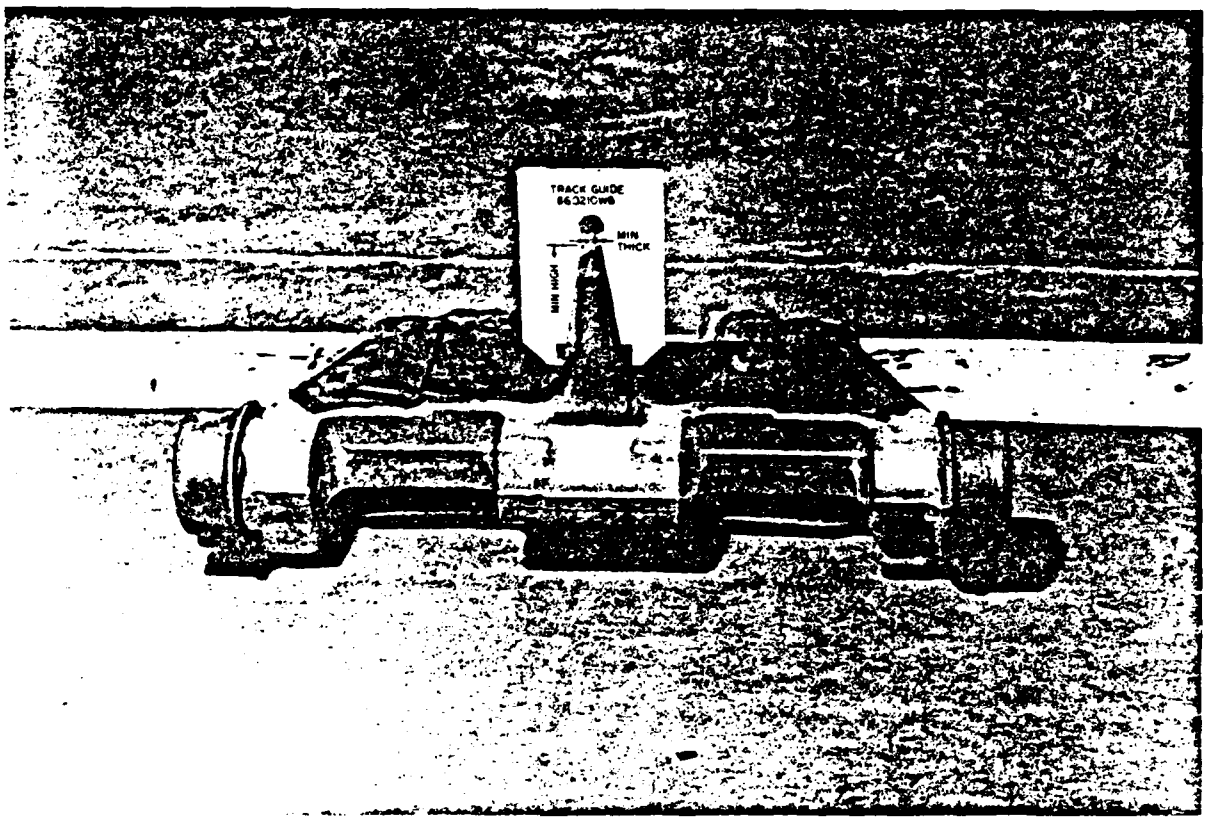

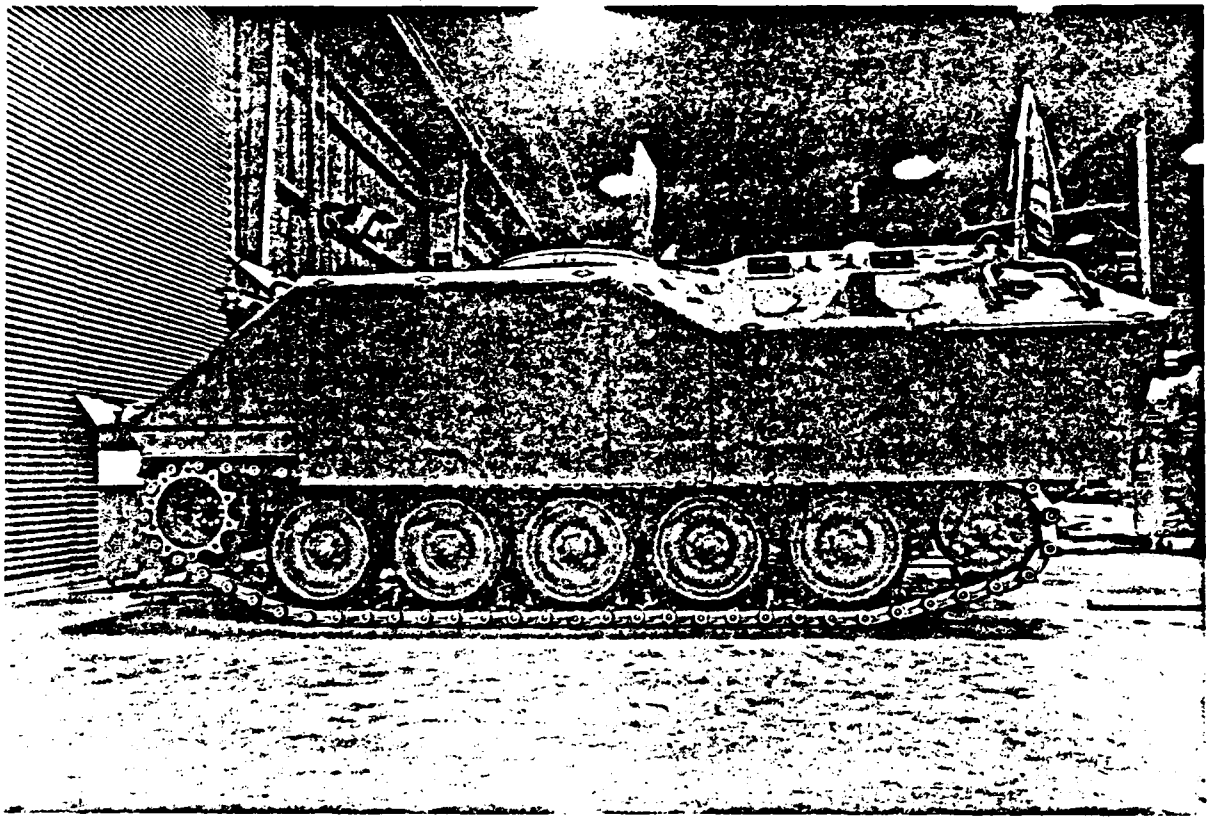

SEVENTEEN INCH ALUMINUM TRACK

SAFETY RELEASE FOR TEST

Prepared by

FMC Corporation, Ordnance Division
San Jose, California 95108

Prepared for

David Taylor Naval Ship Research
and Development Center
(Contract N00167-85-C-0006)

February 1986

Submitted By:

Dean D .Zart
Sr. System Safety Engineer

Reviewed By:

R. P. Kaplan, Manager
Human Systems Development

Reviewed By:

Ray Nehem
Sr. Staff Engineer
System Safety

Approved By:

W. C. Grusonik, Manager
Suspension Systems

TABLE OF CONTENTS

Paragraph	Title	Page
1.0	INTRODUCTION	1
1.1	ACRONYMS AND DEFINTIONS	1
1.1.1	Acronyms	1
1.1.2	Definitions	1
1.2	PURPOSE	2
1.3	SCOPE	2
1.4	FORMAT	2
1.5	CHANGES	2
1.6	TEST DESCRIPTION	3
1.6.1	Limitations	3
2.0	SYSTEM DESCRIPTION	3
2.1	IDENTIFICATION	3
2.2	PURPOSE AND INTENDED USE	3
2.3	THE VEHICLE	4
2.3.1	Engine	4
2.3.2	Transmission	4
2.3.3	Universal Joints	4
2.3.4	Differential	5
2.3.5	Final Drives	5
2.3.6	Seventeen Inch Aluminum Track	5
2.3.7	Suspension System	5
2.3.8	Hull	5
2.3.9	Ballasting	6
2.4	OPERATIONAL/LIFE CYCLE MODES	6
3.0	CONCLUSIONS	6
4.0	SEQUENCE OF OPERATIONS	7
4.1	PREOPERATIONAL INSPECTIONS AND SERVICES	7
4.1.1	Hatches and Ramp	7
4.1.2	Stowage	7
4.1.3	Fueling	7

TABLE OF CONTENTS

Paragraph	Title	Page
4.2	ENGINE STARTING	8
4.2.1	Noise	8
4.2.2	Ventilation	8
4.3	DRIVING UNDER NORMAL CONDITIONS	9
4.3.1	Personnel Protection	9
4.3.2	Rough Terrain Driving	9
4.3.3	Obstacles	10
4.3.4	Slope Operation	10
4.3.5	Reverse Operation	10
4.3.6	Water Operation	10
4.3.6.1	Fording	10
4.3.6.2	Swimming	11
4.3.7	Parking	11
4.4.	EMERGENCY DRIVING CONDITIONS	11
4.4.1	Steering Failure	11
4.4.2	Brake Failure	12
4.4.3	Vehicle Runaway	12
4.4.4	Track Loss or Drive Failure	12
4.4.5	Slave Start	13
4.4.6	Disabled Vehicle Towing	13
4.5	CRITICAL SYSTEMS	14
5.0	SYSTEM HAZARDS	15
5.1	Seventeen Inch Aluminum Track	15
5.2	Sprocket Carrier Mounting Bolts	16
5.3	Splined Input Yoke	16
5.4	Splined Output Shaft	16
5.5	Final Drive Gears	17
5.6	Final Drive Housings	17
6.0	SUMMARY	17
7.0	REFERENCE	18

1.0 INTRODUCTION

1.1 ACRONYMS AND DEFINITIONS

1.1.1 Acronyms

In the context of this Safety Release for Test the following acronyms will apply:

AIFV = Armored Infantry Fighting Vehicle
AVTB = Amphibian Vehicle Test Branch
DTNSRDC = David Taylor Naval Ship Research and Development Center
HSD = Hydrostatic Steering Differential
SIAT = Seventeen Inch Aluminum Track
SRT = Safety Release for Test

1.1.2 Definitions

In the context of this SRT the following definitions will apply:

Seventeen Inch Aluminum Track = A newly designed track subsystem made by connecting consecutive track shoes with single connecting pins for the vehicle's left and right side track laying mechanisms.

Demonstrator Vehicle = A modified Armored Infantry Fighting Vehicle which utilizes a base vehicle identified as "Demo One".

Demonstrator System = The vehicle system resulting from mounting seventeen inch aluminum track subsystems to the demonstrator vehicle.

1.2 PURPOSE

This SRT was prepared for the DTNSRDC under Contract N00167-85-C-006 and in reference to the testing of the demonstrator system. Its purpose is to summarize hazards and recommend hazard controls for the demonstrator system. The developed procedures and precautions for eliminating or controlling the hazards are presented in this SRT and all recommendations should be followed in the operation and maintenance of this demonstrator system.

1.3 SCOPE

This SRT addresses potential test and maintenance operations which may occur during the test and evaluation of the SIAT. The demonstrator system operational modes are discussed in Paragraph 2.1.

1.4 FORMAT

For convenience of use, this SRT is organized according to a sequence of operations expected for a demonstrator system. All of the information regarding pre-operational checks will therefore precede safety information regarding system operation and demonstration testing. It is recommended that this ENTIRE report be read BEFORE beginning any operational or maintenance tasks.

1.5 CHANGES

Modifications to this document may become necessary due to changes in design, operational environments, and test plans. These changes must be coordinated with appropriate FMC System Safety personnel. In the event of a safety field test problem, FMC System Safety should be notified immediately-- call collect, (408) 289-2784.

1.6 TEST DESCRIPTION

The test will be conducted by the DTNSRDC AVTB using the demonstrator system described in Paragraph 2.0. The purpose of this test is to determine feasibility and durability of the SIAT for potential application with future US Marine Corps tracked vehicles from 15 to 18 tons gross vehicle weight.

1.6.1 Limitations

Demonstrator system operation and testing is limited to that described in the DTNSRDC Test Plan 8440, 86-1240-78. The following operational modes are not in the scope of this SRT or the Test Plan.

- o Swimming
- o Towing another vehicle
- o Blackout/Light Secured
- o NBC

2.0 SYSTEM DESCRIPTION

2.1 IDENTIFICATION

This SRT applies only to the following demonstrator system:

- o "Demo One" demonstrator vehicle with modifications
- o Vehicle track is seventeen inch aluminum per FMC dwg 4219265
- o Serial Number, None----hull is stamped as "Demo One"
- o Contract N00167-85-C-006

2.2 PURPOSE AND INTENDED USE

The SIAT has been designed, developed and assembled to a vehicle for track testing and evaluation by the Government. To convenience the actual testing operations, the SIAT has been assembled to a contractor's baseline personnel carrier. These testing activities are to provide information and data for determining aluminum track feasibility and a durability goal of 4,000 miles.

2.3 THE VEHICLE

"Demo One" is an armored vehicle, diesel powered, designed to be fully tracked and capable of carrying a weapons system while maneuvering cross country.

The base vehicle, M113A2, is an armored personnel carrier in world-wide use. Technical Manuals that pertain to this vehicle are as follows:

FMC-AIFV-U-10, Operators Manual
FMC-AIFV-U-10, Supplement, Operators Manual for Components peculiar to AIFV Demonstrator Vehicles.

FMC-AIFV-U-20, Maintenance Manual
FMC-AIFV-U-20, Supplement, Organizations Maintenance Manual for Components peculiar to AIFV Demonstrator Vehicles.

2.3.1 Engine

The engine is a turbocharged Detroit Diesel model 6V53T with fuel injection per FMC drawing 4194767. Modifications from "Demo One" vehicle engine include different fuel injectors that increase engine horsepower from 265 to 300.

2.3.2 Transmission

The transmission is a Detroit Diesel Allison TX 100-1A which provides automatic control and includes three forward selections, one reverse and a neutral position selection.

2.3.3 Universal Joints

The universal joints have 7C ratings.

2.3.4 Differential

The differential includes hydrostatic steering and is illustrated per FMC drawing 420423. This type of differential permits gradual, pivot and axis steering maneuvers through a driver's steering wheel control linkage.

2.3.5 Final Drives

The final drives are illustrated by FMC drawing 11647000. Housing material is type 356 cast aluminum and includes the M548 vehicle reduction gears.

2.3.6 Seventeen Inch Aluminum Track

The SIAT is illustrated in FMC drawing 4219265. The major features of this track design are as follows:

- Single pin 6061 T6 Aluminum track blocks
- Track width is 17 inches; track pitch is 6 inches
- Track incorporates modular/replaceable center guides, rubber road pads and steel drive rings

2.3.7 Suspension System

The additional track shoe width (17 inches) has been interfaced to the demonstrator vehicle by adding 1 inch spacers to each sprocket carrier, idler sprocket and road wheels.

2.3.8 Hull

The standard AIFV has been reconfigured to delete the turret and weapon systems for this test.

2.3.9 Ballasting

By customer request, the vehicle has been ballasted to 17.5 tons gross vehicle weight. This vehicle weight is heavier than the AIFV configuration. To accommodate vehicle braking characteristics, the ballast has been shifted toward the rear of the vehicle to control the vehicle forward motions during strong braking actions.

2.4 OPERATIONAL/LIFE CYCLE MODES

This SRT addresses those simulated tactical operations as listed:

Tracking
Braking
Turning
Backing
Acceleration
Maximum speed
Vertical obstacles/trench crossing
Slope operation
Stowage
Towing
Water operations

Additional operations may be required prior to and during demonstration testing. These include M113A2 automotive chassis maintenance, repair and corrective action operations that are required to resolve problems/ malfunctions that may occur during demonstration testing. These are addressed in this SRT.

3.0 CONCLUSIONS

The SIAT demonstrator system with up-power and up-weight is considered to be marginally safe for the planned test and evaluation program when operated and maintained in accordance with this SRT and the appropriate Operator's and Maintenance Manuals. When the Test Plan is further developed, additional

hazards may be identified which may require analysis and new/revised hazard controls and revisions to this document.

4.0 SEQUENCE OF OPERATIONS

4.1 PREOPERATIONAL INSPECTIONS AND SERVICES

4.1.1 Hatches and Ramp

The hatches could swing, causing a scissoring action between the hatch and hull if not properly latched during vehicle movement. The driver must ensure that the hatches are properly latched prior to moving the vehicle.

The cargo hatch is a quick acting hatch. Restrain hatch cover while opening or closing hatch to avoid injury.

4.1.2 Stowage

Loose items of stowage can become projectiles during cross-country operation or during a vehicle crash, causing injury to personnel and/or damage to other equipment. Prior to vehicle operation ensure that all loose items are properly stowed and/or tied down.

4.1.3 Fueling

Fueling operations are hazardous because of the presence of flammable vapors and liquids which may be ignited by static electrical discharge, hot parts or electrical shorts.

Before fueling the vehicle, stop the engine, place the vehicle master switch in the "OFF" position, and establish a fire point. Bond the fuel nozzle directly to the filler neck by metal-to-metal contact to prevent possible static spark, attach grounding strap, and observe all related safety rules.

Clean up any spilled fuel immediately after fueling to prevent slippery surfaces on the vehicle and possible fire hazards.

4.2 ENGINE STARTING

4.2.1 Noise

Unprotected exposure to noise levels inside the vehicle during operation, and within 10 feet of the vehicle when the engine is running above idle speed, may be sufficiently high to cause permanent hearing damage. All personnel must wear earplugs or other hearing protection when in or about an operating vehicle.

4.2.2 Ventilation

The demonstrator vehicle has been tested for toxic gas accumulation with the engine and heater running and meets toxic gas exposure requirements.

Heater and engine exhaust fumes contain deadly and sometimes odorless gases. Severe exposure can cause permanent brain damage or death. Exhaust gases are most dangerous in enclosed locations with poor access to outside air or when breathing near the exhaust of other vehicles. The best protection for exhaust gas poisoning is a flow of clear fresh air. The following precautions help ensure a safe air supply:

- Don't run the engine of the heater inside any building unless there is a very good flow of fresh air into the building and away from the vehicle.
- Don't idle the engine for long time periods unless there is a flow of clear fresh air into the cab.
- Don't operate the engine if any of the power plant access covers, plates or doors are open/removed.
- BE ALERT AT ALL TIMES. WHEN YOU SMELL EXHAUST FUMES, OPEN THE HATCH/S IMMEDIATELY.
- BE AWARE THAT YOU MAY NOT ALWAYS BE ABLE TO SMELL THE EXHAUST FUMES. When ANYONE shows signs of carbon monoxide gas poisoning get EVERYONE out of the vehicle.

Signs of exhaust gas poisoning include dizziness, headache, loss of muscle control, sleepiness and emotional disturbances. The result of exhaust gas poisoning can include coma, brain damage and death. If anyone complains of dizziness or headache, make sure they have a good flow of fresh air. Keep them warm. Don't let them do hard exercise. Get medical help. If anyone stops breathing, give artificial respiration.

4.3 DRIVING UNDER NORMAL CONDITIONS

4.3.1 Personnel Protection

Seat belts, shoulder harnesses and CVC DH-132 helmets (or equivalent) must be worn by all personnel at all times while the vehicle is being driven. Sharp objects in the cab and protrusions which could injure personnel have been eliminated where possible. Travel over cross-country can, however, cause personnel to be thrown about in the vehicle resulting in personnel injuries. Seat belts and shoulder harnesses are provided and with their proper use will assist personnel from being thrown about within the vehicle.

To reduce hazard exposure to personnel, the number of people in the vehicle should be kept to a minimum during testing. Personnel whose presence is not CRITICAL for the completion of the test or demonstration event should NOT ride in the vehicle.

4.3.2 Rough Terrain Driving

Sudden acceleration, deceleration or change in direction when driving over rough terrain can cause the crew to impact internally mounted equipment. The driver must be careful when operating over rough terrain to protect all crew members. Seat belts and shoulder harness are provided in the vehicle and must be worn during the vehicle operation. Helmets must be worn during vehicle operation to prevent injury to personnel. All loose objects in the cab must be secured to prevent movement. Rough terrain driving should only be done by personnel qualified for general operation of the vehicle.

4.3.3 Obstacles

When operating cross-country, the vehicle could contact large rocks, trees or other solid objects. This should be avoided to preclude damage to equipment or injury to personnel. Cross-country driving should only be exercised by qualified personnel.

4.3.4 Slope Operation

Control vehicle speed while descending slopes by using the brakes and by using the engine and transmission for deceleration. For steep slopes, use low range. The vehicle must be slowed down before the transmission is shifted into low range. To avoid losing control of the vehicle, do not attempt sharp turns when descending steep slopes or when on side slopes. Driving on steep slopes should only be done by qualified personnel.

4.3.5 Reverse Operation

Do not shift transmission gear selector into reverse until the vehicle is completely stopped. Driver's vision to the rear is limited. Do not attempt to shift/operate in reverse unless ground guides are used.

The driver should be aware that during reverse operation the demonstrator system steering mechanism will maneuver the vehicle in the opposite direction in comparison to an automobile. That is, the rear of the demonstrator system will turn in the direction opposite from the direction which the steering wheel is turned.

4.3.6 Water Operation

4.3.6.1 Fording

Water up to 24 inches deep may be crossed by fording. Testing agency should make a water search. Do not attempt to cross water obstacles of unknown depth or unknown bottom conditions. This demonstator system must not be required to

swim. Install all required drain covers, plates and plugs before fording water. Driving into unknown water depths can result in loss of the vehicle. Entanglement of the track or suspension of debris on the lower chassis could result in disablement of the vehicle. Driving through water should only be done by qualified personnel.

4.3.6.2 Swimming

WARNING

This vehicle has not been tested for swimming.

Personnel can drown when this vehicle sinks.

Do not attempt to swim this vehicle.

Vehicles in the AIFV family are generally accepted as swimmers and this demonstrator vehicle is a member of the AIFV family. However, this configuration HAS NOT been tested to verify its swimming capability. Do NOT swim this vehicle.

4.3.7 Parking

Brake lining wear or improper adjustment may cause the brakes to slip when the vehicle is on a steep slope. Parking on steep slopes should be avoided when possible. When it is necessary to park on steep slopes, the tracks should be blocked in addition to setting the brakes before leaving the vehicle unattended.

4.4 EMERGENCY DRIVING CONDITIONS

4.4.1 Steering Failure

When steering failure occurs, keep engine running and apply the brakes until the vehicle stops. Driver should immediately warn the crew to prevent injury to personnel due to rapid vehicle deceleration.

4.4.2 Brake Failure

When service brakes fail during vehicle operation, use the following procedure to stop the vehicle in an emergency:

Apply emergency brake by pulling lever to left of steering wheel towards you. The emergency brake will cause a fast stop and the crew should be prepared. The emergency brake is intended for use one time only and must be inspected following use in an emergency stop to determine if it is suitable for further service. Do not drive further with failed service brakes.

4.4.3 Vehicle Runaway

Throttle linkage jamming may occur due to a lack of lubrication, worn/loose parts or functional characteristics, causing a vehicle runaway. If this occurs for any reason, the driver should continue to steer normally, release the accelerator pedal, and place the fuel control into the "OFF" position. Then apply the vehicle brakes to bring the vehicle to a complete stop.

4.4.4 Track Loss or Drive Failure

WARNING

When track is lost, vehicle braking will be lost and vehicle will tend to go out of control.

Personnel can be killed.

Driver should make every effort to maintain vehicle control by reducing engine throttle with very slight braking/no braking (coast) to continue safe control.

WARNING

When a final drive fails, vehicle braking will be lost and vehicle will tend to go out of control.

Personnel can be killed.

Driver should make every effort to maintain vehicle control by reducing engine throttle with very slight braking/no braking (coast) to continue safe control.

Track loss or drive failure causes loss of steering and braking on the failed side of the vehicle. The transmission will continue to provide braking and power to the remaining functioning side. Therefore, to stop the vehicle and prevent injury to personnel, gradually brake the vehicle. Sudden vehicle deceleration or change in direction could cause personnel to hit internally mounted equipment. The driver must warn the crew immediately of this emergency condition.

4.4.5 Slave Start

When two vehicle electrical systems are connected for a slave start, there is the hazard of getting polarities reversed, causing electrical system damage and possible battery explosion. Make sure the cable prongs match the receptacle holes, "+" to "+" and "-" to "-".

4.4.6 Disabled Vehicle Towing

WARNING

When towing with this demonstrator vehicle, powertrain components can fail causing loss of vehicle control.

Personnel can be killed.

Do not tow or pull external loads with this demonstrator vehicle.

The demonstrator system has never been tested for towing/pulling external loads. Towing operations should never be attempted when using the demonstration system as the towing vehicle (see Paragraph 1.6.1).

The demonstrator system can be towed by another vehicle when in a disabled condition. Always disconnect HSD pump drive shaft of the demonstrator system when being towed. When towed for more than 48 km (30 miles) or at a speed greater than 16 km/hr (10 mph) the universal joints between the final drives and the differential must also be disconnected. Failure to do so may damage transmission and/or differential through overheating by lack of lubrication. Use tow bars only (not tow chains) when universal joints have been disconnected.

Disabled demonstrator system must have transmission selector placed in neutral (N) position and brakes must be released prior to towing. Driver of disabled vehicle should remain with the vehicle during towing to assist with braking when universal joints are connected.

4.5 CRITICAL SYSTEMS

The steering, brake, drive and suspension systems are considered safety critical systems because malfunction can cause loss of vehicle control, injury to personnel and damage to equipment. Critical systems parts must be inspected for wear or damage and defective parts replaced in accordance with wear limits defined in the maintenance manuals.

In maintenance and adjustment of these systems, the following general rules should be observed:

- Never reuse locknuts. Always use new locknuts.

- Never reuse cotter pins. Always install new cotter pins.
- Always replace damaged or worn parts with the proper replacement part. Do not substitute parts.

5.0 SYSTEM HAZARDS

The demonstrator system has been up-powered 16% to 300 horsepower (from 265 hp). The gross vehicle weight has been ballasted to 35,000 pounds (from 30,175 pounds), a 16% increase. These added parameters increase component criticality and reduce powertrain component life expectancy. Available components were used to assemble this demonstration vehicle. Some identified components may not survive the severe phases of this 4,000 mile test. The primary demonstration system hazards discussed in this System Hazards paragraph are principally in the powertrain subsystem. These are physically located in the system such that when total component failure occurs, the demonstration system becomes uncontrollable. An uncontrolled vehicle in motion can become a high risk, as there is crash/overturn potential. In all conditions, it becomes imperative that the driver always be aware of the risks. In emergency situations, maximum driver skills are to be fully utilized for safely controlling and stopping the system. To offset component failure potentials, preventative maintenance checks are identified and should be consistently initiated and documented.

5.1 SEVENTEEN INCH ALUMINUM TRACK

The SIAT is the primary subsystem under test. Testing SIAT has not previously been conducted with a 17.5 ton vehicle. It is possible that the SIAT could fail as the life expectancy has not been validated. Due to the demonstration system's dynamic characteristics, the track potentially can be thrown. As with any experimental testing, these events must be realized and expected.

Recommendation: Driver is to be aware of potential track throwing/failure particularly during severe steering/tractive efforts. The driver should prepare to control the demonstrator system after failure and bring system to a safe stop.

5.2 SPROCKET CARRIER MOUNTING BOLTS

Track sprocket carrier mounting bolts have been torqued in place. All bolts have torque putty applied for checking purposes. Normal vehicle travel surfaces should not effect torque maintenance. During high torque loading (mud/ steering), high shear loads can develop which tend to stretch bolts and displace threads resulting in bolt torque loss.

Recommendation: Check torque putty daily for cracks or immediately after sprocket motion has been identified. Retorque bolts as required.

5.3 SPLINED INPUT YOKE

During high torque travel requirements (mud/sharp steering on high frictional surfaces), the external spline could take a permanent set (twist). The shaft twist effect may eliminate the required linear sliding action and a bearing thrust load causing pinion bearing failure.

Recommendation: Visually inspect the exposed spline area immediately on the external splined yoke end for radial twist every 500 miles or after extreme steering/travel loads. This shaft should be replaced after radial twist has been identified.

5.4 SPLINED OUTPUT SHAFT

Similar to the external spline of the input yoke, the external spline of the output shaft can take a permanent set (radial) while traveling with high torque requirements (mud/sharp steering on high frictional surfaces). Permanent twist may limit the required linear spline action to induce output gear bearing thrust loading and eventual bearing failure.

Recommendation: Partially disassemble to visually check for permanent spline twist. The shaft should be replaced after radial twist has been identified.

5.5 FINAL DRIVE GEARS

Due to potential high gear loading and lack of testing higher gross vehicle weights to validate gear life, it is possible to fail the gears under extreme conditions. Failed gears may cause sudden catastrophic events including noise and abrupt loss of vehicle control.

Recommendation: Make every effort to control the vehicle by reducing engine throttle with very slight braking/no braking to maintain safe vehicle control. Bring vehicle to a complete stop.

5.6 FINAL DRIVE HOUSINGS

The demonstrator vehicle has early design cast aluminum final drive housings. Housing material specification is the M548 original design. Since that time, the housing design has been improved. Historically and during vigorous vehicle testing, these early type housings have been known to crack. Aberdeen Proving Grounds testing have experienced cracked housings when testing 35,000 gross vehicle weight (M113 stretched) vehicles. In the demonstrator system, these housings can be expected to crack on the inner large diameter near the flange radius. This will cause sudden bearing support failure and shaft misalignment due to high stress shock/bearing loads.

Recommendation: This area is to be checked daily for the first month of testing by feeling for cracks or visually inspecting for external oil leaks; weekly during the balance of the test. More frequent checks (twice daily) should be made after vehicle has experienced known high shock loads.

6.0 SUMMARY

Hazard analysis of the SIAT has been conducted to determine possible characteristics which may affect personnel safety or equipment. The primary concerns remain in the limited design of the powertrain, the experimental SIAT and the related components. Each is addressed in this SRT, along with the appropriate user inspections and actions to control these hazards.

In addition, this SRT addresses many hazards, some of which are general to tracked vehicles and specifically the M113A2 and AIFV vehicles.

Because of possible changes in the Government test plan, this analysis may not include all safety information pertinent to testing. Thus, testing other than that defined in the Master Test Plan should be discussed with FMC System Safety personnel, (408) 289-2784, prior to testing.

The reliable and rugged M113 design is the most widely used tracked vehicle in the free world. More than 70,000 vehicles are in service in 44 nations worldwide. With the M113A2 and AIFV vehicle integrated features, the SIAT demonstrator system is considered marginally safe for its intended use when operated and maintained in accordance with the listed Operator's and Maintenance Manuals and this SRT.

7.0 REFERENCE

"Master Test Plan for the Feasiblity Testing of Seventeen Inch Aluminum Track for Future Marine Corps Tracked Vehicles" by David W. Taylor Navel Ship Research and Development Center Bethesda, Maryland 20084; Document identified as 8440, 86-1240-49.

Misc. Family

Stress Report 990.303.312.002

Track Assembly 4219265

Project Authorization Number 029-200-001

23 July 1985

Ordnance Division Engineering
FMC Corporation
San Jose, California

Prepared By:

D. Slattery
Stress and Dynamics

Reviewed By:

J. Hendriks
Stress and Dynamics

Approved By:

J. Huber, Manager
Stress and Dynamics Group

S. Kraus, Manager
Engineering Analysis

Track Assembly 4219265

Introduction

Track assembly 4219265 is a 17 inch single-pin forged aluminum (6061-T6) track shoe with a bolted-on steel track guide and shrunk-on steel drive bushings. In this report, various calculations are made relating to the design and development of this aluminum track shoe. This report was made in response to a request of W. Bilkiewicz for a rewritten version of Stress Report 990.303.312.001 that would eliminate early design iterations, use all the current data and address some new considerations.

Purpose

This study was made to determine the following:

1) Bearing stresses in shoe due only to guide bolt preloads.

2) Stresses in shoe and guide due to guide bolt preloads and side load on guide.

3) Stresses in shoe and bushing due only to shrink fit of bushing on shoe.

4) Stresses in shoe and bushing due to shrink fit and a driving load on bushing.

5) Preloads and installation torques of the guide bolts.

6) Effects of 600°F bushing assembly temperature on shoe.

7) The minimum torque that could cause rotation (slipping) of the bushing after it is shrunk on.

8) Effect of 350°F rubber curing operation on the shrink fit.

Results

Results 1-8 below correspond to purposes 1-8 above.

1) Bearing stresses of guide on shoe due to preloads only, in region of 9/16 and 5/8 bolts, respectively: 26,200 and 23,400 psi.

2) Max bearing stresses of guide on shoe due to preload and specified 5000 lb side load, in region of 9/16 and 5/8 bolts, respectively: 39,000 and 36,300 psi.

Max equivalent stresses due to bending and shear in guide runner leg, in region of 9/16 and 5/8 bolts, respectively: 104,000 and 110,000 psi.

3) Max equivalent stresses due to shrink fit only (at inner edges and with max interference) of steel bushing and shoe boss, respectively: 33,800 and 26,500 psi.

4) The most critical stresses due to the shrink fit and the driving load of the bushing are the stresses in the aluminum boss under the inner end of the bushing (points A and B, page 17). The max equivalent stresses there (at A and B, respectively) are 31,500 and 31,000 psi.

5) All the guide related stresses above assume preloads of 18250 lb and 23000 lb in the 9/16 and 5/8 bolts, respectively. The calculations show that these preloads will result if the following procedures are used:

   5.1) Lubricate all bolting friction surfaces with SAE 20 to 30 machine oil.
   5.2) Torque the 9/16 bolt to 162 ft-lb.
   5.3) Torque the 5/8 bolt to 174 ft-lb.

6) The following are the approximate effects of the bushing assembly temperature on the aluminum under the bushing. (The aluminum there is assumed to be at the high temperature for one minute.)

   Ref: MIL-HDBK-5D curves for 6061-T6.
   % = percent of room temperature property.
   YS = yield strength
   E = elastic modulus

	Bushing Assembly Temperature:	
	600°F	400°F
Effect on YS at the high temp:	30 - 100%	75 - 100%
Effect on E at the high temp:	70%	90%
Effect on YS after return to room temp:	60 - 100%	100%

7) At the minimum interference (.003 inch on the diameter), the torque to rotate the assembled bushing on the shoe is 22,000 lb-in.

8) During the 350°F rubber curing operation, due to aluminum's greater coefficient of thermal expansion, the aluminum "ring" under the steel bushing will tend to grow more than the steel, increasing the interface pressure. This increased pressure will result in yielding of at least the inner surface of the aluminum ring, for all the possible values of interference in the tolerance range. Exposure to 350°F for 20 minutes will not cause any permanent reduction in the aluminum strength.

Conclusions

Conclusions 1-8 below correspond to items 1-8 above.

1) To calculate the bearing factor of safety, the appropriate material property is the bearing yield strength of 6061-T6. Per FMC Design Manual, this is 54,000 psi. Therefore minimum FS here is 2.06.

2) Again using the aluminum bearing yield strength, the minimum FS here is 1.38.

   The yield strength of the guide is found to be 170,000 psi, so the minimum FS in the guide legs is 1.55.

3) Bushing yield strength is 170,000 psi, so the FS here is 5.0. Compressive hoop stress of the shoe boss inner surface should be considered a compressive stress, not a bearing stress, so the compressive YS of 6061-T6 should be used. Per FMC Design Manual, this is 35,000 psi. Therefore the FS here is 1.32.

4) With the maximum specified drive load (14,000 lb) on the bushing, the aluminum shoe boss maximum equivalent stress of 31,500 psi results in a FS of 1.11.

5) Great care must be taken to control the guide bolts' preloads. If the actual preloads and assembly torques deviate too far from those specified here, either gapping or yielding of the guide/shoe joint will result under the 5,000 pound side load.

6) With assembly at 600°F, there will probably be no yielding, but there will probably be some permanent reduction in the aluminum yield strength in the region under the bushing. It is not known if this permanent reduction in strength in a limited region would be a problem. This reduction in strength could be avoided by assembling at 400°F and also chilling the shoe, if necessary, for assembly clearance. The alternative is to make an assembly in the desired manner and test it to determine if there is sufficient strength and

tightness. Further analysis would be extremely complicated, probably involving finite element analysis with heat transfer, temperatures changing, all material properties changing and possibly gap elements and elastic-plastic behavior.

7) I draw no conclusion from result #7.

8) Since the inner surface of the aluminum will yield during the 350°F rubber curing operation, there will be some loss of tightness of the bushing. To determine the amount of loss of tightness would require determining the radial distribution of residual stress caused by local yielding, which in itself would require a fairly elaborate study, probably using elastic-plastic finite element analysis. Without such an analysis, I can only offer these simple suggestions (do one or the other):

   8.1) Rearrange the order of operations so that the shoe boss is still solid (not drilled out) during the 350°F operation, or assemble the bushing after the 350°F operation.

   8.2) Build and test. (Test at minimum track operating temperature, when bushing will be loosest.)

Discussion

Per discussions with O. Wong and B. Bilkiewicz, all loads in this study are taken to be static. No fatigue analyses are done. If fatigue loads on the guide or bushing can be identified, analysis or testing of fatigue in the bolted and shrunk-on assemblies should be performed.

For maximum side load capability, without gapping, the guide should be designed and assembled such that the bearing stress in the aluminum is exactly half of the bearing yield strength. Then, one side will yield just as the other side gaps. The guide herein is close to this optimum condition.

Guide bolt tightening torques are specified with lubrication because this should result in less preload variation than a "dry" specification. Shigley (Mechanical Engineering Design, 3rd ed., p. 246-247) relates test results that showed preload standard deviations of 9% and 15% of the mean for lubricated and dry conditions, respectively. Measuring bolt stretch would be the best way to control preload, but if this is not feasible, I recommend using the lubricant and torques specified. Dry (higher) torques can be specified, but they will not control preload as well. It should be noted that the FMC preload tables are based on a rule-of-thumb formula (T=.15FD) which is not very accurate. The tightening torques specified here are based on the work of Falzone (1964), as recommended and provided by John Huber.

The assumption is made that the force distribution along the runners (due to side load only) is uniform. This assumption was adopted because the steel guide is bearing on aluminum, which is only 1/3 as stiff, so the guide is assumed to tilt in a rigid manner on an elastic base, resulting in uniform force distribution for side load reaction. Separate areas are established for the 5/8 and 9/16 bolt regions. Total forces in each area (for side load reaction) are calculated using the area ratios. Finally, these are super-imposed on the separate area' bolt clamping loads and total stresses are calculated.

The FMC Design Manual formula for 3-D equivalent stress is used. (It is rare in the literature, but invaluable for this purpose.) Use of this formula eliminates the need to solve the cubic stress equation for 3-D equivalent stress problems.

Since this report contains all the final iterations of Stress Report 990.303.312.001 with some revisions and some changes, this report supersedes Stress Report 990.303.312.001. See that report for previous design iterations.

FMC Corporation

ENGINEERING SHEET

Division: ODE

Project: 029-200-001

Page 1 of ___

Title: TRACK ASS'Y 4219265

Task # 1:

Determine bearing stresses (+FS's) on shoe 4217772 just due to bolt preloads of guide 4217172:

TRACK ASSEMBLY 4219265: (reduced)

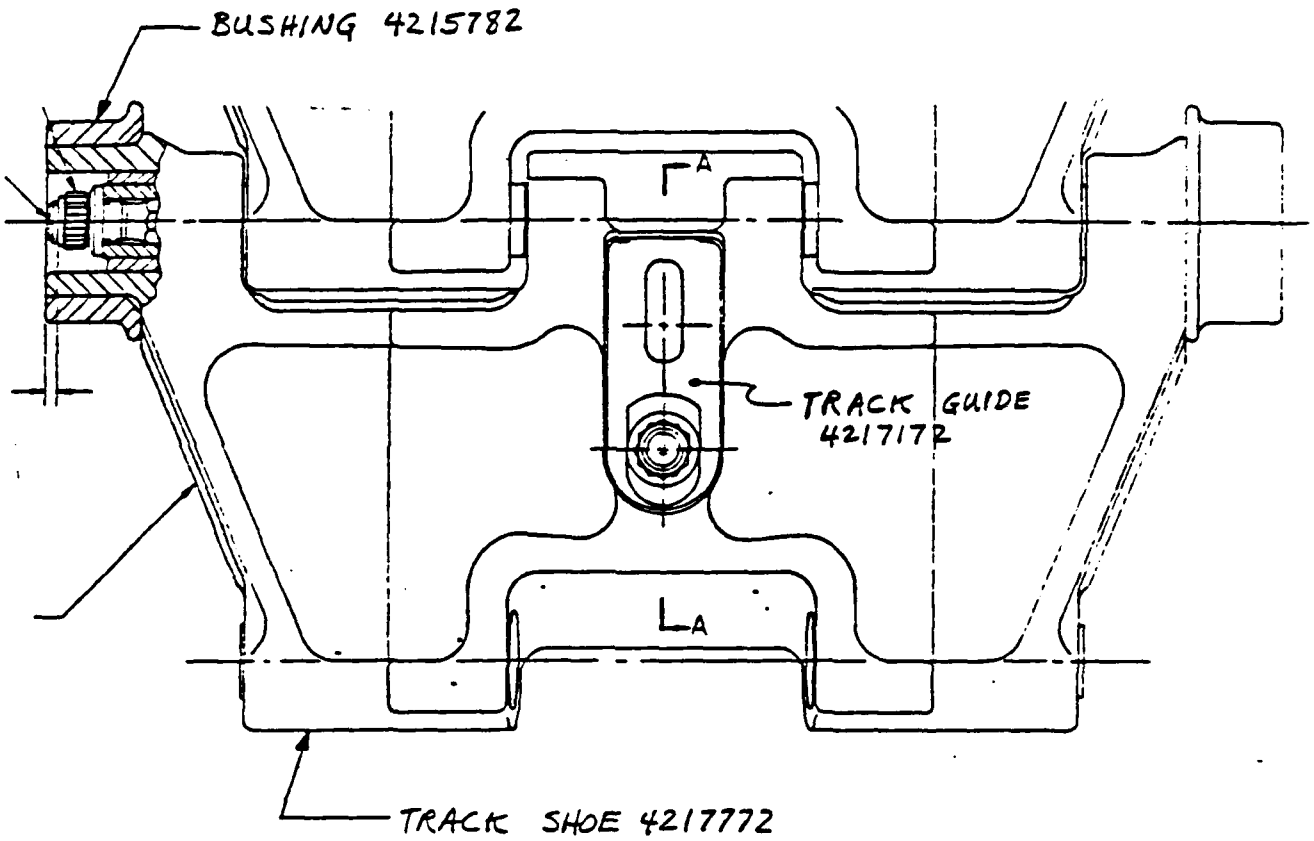

Signature	Date of Signature	Date of Completion	Witnesses Signatures	Date of Signature	Date Understood
G. Slattery	7-18-85		1		
			2		

Form No. 3145 (SJ 10/75)

FMC Corporation

ENGINEERING SHEET

Division: ODE

Project: 029-200-001

Page 2 of ___

Title: TRACK ASS'Y 4219265

Task 1, cont'd:

TRACK GUIDE 4217172: (reduced)

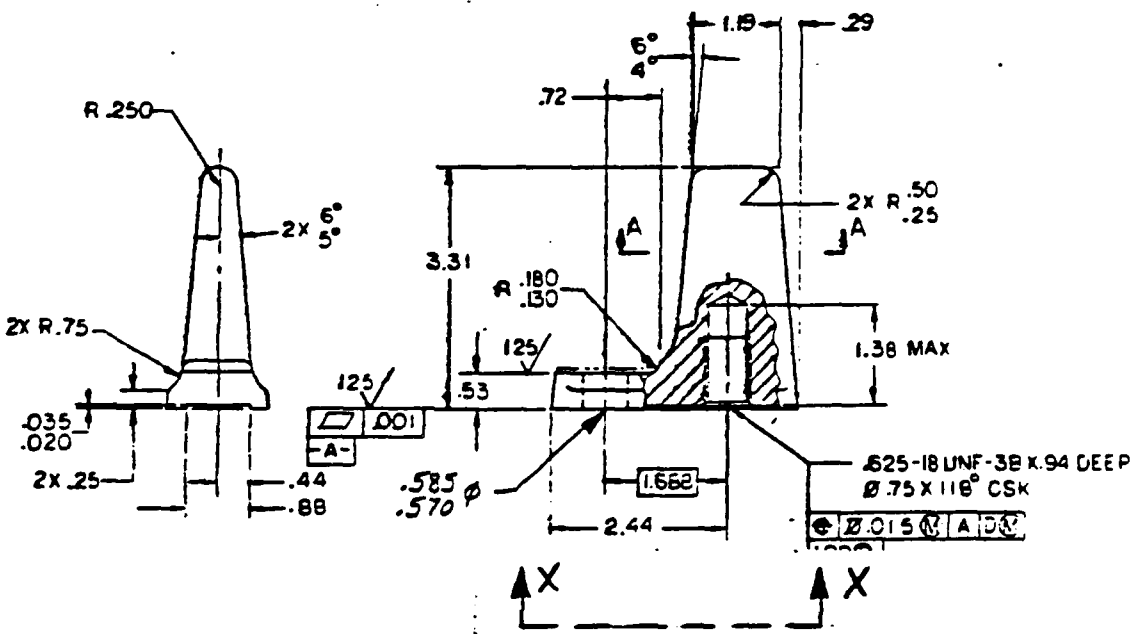

View X-X: (full scale)

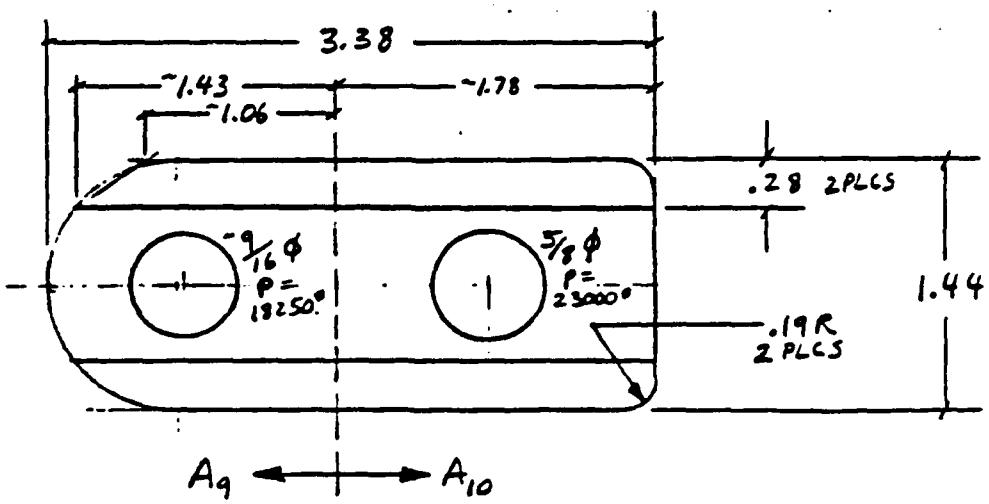

Signature	Date of Signature	Date of Conception	Witnesses Signatures	Date of Signature	Date Understood
D. Slattery	7-18-85		1		
			2		

Form No. 3146 (SJ 10/75)

FMC Corporation

ENGINEERING SHEET

Division: ODE
Project: 029-200-001
Page 3 of ___

Title: TRACK ASS'Y 4219265

Task 1, cont'd
mat'l properties:

Shoe 4217772: Al forging 6061-T6, QQ-A-367.
Per FMC Design Manual:
σ_y = 35. KSI = YS
σ_{by} = 54. KSI (= "bearing" yield strength)

(Per conversation w/ J. Hendricks 4-16-85: σ_y is the tensile, or "compressive", yield strength. It should be used where stresses are parallel to a surface. σ_{by} is the "bearing" yield strength and should be used where stresses are compressive and perpendicular to a surface. This distinction will be used throughout this analysis.)

Guide 4217172: steel; 4140, 8640 or 5145 to HRC 40-45.
Per J. Huber, 4-10-85, determine guide YS as follows:
1. assume 5145 has highest YS since it has highest carbon (.45). ∴ neglect it.
2. Look up 4140 & 8640 in Bethlehem Steel Handbook:
   4140 (HRC 40) YS ≅ 170. KSI
   8640 not available
   8740 (HRC 40) YS ≅ 180. KSI

∴ take guide YS = 170. KSI

Bushing 4215782: mat'l's identical to guide.

∴ bushing YS = 170. KSI also.

Signature	Date of Signature	Date of Correction	Witnessed Signature	Date of Signature	Date Understood
G. Slattery	7-18-85		1		
			2		

Form No. 314S (SJ 10/78)

Task 1 cont'd:

Bolt preloads:

Per O. Wong + W. Bilkiewicz, the preloads should be the standard preloads for grade 8 bolts from the FMC Des. man.

∴ 9/16-18 bolt preload = 18,250. lb.

5/8-18 " " = 23,000. lb

(This same FMC preload table shows the assembly torques that should produce these preloads. The assembly torques are from the rule-of-thumb formula: $T = .15Fd$. Shigley (Mech Engr Des, 3rd ed) recommends: $T \approx .20Fd$. John Huber, 4-2-85, specified that the assembly torques should not be based on either formula but must be calculated from the Nomogram & friction data of Falzone. This will be done later in this analysis. For now, assume the preloads are 18250 & 23000 and calculate the exact assembly torques needed to achieve these preloads later.)

View X-X on p. 2 shows the base of the track guide and the .28"-wide "runners" that will take the bearing load. A_9 and A_{10} are the runner areas assumed to correspond to the 9/16 and 5/8 bolts, respectively (A_{1-8} were used in previous iterations). The dashed line is simply drawn ½-way between the hole centers.

Signature	Date of Signature	Date of Correction	Witnesses Signatures	Date of Signature	Date Understood
G. Slattery	7-19-85		1		
			2		

FMC Corporation

ENGINEERING SHEET

Division: ODE
Project: 029-209-001
Page 5 of ___

Title: TRACK ASS'Y 4219265

Task 1, cont'd

From View X-X, p. 2:

$$A_9 \approx 2\times\left(\frac{1.43+1.06}{2}\times .28\right) = .697 \text{ in}^2$$

$$A_{10} = 2\times\left(1.78\times .28 - \left(.19^2 - \frac{1}{4}\pi .19^2\right)\right) = .981 \text{ in}^2$$

$\therefore$ brg $\sigma_9 = 18250/.697 = \underline{26,200. \text{ psi}}$

brg $\sigma_{10} = 23000/.981 = \underline{23,400. \text{ psi}}$

This is a bearing σ on Al $\therefore$ use $\sigma_{by} = 54$ KSI (p. 3)

$\therefore$ FS in Al due to brg σ in $A_9 = 54/26.2 = \underline{2.06}$

" " " " " " " " $A_{10} = 54/23.4 = \underline{2.31}$

Signature	Date of Signature	Date of Conception	Witnesses Signature	Date of Signature	Date Understood
D. Slattery	7-19-85		1.		
			2.		

Form No. 314S (SJ 10/75)

FMC Corporation

ENGINEERING SHEET

Division: ODE
Project: 029-200-031
Page 6 of ___

Title: TRACK ASS'Y 4219265

Task #2:

Find brg. σ's + FS's of guide on shoe due to preloads and specified 5000# side load (as shown below). Also, find max σ's due to bending and shear of guide runner leg (as shown below).

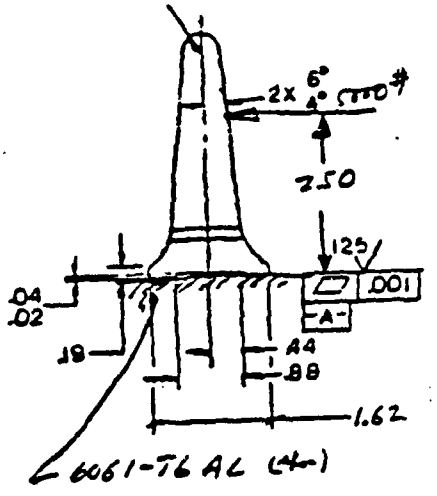

← Guide 4217172 showing side load of 5,000 lb at ht. of 2.50", as provided by O. Wong.

∴ Base moment is:

$M = 5000 \times 2.5 = 12{,}500$ lb-in

Full scale view of guide base showing how "legs" are cantilevered. →

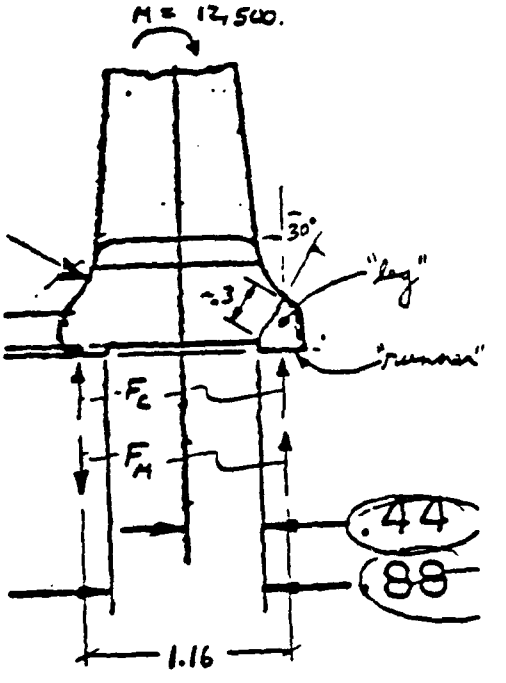

F_c = forces due to Clamping of bolt preloads.

F_M = forces due to reaction of 12500 lb-in Moment.

Signature	Date of Signature	Date of Correction	Witnesses Signature	Date of Signature	Date Witnessed
D. Slattery	7-19-85		1		
			2		

Form No. 3145 (SJ 10/75)

FMC Corporation

ENGINEERING SHEET

Division: ODE
Project: 029-200-001
Page 7 of ___

Title: TRACK ASS'Y 4219265

Task #2, cont'd:

Loads in A_9:

$F_{c_9} = 18250/2 = 9125.$ lb

$F_{M_9} = (12500/1.16) \times \frac{.697}{.697+.981} = 4476.$ lb

∴ max load on one runner in area A_9 is:

$9125 + 4476 = \underline{13{,}600.}$ lb

Loads in A_{10}:

$F_{c_{10}} = 23000/2 = 11{,}500.$ lb

$F_{M_{10}} = \left(\frac{12500}{1.16}\right) \times \frac{.981}{.697+.981} = 6300.$ lb

∴ max load on one runner in A_{10} is:

$11500 + 6300 = \underline{17{,}800.}$ lb

check F_M's: $(4476 + 6300) \times 1.16 = 12500 =$ applied M ✓

check for gapping:

$9125 > 4476$ ∴ no gapping in A_9

$11500 > 6300$ ∴ " " " A_{10}

Signature	Date of Signature	Date of Conception	Witnesses Signatures	Date of Signature	Date Understood
D. Slattery	7-19-85		1		
			2		

Form No. 314S (SJ 10/75)

FMC Corporation

ENGINEERING SHEET

Division: ODE
Project: 029-200-001
Page 8 of ___

Title: TRACK ASS'Y 4219265

Task #2, cont'd:

max al bry σ in A_9:

$$\sigma = 13600/(\tfrac{1}{2} \times .697) = \underline{39{,}000.\ psi}\ \text{bry}$$

$$\therefore \text{min FS on al bry in } A_9 = \frac{54}{39} = \boxed{1.38}.$$

$> 1.0 \therefore OK$

max al bry σ in A_{10}:

$$\sigma = 17800./(\tfrac{1}{2} \times .981) = \underline{36{,}300.\ psi},\ \text{bry}.$$

$$\therefore \text{min FS on al bry in } A_{10} = \frac{54}{36.3} = \boxed{1.49}$$

$> 1.0 \therefore OK$

Signature	Date of Signature	Date of Completion	Witnesses Signatures	Date of Signature	Date Understood
D. Slattery	7-19-85		1.		
			2		

Form No. 3146 (SJ 10/75)

FMC Corporation

ENGINEERING SHEET

Division: ODE
Project: 029-200-001
Page 9 of ___

Title: TRACK ASS'Y 4219265

Task #2, cont'd:

Find σ_{max} and τ_{max} in runner leg in section indicated in sketch, p. 6.
Use following technique: (per discussion w/ J. Hendricks, 3 Jun 85)

Estimate max stress section (sketch, p. 15).
Scaled thickness ≈ .2, angle ≈ 30°, as shown.

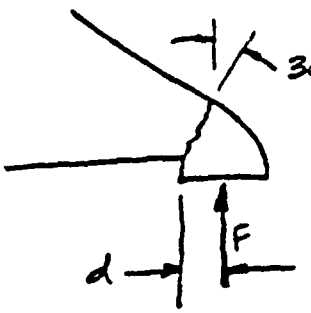

$$\therefore \sigma_{max} = My/I + F\sin 30/A \qquad \text{(EQ. \#1 A)}$$

$$\text{and } \tau_{max} = 1.5\, V/A = 1.5\, F\cos 30/A \qquad \text{(EQ. \#1 B)}$$
(rectangular section)

at extreme fiber, $\sigma = \sigma_{max}$ and $\tau = 0$.

In middle of section, $\sigma = 0$ and $\tau = \tau_{max}$.

$\therefore$ do not combine σ_{max} and τ_{max}, but calc. both to find largest equivalent stress.

bend $\sigma_{eq} = \sigma_{max}$

shear $\sigma_{eq} = \sqrt{3}(\tau_{max})$

Signature	Date of Signature	Date of Conception	Witnesses Signatures	Date of Signature	Date Understood
E. Slattery	7-19-85		1		
			2		

Form No. 314S (SJ 10/78)

FMC Corporation

ENGINEERING SHEET

Division: ODE
Project: 029-203-001
Page 10 of ___

Title: TRACK ASS'Y 4219265

Task #2, cont'd:

Find σ_{max} and τ_{max} in runner leg above A_9 (around 9/16 bolt):

eq. 1 A: $\sigma_{max} = My/I + F\sin 30/A$

$M = 13600 \times (\frac{1}{2} \times .28) = 1904$ lb in

$y = \frac{1}{2}(.3) = .15$

$I = \frac{1}{12} b h^3 = \frac{1}{12}(1.43)(.3)^3 = 3.217E-3$

$F = 13600$ lb $\qquad A = bh = 1.43 \times .3 = .429$

$\therefore \sigma_{max} = (1904)(.15)/3.217E-3 + (13600)(\sin 30)/.429$

$= 88,800. + 15,900. = \underline{105,000 \text{ psi}}$, comp.

eq. 1 B: $\tau_{max} = 1.5\, F \cos 30/A$

$= 1.5(13600)(\cos 30)/.429$

$= 41,200.$ psi, shear

$\therefore \sigma_{eq} = \sqrt{3}\,(41,200.) = \underline{71,300 \text{ psi}}$ eq.

$\therefore$ runner leg min FS in $A_9 = 170/105 = \boxed{1.62}$

$> 1.5 \therefore$ OK

Signature	Date of Signature	Date of Conception	Witnesses Signature	Date of Signature	Date Understood
D. Slattery	7-19-85		1.		
			2.		

Form No. 3145 (SJ 10/75)

FMC Corporation

ENGINEERING SHEET

Division: ODE
Project: 029-200-001
Page 11 of ___

Title: TRACK ASS'Y 4219265

Task #2, cont'd:

Find σ_{max} and τ_{max} in runner leg above A_{10} (around 5/8 bolt):

$$\sigma_{max} = My/I + F \sin 30/A$$

$M = 17800 \times (\frac{1}{2} \times .28) = 2492$ lb in

$y \cong \frac{1}{2}(.3) = .15$

$I = \frac{1}{12} b h^3 = \frac{1}{12}(1.78)(.3)^3 = 4.005\ E-3$

$F = 17800.$ lb $\qquad A = bh = 1.78 \times .3 = .534$ in^2

$\sigma_{max} = (2492)(.15)/4.005E-3 + (17800)(\sin 30)/.534$

$= 93,300 + 16,700. = \underline{110,000.\ psi}$ comp.

$\tau_{max} = 1.5\ F \cos 30/A$
$= 1.5(17800)(\cos 30)/.534$
$= \underline{43,300.\ psi}$, shear

$\therefore \sigma_{eq} = \sqrt{3}(43300) = \underline{75,000.\ psi}$, eq.

$\therefore$ runner leg min FS in $A_{10} = 170/110 = \boxed{1.55}$
$> 1.5 \therefore$ OK

Signature	Date of Signature	Date of Correction	Witnesses Signatures	Date of Signature	Date Understood
G. Slattery	7-19-85		1		
			2		

Form No. 3145 (SJ 10/75)

FMC Corporation

ENGINEERING SHEET

Division: ODE
Project: 029-200-001
Page 12 of ___

Title: TRACK ASS'Y 4219265

Task #3:

Find σ's + FS's in Al shoe boss and steel drive bushing 4215782 due to shrink fit only.

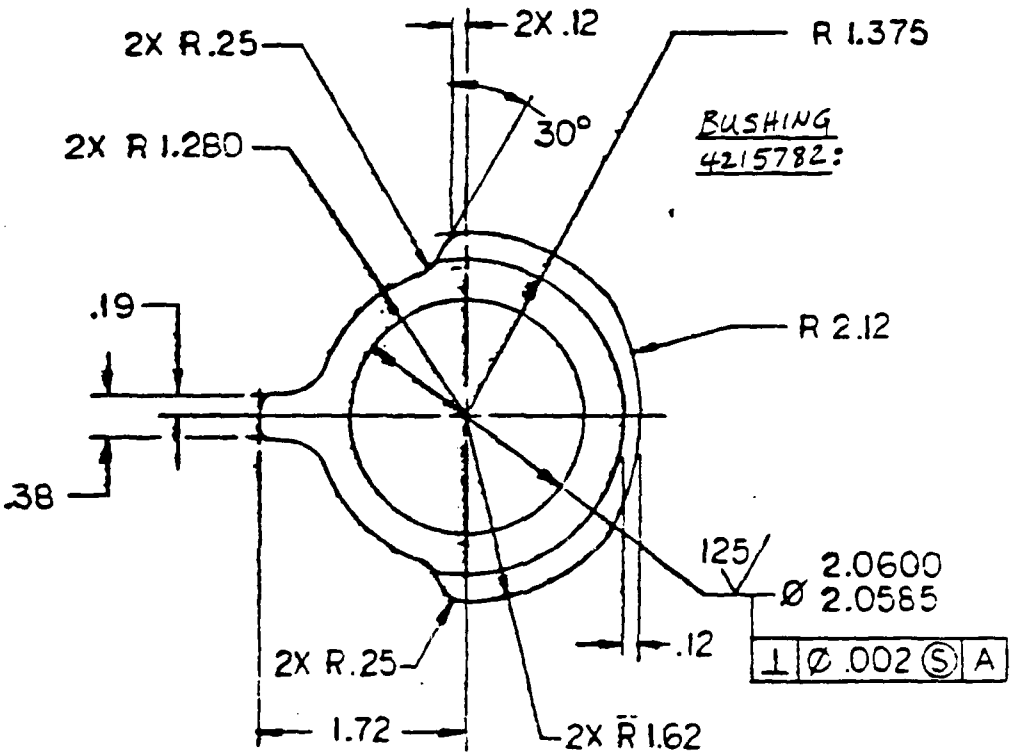

SHOE 4217772:

end boss dia

$= \begin{matrix} 2.064 \\ 2.063 \end{matrix}$

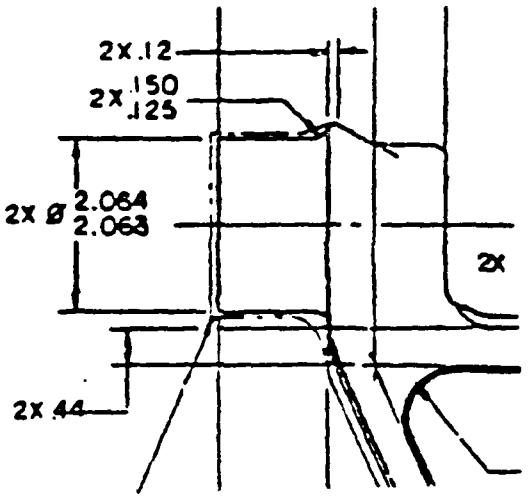

Signature	Date of Signature	Date of Completion	Witnesses Signatures	Date of Signature	Date Understood
D. Slattery	7-19-85		1.		
			2		

Form No. 314S (SJ 10/75)

Task 3, cont'd:

$\therefore$ max diametral interference $= 2.064 - 2.0585 = .0055''$
min " " $= 2.063 - 2.0600 = .0030''$

$\delta \equiv$ radial interference

$\therefore \delta_{max} = \frac{1}{2}(.0055) = .00275''$
$\delta_{min} = \frac{1}{2}(.003) = .0015''$

Calculate contact pressure:
From Shigley eq. 2-63: (w/ separate E's + μ's)

$$\frac{\delta}{p} = \frac{b}{E_o}\left(\frac{c^2+b^2}{c^2-b^2} + \mu_o\right) + \frac{b}{E_i}\left(\frac{b^2+a^2}{b^2-a^2} - \mu_i\right)$$

$\delta =$ radial interference $= \frac{1}{2}(.0055) = .00275$ (max)
$p =$ contact pressure, psi
$b =$ contact radius $\approx 2.06/2 = 1.03$
$c =$ outer radius of outer part $= ?$
per dwg 4215782, it is clear that the outer radius of the bushing is not uniform.
an estimated, weighted outside radius ≈ 1.35
$\therefore c \approx 1.35$

(dwg 4217772)
$a =$ inner radius of inner part $= \frac{1}{2}(1.328) = .664$
$\mu_o =$ Poisson's ratio of outer part $= \mu_{steel} = .29$ (Marks' p.5-5)
$\mu_i =$ " " " inner " $= \mu_{6061\text{-}T6} = .33$ (" p.6-11)

$E_o =$ E of outer part $= E_{steel} = 30.E6$ psi
$E_i =$ " " inner " $= E_{6061\text{-}T6} = 10.E6$ psi

Signature	Date of Signature	Date of Conception	Witnesses Signatures	Date of Signature	Date Understood
D. Slattery	7-19-85		1		
			2		

Task 3, cont'd:

$$\therefore \frac{\delta}{p} = \frac{1.03}{30E6}\left(\frac{1.35^2 + 1.03^2}{1.35^2 - 1.03^2} + .29\right) + \frac{1.03}{10.E6}\left(\frac{1.03^2 + .664^2}{1.03^2 - .664^2} - .33\right)$$

$$\therefore \frac{\delta}{p} = \frac{1.03}{30E6}\left(4.076\right) + \frac{1.03}{10.E6}\left(2.092\right)$$

$$= 1.399\,E-7 \quad + \quad 2.155\,E-7$$

$$\therefore \delta/p = 3.554\,E-7$$

$$\therefore p = \delta/(3.554E-7) = (.00275)/(3.554E-7) = \underline{7738.\ psi}$$
(max)

Now, with the contact pressure solved, use the general equations relating stresses to pressures in thick walled cylinders (Shigley eq's 2-53 & 2-54):

GENERAL

$$\sigma_t = \frac{p_i a^2 - p_o b^2 - a^2 b^2 (p_o - p_i)/r^2}{b^2 - a^2} \quad (2\text{-}53)$$

$$\sigma_r = \frac{p_i a^2 - p_o b^2 + a^2 b^2 (p_o - p_i)/r^2}{b^2 - a^2} \quad (2\text{-}54)$$

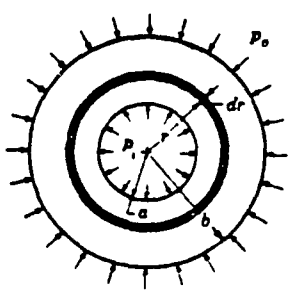

Both the inner and outer parts (boss and bushing) are modeled here as perfect cylinders. The boss attachment to the rest of the shoe is neglected, and the bushing non-uniformities are neglected, except that the bushing outer radius used here is an estimated weighted average of the radii of the bushing.

Signature	Date of Signature	Date of Consideration	Witnesses Signature	Date of Signature	Date Understood
D. Slattery	7-19-85		1		
			2		

Task 3 cont'd:

The distribution of σ's will look like Fig 2-29 from Shigley:

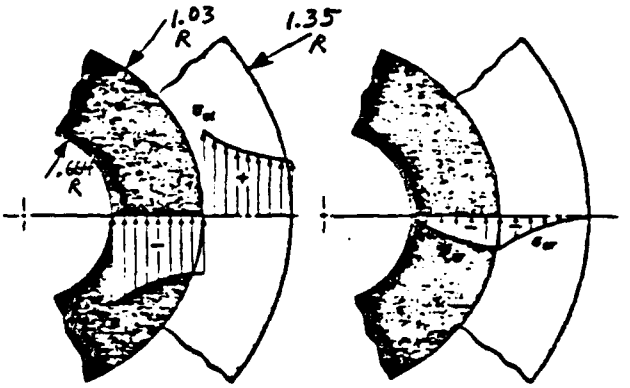

(a) Tangential stress, σ_t (b) Radial stress, σ_r

FIGURE 2-29
Distribution of radial and tangential stresses in shrink-fitted members

Outer part, steel bushing: $a = 1.03$ $b = 1.35$
$a^2 = 1.061$ $b^2 = 1.823$

$p_i = 7738.$ psi $p_o = 0$

$\sigma_{max} = \sigma_{t_a}$ (at inner edge) $\therefore r = a = 1.03$

$$\sigma_{t_a} = \frac{p_i a^2 - \cancel{a^2} b^2(-p_i)/\cancel{a^2}}{b^2 - a^2} = p_i \frac{a^2 + b^2}{b^2 - a^2}$$

$$\therefore \quad \sigma_{t_a} = (7738) \times \frac{1.061 + 1.823}{1.823 - 1.061} = \underline{29{,}300.\ \text{psi}}$$
(tension)

and $\sigma_{r_a} = -p = -7738.$ psi (comp.)

$$\therefore \sigma_{eq} = \sqrt{(29300)^2 - (29300)(-7738) + (-7738)^2} = \underline{33{,}800.\ \text{psi}}$$

$\therefore$ bushing FS $= 170/33.8 = \underline{5.0}$

Signature	Date of Signature	Date of Correction	Witnesses Signature	Date of Signature	Date Understood
E. Slattery	7-19-85		1		
			2		

Task 3, cont'd:

Inner part, al boss: $a = .664$ $b = 1.03$

$a^2 = .4409$ $b^2 = 1.061$

$p_i = 0$ $p_o = 7738.$ psi let $r = a = .664$

$$\therefore \sigma_{t_a} = \frac{-p_o b^2 - a^2 b^2 (p_o)/a^2}{b^2 - a^2} = \frac{-p_o (2b^2)}{b^2 - a^2}$$

$$\therefore \sigma_{t_a} = \frac{-(7738)(2 \times 1.061)}{1.061 - .4409} = \underline{-26{,}500.\ \text{psi}}$$

and $\sigma_{r_a} = 0$ $\therefore$ $\sigma_{eq} = \sigma_{t_a} = \underline{26{,}500\ \text{psi}}$ (comp.)

This is a compressive (but not bearing) stress as defined on p. 3.

$\therefore$ $FS = 35/26.5 = \underline{1.32}$

Signature	Date of Signature	Date of Conception	Witnesses Signature	Date of Signature	Date Understood
D. Slattery	7-19-85		1.		
			2.		

FMC Corporation

ENGINEERING SHEET

Division: ODE
Project: 029-200-001
Page 17 of ___

Title: TRACK ASS'Y 4219265

Task #4:

Find σ's + FS's of al boss under the drive bushing due to shrink fit and driving load "case 7".

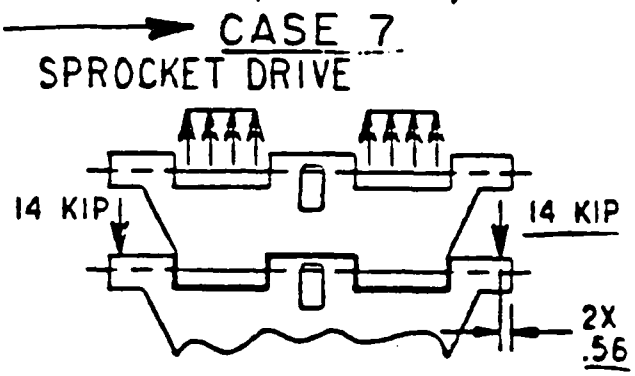

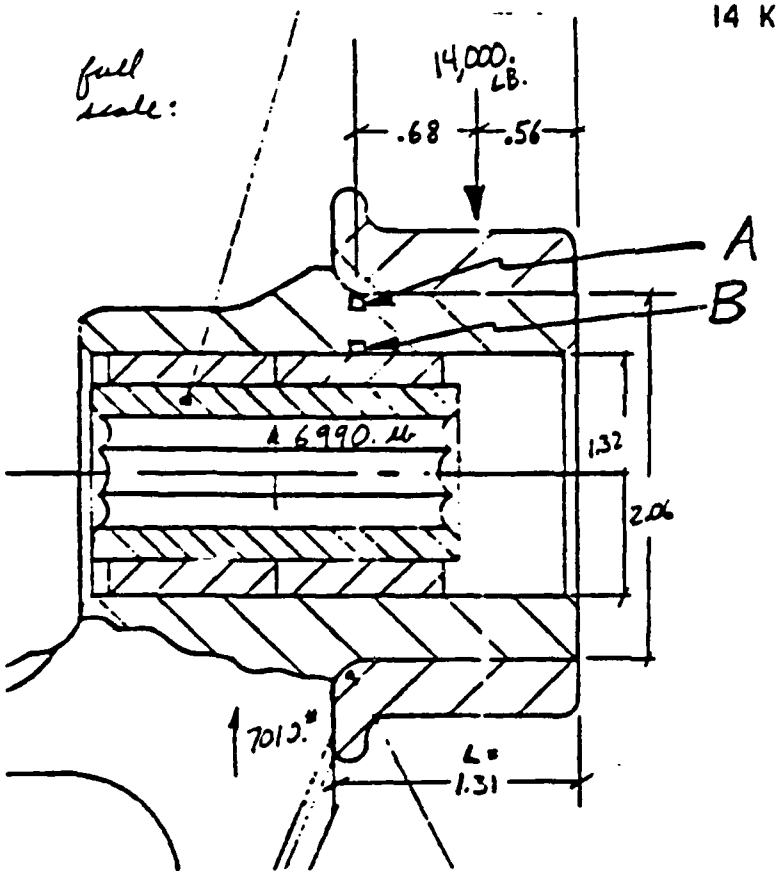

stresses on point A or B:

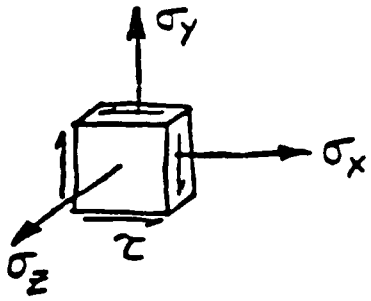

σ_x = axial stress = bending σ due to 14kip at .68"
σ_y = radial σ, due to shrink and 14k bearing load
σ_z = tangential σ, due to shrink fit
τ = shear stress, due to 14 kip load

for σ's, + = tension, − = compression.
for τ, + = sense as drawn

Signature	Date of Signature	Date of Conception	Witnesses Signatures	Date of Signature	Date Understood
G. Slattery	7-22-85		1		
			2		

Form No. 3145 (SJ 10/75)

Task #4, cont'd:

Stress at point A:

1. Calc. σ_x, σ_y, σ_z + τ.
2. Find $\sigma_{eq.}$ w/ FMC Des. man. 3-D σ_{eq} formula.
3. Compare σ_{eq} to YS for FS.

σ_x = bend σ = My/I

$M = 14000 \times .68 = 9520.$

$y = \frac{1}{2}(2.06) = 1.03$

$I = \frac{\pi}{64}(2.06^4 - 1.32^4) = .7349$

$\therefore \quad \sigma_x = (9520)(1.03)/.7349 = \underline{+13,300.\ psi}$ (tens.)

σ_y = σ_y due to shrink + σ_y due to brg = $\sigma_{y_S} + \sigma_{y_B}$

σ_{y_S} = radial σ at pt. A due to shrink fit
= −(contact pressure of fit)
= −7738. psi (p.14) (comp.)

σ_{y_B}: The driving load (14 kip) on the bushing must cause some increase in the pressure of the bushing on the shoe boss (directly under the applied load) beyond the pressure due to shrink fit only.

At one extreme, if the bushing is assumed rigid, the excess pressure will be 7 kip on the side facing the load and a reduction of 7 kip on the side away from the load. (This assumes no gapping on the side away from the load. Check this assumption next.)

Signature	Date of Signature	Date of Correction	Witnesses Signatures	Date of Signature	Date Understood
B. Sledbery	7-22-85		1.		
			2.		

Title: TRACK ASS'Y 4219265

Task #4, cont'd: 5 at A, cont'd

If bushing were rigid, would it "gap" on side away from load?

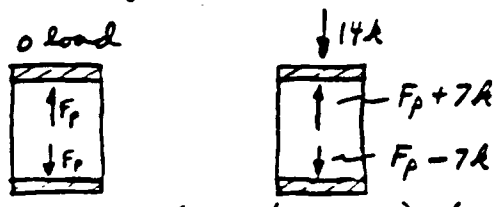

F_p = force due to contact pressure alone.

$F_p - F_p = 0$ ✓ $\quad (F_p + 7k) - (F_p - 7k) = 14k$ ✓

Check that $F_p > 7$ kip:

$$F_p = \rho \times D \times L \text{ (Shigley, etc.)}$$
$$= (7738)(2.06)(1.34) = 20{,}880 > 7{,}000 \therefore \underline{\text{No gap.}}$$

∴ If the bushing were rigid, the reaction due <u>only</u> to the driving load would be +7k on the driving side and −7k on the opp. side.

At the other extreme, if the bushing is assumed perfectly flexible (in bending) then the driving load would be reacted by all 14 kip added to the pressure load immediately under the driving load:

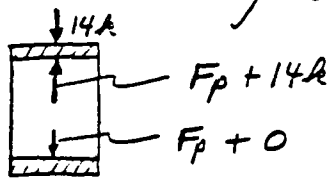

Exact determination of the excess bearing load for these actual finite stiffnesses would be quite involved. It is also not yet clear which of the above assumptions is more conservative.

∴ Use the average excess load: $(7k + 14k)/2 = 10{,}500$. lb

Signature	Date of Signature	Date of Correction	Witnesses Signature	Date of Signature	Date Understood
D. Slattery	7-22-85		1		
			2		

FMC Corporation

ENGINEERING SHEET

Division: ODE
Project: 029-200-001
Page 20 of ___

Title: TRACK ASS'Y 4219265

Task #4, cont'd: σ at A, cont'd

$$\therefore \sigma_{yB} = \frac{10500\ lb}{D \times L} = \frac{10500}{2.06 \times 1.31} = (-)3891.\ psi \text{ (comp.)}$$

$$\therefore \sigma_y = (-7738) + (-3891) = \underline{-11{,}630.\ psi} \text{ (comp)}$$

σ_z = tangential σ, due to shrink fit

at point A: $\sigma_z = \sigma_t (r = 1.03)$ (outer surf. of ol)

Use: σ_t eq. p. 14, w/ $p_i = 0$ $p_o = 7738.$

$a = \frac{1}{2}(1.32) = .66$ $\quad b = \frac{1}{2}(2.06) = 1.03$

$\therefore a^2 = .4356$ $\quad b^2 = 1.061$

$r = b = 1.03$

$$\therefore \sigma_t = \frac{-p_o b^2 - a^2 \cancel{b^2}(p_o)/\cancel{b^2}}{b^2 - a^2} = \frac{-p_o(b^2 + a^2)}{b^2 - a^2}$$

$$= \frac{-(7738)(1.061 + .4356)}{1.061 - .4356} = -18{,}520.\ psi$$

$$\therefore \sigma_z = \underline{-18{,}520.\ psi} \text{ (comp.)}$$

Signature	Date of Signature	Date of Cancellation	Witnesses Signatures	Date of Signature	Date Understood
G. Slattery	7-22-85		1		
			2		

Form No. 3145 (SJ 10/75)

Task #4, cont'd:

stress at A, cont'd:

τ = shear stress, due to 14 kip load

The shear stress on the annular cross-section will have some non-uniform distribution. The min value will be ~0 at point A. Point A would have $\tau = 0$ if it were a completely free surface. However, the presence of friction at that surface may produce some axial τ. The avg $\tau = V/A$. The peak τ probably $\approx 1.5\, V/A$ (4/3 for solid circle, 1.5 for rectangle, 2.0 for thin annulus x-section - marked p.5-18)

Since τ at A probably ≈ 0, it should be conservative to set $\tau = \tau_{avg} = 1.0\, V/A$

$$\therefore \text{ let } \tau = \frac{V}{A} = \frac{14000}{\frac{\pi}{4}(2.06^2 - 1.32^2)} = 7127.$$

$$\therefore \tau = \underline{+7127.\ psi} \text{ (shear)}$$

collect:

$\sigma_x = +13{,}300.$
$\sigma_y = -11{,}630.$
$\sigma_z = -18{,}520.$
$\tau = +7127.$

Signature	Date of Signature	Date of Conception	Witnesses Signatures	Date of Signature	Date Understood
D. Slattery	7-22-85		1.		
			2.		

Title: TRACK ASS'Y 4219265

Task #4, cont'd: σ at A, cont'd:

Use FMC Design Manual 3-D σ_{eq} formula:

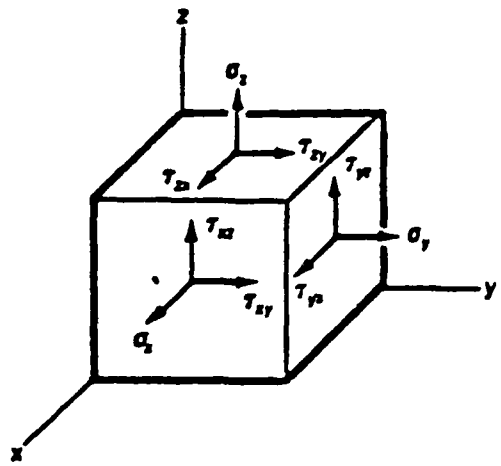

$$\sigma_{eq} = \frac{1}{\sqrt{2}}\sqrt{(\sigma_x - \sigma_y)^2 + (\sigma_y - \sigma_z)^2 + (\sigma_z - \sigma_x)^2 + 6(\tau_{yz}^2 + \tau_{zx}^2 + \tau_{xy}^2)}$$

Figure 10-2. Material Element Subjected to General Triaxial Normal and Shear Stresses

$$(\sigma_x - \sigma_y)^2 = (13{,}300 + 11630)^2 = 6.215\ E8$$

$$(\sigma_y - \sigma_z)^2 = (-11630 + 18520)^2 = 4.747\ E7$$

$$(\sigma_z - \sigma_x)^2 = (-18520 - 13{,}300)^2 = 1.013\ E9$$

$$6\tau^2 = 6(7127)^2 = 3.048\ E8$$

$$\Sigma = 1.987\ E9$$

$$\therefore\ \sigma_{eq_A} = \frac{1}{\sqrt{2}}\sqrt{1.987E9} = \underline{31{,}500.\ psi}$$

$YS = 35{,}000.\ psi$

$$\therefore\ FS_A = 35/31.5 = \underline{1.11}$$

Signature	Date of Signature	Date of Completion	Witnesses Signature	Date of Signature	Date Understood
D. Slattery	7-22-85		1		
			2		

Task # 4, cont'd: Now, stress at point B (p.17):

σ_x = bend σ = My/I

$M = 9520$
$y = (1/2)(1.32) = .66$

$I = .7349$

$\therefore \sigma_x = (9520)(.66)/.7349 = \underline{+8550.}$ psi (tens.)

$\sigma_y = \sigma_{ys} + \sigma_{yB}$

σ_{ys} = $\sigma_r(B)$ due to shrink fit = 0 (per sketch p.15)
σ_{yB} = $\sigma_r(B)$ due to 14k leg load = ?

total load on shoe = 2x14k = 28000.
total load is reacted out at 3 places:
center boss + 2 end bosses
center boss int. & bushing length ≅ 3.65" (4219267)
end " " " " ≅ 1.82" "
$\therefore$ total length = 3.65 + 2x1.82 = 7.29
$\therefore$ assume end boss internal
load = $\frac{1.82}{7.29}(28000) = \underline{6990.}$ lb.

$\therefore$ bearing $\sigma = \frac{6990}{(1.32)(1.82)} = (-)2910.$ psi (comp.)

$\therefore \sigma_y \cong 0 - 2910. = \underline{-2910.}$ psi (comp.)

Signature	Date of Signature	Date of Conception	Witnesses Signatures	Date of Signature	Date Understood
G. Slattery	7-22-85		1		
			2		

Task # 4, cont'd: σ at B, cont'd:

σ_z = tangential σ at B = $\sigma_x(B)$ due to shrink fit

$= \underline{(-)26{,}500.\ psi}$ (comp.) (p. 16)

$\tau \simeq \underline{7127.\ psi}$ (shear) (same as p. 21)

$\therefore$ $\sigma_x = +8550.$ (Use σ_{eq} from p. 22)

$\sigma_y = -2910.$

$\sigma_z = -26{,}500.$

$\tau = 7127.$

$(\sigma_x - \sigma_y)^2 = (8550 + 2910)^2 = 1.313\ E8$

$(\sigma_y - \sigma_z)^2 = (-2910 + 26500)^2 = 5.565\ E8$

$(\sigma_z - \sigma_x)^2 = (-26500 - 8550)^2 = \underline{1.229\ E\ 9}$

$\Sigma = 1.916\ E\ 9$

$\therefore\ \sigma_{eq_B} = \frac{1}{\sqrt{2}}\sqrt{1.916\ E9} = \underline{31{,}000.\ psi}$

$\therefore\ FS_B = 35{,}000 / 31{,}000 = \underline{1.15}$

Signature	Date of Signature	Date of Conception	Witnesses Signatures	Date of Signature	Date Understood
D. Slattery	7-22-85		1		
			2		

FMC Corporation

ENGINEERING SHEET

Division: ODE
Project: 029-203-001
Page 25 of ___

Title: TRACK ASS'Y 4219265

ass'y Torques:

What lube + torques are necessary to get bolt preloads of 18250 and 23000 lb?

as discussed on p. 4, use the methods of Falyone. The Falyone nomogram and data are included on the next 2 pages.

Method: enter nomogram w/ washer friction (f_w), thread friction (f_t), bolt dia (d) and preload (F) to get installation torque (T) as output.

assume parts are oiled (w/ SAE 20 to 30 oil, per Falyone data). assembling w/ oil will produce better preload control. Shigley (3rd ed., p. 247) shows smaller standard deviation of preload (9% vs 15% of mean) in lubed tests vs. dry tests. (To prevent either gapping or yielding of the guide/shoe joint, controlling the amount of preload is critical.)

To get F=18250 in 9/16 bolt:

f_w: cad nut to cad washer: .11
cad washer to steel guide: .10 ∴ f_w = .10

f_t: cad bolt to cad nut: ~.19 (.28 × .11/.16)
∴ f_t = .19

d = 9/16"
F = 18250 lb

∴ From nomogram, T ≈ 162. ft-lb

Signature	Date of Signature	Date of Correction	Witnesses Signatures	Date of Signature	Date Understood
D. Slattery	7-23-85		1		
			2		

Form No. 3148 (SJ 10/75)

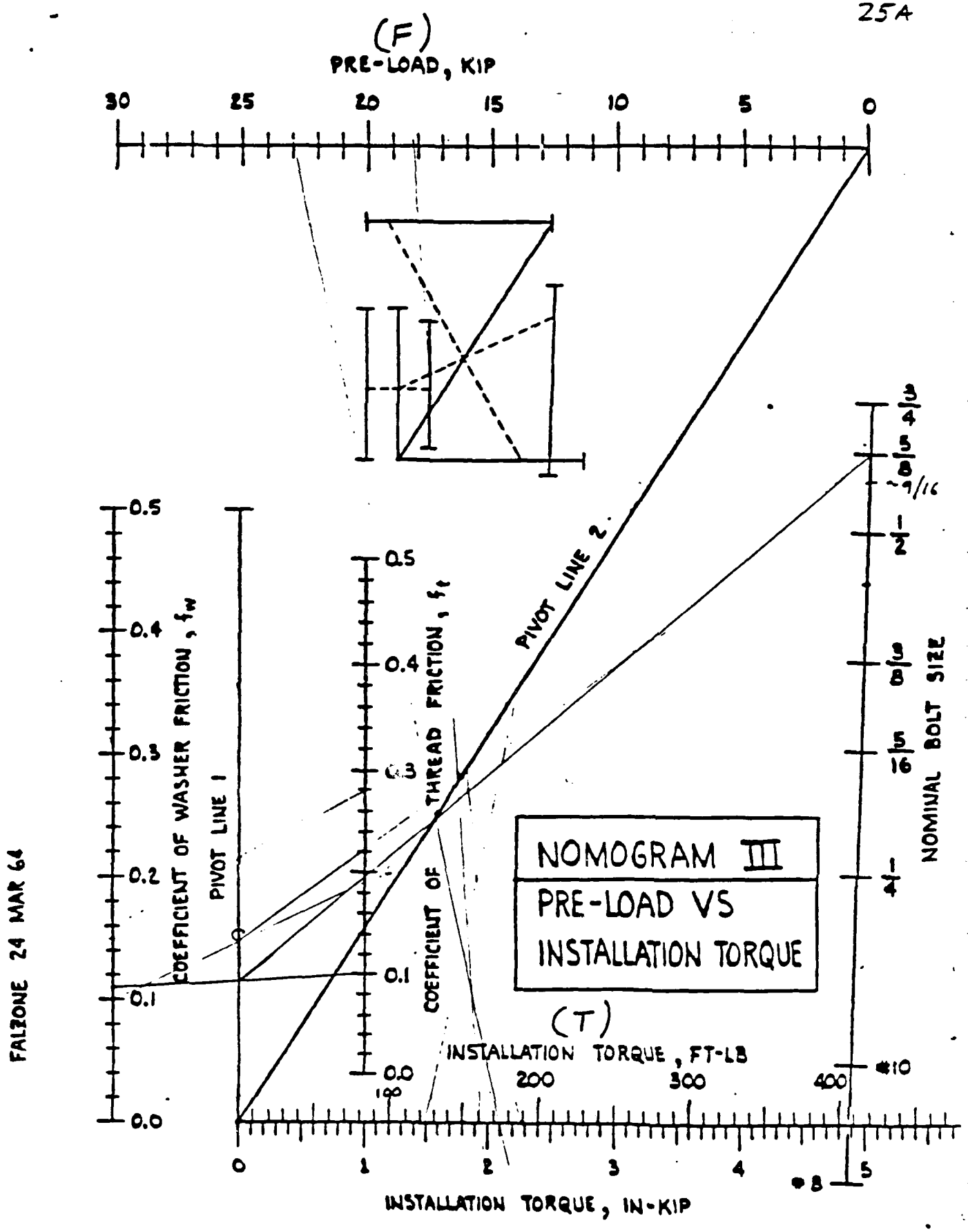

FALZONE 24 MAR 64

MATERIAL AND FINISH	COEFFICIENT OF FRICTION					
	THREAD, f_t			WASHER, f_w		
	Dry	Oil	Wax	Dry	Oil	Wax
Steel, Plain to Plain	.15	.11	.13	.15	.11	.13
Steel, Plain to Cadmium	.11	.10	.10	.11	.10	.10
Steel, Plain to Zinc Plate	.25		.17	.22		.16
Steel, Plain to Phosphate Coating	.11	.09	.10	.11	.09	.10
Steel, Cadmium Plate to Cadmium Plate	.28	.28 x .11/.16 = ~.19	.06	.16	.11	.05
Steel, Cadmium Plate to Zinc Plate	.24		.07	.23		.07
Steel, Cadmium Plate to Phosphate Coating	.20	.07	.07	.20	.07	.06
Steel, Zinc Plate to Phosphate Coating	.16	.07	.08	.16	.07	.08
Steel, Zinc Plate to Zinc Plate	.36		.09	.23		.08
Steel, Phosphate Coating to Phosphate Coating	.15	.10	.10	.15	.10	.10
Aluminum to Steel Alloy (T.C.)		.06			.06	
Aluminum to Cadmium Plate	.37	.16		.37	.16	
Magnesium to Cadmium Plate	.47	.19		.47	.19	
Corrosion Resistant to Corrosion Resistant (T.C.)		.09			.09	

Definitions:

Dry - as produced with residual oils
Oil - machine oil, SAE 20 to 30
Wax - Johnson's J-150
T.C. - Thread compound, MIL-T-5544

FMC Corporation

ENGINEERING SHEET

Division: ODE
Project: 029-200-001
Page 26 of ___

Title: TRACK ASS'Y 4219265

ass'y Torques, cont'd

To get $\underline{F = 23000}$ in $\underline{5/8 \text{ bolt}}$:

f_w : cad head to cad washer : .11
cad washer to al shoe : .16 $\therefore f_w = .11$

f_t : cad bolt to steel guide: .10 $\therefore f_t = .10$

$d = 5/8''$ $\therefore$ from nomogram:

$\therefore$ $\underline{T \approx 174. \text{ ft-lb}}$

<u>Now, consider shrink fit</u> of bushing 4215782 on shoe 4217772. Per W. Bilkiewicz, it is desired to heat the bushing to 600°F prior to ass'y. <u>Questions</u>:

① will 600F provide ass'y clearance?
② will contact w/ 600F bushing weaken the al?

re Q.①: Diametral interference = .0030 – .0055" (p. 13)
$\therefore$ bushing must grow at least .0055" on ID.
ID = 2.059 $\Delta L = \alpha \Delta T L$:

$\alpha = 8.3 \text{ E-6} / °F$ (mat'ls selector, '80, alloy steel)
$\Delta T \approx 600 - 70 = 530°F$
$L = 2.059''$

$\therefore \Delta L = \left(\frac{8.3E-6}{°F}\right)(530 \cancel{°F})(2.059'') = .009''$ $\therefore$ OK

Signature	Date of Signature	Date of Consultation	Witnesses Signature	Date of Signature	Date Understood
D. Slattery	7-23-85		1		
			2		

Form No. 3146 (SJ 10/75)

FMC Corporation

ENGINEERING SHEET

Division: ODE
Project: 029-200-001
Page 27 of ___

Title: TRACK ASS'Y 4219265

600 F ass'y, cont'd:
Q. #②: will exposure to 600°F weaken the al?

Without an elaborate transient heat transfer analysis, I can only estimate that the al in contact w/ the hot bushing will be exposed to ~600 F for ~ 1 minute.

Per Marks' Handbook, p. 6-81, the temp and time for 6061 solution and precipitation treating are, respectively:
975 - 995 °F for 10-60 min and
315 - 325 °F for 18 hours.

Van Vlack (Elements of mat'ls sci. + Eng'g, 3ed, p. 380) shows that al 2014 at 652°F (345°C) starts overaging (precipitates agglomerate) immediately and in 6 min (0.1 hr) can drop in YS from ~ 20 KSI to ~ 15 KSI.

MIL-HDBK-5D has several curves for effects of temp. exposure on 6061-T6. (next 3 pages.)

There are 2 kinds of weakening possible here:

1. Instantaneous weakening at the hi Temp.
2. Permanent weakening after heating. (overaging)

The curves suggest heating to 400°F might be safer. W/ 400°F heating:

$\Delta L = (8.3E^{-6})(330)(2.059) = .0056''(7.0055'')$

If this is not sufficient ass'y clearance, the al boss could be chilled to make up the difference.

Signature	Date of Signature	Date of Correction	Witnesses Signatures	Date of Signature	Date Understood
D. Slattery	7-23-85		1		
			2		

Form No. 3145 (S) (10/75)

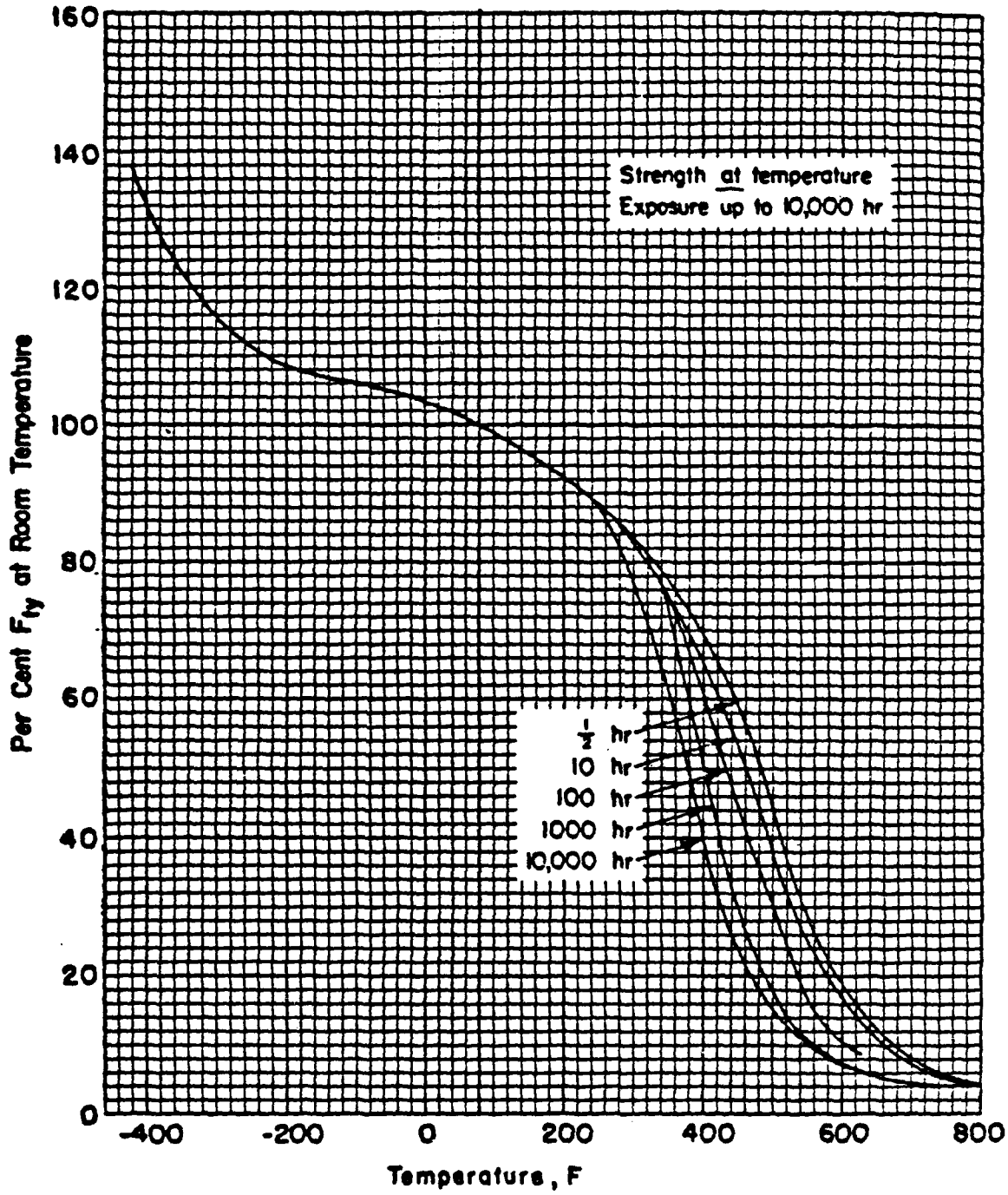

FIGURE 3.6.1.2.1(b). *Effect of temperature on the tensile yield strength (F_{ty}) of 6061-T6 aluminum alloy (all products).*

This is the strength at the elevated temp.

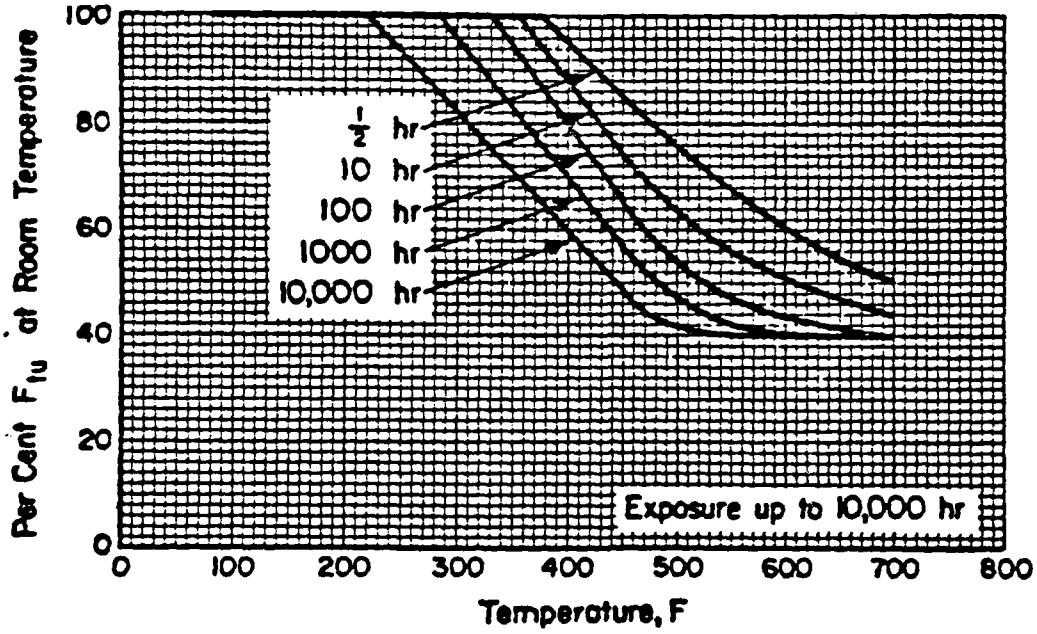

TS

FIGURE 3.6.1.2.1(c). *Effect of exposure at elevated temperatures on the room-temperature ultimate tensile strength (F_{tu}) of 6061-T6 aluminum alloy (all products).*

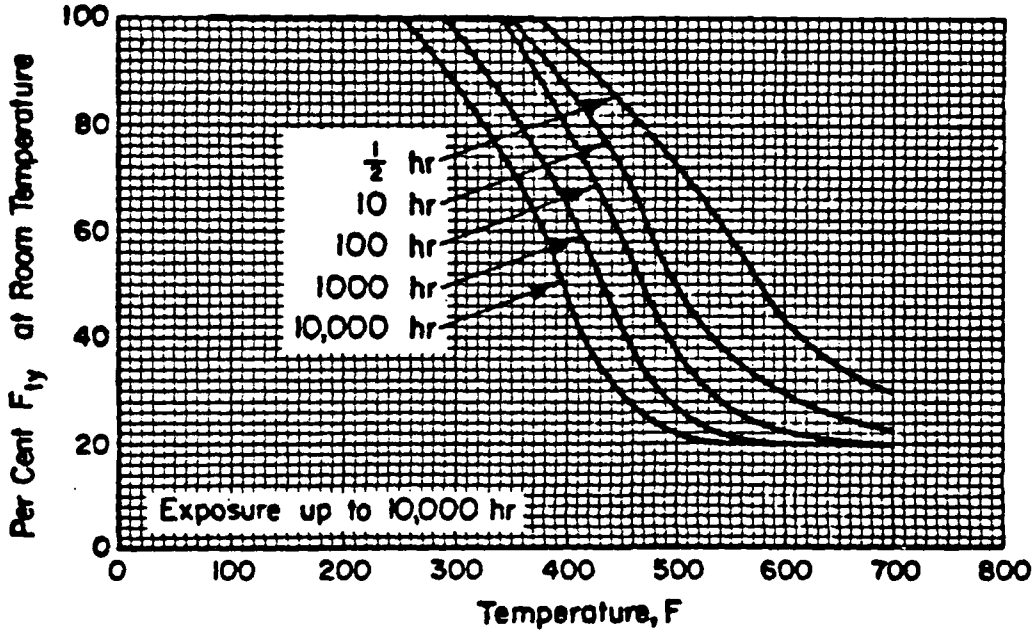

YS

FIGURE 3.6.1.2.1(d). *Effect of exposure at elevated temperatures on the room-temperature tensile yield strength (F_{ty}) of 6061-T6 aluminum alloy (all products).*

These are the strengths after bringing back to room temp.

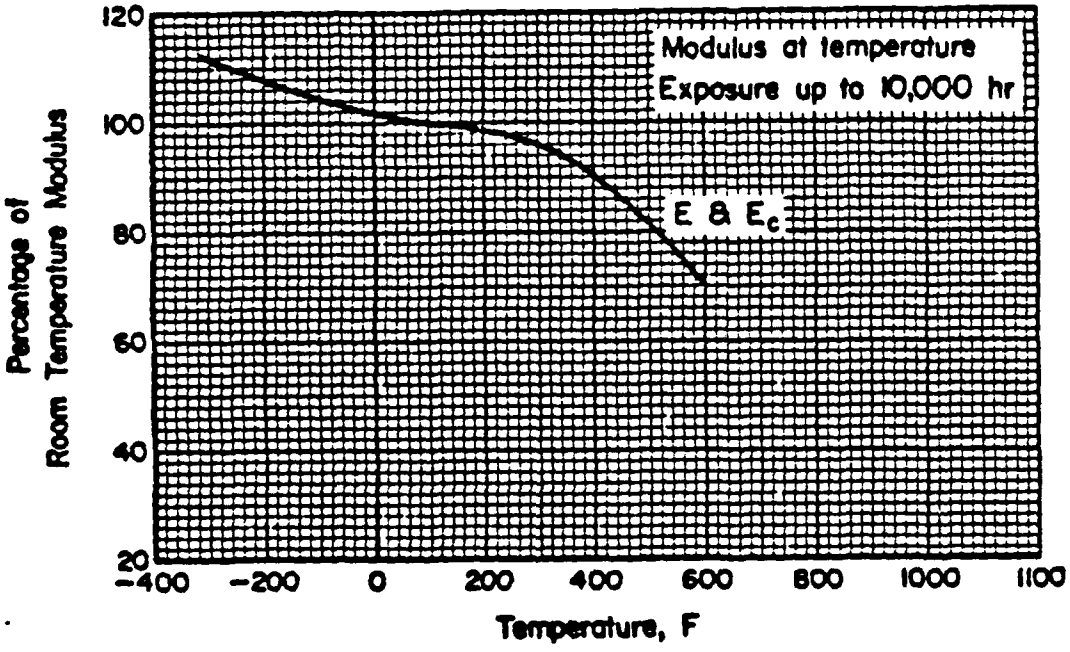

FIGURE 3.6.1.2.4. *Effect of temperature on the tensile and compressive moduli (E and E_c) of 6061 aluminum alloy.*

probably independent of exposure time, except the specimen tested must be at one uniform Temp.

FMC Corporation

ENGINEERING SHEET

Division: ODE
Project: 029-200-001
Page 28 of ___

Title: TRACK ASS'Y 4219265

600F ass'y, cont'd:

Summary of info. from MIL-HDBK-5D curves:
(I = instantaneous effect
P = permanent "
% = percent of normal room temp property.
600F, 400F = bushing T at ass'y.)

	600°F		400°F	
from:	I	P	I	P
p.27A	~30-100%		~75-100%	
" B		~60-100%		100%
" C*	70%		90%	

* Reduction of E will be beneficial to some degree. (keeps σ down)

Based on this limited information, I suggest that one of the following be done:

Either:
1. Assemble bushing at 400°F max + chill shoe if nec.

OR 2. Do further research to find data for temp. exposures down to 1. minute.

OR ~~3.~~ Do a very elaborate finite element analysis accounting for heat transfer, changing Temps, α, E & YS. (too costly!?)

OR 4. Build test assemblies to be sure bushing has sufficient tightness remaining, after cooling to its lowest operating temp.

There will probably be no yielding during ass'y, even at 600°F, because the reduction in E and the hi temp. expansion (of the steel) itself will keep σ's low. But, ass'y at 600°F will probably result in some permanent reduc. in YS of al under the bushing (60-100% YS_{RT}).

Signature	Date of Signature	Date of Conception	Witnesses Signatures	Date of Signature	Date Understood
D. Slattery	7-23-85		1		
			2		

Form No. 3145 (SJ 10/75)

Title: TRACK ASS'Y 4219265

Calc. min Torque to rotate bushing on boss:

Now, assume the min. interference (.003" on dia ∴ δ = radial interf = .003/2 = .0015) and calculate the torque req'd to rotate the bushing on the boss.

$T = F \times r \qquad F = F_f = \mu F_N \qquad r = 2.06/2 = 1.03$

F_N = normal force = $p \times A$

p = min contact pressure

A = area of contact = $\pi \times 2.06 \times 1.31 = 8.478$ in.^{2}

μ = coeff. of fric, steel/al, dry, static = .61 (marks')
(no Falgone # for steel on al, dry)

now, find min contact pressure, p:

use same calc as p. 14 except w/ $\delta = .0015$

∴ $p = .0015 / (3.554E-7) = 4221.$ psi

∴ $pA = 4221 \times 8.478 = 35{,}780.$ lb $= F_N$

∴ $F_f = \mu F_N = (.61)(35780) = 21{,}830.$ lb

∴ $T = (21830)(1.03) = \underline{22{,}000.}$ lb in

= min. torque that might be able to rotate bushing on boss.

Signature	Date of Signature	Date of Conception	Witnesses Signature	Date of Signature	Date Understood
G. Slattery	7-23-85		1.		
			2.		

Title: TRACK LINK 4219267

New Questions: It is desired (per B. Bilkiewicz, 7-15-85) to cure the rubber on the shoe after assembling the bushing onto the shoe. This would require exposing the shrunk-on bushing ass'y to 350° F for ~20 min. Given the different rates of thermal exp., the al would grow faster + ∴ its comp. σ would increase. (Shoe boss will already be drilled.)

Q. 1: Would the al yield?

Q. 2: If it yielded, would the resulting decrease in tightness result in a final interface pressure that is less than that resulting from a min interference in the 1st place?

Use the σ_x formula from p. 14:

al (inside member) inner surface σ_x: $(p_i = 0)$

$$\sigma_x = \frac{-p_o b^2 - a^2 b^2 (p_o)/r^2}{b^2 - a^2}$$

let $p_o = p$ and $r = a$ (for inner surf.):

$$\therefore \sigma_x = \frac{-p b^2 - \cancel{a^2} b^2 p/\cancel{a^2}}{b^2 - a^2}$$

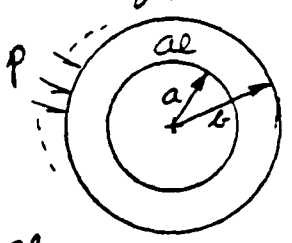

$$\therefore \sigma_x = \frac{-p(2b^2)}{b^2 - a^2}$$

w/: a = nominal al inside radius
b = " " outside "

Signature	Date of Signature	Date of Conception	Witnesses Signatures	Date of Signature	Date Understood
D. Slattery	7-15-85		1.		
			2.		

FMC Corporation

ENGINEERING SHEET

Division: ODE
Project: 029-200-001
Page 31 of ___

Title: TRACK LINK 4219267

Nominal dim's are suff. for this eq:

$\therefore$ use $a = .664''$ (p. 16)
$b = 1.03''$ "

$$\therefore \quad \sigma_x = \frac{-p\left(2(1.03)^2\right)}{1.03^2 - .664^2} = (-)3.422\,p$$

or, $\boxed{\sigma_x = p(3.422)}$ ✓ (compression) both in psi

and from p.14:

$\boxed{\delta = p(3.554E-7)}$ for this data (δ in inch, p in psi)

(E's at 350°F $\simeq$ 95% of E's at room temp $\therefore$ this eq. still OK.)

δ = Radial interference

$$\therefore \quad \delta_{max} = \tfrac{1}{2}(.0055) = .00275 \quad (p.\ 13)$$
$$\delta_{min} = \tfrac{1}{2}(.003) = .0015'' \quad "$$

Excess δ due to temp rise:
calc. unloaded change in size of al & steel rings due to ΔT only:

$\Delta L = \alpha \Delta T L$ (w/ L = radius = 1.03)

$\Delta L_{steel} = (8.3E-6)(350-70)(1.03) = 2.394\,E-3''$

$\Delta L_{al} = (13.1E-6)(350-70)(1.03) = 3.778\,E-3''$

Signature	Date of Signature	Date of Correction	Witnesses Signature	Date of Signature	Date Understood
G. Slattery	7-15-85		1.		
			2.		

Form No. 3148 (SJ 10/75)

FMC Corporation

ENGINEERING SHEET

Division: ODE
Project: 029-200-001
Page 32 of ___

Title: TRACK LINK 4219267

Excess $\delta = \Delta L_{oe} - \Delta L_{sel}$

$= (3.778\,E-3) - (2.394\,E-3) = 1.384\,E-3$

total δ = original δ + δ due to Temp

$\therefore\ \delta_{max} = .00275 + .001384 = .004134''$

$\delta_{min} = .0015 + .001384 = .002884''$
(at 350 F, unloaded)

$p = \delta / (3.554E-7)$

$\therefore\ p_{max} = (.004134)/(3.554E-7) = 11{,}630.$ psi

$p_{min} = (.002884)/$ " $= 8115.$ psi

$\therefore\ \sigma_{t\,max} = (3.422)(11630) = \underline{39{,}800.\ psi}$

$\sigma_{t\,min} = (\ \text{"}\ )(8115) = \underline{27{,}800.\ psi}$

Per p. 3 & 27A:

YS of 6061-T6 <u>at</u> 350°F = (.78) x 35 ksi
= 27,300. psi

<u>Alum. Stds & Data, 1976</u> shows:
at 350°F : TS = 26.5 ksi, YS = 23. ksi
elong. = 24%

$\therefore$ To be conservative, let YS(350F) = <u>23. ksi</u>

$\therefore$ <u>Yielding is predicted for the whole tolerance range.</u>

Signature	Date of Signature	Date of Conception	Witnesses Signatures	Date of Signature	Date Understood
D. Slattery			1		
			2		

Form No. 3145 (SJ 10/76)

FMC Corporation

ENGINEERING SHEET

Division: ODE
Project: 029-200-001
Page 33 of ___

Title: TRACK LINK 4219267

Check stress/strain curve at 350 F:
Use the prop's from Alum. Stds & Data '76, from previous page, to draw σ/ε curve to scale:

Scale σ/ε curve: (6061-T6, at 350°F)

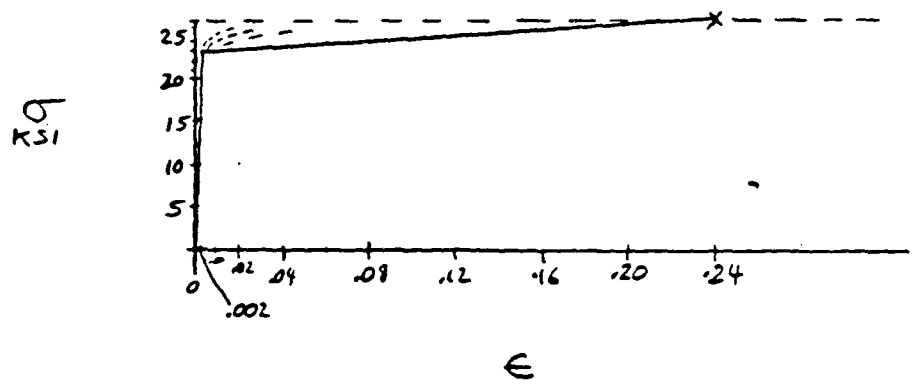

ε at YP: $\sigma = E\epsilon \therefore \epsilon = \sigma/E = 23000/10M = 2.3E-3$

ε at frac $= \epsilon_{elas} + \epsilon_{plas} = 2.3E-3 + \epsilon_{plas}$

$\epsilon_{plas} = elong = .24$

$\therefore$ ε at frac $\simeq \epsilon_{plas} = .24$

Check max possible strain:

It was shown on p. 32 that the max δ (due to original δ and Temp rise) ≃ .004"
Even if the steel were rigid, the max amount of change of radius of the Al ring would be .004" or $\epsilon \cong .004"/1.03" \simeq .004$
$\therefore$ even if Al ring is forced to conform to the steel 100%, the Al ε is barely starting into the plastic range.

Signature	Date of Signature	Date of Conception	Witnesses Signature	Date of Signature	Date Understood
D. Slattery	7-15-85		1.		
			2.		

Form No. 3145 (SJ 10/75)

FMC Corporation

ENGINEERING SHEET

Division: ODE
Project: 029-200-001
Page 54 of ___

Title: TRACK LINK 4219267

The above calc's + considerations allow these conclusions re 350°F curing operation:

① The al ring will not fracture in compression. The ductility at 350°F is good and, assuming the plastic strain is reasonably uniformly dist'd around the inner surf., the strain will be very low.

② The al ring will yield, for the whole range of proposed interference. The yielding may be localized near the inner surf. only. Inner surf. σ's > YS are calc'd on p. 320. (From MIL-HDBK-5D curve, there will be no permanent reduction in YS due to 350F for 20 min)

③ Since some yielding will occur, some loss of tightness will occur. The amount cannot be quickly calc'd. If only the inner surf. yields, then the inner surf. will develop a residual tensile stress as the external pressure is relieved, changing the free position of the al and ∴ changing its effective δ. The radial distribution of residual stress and its effect on contact pressure cannot be quickly calc'd. (Given δ = .0015 to .00275, I cannot quickly predict the σ distribution. Even given the σ dist, I could not quickly predict the free size, ∴ final fit ∴ final pressure.)

④ ∴ Determining effect on fit would be a fairly difficult study, probably requiring elastic-plastic finite el. anal.

Signature	Date of Signature	Date of Completion	Witnesses Signatures	Date of Signature	Date Understood
D. Slattery	7-16-85		1.		
			2.		

Form No. 3145 (SJ 10/78)