AGARD-AG-273

AD-A202 493

AGARD

ADVISORY GROUP FOR AEROSPACE RESEARCH & DEVELOPMENT

7 RUE ANCELLE SURESNES FRANCE

AGARDograph No.273

Guidance and Control Systems Simulation and Validation Techniques

DTIC
ELECTE
OCT 24 1988
S D
H

NORTH ATLA

DISTRIBUTION AND AVAILABILITY
ON BACK COVER

DISTRIBUTION STATEMENT A
Approved for public release;
Distribution Unlimited

88 10 21 07

(1)

AGARD-AG-273

NORTH ATLANTIC TREATY ORGANIZATION

ADVISORY GROUP FOR AEROSPACE RESEARCH AND DEVELOPMENT

(ORGANISATION DU TRAITE DE L'ATLANTIQUE NORD)

AGARDograph No.273

GUIDANCE AND CONTROL SYSTEMS SIMULATION AND VALIDATION TECHNIQUES

Edited by

Dr William P.Albritton, Jr
AMTEC Corporation
213 Ridgelawn Drive
Athens, Alabama 35611
United States

DTIC
ELECTE
OCT 2 4 1988
S D
H

DISTRIBUTION STATEMENT A
Approved for public release;
Distribution Unlimited

This AGARDograph has been prepared at the request of the Guidance and Control Panel of AGARD.

THE MISSION OF AGARD

According to its Charter, the mission of AGARD is to bring together the leading personalities of the NATO nations in the fields of science and technology relating to aerospace for the following purposes:

— Recommending effective ways for the member nations to use their research and development capabilities for the common benefit of the NATO community;

— Providing scientific and technical advice and assistance to the Military Committee in the field of aerospace research and development (with particular regard to its military application);

— Continuously stimulating advances in the aerospace sciences relevant to strengthening the common defence posture;

— Improving the co-operation among member nations in aerospace research and development;

— Exchange of scientific and technical information;

— Providing assistance to member nations for the purpose of increasing their scientific and technical potential;

— Rendering scientific and technical assistance, as requested, to other NATO bodies and to member nations in connection with research and development problems in the aerospace field.

The highest authority within AGARD is the National Delegates Board consisting of officially appointed senior representatives from each member nation. The mission of AGARD is carried out through the Panels which are composed of experts appointed by the National Delegates, the Consultant and Exchange Programme and the Aerospace Applications Studies Programme. The results of AGARD work are reported to the member nations and the NATO Authorities through the AGARD series of publications of which this is one.

Participation in AGARD activities is by invitation only and is normally limited to citizens of the NATO nations.

The content of this publication has been reproduced
directly from material supplied by AGARD or the authors.

Published July 1988

Copyright © AGARD 1988
All Rights Reserved

ISBN 92-835-0472-0

Printed by Specialised Printing Services Limited
40 Chigwell Lane, Loughton, Essex IG10 3TZ

PREFACE

Simulations have been used in guidance and control system development for a long time and in varying degrees of complexity. Only minimal complexity is required in continuous, linear analytical representations of control components. On the other hand, much complexity would be necessary to represent, for example, a radar-guided missile including nonlinearities in subsystems such as airframe aerodynamics, inertial instrumentation, and processing electronics.

A variety of simulation tools and techniques has evolved to deal effectively with the various complexity levels. Computer technology largely determined what was feasible and achievable and, consequently, what was accomplished. Continuous system modelling programs for digital computers significantly aided the subsystem design process. Analog computers with complex function generation capabilities were quite adept at treating problems associated with system nonlinearities. Such systems could also function in real time, making hardware-in-the-loop operation possible. Modern digital computers have evolved rapidly in speed and memory capacity so that the operation of quite complex simulations, perhaps in real time, is routinely performed. Desk-top machines are now being employed in some applications and their use will certainly increase.

This AGARDograph provides information on simulation applications in the tactical weapons area over the recent past. It is not, nor is it intended to be, an exhaustive treatment of the subject. Rather, its purpose is to show the evolutionary trends in tools and techniques in this application area. Digital and hardware-in-the-loop techniques are treated and examples are provided of simulation and validation efforts involving operational systems.

* * *

Les simulations sont employées depuis longtemps pour le développement des systèmes de guidage et de pilotage, et à différents niveaux de complexité. Les représentations continues, linéaires, analytiques des composants de pilotage n'exigent qu'un niveau minimal de complexité; par contre, la représentation d'un engin guidé par radar, qui tient compte des non-linéarités au niveau des sous-systémes telles que l'aérodynamique de la cellule, l'instrumentation inertielle et les unités de traitement électroniques est d'une complexité beaucoup plus grande.

Diverses techniques et aides à la simulation ont été mises au point efficacement pour permettre la simulation à différents niveaux de complexité. Les limites du faisable et du réalisable dans ce domaine, et par conséquent, le résultat final, ont été dictées en grande partie par la technologie des ordinateurs. Les programmes de modélisation des systèmes en continu, développés pour les calculateurs digitaux, sont d'une aide considérable pour l'étude des sous-systèmes.

Les calculateurs analogiques, capables de générer des fonctions complexes s'avèrent bien adaptés à la résolution des problèmes associés aux non-linéarités des systèmes, en plus, de tels systèmes peuvent fonctionner en temps réel, ce qui permet d'introduire le matériel dans la boucle opératoire.

La capacité mémoire et la vitesse de calcul des derniers calculateurs digitaux sont telles que la réalisation de simulations relativement complexes, parfois en temps réel, est devenue une opération de routine. Les petits ordinateurs de bureau sont déjà utilisés pour certaines applications, et la tendance va certainement s'accentuer.

La présente AGARDographie donne des informations sur les applications de simulation réalisées récemment dans le domaine des systèmes d'armes tactiques. Elle ne représente pas et ne prétend pas représenter un exposé exhaustif du sujet. Elle est plûtot destineé à rendre compte des tendances évolutives en termes d'aides et de techniques dans ce domaine d'application. Les techniques digitales et matériel dans le boucle sont examinés et des exemples de réalisations en simulation et de validation exécutées sur des systèmes opérationnels sont présentés.

DTIC COPY INSPECTED 4

Accession For
NTIS GRA&I ☑
DTIC TAB ☐
Unannounced ☐
Justification
By
Distribution/
Availability Codes
Dist | Avail and/or Special
A-1

CONTENTS

	Page
PREFACE	iii
	Reference
I: BACKGROUND	
THE ROLE OF SIMULATION IN THE RESEARCH AND DEVELOPMENT PROCESS FOR TACTICAL GUIDED WEAPONS by W.P.Albritton, Jr	1
II: DIGITAL SIMULATION TECHNIQUES	
COMPARISON OF STATISTICAL DIGITAL SIMULATION METHODS by P.Zarchan	2
A GENERIC SEEKER SIMULATION FOR THE EVALUATION OF ACTIVE RF GUIDANCE SYSTEMS by F.T.Campos	3
DIGITAL SIMULATION TECHNIQUES FOR END GAME PHENOMENA by M.E.Tanenhaus and D.J.Cart	4
III: HARDWARE IN-THE-THE-LOOP SIMULATION TECHNIQUES	
DESIGN CRITERIA FOR HARDWARE-IN-THE-LOOP SIMULATION FACILITIES by S.J.Powers and M.E.Sisle	5
COST EFFECTIVE SIMULATION FOR MILLIMETER WAVE GUIDANCE SYSTEMS by V.H.Maples and G.A.Eastman	6
RANGE DELAY TECHNIQUES FOR RADAR TARGET SIMULATORS by L.C.Buse	7
IV: SYSTEM SIMULATION AND VALIDATION TECHNIQUES	
SIMULATION VALIDATION EXPERIENCE – PATRIOT GUIDANCE SYSTEM by W.C.Morton	8
SIMULATION AVEC ELEMENTS REELS DES MISSILES ANTI-NAVIRES EXOCET par C.Renom, G. le Gallo et G.Selince	9
HELLFIRE SYSTEM MODEL VALIDATION by R.V.Hupp	10

THE ROLE OF SIMULATION IN THE RESEARCH AND DEVELOPMENT PROCESS FOR TACTICAL GUIDED WEAPONS

by

Dr W.P.Albritton, Jr
AMTEC Corporation
213 Ridgelawn Drive
Athens, AL 35611, USA

Summary

A brief commentary is provided on the general applicability of simulation techniques to the research and development process for tactical guided weapons. Weapon performance simulations are placed within the proper context of other areas of simulation which are applicable to the problem. Different implementation techniques for performance simulations are described.

Background

The typical weapon development process has four phases: concept, validation, full-scale development, and production. Simulation plays an important role in each phase as an aid to answering critical questions and making key decisions. The nature of the questions and decisions changes as the development process progresses. Simulation tools do not change very much through the various phases, but the accuracy of those tools does improve with the availability of more and better input data.

Generally speaking, whatever the development phase, the process is (or should be) concerned with weapon cost effectiveness. As illustrated in Figure 1, cost effectiveness relates a weapon's cost to its ability to accomplish some task. As the figure indicates, it is generally true that the more a weapon *does*, the more it *costs*. Increases in weapon accuracy and range, for example, generally come at the expense of increased cost.

The purpose of such cost effectiveness determinations is, of course, to aid in making decisions. In the case illustrated by Figure 1, the data regarding weapons A, B, and C are clear; the "best choice" of the three is not so clear. Requirements and other outside factors influence the "best choice" decisions. For example, if the decision to be made is which weapon (A, B, or C) to develop and the performance requirements are quite stringent (i.e., the weapon must *do* much), then weapon C is the clear choice.

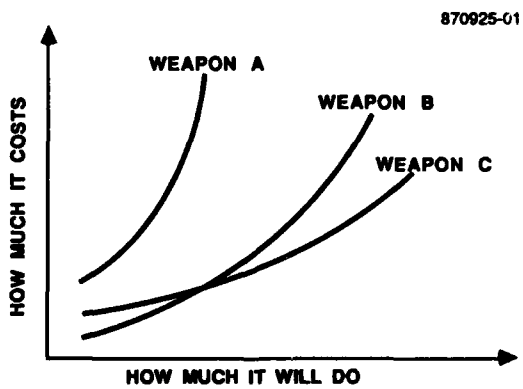

Figure 1. Weapon Cost Effectiveness

Suppose, however, that weapon A already exists and the question at hand is whether to develop weapon B or C. If the task to be accomplished does not have high priority relative to other requirements in competition for available funds, then the correct choice might be to delay the B/C choice and use weapon A in the interim.

Simulation Variety

The cost effectiveness process mentioned above is illustrated in Figure 2. The process produces the needed cost/accomplishment output data. In this simplified representation, there are two sets of inputs, the mission scenario and a weapon or weapon concept. The mission scenario is a description of what a weapon is required to do and in what context. Contextual information would include items such as delivery platform and supporting assets characterizations. A delivery platform might be a fighter aircraft (for an air-to-air missile), a helicopter (for an antitank missile), or an artillery piece (for a cannon-launched guided projectile). A variety of models and simulations is utilized in carrying out the cost effectiveness process shown in Figure 2.

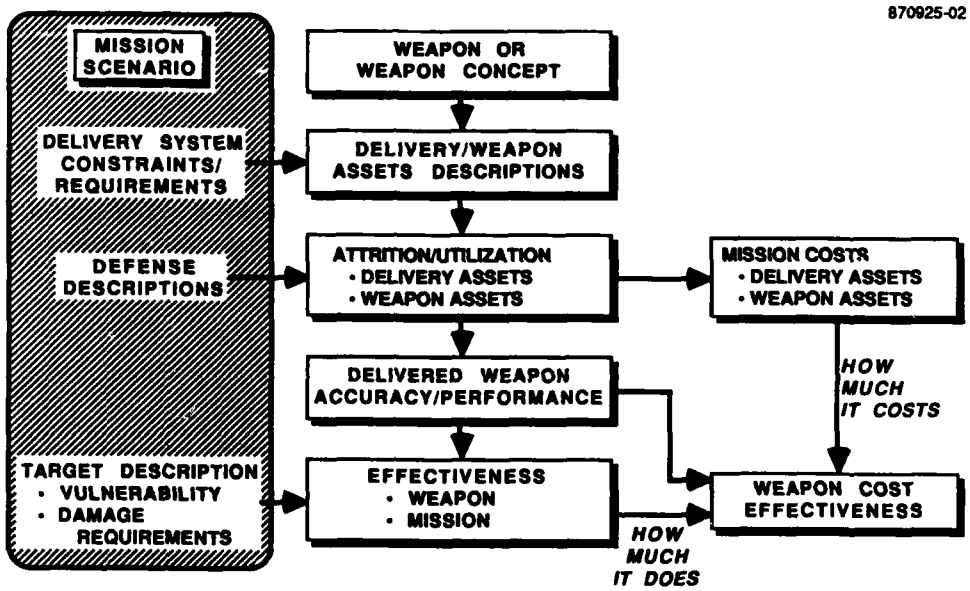

Figure 2. Cost Effectiveness Process

The mission scenario target descriptions include vulnerability models. Such models relate the target's ability to perform its mission as a function of the damage done to it, describe the various kinds of damage, and quantify the damage for various kinds of appropriate kill mechanisms.

Delivered weapon accuracy/performance simulations predict how close the weapon will come to the target and in what relative orientation. Models of the weapon are required which quantify the effects of all error sources, including errors associated with the delivery platform and target characteristics.

Weapon effectiveness requires simulations which relate weapon accuracy, kill mechanism characteristics, and target vulnerability through weapon/target interactions which produce some measure of merit such as a kill probability.

These are a few examples of simulations involved in the cost effectiveness process of Figure 2. Other simulations are also required in addressing areas such as attrition asset costs, mission effectiveness, etc. Aside from cost effectiveness, other large scale battle analysis and wargaming simulations are needed to examine the appropriate weapons mix, evaluate deployment options, assess threat response options, etc. Of the variety of simulation areas described above, the one closest to the weapons designers is the delivered weapon accuracy/performance simulation. It is through such simulations that design options are considered, subsystem performance allocations are made, and performance boundaries are predicted. This simulation area is the primary focus of the papers contained in this AGARDograph.

Weapon Performance Simulations

A weapon simulation, in this context, is a computer representation of the various equations (i.e., the models) which describe a weapon and the environment with which it interacts. Three ways to implement these simulation have evolved.

Analog computer simulations were used first, simply because they could carry out the necessary computations at the required speeds. The advent of faster digital computers led to hybrid (part analog, part digital) simulations. Some functions were convenient to implement in a digital machine (e.g., aerodynamic look-up tables) while others were more appropriate for analog implementations (e.g., control systems). A special case of the analog or hybrid implementation was the hardware-in-the-loop (HITL) simulation. In a HITL simulation, parts of the function are carried out by actual weapon hardware.

Completely digital simulations have been made possible by the continued evolution of faster (and cheaper) machines. Also, certain weapon functions which had been easy to implement by analog computers are becoming digitally executed in the weapon hardware (e.g., digital autopilots). The result of this evolution is that there are now, for all practical purposes, two types of weapon simulation implementations: digital and HITL, the latter being a combination of digital computers and actual weapon hardware.

HITL simulations require, in addition to computers, a variety of environmental effects simulation hardware. For example, using a missile seeker in a HITL simulation necessitates construction of a target simulator of some sort. The target simulator should appear, when viewed by the seeker, to be a realistic target in a realistic environment. How much realism is achieved is usually rather directly related to how much money is spent. The converse is only sometimes true.

Digital simulations fall into two categories: statistical and deterministic. The statistical variety are frequency-domain simulations, which are very efficient in that they produce measure-of-merit statistics (e.g., rms miss distance) in a single run. Techniques are also available for, in essence, running such simulations in reverse. That allows output errors to be allocated back to the input error sources so that the primary causes of output error can be easily identified. Limitations on the accuracy of statistical techniques arise from the linearizations necessarily performed and lack of precise error-source characterization. Even so, such techniques are very powerful and will tend to become more so as the ability to apply brute force computer power increases.

Deterministic simulations are time-domain representations which require multiple runs to produce output statistics by Monte Carlo techniques. Such simulations can be highly accurate. They are adept at handling nonlinearities and complicated decision processes. The drawback for a complex highly-accurate deterministic simulation is computer run time and the associated expense. Again, more and cheaper computer power works in favor of the simulation user.

Simulation Utilization

As noted above, the utilization of simulation varies through the concept, validation, full-scale development, and production phases of the weapon acquisition process. In the concept phase, the weapon models tend to be simple and contain many assumptions. The questions being addressed center around what the weapon could be and should be. The larger issues of military utility, mission effectiveness, and cost effectiveness are paramount.

In the validation phase, after a concept is selected, the focus shifts. What the weapon should be has been decided; now the issue is what the weapon can be. The details become more important. Simulations are used in design trades of different ways to perform the weapon's internal functions. Model accuracies are honed and improved as test data become available.

The focus shifts again in the full-scale development phase. The emphasis changes from what the weapon can be to what the weapon will be. HITL simulation becomes increasingly important in both the design process and in support of testing. One of the largest single benefits of simulation in the weapon R&D process is reduction of test costs. Simulations, carefully validated against appropriate live test data, provide the only cost-effective means for arriving at the performance and limitations of today's tactical weapons.

The remaining papers of this AGARDograph provide information on various techniques and aspects of simulation for tactical weapons.

COMPARISON OF STATISTICAL DIGITAL SIMULATION METHODS

by

Paul Zarchan
Principal Engineer, Systems, Design Laboratory
Missile Systems Division
Raytheon Company
Mail Stop M3-13, Hartwell Road
Bedford, Massachusetts 07130, USA

ABSTRACT

This paper compares the various statistical digital simulation methods used in the preliminary analysis and synthesis of a homing missile guidance system. A unifying example is used to illustrate the advantages and computer costs of each of the methods.

1. INTRODUCTION

In synthesizing a homing missile guidance system, the designer must, among other things, place specifications on the allowable measurement noise, determine subsystem bandwidths in order to ensure adequate stability margins, prevent component saturation, and evaluate total system performance.(1-4) budgets must also be developed showing how each error source contributes to performance degradation so that a balanced design can be achieved and system drivers can be identified.

Computerized methods of statistical analysis can play an invaluable role in the missile guidance system design and sizing process.(1-4) Methods of stochastic analysis are very useful in relating the effect of statistical disturbances, such as sensor noise and random target maneuver, to the overall performance of the system. Often, for missile guidance system analysis, the overall measure of performance turns out to be the root mean square, rms, miss distance.

The purpose of this paper is to compare various computerized statistical analysis methods and to show how they all can play a role in missile guidance system synthesis and analysis.

2. METHODS OF ANALYSIS

Various methods of statistical analysis exist for both linear and nonlinear noise driven systems. The adjoint technique and covariance analysis are exact methods for linear analysis while the Monte Carlo approach, CADET and SLAM are approximate methods for nonlinear analysis. Below is a brief description of each of the methods.

The adjoint(5-7) technique is based upon the system impulse response and can be used to exactly analyze linear, time-varying noise driven systems in one computer run. This technique not only provides exact performance projections of any quantity at a particular time but also shows how each of the disturbance terms (inputs) contributes to the total performance projection (output). Although the adjoint technique has mainly been used in missile guidance system design and analysis, its application has much broader potential.

Covariance analysis(8-9) is another computerized technique that can be used to exactly analyze linear, time varying noise driven systems in one computer run. With this method the covariance matrix of the system state vector is propagated as a function of time by the direct integration of a nonlinear matrix differential equation. Thus exact, total statistical performance projections of any state as a function of time can be obtained. This method of analysis is quite popular in problems associated with optimal estimators.

The Monte Carlo approach(10) is the most general method for obtaining performance projections of noise driven nonlinear time-varying systems. This approximate method is based upon direct simulation and consists of repeated simulation trials plus post-processing of the resultant data in order to do ensemble averaging. A large number of simulation trials are often required in order to provide confidence in the accuracy of the results, thus limiting its utility to that of an evaluation tool. However, because of its generality and ease of application, the Monte Carlo approach is probably the most popular method for nonlinear statistical analysis.

For many type of nonlinear systems the CADET method(11) can often be used as a less expensive alternative to the Monte Carlo approach in order to obtain approximate performance projections. The CADET method employs statistical linearization (random input describing functions)(12-13) in conjunction with covariance analysis to yield statistical performance projections in one computer run. CADET has proved itself to be a useful and efficient tool in the preliminary evaluation of missile guidance system performance(14).

SLAM(15) is another approximate computerized technique that can often be used in the statistical analysis of nonlinear systems. Essentially SLAM is a combination of the CADET and adjoint techniques. In addition to yielding accurate statistical performance projections, SLAM generates an approximate error budget showing how each disturbance influences total system performance. SLAM has also been shown to be a useful tool in the preliminary analysis of missile guidance system performance.

3. EXAMPLES

In this section each of the methods of analysis is more completely described and a unifying example from missile homing guidance is used to demonstrate the utility of each of the techniques.

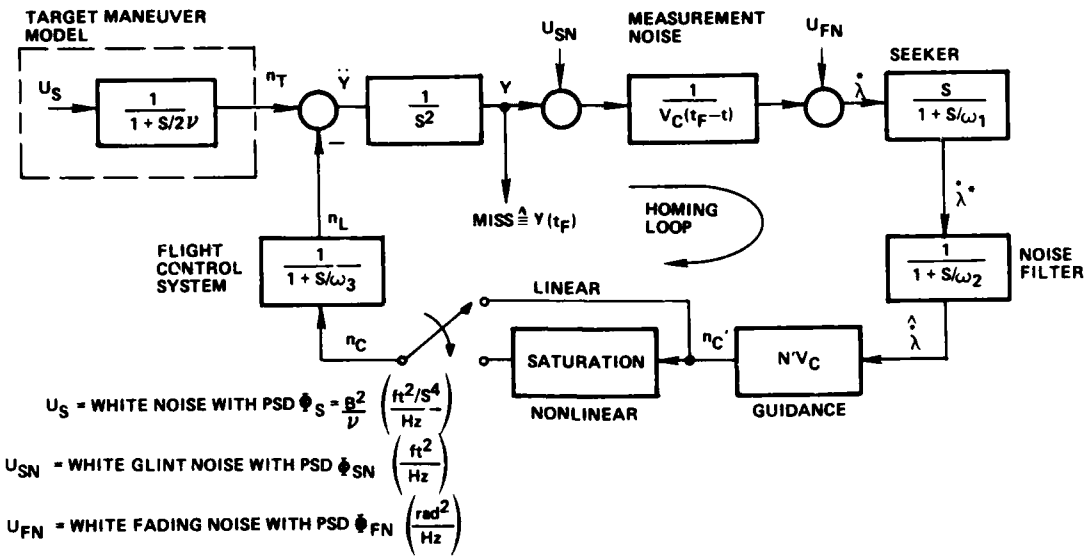

Figure 1. Block Diagram of Linear/Nonlinear Homing Loop

Figure 1 shows a simplified model of a missile homing loop in which missile and target motions are normal to the line-of-sight, LOS. The target travels at constant velocity and its lateral acceleration is a Poisson jinking maneuver (constant magnitude maneuver with random sign switching). This target maneuver process can be modeled as white noise through a single pole filter since its autocorrelation function is identical to the Poisson process.(16) The seeker measurement of the LOS rate is corrupted by white glint noise and white range independent (fading) noise with spectral densities Φ_{SN} and Φ_{FN} respectively.

Proportional navigation guidance converts the LOS rate estimate,(17) obtained from the single pole noise filter, into acceleration commands for the flight control system. Flight control system dynamics are also represented by a single pole network in this simplified model. If saturation effects are ignored, the model of Figure 1 is a linear but time-varying system driven by stochastic inputs. If acceleration saturation effects are included the model becomes nonlinear. The parameters for the homing loop model are identified in Table 1.

TABLE 1.
NOMINAL VALUES OF ALL SYSTEM PARAMETERS

NOMINAL CONDITIONS	NOMINAL VALUE SPECIFICATIONS
Seeker bandwidth, ω_1	20 rad/s
Noise filter bandwidth, ω_2	10 rad/s
Autopilot-airframe bandwidth, ω_3	10 rad/s
Target maneuver bandwidth, 2ν	$0.2s^{-1}$
rms target acceleration, B	161 ft/s^2
Closing velocity, V_c	3000 ft/s
Effective navigation ratio, N'	3
Spectral density of glint noise, Φ_{sn}	4 ft^2/Hz
Spectral density of fading noise, Φ_{fn}	1×10^{-6} rad^2/Hz
Time of flight, t_F	5s

4. ADJOINT TECHNIQUE

For every linear time-varying system there exists an adjoint system that can be constructed from the original system (given in block diagram form) by application of the following rules, which are equivalent to the mathematical definition of an adjoint system when the equations are expressed in state space form:

(1) Replace t by t_f-t in the arguments of all variable coefficients where t_f is the final time.

(2) Reverse all signal flow, redefine branch points as sum points, and vice versa. This will make inputs of the original system appear as outputs of the adjoint system and vice versa.

The impulse response of the adjoint system, h^*, and the impulse response of the original system, h, are related by:

$$h^* (t_f - t_I, t_f - t_0) = h (t_0, t_I) \tag{1}$$

where t_I is the impulse application time and t_0 is the observation time. The importance of this relationship becomes more apparent when it is desired to observe the values of the impulse response function of the original system at the final time, t_f, due to various impulse application times. This means that in order to generate $h (t_f, t_I)$ it becomes necessary to rerun the system response for each impulse application time as shown in Figure 2a.

However, if the observation time is the final time, only one run is required of the adjoint system, since:

$$h^* (t_f - t_I, 0) = h (t_f, t_I) \tag{2}$$

The adjoint impulse response is identical to the impulse response of the original system in every way, except it is generated backwards. The relationship between the two responses is illustrated in Figures 2a and 2b.

One of the most important features of the impulse response of the adjoint system is that it can be used to statistically analyze the original system in the presence of stochastic inputs. The rms response at the terminal time of a linear time-varying system driven by white noise is given by:

$$\sigma_{out}(t_f) = \sqrt{\Phi_{in} \int_0^{t_f} h^2(t_f, t_I)\, dt_I} \tag{3}$$

where Φ_{in} is the spectral density of the white noise input (assumed to be double-sided and stationary) in units of Hz and σ_{out} is the rms value of the output. As discussed previously, the simulation of Equation (3) is impractical because of the many computer runs needed to generate $h(t_f, t_I)$. However, by invoking Equation (2) we find that:

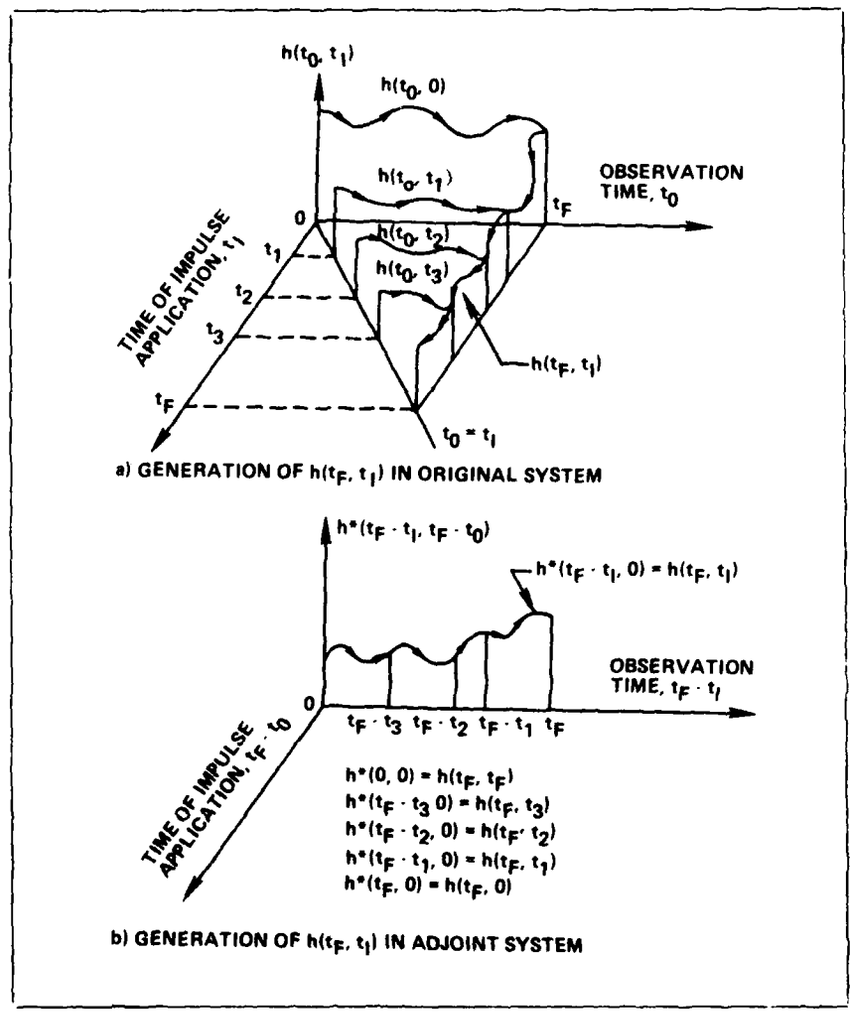

Figure 2. Impulse Responses of Original and Adjoint Systems are Related

$$\sigma_{out}(t_f) = \sqrt{\Phi_{in}\int_0^{t_f} h^*(t_f,t_I,0)^2 \, dt_I}$$

$$= \sqrt{-\Phi_{in}\int_{t_f}^{0} h^*(\tau,0)^2 \, d\tau} = \sqrt{\Phi_{in}\int_0^{t_f} h^*(\tau,0)^2 \, d\tau} \tag{4}$$

Therefore, the rms value of the ouput of the original system due to a white noise input can be found by squaring, integrating, and then taking the square root of the impulse response of the adjoint system in only one computer run.

Using the two rules given at the beginning of this section, an adjoint model of the homing guidance loop was constructed as is shown in Figure 3. According to theory, an impulse should be applied to the adjoint system at the equivalent location ($\dot{x}4$) to where the quantity of interest in the original system is output (y). For simulation purposes, an initial condition of unity on x4 rather than a unit impulse on its derivative is used. Note that the three inputs to the original system (target maneuver, glint noise, and fading noise) become outputs in the adjoint system (miss sensitivities due to target maneuver, glint noise, and fading noise). Since the sensitivity coefficients of the adjoint system do not depend on the spectral density levels of the error sources, the program does not have to be rerun if the spectral density levels change. Superposition permits the calculation of the total rms miss distance to be:

$$\sigma_y(t_F) = \left\{ \left[\frac{\sigma_y^2(t_F) \mid \text{Tgt Mvr}}{\Phi_S}\right] \cdot \Phi_S + \left[\frac{\sigma_y^2(t_F) \mid \text{Glint}}{\Phi_{sn}}\right] \Phi_{sn} + \left[\frac{\sigma_y^2(t_F) \mid \text{Fading}}{\Phi_{fn}}\right] \Phi_{fn} \right\}^{1/2} \tag{5}$$

The rms level of the individual miss distance contributors along with the total rms miss distance are plotted vs. adjoint time in Figure 4 (Adjoint time can be interpreted here as either time-of-flight or time-to-go at which disturbances occur). Note that for this system the major contributor to the miss distance is glint noise. At minimal extra expense, other disturbance sensitivities can also be obtained in order to further quantify system behavior. For example, in Figure 5, the miss distance sensitivity due to a step in target acceleration (x10) is plotted against adjoint time. Figure 5 indicates that the

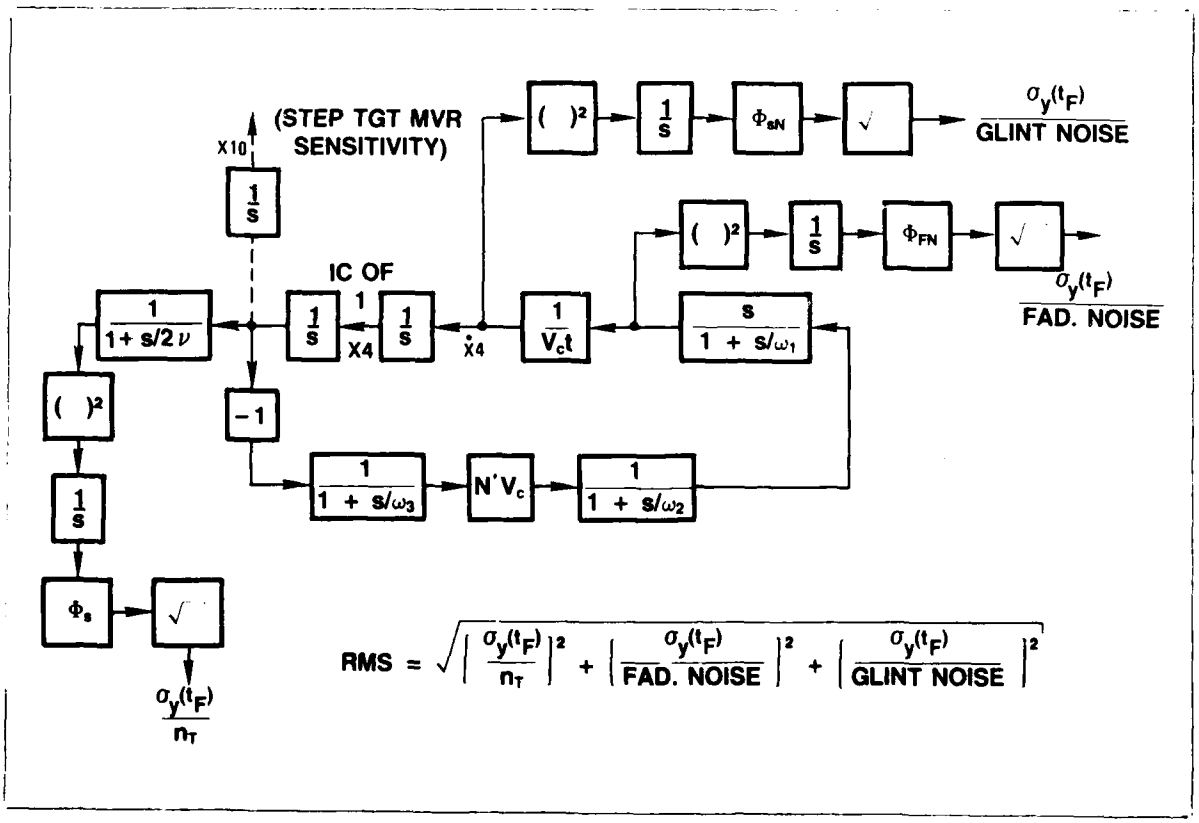

Figure 3. Adjoint Model of Linear Homing Loop

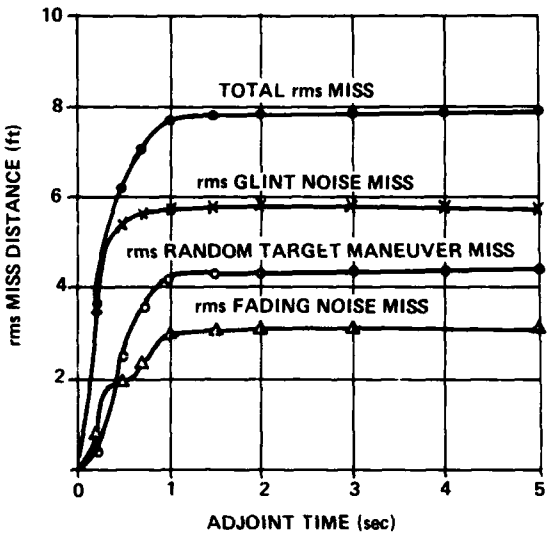

Figure 4. RMS Miss Distance Error Budget is Automatically Generated by Adjoint Method

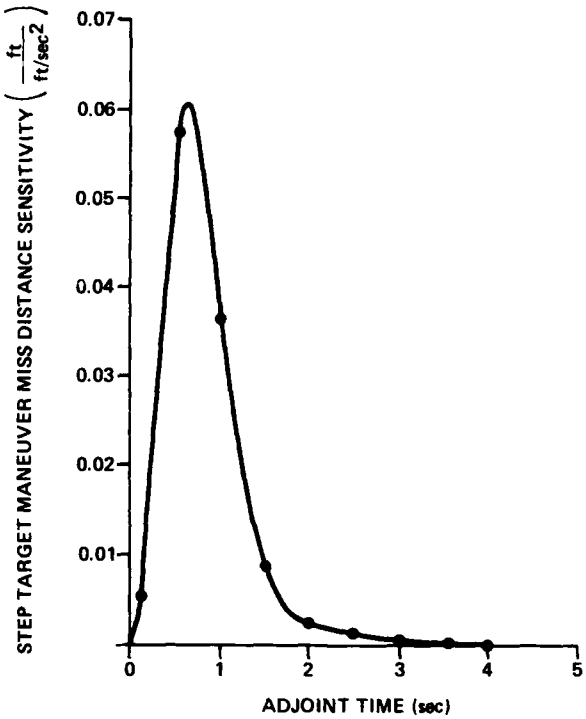

Figure 5. Adjoint Provides Information on Performance Sensitivity Due to Target Maneuver

optimal time for the target to maneuver (to maximize miss distance) is about 0.6s before intercept. It is also apparent from this curve that if the target maneuvers too soon (adjoint time large), the resulting miss distance will be small. In a well designed missile guidance system, the miss distance sensitivity curve for a step in target acceleration always approaches zero as adjoint time approaches infinity. The amount of adjoint time it takes for this curve to settle down is directly related to the overall guidance system time constant. Therefore, it can be seen that a great deal of information concerning system performance and behavior is available from one adjoint solution.

5. COVARIANCE ANALYSIS

The dynamics of a linear time-varying stochastic system can be represented by the following first-order vector differential equation:

$$\dot{x}=F(t)x(t)+u(t) \tag{6}$$

where x(t) is the system state vector and u(t) is a white noise vector with spectral density matrix, Q(t). The differential equation for the propagation of the covariances is[8,9]

$$\dot{X} = F(t)X + XF^T(t) + Q(t) \tag{7}$$

The diagonal elements of X(t) represent the mean square values of the state variables because all random quantities are assumed to have zero mean in this paper. The off-diagonal elements represent the degree of correlation between the various state variables. Therefore, the integration of Equation (7) represents another direct method of analyzing the statistical properties of x(t) in one computer run.

The usefulness of covariance analysis is easily demonstrated by again considering the linear homing guidance loop of Figure 1. The system equation in matrix form can be expressed as:

$$\begin{bmatrix} \dot{n}_T \\ \ddot{y} \\ \dot{y} \\ \dot{D} \\ \dot{\hat{\lambda}} \\ \dot{n}_L \end{bmatrix} = \begin{bmatrix} -2\nu & 0 & 0 & 0 & 0 & 0 \\ 1 & 0 & 0 & 0 & 0 & -1 \\ 0 & 1 & 0 & 0 & 0 & 0 \\ 0 & 0 & \frac{\omega_1}{V_c(t_F-t)} & -\omega_1 & 0 & 0 \\ 0 & 0 & \frac{\omega_1\omega_2}{V_c(t_F-t)} & -\omega_1\omega_2 & -\omega_2 & 0 \\ 0 & 0 & 0 & 0 & N'V_c\omega_3 & -\omega_3 \end{bmatrix} \cdot \begin{bmatrix} n_T \\ \dot{y} \\ y \\ D \\ \hat{\lambda} \\ n_L \end{bmatrix} + \begin{bmatrix} 2\nu u_s \\ 0 \\ 0 \\ \omega_1\left(u_{fn} + \frac{u_{sn}}{V_c t_{go}}\right) \\ \omega_1\omega_2\left(u_{fn} + \frac{u_{sn}}{V_c t_{go}}\right) \\ 0 \end{bmatrix} \tag{8}$$

$$\dot{x} = F \cdot x + u$$

where D is the seeker dish angle and t_{go} is the time-to-go (t_F-t).

Integration of the covariance propagation equation (Equation (7)) yields the state covariances, X(t), where F(t) is defined in Equation (8) and Q(t), which can be found from Equation (8), is given by:

$$Q(t) = \begin{bmatrix} 4\nu B^2 & 0 & 0 & 0 & 0 & 0 \\ 0 & 0 & 0 & 0 & 0 & 0 \\ 0 & 0 & 0 & 0 & 0 & 0 \\ 0 & 0 & 0 & \omega_1^2 \left[\Phi_{fn} + \frac{\Phi_{sn}}{V_c^2 (t_F - t)^2}\right] & \omega_1^2 \omega_2 \left[\Phi_{fn} + \frac{\Phi_{sn}}{V_c^2 (t_F - t)^2}\right] & 0 \\ 0 & 0 & 0 & \omega_1^2 \omega_2 \left[\Phi_{fn} + \frac{\Phi_{sn}}{V_c^2 (t_F - t)^2}\right] & \omega_1^2 \omega_2^2 \left[\Phi_{fn} + \frac{\Phi_{sn}}{V_c^2 (t_F - t)^2}\right] & 0 \\ 0 & 0 & 0 & 0 & 0 & 0 \end{bmatrix} \tag{9}$$

Figure 6, which was obtained by integrating Equation (7), is the rms relative separation between the missile and target, X(3,3) as a function of time. At the end of flight, the value of this quantity is the rms miss distance:

$$\text{rms miss distance} = \sqrt{X(3,3)\big|_{t=t_F}} \tag{10}$$

Of course, the values of the miss distances resulting from the adjoint technique and covariance analysis are identical. In covariance analysis, rms miss distance and statistical information concerning all the states, such as rms acceleration shown in Figure 7, are also available so that it is also possible to validate the assumption concerning system linearity (i.e., no acceleration saturation).

6. MONTE CARLO APPROACH

The Monte Carlo approach can be used for the statistical analysis of either time-varying linear or nonlinear systems driven by white noise. The method is based upon direct simulation of the system under consideration. Post processing of the data is required because many computer runs are needed in order to obtain statistical performance projections. Usually Gaussian random number generators are used to approximate white noise according to:

$$\sigma = \sqrt{\frac{\Phi}{H}} \tag{11}$$

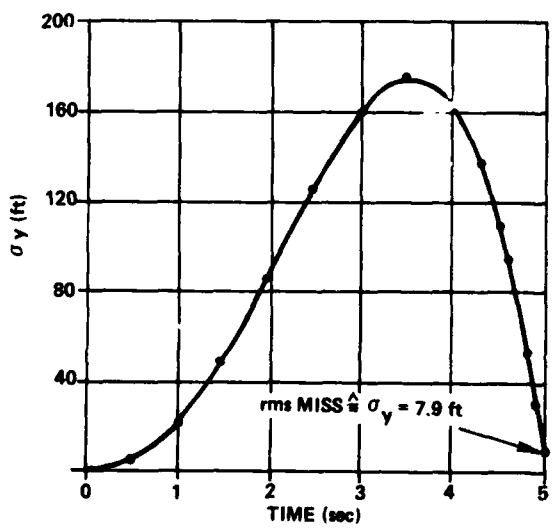

Figure 6. Covariance Analysis Provides RMS Trajectory Profile

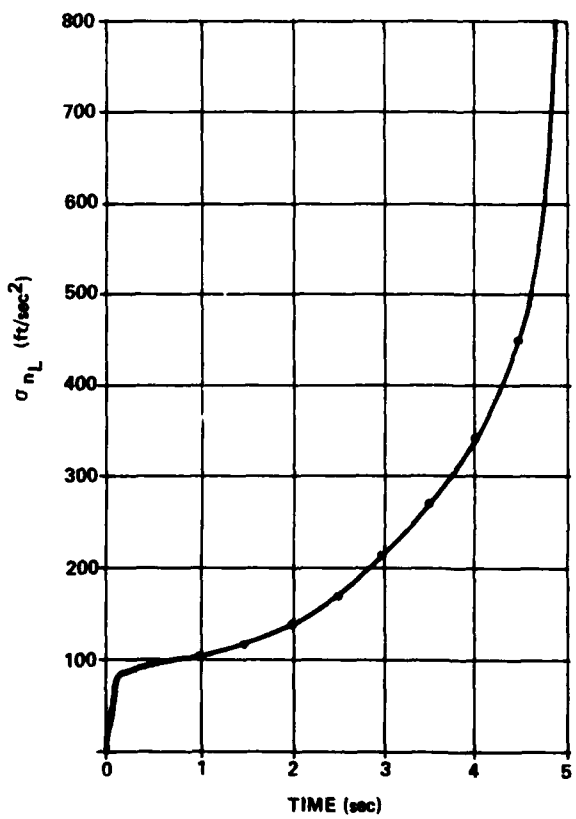

Figure 7. Covariance Analysis Provides RMS Acceleration Profile

where σ is the standard deviation of the Gaussian distribution, Φ is the power spectral density of the white noise in units of Hz, and H is the computer integration interval (time spacing between random number calls). The miss distance standard deviation is calculated from:

$$\sigma_{MISS} = \frac{\sqrt{\sum_{i=1}^{N} \left(y_i(t_F) - \bar{y}(t_F)\right)^2}}{N-1} \tag{12}$$

where

$$\bar{y}(t_F) = \frac{\sum_{i=1}^{N} y_i(t_F)}{N} \tag{13}$$

where N represents the number of computer runs in the Monte Carlo sample size and $y_i(t_F)$ is the miss distance from the ith run. The Monte Carlo derived standard deviation is approximate and has its own statistics since it's based upon a finite number of runs. Therefore, the Monte Carlo estimate must be discussed in a probabilistic sense. This is usually accomplished by expressing our confidence in that estimate. For example, if statistics are Gaussian distributed, confidence intervals can be calculated and are shown in Figure 8. The figure shows that if a 50 run Monte Carlo sample size produced a unity standard deviation estimate, there would be 95% confidence that the actual standard deviation was between .85 and 1.28. Increasing the sample size to 200 runs reduces the uncertainty, giving us 95% confidence that the actual standard deviation lies between .91 and 1.12.

The homing loop of Figure 1, with the switch in the nonlinear mode, was simulated with a 200 run Monte Carlo sample size. A brief study was conducted in which the missile acceleration limit was made a parameter. Figure 9 shows the results of the study along with the 95% confidence intervals. Here we can see that the acceleration limit has a profound influence on miss distance, and only when the acceleration limit is large do the results approach that of the linear analysis. The 95% confidence limits also indicate that the answers have a large degree of uncertainty even though a large number of computer runs were made.

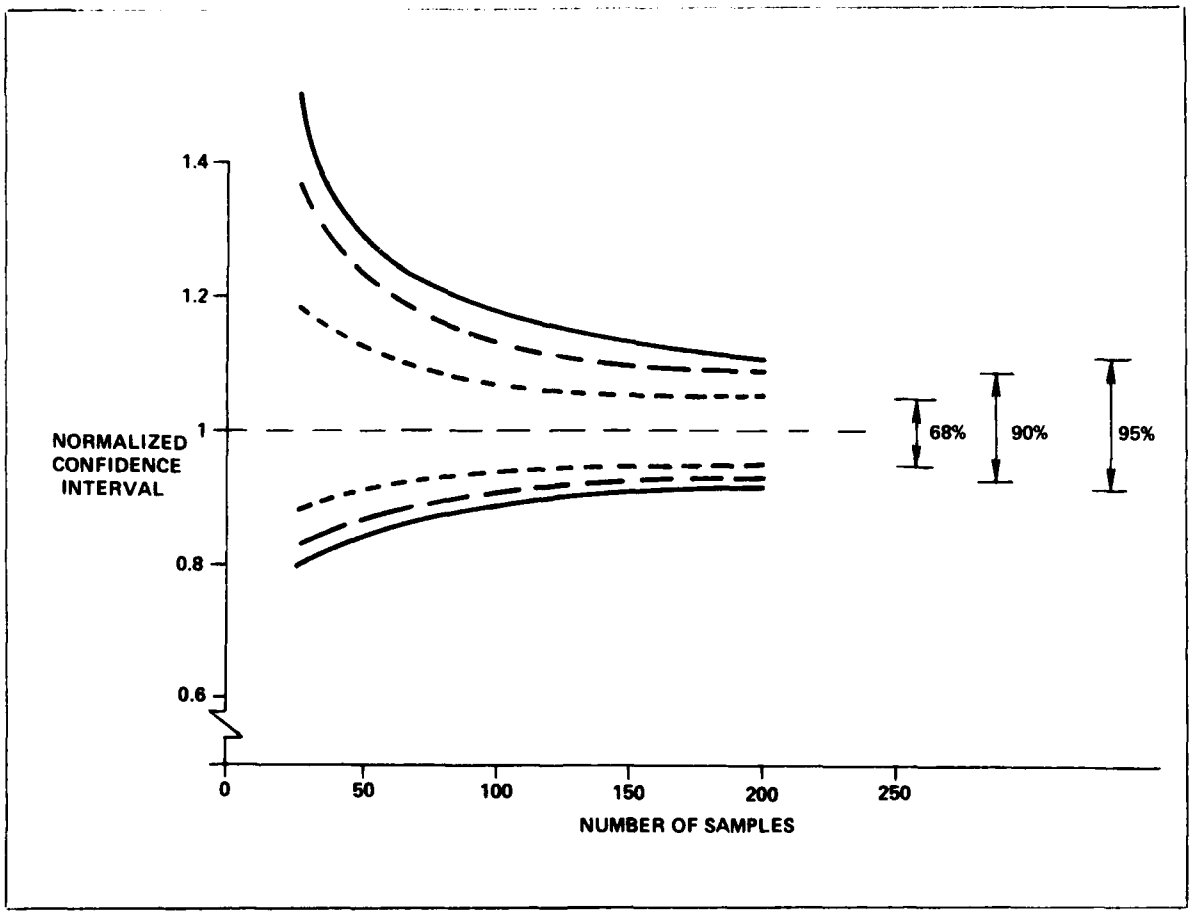

Figure 8. Theoretical Confidence Intervals for Gaussian Distributed Random Variable

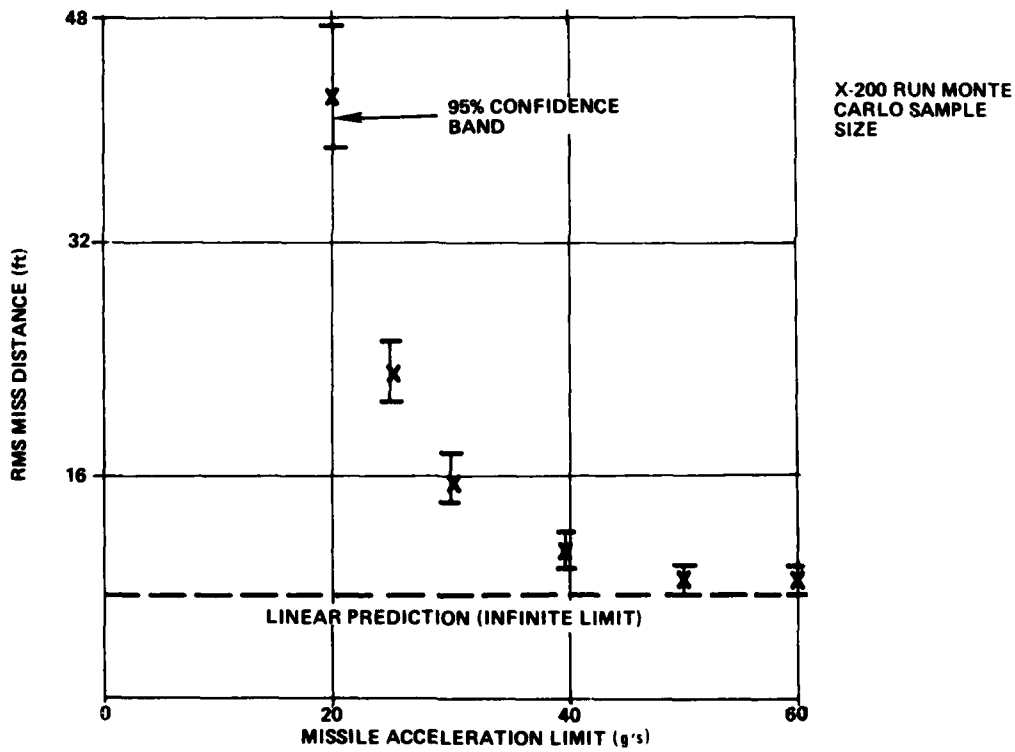

Figure 9. Acceleration Limit Study Utilizing Monte Carlo Approach

7. STATISTICAL LINEARIZATION

A useful tool in analyzing nonlinear systems having random inputs is the method of statistical linearization. With this technique, the nonlinear element is replaced by an equivalent gain, where the gain depends upon the assumed form of the input signal to the nonlinearity. Booton[12] developed a simple technique, which will be shown later, for finding the equivalent gain. Consider a nonlinear system with input x(t) and output y(t), in which we would like to replace the nonlinear element with some equivalent gain K_{eq}. The error signal, e(t), is defined as the difference between y(t) and the equivalent gain output. If x(t) is a zero-mean random process, we can find K_{eq} by first computing the mean-square value of the error signal e(t).

$$\overline{e^2} = \overline{y^2} - 2K_{eq}\,\overline{xy} + K_{eq}^2\,\overline{x^2} \tag{14}$$

We can find the minimum value of $\overline{e^2}$ by setting its derivative equal to zero yielding:

$$K_{eq} = \overline{xy}/\overline{x^2} = \int_{-\infty}^{\infty} xyp(x)\,dx \Big/ \int_{-\infty}^{\infty} x^2 p(x)\,dx \tag{15}$$

If the input signal, x(t), is a zero-mean Gaussian random process with the following probability density function,

$$p(x) = (1/\sigma_x\sqrt{2\pi})\; e^{-x^2/2\sigma_x^2} \tag{16}$$

where σ_x is the rms value of x(t), then the equivalent gain becomes

$$K_{eq} = \frac{1}{\sigma_x^3\sqrt{2\pi}} \int_{-\infty}^{\infty} xye^{-x^2/2\sigma_x^2}\,dx \tag{17}$$

Input-sensitive gains of this type, which approximate the transfer characteristics of the nonlinearity, are termed random input describing functions and are tabulated for the most important nonlinearities in Reference (13). Statistical linearization may be demonstrated by calculating the describing function for one of the most important nonlinearities in a missile guidance system, namely the acceleration saturation. Consider the limiter of Figure 10.

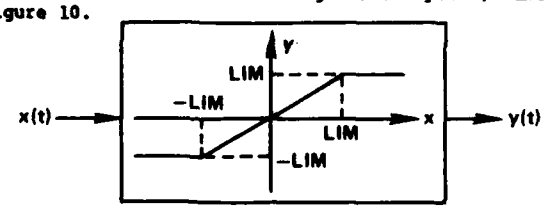

Figure 10. Input-Output Characteristics of a Limiter

The describing function, as calculated from Equation (17) becomes:

$$K_{eq} = \frac{-\lim}{\sigma_x^3\sqrt{2\pi}} \int_{-\infty}^{-\lim} x e^{-x^2/2\sigma_x^2}\,dx + \frac{1}{\sigma_x^3\sqrt{2\pi}} \int_{-\lim}^{\lim} x^2 e^{-x^2/2\sigma_x^2}\,dx + \frac{\lim}{\sigma_x^3\sqrt{2\pi}} \int_{\lim}^{\infty} x e^{-x^2/2\sigma_x^2}\,dx \tag{18}$$

Evaluation of the preceding integral leads to:

$$K_{eq} = \frac{1}{\sigma_x\sqrt{2\pi}} \int_{-\lim}^{\lim} e^{-x^2/2\sigma_x^2}dx \tag{19}$$

Equation (19) can be rewritten in terms of the probability integral as:

$$K_{eq} = 2\left[\frac{1}{\sigma_x\sqrt{2\pi}} \int_{-\infty}^{\lim} e^{-x^2/2\sigma_x^2}dx\right] - 1 \tag{20}$$

The preceding integral can be found by table lookup or can be approximated to five-place accuracy (18) by:

$$K_{eq} = 1 - (2/\sqrt{2\pi})e^{-\lim^2/2\sigma_x^2} \times (0.4361836\omega - 0.1201676\omega^2 + 0.937298\omega^3) \tag{21}$$

where

$$\omega = \frac{1}{1 + (0.33267 \times \lim)/\sigma_x} \tag{22}$$

The describing function for the limiter depends, as one would expect, only on the value of the limit, lim, and the rms value of the input signal, σ_x, and is displayed in Figure 11.

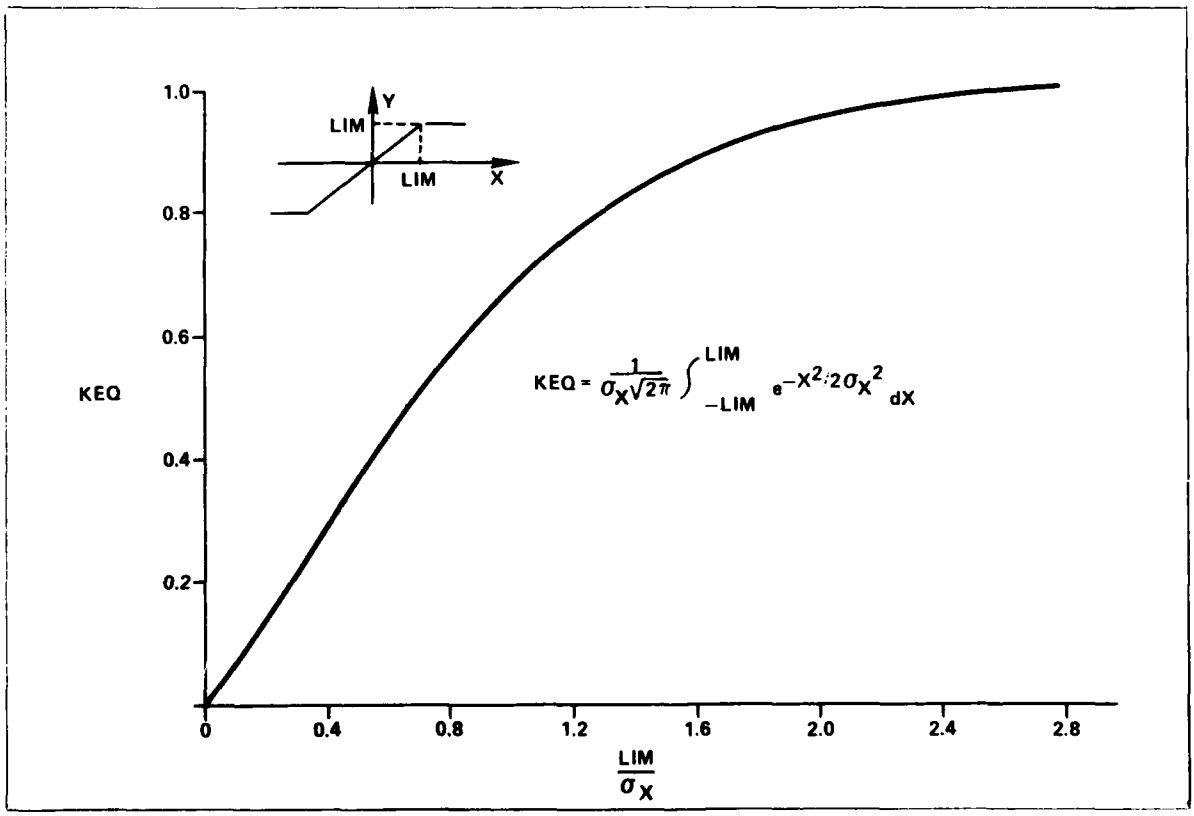

Figure 11. Random Input Describing Function Approximation to Limiter

8. CADET METHOD

The Covariance Analysis Describing Function Technique (CADET) is an approximate computerized technique for analyzing the statistical behavior of nonlinear stochastic systems. Basically CADET combines random input describing function analysis with ordnary covariance analysis. The describing functions are derived based upon the Gaussian assumption. Although at first this assumption appears to be very restrictive, it is not because most dynamical systems contain more linear than nonlinear elements. The low-pass filtering in these systems insures that non-Gaussian nonlinearity outputs result in nearly Gaussian inputs, as signals circulate in the system of interest. The principal steps to be followed in the application of the CADET method to missile guidance systems are:

1) Replace each nonlinear element by its corresponding random input describing function gain, based upon an assumed Gaussian probability density function for the input to the nonlinearity.

2) Using the resulting linear system model, employ conventional covariance analysis techniques to propagate the statistics of the system state vector, recognizing that the describing function gains are functions of those statistics.

3) Compute the rms miss distance at the intercept time from the elements of the system covariance matrix.

The CADET method may be demonstrated by once again considering the example of Figure 1 in the nonlinear mode (with saturation). The acceleration saturation nonlinearity is first replaced by a random input describing function, K_{lim}. The linearized system equation then becomes:

$$\begin{bmatrix} \dot{n}_T \\ \ddot{y} \\ \dot{y} \\ \dot{D} \\ \dot{\hat{\lambda}} \\ \dot{n}_L \end{bmatrix} = \underbrace{\begin{bmatrix} -2\nu & 0 & 0 & 0 & 0 & 0 \\ 1 & 0 & 0 & 0 & 0 & -1 \\ 0 & 1 & 0 & 0 & 0 & 0 \\ 0 & 0 & \dfrac{\omega_1}{V_c(t_F-t)} & -\omega_1 & 0 & 0 \\ 0 & 0 & \dfrac{\omega_1\omega_2}{V_c(t_F-t)} & -\omega_1\omega_2 & -\omega_2 & 0 \\ 0 & 0 & 0 & 0 & N'V_cK_{lim}\omega_3 & -\omega_3 \end{bmatrix}}_{F} \cdot \begin{bmatrix} n_T \\ \dot{y} \\ y \\ D \\ \hat{\lambda} \\ n_L \end{bmatrix} + \begin{bmatrix} 2\nu u_s \\ 0 \\ 0 \\ \omega_1\left[U_{fn} + \dfrac{U_{sn}}{V_c(t_F-t)}\right] \\ \omega_1\omega_2\left[U_{fn} + \dfrac{U_{sn}}{V_c(t_F-t)}\right] \\ 0 \end{bmatrix} \tag{23}$$

Equation (7) is then integrated to find X(t) where Q is still given by Equation (9) and F is obtained from Equation (23) .

The describing function gain for the limiter (derived in the previous section) is a function of the statistics of the unlimited commanded acceleration, n_c' and the limit level, n_{lim}, and can be computed from Equations (21) and (22). The rms level of the input signal to the nonlinearity σ_{nc}' is calculated by first expressing the unlimited commanded acceleration n_c' as a function of the states. The mean-square value then becomes:

$$\sigma^2_{n_c'} = (N'V_c)^2 X(5,5) \tag{24}$$

A CADET program was constructed for the system of Figure 1 using the input values of Table 1. Cases were run in which the missile acceleration limit, n_{lim}, was treated as a parameter (as was done with the Monte Carlo analysis) and the results of this study are shown in Figure 12. Only six CADET runs were

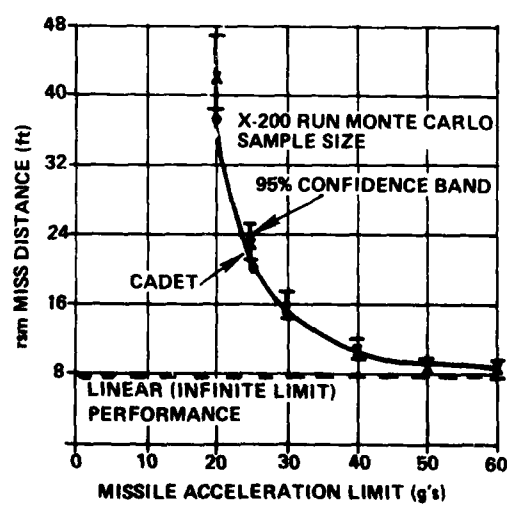

Figure 12. Acceleration Limit Study Utilizing CADET Approach

needed to generate these results. Superimposed on these figures are the previous results generated using the Monte Carlo method with a sample size consisting of 200 runs. It can be seen from this example that CADET is extremely accurate. Reference 14 also obtains results indicating CADET accuracy to be equivalent to Monte Carlo sets consisting of hundreds of flights.

9. SLAM

The Statistical Linearization Adjoint Method (SLAM) is also an approximate computerized technique for the complete statistical analysis of noise driven nonlinear systems.

Basically this technique uses the CADET method in conjunction with the adjoint technique. The principal steps in SLAM are:

1) Replace each nonlinear element in the original system by its corresponding random input describing function gain, based upon an assumed Gaussian probability density function for the input to the nonlinearity.

2) Using the resulting linear system model, employ conventional covariance analysis techniques to propagate the statistics of the system state vector.

3) Store the resulting describing function gains for each nonlinearity as a function of time.

4) Generate an adjoint model of the linearized system model by replacing t by t_F-t in the arguments of all variable coefficients (including describing function gains) and reversing signal flow so that the inputs of the original system will appear as outputs of the adjoint system.

5) Propagate the system in adjoint time.

The SLAM system will not only yield the identical rms miss distance to that of the CADET system, but will also show how the individual error disturbances contribute to the total rms miss distance. This error budget is approximate and, strictly speaking, is valid only for the case for which the K_{lim} describing function gain time history is valid. Therefore, it is not safe to extrapolate the results to obtain estimates of miss distance for different error source input levels. However, this type of error disturbance breakdown is extremely useful in that it flags the major contributors to the total rms miss distance in the nonlinear system. This error budget is no less accurate but a lot less expensive than one generated by the brute force method when Monte Carlo or CADET techniques are used. The brute force method implies that runs must be generated with only one error source at a time. The total rms miss distance can then be calculated by appropriately combining the miss contributions from each error source. In nonlinear systems, the total rms miss (obtained from running all error inputs at once) does not necessarily equal the appropriate combination of the individual error sources.

Sensitivity functions (i.e., sensitivity due to a step-target maneuver), can also be printed out at no extra cost in order to get an indication of system behavior, i.e., relative stability. Again strictly speaking, these sensitivity functions have no meaning in the sense that miss distances can be calculated from them. However, since these sensitivity functions, such as the sensitivity due to a step target maneuver, represent the impulse response of the system, valuable insight into system behavior can be gained by monitoring this output.

The SLAM concept is also useful in that it has a self-checking capability. That is, if the rms miss distance of the adjoint portion of the program does not agree with the rms miss distance of the CADET portion, it is known that either a programming or conceptual error exists within the program. Of course, with ingenuity, it is still possible for the user to make undetected errors, but the SLAM concept considerably reduces this possibility.

As a demonstration of the utility of SLAM, the nonlinear stochastic guidance system of Figure 1 is again reconsidered. A CADET portion of the SLAM program is first generated using the inputs of Table 1. The CADET portion of the program is run in order to find the time history of the describing function, K_{lim}. The SLAM program then reverses, in time, this describing function (replace t by t_F-t) yielding K_{lim}*. The reversed describing function gain, K_{lim}*, is then entered into a linearized adjoint model of the original nonlinear system, as shown in Figure 13. The adjoint portion of the SLAM program is then run in order to generate an approximate error budget for the nonlinear system.

A program utilizing the SLAM technique was run with the acceleration limit, n_{lim}, as a parameter. The describing function gains, resulting from the CADET portion of the program, are shown for typical values of n_{lim} in Figure 14. As theory predicts, the gains are unity when no saturation is taking place, and they decrease in value as the saturation becomes deeper.

The total rms miss distance error budget obtained from SLAM as a function of the missile acceleration limit is plotted in Figure 15. Note that the total rms miss distance for each of the acceleration limits corresponds exactly to the results of the CADET program (see Figure 12). This must be true if no programming or conceptual errors have been made in implementing SLAM. The error budget tells us that when the system is only slightly in saturation (n_{lim} = 60g), the major contributor to the total rms miss distance is glint noise (see Figure 4 for confirmation). As saturation increases (n_{lim} decreases), the major contributor to the total rms miss distance quickly becomes the random target maneuver disturbance. On the other hand, the contributions to the miss from fading and glint noise slightly decrease as saturation increases. In this case, saturation acts as additional filtering and thus the result is not surprising. This type of error disturbance breakdown provided by SLAM can be extremely useful to the guidance system designer in developing a balanced system.

Finally, Figure 16 is a plot of the sensitivity function due to a step-target maneuver. Although this sensitivity function cannot be used in calculating the miss distance due to a step-target maneuver, it can be used in gaining insight into system behavior. Mathematically, it is useful because it

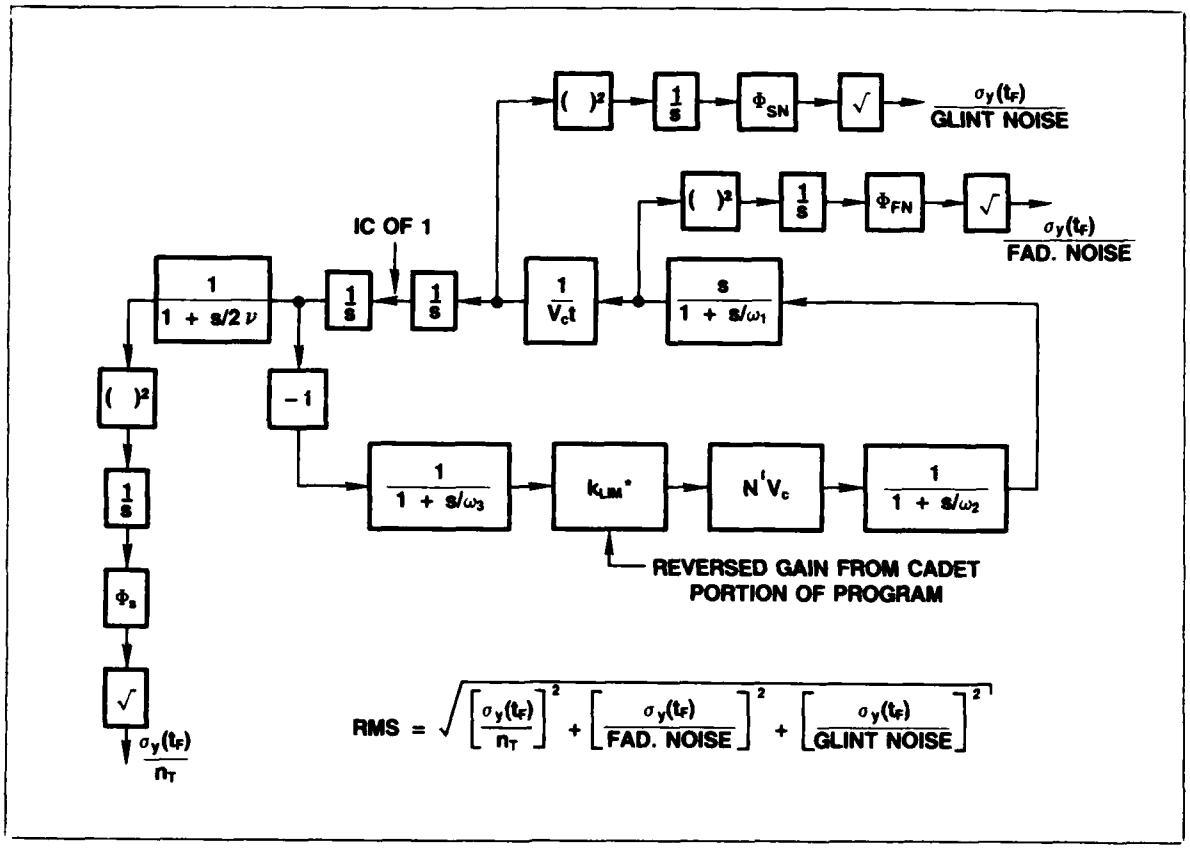

Figure 13. SLAM Model of Nonlinear Homing Loop

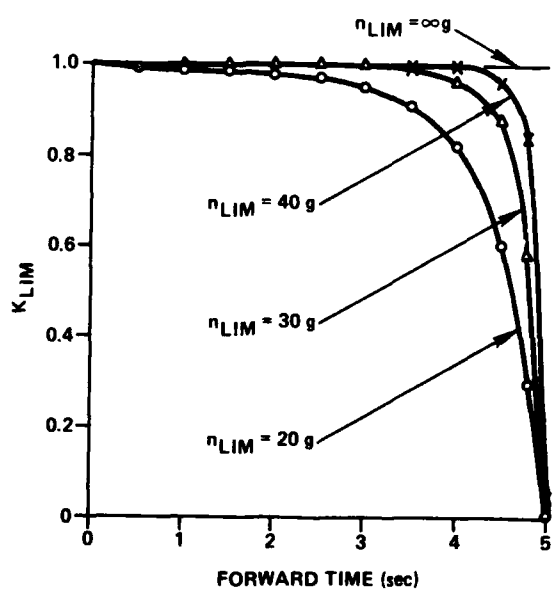

Figure 14. Describing Functions for Various Acceleration Limits Vs. Forward Time

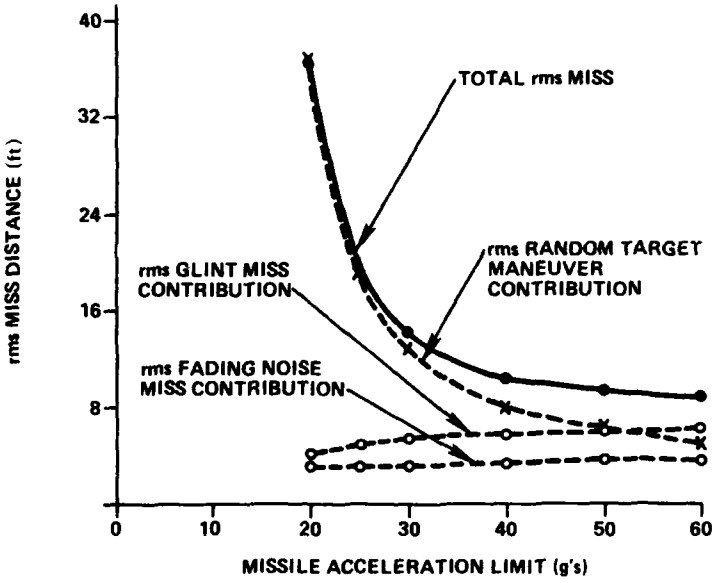

Figure 15. Acceleration Limit Study Utilizing SLAM Approach

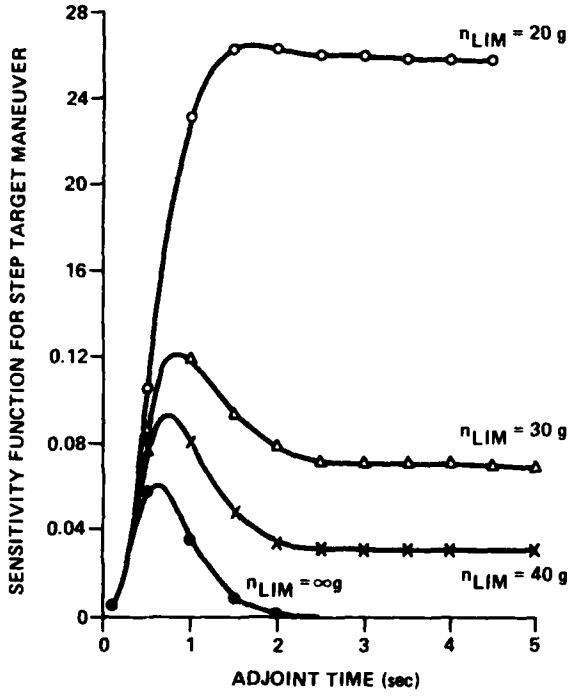

Figure 16. SLAM Provides Information on Performance Sensitivity Due to Target Maneuver

represents the impulse response of the quasi-linearized system. Figure 16 shows that in the linear case ($n_{lim}^{=\infty}$), the curve peaks and then quickly approaches zero (see also Figure 5). This should be the case in a well-designed missile guidance system employing proportional navigation. That is, a target maneuver occurring at long times-to-go (at least ten guidance time constants) should not contribute to the miss distance. However, as can be seen from Figure 16, the introduction of an acceleration limit causes the miss distance sensitivity to approach asymptotic values other than zero (this is common in proportional navigation systems which are using too small a value for the effective navigation ratio). For acceleration limits even less than shown in Figure 16, the sensitivity function would increase monotonically. Although, strictly speaking, this is not an unstable system, it is a system that cannot guide effectively on maneuvering targets. This type of information is also valuable to the guidance system designer.

10. QUALITATIVE COMPARISON

The decision concerning which of the computerized methods of statistical analysis to use is a function of the system under consideration and information desired from the analysis. At times it may even be advantageous to use several of the methods in order to check the results and gain more insight into all aspects of the problem.

The Monte Carlo method is the most general and easiest to apply of all the available techniques. Its application requires only the addition of random number generators and a post-processing routine to a simulation of the system equations. The system equations can often be written by inspection of a block diagram of the system. The adjoint technique is nearly as easy to implement as the Monte Carlo method since adjoint equations can be written by inspection of a modified block diagram of the system. The modified diagram can be obtained from the original block diagram of the system by the use of tracing paper and a few simple rules(5). On the other hand, covariance analysis is more difficult to implement, since the system equation must first be expressed in state space form. Extreme care must be taken in systems containing both analog and digital sections. Both the CADET and SLAM techniques are best suited to problems which are essentially linear except for the inclusion of specific nonlinearities such as saturations, dead zone, etc. Both techniques are more difficult than the Monte Carlo method to implement and about the same order of difficulty as covariance analysis.

Each of the methods of statistical analysis is vastly different in terms of computer running time. Cost is proportional to the number of differential equations needed to describe systems behavior (number of integrations) and the number of computer runs needed to perform a statistical analysis. The Monte Carlo method, unlike the other methods, requires that many computer runs be made in order to perform an accurate statistical analysis. For linear systems analysis, both the adjoint and covariance methods of analysis are exact. For an "n state system" the adjoint technique requires the integration of n differential equations, whereas covariance analysis requires the integration of n^2 differential equations. For nonlinear systems analysis there are no exact methods of statistical analysis. It has been shown that CADET and SLAM accuracy is comparable to that of hundreds of Monte Carlo runs.(11,14,15) For an "n state system" CADET requires the integration of n^2 equations, whereas SLAM requires the integration of $n^2 + n$ equations. With cost defined as

$$\text{COST} \triangleq \text{Number of Equations X Number of Runs} \tag{25}$$

the methods of statistical analysis can be compared to each other. Figures 17 and 18 compare the appropriate methods of analysis for linear and nonlinear systems. It can be seen that for high order systems the cost of either covariance analysis, CADET or SLAM can exceed that of Monte Carlo.

11. SUMMARY

The various methods of computerized statistical analysis have been compared both quantitatively and qualitatively. It is shown that for linear system analysis the method of adjoints and covariance analysis can be used to provide exact performance projections. For nonlinear systems analysis the CADET and SLAM methods can often be used as efficient alternatives to the Monte Carlo method.

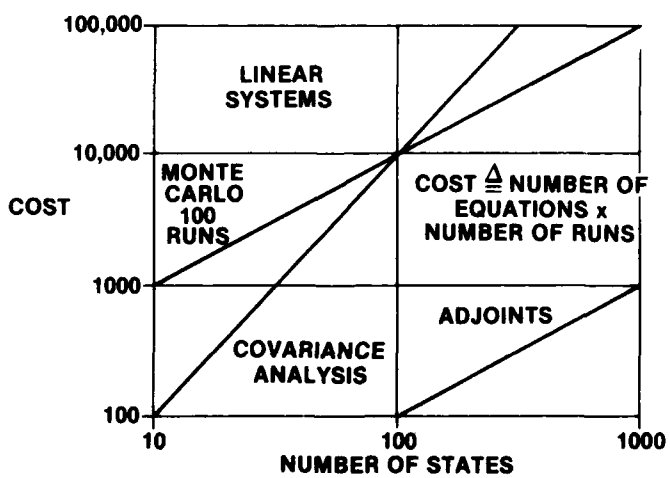

Figure 17. Cost Comparison for Linear Systems

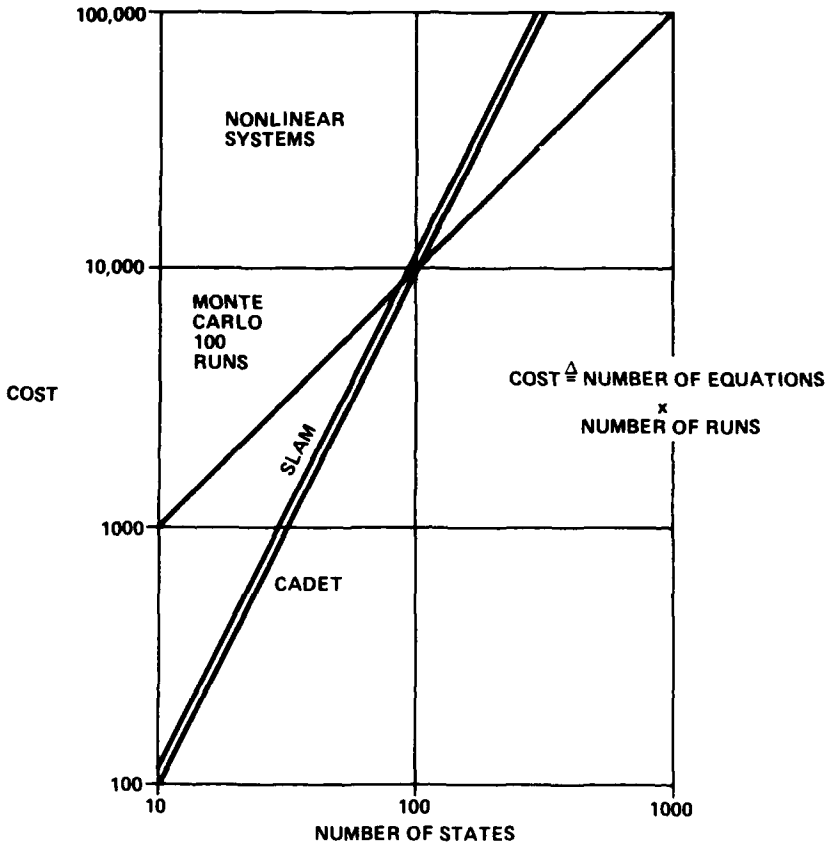

Figure 18. Cost Comparison for Nonlinear Systems

12. REFERENCES

1) Nesline, F.W. and Zarchan, P. "Missile Guidance Design Tradeoffs for High Altitude Air Defense," Journal of Guidance, Control, and Dynamics, Vol. 6, No. 3, May-June 1983, pp. 207-212.

2) Nesline, F.W. and Zarchan, P. "A New Look at Classical vs Modern Homing Missile Guidance," Journal of Guidance and Control, Vol. 4, No. 1, Jan-Feb 1981, pp. 78-85.

3) Nesline, F.W. and Zarchan, P. "Robust Instrumentation Configurations for Homing Missile Flight Control," AIAA Guidance and Control Conference, Danvers, Mass, August 1980.

4) Nesline, F.W. and Zarchan, P. "Digital Homing Guidance--Stability vs Performance Tradeoffs," AIAA Guidance and Control Conference, Gatlinburg, Tenn., August 1983.

5) Laning, J.H. and Battin, R.H. Random Processes in Automatic Control, McGraw-Hill Book Company, New York, 1956.

6) Peterson, E.L., Statistical Analysis and Optimization of Systems, John Wiley and Sons, New York, 1961.

7) Derusso, P.M., Roy, R.R., and Close, C.M. State Variables for Engineers, John Wiley and Sons, New York, 1970.

8) Bryson, A.E. and Ho, Y.C. Applied Optimal Control, Blaisdell Publishing Co., Waltham, Mass., 1969.

9) Gelb, A., ed. Applied Optimal Estimation, MIT Press, Cambridge, Mass., 1974.

10) Hammersley, H.M. and Handscomb, D.C. Monte Carlo Methods, Fletcher and Sons Ltd., Great Britain, 1964.

11) Gelb, A. and Warren, R.S. "Direct Statistical Analysis of Nonlinear Systems--CADET," AIAA Journal, Vol. II, May 1973.

12) Booton, R.C. "An Analysis of Nonlinear Control Systems with Random Inputs," Polytechnic Institute of Brooklyn Microwave Research Institute Symposium Series, Vol. 2, Proceedings of the Symposium on Nonlinear Circuit Analysis, 1953, pp. 369-391.

13) Gelb, A. and Vander Velde, W.E. Multiple-Input Describing Functions and Nonlinear Systems Design, McGraw-Hill Book Company, New York, 1968.

14) Price, C.F. and Warren, R.S. "Performance Evaluation of Homing Guidance Laws for Tactical Missiles," The Analytic Sciences Corp. Report No. TR-170-4, Jan. 1973.

15) Zarchan, P. "Complete Statistical Analysis of Nonlinear Missile Guidance Systems--SLAM," AIAA Journal of Guidance and Control, Vol. 2, Jan-Feb 1979, pp. 71-78.

16) Zarchan, P. "Representation of Realistic Evasive Maneuvers by the Use of Shaping Filters," Journal of Guidance and Control, Vol. 2, No. 4, July-August 1979, pp. 290-295.

17) Nesline, F.W. and Zarchan, P. "Line of Sight Reconstruction for Faster Homing Guidance," AIAA Guidance and Control Conference, Gatlinburg, Tenn., August 1983.

18) Abramowitz, M. and Stegun, I.A., eds. Handbook of Mathematical Functions with Formulas, Graphs, and Mathematical Tables, No. 55 in National Bureau of Standards Applied Mathematics Series, U.S. Department of Commerce, Washington, D.C., 1964.

A GENERIC SEEKER SIMULATION FOR THE EVALUATION OF ACTIVE RF GUIDANCE SYSTEMS

Frank T. Campos
Dynetics, Inc.
P. O. Drawer B
Huntsville, Alabama 35814-5050
USA

SUMMARY

This paper describes the essential features of a generic simulation of an active radio frequency (RF) air-to-air missile seeker. The concept of generic simulations is supported by the need for a common test-bed of system models and simulation technology capable of supporting advanced seeker development programs. An extensive library of target, environment, and RF seeker models has been incorporated within a modular program structure featuring a tri-level hierarchy of program control that allows the selective management of program options for specifying the fidelity and functional implementation of models used at the component, subsystem, and system levels. The Generic Seeker Simulation offers considerable flexibility for simulating a broad range of RF seeker configurations and has a significant potential for supporting the evaluation of competitive designs and advanced seeker technologies.

1. INTRODUCTION

The existing U.S. Department of Defense (DoD) acquisition cycle for current technology complex weapon systems generally requires nearly a decade of planning, evaluation, and refinement in order to transform a viable concept into a producible weapon system within the DoD inventory. The "preproduction/deployment" portion of the acquisition cycle includes such activities as: concept feasibility studies, technology assessments, concept evaluation and trade-off studies, initial design and hardware demonstration efforts, advanced system development and testing, and finally, the engineering development aspects. During this time, several competing concepts may be under consideration concurrently and these concepts are subject to changes in technology, design, and implementation. This is especially true prior to the configuration management emphasis associated with the full-scale development (FSD) phase of a program. During FSD the need for evaluation shifts its attention to engineering change proposals which may arise and to demonstrated system readiness in terms of performance and producibility/supportability.

Computer simulation has been demonstrated and accepted as a major resource for weapon system evaluation. It offers a cost and time effective method of analyzing these complex systems at the detailed component, subsystem, and system levels. The flexibility of digital computer simulation, its inherent lack of support requirements, the degree of user control, and the insight provided into complex-interrelated aspects of modern weapon systems operating in realistic tactical environments have strongly promoted the role of computer simulation in virtually all recent weapon development programs. This emphasis on computer simulation has produced a conglomeration of simulation models with varying degrees of commonality. While the need for a common test-bed of target and environment models is apparent for the evaluation of competing concepts, it may also be desirable to provide a uniform framework for the evaluation of related concepts by multiple analysts. Such a framework would serve to minimize the dissimilarities in simulation approaches, fostered by independent simulation developments, that discourage the exchange of modeling information and the correlation of test results.

An equally important problem with computer simulation development is that the time required to develop a model of sufficiently high fidelity is often a significant portion of the allotted evaluation period, especially for the shorter concept development phases of a program. It is not uncommon for model development activities and operational simulations to become available as many of the critical trade-off studies and evaluations are nearing completion. These common problems associated with computer simulation effectiveness in meeting the needs of concept evaluations for weapons systems have motivated the development of "generic" simulations. The generic simulation, by providing an extensive framework of verified models within a clearly defined program structure representative of the general class of weapon system being evaluated, can alleviate the major shortcomings of commonality and simulation development time suffered by less structured simulation approaches.

In FY80 the Air Force Armament Laboratory recognized the need for a generic air-to-air missile seeker simulation capability to support its Validation Phase, Advanced Medium-Range Air-to-Air Missile (AMRAAM) program responsibilities and future Air Force air-to-air seeker technology programs. A two-year contract was initiated with Dynetics, Inc. to formulate a methodology and develop a simulation structure with RF missile seeker representation being the design goal.

The methodology study adopted two primary objectives, namely: 1) the model fidelity must be sufficient to maintain the integrity of simulation results, and 2) the simulation must have the required flexibility to be quickly and easily reconfigured to meet a broad range of simulation needs. Specifically, it was necessary to produce a highly modular format wherein components could be interchanged and/or modified to closely represent the configuration details of interest. Likewise, at the subsystem level, the simulation must be reconfigurable to simulate the diversity in RF seeker design concepts. In order to produce a truly usable simulation, strong emphasis was also placed on user-friendly software (SW) design features and a program construction approach that would cause the simulation to manage only the executable code required to support the simulation run. These additional features are imbedded into a sophisticated executive controller which serves as the user interface SW and is responsible for the simulation flexibility.

From the engineering viewpoint, the modeling approach focused on 1) transient analysis, 2) functional representation, 3) transfer functions, and 4) state variable techniques. This combination of digital modeling techniques provides a sufficient range of options to achieve the desired model fidelity and allowable execution time best suited to user needs. The basic structure of the simulation, as shown in Figure 1, consists of the target/scenario; environment, clutter, and electronic countermeasures (ECM); signal processor; data processor; head control; and missile/guidance models. For each of these major program areas, considerable flexibility is provided the user in specifying the seeker configuration to be simulated.

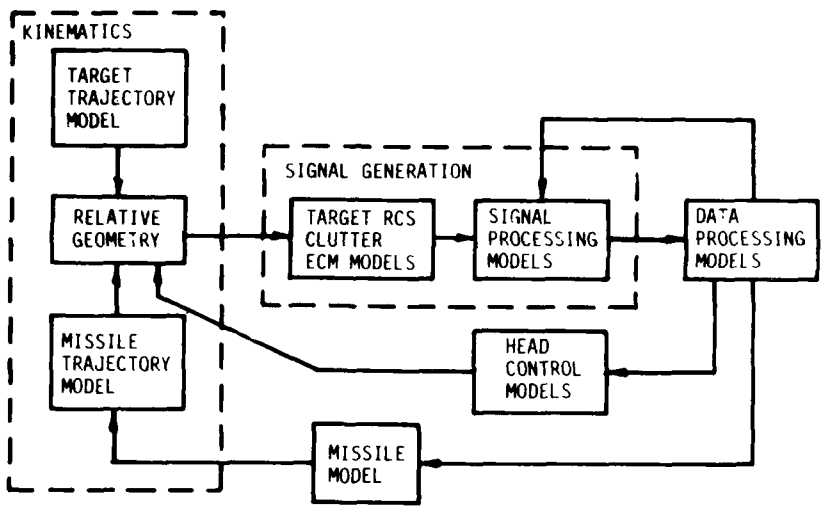

Figure 1. Simplified Block Diagram

In FY83 Dynetics, Inc. contracted with the Air Force Armament Laboratory to perform a four-phase technical program directed at continuing the development of the generic air-to-air missile seeker simulation. The first two phases of this effort have been successfully completed and entailed extensive simulation upgrades to accommodate additional operational modes and capabilities. More importantly, during the second program phase a fully operational pulse-to-pulse model of a passive RF seeker was integrated within the existing framework of the active RF seeker simulation and interfaces established to simulate active/passive multimode guidance. Current program activities are directed toward upgrading environmental models for both the active and passive seeker simulations, and toward simulating a multitarget environment. During program phase four the missile models will be upgraded with additional guidance laws and a six-degree-of-freedom (6-DOF) airframe model.

This paper presents a overview of the generic air-to-air missile simulation to include descriptions of the program structure and the user operation and control features. The simulation description given in the following section pertains only to

those active seeker models completed during the first program phase. However, the explanations of program structure and user control in Sections 3 and 4 are applicable to all simulation development, up to and including the current program phase, and will remain the foundation for the continued development of the generic air-to-air missile seeker simulation.

2. SIMULATION DESCRIPTION

The Generic Seeker Simulation is a closed-loop, time-based simulation of an air-to-air missile featuring an active RF guidance system. The simulation is capable of performing simulated engagements against a single target through both inertial midcourse guidance and active RF terminal guidance phases. The general class of active RF seekers modeled is that of a two- or three-channel monopulse radar capable of tracking the target in range, angle, and Doppler. Target search, acquisition, and track may be performed by the active seeker against a maneuvering target in a simulated environment containing ground clutter and ECM. The capability also exists for the seeker to perform home-on-jam (HOJ) tracking against a self-screening jammer. The simulation has been designed such that the user may implement a variety of active seeker configurations and specify the sequence and transition criteria of the seeker operational modes. Five different operational modes pertaining to active seeker operation are currently modeled:

MODE #	MODE
1	Inertial Guidance
2	Active Search and Acquisition
3	Active Track
4	HOJ
5	Active Reacquisition

During the inertial guidance mode, the missile is guided toward a designated target position based on the assumption that target handover information is available from the launch aircraft and that periodic updates to the inertial navigation system (INS) are received via data link. The search and acquisition mode models the portion of the flight when missile guidance is still driven by the INS estimates, but the seeker actively attempts to acquire the target by searching in range, angle, and Doppler. Successful target acquisition results in a transition to the active track mode where missile guidance commands are provided from seeker measurements of closing velocity and line-of-sight (LOS) angular rates. The other modes provide additional capabilities for tracking on ECM signals or for reacquiring the target after dropping track.

The representation of the active RF seeker is segmented into two major areas: receiver/signal processor and data processing. The general receiver configuration is that of a three-channel monopulse, pulsed-Doppler radar using range gating and Doppler filtering. Signal voltages are modeled at the output of the receiver/signal processor; the signal representation consists of a range/Doppler matrix where each cell of the matrix contains a discrete value representative of the signal voltage received over the Doppler filter bandwidth for a given range gate. Signal voltages are obtained from samples in time and frequency over the radar ambiguity surface of a rectangular, pulsed waveform; the peak value of the ambiguity function is determined by a signal-to-noise calculation derived from the radar range equation. Models of the seeker antenna gain patterns, target radar cross section (RCS), and system losses contribute to the calculation of the signal representation. Signal contributions due to ground clutter reflections and ECM are also modeled.

The seeker data procesor models perform the primary functions of:

1. Thresholding and detection,
2. Measurement computation,
3. Smoothing and estimation,
4. Command generation (tracking and guidance), and
5. Operational mode control.

Seeker data processing functions are coordinated by mode-dependent radar controller routines that establish the sequence of operations, process track control logic, and determine seeker mode of operation. A significant feature of the data processor structure is that considerable flexibility is provided in specifying the sequence of operational modes and the associated transition criteria without having to alter any of the radar controller routines. Transitions between operational modes are effected by a mode-controller routine accessed from each radar controller prior to ending execution for a given processing dwell. The use of the mode-control routine centralizes all decision activity to a single location and makes uniform the decision criteria, allowing operational transitions to be decided during the course of a simulation run based on the status of the seeker tracking functions.

Models of varying fidelity are also available for simulating the response of the seeker head control system, the most complex of which is a dynamical model of the stability loop allowing user specification of values for torquer and rate sensor bandwidths, spring constant, and viscous and Coulomb friction. The missile model is

currently a 3-DOF, point-mass functional representation of the missile actuator, autopilot, and guidance functions utilizing a proportional navigation guidance law.

3. PROGRAM STRUCTURE

The overall structure of the Generic Seeker Simulation was selected to represent the general sequence of operations performed by an integrated missile and seeker system and corresponds to the simplified block diagram of Figure 1. For each of the major program areas indicated in Figure 1 there exists an executive controller routine responsible for coordinating the program calls for that area. The system kinematics are updated at the missile guidance rate, providing relative target and missile position and velocity information. The signal processing executive controller generates the program calls to subordinate routines to simulate the output of the receiver/signal processor for the given update. Signal processor outputs are operated upon by the data processing routines, under control of the data processor executive controller, to generate tracking and guidance updates for input to the head control and missile models. The missile guidance rate for the simulation is determined by the seeker dwell time where the dwell time is defined as the sum of the signal processing time and data processing time required to generate a single guidance update. Signal processing time is determined by parameters of signal integration and Doppler resolution specified by the user; data processing time is also a user specification.

Configurational flexibility in structuring and operating the simulation is provided with three distinct mechanisms:

1. Executive Control,
2. Option Selection, and
3. Specification Definition,

corresponding to the configurational hierarchy illustrated in Figure 2. These mechanisms allow the user to completely specify a system configuration ranging from the determination of operational sequences to the assignment of specific values for critical model parameters.

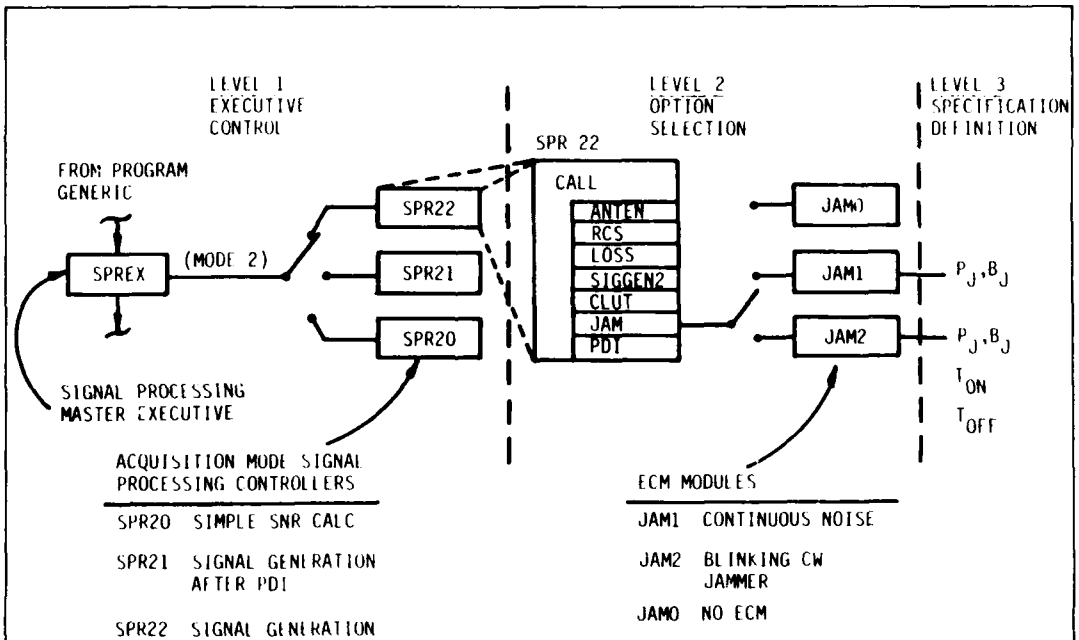

Figure 2. Configuration Control Hierarchy

The executive control mechanism provides the highest level of configurational control for the Generic Seeker Simulation (where configuration control in this context refers to the mechanisms by which the user may configure the simulation to resemble a specific seeker/missile system). Executive control pertains to the selection of executive controller routines which perform series of program calls to subordinate routines according to a desired seeker configuration. Configurational differences that distinguish the executive control routines are typically in the level of fidelity

desired in modeling a particular program area or in mode-dependent functions. In the example of Figure 2, an acquisition mode signal processing controller (SPR22) has been selected to perform the generation of the received signals prior to post-detection integration (PDI). Subroutine SPR22 generates the program calls to other routines that model the seeker antenna pattern, target cross section, and system losses prior to building the signal representation. Subsequent program calls add signal contributions of ground clutter and ECM and model the PDI processing. For acquisition mode signal processing, optional signal processing controllers (SPR20, SPR21) may be substituted for SPR22 to model the signal generation with varying degrees of fidelity. These additional controllers may utilize some or all of the subordinate routines used by SPR22 as long as the interface requirements of the subordinate routines are satisfied by the operational sequence. In general, executive control routines for a given area (i.e., signal processing, data processing) may share a common menu of subordinate routines available to that area; for example, all active guidance data processing routines will use the same set of tracking and guidance filter routines.

The signal processing master executive routine (SPREX) shown in Figure 2 illustrates another significant feature of the executive control mechanism for the Generic Seeker Simulation. The master executive is used during the course of a simulation run to make program calls to the appropriate executive controller routine based on the system operational mode. This feature is particularly useful for modeling the seeker data processor where the data processor configuration may change drastically as a function of the seeker operational mode (i.e., search/acquisition, track, HOJ). The data processing executive control routines, referred to as radar controllers, are comprised of sequences of program calls to data processing routines that may generate logical decisions that influence the path of execution within the data processor. The radar controllers, additionally, are responsible for determining the seeker operational mode based on the transition criteria and operational sequence specified by the user. Although the available radar controller routines have been designed to be broadly representative of the current generation of air-to-air seeker data processors, the modular structure allows specific reconfiguration of the data processor functions and logic through the substitution of an existing radar controller with a user-developed routine. At present, most of the configurational flexiblity at the executive control level is provided by the signal generation and data processing executive routines; however, the head control and missile executive controllers are similarly structured to accommodate future growth in these areas.

The second level of the configurational hierarchy shown in Figure 2 provides the greatest amount of configurational flexiblity to the user through program options that allow the substitution of routines of similar function. These routines, referred to as modules because of their modular construction, are the most fundamental program unit of the simulation and are interchangeable without modification to the module interface. Several modules are associated with each program option; interchangeable modules of a particular function maintain an identical interface with respect to other modules within the simulation, although the modules may differ substantially in the level of fidelity with which a given function is modeled, in functional implementation, or in the external input/output (I/O) requirements. Modules are designed to correspond to specific functional units for which the operational sequence is determined by the executive controller routines. The modular program structure and well-documented module interfaces provide the flexibility to accommodate user-developed routines that satisfy the module interface requirements. The operational software of the simulation has been designed so that user-developed program options may be implemented without extensive integration procedures. The particular program option to be implemented is selected by the user prior to the run and remains fixed for that run.

Approximately 35 program options are available in the current version of the Generic Seeker Simulation, providing a wide range of model features and capabilities. The differences between replaceable modules for a given program option may lie in the level of fidelity with which the function is modeled, in the actual implementation of that function, or some combination of both. In the example of Figure 2 the selection of the ECM option is a choice of functional implementation between continuous noise and blinking jammer models, with an additional option for not modeling any ECM. The other program calls generated by SPR22 are also to program modules for which various options are available. In the case of the target cross-section option (RCS), the selection is between modules of different fidelity; the simplest option, RCS1, models the RCS as a simple point scatterer. The more complex RCS option models the target as a collection of ten point scatterers, the amplitude and relative phasing of which are aspect dependent in order to more accurately model the effects of target scintillation. The program control features of the simulation allow independent selection of each of the program options, so that a particular area of interest may be modeled in greater detail than other areas of less significance to the user. The substitution of modules of varying functional implementation permits functional evaluations of specific algorithms or hardware designs to be performed within the common framework of the generic simulation test-bed. A partial list of the available program options for the signal processing and data processing program areas, and the associated modules for each, are given in Figures 3 and 4.

The final level of configurational flexibility is provided to the user through the specification of parameters unique to a particular function or program option. These specifications allow the user to configure the simulation to resemble a specific seeker design, and to perform parametric evaluations of a given function in relation to

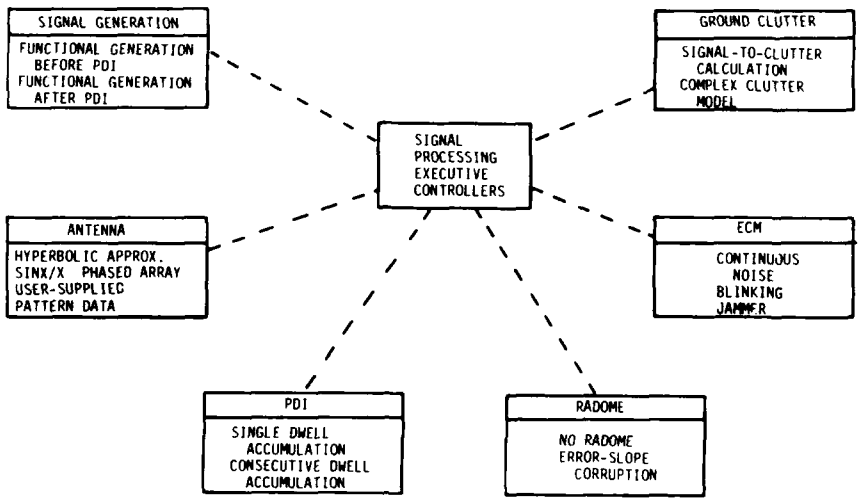

Figure 3. Signal Processor Options

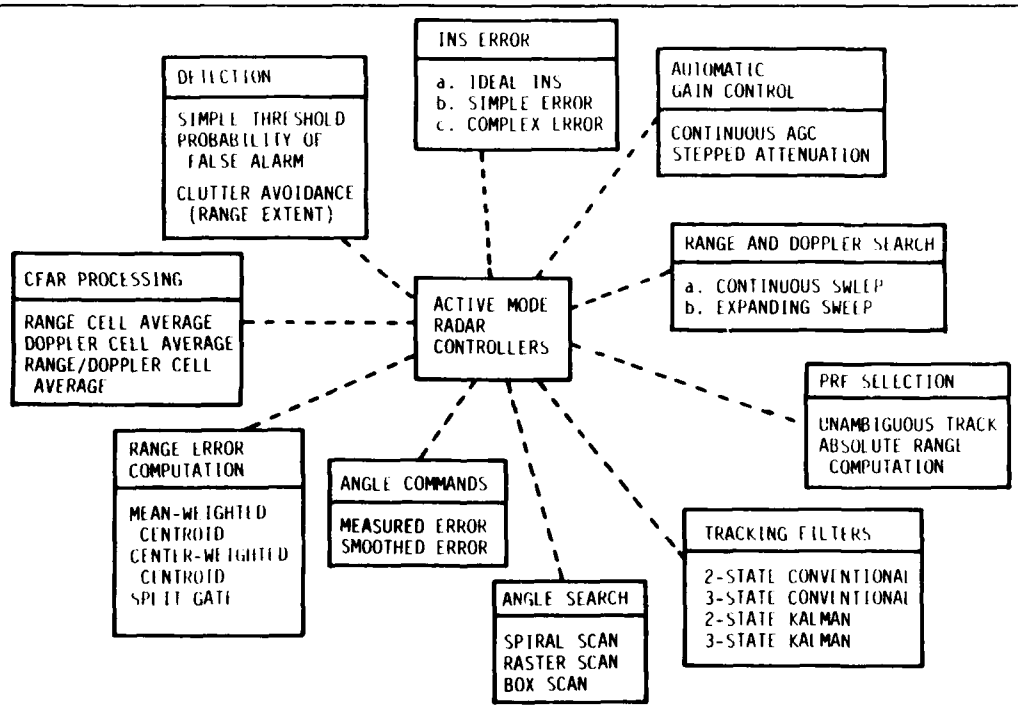

Figure 4. Data Processor Options

the entire system. In the example of Figure 2 both the continuous noise and blinking jammer modules share the common specifications of jammer power and bandwidth (P_J, B_J), though only the blinking jammer requires the specification of jammer turn-on and turn-off times (Ton, Toff). Some other examples of typical specifications are transmitter power, antenna gain and beamwidth, search rates, detection thresholds, and tracking filter constants. Over 350 different specifications are available in the current Generic Seeker Simulation.

The tri-level configurational hierarchy (executive control, option selection, and specification definition) provides extensive flexibility to the user for simulating a broad range of seeker configurations in a variety of environments. Given the existing framework of available executive control and modular options, the user is capable of determining operational sequences, subsystem functions, and system parameters to construct a simulation configuration representative of specific hardware/software designs. More importantly, the well-defined program structure provides an extensive framework for accommodating user-developed options and for supporting simulation upgrades as future modeling requirements are discerned.

4. USER OPERATION AND CONTROL

The Generic Seeker Simulation, written in FORTRAN V, exists as an UPDATE file on a Cyber 176. The use of the UPDATE utility allows for the nonpermanent reconfiguration of the simulation from an auxiliary file of UPDATE directives that provide for the insertion or deletion of lines of program code. Input specification parameters for the simulation are all confined to a single routine which contains statements of equality defining the default values for each specification. Manual operation of the program is possible by creating a file of UPDATE directives to replace the default values with user-specified values for the parameters of interest. A similar utility allows modular options to be exercised by replacing the program call to the default option with a program call to another routine. The use of both utilities provides the complete configurational flexibility necessary to run the simulation.

A major objective of the generic modeling program was to develop a simulation that could be quickly reconfigured to represent specific seeker designs. The need for rapid and easily executable program reconfigurations, coupled with the benefits of short data turnaround times for near real-time data analysis of the simulation results, would indicate that a program implementation centered around interactive construction of the simulation configuration and subsequent interactive program operation would optimize the simulation utility. However, the current limitations on computer central memory for interactive programs, given the size and complexity of the Generic Seeker Simulation, would prohibit interactive operation of the simulation for all but the simplest of system configurations. This limitation restricts operation of the simulation to batch processing on the Cyber 176. With 42 different option parameters and over 350 specification parameters available for modification, the input data requirements for running the Generic Seeker Simulation would be strenuous and time-consuming without a special input data management utility. To facilitate operation of the Generic Seeker Simulation, a separate computer program, the Generic Interactive Executive Program (GIEP), was developed to help construct the input data file that determines the program configuration for a given run. The GIEP provides the advantages of interactive construction of the program configuration while minimizing user effort in preparing the simulation for batch processing.

The GIEP is an interactive program that allows the user to edit an input file containing all of the default values for specifying the system configuration, make changes where desired, and then construct a file containing the job control logic and input data for executing the simulation. The program structure for the GIEP is shown in Figure 5. Upon entering the main body of the GIEP, an input file, referred to as a default file, is read in by the program for initialization. The default file is a specially formatted data file containing default values completely defining all of the configuration control parameters (executive control, program option, and specifications) for the Generic Seeker Simulation.

After the program is initialized, the GIEP prompts the user to choose one of five subprogram areas. Within each subprogram area the user may exercise commands to change (C) or view (V) the values of specific parameters, or to return (R) to the main body of the program. Within the option selection and specification definition subprogram areas, the parameters are organized into groups of no more than 20 parameters of similar function to facilitate the editing of those values. Special commands also exist to change or view all of the parameters in a single group without the user having to input each parameter name. Within the output/plot control area, the user may select the specific printed outputs desired for the given run from a menu of output variables, and may specify that a data tape of all available outputs be created for subsequent use by a plotting program. The control card definition subprogram allows the user to specify the job control card for executing the simulation and to specify the names and locations of user-provided auxiliary files to be accessed by the simulation.

After changing the desired configuration, output, and job control parameters, the user is given the option, upon terminating the program, to create a new default file incorporating the changes just entered. The new default file (NEWDEF) may be

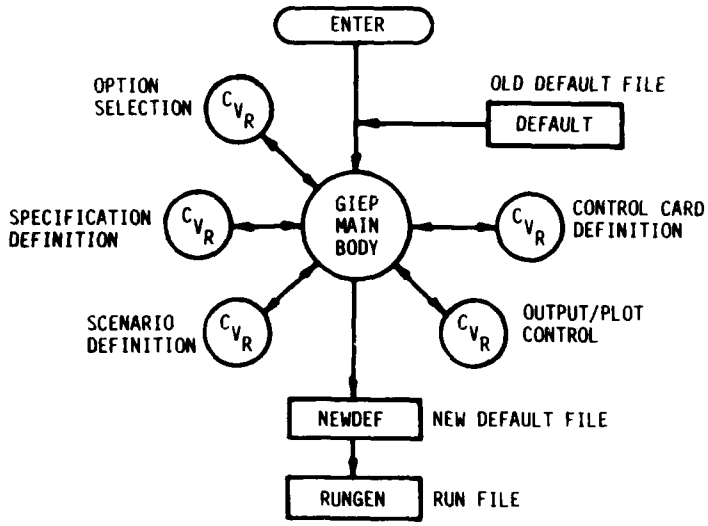

Figure 5. Generic Interactive Executive Program Structure

permanently stored and used as the input file for subsequent executions of the GIEP. Termination of the GIEP results in the creation of a run file (RUNGEN) containing the job control logic and input data file for executing the Generic Seeker Simulation. Execution of the simulation is performed as a batch job on the Cyber 176. As shown in Figure 6, program execution causes any user input files to be incorporated into an UPDATE of the simulation program library containing all of the program routines. Only those routines required for the particular program configuration are loaded for execution in the Cyber 176. A significant difference between the manual program operation and operation by the GIEP is that, when executed from the GIEP, specification parameters are not entered by UPDATE directives but by reading the input data file constructed by the GIEP; this data file is virtually the same as the default file. The output data for a program run will include a complete listing of the values for all option and specification parameters.

Although the complete specification of a new seeker configuration is an involved process requiring careful thought and a basic familiarity with the Generic Seeker Simulation, the process is greatly simplified by the GIEP which automatically generates the input file in proper format. The GIEP provides its greatest value, however, in the day-to-day operations of the Generic Seeker Simulation. Baseline seeker configurations, once established, may be stored permanently and used as test-beds for parametric evaluations and design analyses of specific options. Experience has shown that, with reasonable familiarity with the Generic Seeker Simulation, several configuration parameters may be changed and a new batch job prepared for input to the Cyber 176 in less than one minute.

5. CONCLUSION

The Generic Seeker Simulation is a highly structured simulation of an integrated RF seeker/missile system capable of modeling to varying degrees of detail the engagement of an airborne target by an air-to-air missile. The simulation features an extensive menu of program options representative of the current generation of air-to-air missile/seeker technologies integrated within a program structure designed to accommodate user-developed options and facilitate continued simulation development. The program options are selectable from a sizeable library of verified models of target, environment, and RF seeker components and subsystems. The configuration of the simulation may be specified at three distinct levels of program control that allow the selective management of the various program options to emphasize areas of particular importance. The modular program structure, coupled with the ease of operation supplied by the GIEP, provides an inherent flexibility to support a broad range of simulation requirements from the design analysis of component functions to system and subsystem level evaluations of seeker performance.

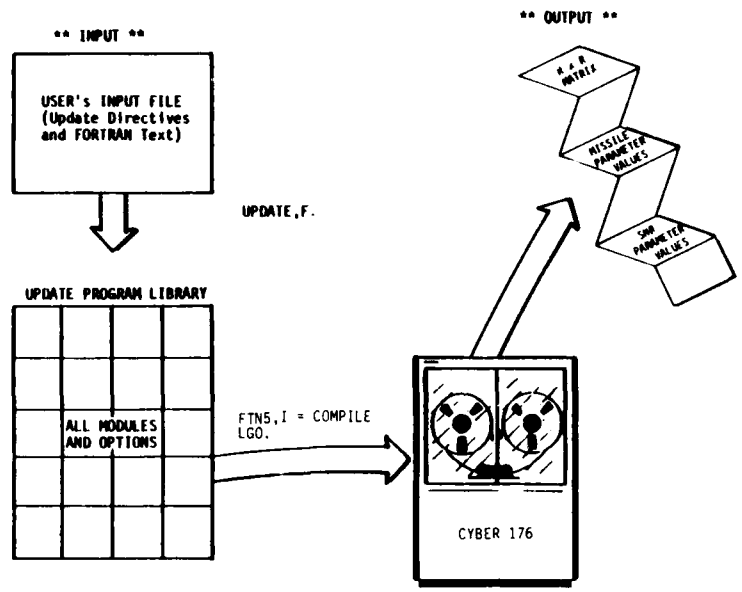

Figure 6. Run Procedure

The Generic Seeker Simulation is a powerful resource for weapons system evaluation providing not only a common test-bed of target and environmental models for the evaluation of competing concepts, but providing as well a uniform, well-established framework from which new design configurations may be modeled. The existence of the Generic Seeker Simulation test-bed significantly reduces the amount of time required to develop a detailed simulation of a candidate seeker system and provides a common baseline from which competing systems may be evaluated.

6. ACKNOWLEDGEMENTS

The work described within this paper was performed under Contract F08635-83-C-0123.

The author would like to express his appreciation to his many colleagues who have substantially contributed to the success of the generic modeling program, and in particular, Mr. Kenneth Meck who has been responsible for the development of the Generic Interactive Executive Program.

DIGITAL SIMULATION TECHNIQUES FOR END GAME PHENOMENA

Martin E. Tanenhaus
Manager, Advanced Systems
Control Systems Operation

Duane J. Cart
Senior Scientific Programmer/Analyst

MAGNAVOX ELECTRONIC SYSTEMS COMPANY
1313 Production Road
Fort Wayne, IN 46808
USA

This report is based on efforts to develop a color graphics based analytical methodology for determining end game performance of smart sensors on missiles and projectiles. These sensor systems defend against present and future target threats. This paper reports on the development of a computer based methodology to define and test weapon system sensor performance requirements, predict end game sensor and fuze burst point distributions, assess weapon system effectiveness, and evaluate advanced weapons design concepts.

A graphics driven target modeling methodology is presented, together with verification, correlation, and validation techniques. A complex radar target model with detailed graphics, radar cross section (RCS), glint, imagery analysis, and target doppler signature output has been developed.

A sensor system signal processor model is developed and exercised with the target model to provide system performance assessments. Verifiable correlation between system model performance and real hardware has been obtained. End game system function results are utilized in a weapons effectiveness simulation and appraisal.

This paper reports on the development of a computer methodology to define and test weapon system performance requirements. This methodology helps to predict end game sensor and fuze burst point distributions, assess weapon system effectiveness, and evaluate advanced weapons design concepts. Both analysis and synthesis operations are available to answer key "what if" questions in order to completely characterize the sensor system. The focus of the system modeling is (1) the sensor signal returns, including environmental effects, and (2) the signal processor system which operates on this sensor return signature.

The key role of the analysis operation is to characterize the sensor's outputs and define a signal processing scheme by breaking it down into definable subsystems and sub-elements. The essential contribution of the synthesis technique is to combine each component or subsystem into a complete sensor and signal processing system model. The ability to break down the system into understandable elements and put it together to characterize system performance not only greatly enhances the understanding of the overall system - threat encounter scenario, but also provides essential verification of the system simulation that will provide performance assessments. Included in the methodology is the ability to compare the resulting synthesized system against data from the operation of the corresponding actual system to assess system performance in a verifiable way.

This methodology allows the system analyst to easily manage the multidisciplinary simulation process that provides a wide range of capabilities to develop, verify, and validate models and systems. Based on several advanced simulation packages, input and output color graphics, an optional data base management system, and an interactive command language, the user can quickly adapt his modeling approach to the requirements of a particular application. The ability to easily manage a complex simulation process provides the analyst with time to concentrate on the phenomena to be modeled and minimizes time spent on computer data management tasks.

Specifically, this analytical methodology determines RF sensor response to complex radar targets. A simulated target backscatter signature is developed that is based on specific threat weapon platform encounter parameters. This signature drives a model of the signal processing implementation. The signal processing algorithms operate on the target signature to initiate the appropriate firing decision based on its associated burst point. A pictorial computer graphics drawing of a scaled model of the target, with simulated fragmentation damage and burst point is displayed. A complete flow design description of the methodology is found in Figure 1.

One result of this effort is the creation of a computer tool kit that displays the complex nature of radar target backscatter from several viewpoints. The radar viewpoint of the radar cross section (RCS), glint, and target imagery reflects a far field static picture of the target engagement problem. The smart sensor viewpoint of the doppler signatures, backscatter profile, and RCS reflects a picture of target-sensor closing engagement dynamics. This understanding is synergistically applied to predict and

answer questions concerning the interaction of smart sensors and complex targets. A direct link has been established between the high resolution radar imagery analysis used by the radar community and the backscatter analysis used by the smart sensor community to characterize doppler signatures.

The central core of this work is a set of individually powerful simulation tools integrated to provide a comprehensive system simulation (see Figure 2). The tasks of modeling complex signal processing systems; verifying system and subsystem performance; testing systems in dynamic situations representative of weapon platform end game encounters; and evaluating system effectiveness are typical capabilities. The use of interactive graphics to display results in two and three dimensions; transient, optimization, and Monte Carlo analysis to investigate alternate approaches; and Fast Fourier transform (FFT) analysis are features included in the modeling tool package. A macro oriented systems modeling technique is emphasized for describing a conceptual design using elements and macro-models; these elements and models directly correlate with the elements of a system design block diagram. System model making flexibility and results oriented graphics techniques permit the user to easily adapt the methodology to his specific needs. Smart Munition Effectiveness Assessments are displayed graphically in 3-D in contrasting colors, and include the target skin, the vulnerable components, and the damaging fragments. The burst point locations are fed into a typical Probability of Kill (Pk) program to calculate system effectiveness. The 3-D interactive color display allows the user to visualize the end game from different viewpoints.

OVERVIEW - TARGET MODELING

A graphics driven target modeling methodology is presented together with verification, correlation, and validation techniques (see Figure 3). A complex radar target model with detailed graphics, radar cross section (RCS), glint, imagery analysis, and target doppler signature has been developed. The use of a target visual descriptor program displayed in 3-D graphics (with optional hidden lines) provides a comprehensive target model that is: (1) converted directly to a radar target model to generate RCS and glint; (2) converted to high resolution target imagery; (3) converted to doppler signatures; and (4) converted to a backscatter profile display of key scatterers. The analysis performed on the target models and on actual target data verifies model realism. These radar models are then used to generate smart sensor signatures to evaluate signal processing schemes.

OVERVIEW - SYSTEM MODELING AND SIMULATION

This paper also describes a system simulation technique which allows macromodel elements to be combined together to easily describe a complex system that may be tested for accuracy with reality. Various levels of simulation complexity and model abstraction that still relate directly to bench reality are discussed. This methodology contains a combination of simulation, analysis, and validation software tools with interactive user control and graphic displays (see Figure 4).

A conversational user interface (Figure 5), with its interactive command language, processes user requests and invokes the appropriate batch or interactive operation. The user may select submodel analysis and validation efforts as interactive processes, and CPU intensive system analysis as batch oriented tasks. The interactive viewing of graphics is also an option of the batch oriented technique. The simulation process to be controlled includes: (1) the simulation language (NET-2) with complex system macromodeling; (2) a complete data analysis and waveform processing package (MR WISARD); (3) a standard interface for user-written Fortran Simulation routines; (4) standard graphic routines for general graphic output of user selected data.

The user-friendly interface (Figure 5) permits the user to describe, analyze, and validate his system simulation while remaining flexible enough to adapt to his changing needs. This implementation minimizes the interface between the user and the data and file management, including manipulation, creation, construction, naming, cataloging, and disposition of files which must take place transparently.

An essential requirement is the interactive control of graphic output of data. Graphic system output should be built in automatically, depending only on the user's requests, freeing him from the necessity of using a graphic language In this simulation effort, significant benefits have been experienced by relying heavily on graphics, particularly in the areas of signal and spectral analysis and signature recognition and classification.

The modeling tools allow progressively more abstract models to be described and utilized. The user may begin with detailed component-by-component models and progress to subsystem macromodels that still relate directly to bench testing. Each macromodel contains nodes that can be probed (much like an engineer's oscilloscope or spectrum analyzer) to validate his model. Further abstractions of macromodels, utilizing mathematical algorithms and written in the same language, can be used to describe a total system. These device independent abstract models can be utilized to model a conceptual system quite independent of any hardware or firmware considerations. This system utilizes combinations of macromodels and abstract models to build an approximation of reality. For added flexibility a macro-model may contain a combination of circuit elements, system elements and mathematical abstractions all in the same model. The modeling of mathematical abstractions has become increasingly relevant since they frequently can be readily implemented in a microprocessor application (see Figure

6). They also frequently correlate more closely with the firmware implementation than does a typical system element block diagram model.

The chief system simulation goal is to preserve the accuracy of each submodel description and build an accurate realistic description of the overall system. As the goals of each simulation model are broadened, the descriptions of each model increase in complexity to yield more knowledge about the system. Macromodel goals also must include the development of model accuracy which needs to correlate with hardware and bench measurements in order to establish the model's credibility. Secondary efforts are dedicated to the development of increasingly abstract models for CPU intensive systems applications, in order to reduce CPU requirements while preserving model integrity. Finally, simulation and analysis of system performance demand efficient execution times. This is especially true for the evaluation of stochastic systems using Monte Carlo analysis techniques.

System performance may be assessed; alternative designs of potential system solutions may be described and evaluated; key "what if" questions answered - all with one set of software tools deemed a System Simulation Methodology, the results of which produce new solutions to critical problems utilizing tomorrow's technology.

LMS filter models, sophisticated third order phase-lock loop (PLL) models, and frequency selective Discrete Fourier Transform (DTF) models have been compared with breadboard models (using analog, digital and microprocessor implementations) with excellent results. Complete signal processing systems consisting of signal generators, adaptive filters, and adaptive PLL's have been simulated. Correlated and validated data has been collected by implementing the same system (signal generator, LMS filter, PLL, etc.) in microprocessor chips.

OVERVIEW - SYSTEM EVALUATION AND PERFORMANCE ASSESSMENT

The task required in analysis is to predict and evaluate system performance by examining various signals and parameters utilizing the simulation process with simulated real-world environmental signals for inputs (Figure 3). Using MR WISARD, the technique of pre and post processing of data may extract additional information from the system model (Figure 7). The analysis techniques simplify the incoming data for evaluation by displaying information graphically. This is an inherent capability of the analysis package. Once the data is input, graphic output may be accomplished by the simple command "PLOT" to the analysis package.

Analytical requirements dictate examination and modification of data in several ways. The signals of interest may be processed and examined using Fast-Fourier transforms (or inverse FFTs) for both frequency and time domain analysis. This also readily permits signal processing and modeling in the frequency domain. These signals and spectra are automatically retained for later viewing with a 2 or 3 dimensional graphic display.

Frequently the user will need to compare the spectra of two signals. For example, a reference signal must be compared to one degraded by undesired noise components and interfering signals. For this task, cross-spectra and correlation capability using graphics output are available.

The validation of the signal processor model and the simulation methodology is essential. The question of model accuracy (how realistic are the models?) must be considered before the simulation results can be relied upon. A critical requirement is the correlation of simulation results with expected results; this should be extended to implicitly require a high level of accuracy in the expected results. This may be accomplished by utilizing the results from known test cases for model and simulation validation. Validation of a macromodel will require the user's judgement and definition of required system design performance. Known environmental effects on the system design also must be considered. Validation efforts must continue in every step of system development, and are the key to modeling success. The model and data must correlate with prototypes of the design as soon as they are available. The model will inevitably have to be adjusted for optimum correlation with the hardware. It is imperative to continue this correlation continuously while refining model and hardware. The macromodels must continue to accurately represent hardware and firmware. Frequently, new models will be required to match variations of the different hardware configurations.

Since the analytical methodology provides graphic data representation, these graphics may be correlated with those from an oscilloscope or spectrum analyzer. The user must bridge the gap between simulation and hardware; this is a technique that must be developed - from the ideal to the theoretical to the real world. This requires that the tasks of hardware and firmware design and system simulation be closely coordinated as a team effort.

The designer may have alternative design solutions in mind. By modeling these various system designs, the designer can evaluate the various possible approaches. This is an essential benefit of simulation: weighing alternatives at every step in the design process (Figure 8). It will even assist in cost, performance, and component selection considerations in preparation for the manufacturing phase.

A particularly difficult time for the designer is the situation where he is required to make the commitment to a specific hardware or firmware design. If effective simulation techniques have been followed, he will be in a good position to make that decision. Once that inevitable commitment is made and implemented, the designer must follow through and model the actual prototype.

System performance assessment includes the generation of the distribution of system trigger points for unique target engagement conditions. The results may be displayed as depicted in Figure 9. The distributed trigger points for X, Y, and Z with respect to the aimpoint coordinates and the encounter conditions are recorded. This figure displays the trigger point performance of a simple proximity fuze tested against a complex target for one trajectory. Many computer runs are required to generate the trigger point distribution performance for this system. This procedure is illustrated in Figure 10.

The system performance coordinates can now be used to position the warhead at the analytically determined burst point using the target effectiveness analysis (Pk) package. This will provide the fragmentation and resulting damage (Pk) for each target identified and each scenario exercised.

TARGET MODELING TECHNIQUES

The task of target model simulation is broken into many subtasks. Initially, the development of the radar target model begins with the creation of (1) a visual target graphic image (Figures 11, 12, 13) made up of geometric shapes; (2) a radar target model (of geometric shapes) where radar cross section (RCS) and y and z glint orthogonal to line of sight vector (Figures 14, 15, 16) are calculated; and (3) a simulated target signature (of geometric shapes) which contains the instantaneous phase difference of each individual scatterer, antenna polarization, antenna pattern, wavelength, the doppler shift due to each scatterer, the signal strength due to the transmitted power that is reflected from each scatterer, and the shadowing between scatterers. The clutter, noise and ECM signals may be added to this signature to represent realistic field conditions.

This target signature is used to drive the model of the post-detection receiver signal processing system. A realistic simulated encounter provides firing decisions for a wide variety of threats. This firing decision can be correlated with the relative position of the warhead to calculate effectiveness (Pk).

This overall simulation methodology takes known information about the precise target, the encounter parameters, the encounter geometry, the antenna and target geometries, the transmitter/receiver and signal processor and provides graphic analytical data of the predicted results of the encounter along with detailed, graphic analysis of each phase of the simulation. During the process of simulation, analysis, and verification, the models will be updated to continually provide accurate representations of reality.

A more detailed description of the development and verification of target models will provide clarification of how these tasks are accomplished. For example, the visual graphic target of Figure 12 is converted to a radar model of 52 geometric shapes. The radar model data file is now of a form that can be utilized in the radar equations for each of the respective quadric shapes.

TARGET CHARACTERISTICS: CROSS SECTION AND GLINT

In order to generate the required RCS and glint graphically as a function of aspect, it is necessary to define the physical and radar parameters required. The graphic analytical results (RCS and glint) are seen in Figures 14-16; Figure 14 represents the RCS as a function of a -10 to +190 degree rotation of the aspect. Figures 15 and 16 represent the corresponding simulated y and z axis (target coordinate system - orthogonal to the Line of Sight) glint respectively. This task must be repeated as shapes are added until the model is complete, and continued as the model is refined until the desired accuracy of the RCS and glint is obtained. Until this point, the model may not be used analytically except as described above. Once this is accomplished, a validated radar model of the target exists. The validated target radar model (Figure 12) is now available for analytical tasks.

SAR IMAGING

The task of processing target doppler signatures and determining the burst point, while minimizing or eliminating false alarms, makes it desirable to characterize the radar image of a target and predict the nature of the image or signature that should be expected. The signature changes dramatically with aspect angle. By scanning the target with a narrow beam along a relatively short antenna length and then moving the antenna around the target one antenna length (or rotating the target) and scanning again, a radar image can be obtained. It should be noted that the narrow beam scanning is in an overlapping fashion such that the separate scans will appear as one continuous scan along the hypothetical long antenna (i.e., along the "synthetic aperture"). For our analytical purposes, this can be accomplished by continuously receiving a narrow-beam target reflection while continuously rotating the target at least 180 degrees in aspect (assuming target symmetry). The "reflection" utilized here is the target Radar Cross Section (RCS) as developed previously.

To illustrate this methodology, an extremely simplified target has been selected. To accomplish this, a scatterer is desired that will have the same magnitude of return (RCS) for all aspects; thus eliminating an unwanted variable. Four spheres are aligned in a horizontal plane in a line extending outward from the origin. This "Line" is then rotated about the vertical axis (Z) of rotation to provide the rotating aspect desired. A sketch of this linear arrangement as it rotates is shown in Figure 17. The sphere at the origin should contribute no doppler since it is rotating about its vertical axis of symmetry. The remaining 3 spheres can be seen in the spectra of Figure 18.

This combined spectra (Figure 18) of the "reflection" from all major scatterers will uniquely characterize the radar image of the target and hence will uniquely characterize the target itself. An additional benefit will be the identification of the major scatterers for a given aspect angle, and hence the identification of the precise surfaces of concern in an effort to reduce the radar visibility (or reduce the RCS) of the target. It should be noted that using these analytical methods, the return from a given section of the target can be removed and the identification of the scatterers involved and their contribution to the overall complex spectra can be assessed.

TARGET SIGNATURE SIMULATION AND ANALYSIS

The validated target radar model (Figure 12) is now ready to be implemented in a more complete simulation that would graphically predict the receiver post-detection video signal that could be expected for a given threat engagement. This time varying signal is the simulated radar target "SIGNATURE."

Target backscatter profile analysis uses FFT techniques to display spectra showing the dominant scatterers of the doppler signatures for a given sensor target encounter (Figures 11 and 12). This approach has provided a "measure of goodness" for comparing dynamic target models in RCS terms. The doppler signatures, although broadband, may be analyzed using computer techniques to display RCS and glint interaction for each specific encounter. The first RCS plot (Figure 19) was derived from typical measured doppler data of a full-size missile. Figure 20 is the original doppler data from which the RCS plot was derived. Using the same program, the computer generated doppler signature may be analyzed to produce a plot of its RCS data (Figure 21).

Another presentation of the same dynamic doppler data from the spectral viewpoint produces 3D plots of the multiscatterer profile of the target along the intercept path. This program divides the time-series target signature waveform data into user specified sections, computes the power spectra for each section, and plots each result so that the entire dynamic signature pattern in the frequency domain may be viewed in either two or three dimensions. Figure 22 plots the backscatter profile for the same target at a higher frequency. Figure 23 plots the backscatter profile of the simulated missile target from the data used to plot Figure 21. Plots of this type can be used to determine the number of scatterers on the target, their relative strengths as seen by the RF Source at each period of time, and their origin on the target body.

For the target in Figure 12, typical signatures plotted by MR WISARD for the helicopter and the rotating blades alone is displayed in Figure 25. The multi-spectra request "TDPOW" implicitly invokes multiple FFT transformations of sequential sections of the time domain signal, resulting in a plot of 14 spectra stacked in pseudo 3D fashion. The time domain signal is divided into 14 time sections and each section is FFT transformed and plotted separately. Figure 26 displays the total return spectra (a) and the blade only return spectra (b).

Another technique for investigating relative scatterer contributions has also been developed. This may be considered a "goodness of fit" verification technique. A 3D plot of the ratio of the Fourier transform of each of two signatures for a particular encounter plotted as relative difference versus the frequency and time dimensions allows a comparison of any two real signatures (or one real and one simulated) and reveals the fundamental scatterer characteristics. Both signatures must have the same target coordinate characteristics for the plots to be meaningful. In Figure 24, a simulated target signature is compared with a typical reference sphere signature for the same target intercept conditions, revealing the RCS differences of complex targets alongside the target at a close miss distance.

It can be shown that the target model detail of the backscatter analysis is similar to the target imagery analysis (see Figure 27). For the first time, target model detail may be extracted from either radar target data or sensor doppler signatures. Each picture represents the same level of target detail, i.e., the flipside of the same two-way mirror; both data sets may be expressed in either 2D or 3D graphics.

SIGNAL PROCESSING SIMULATION AND ANALYSIS

Paralleling the development of increasingly complex microelectronic circuits and systems, such as large scale integrated circuits, macromodeling programs have become quite indispensable as design tools. They have helped to speed up design cycles, reduce redesign, and enhance reliability prediction. In modeling a complete electronic circuit design, each integrated circuit or microprocessor based system is represented by a macro model that describes that particular functional system block. Each component is validated separately in its own test simulation. The subsystem functional blocks are combined to describe a complete signal processor. Macromodeling techniques have been used to describe and analyze typical bandpass amplifier receivers for processing doppler

signals as well as to describe and analyze more sophisticated approaches involving bandpass limiters, phase locked loops, and digital frequency discrimination circuits.

In many conventional receiver designs, the signal processor will recognize the received doppler signal when the amplitude and frequency of the doppler return signal are appropriate to trigger a decision circuit. Since the simple radio receiver is basically an amplitude sensitive device, the trigger position depends on target aspect, type of target, distribution of receiver sensitivities, amplifier characteristics, and variations in transmitter sensitivity.

The macro model of the conventional system consists of two operational amplifiers with the same feedback and passive filter components as the real system (Figure 28). An ideal limiter represents the zener diode limiter in the second amplifier stage. The transistor fed from the limiter circuit acts as a saturated diode for positive going pulses above the transistor base voltage and acts as a unity gain inverting amplifier for pulses going negative with respect to the transistor base voltage. A functional model of this full wave rectifier output is filtered in an integrator and fed into a functional model of the SCR decision circuit.

Figure 29 shows conventional receiver performance with a moderate relative velocity and a perpendicular miss distance of 30 feet. The final trigger integrator of the doppler signal is building up a voltage and finally fires at a horizontal distance of 22 feet between receiver and target while the optimum firing point is 33 feet from the target.

Recent advances in microelectronic products for signal processing and computing circuitry have led to the development of quite sophisticated doppler processing techniques. These new processing schemes allow a doppler receiver to "adapt" to varying relative target velocity considerations using computer techniques. These methods provide a more accurate signal frequency discrimination over a wide range of encounter doppler velocities.

One processing technique utilizes the phase locked loop analog voltages directly to achieve frequency discrimination of the input doppler signal. Figure 30 is a diagram of the signal processing building blocks that make up the signal and noise simulation and the doppler frequency signal processor.

The PLL detection technique has been applied to many different electronic processing systems. Simple systems use the acquisition characteristics and the quadrature "lock indicator" technique to indicate whether a signal is present in a noisy environment. In more complex signal processing systems, the PLL may be used at the output of a doppler receiver as a tracking filter. The VCO output may be processed to determine the frequency content of the doppler signal and this may initiate even further processing circuitry.

The bandpass limiter characteristics can be tailored to optimize PLL response in the presence of noise and a large dynamic range of signal amplitude. This circuit has replaced the typical automatic gain control (AGC) amplifier scheme previously used to process signals with a large amplitude dynamic range. The idealized gain elements used may be replaced with operational amplifier macromodels to determine realistic bandpass variations for an analysis of acceptable circuit and system variations. A second-order PLL filter with provisions for additional loop gain is provided for a wide band tracking capability.

This signal processor is part of a large scale doppler receiver system analysis program that compares the capabilities of conventional signal processing techniques with various PLL processors. Macro-modeling techniques can help evaluate velocity dependent trigger position accuracy, noise discrimination, different modulation techniques, transmitter oscillator frequency and sensitivity effects, as well as jamming and other environmental effects on receiver performance.

Recent computer simulation techniques have been applied to model adaptive digital filters such an LMS and Kalman, and also digital PLL tracking types. Quantization errors of A/D functions and digital sampling errors of sample rate dependent microprocessor implementations can be controlled to investigate presently realized filters that use advanced microprocessor devices. A block diagram of the simulation methodology describing the key modules of this signal processor scheme is found in Figure 31 and discussed in the next few paragraphs.

The signal processor simulation contains the processor model with its analog-to-digital converter and sampling limitations, and the waveform analysis of processed data. Various signal processing functions or modules are implemented within this processor model. These include the processor implementation of the Analog to Digital Converter, noise filtering algorithms and the tracking loop model. A digital macromodel of a system executive will interact with various data from each processing function to make appropriate control decisions.

The simulated system will begin with a signal generator simulating realistic test signals to evaluate system response. This simulated signal will then drive a NET-2 program which simulates the hardware implementation of the quantization limiter module. The analysis program (MR WISARD) provides the time and frequency domain graphic analysis of these signals.

QUANTIZATION/LIMITING MODULE

The complex signature, with additive signal and noise, is passed to a quantization/ limiter step, Figure 32. Since frequency and phase information is of interest, limiting is necessary to minimize amplitude sensitivity. Quantizations may be performed on separate signatures to test the effects of sampling on the signal, noise, and noisy signal separately. Since testing with partial signals usually is not realistic in hardware, simulation provides the user with this additional analytical tool. This module runs at a higher rate than other modules in the simulation execution. Various modules within the simulation run at differing sampling rates, allowing them to more closely replicate the operation of the hardware and firmware chosen to implement the optimized signal processor scheme.

ADAPTIVE FILTER

The output of the quantizer is passed to the adaptive filter module (Figure 33). In this example, an LMS IIR digital filter is modeled. The representation of this filter block is shown in Figure 34 and its block diagram in Figure 35.

Various signals encountered in the LMS filter simulation are shown in Figure 36. Figure 36 shows filter operation for a SNR of -20 db using MR WISARD graphics. The filter output (Figure 36 g) exhibits the adaptation process during approximately the first 7 to 8 cycles of the output sinusoid; this rate of adaptation will depend on the accuracy with which the filter coefficients are preset.

PHASE LOCKED LOOP SYSTEM MODULE

The adaptive filter output is passed to the PLL system module, Figure 37. A block diagram of the PLL can be seen in Figure 38. The PLL model (Figure 39) is described using the NET-2 system elements. Two macro-models can be seen in Figure 39. "AVV" describes the third order correction model for the loop.

It will be noted that the loop VCO consists of an integrator element followed by a "SINCOS" element that outputs two signals proportional to the sine and cosine functions of the phase input to serve in quadrature detection and lock indication applications. The lock indicator is included in this model description.

SYSTEM EVALUATION AND PERFORMANCE ASSESSMENT

Once a system model has been thoroughly analyzed in a deterministic fashion, its performance may be studied from a 'stochastic' viewpoint as well. Key contributors in the target noise and clutter models may be assigned distribution patterns based on an analysis of the stochastic nature of these signatures. Also, trajectory characteristics, RF, electronic circuit and system elements may be assigned distribution patterns. A transient Monte Carlo Simulation involving many cases per simulation run and many runs has provided Fuze system performance predictions that could not have been duplicated even with the extensive testing of hardware against full size targets.

The stochastic approach utilizing the Monte Carlo technique proceeds as follows. The target signatures are created for all specified trajectories. The returns from key target scatterers in the model are generated separately from the main target signature and are preserved along with the main target signature. A distribution is assigned to these key scatterers including variations in the target signature (target, noise, clutter, and trajectory variations). For each transient Monte Carlo case, the elements of the target signals are summed at each time interval to calculate the target signature. Also, key elements in the system model representing medium values are assigned distribution functions as well. Utilizing NET-2, the transient Monte Carlo analysis of the system provides an excellent view of system function point performance. The target trajectory profile must correlate with the analysis of system effectiveness.

The evaluation of system effectiveness requires a realistic determination of target vulnerability, and the effectiveness of the weapon system, with realistic estimates of the damage to the target that are to be expected. In order to project the fragmentation damage that would occur to the target, a realistic projection of the impact of fragmentation on various vital components of the target is required. In order to translate the statistics of fragmentation damage into a form readily visualized (graphic representation in 3-D space), the target along with the fragmentation damage to the skin and vital components has been found most effective. This spatial representation of the damaged target must appear as if being viewed through a "window." This visualization technique emphasizes the ability to move the target closer or more distant and to rotate the target to any desired orientation in 3-D space in order to view the actual fragment impact pattern, much like the manual manipulation of a small scale model of the target. This tool has been most effective in visualizing the effectiveness of the overall engagement and the fragmentation damage to the target in particular. For this method, the target is represented using color graphics with different colors emphasizing items of special interest such as the visible hits or fragmentation damage pattern, and possibly the vital internal components also highlighted in a contrasting color. This technique creates an easily visualized sense of reality for the encounter and very effectively aids in an easily visualized assessment of system effectiveness against the target of interest.

This detailed three dimensional target description is the target vulnerability model. The target is described in terms of non-vital components, shielding plates and vital components. These components and plates are positioned in three dimensional space in a cartesian coordinate system about the target. The non-vital components serve to act as shielding plates for vital components. The vital components are those components which are necessary for the success of a particular target function or mission. These components cause a loss of function or mission capability when damaged.

The systems effectiveness analysis generates a 3-D grid of weapon burst points about the target. The model then requires a detailed representation of weapons damage mechanism, be it blast, fragmentation, etc. The weapon is given certain dynamic characteristics such as weapon velocity, fragmentation velocity and angle, etc., and is simulated to burst at each of the system trigger points previously generated. The damage mechanism is traced to a vulnerable area on each vital component and the penetration mechanisms are calculated. The residual damage to each of the vital components is computed and the conditional damage or kill is calculated, based on the density of the fragmentation pattern and the vulnerable areas presented by the vital components.

These statistics are then stored for additional analysis. The program requires as input a vulnerability schematic displaying how the vital components are combined to comprise the particular system function or mission from which system kill probabilities can be calculated. Consequently, the weapon system delivery accuracy and fuzing and other weapons characteristics can be input to the model to generate system scenario kill probabilities.

For example, a warhead's fragmentation characteristics have been described and the trigger point and engagement encounters have been specified (Figure 40). The fragmentation hits are displayed graphically as enlarged squares on the target model. Under the target skin, component vulnerability criterion has been established and a listing of component damage is generated.

CONCLUSION

This system simulation methodology provides a wide range of capabilities for the development, verification and validation of models and future systems. These user friendly tools uniquely combine flexibility and ease of implementation to develop engineering solutions. The tools allow the user to quickly adapt his or her modeling tasks and techniques to the requirements of each application.

This report highlighted a discussion of the analytical approach and unique color graphics computer tools that assisted in the analysis, characterization, and simulation of complex target signal returns for short range radar sensors. The insight developed by the use of these techniques helped develop accurate target models which have been verified by using data taken against real full-scale and fractional-scale targets.

The ability to easily manage the simulation process allows the user time to concentrate on the phenomena to be analyzed and minimizes time spent on computer data and file management tasks. The repertoire of software tools and data displays allows the user flexibility in choosing the best solution. The synergistic effects achievable with this approach to simulation have produced new and effective ways of solving problems not possible with more conventional approaches.

ACKNOWLEDGEMENTS

The authors would like to thank the following individuals for their contributions: D. Culp for her programming effort in the modification and implementation of the key software packages MR WISARD, GENPLOT, SCANPLOT, and CAGES on the IBM 3081 and Tektronix 4100 systems; T. Zielinski for his programming efforts in support of specific model applications; and L. Laudig for his support and encouragement. They would also like to thank the various reviewers for their efforts and helpful suggestions.

REFERENCES

(1) M. E. Tanenhaus, H. Gee, R. C. Fritts, "Signal Processor 'Digitizes' Analog Design Problems," Electronic Design, March 31, 1981, pp. 161-168.

(2) M. E. Tanenhaus, D. L. Gilcrease, "The Automated Manager for the Simulation Process," in Summer Computer Simulation Conference, July 1978, pp. 160-166.

(3) M. E. Tanenhaus, "Complex Target Analysis, Characterization, and Simulation from Short-Range Radar Signatures," NRL Report 8292, NAVAL RESEARCH LABORATORY, Washington, D.C., May 18, 1979.

(4) M. E. Tanenhaus and R. Martin, "Linear Integrated Circuit Models and Applications for Computer-Aided Circuit and Systems Analysis and Design," NAVSURFWPNCEN/WO/TR 75-15, April 1976.

(5) M. E. Tanenhaus and R. Martin, "Linear Integrated Circuit Models and Applications for Computer-Aided Circuit and Systems Analysis and Design," Proceedings of the Eighth Asilomar Conference on Circuits, Systems and Computers, December 1974.

(6) A. F. Malmberg, "Users Manual, NET-2 Network Analysis Program, Release 9," Braddock, Dunn and McDonald, Inc., September 1973.

(7) A. T. Malmberg, NET-2 Network Program Analysis Addendum to User's Manual for Release 9.1," THE BDM CORPORATION, November 1977.

(8) D. L. Culp, "Multi-Record Wave Investigator for Sine and Random Data," Magnavox Electronic Systems Company, February 1982.

(9) R. S. Reed, "A Digital Computer Program for the Analysis of Wave-Form Data - MR WISARD," NOLTR 69-28, J. S. Naval Ordnance Laboratory, White Oak, Silver Spring, Maryland, 30 January 1969.

(10) D. L. Mensa, "High Resolution Radar Imaging," Artech House, 1981.

(11) M. E. Tanenhaus, "Ship and Anti-ship Missile Signature Modeling for Weapon System Effectiveness Assessments," Twenty-Fourth Tri Service Radar Symposium, 1978.

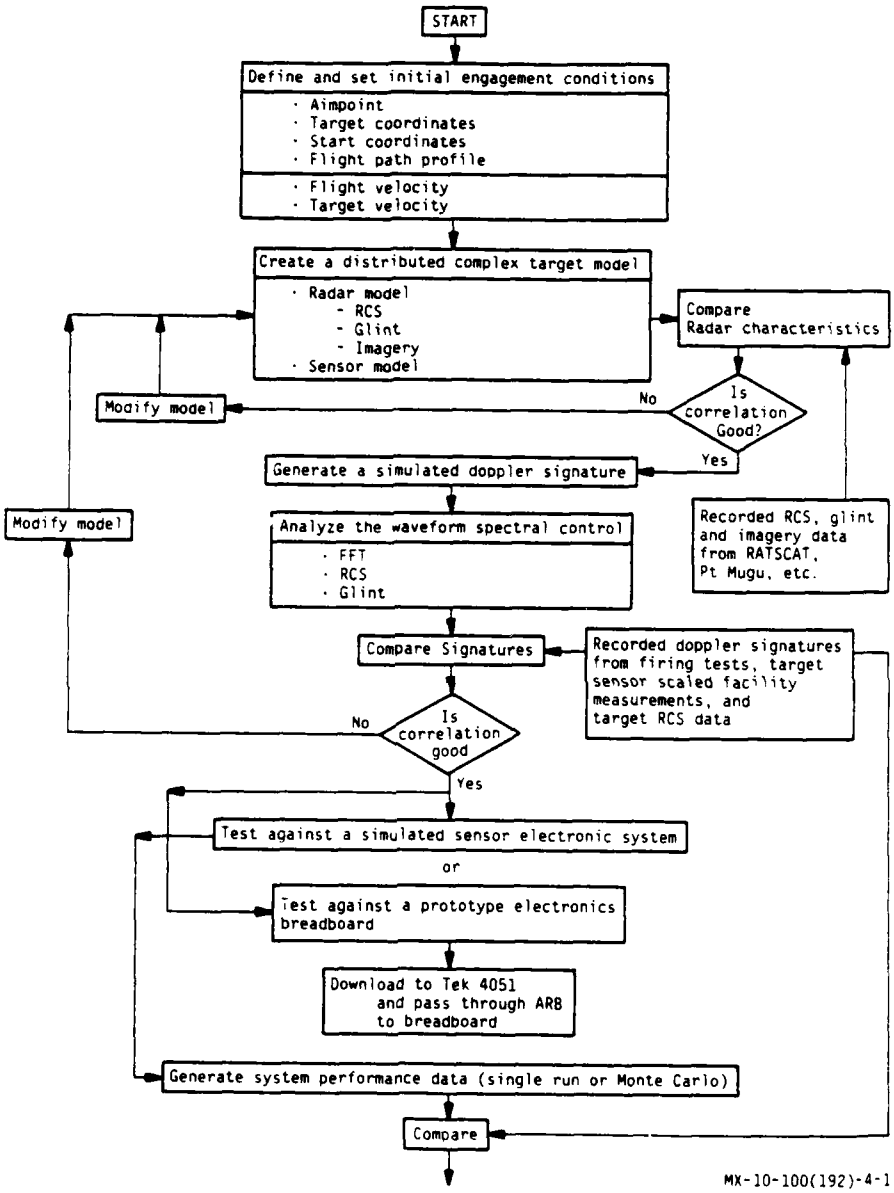

Figure 1. Methodology of Smart Munitions Effectiveness (Sheet 1 of 2)

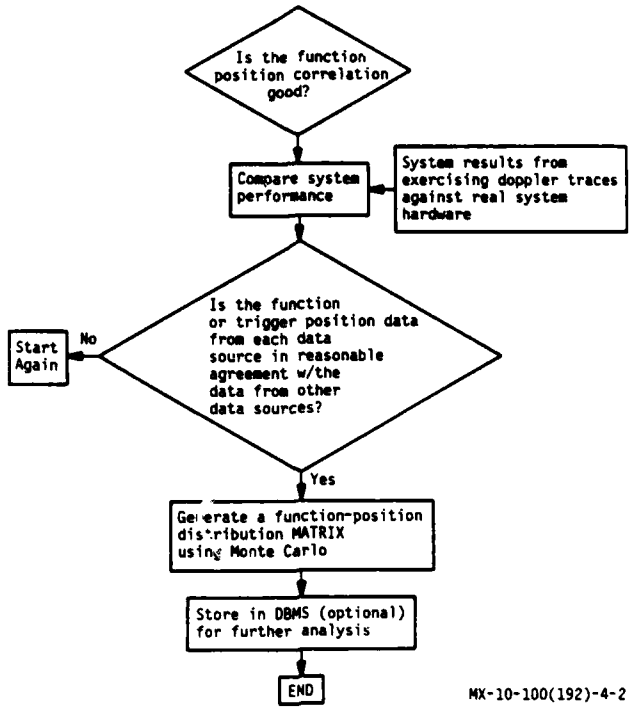

Figure 1. Methodology of Smart Munitions Effectiveness (Sheet 2 of 2)

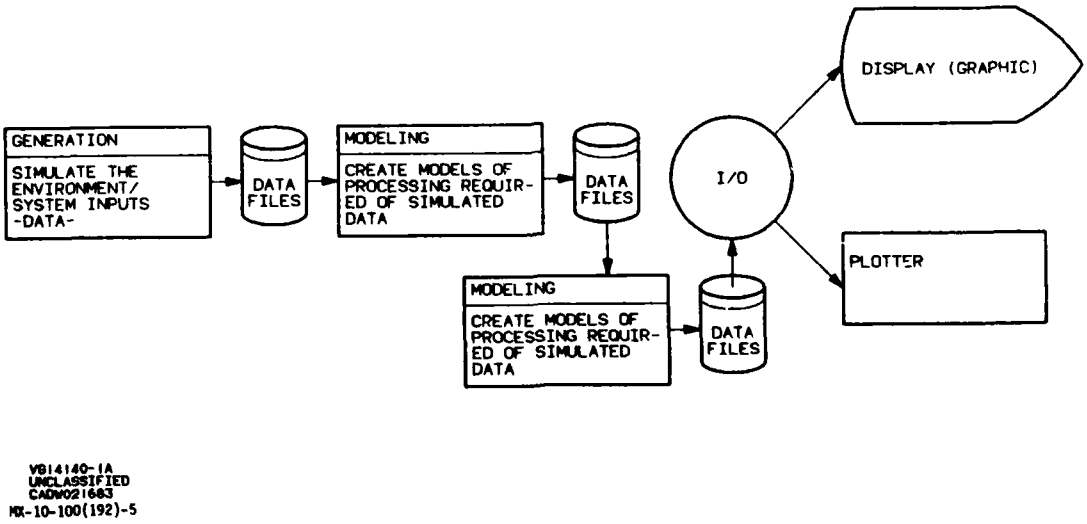

Figure 2. Simulation Methodology Overview

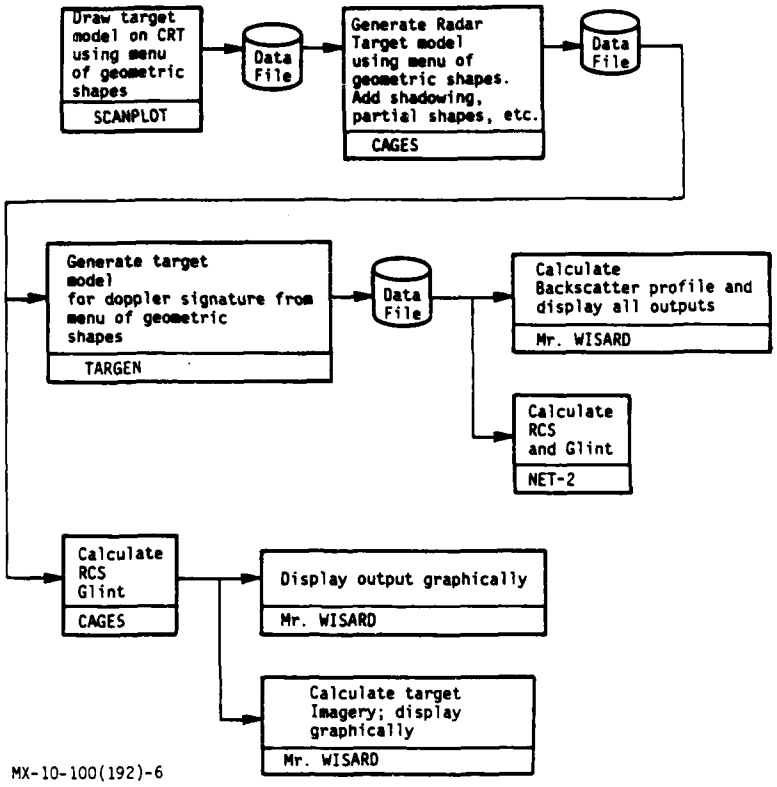

Figure 3. Flow Diagram for Graphics Driven Radar Target Modeling (with References to Subsequent Figures)

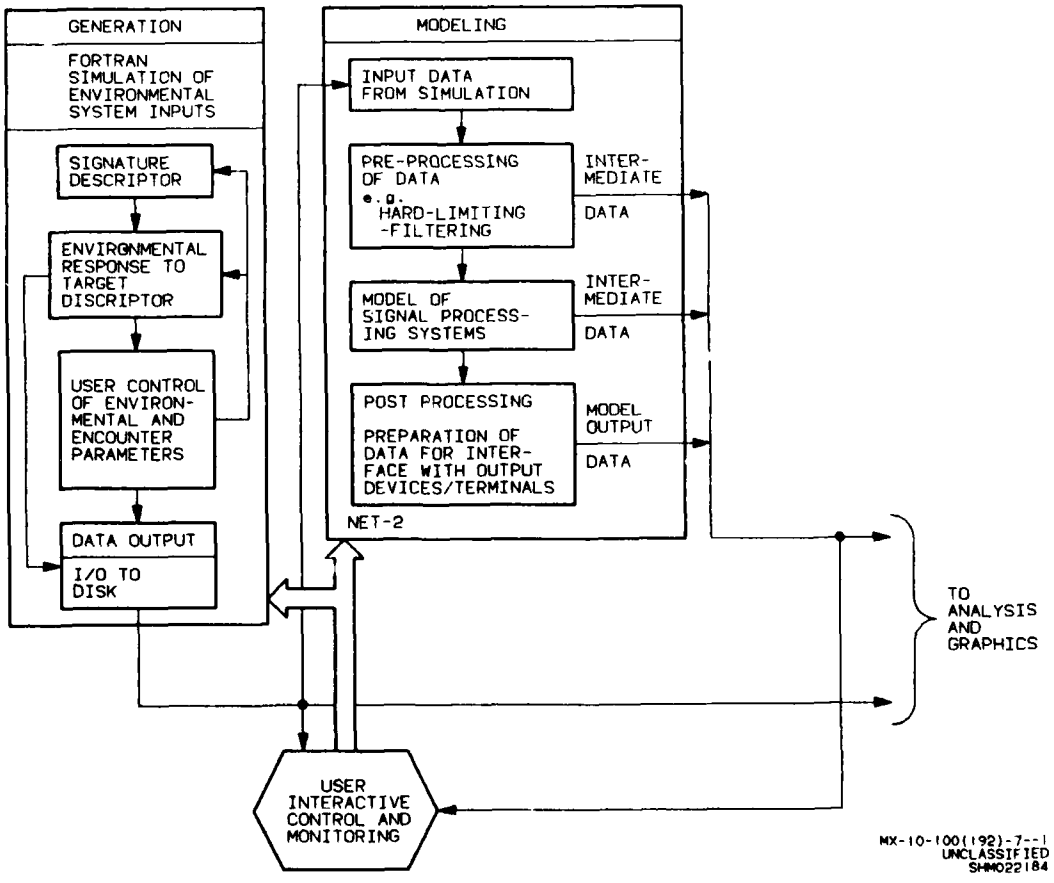

Figure 4. User Friendly Signal Modeling Electronic System Simulation and Evaluation Methodology (Sheet 1 of 2)

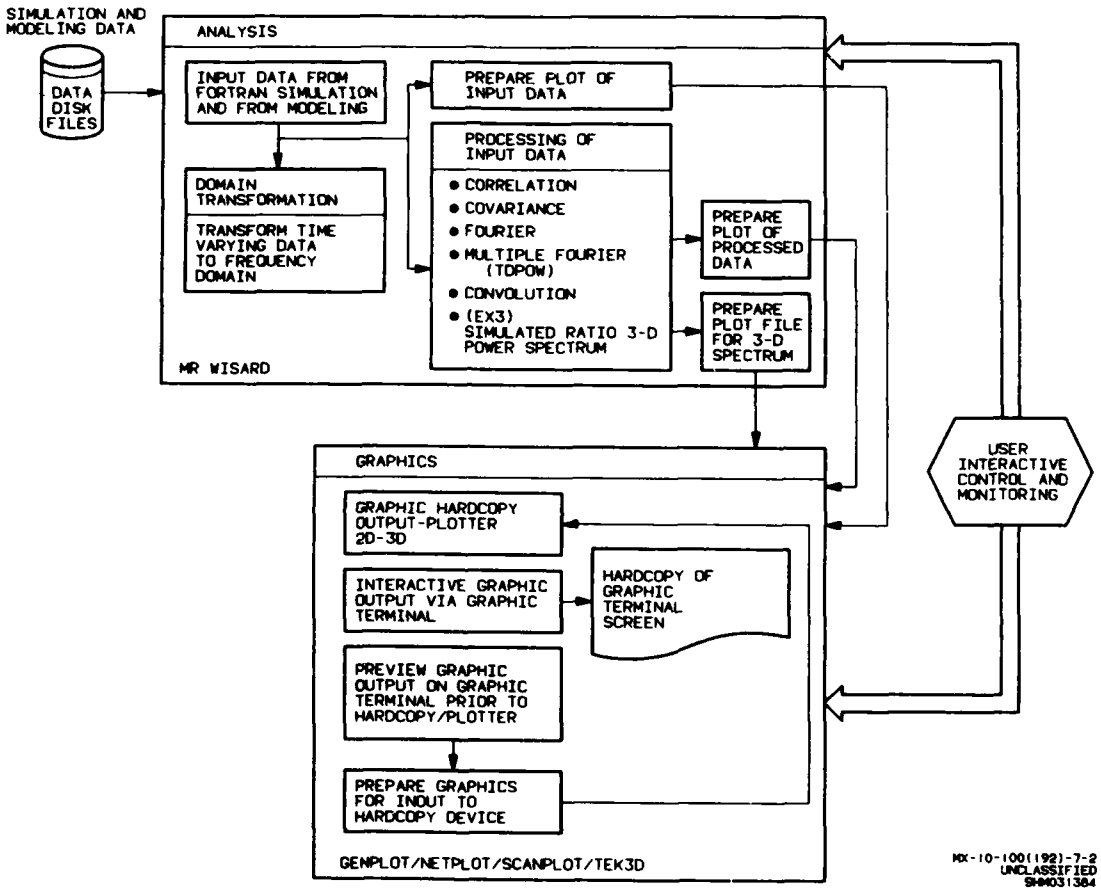

Figure 4. User Friendly Signal Modeling Electronic System Simulation and Evaluation Methodology (Sheet 2 of 2)

```
          INTERACTIVE PROMPTS                    USER RESPONSES

SIM
 11/16/82                          6.27.48

ENTER JOB NAME. DEFAULT=USERID
JOB NAME? ===>                                          DPT522NA
ENTER RUN OR USER NAME (8 CHARS MAX ; EG.RUNX1Y1 OR SMITH)
RUN NAME? ===>                                          TEST 1
        DESTINATION OF JOB OUTPUT ?
             BLD-3 TEST CENTER  = U2
             TECH CENTER        = R10
             BLD-3 COMPUTER RM  = LOCAL
             DEFAULT            = R10
            DESTINATION? ===>                           R10
DO YOU WISH OUTPUT PRINTED (P) OR  HELD (H) ?  DEFAULT IS PRINT.
(P/H) ??? ===>                                          H
ENTER USERID SUFFIX LETTER FOR JOB NAME.
DEFAULT IS A
SUFFIX? ===>
                                                        A
NUMBER OF COPIES.(MAX=4)? DEFAULT = 1
COPIES ? ===>                                           1
JOB CLASS (A,B,D,Y)???  DEFAULT = A
JOB CLASS? ===>                                         A
DO YOU WISH FT10,FT11,FT14 FILES SAVED ???
DEFAULT IS TO DELETE.

SAVE FT FILES? ===>
                                                        N
ENTER YOUR PREFERENCE OF VOLUME TO BE USED FOR FT10 THRU FT20 FILES.
DEFAULT = WORK VOL.
VOLUME (WORK,TSO,ENG)??? ===>                           WORK
SOURCE MODULE NAME? (TSO.FORT MEMBER)
MEMBER NAME ONLY.
(ENTER "SPECIAL" TO NAME ANY OTHER DATA SET YOU WISH TO USE)
SOURCE MEMBER NAME? ===>                                SPHERE
NAMELIST  TSO.FORT  MEMBER NAME?
NAMELIST FILE? ===>                                     SPHNL
NET-2 INPUT FILE NAME? ( TSO.FORT MEMBER )
NET-2 FILE? ===>                                        SPHNET
ENTER SPECIAL DATA SET QUALIFIER, USED TO MAKE ANY
DATA SET NAMES FOR THIS JOB UNUQUE. 4 CHARACTERS MAX
(DEFAULT=YOUR JOB NAME).

QUALIFIER? ===>                                         N16T1
COMPILE (C) : TO COMPILE AND EXECUTE YOUR FORTRAN SOURCE, AND NET-2.

NET2 (N)    :  TO EXECUTE NET-2.

CO          :  TO  COMPILE AND EXECUTE FORTRAN SOURCE.
               THIS DATA CAN BE RUN THRU NET2 AND/OR WISARD WRITE
        LATER WITH ANOTHER RUN.

GO  OR  G   :  TO EXECUTE YOUR LOAD MODULE ONLY.

GONET  OR  GN  :  TO EXECUTE YOUR LOAD MODULE AND NET2
                  IN SEQUENCE.

WO          :  TO EXECUTE *WISARD ONLY.

(C,N,CO,G,GN,WO) ??? ===>                               C
TIME LIMIT FOR JOB?
TIME? ===>                                              1
```

MX-10-100(192)-30

Figure 5. Sample of Interactive Session

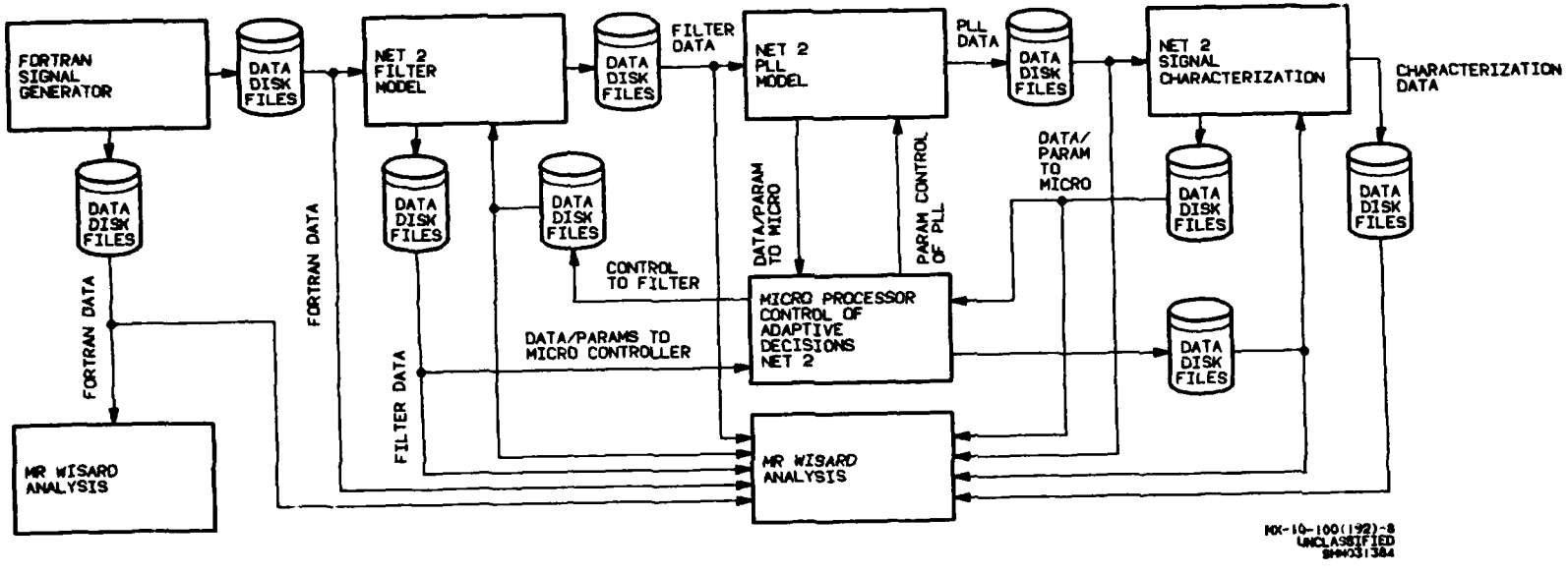

Figure 6. Electronic Circuit/System Simulation and Analysis Methodology

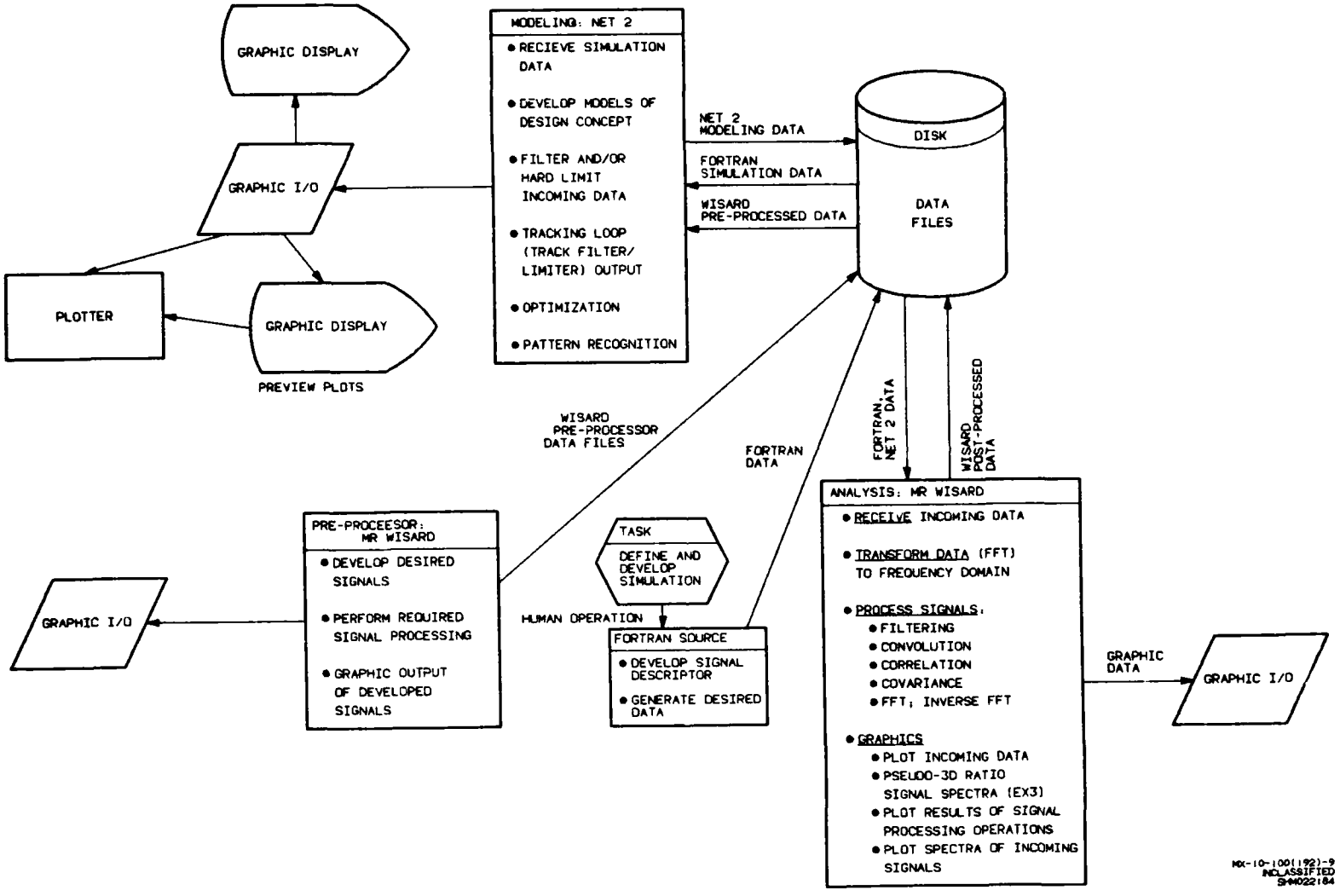

Figure 7. Mr. Wisard Pre and Post Processor Electronic System Simulation Diagram

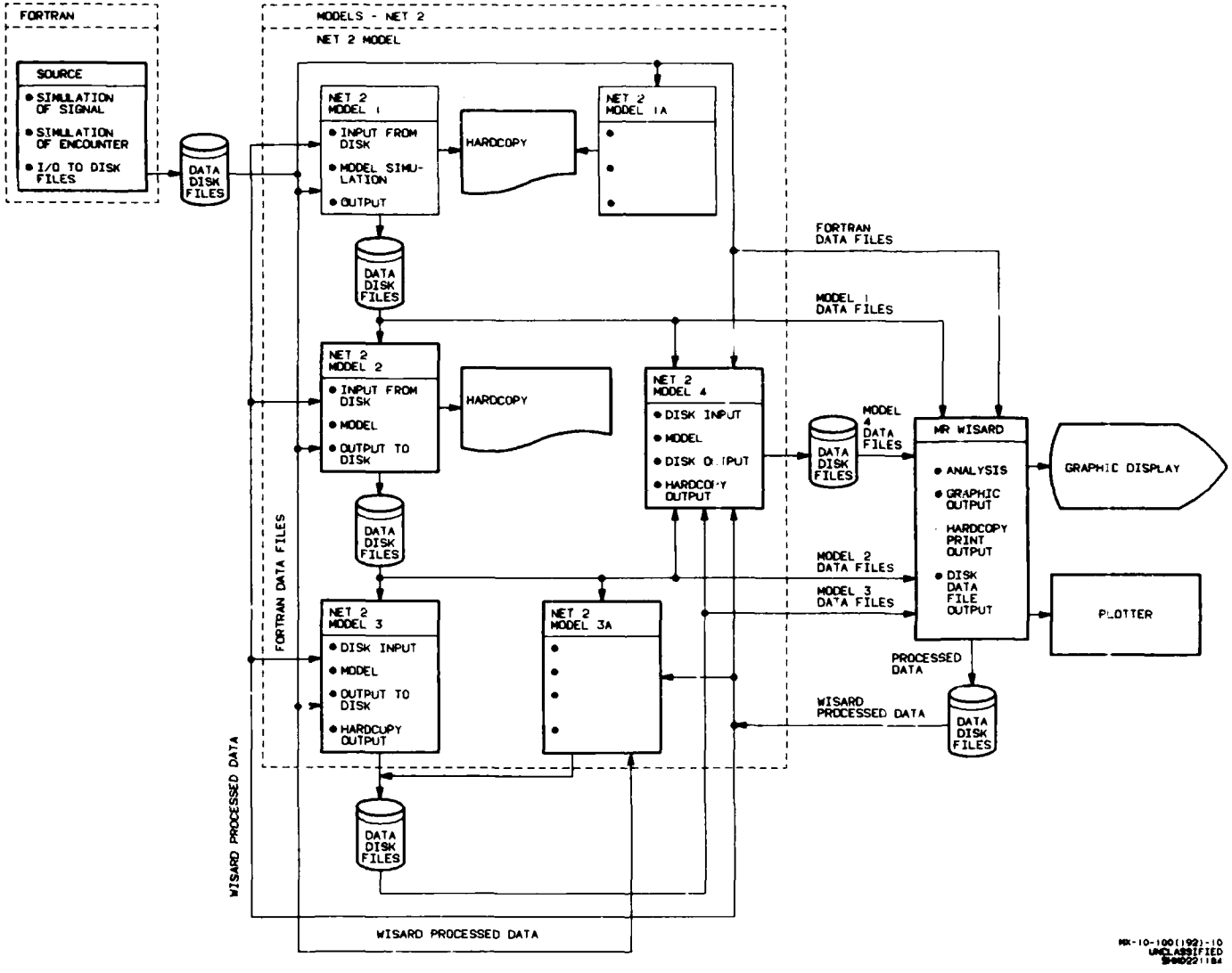

Figure 8. Multi Sequential Modeling Technique

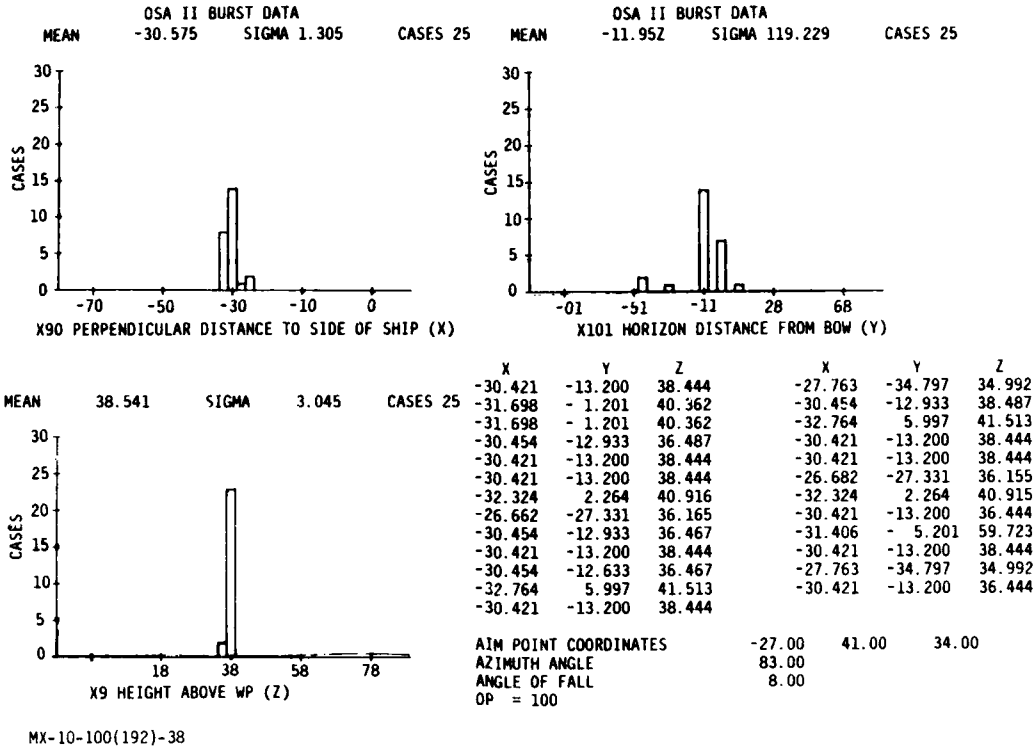

Figure 9. Ship Burst Data Comparisons

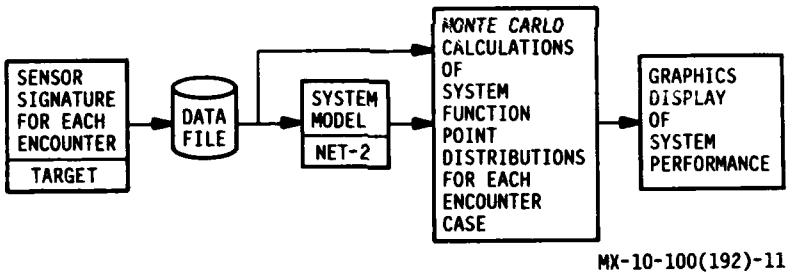

Figure 10. System Performance Assessment

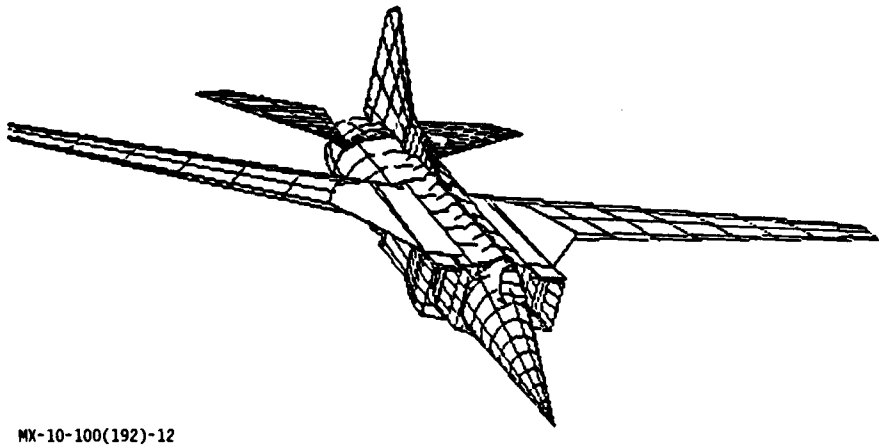

Figure 11. Aircraft Target Image

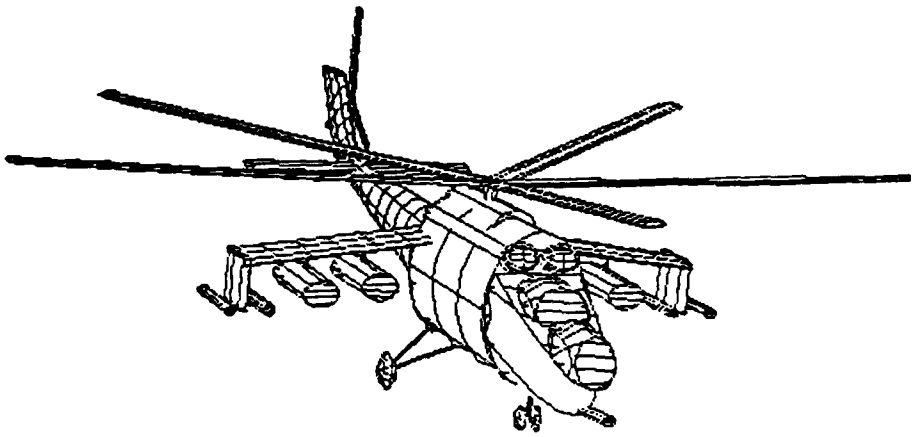

MX-10-100(192)-13

Figure 12. Helicopter Target Image

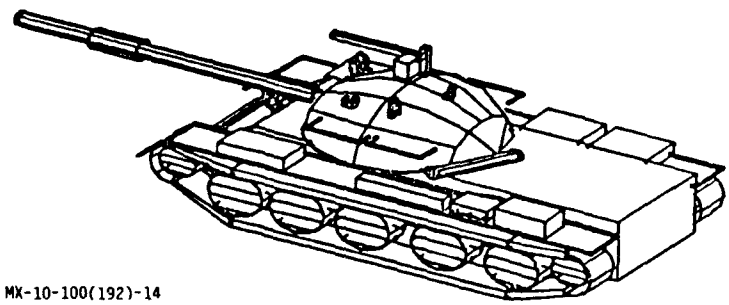

MX-10-100(192)-14

Figure 13. Tank Target Image

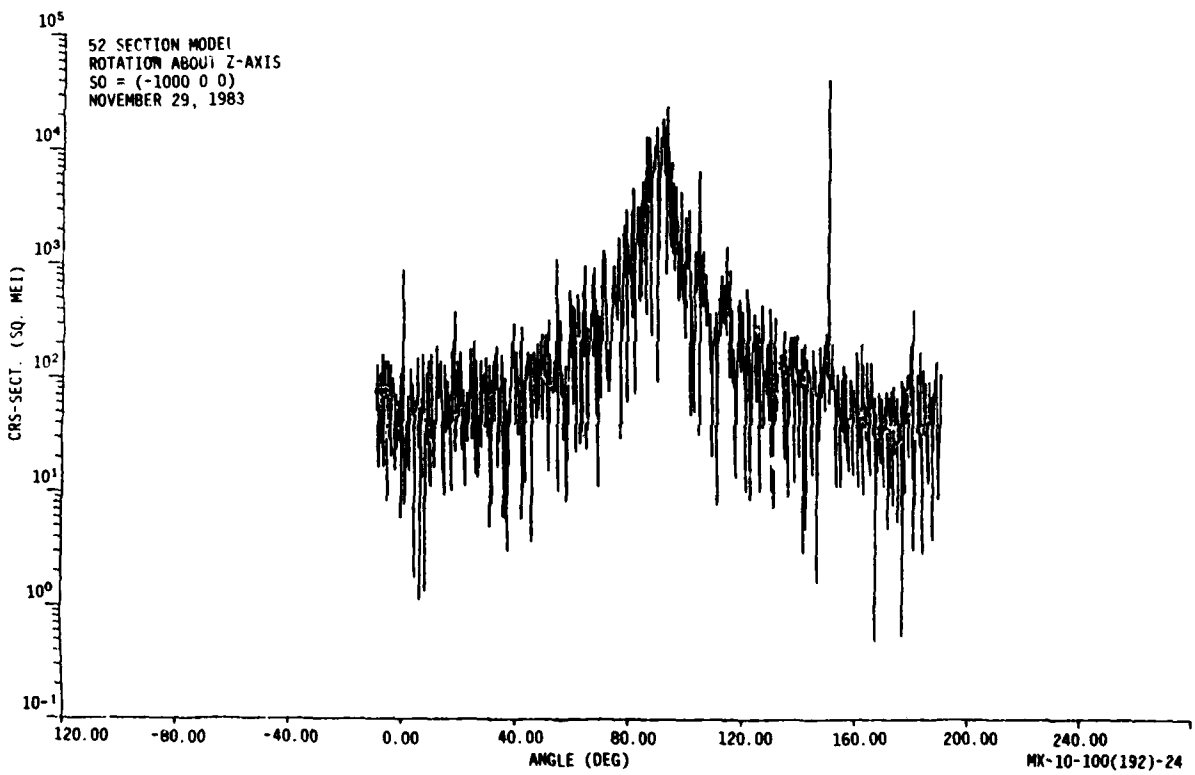

Figure 14. Helicopter Radar Cross-Section

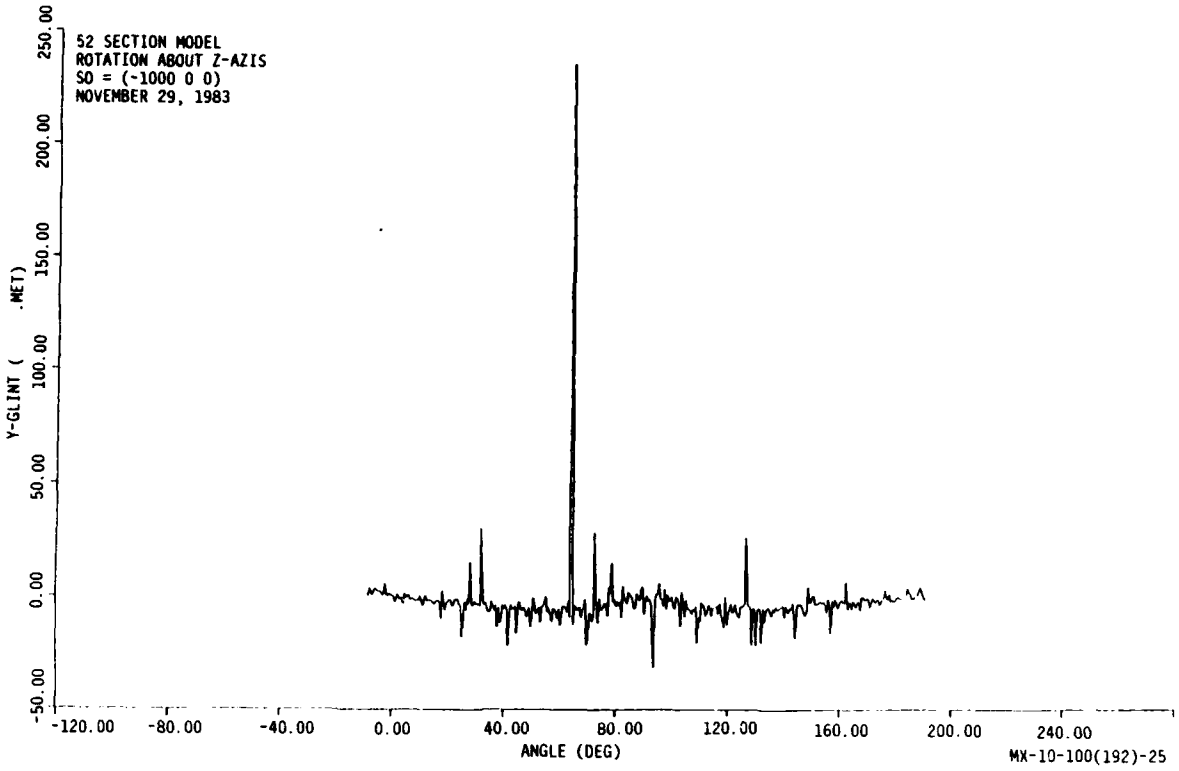

Figure 15. Helicopter Y-Axis Glint

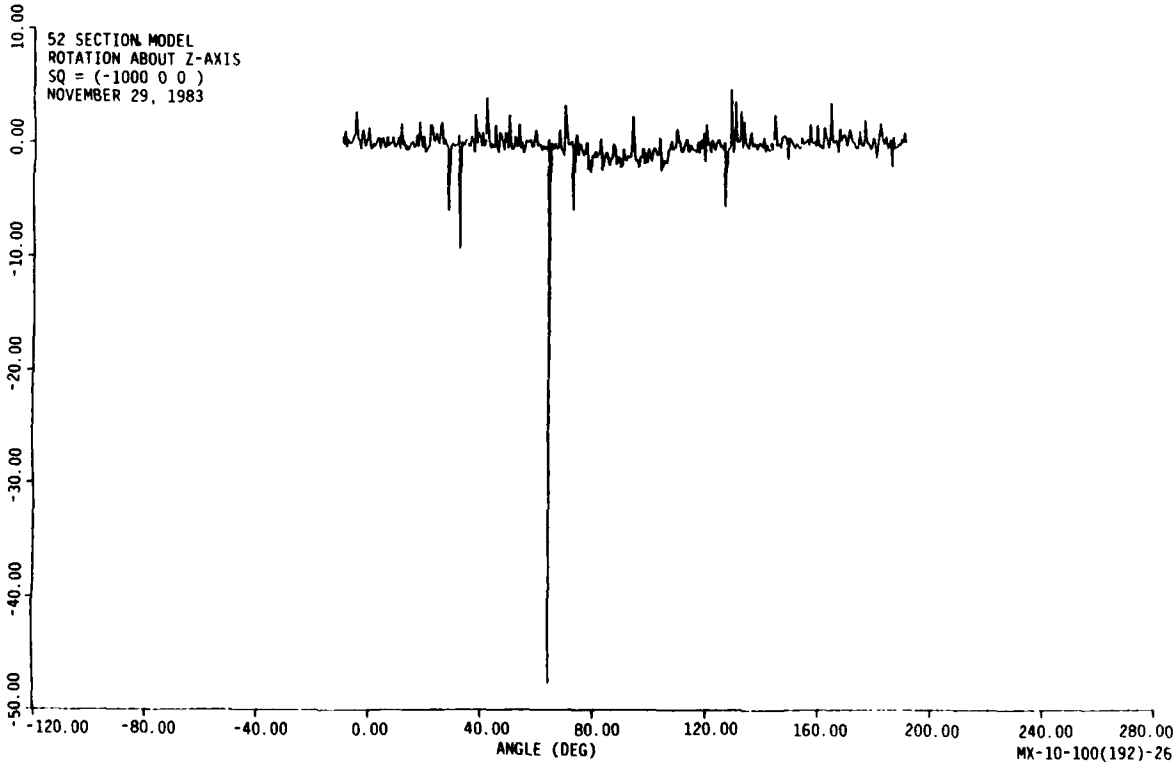

Figure 16. Helicopter Z-Axis Glint

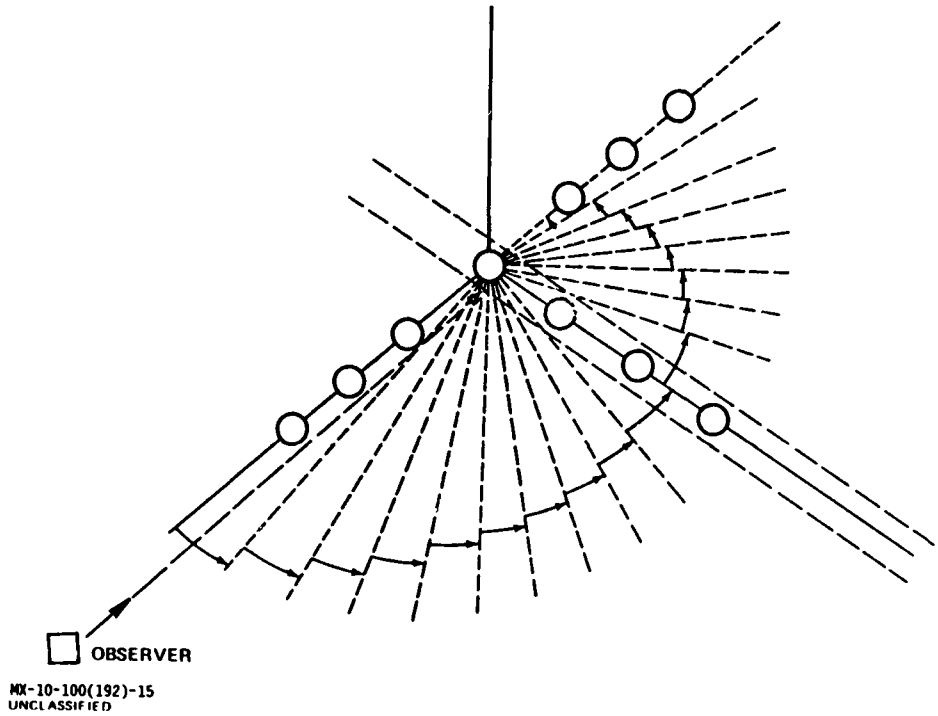

Figure 17. SAR Imaging 4-Sphere Target Geometry

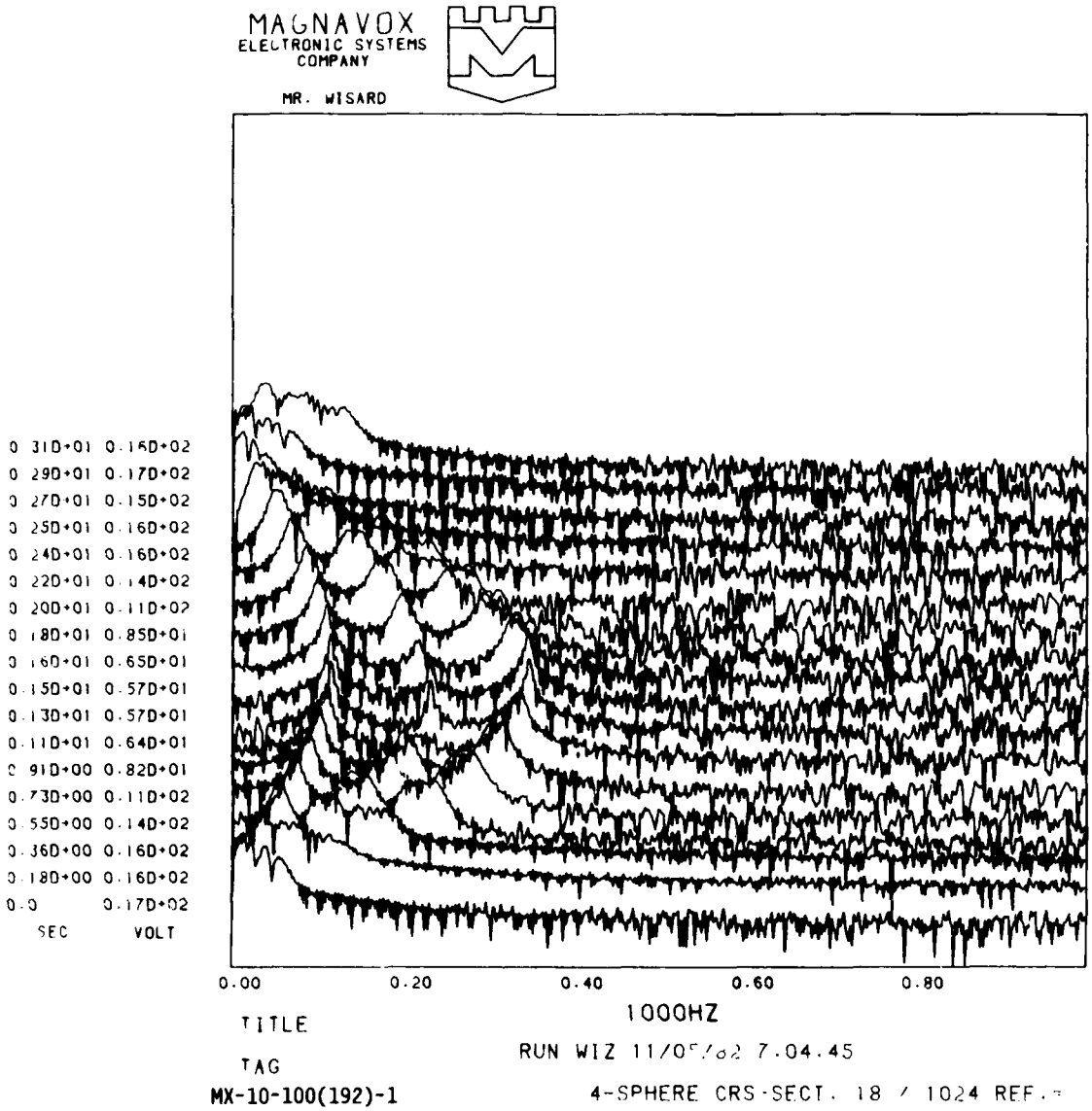

Figure 18. SAR Spectral Imaging 4-Sphere Target

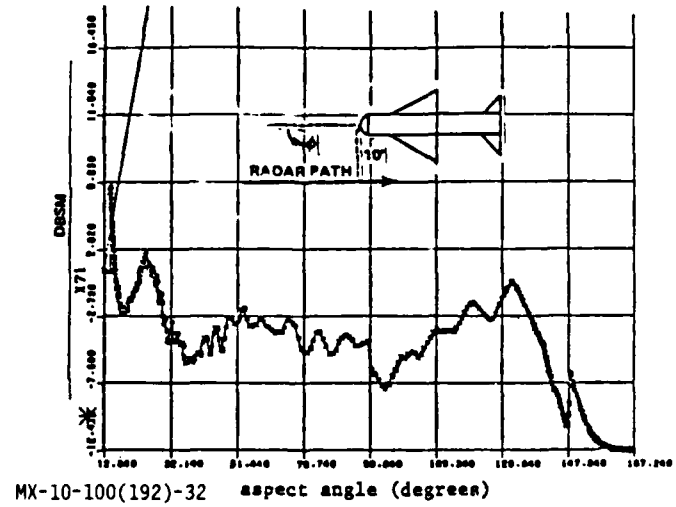

Figure 19. Plot of Radar Cross-Section of Target Missile Derived from Real Doppler Data at L-Band

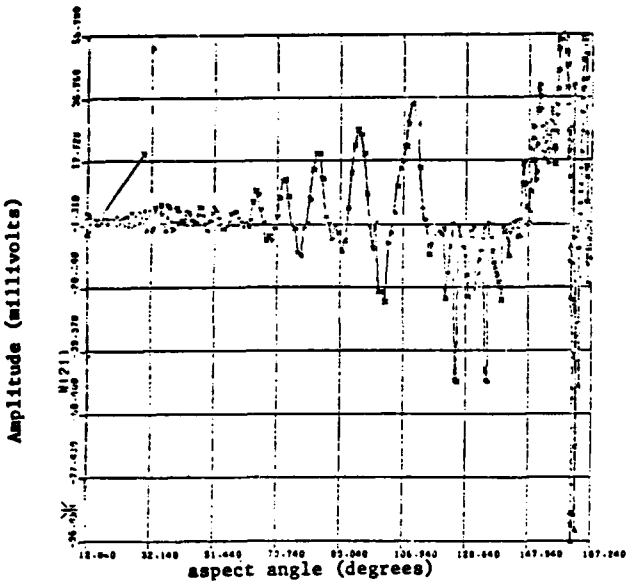

MX-10-100(192)-33

Figure 20. Plot of the Doppler Data from a Full Scale Target taken by an L-Band Transmitter at the Target Range

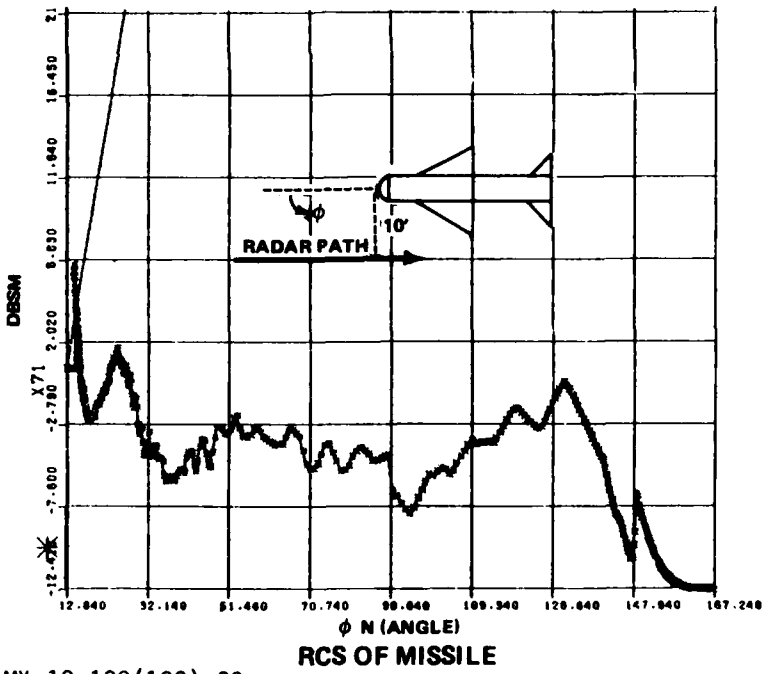

MX-10-100(192)-39

Figure 21. RSC of Missile

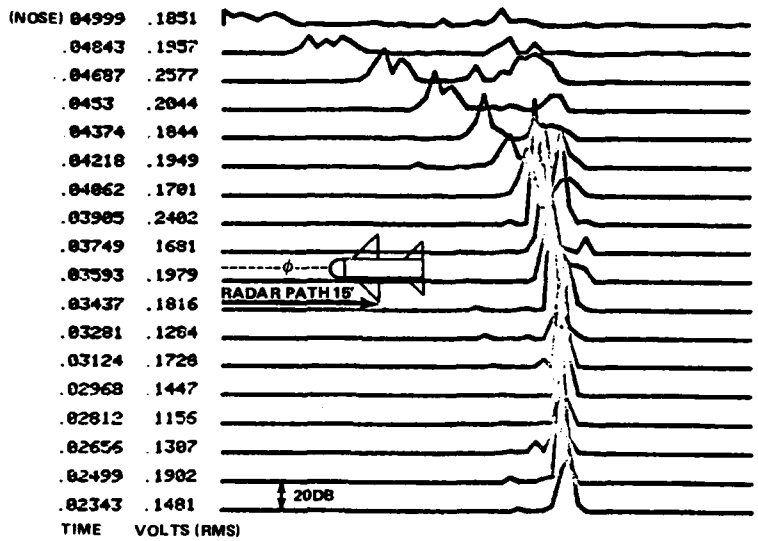

MX-10-100(192)-40

Figure 22. Time Vs. Vrequency Vs. SPECTRA Backscatter Profile of Missile

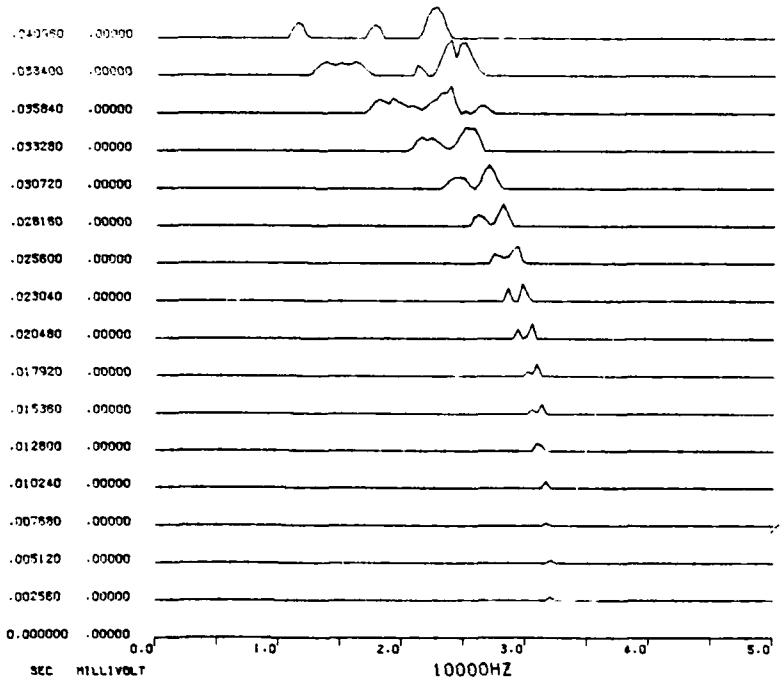

MX-10-100(192)-36

Figure 23. Backscatter Profile of Simulated Missile

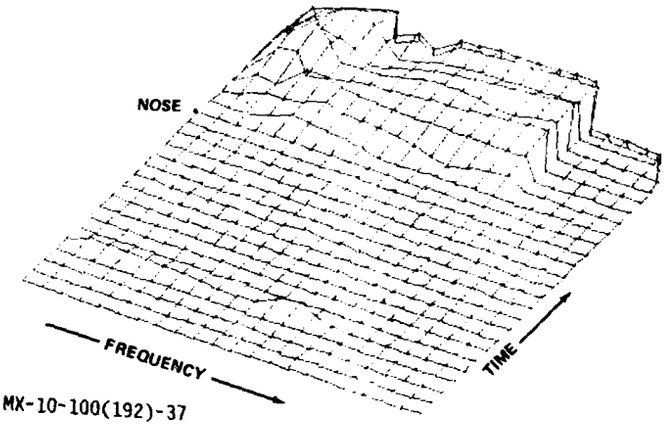

Figure 24. Nornalized Frequency Response Simulated Missile Vs. Sphere

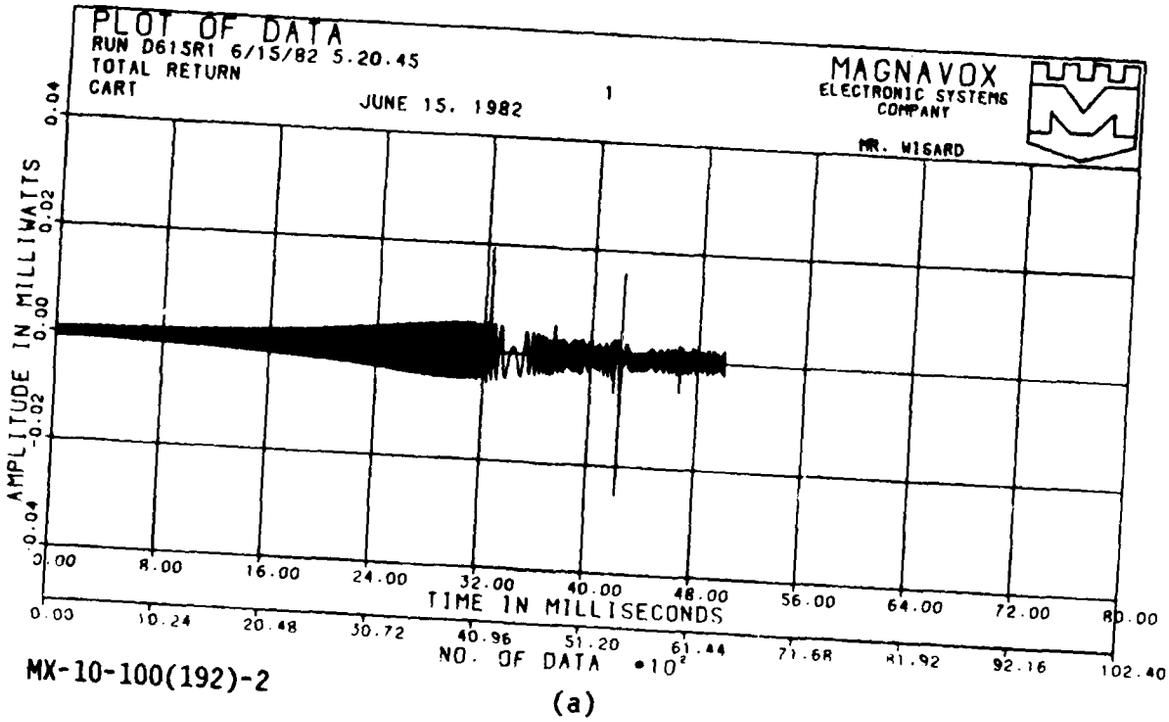

(a)

Figure 25. Typical Input Signals

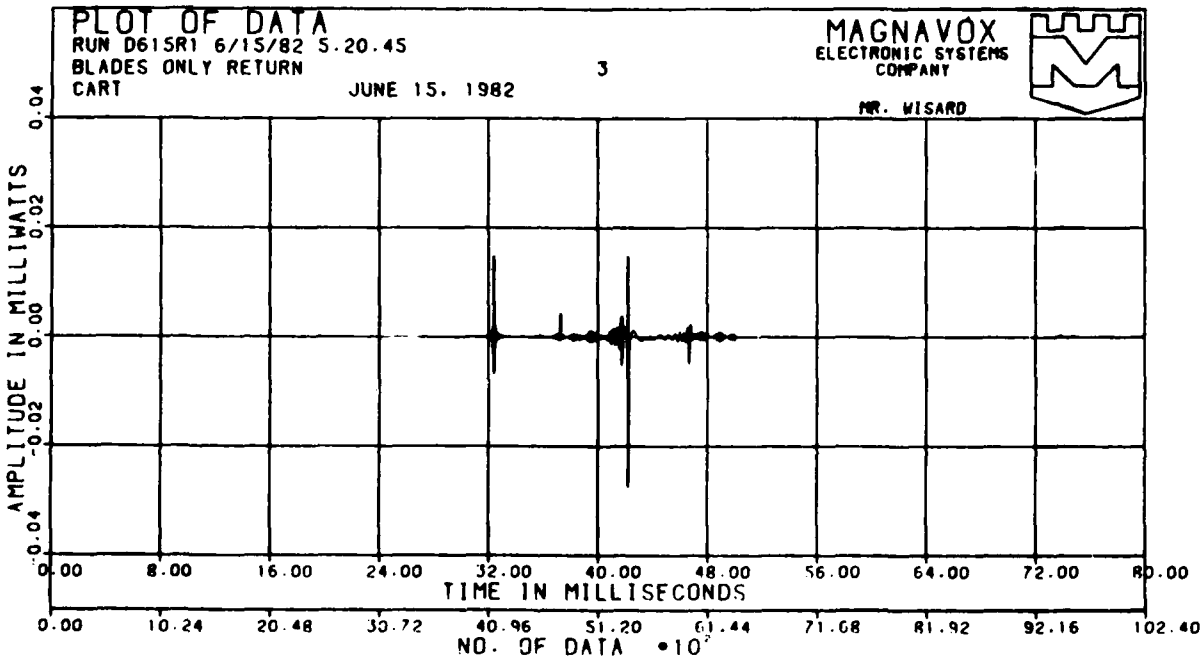

MX-10-100(192)-2

(b)

Figure 25. Typical Input Signals

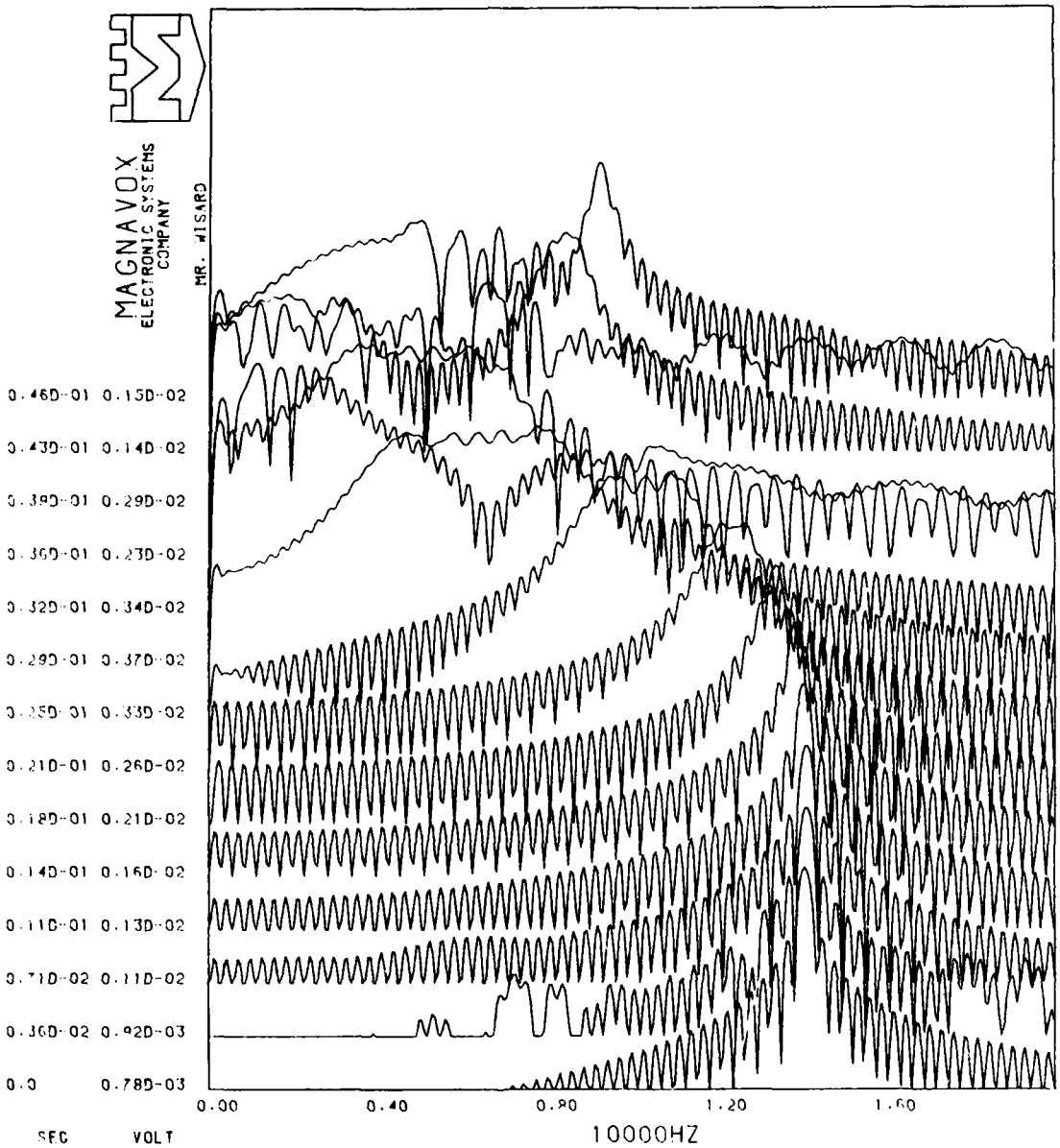

MX-10-100(192)-3

(a)

Figure 26. SPECTRA for Figure 25 Inputs

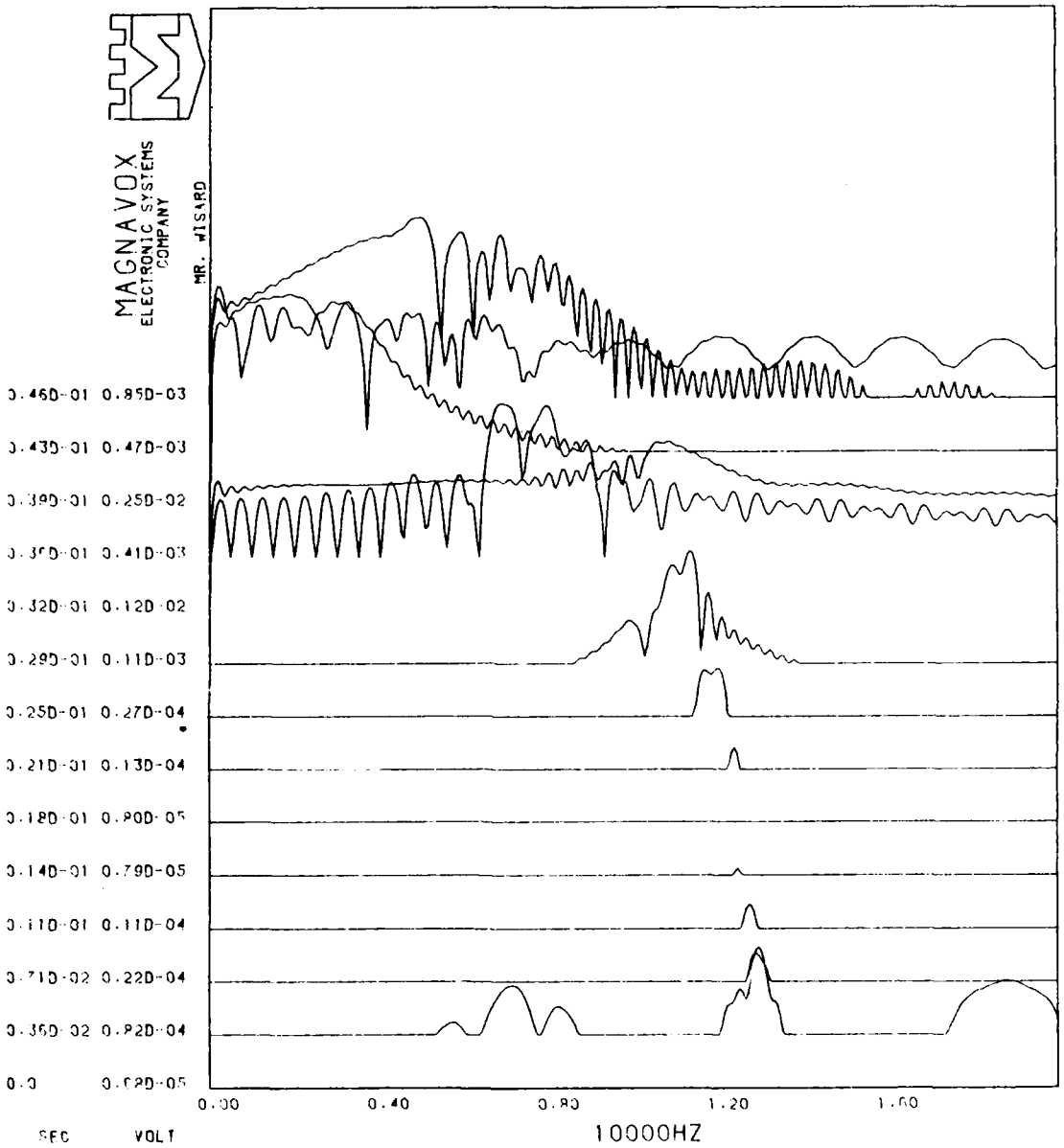

MX-10-100(192)-3

(b)

Figure 26. SPECTRA for Figure 25 Inputs

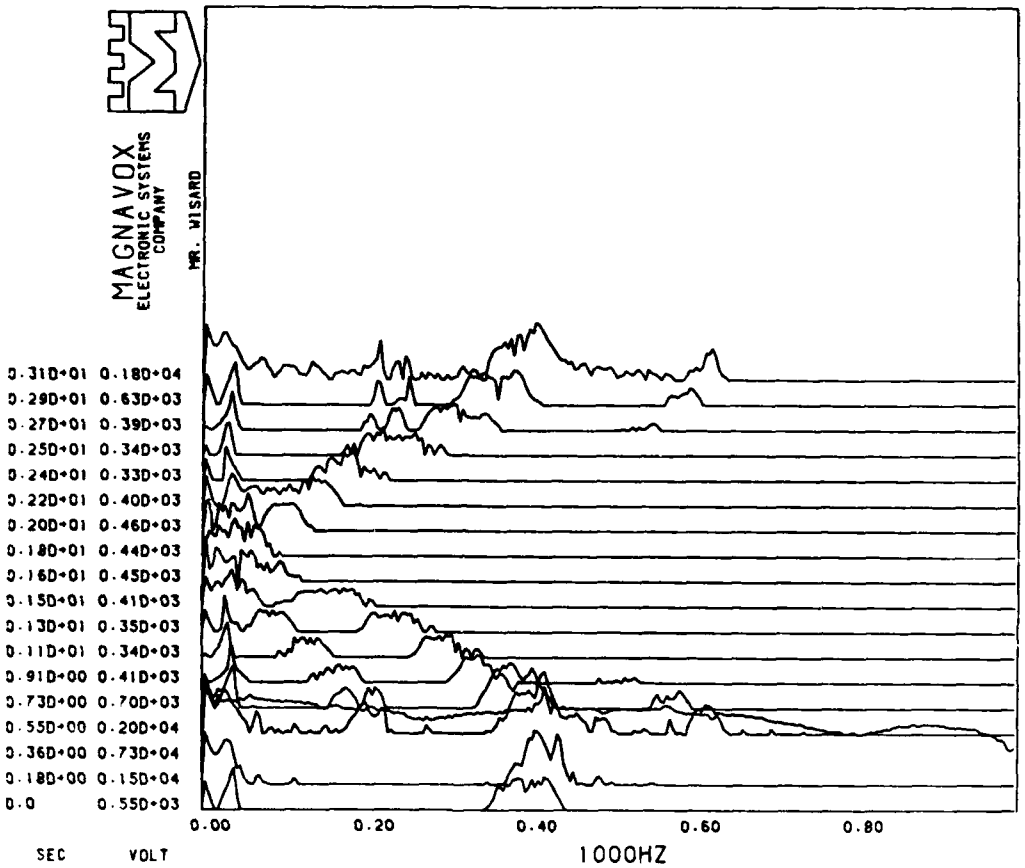

TITLE RUN WIZ 11/05/82 7.04.45

TAG CRS-SECT. 18 / 512 REF.= 10@

MX-10-100(192)-29 (A)

Figure 27. Helicopter SAR SPECTRAL Imaging and Signature Backscatter SPECTRA Profile

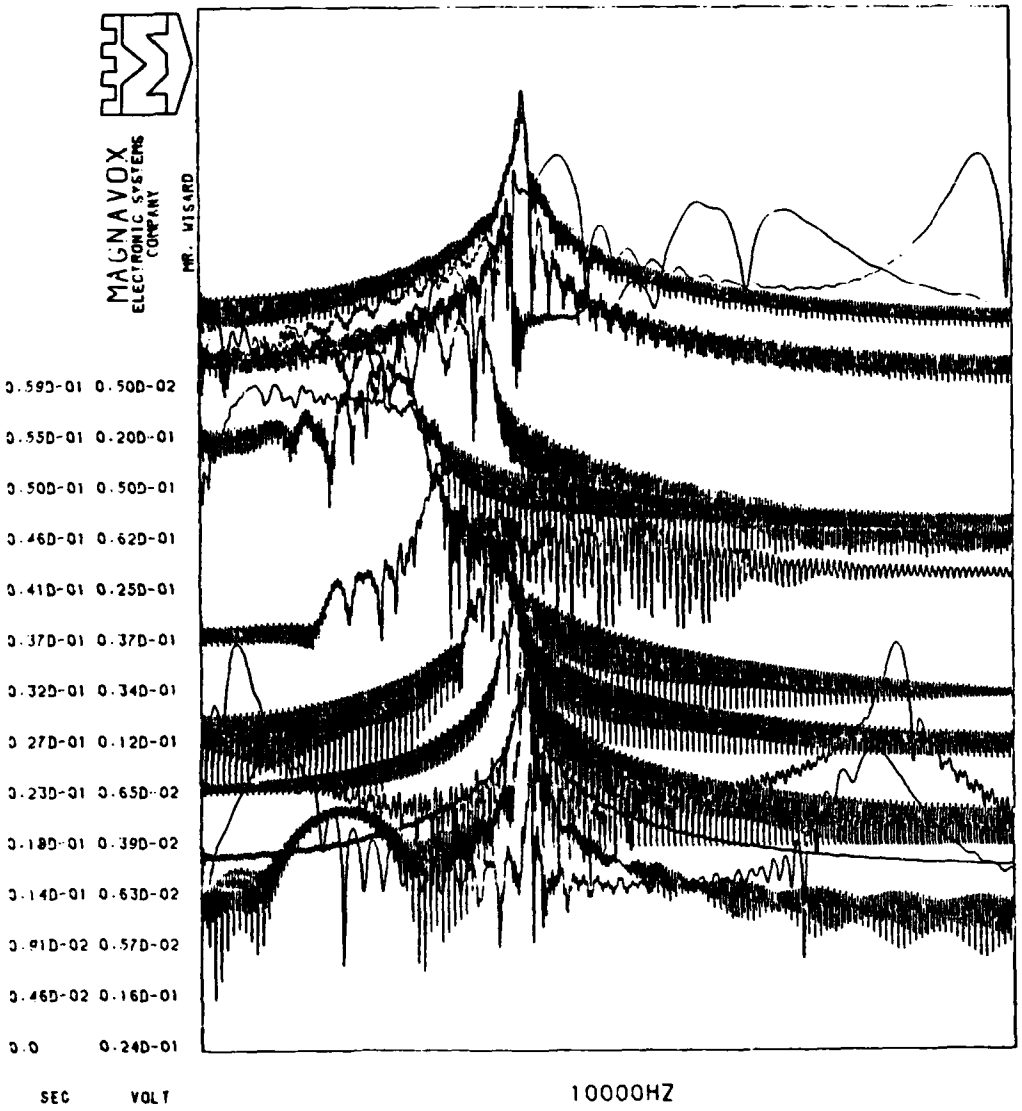

TITLE RUN D707R4 7/07/82 9.50.13
TAG TOTAL RETURN

MX-10-100(192)-29 (B)

Figure 27. Helicopter SAR SPECTRAL Imaging and Signature Backscatter SPECTRA Profile

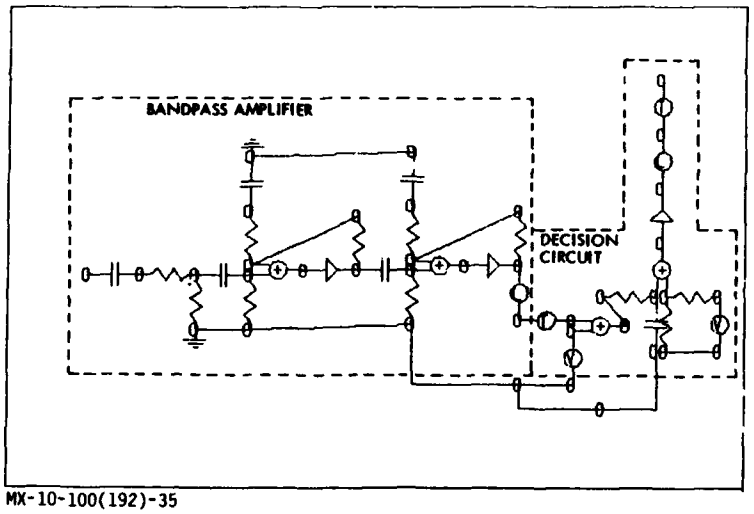

MX-10-100(192)-35

Figure 28. Net-2 Model of a Conventional Doppler Receiver

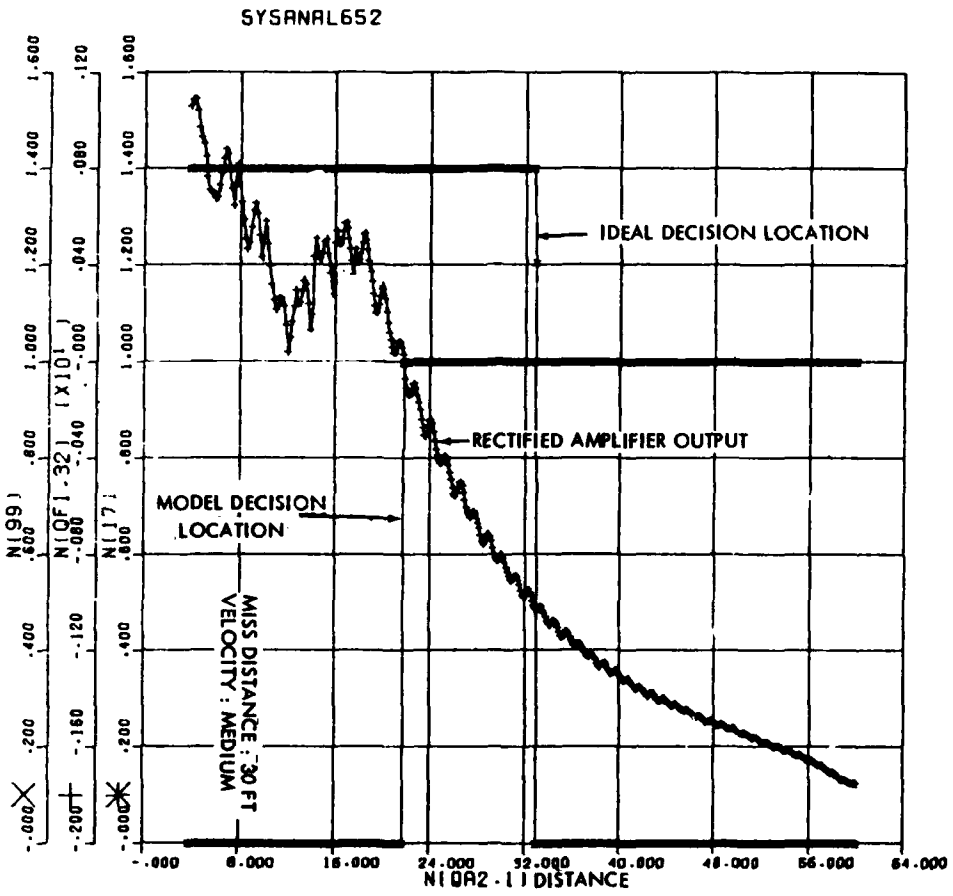

MX-10-100(192)-34

OUTPUT OF DOPPLER RECEIVER MODEL

Figure 29. Output of Doppler Receiver Model

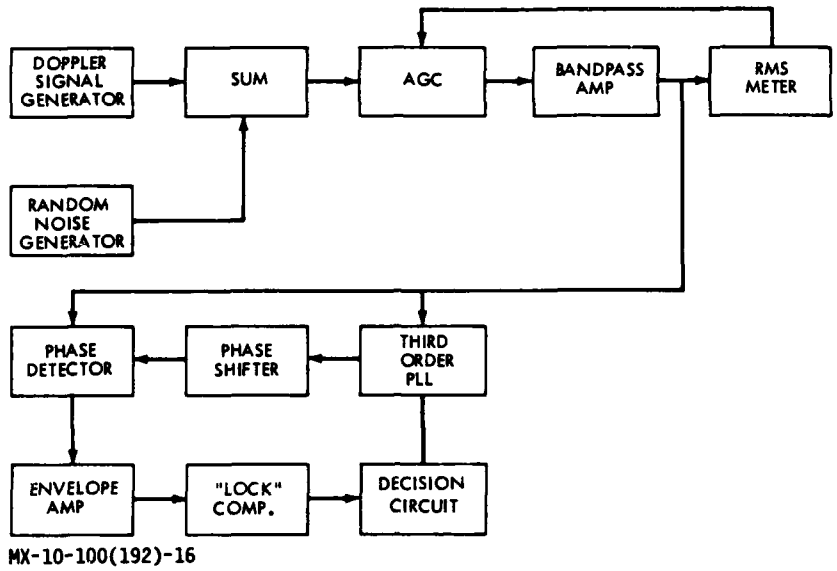

Figure 30. Doppler Frequency Signal Processor

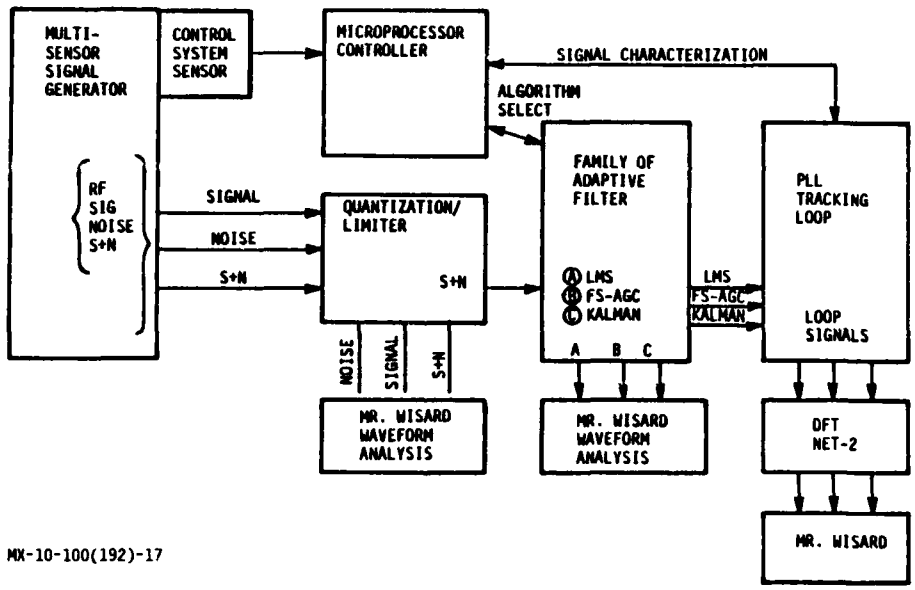

Figure 31. Signal Processor System Methodology

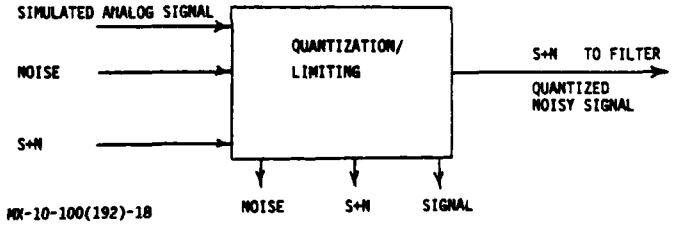

Figure 32. Quantization/Limiting Module

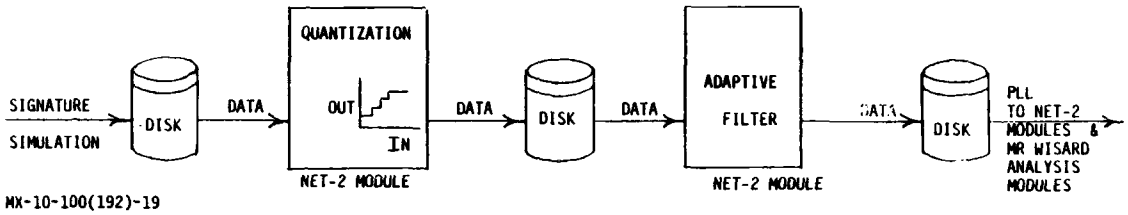

Figure 33. Passing of Quantization Data to Adaptive Filter

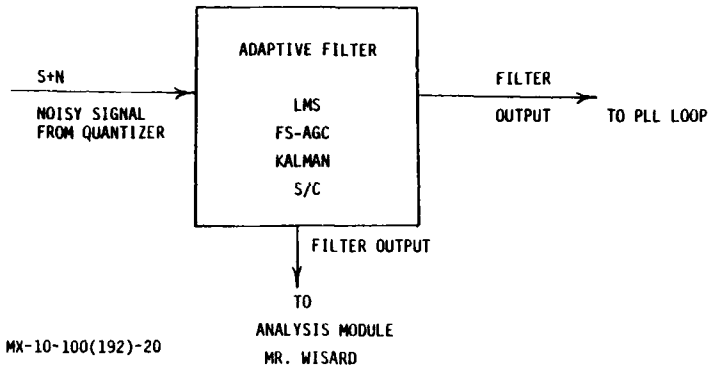

Figure 34. Adaptive Filter

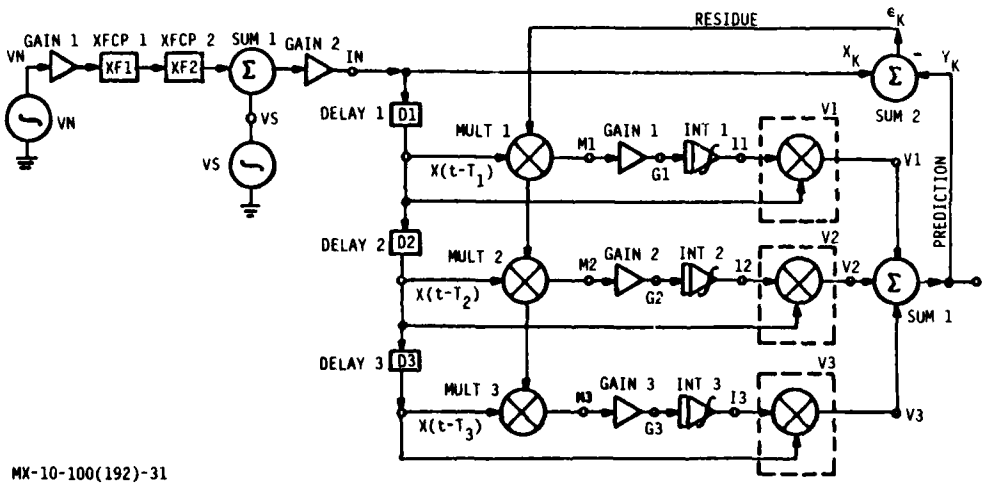

Figure 35. LMS Model Described in Net-2

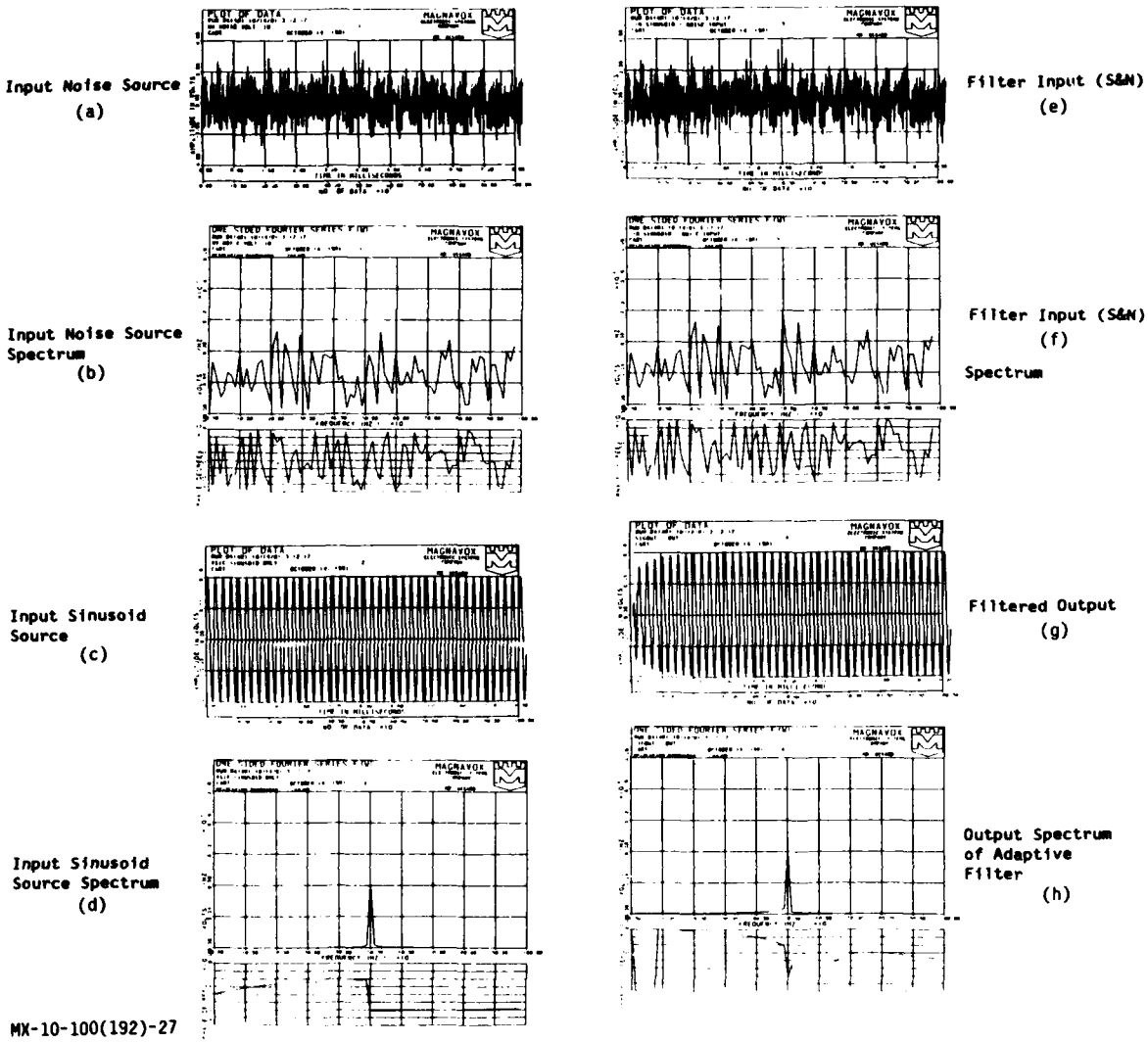

Figure 36. LMS Performance, -20 dB S/N

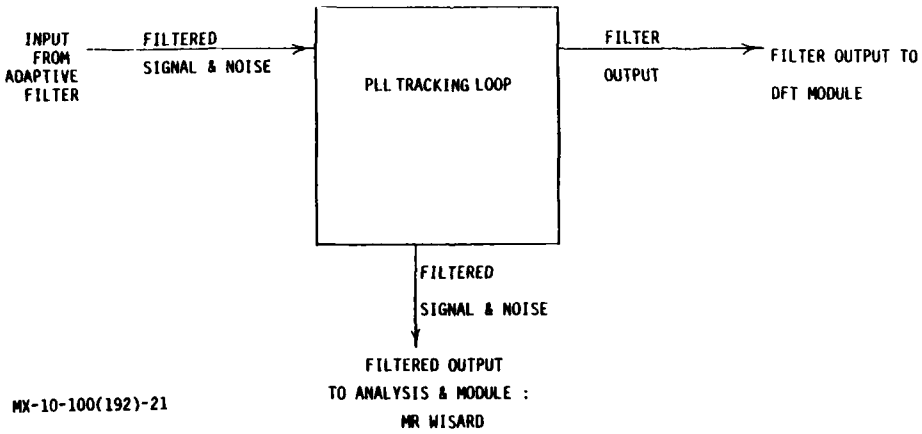

Figure 37. PLL Tracking Loop Configuration

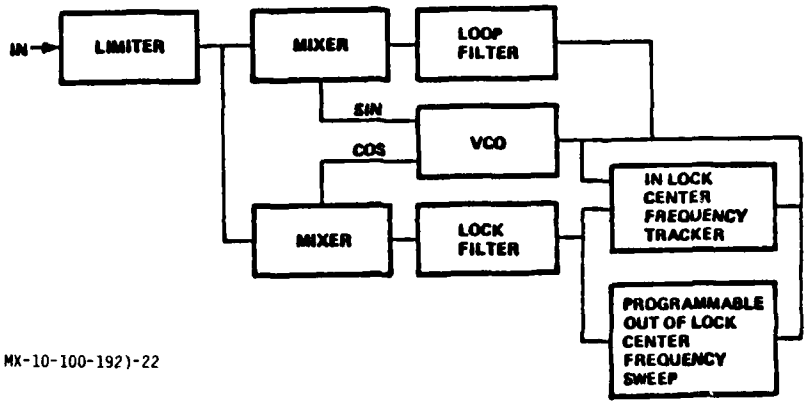

Figure 38. Advanced PLL AM Detector

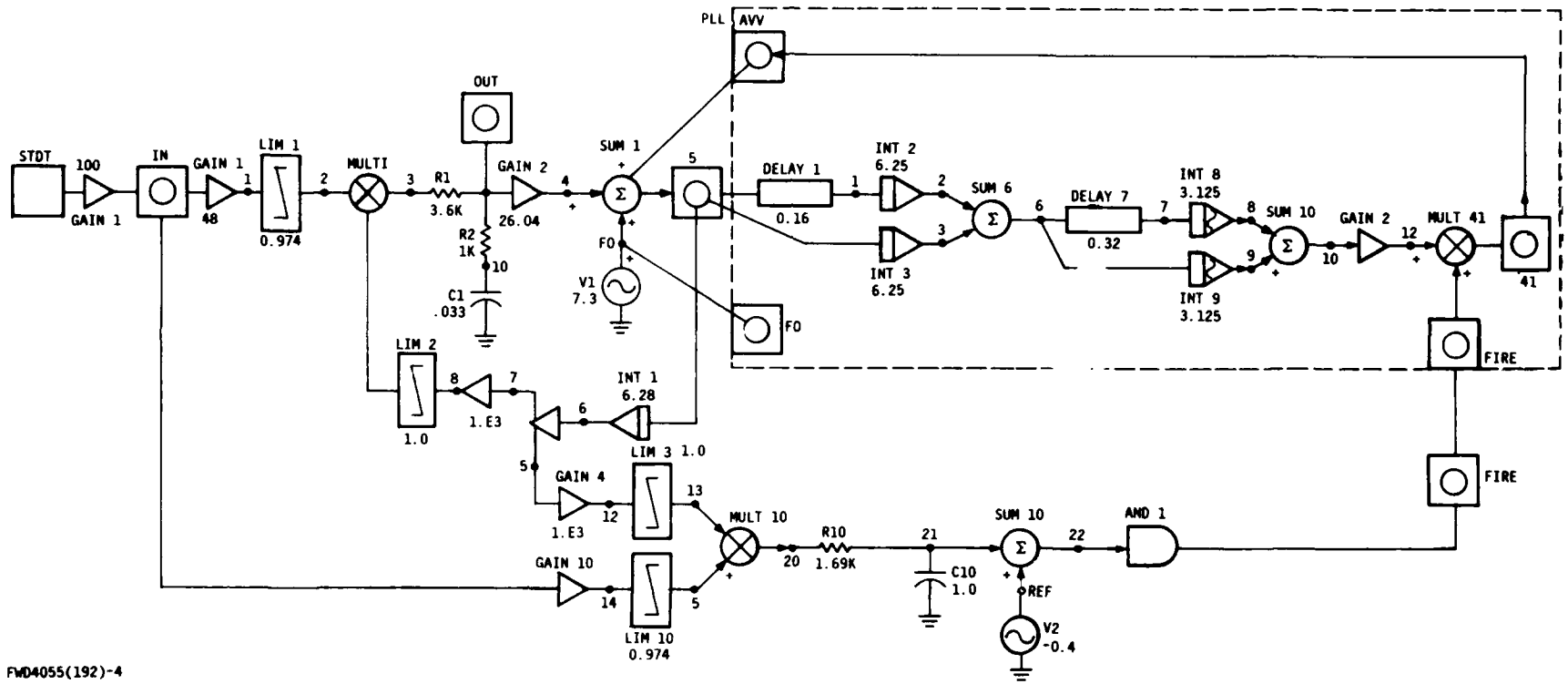

FWD4055(192)-4

1X-10-100(192)-23

Figure 39. PLL Model with Net-2 System Elements

OK

VIEWER	0.0	210.0	0.0	ROTATIC	15.00
CENTER	6.1	0.0	-3.62	SCALINC	20.80

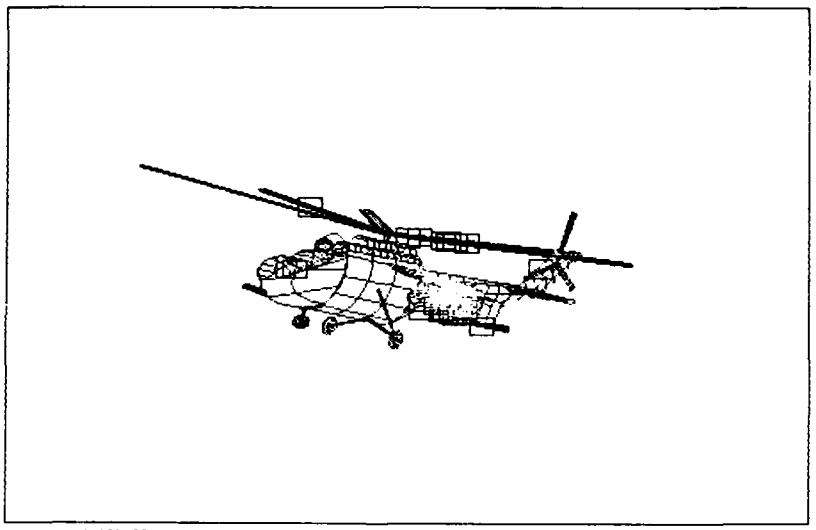

MX-10-100(192)-28

Figure 40. Vulnerability Target Model with Fragmentation Hits Shown as Enlarged Rectangles

DESIGN CRITERIA FOR HARDWARE-IN-THE LOOP SIMULATION FACILITIES

by

S.J.Powers and M.E.Sisle
Raytheon Company, Bedford Laboratories
Mail Stop M3-2
Hartwell Road
Bedford MA 01730, USA

ABSTRACT

This paper outlines the criteria used in the design of a Hardware-in-the-Loop (HIL) simulation facility. Although the paper deals with a missile interceptor facility, the criteria are directly applicable to any electronic weapon system simulation facility. The first step in the process is defining the role that the facility will play in the development cycle. Facility requirements which drive the model and data requirements are then defined and the facility design follows from the requirements. Following completion of the facility development is the conduct of system integration tests. Verification/validation criteria are established and met, and the process is complete, allowing the facility operation to begin. Facility operation and maintenance become ongoing functions.

1. INTRODUCTION

As systems have become more complex, the task of testing these systems has also increased in difficulty. This is true at all levels of system development: component design, module test, system integration, and system testing. This paper deals with the area of system testing, specifically the design and development of hardware-in-the-loop (HIL) simulation facilities to be used for the conduct of system tests.

This paper defines the criteria that should be considered in the design of the facility itself. It discusses the requirements driving the system design in the context of a physically and momentarily-limited world. The reasons for implementing (or not implementing) a HIL simulation are many, and will not be dealt with here. It is assumed that good and sufficient reasons exist for developing a HIL simulation tool.

The author's major area of expertise has been in the design of air-to-air, and ground-to-air missile systems. The paper's examples will necessarily emphasize this view. The principles presented, however, are usable in the design of any facility being developed for the testing of modern electronic weapon systems.

2. DESIGN CRITERIA

There are many factors that drive the design of a HIL facility. The major ones are:

System Requirements
Modeling Requirements
Data Requirements
Verification/Validation
Facility Design
Integration and Repair
Facility Use and Maintenance

The design criteria for a HIL facility must start with the system to be tested. This is the primary source from which the rest of the facility design is derived. System requirements dictate the modeling requirements for both the sytem and environment. The system and the models determine what data is available and lead to the data requirements. These in turn are used as the basis for verification and validation decisions. All of the above requirements are used to decide upon the details of the facility design itself. The facility design requirements lead in turn to the requirements for integration and repair, and these are used for maintenance and usability requirements.

These criteria are shown pictorially in Figure 1. This figure is intended to show how the design requirements for one part of the facility influence the requirements for the next area. It also shows how the requirements spread and become more extensive at the lower levels. The design is driven by the system under test, but the requirements for use and maintenance determine the ultimate usability and friendliness of the facility.

2.1 System Requirements

The requirements of the system to be tested are certainly the major drivers in the design of a HIL facility. Facilities are designed for one system, or at best, a family of systems, although additional capability should be built in to permit change whenever possible.

A good facility should be designed to have "better" specifications than the system under test. The facility design should be such that all of the performance or test limitations originate in the system under test and not in the facility. The speed, accuracy, precision, and capabilities of the facility are driven by the system to be sufficient to handle various system modes and capabilities. Eventually momentary considerations enter into the decisions affecting facility limitations. If the final design has limitations, they should be determined early in the development process.

The defined purpose of the facility becomes a very important driver in how the facility must be designed to meet the system requirements. A facility designed for system integration may have to handle only certain subsystems or modes and may be designed such that the possible system configuration and

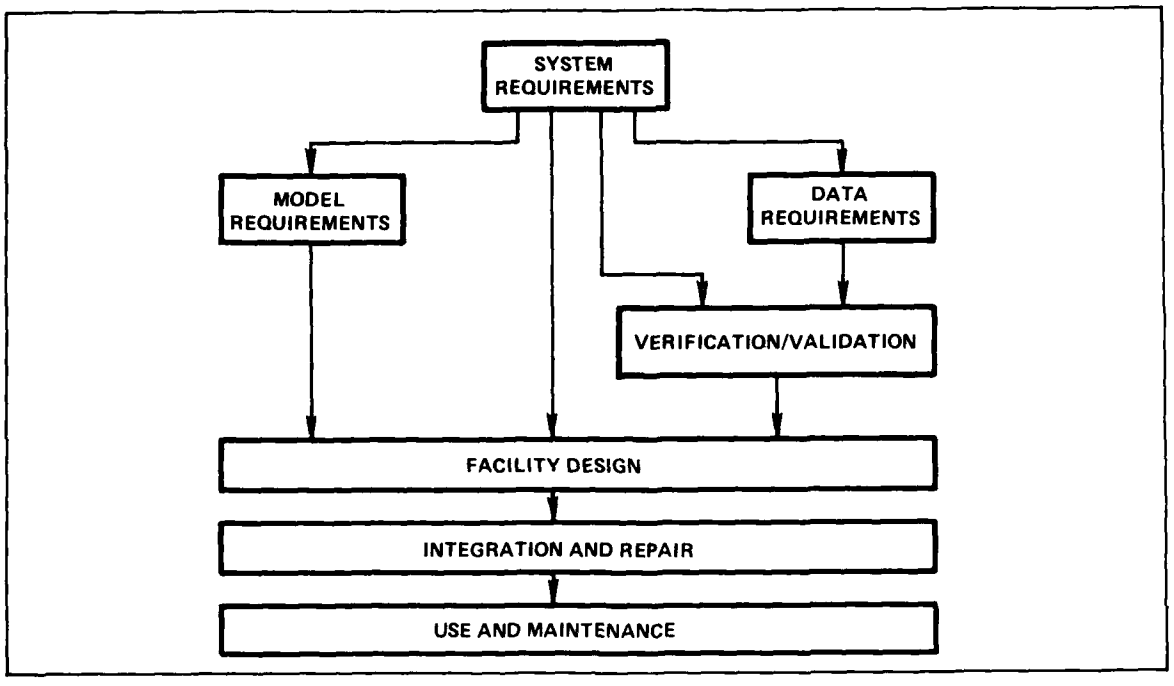

Figure 1. Design Criteria

tests are limited. A facility designed for system evaluation need only be concerned with environments and capabilities within the defined system performance bounds. A training facility must provide very accurate stimulus and response at the operator interface, but it need not be as accurate in other areas.

A facility whose purpose is to support system design needs to provide accurate stimuli and responses over the complete extent of the design region. This would include many types of environmental stimuli in varying combinations as well as accurate responses over the complete system envelope. The ability should be present to provide a wide range of error sources to the system.

In general, the facility should be designed with a view toward future upgrades and improvements because very few systems are static. Facilities should be designed with excess capabilities so that changes and improvements can be implemented quickly and easily.

2.2 Modeling Requirements

The modeling requirements for a HIL facility should be based on a large number of criteria including the system requirements already determined for the facility, envelope of testing, environments, and desired fidelity.

If not all of the system to be tested is present in the facility, models of the missing sections must be provided. This is the common case for missile systems where subsystems such as the rocket motor and warhead cannot be safely tested. Models need to be developed for as much or as little of the system as is determined necessary to fulfill the basic facility requirements. Options should be available that allow model or hardware selection for certain functions.

A typical example of model/hardware capability is the area of the missile control actuator section (CAS). The simulation normally has the CAS hardware in addition to the CAS model. Running with a real CAS puts unnecessary wear and tear on the hardware. The CAS models are very representative of the hardware and give excellent results. The actual CAS is used for integration and verification runs while the model can be selected for routine missions.

The other area to be modeled is the environment in which the system is to be tested. Models must be defined to provide the proper stimulus to the system under test, including both "signal" and "noise". Decisions must be made about how many and what type of system stimuli should be presented to the system. These should include signals that the system is designed to identify and measure, as well as error sources both man-made and natural that the system must deal with.

The definition of these models will determine the envelope of conditions for which testing in the facility can be considered valid. Once the types of models are determined, the next decisions to be made are on the fidelity of the modeling. The models should be as real as required to fulfill the basic facility requirements. The basic rule to remember is that the models should not be the limiting factor on determining system performance. In this area again, flexibility and generality should be strived for.

This is not to imply that the best model is always the most complex model. Overly complex models are costly and difficult to develop and implement. Integration and test efforts are made more difficult since the data is harder to understand and analyze. Modeling complexity should be balanced across the system and be consistent with the needs and purpose of the facility. Models should be flexible so that the level of complexity can be changed as the situation requires. Target models and clutter can be

detailed or relatively simple. In many instances, simple clutter models and constant cross section targets are adequate for an integration test, but a mission preflight requires a realistic complex target model and realistic clutter models.

Once the models are decided on, the "best" means of implementation must be determined. Models can be implemented in hardware, software, or a combination. The realism and high bandwidth of dedicated hardware need to be traded against the high design and implementation costs as well as the lack of flexibility. The flexibility of software needs to be traded against the availability and speed of the computer hardware and the possibly complex hardware/software interfaces.

For example, take the development of a target model for a missile simulation. Based on the system requirements, the modeling detail can be determined. Decisions can be made on the number of targets, the type of targets, and the important defining characteristics of the possibly many target types. Target characteristics should be independent wherever possible to allow the greatest operating freedom. Generic models with a large number of changeable parameters are to be preferred over many very specific models of particular target type. It takes about the same amount of time to define, build, and debug a generic model as it does one where all the parameters are hardwired into the software.

Once the models are defined, the means of implementation can be determined. For a target model, one possible implementation would have the basic model and logic contained in software on the main simulation computer. This software would generate the basic target parameters, i.e., position, velocity, range, and amplitude. This information could then be passed to dedicated facility mini- or microcomputers. These computers would perform the task of translating the signals into a form usable by the facility hardware, i.e., the right number of bits and format. They would also correct any facility imperfections due to hardware differences or known implementation inaccuracies, such as channel-to-channel differences. Finally, the signals would be passed to the dedicated facility hardware whose wide bandwidth and speed would generate the signals to be seen by the seeker.

2.3 Data Requirements

The simulation design must include the ability to provide sufficient data to perform its intended function. This could include integration, design verification, pre-and post-flight, and performance demonstration of both the simulation and system under test. The sources of data during simulation include test points, system telemetry and computer output, simulation computer digital output, strip charts, and recording of interface signals when applicable. The output must be tailored for specialized testing.

During integration, the data requirements focus more on the stimuli and signals that exist on the interfaces. Referring to Figure 2, the critical areas become the signals on the missile-to-simulation computer interface, the signals on the simulation computer, and the simulation computers to the environment models. Referring to the example of Figure 2, these signals would be at interfaces B and C. During integration it also becomes important to record specific levels within the system software to make sure that functions are being activated at proper levels. The data collected during integration must verify the path gains and continuity. The data must be inclusive enough to remove doubts about the performance of open loop functions.

The proper balance between real time data and delayed output (computer data reduction) must be such that the success of the test (meeting test objectives) is achieved. As an example, during an autopilot open loop test, the real time requirement would be to record in real time the autopilot input

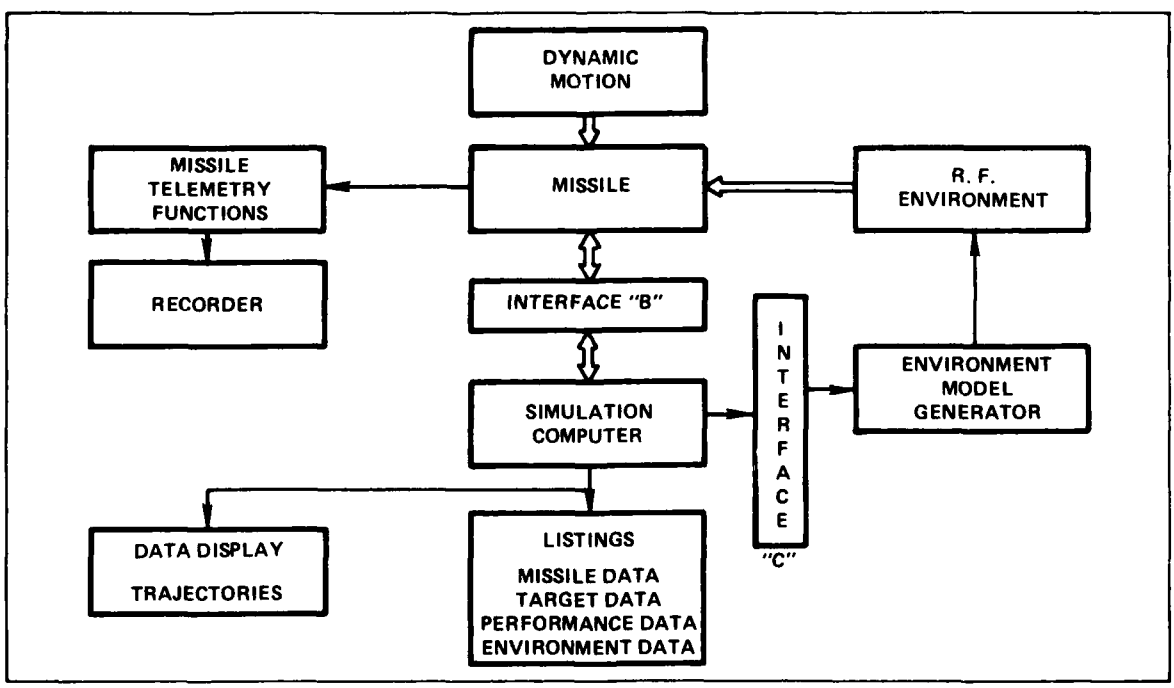

Figure 2. Simulation Data Sources

(acceleration command) and autopilot output (fin command). The details of the test (loop gain and path gain) are verified offline through analysis data.

An example of the real time and non-real time data required for an autopilot open loop test is shown in Figure 3. The acceleration command, fin command, and gyro input are recorded on a real time recorder, and provide a quick assessment of the autopilot test acceptability. The non-real time printout contains a listing of the real time quantities in addition to some intermediate quantities that can be used to evaluate the internal operation. These internal quantities are especially important if the response is not correct.

Data requirements change to some extent during design verification. The current philosophy is to obtain data for specific verification of internal software and hardware operations via specific verification test. The data requirement would impact real time system operation, but would not be exercised during normal operation, and would not have real time requirements.

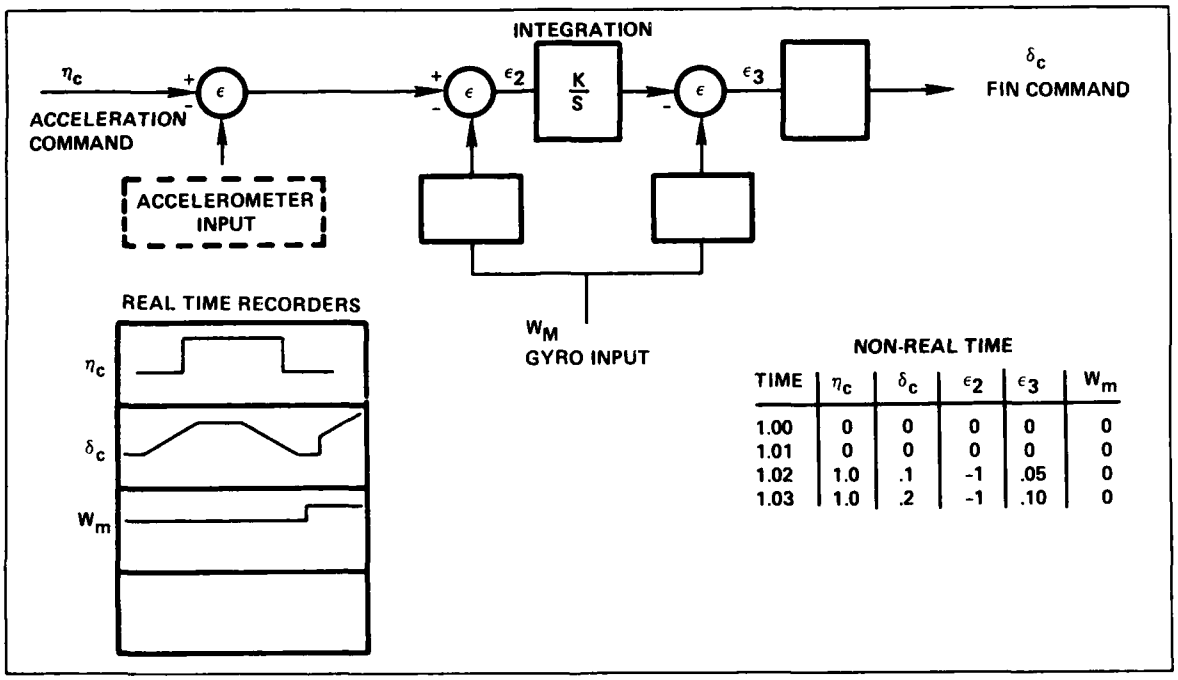

TIME	η_c	δ_c	ϵ_2	ϵ_3	W_m
1.00	0	0	0	0	0
1.01	0	0	0	0	0
1.02	1.0	.1	-1	.05	0
1.03	1.0	.2	-1	.10	0

Figure 3. Autopilot Open Loop Test with Real and Non-real Time Data

During pre- and post-flight analysis, the data requirements change to matching data from flight and providing enough data to assure that performance is acceptable. The data now will include the telemetry (T/M) from the missile under test which can be compared to flight T/M, and simulation computer data to match metric data from test range instrumentation (quick look radar, etc).

The typical data outputs contain 24 to 32 real time brush recorder channels that are typically the same channels that flight telemetry provides. The data is recorded at the same scale and chart speed as the flight data. The simulation brush recorder outputs can be converted to transparencies and be used to overlay the flight data. A similar process is used to record missile/target trajectory parameters on plotters that can be compred with the real time instrumentation from the test range. This process is shown in Figure 4.

During the performance demonstration phase, the simulation data will include missile T/M plus simulation data on missile trajectory and performance. The data will be used in the statistical processing of Monte Carlo sets to provide min and max values as well as miss distance histograms. The post processing programs used should have a great deal of flexibility. During evaluation, the need to examine internal software functions becomes important and changes to the data processing are made as required.

2.4 Verification/Validation

The verification/validation process is needed to establish that the simulation is a complete and a correct model of the system it represents. Having achieved the verification/validation objectives, the simulation is then ready to demonstrate system performance with fidelity over a wide range of environments.

In defining the verification/validation process, it is important to define the distinctions between these two terms. Verification is the demonstration that the individual simulation models match their hardware/software requirements and that the models were developed properly. Validation is demonstrating the ability of the simulation to generate data that correctly represents the system performance.

The steps in the process are detailed in the following paragraphs for a system that has a family of Six Degree of Freedom (6-DOF) simulations including an all-math model as well as a hardware-in-the-loop. The math model 6-DOF is verified against theoretical predictions, simple planar and 3-DOF

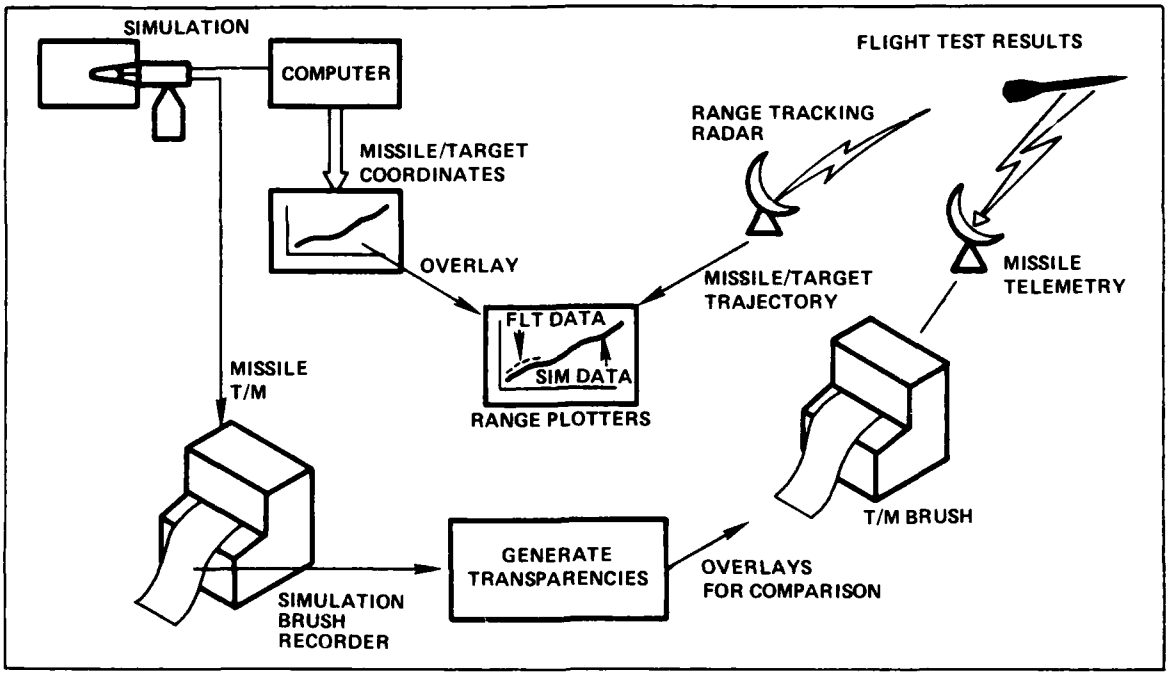

Figure 4. Simulation/Flight Comparison Data

simulations, system requirements, factory test data, and flight test data. The HIL is verified against the 6-DOF and subsystem specs and ultimately is validated against flight tests. The verification/validation steps are outlined in Table I.

The verification process begins with open loop measurements of autopilot path gain which are compared to factory specifications. The autopilot feedback loops are closed and responses are generated and compared to the 6-DOF. The next level of verification is with the seeker. Tests are made to define seeker characteristics such as noise versus signal strength, track quality, boresight error characteristics. These results are compared to seeker system specifications. The dynamic seeker tests are then made verifying seeker stabilization and dynamics. These results are also compared to specifications. Systems responses to line-of-sight rate motion are made and the response compared to corresponding 6-DOF results.

The next step in the verification process includes the generation and comparison of several baseline missions. The results up to this point imply verification of the 6-DOF and HIL. The validation process then compares simulation results with flight data.

TABLE I
VERIFICATION/VALIDATION TABLE FOR HIL

Function	Where Verified	Where Validated
Open Loop Autopilot	Performance Specs	Comparison to Flight Test/Factory Tests
Closed Loop Autopilot	Math Model 6-DOF Analytical Predictions	Comparison to Flight Test
Seeker Dynamics	Performance Specs	Comparison to Flight Test/Factory Tests
Seeker R.F. Characteristics	Performance Specs	Comparison to Flight Test
Guidance Mechanization	Performance Specs	Comparison to Flight Test
Guidance Loop Response Tests	Performance Specs Analytical Predictions	Comparison to Flight Test
Trajectories	Math Model 6-DOF Analytical Predictions	Comparison to Flight Test
Engagements		
Benign		Flight Tests
Maneuver		Flight Tests

The level of detail in the validation program depends upon time and funds available as well as the need for the simulation to play a major role in the system development. A program such as a major Army Ground-to-Air Missile System requires a great deal of detail in the validation. The HIL predictions are compared to flight and many parameters such as miss distance, trajectories, acceleration, body rates, boresight errors, seeker parameters, S/W parameters, and track quality are examined. In addition to system level comparison, the flight test data are used to obtain time histories of functions which were used as simulation drivers to enhance the validation process.

2.5 Facility Design

The facility design requires the introduction of hardware and software into the simulation without producing unacceptable effects on performance. The hardware must be of the required accuracy, bandwidth, dynamic range, and the software must be executed within an allocated time and have the required word size and program memory. This section will address the criteria used to accomplish the design.

2.5.1 Hardware Design

The simulation development approach at Raytheon consists of first developing an all-math model Six Degree of Freedom (6-DOF) digital simulation as shown in Figure 5. This simulation is very detailed but runs many times slower than real time, making statistical runs rather expensive. The 6-DOF digital version is converted to real time hybrid simulations where the high speed rotational models and computations are performed on an analog computer or a parallel processor digital computer such as an AD-10.

The hybrid version running at a very near real time is used to generate Monte Carlo peformance data. The hybrid models are common to the 6-DOF digital. The 6-DOF hybrid is then used to form the 6-DOF HIL where hardware is substituted for math models. The group of three simulations, as shown in Figure 6, becomes a family used to assist in the HIL design. A version of the 6-DOF hybrid or digital is further made to be a model of the hardware-in-the-loop facility, where the facility hardware is represented in the simulation as shown in Figure 7.

A typical missile HIL facility block diagram is shown in Figure 8. The main elements of the facility hardware include the system interfaces and simulation hardware including the flight table, target array, anechoic chamber, target generator, missile control console, and data collection/display.

The design approach is to take the 6-DOF digital model that represents the facility (Figure 7) and select hardware performance parameters based upon system performance. The basic system model is typically programmed on a system level digital simulation. The facility hardware is added to the simulation with characteristics as shown in Table II.

The initial design parameters are specified using analytical methods, with the final parameters selected using the modified system simulation. The procedure is to select a group of baseline cases that exercise the extreme dynamic ranges and compare performance with and without the facility hardware. The hardware parameters are varied until the performance degradation, if any, is within acceptable levels.

The design parameters of a three axis flight table (see Table III) are selected by the following process. The maximum pitch, yaw, and roll displacement, rates and accelerations are determined from the

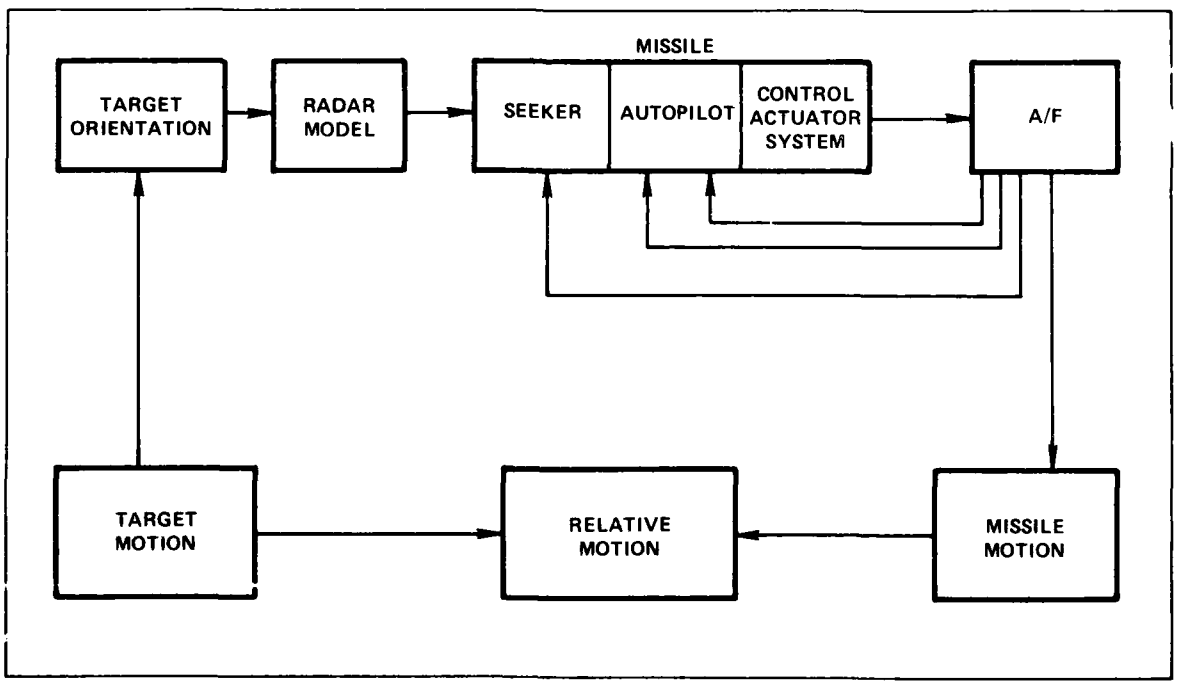

Figure 5. System Simulation Model

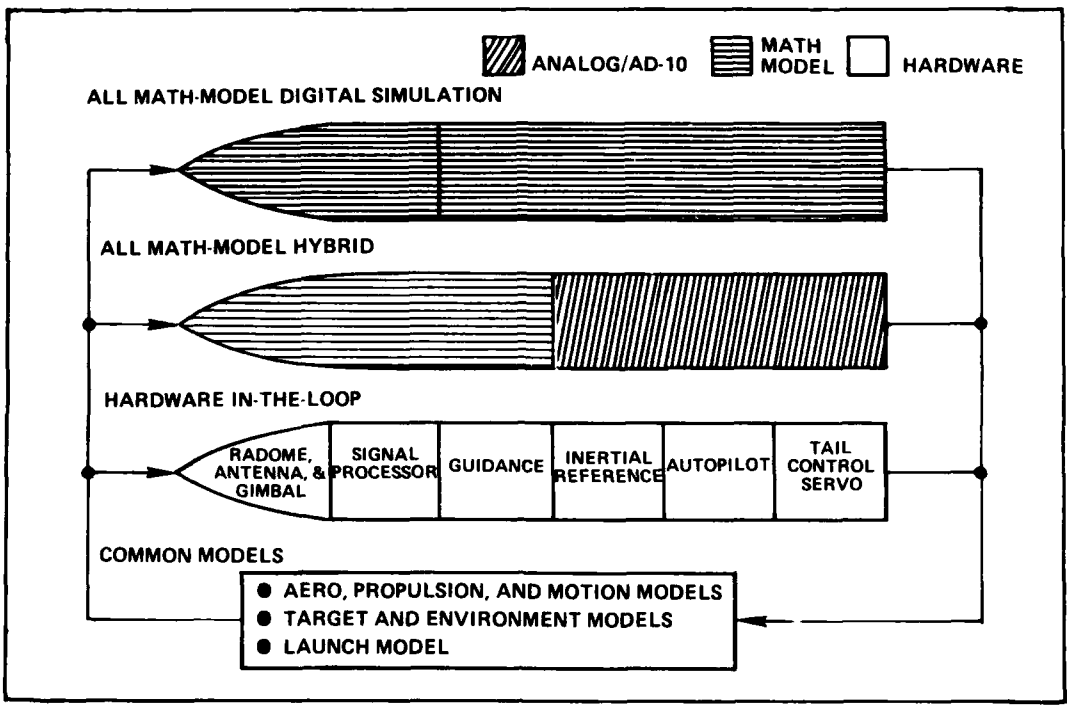

Figure 6. Simulation Evolution During Missile Development Cycle

system requirements. These values can also be confirmed from system simulation runs against different target threats. The physical load size is determined from physical properties of the missile. The allowable drift in the three axes must be about ten times better than the missile sensors and drifts. The allowable rate and position noise is also found by comparison to system noise levels. The table noise should be several times lower. The allowable flight table bandwidths are determined by modeling the response of the table in the modified simulation of Figure 7. The overall system performance is demonstrated with and without the table over a wide range of conditions, and the table parameters should not impact the system performance.

Once the parameters are selected, the design process continues. Several of the facility hardware items are fairly standard, but some are special one-of-a-kind such modulators, mixers, and switches. The design that ensues must consider ease of operations, reliability, methods for change, and ease of fault isolation. The design should use as many standard components as possible. The standard components could be similar to the system's components. The facility design should utilize as much of the system test equipment (or modification thereof) as possible.

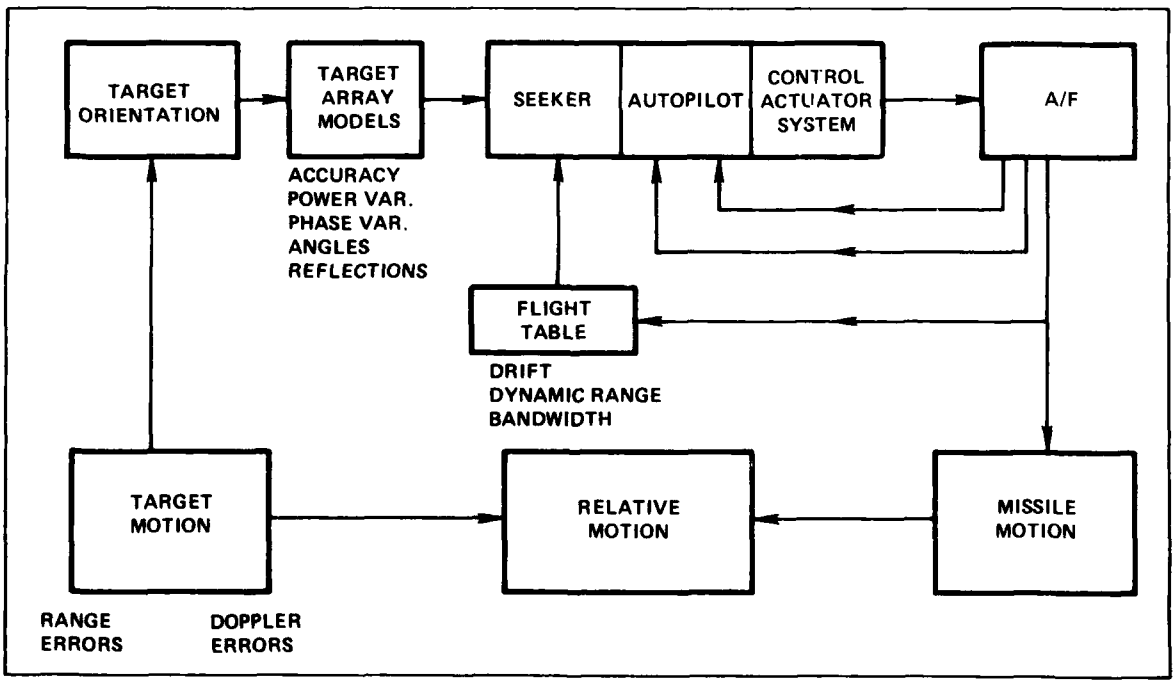

Figure 7. System with Simulation Hardware

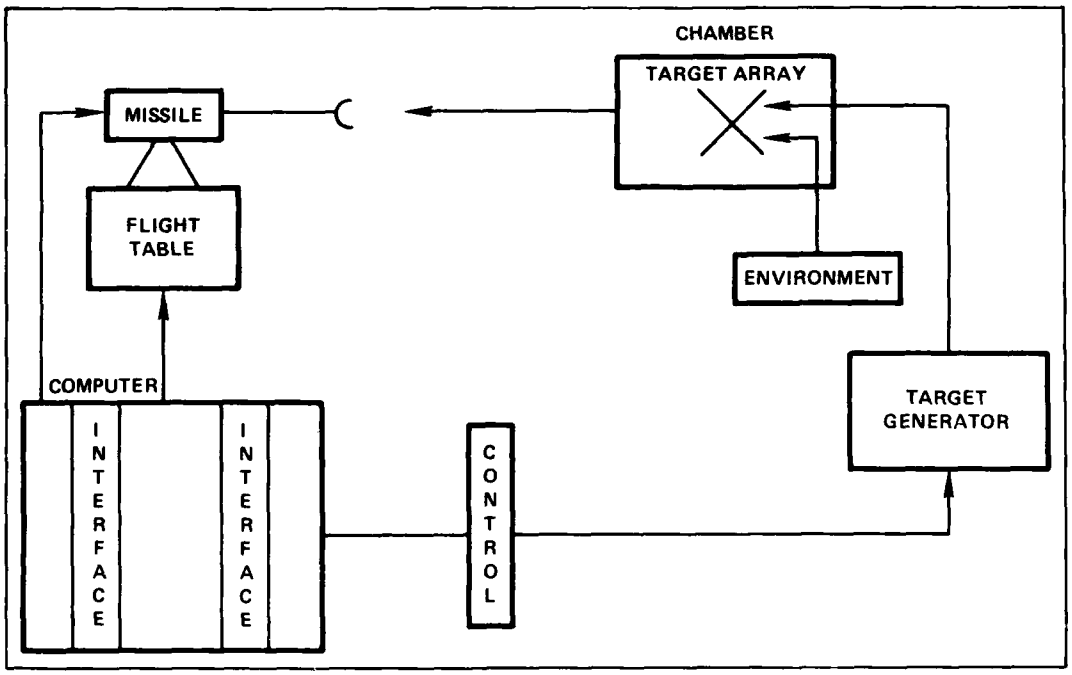

Figure 8. Facility Block Diagram

TABLE II.
FACILITY HARDWARE IMPACT ON SYSTEM MODELS

Hardware	Specification	Method
Interfaces	- Noise - Bit Size - Thruput	Model as Quantizer Plus Noise
Target Array	- Biases - Steering Accuracy - Power Variations - Phase Variations	Introduce Target Position Errors, Cross Section Variations, and Phase Errors
Anechoic Chamber	- Reflection Levels - Size of Quiet Zone	Models as Multipath Reflections
Target Generator	- Range Delay - Doppler - Power Level - Precision and Accuracy	Models as Variations on Target Waveform in Range Doppler and Power
Missile Control Console	- Power Requirements - Voltage Requirements - Fault Isolation - Protection	Evaluate Effects of Power, Voltage Variations, and Verify Test Sequence

TABLE III
FLIGHT TABLE DESIGN PARAMETERS

- Maximum Pitch Yaw and Roll Displacements
- Maximum Pitch Yaw and Roll Rates
- Maximum Pitch Yaw and Roll Acceleration
- Physical Load Size Length, Diameter, Weight
  Center of Gravity
  Moments of Inertia
- Equivalent Velocity and Position
- Bandwidths and Damping Factors
- Allowable Drift in Pitch, Yaw, and Roll
  Rates and Position
- Allowable Rate and Position Noise
- Rate and Position Readout Accuracy

2.5.2 Software Design

The software for a HIL facility must be designed, built, tested, and verified with just as much care and effort as the facility hardware. With modern computer systems available, it is very common to have more of the facility function contained in the software than in dedicated hardware. The software is probably more complex than the hardware, and the total software could cost more than the hardware to design, code, and test.

The design process for the facility software should consider system, data modeling, validation, and verification requirements. The facility software must work with the system hardware and software as well as the facility hardware. It should be designed for high visibility and testability. The capability for subsystem testing should be built into the software with provisions made for integration, test, and repair.

The software should be made highly modular. This facilitates the development and testing and allows the software to be restructured more easily if required. It also allows for integration and subsystem testing with simple models while providing as much model complexity as is necessary.

2.6 Integration and Repair Requirements

The facility design must provide the visibility needed to perform integration testing. As noted earlier, the visibility during integration focuses more on interfaces and internal operation than the higher level visibility needed for performance operation. The facility design must also have the needed flexibility to inject test stimuli as needed for testing portions of a system. The test stimuli are often needed to determine if particular level sensitive decisions are being made properly, such as detection thresholds and signal levels which trigger various system logic patterns.

The HIL test facilities are playing an increasing role in the integration of new systems. As the systems become more dependent on embedded software, the integration testing becomes more complex and so has the requirement to provide real time inputs to the system under test. The HIL facility is a natural generator of the real time inputs needed for system integration.

As the integration process continues with missile loops being closed, it is imperative that a set of baseline data of open loop, subsystem and system closed loop tests be made available as early as possible. The baseline responses become the data base for the fault isolation repair cycle. During systems evaluation testing, baseline testing is performed on a daily basis to assure the HIL readiness. If differences are noted, then the testing falls back to lower level integration tests to help the fault isolation process. As problems are identified with the HIL equipment the effective repairs should be completed quickly. In many instances the facility can be put back "on-line" quickly but not with full capability. The facility design must address operation in a contingency mode.

2.7 Facility Use and Maintenance

Design decisions made in the area of facility maintenance and usability determine how productive and cost-effective the facility will be over time. HIL facilities tend to spend a relatively large portion of time in either repair or upgrade. Good design practices should minimize the difficulty of these tasks.

A HIL facility should be designed with a maximum amount of visibility into signals and functional units. The facility should be designed to allow automatic fault detection and isolation to the greatest extent possible. Test points and intermediate outputs should be provided in both the hardware and software.

In general, the means of performing the original integration testing should be built into the unit without requiring extensive additional hardware and software. This allows for quick maintenance and fast reintegration of the facility after repair.

If possible, graceful degradation of facility capabilities should be designed in to avoid bottlenecks or single paths whose failure will cause the entire facility to shut down. Much useful work can be done in a facility with limited capability while the broken equipment is being fixed. The design should allow the use of subsystem testing while full system capability is unavailable.

A facility design should consider the people who will work in it, with the equipment. A sufficient working area should be provided for notebooks and data. Test points and data points should be readily available. All necessary facility documentation should be kept close at hand. Data recording and data reduction equipment should be easily available.

The personnel running the facility need enough visibility into the system being tested and the test facility to ensure that all processes are working properly. This information needs to be available in real time.

3. SUMMARY

This paper presents the design criteria for a hardware-in-the-loop simulation facility. The major design drivers have been identified. The rationale that should be utilized for decisions for each of the design drivers has been presented. Since every hardware-in-the-loop facility is unique, the decision guidelines presented have by necessity been rather broad. Several tailored examples have been presented for a missile test simulation facility. The concepts presented, however, should be usable over the broad range of HIL simulation facilities.

BIBLIOGRAPHY

1) H.L. Graves, V.F. Difini, W.L. Goodall, "Validation of a Complex Guidance Simulation," **Proceedings of 1981 Summer Computer Simulation Conference**.

2) W.C. Morton, "Cost Effectiveness of Simulation Validation," **Proceedings of the 1981 Summer Computer Simulation Conference**.

3) M.E. Sisle, "PATRIOT Guidance Test and Simulation Facility," **Electronic Progress**, Vol. XXII, No. 4, Winter 1980.

4) W.C. Morton, "Simulation Validation," **Electronic Progress**, Vol. XXII, No. 4, Winter 1980.

5) M.E. Sisle and E.D. McCarthy, "Hardware-in-the-Loop Simulation for an Active Missile," **Simulation Technical Journal**, Vol. 39, No. 5, November 1982.

6) S. Powers and J. Smith, "System Simulation for the "80's," **Electronic Progress**, Vol. XXII, No. 4, Winter, 1980.

7) D. Hughes and R. McKenzie, "A Semiactive Missile Hardware-in-the-Loop Simulation," **1982 SCSC**, Denver, CO.

8) "History and Evolution of Six Degree of Freedom (6-DOF) Hardware-in-the-Loop Missile Simulations," **1984 Simulators Miniconference**, Norfolk, VA, April, 1984.

COST EFFECTIVE SIMULATION FOR MILLIMETER WAVE GUIDANCE SYSTEMS

by
Vance H.Maples and George A.Eastman
Boeing Aerospace Company
Mail Stop 82-22
PO Box 3999
Seattle, WA 98124, USA

SUMMARY

The introduction of millimeter wave (MMw) active-passive, air-to-surface missile seeker systems to counter the European armor threat has increased the need for simulators to evaluate the performance of this class of seeker. Existing simulation techniques have not proved to be cost effective, and are generally unable to obtain sufficient target spatial position control at millimeter wave frequencies to ensure high fidelity simulations. The conventional approach to simulating a target for seeker testing is to build a transponder which receives the transmitted signal from the seeker, delays it to represent range, modulates it to simulate the intended target signature, and retransmits it through an antenna array which positions the target spatially. Target modeling and position control are implemented using simulation components at the radar frequency. A new concept for target simulation for FM/CW modulated radar sensors, uses the signal from the seeker transmitter to illuminate an array of target antennas. This received signal at the target array is mixed with a low frequency modulation signal and re-radiated to the seeker. Target amplitude and spatial position are controlled with the low-frequency modulation signal. Most high-cost radar frequency components are eliminated from the simulator implementation. This radar scene simulation technique provides a lower cost simulation method for evaluating FM/CW modulated millimeter wave seekers. This technique is equally effective for pulse modulated seeker simulation when a millimeter wave illuminating source is added to the system. In either case, it significantly reduces the high-cost/marginal-performance millimeter wave hardware required in the simulator and can be applied to evaluation of both active and passive seeker modes.

1.0 BACKGROUND

Military hardware is becoming increasingly sophisticated and costly. During the development of these complex systems a cost-effective means to test, evaluate, and refine the performance capability is mandatory, as is a side-by-side comparison capability between competing systems. It is very expensive to build complete prototype systems and subject them to performance tests to determine compliance with requirements, particularly where missile tests or system tests to destruction are involved. Many such tests may be required to obtain a sample size large enough to be statistically significant and repeatable.

Hardware-in-the-loop (HIL) simulations provide a cost-effective method to emulate target/environment/-engagement scenarios, and battle management parameters, as well as to test and evaluate related systems or subsystems during development and operational program phases. The tests can be rigidly controlled for repeatability and can exercise a system throughout its total performance range. The continued evolution of tactical missile guidance technology has resulted in an expansion in laboratory facilities capable of testing these systems in a realistic, nondestructive environment. HIL flight simulation has been demonstrated during the past decade to be a realistic and cost-effective tool for the development, test, and evaluation of missile radio-frequency (RF) guidance systems. As the emphasis in sensor frequency bands and waveforms shifts from microwave to millimeter wave frequencies, traditional concepts in the design of RF simulators are proving incapable of providing test facilities applicable to a wide range of missile systems without the use of expensive, state-of-the-art equipment.

In particular, current emphasis within the technical community is being placed on the development of millimeter wave (MMw) guidance technology for tactical air-to-surface and surface-to-surface weaponry, as illustrated in the battlefield scenario of Figure I-1. These systems, while offering certain performance advantages over standard radar and electro-optical systems, pose considerable challenges in the area of system simulation. Specifically:

- The wide band of millimeter wave frequencies of potential interest (30 to 300 GHz) precludes the use of a single set of radar-frequency simulation hardware because of bandwidth limitations. An individual simulator implementation could be required for each "window" in the MMw spectrum. (See Figure I-2).

- The current state-of-the-art in MMw technology is such that components are relatively high in cost and performance limited compared to microwave technology.

In order to develop cost-effective simulators for closed-loop evaluation of MMw guidance systems, techniques must be developed which minimize the use of millimeter wave components in their implementation.

The conventional approach to simulating a target for seeker testing is to build a transponder which receives the transmitted signal from the seeker, delays it to represent range, modulates it to simulate the intended target signature, and retransmits it through an antenna array which positions the target spatially. For fine position control within a "selected set" of adjacent antennas, the relative amplitude and phase of the "selected set" are controlled using expensive control hardware at the seeker frequency. Several simulation systems using this principal of operation are currently in use within the U.S. Department of Defense and private industry. For microwave and more so for millimeter wave frequencies, obtaining sufficient amplitude and phase control for target spatial positioning is very expensive with the state-of-the-art in equipment.

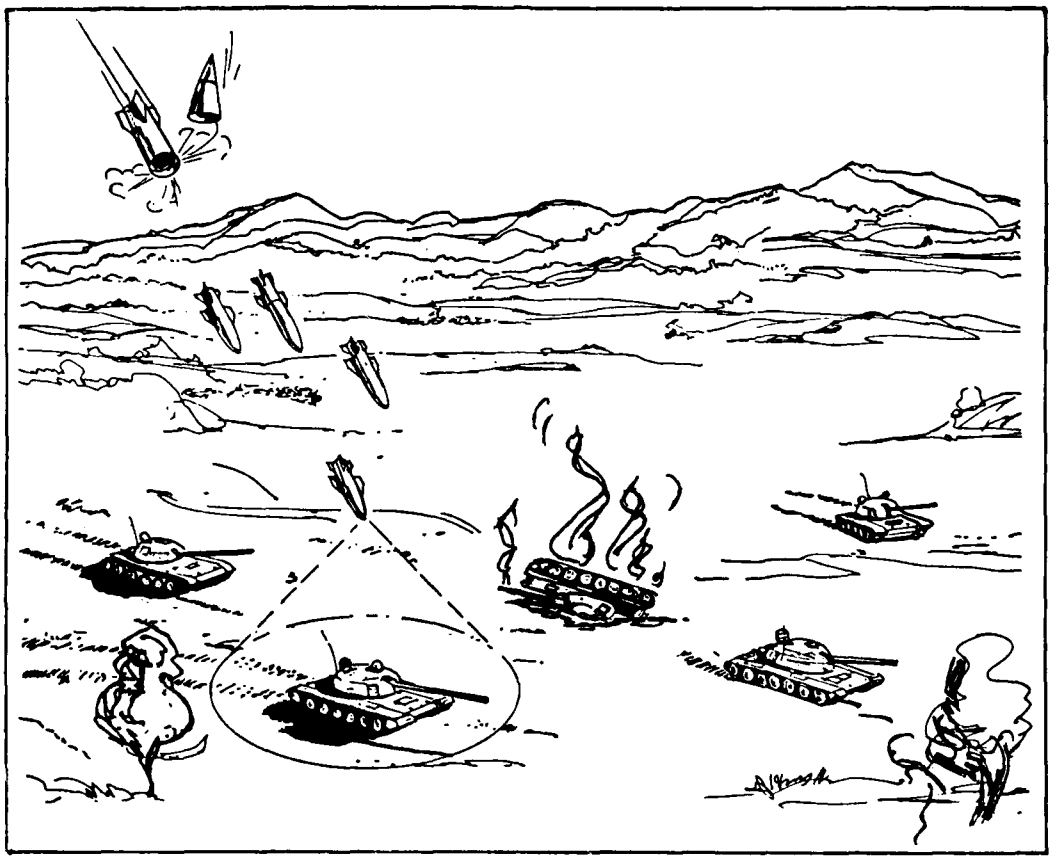

FIGURE I-1 MILLIMETER WAVE SIMULATION SCENARIO

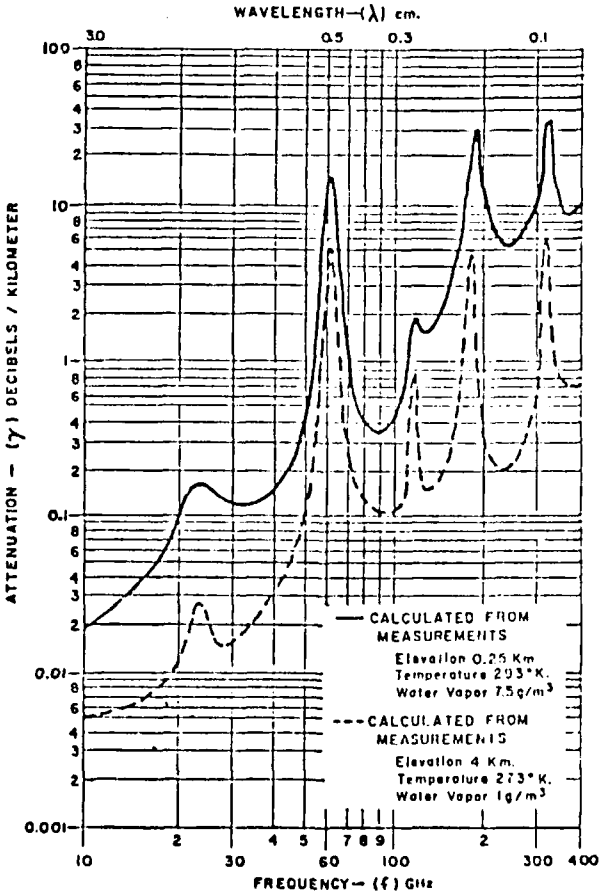

FIGURE I-2: CALCULATED COMBINED WATER VAPOR AND OXYGEN ATTENUATION

A new concept for target simulation of FM/CW modulated radar sensors uses the signal from the seeker to illuminate the target array. The unique feature of this approach is that the reflection off the array has the added modulation of the seeker's IF. The amplitude of the target modeled is controlled by adjusting the amplitude of this low frequency signal. The spatial position between antennas is controlled by selectively time multiplexing the modulation signal at the appropriate target array antennas. An indication of range shift is accomplished by changing the frequency of the amplitude modulation. For pulse modulated radars, a separate illuminator illuminates the target array at an offset frequency. This offset in frequency becomes the simulator intermediate frequency (IF) when mixed with the seeker transmission which is then delayed in time to simulate range and applied to the modulators at the selected array antennas. This IF signal modulates the offset illumination signal to produce the required millimeter wave target signal. The only radar frequency components employed are the antennas and modulators; precise microwave or millimeter wave control components are not required. For millimeter wave systems, cost savings for this new concept over traditional methods could be as much as an order of magnitude.

2.0 EXISTING GUIDANCE SIMULATION TECHNIQUES

The RF homing missile guidance and control simulation problem is to realistically create an RF target and background environment, subject the RF homer to this environment, close the missile guidance loop around this RF homer and perform real-time hardware-in-the-loop (HIL) guidance tests which result in miss distances representative of actual missile test flights.

Early simulation techniques were done on a piecemeal basis. Tests were run on control surface actuators, wind tunnel tests were performed for aerodynamic information, open loop RF homer tests were performed, measurements were made of targets and all were then mathematically modeled; these models were then put in a computer and a missile-target engagement scenario flown. The primary output was the system miss distance. This technique was characteristic of the period up to the middle 1960's, and generally correlated poorly with flight test results. In the middle of the 1960's Boeing developed it's Terminal Guidance Laboratory (TGL). This laboratory employs a 24' x 24' x 60' anechoic chamber, a 16 x 16 element electronically steerable target array at one end of the chamber presenting a target field-of-view of 30° and a full scale hydraulic flight table to mount the missile guidance hardware at the other end of the chamber. Direct comparisons were made between actual missile flights and simulated flights. The results clearly demonstrated the validity of this type of simulation.

The basic concept for this class of hardware-in-the-loop guidance simulators is illustrated in Figure II-1. This system tests the full guidance section of the missile, ie: radome, sensor, processor, etc., while modeling only those elements of the system which can be approximated in computer software. Simulation fidelity is enhanced over previous techniques by two factors: (1) the most complex and nonlinear element in the system, the sensor/processor unit, can be tested in essentially an operational configuration; and (2) the sensor is exercised using radiated signals rather than RF or IF injected target signals, eliminating sensor, antenna and radome modeling errors. The simulation "closes" the guidance loop for the simulated engagement allowing for real-world interaction between the guidance system and its environment. Signature data drives the RF generation subsystem, which produces modulated RF signals representative of the target and its associated background radiation. The position control system spatially positions these signals on the array for presentation to the system under test. Figure II-2 shows how the target is positioned within the quad of antennas. The array is carefully phase-adjusted so that the signals radiating from each antenna are of equal phase as shown in the figure. Computer controlled attenuators are then adjusted to control the relative amplitude of the signals radiated from the four antennas, placing the apparent phase center of the target at the desired location within the quad of antennas. By properly adjusting the signal amplitudes, the target is moved to any desired position within the quad of antennas at very fast update rates.

The success of this technique in the TGL led to the development of comparable laboratories for the U.S. Army, Navy, and Air Force (See Figure II-3). The Army's Radio Frequency System Simulator (RFSS) became operational in 1975, with higher accuracy, more sophisticated RF models, and a larger spatial field-of-view array than the TGL. The Navy's Central Target Simulator (CTS) was completed in 1979, oriented toward ECM development with a very wide horizontal field-of-view. The Air Force Radio Frequency Target Simulator (RFTS) came online in 1981, using a smaller array with highly sophisticated RF modeling capability. Basic performance characteristics of these four simulators are compared in Figure II-4.

3.0 MILLIMETER WAVE RADAR SCENE SIMULATOR

The Millimeter wave (MMw) simulator is similar in configuration to the microwave simulators discussed in Section 2 in supporting the real-time HIL simulation evaluation of missile guidance effectiveness. The significant difference is in the target spatial position simulation. This concept uses an array of MMw antenna modules (see Figure III-1)which are space fed. The target and electromagnetic background signals are modeled at low frequencies (IF) and applied to a selected group of antenna modules for conversion to MMw target signals using the MMw space feed excitation. A target and/or background spatial location is controlled to much less granularity than the array antenna spacing by high-speed time multiplexing, or time weighting, of adjacent antennas. The active antenna group is designed to lie within the seeker antenna field of view. For FM/CW modulated seekers, the seeker may provide the space feed excitation to the target array. For pulse seeker systems, space feed excitation is provided by an external MMw illuminator. A more detailed description of the system follows.

The millimeter wave radar scene simulator uses frequency translation at an antenna terminated by a mixer and extends this to an array of antennas for dynamic electronic controlled target position simulation (see Figure III-1, right-hand side, for concept illustration). The radar target scene simulator is shown integrated into the target simulator system envisioned for evaluation of MMw guided weapon systems in both open-loop and closed-loop modes. Achievable target position accuracy exceeds one milliradian and position rates are in excess of missile system requirements (where practical mechanical positioning target systems are too slow to simulate target glint characteristics).

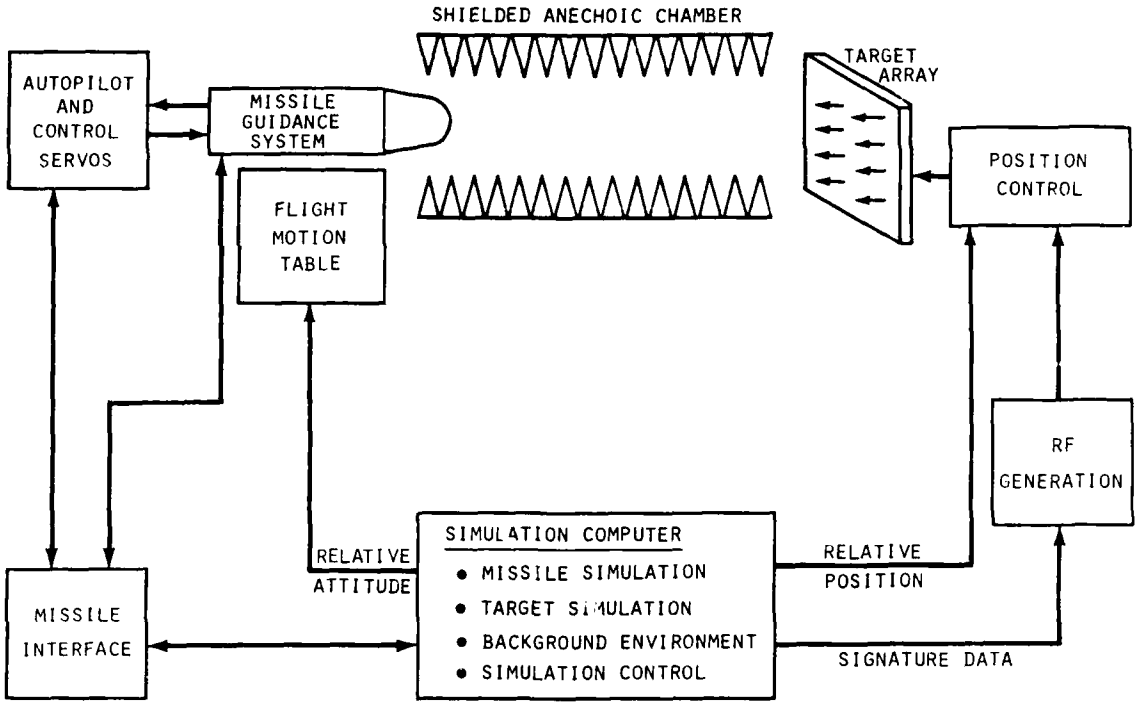

FIGURE II-1: SIMULATOR BLOCK DIAGRAM

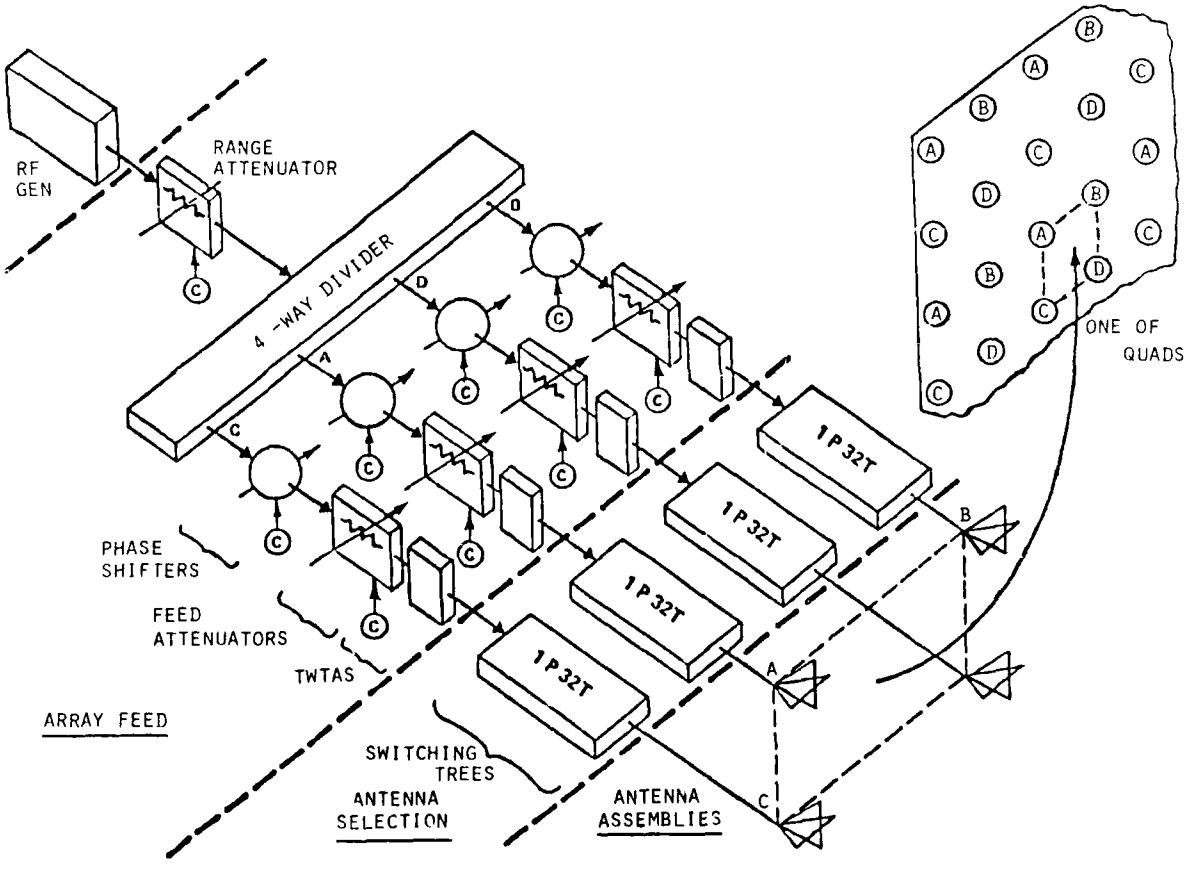

FIGURE II-2: TYPICAL POSITION CONTROL IMPLEMENTATION

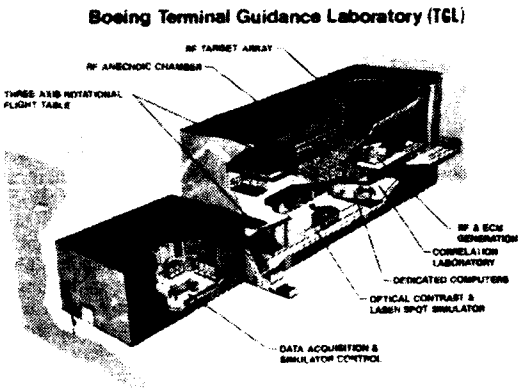

Terminal Guidance Laboratory (TGL), 1968

Radio Frequency System Simulator (RFSS), 1975

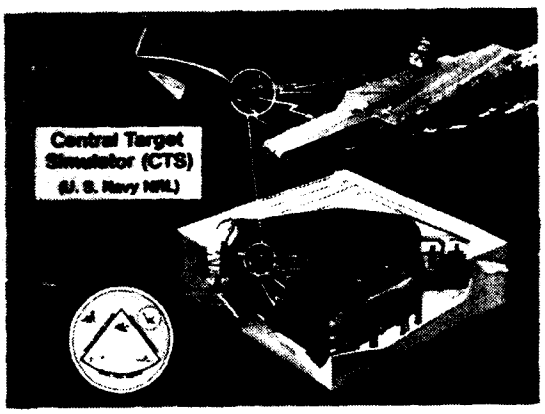

Central Target Simulator (CTS), 1978

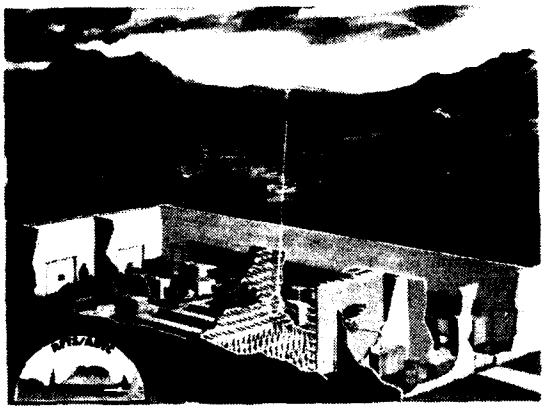

Radio Frequency Target Simulator (RFTS), 1981

FIGURE II-3: HARDWARE-IN-THE-LOOP SIMULATORS

FIGURE II-4: RADIO FREQUENCY SIMULATOR COMPARISONS

PARAMETER	BOEING TGL	MICOM RFSS	NRL CTS	AFATL RFTS
Frequency, GHz	2-12	2-18	8-18	8-18
Field of View	$30^0 \times 30^0$	42^0	$80^0 \times 20^0$	5^0
Effective Radiated Power, dBm	10	20	30	45
Position accuracy, mr	5.0	0.3	1.5	1.0
Number of targets	2	4	2	8
Polarization	Linear	Elliptical	H/V Linear	H/V Linear
ECM	Limited	Yes	Yes	Limited
No. antennas	256	550	225	8

The key element is the space feed array antenna module. This device consists of an antenna attached to a mixer (center of Figure III-1). The antenna provides signal gain for both the space feed MMw illumination and the frequency translated MMw output. The mixer is a nonlinear device that combines the MMw illuminator signal with the low-frequency IF drive signal and produces the frequency-translated MMw output. The space feed capability of this design allows large arrays of these devices to function as an MMw scene or point target without any MMw interconnection between the individual elements.

Two basic mixer types are suitable for the FM/CW seeker illuminated case. The simpler mixer consists of a single diode element matched to a waveguide horn antenna. This single-diode mixer will produce both a sum and difference sideband. The two translated outputs will appear to the radar seeker as two targets separated by a range equivalent to twice the distance from the radar seeker to the array antenna. A single sideband mixer is used when the second target signal would cause interference with the primary target output. The single sideband mixer is fabricated using a minimum of two mixers interconnected by phase shift networks. The combination at the antenna of the phase-shifted and phase-balanced frequency-translated outputs from the two mixers enhances the primary target output while canceling the second target output. The conditions required for this combining effect are equal amplitude conversion from each mixer, 90-degree phase difference between the two IF drive inputs, and 90-degree phase difference between the MMw input or output that passes through the two mixers. Because MMw input and output share a common path, a 45-degree phase shift in one mixer path produces the required 90-deg effect.

The FM/CW signal format consists of a continuously transmitted MMw signal that is frequency modulated. The FM usually consists of a linearly swept frequency shift (see Figure III-2). The seeker uses the frequency difference between the transmitted signal and the received echo to measure target range. The frequency difference is an IF signal that results from mixing the current transmitter frequency with a previous transmitter frequency that has been delayed by the round trip time to the target and back. The FM/CW radar seeker signal format is directly compatible with the space-feed frequency translating array. The simplest simulator uses the FM/CW seeker transmitter to provide the space-feed illumination to the array. The array elements, frequency-translate the illumination signal by the seeker IF and reradiate it back to the seeker. An IF is supplied that is identical to that which the seeker would normally see for a target at the range required in the simulation.

The pulse radar signal format is an MMw pulse followed by a quiet interval. The seeker measures range by measuring the time interval between the transmitted pulse and the target echo. The pulse radar signal format can be accommodated to the simulator with a separated space-feed illumination source located near the seeker. The frequency of the illumination source is offset from the seeker-transmitted MMw frequency to eliminate seeker interference. This frequency offset becomes the simulator IF. An IF sample of the seeker pulse is time delayed from the seeker transmitter pulse. The time delay is determined by the range required in the simulation. The array mixer translates the illuminator MMw frequency back to the seeker transmitter frequency, thus allowing the seeker to use the simulated target echo.

Targets and the environment are modeled by a computer control system that drives the array of antennas located in front of the radar seeker. The operating mode of the system is dictated by the seeker type. Pulse or FM/CW seekers use the separate illuminator with a fixed IF drive frequency to the array. FM/CW seekers may use a simpler range-controlled intermediate drive frequency. The amplitude of the IF drive is controlled by an attenuator that simulates range-related signal propagation losses and target cross section. The IF drive is routed to a group of adjacent array antenna elements that encompasses the simulated target position location on the face of the array. The multithrow switch sequentially scans the signal among the selected antenna elements. The scan rate is set above the response limits of the angle tracker circuits in the radar seeker, which causes the seeker to see only the average target position. The average target position is placed at the simulated target position by varying the switching time ratios (time weighting) of the antenna group scan cycle. Target range extent, scintillation, glint, and environmental clutter are represented as frequency and amplitude modulation on the reflected signals. Multiple targets are generated by time-multiplexing the drive to the array of antenna elements.

The seeker response to the target motion presented on the array is evaluated by the computer system. The response data can be used to develop seeker open-loop performance data. With suitable simulation of associated missile control and flight parameters, a real-time closed-loop flight can be accomplished producing target miss-distance data. While this simulation technique is equally applicable to evaluation of seekers at frequency bands other than MMw, the cost reduction is most significant for MMw applications. This simulation concept has been validated by laboratory tests in the Boeing Terminal Guidance Laboratory, at Kent, WA.

CONCLUSIONS

Simulating target range and angle by appending an AM sideband to the reflection of an FM/CW sensor carrier signal and time-multiplexing the signal among adjacent antennas is a practical solution to the near-term MMw flight simulation problem. This technique can readily be extended to pulse radar systems (coherent and noncoherent) by adding a separated space-feed illumination source and range delay device. With suitable modifications it can grow to accommodate more complex radar features, including polarization diversity, simultaneous active/passive operation, and pulse chirp, as well as ECM/ECCM test and evaluation applications. Minimal simulator modification is required for adaptation to different MMw frequency bands, since only the antenna modules and illuminator operate at MMw frequencies. This technique results in a significant reduction in the use of expensive, state-of-the-art MMw components to implement guidance simulators, making nondestructive testing of MMw seekers immediately justifiable and feasible.

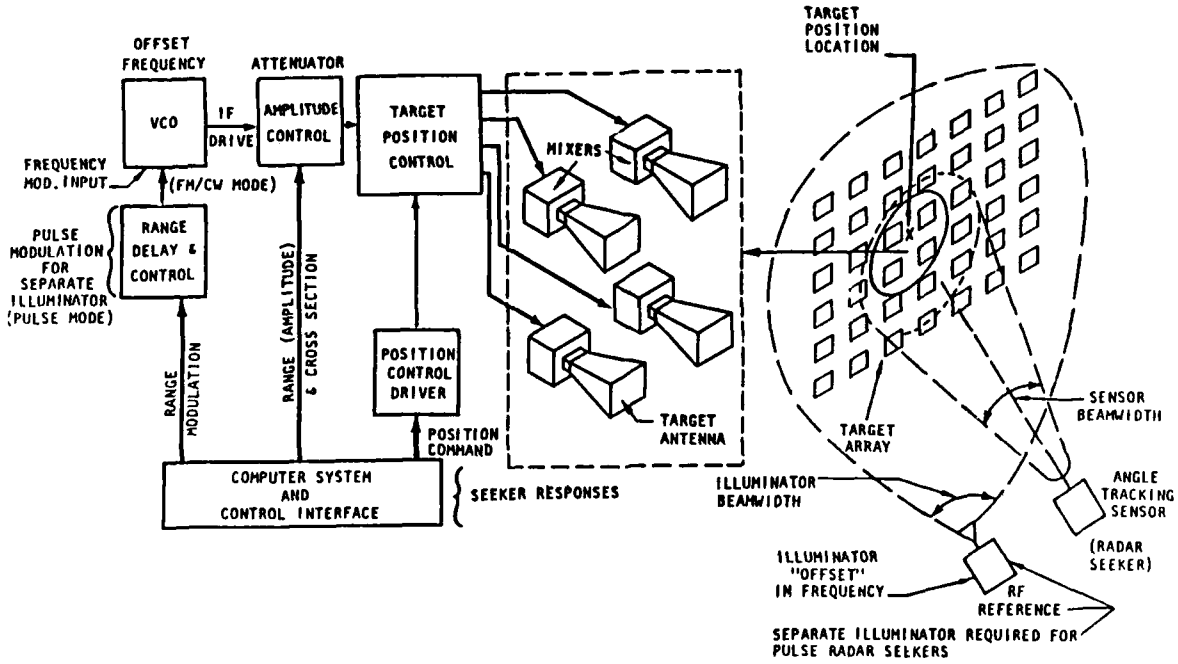

FIGURE III-1: RADAR SCENE SIMULATOR

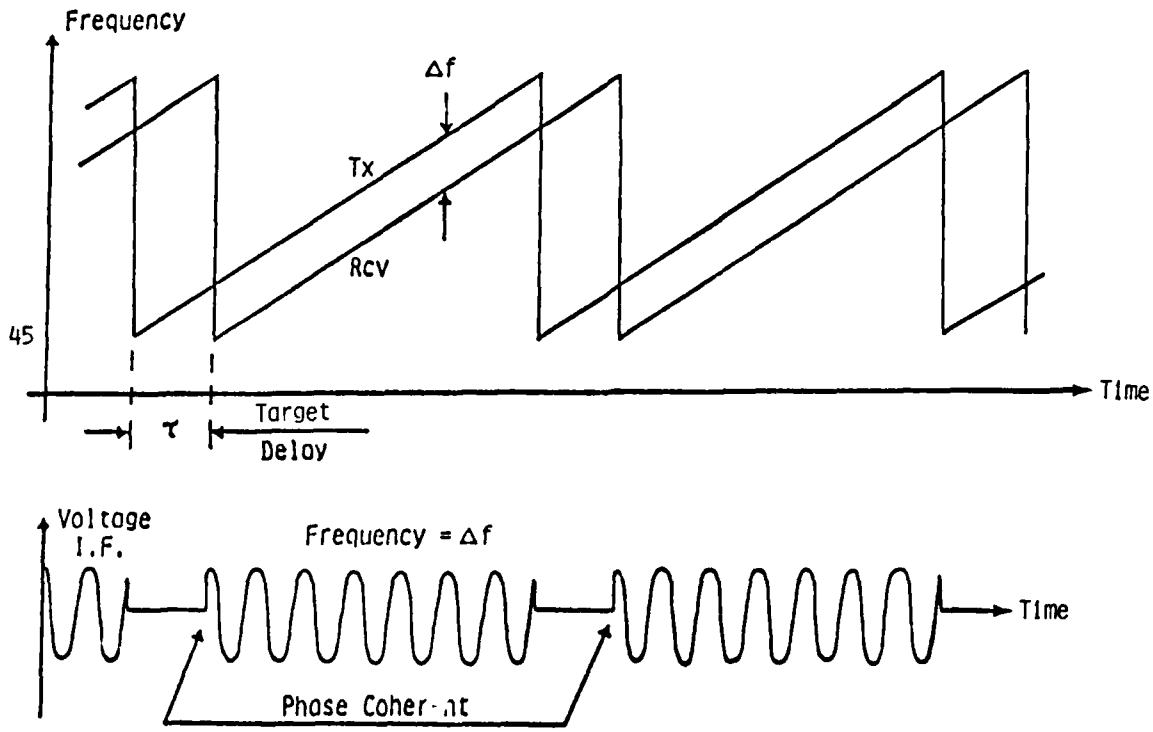

FIGURE III-2: TYPICAL FM/CW SIGNAL FORMAT

RANGE DELAY TECHNIQUES FOR RADAR TARGET SIMULATORS

by

Leland C. Buse

BOEING AEROSPACE COMPANY
P.O. Box 3999
Seattle, Washington
98124

SUMMARY

It has been recognized that Radar Guided Seeker and countermeasure development using flight test as a primary evaluation tool is costly and insecure from interception of signal and telemetry emenations. Radar Target Simulators have been developed which provide the capability both to evaluate actual radar guided seeker hardware and software and to evaluate Countermeasures against the actual seeker hardware in a secure environment. Experience with these simulators has demonstrated that with adequate simulator hardware, valid closed-loop performance evaluations can be conducted which will accurately reflect flight test performance. A critical issue in the implementation of such systems is the simulation of radar pulse range delay. This must be accomplished with sufficient fidelity to represent a range-delayed target or ECM signal credible to modern seeker signal processors.

In this paper, various range delay techniques as applied to Radar Target Simulators are presented. In particular, a digital approach to the solution of the range delay problem is developed from basic concepts through actual hardware implementation.

1. RADAR TARGET SIMULATORS

It is possible to test radar-guided seeker hardware and software, and to estimate the probable system performance using Radar Target Simulators. Seeker performance can be evaluated against complex targets, clutter, multipath, or ECM in a fully closed loop simulation, or the seeker response can be tested using various stimulii in open loop tests. These simulators provide a low-cost way to evaluate new guidance, ECM or ECCM concepts, to preflight missile hardware and software, to support flight test evaluations, and to measure ECM/ECCM effectiveness

The principle concept used to implement these Radar Target Simulators is shown in Figure 1-1. It includes a closed shielded chamber to exclude all ambient signals and contain all radiated signals and is lined with microwave anechoic material to remove all stray reflections. A signal source is placed in one end of the chamber and the seeker under test is placed at the opposite end of the chamber. For full, closed loop simulation, the signal source is an antenna array which provides two-axis angular steering of the radiated signal. The seeker is mounted on a 3-axis flight table which provides simulated missile body angular motion. A similar arrangement can be used for open-loop seeker characterization, using only those simulator elements necessary to measure specific seeker responses. This type of testing reduces simulator flight table requirements and reduces the antenna array size.

A number of general purpose simulator facilities like this have been constructed within the United States and are active at this time. These include: The Radar Target Simulator (RTS) at The Boeing Aerospace Company in Kent, Washington; The Radio Frequency System Simulator (RFSS) at the Army Redstone Facility in Huntsville, Alabama; the Central Target Simulator (CTS) at the Naval Research Laboratories in Washington, D.C.; and the Radio Frequency Target Simulator, (RFTS), at the Air Force Armament Laboratory, Eglin AFB, Florida. While each of these facilities is unique and configured to emphasize particular test goals, they each contain the basic closed loop capabilities and elements described here.

As shown in Fig. 1-1, within each simulator, data processing equipment is provided to generate software models for all aspects of the simulation not represented by active hardware. The data processing equipment generates a simulation of the aerodynamics and relative kinematics of the engagement and controls the microwave Target Generation system. The Data Processing subsystem provides outputs to drive the 3-axis Flight Table with the missile body angles and the RF generation system with target, clutter, ECM spectral information, doppler, and range. There are also relative pointing angle outputs to drive the position control subsystem in pitch and yaw. Elements within the data processing subsystem provide means to control the process of the entire closed-loop simulation from launch to intercept. This includes processing of target, clutter, and ECM signatures, quick-look and statistical test results, and system diagnostics.

The RF Generation subsystem required to generate the target, clutter, and ECM signals under control of the data processing can become quite complex. Figure 1-2 shows a simplified block diagram of part of an existing RF generation system. This unit is designed for evaluation of active seekers. In order to maintain the capability to operate with a wide range of active seeker types, it is necessary to accept a sample of the actual transmitted waveform of the seeker under test. The signal is then manipulated to impress upon it the characteristics resulting from target and clutter reflections. The composite signature is then transferred to the position control subsystem.

The input signal is first converted to an appropriate intermediate frequency and delayed in time to represent the range delay interval. It is then mixed with target and clutter spectrums and converted back to the input frequency band. The Up-Converter output, containing the target and clutter signatures with doppler, are attenuated for range path loss and transferred to the position control subsystem for radiation from the antenna array at the correct angular position. A precise Frequency Control subsystem is provided to synthesize the correct Local Oscillator (L.O.) signals used to translate the signal frequencies within the RF Generation subsystem.

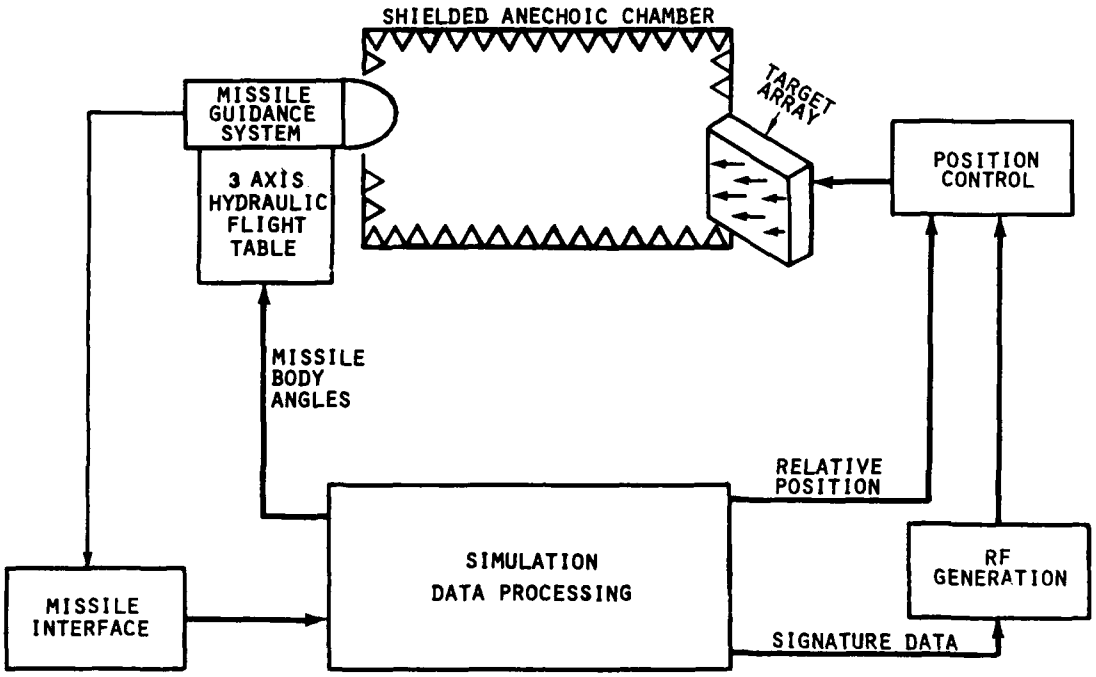

FIGURE 1-1: SIMULATOR BLOCK DIAGRAM

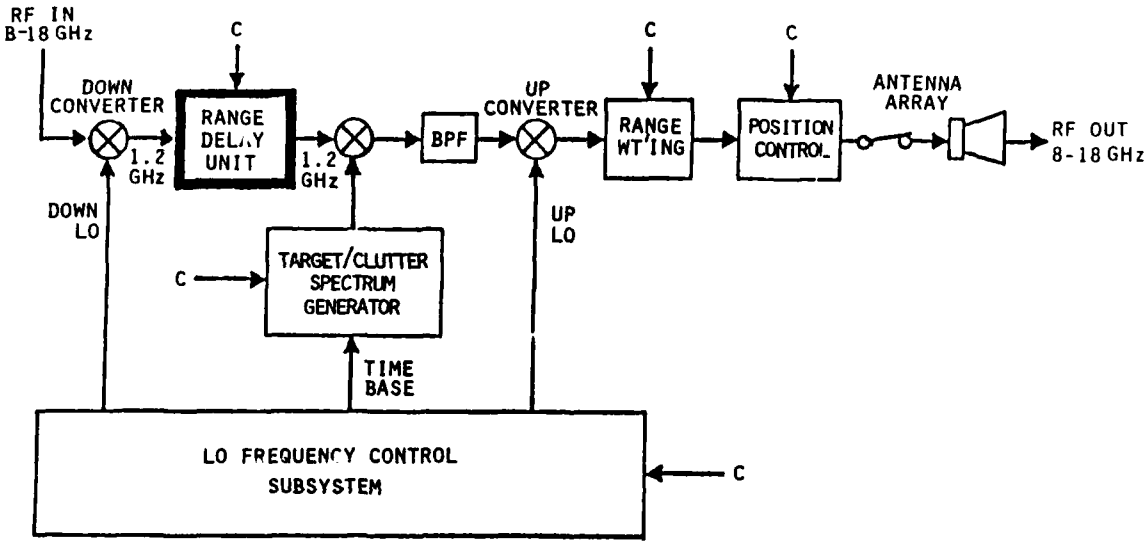

FIGURE 1-2: TARGET GENERATION SYSTEM

Because of the need to test seekers with a wide range of transmitted signal characteristics, the Range Delay Unit, used to simulate the effects of range time delay, is particularly critical to the performance of the RF Generation subsystem. This Unit must accept a wide range of pulse and FM signals containing many types of modulation. The transmitted signal characteristics must be faithfully reproduced over a considerable bandwidth and delay period with adequate range resolution for seeker processing. Multiple outputs are required to simulate the effects of extended targets and clutter and various modes are required to handle ambiguities resulting from a wide range of seeker Pulse Repetition Frequencies and Duty Cycles.

This paper deals with the development of Range Delay Units for simulator applications since these devices are critical to successful RF guidance system simulation testing. A wide variety of potential implementation solutions are discussed, with particular emphasis on high-fidelity techniques now available using state-of-the-art digital technology.

2. REAL TIME DELAY TECHNIQUES

A number of innovative appoaches have been used to accomplish the range delay function for Radar Target Generators. Some of these are useful only for special types of seekers under test. Others disrupt the desired signal by adding spurious frequency or time domain signals. This disruption can be so serious that the simulators are unusable for testing modern seekers having narrow processing bandwidths and coherency and coding requirements. Many limited-use facilities employ delay synthesis approaches using timers to synthesize a replica of the transmitted signal delayed by the range delay period. This approach can be useful for special purpose simulators where it is cost-effective to build a signal synthesizer to test a specific missile system. It is not usually applicable to general purpose simulators which must accomodate a wide range of seeker waveforms and therefore must operate on the actual transmitted seeker signals to realistically simulate range delay.

Fluid tanks have been historically used as signal delay and storage devices by propagating an acoustic wave representing signal information through the fluid medium. One such unit, which has been used for radar target signal delay, incorporates a transducer which introduces the accoustic wave at an appropriate carrier frequency into one end of a long narrow tank of Mercury. A receiving transducer immersed in the Mercury is mechanically moved along the tank. This will generate a delay due to the propagation velocity of the accoustic wave in Mercury. The position of the transducer is adjusted with a servo to obtain the desired range delay. Multiple reflections from the transducers and from the tank sides along with a limited bandwidth and high loss for the tranducers severely limits the applications for this type of device.

Dispersive Line and Memory Loops have also been used with limited success to simulate range delay. These techniques introduce severe spectral distortion and spurious time domain signals due to the dispersion and loop repeater period. Their use is usually limited to certain seeker waveforms which can tolerate these characteristics.

More recently, Bulk-Effect accoustic devices have been introduced to provide delay effects. These are non-dispersive fixed-delay elements, usually in the range of 1 to 20 microseconds. They have typically been operated in 1-2 GHz band, however, devices are available up to 10 GHz. These devices are constructed from Sapphire or Quartz crystals with transducers attached to each end. A Range Delay Unit requires many of these elements to span the typical target generator delay of 100 to 200 microseconds. The elements are electronically switched in and out of the signal path to provide delay changes. Each delay element introduces multiple reflections from the transducers at each end. This results in spurious signals arriving at the output after three passes through the crystal, often referred to as Triple-Travel Spurs. Very careful control of the device propagation losses and tranducer efficiency is required to limit the level of these spurs to acceptable levels for seeker signal processing. Trade-offs between bandwidth, crystal material, and center frequency are required to provide acceptable device losses and spur levels. These devices have excellent spectral purity except for time-domain spurs, but the temperature sensitivity of the delay introduces large phase shifts which limit the phase coherency of a switched delay unit constructed of them. Many amplifiers may be required to offset the high losses inherent in these devices, and equalizers are required to maintain wide bandwidths. Information temporarily stored within a given delay element can be lost when the device is switched out due to range changes unless complex switching techniques are employed. This can result in significant periods of signal loss which may be unacceptable for testing certain seekers. The triple-travel spur level in the bulk-effect devices becomes unacceptable for very short delays. Other techniques must be used to augment these devices to provide short delay changes. Delay Units using these techniques are usually separated into a Coarse Delay Unit incorporating Bulk-Effect devices and a Fine Delay Unit using other techniques.

Switched Coaxial Delay Lines have proven useful to augment the Bulk-Effect devices to provide short delays. Fine Delay Units have been constructed using binary-weighted sections of coaxial line which are switched in and out. These units can control the delay from a few microseconds down to a few nanoseconds. Only very simple equalization is required to achieve large bandwidths (around 1 GHz). The delays can be phase coherent if the coaxial cable is temperature stabilized. No transducers are required, so end reflections can be kept low with proper termination, resulting in low Triple-Travel spurs except for very short coaxial sections. High loss coaxial line is available and can be used for the short sections to further reduce the spurs if required. Range Delay Units incorporating a Coaxial Fine Delay in combination with a Bulk-Effect Coarse Delay have been constructed and used in contemporary Radar Target Simulators with excellent results.

A Bragg-Cell Fine Delay line has also been used to augment the Bulk-Effect Coarse Delay Unit. This consists of a single Bulk-Effect delay crystal fed with a transducer at one end. As the accoustic wave representing the signal propagates down the crystal, a collimated beam of laser light is transmitted through the crystal at right angles to the accoustic path. The light interacts with the accoustic wave resulting in Bragg difraction. The diffracted beam is mixed with a reference beam and then detected with a photodiode. The output of the photodiode is a reproduction of the accoustic signal but delayed in time. By moving the crystal with a mechanical servo, the point along the accoustic axis of the crystal where the laser beam passes through it can be changed. The resulting photodiode output delay time will change accordingly. Since there is no accoustic-electrical output transducer attached, the Bragg-Cell can be terminated at the output end to minimize triple-travel spurs.

Bragg-Cell devices have been fabricated with a few microseconds maximum delay that give essentially continous fine delay resolution. The position of the mechanical servo must be reset each time the total delay range of the Bragg-Cell is exceeded and the Coarse Delay Unit is stepped to the next delay increment. Two of these devices must be used in the Fine Delay Unit to allow for the mechancial servo reset time. The two devices alternate so one is in use while the other is resetting. Fine Delay Units incorporating Bragg-Cell technology have experienced severe limitations due to the introduction of incidental FM onto the signal by the device. The problem occurs because of non-uniform velocity control of the mechanical servo that moves the crystal. Since the input signal is at a non-zero carrier frequency, a doppler shift proportional to the carrier frequency and delay rate is added to the signal when the delay servo is moved. Any slight jitter in the servo velocity causes a corresponding FM noise modulation in the doppler frequency spectrum. The result is a spreading of the spectral bandwidth of the simulator signal, similar to incidental FM.

Radar Target Simulator Range Delay Units have been constructed using a Bragg Cell Fine Delay and a Bulk-Effect Device Coarse Delay. The spectral spreading noted above has resulted in severe limitations to the maximum simulated closing velocities in actual simulations. At high simulator closing velocities the seeker may reject the doppler-spread signals as not representative of a target. Partial solutions to this problem have been found. By reducing the effective carrier frequency, possibly even to zero, the spectral spreading can be reduced. The triple-travel spur level has continued to be an inherent problem with the Bulk-Effect discrete delay devices used in the Coarse Delay Units.

It is now possible to store and retrieve digital data at sufficiently high rates such that wide-band seeker transmitter signals can be stored in a digital memory unit and then retrieved after the range delay period. This technology offers an alternate approach to the techniques described above. This approach eliminates many of the limitations mentioned. The next section of this paper discusses Digital Pulse Storage technology along with the performance capabilities and limitations of that technology as applied to radar target simulators.

3. DIGITAL PULSE STORAGE SYSTEM

New high speed digital technology will now support storage and retrieval of R.F. pulses in a digital semiconductor memory for bandwidths up to several hundred megahertz. This can be expensive for high accuracy representations of wide bandwidth signals since this means a correspondingly large, high-speed digital memory will be required. For high PRF signals with range ambiguities the memory is sized by the delay resolution, the maximum total delay time, and the signal bandwidth. For low or medium PRF signals, having unambiguous range, considerable savings can be achieved by storing the pulse phase data only while an active pulse exists and then relying on delay counters to accomplish the delay.

Digital storage of RF pulse information has been accomplished using the technique shown in Fig. 3.1. As shown here, an input pulse is mixed down to baseband using an internal Local Oscillator (LO) centered on the signal frequency. Both in-phase (I) and quadrature-phase (Q) mixers are provided. The resulting baseband I and Q signals are digitized and then sampled to provide the digital data stream outputs of the multiphase Down-Converter. This data is then stored in a high speed digital memory. The continuous sampling and storage process, in real time, provides a coherent time history of both the pulse and intrapulse periods. In this simplified example, the baseband I and Q signals are digitized to two possible states as is shown in Fig. 3.2. While this simplifies the delay unit and is satisfactory in many applications, signals reconstructed from this data will contain significant odd-order spurious signals due to the uniform symmetrical sampling.

Referring back to Fig. 3.1, when the desired delay period has elapsed, the I and Q data streams, representing the pulse phase history, are read from the memory, converted to signal levels, and then mixed with I and Q components of the LO signal to reconstruct the original pulse at the original frequency but delayed in time. With continuous, real time data conversion and storage processes, the phase history of the pulse as well as that of the intrapulse period will be retained. Due to the binary sampling, the amplitude information in the pulse is not retained. Using high speed digital technology, clock rates of 200 to 300 Mhz are not uncommon, permitting instantaneous signal bandwidths of 150 to 250 Mhz using quadrature sampling channels.

Single-bit technology, while satisfactory for many applications, is not very useful for high quality target generation in an RF simulator. The high sampling spurs due to the binary sampling can be interpreted as false targets by a seeker under test. This will result in an unrealistically poor probability of acquisition of the correct signal by the seeker. Due to the limitation of single-bit systems a multi-bit Range Delay Unit (RDU) was developed to provide a high quality range delayed signal without introducing significant false targets.

In order to reduce the third order sampling spurs (false targets) to -30 dbC, a delay unit using 6-bit conversion between the baseband I and Q channels and the digital memory was designed. A block diagram of the resulting unit is shown in Fig. 3.3. The unit provides an instantaneous bandwidth of 120 Mhz, centered at an IF frequency of 1.2 Ghz. A clock frequency of 160 Mhz was selected to achieve a 60 Mhz instantaneous bandwidth for each I and Q channel. Operation of this unit is similar to the single bit system shown in Fig. 3.1. Arriving pulses are translated to I and Q baseband channels in the quadrature mixer using the 1.2 Ghz LO. These baseband signals are then converted to digital data using high speed "flash" A/D converters. The data streams are then loaded into the digital random access memory (RAM). At a clock rate of 160 Mhz there will be 12 bits of data loaded into the memory every 6.25 ns. The RAM address counters in the control logic operate continuously at the clock rate so that the memory will also cycle continuously.

The digitized data representing the RF signal is recovered from the digital memory after a period of time representing the range delay has elapsed. The I and Q data is reconverted into analog signals using high speed, six-bit, D/A converters. Each channel will have a bandwidth of 60 MHz. The analog I and Q channels are reconverted to 1.2 GHz, using a Quadrature (single-sideband) modulator, to regenerate the original RF signal characteristics, but delayed in time. The composite signal will have a 120 MHz instantaneous bandwidth.

Current digital memory and digital-analog conversion technology will not support direct, single-channel, operations at the speeds required to achieve the above bandwidths. In order to accomplish the memory data transfer rates required, each I and Q channel are demultiplexed to 8 sub-channels at the memory input. Eight parallel memories are then used to store the data. Each memory cycles at one-eighth of the clock rate or 50 ns for a complete read-write cycle. The memory outputs are multiplexed to recombine the eight data streams back into a single path for each I and Q channel. This is illustrated in Fig. 3-4. The effect is as if a single-channel, 6.25 ns cycle-time, memory were actually used.

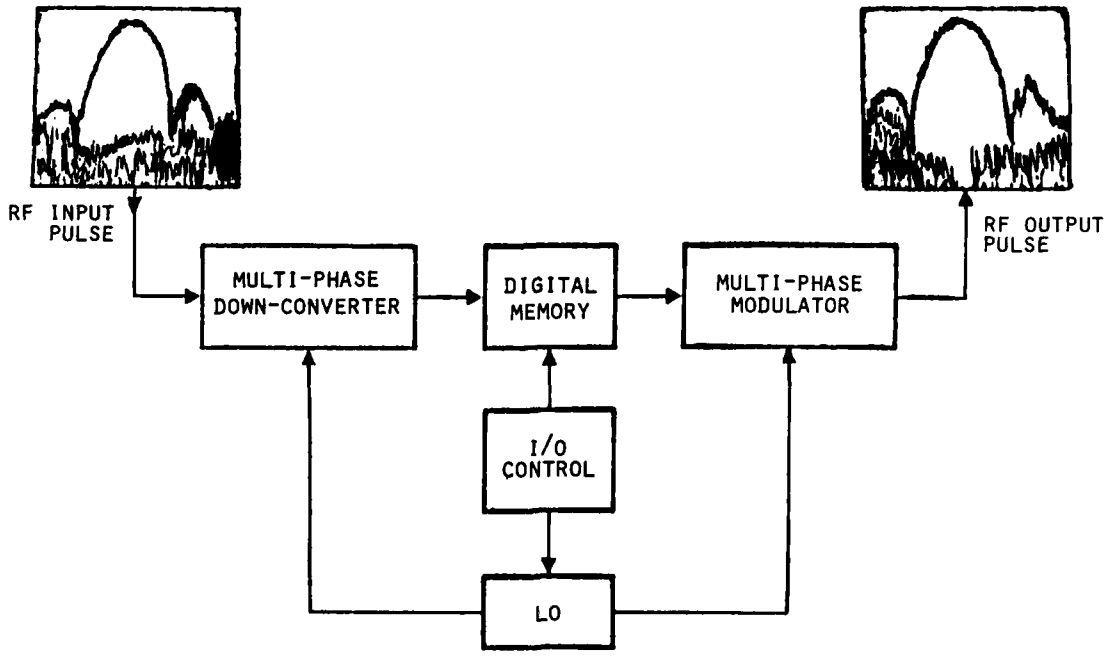

FIGURE 3-1: RANGE DELAY - DIGITAL MEMORY TECHNIQUE

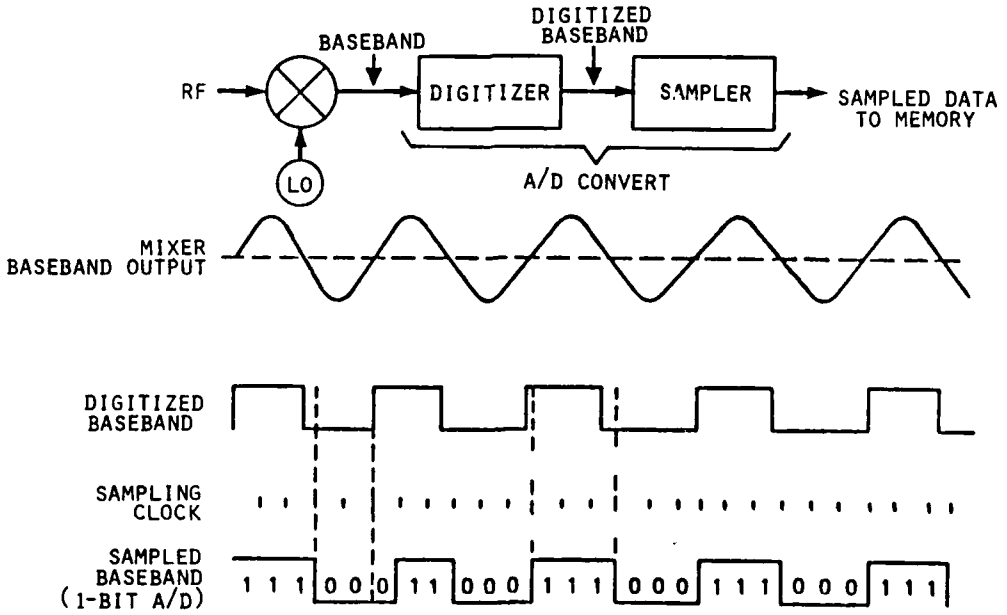

FIGURE 3-2: DIGITIZER/SAMPLING PROCESS

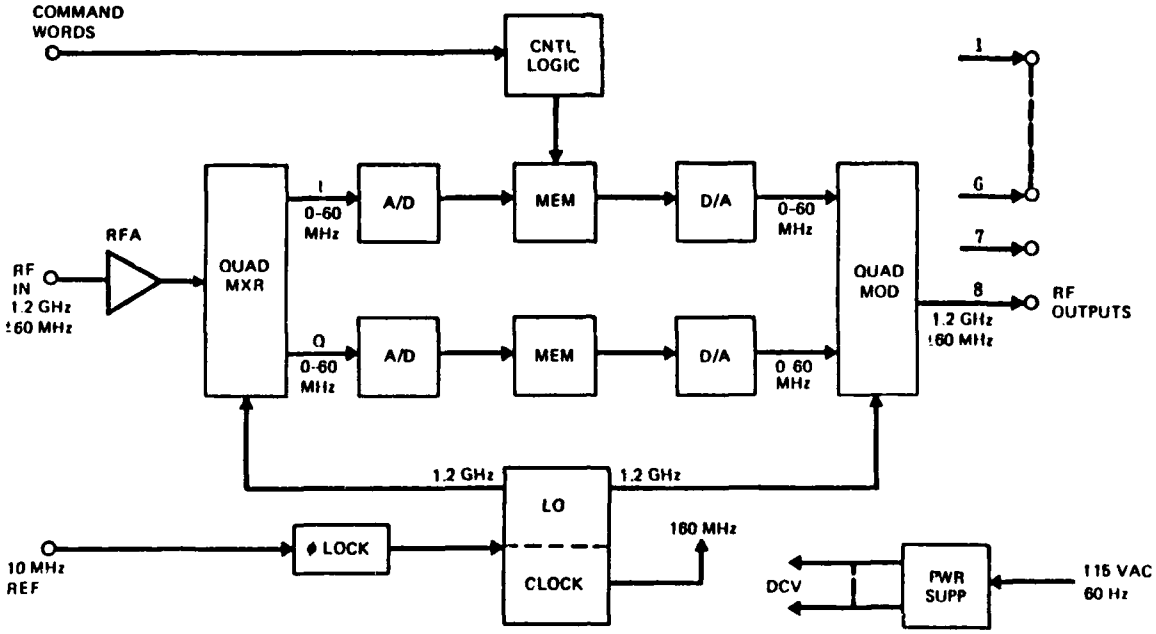

FIGURE 3-3: HIGH ACCURACY RDU

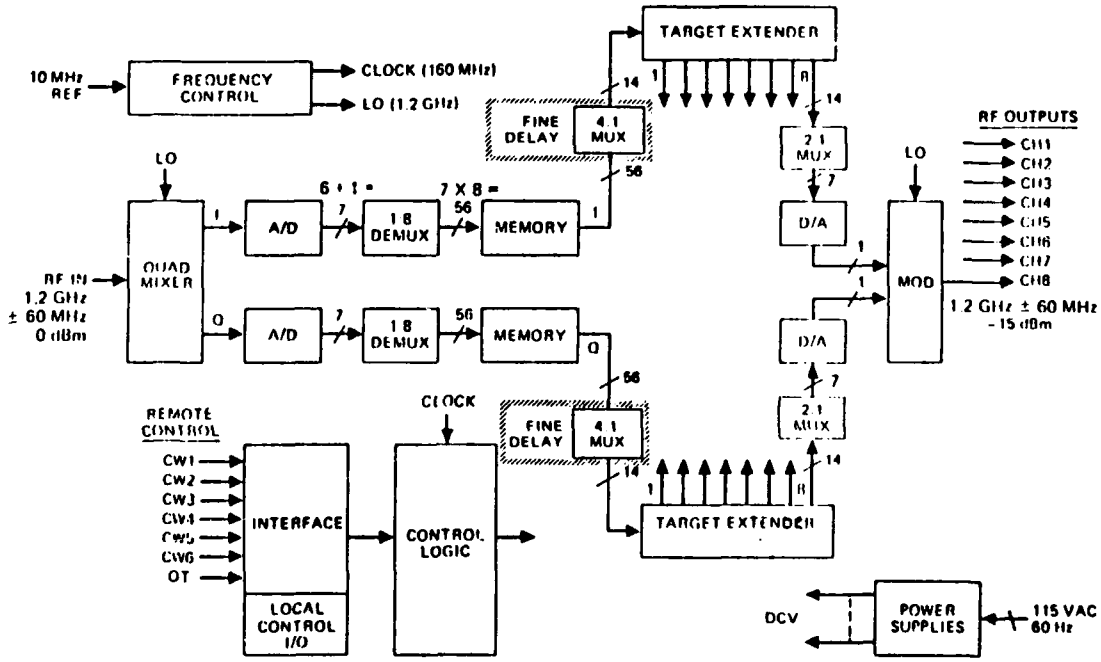

FIGURE 3-4: TARGET EXTENDED RDU

In order to simulate the effects of a range-extended target, multiple, incrementally-delayed outputs are required from the RDU. After the initial range delay period has expired, each output channel, in turn, provides a separate RF output to a sidestep mixer where it is modulated by the proper spectrum for that time increment. In this RDU the time extension is accomplished in a digital Target Extender operating at half of the output clock rate. The extender consists of parallel, 8-bit shift registers with separate RF output channels for each stage of the register. The input of the range extender comes from the range delayed main-memory output. This is illustrated in Fig. 3-4. The incremental delay of this unit is selectable. Figure 3-5 shows the representation of a range-extended target using 25 ns increments. Each output channel is independent in amplitude, doppler, spectral content, and angular position in the Target Simulator.

The shift-register approach for the Target Extender discussed above will work only for high PRF target simulations where the total incremental delays span a few hundred nanoseconds at most. For low and medium PRF systems and extended clutter simulations, a different approach to generate the incremental output channels can be used. In this case, the range extender is not activated. Instead, the pulse information in the main memory is repeatedly read out to the separate RF output channel with each readout incrementally delayed from the previous one. The first readout occurs at the range delay time. This extended output technique is designated "MODE 2". The range extender approach is designated "MODE 1".

For clarity the two modes of operation of the RDU are shown in an equivalent form in Fig. 3-6 and 3-7. In these figures, the continuously cycling digital memory is represented as a rotating drum memory. The size of the digital memory is such that the entire memory will be cycled every 204.8 microseconds. In MODE 1, Fig. 3-6, the memory write function operates continuously so that a continuous reproduction of both pulse and intra pulse gap information is recorded in the memory. The output information is also read continuously from the memory. However, the memory address from which the output data is taken is offset from the write address by the value of range delay required. A given pulse written into the memory will not appear at the output until the delay period has elapsed. As shown in the figure, the range delayed output is supplied simultaneously to the first RF output channel and to the range extender shift register (delay line). Taps at each stage of the shift register, at 100 ns increments in this example, feed the pulse information to the remaining RF output channels. Note that, in this mode, no transmitted pulse trigger is required since the read and write functions operate continuously. The Pulse Repetition Interval (PRI) can be less than the range delay, and the Pulse Width (PW) can exceed the incremental output delay.

Figure 3-7 shows the equivalent MODE 2 RDU model. In this mode the read address is initialized to the Range Delay value but is incremented seven times to provide additional output repetitions of the same input pulse. Since the read electronics must know where in memory a pulse is located in order to step ahead of it, a trigger signal is required at the time the input pulse occurs to denote the write address where that pulse is stored. After the range delay period, the read address will agree with the stored pulse location and the read electronics will start the output sequences. As each RF output is complete, the read address is incremented and the next sequential RF output channel is selected. Once a pulse is written into the memory, no further input pulses will be accepted until the output sequence for that pulse is complete, since only one write address is stored at a time. Unless added provisions are made to stack pulse location addresses, the signal PRI cannot exceed the Range Delay in this mode. The maximum incremental delay can be as large as required, but it cannot be less than the signal pulse width.

Figure 3-8 shows typical signals at the RF ports of the RDU using the two modes of operation. MODE 1 will accomodate high PRF, high duty cycle signals but with only limited incremental delay. MODE 2 will accomodate signals which have no range foldover with nearly unlimited incremental delay, but the pulse width must be less than the incremental delay.

Two additional features were provided on the Digital RDU as finally implemented: In order to provide the capability to adjust the relative delay between a point target and the associated clutter, the specific RF output channel used as the point target can be selected to derive its output signals from any one of the digital output channels. To improve the subclutter visibility under certain test conditions, each output channel can be selected to ignore signal phase information to reduce the effects of sampling noise in a clutter channel.

4. DIGITAL RDU PERFORMANCE

One version of the Range Delay Unit described was packaged into a single standard 19 inch rack approximately 6 feet high for use in a Target Simulator. Due to the power dissipation of the ECL circuits in the main memory and target extender, cooling air is required for a laboratory environment. Table 4-1 summarizes the actual performance which was achieved for this unit. The bandwidth and spurious output levels vary slightly between output channels. The amount and amplitude of spurious signals in the output channels is dependent upon the offset between the signal carrier frequency and the L.O. (channel center) frequency. Narrowband Spurs are defined when this difference is less than 1.0 MHz - Wideband Spurs are defined when the difference is greater than 1.0 MHz. Coherency refers to the RDU output mode for which the signal phase information is reproduced.

This unit has been operational in a Radar Target Simulator and has successfully provided high quality range delay and extended delay functions for missile acquisition and guidance testing. A second unit with improved performance is under construction and will be installed in the same facility.

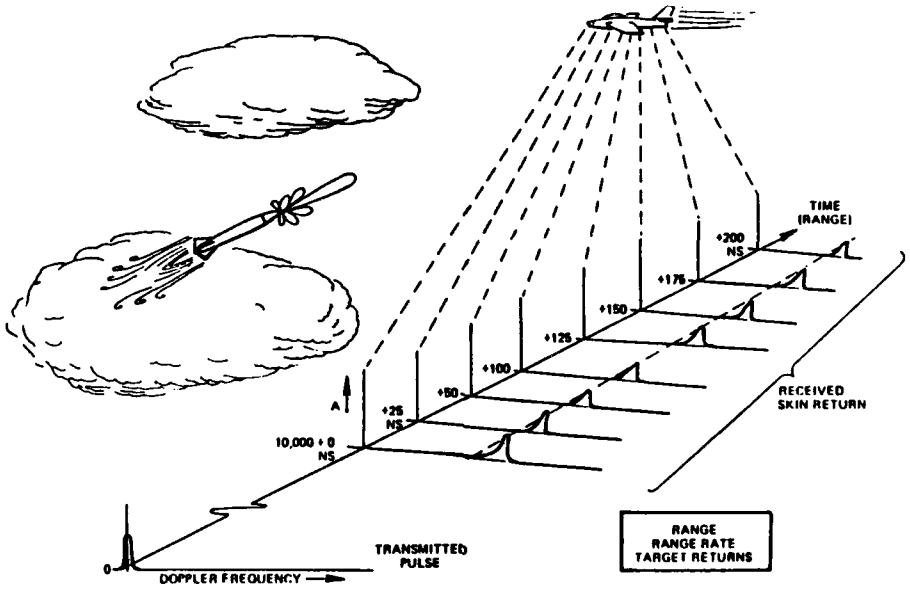

FIGURE 3-5: RANGE EXTENDED TARGET

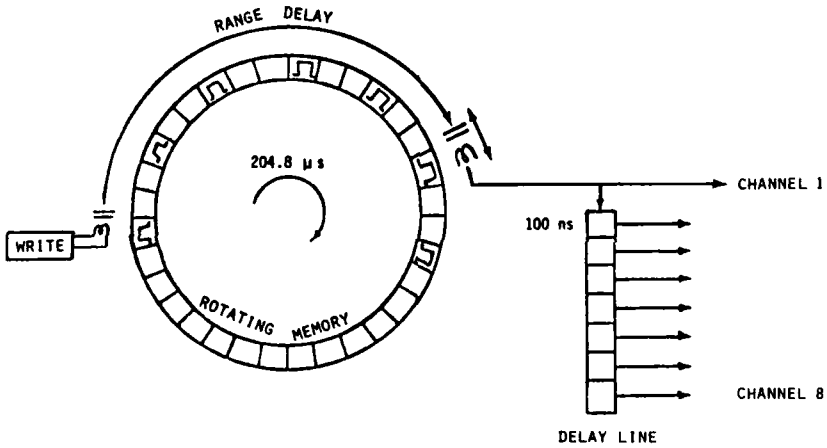

FIGURE 3-6: RANGE DELAY UNIT
MODE 1

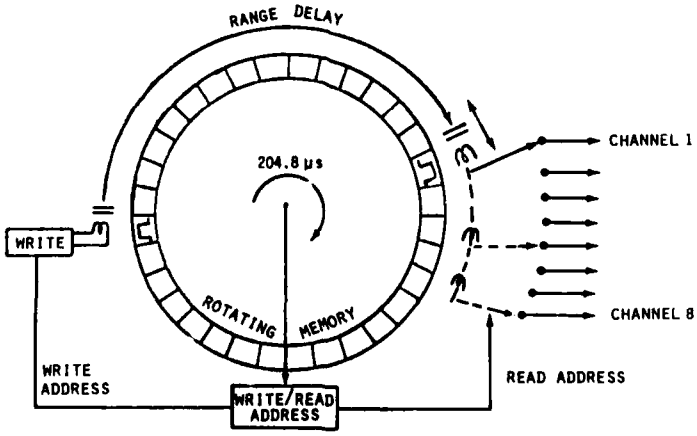

FIGURE 3-7: RANGE DELAY UNIT
MODE 2

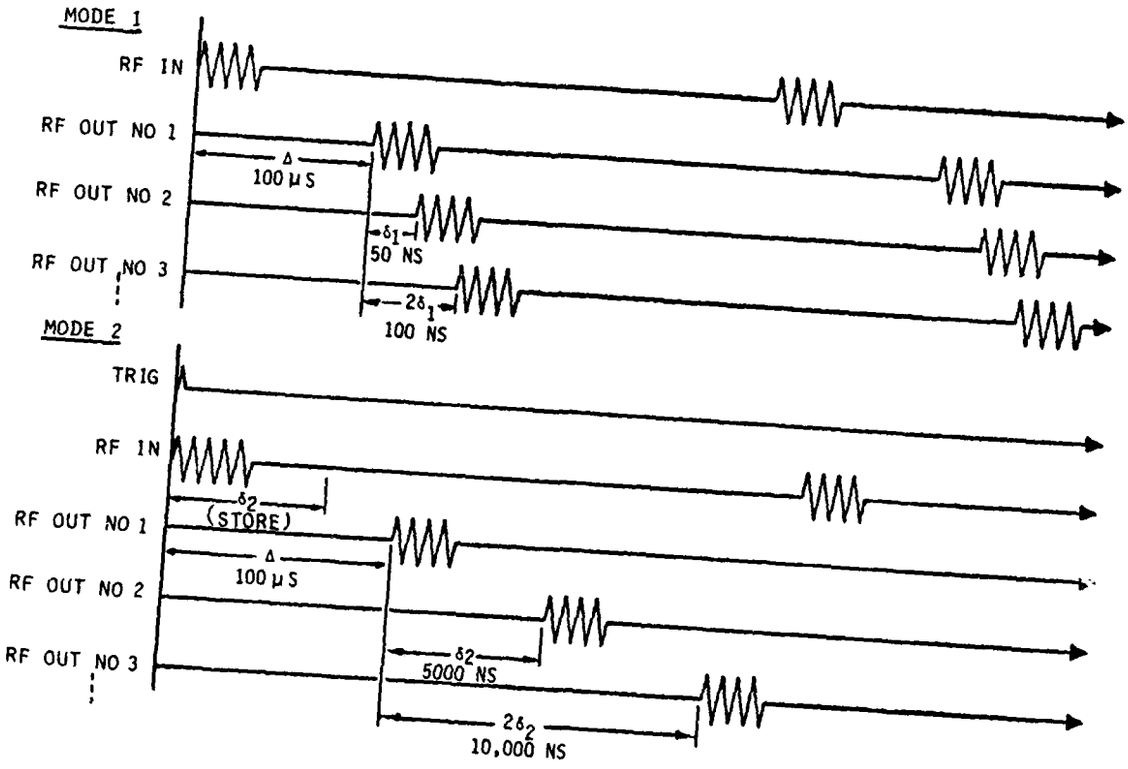

FIGURE 3-8: EFFECT OF RDU MODES

TABLE 4-1

DIGITAL RDU PERFORMANCE SUMMARY

CENTER FREQUENCY	1.2 GHz
BANDWIDTH	98-128 MHz
OUTPUT CHANNELS	8
DELAY RANGE	0.3 TO 205μs
DELAY RESOLUTION	12.5 ns
COHERENT MODE SPURS (NARROWBAND)	-30 TO -33 dBc
COHERENT MODE SPURS (WIDEBAND)	-12 TO -18 dBc
NON-COHERENT MODE SPURS (WIDEBAND)	-60 TO -68 dBc

SIMULATION VALIDATION EXPERIENCE – PATRIOT GUIDANCE SYSTEM

by

William C.Morton
PATRIOT ATBM Lead Engineer
Raytheon Company, Bedford Laboratories
Mail Stop M3-13
Hartwell Road
Bedford, MA 01730, USA

SUMMARY

The increased use of sophisticated simulations as performance prediction tools during the development of guided missile systems has placed greater emphasis on comprehensive validation of the models used. Validation of several simulations has been accomplished by Raytheon Company while developing the Army's PATRIOT air defense system. This paper presents the validation experience for two large-scale guidance simulations; the Hybrid Guidance System Simulation and the Guidance Test and Simulation Facility. Examples of the data collected are presented in the course of discussing the approach to validating all mathematical as well as hardware-in-the-loop simulations. Conclusions are drawn as to the most effective methods and the value of the validation process to the overall system development.

INTRODUCTION

Simulation validation has played an important role throughout the development by Raytheon Company of the PATRIOT Army air defense guided missile system which entered production in 1980. PATRIOT incorporates a number of unique concepts in the areas of communications, command and control, surveillance, and guidance that enhance its effectiveness against a broad spectrum of threats. It is designed to operate under extreme weather conditions or in a heavy clutter environment, and it retains its capability in the presence of advanced ECM. Throughout PATRIOT's development cycle, sophisticated simulations have played a major role in the design and evaluation activities. Validation of these simulations has been essential in order to extend this performance prediction capability throughout the broad PATRIOT operating environment.

Over the many years of development, a broad spectrum of simulations has evolved. Major simulations utilized for evaluating system performance have all gone through a comprehensive validation process. These are the Hybrid Guidance System Simulation (H1), the Guidance Test and Simulation Facility (GTSF), the Surveillance Simulation (S1), and the Lethality End Game Simulation (LEGS). Validation experience with the two guidance simulations has been selected for detailed presentation, since this involves both all-mathematical (H1) programs and hardware-in-the-loop (GTSF) facilities. The approach to validation is described, and the results obtained are summarized and discussed. Finally, some comments are presented relative to the value and cost effectiveness of extensive, formal validation of large scale simulations.

VALIDATION APPROACH

Simulation validation, simply put, is a formal verification of the fidelity of the models and the accuracy of the input parameters. In principle it is simple, but the actual carrying out of the validation process requires careful planning and thorough engineering analyses of available data.

Figure 1 illustrates the interconnecting links in completing the validation process (Reference 1). The general approach is a comparison of simulation and test results. This ranges from testing of individual subsystem models against equivalent hardware tests, to statistical hypothesis testing of key performance indicators, as well as flight-by-flight comparisons of predictions and test results. Since "hardware-in-the-loop" simulations as well as "all math model" simulations must be validated, comparisons between these two can also aid the process. Briefly, the steps to be undertaken are as follows:

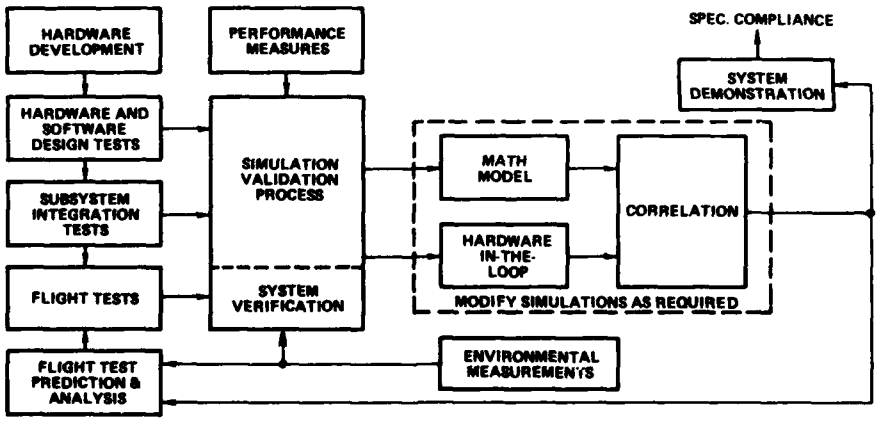

Figure 1. The Simulation Validation Process.

1) Final development of model

2) Verification and documentation of all simulation parameters, including software data base items and results of hardware tests

3) Verification of subsystem models through laboratory and field tests using forcing function techniques

4) Verification of combinations of subsystem models through comparison of time histories of key output variables

5) Verification of the complete system level model against flight test results:

   a) for individual tests where results for key variables must fall within bounds set by multiple sample simulations

   b) for some number of related flights where the flight and simulation statistical distributions of key parameters, such as miss distance, must be compared successfully using hypothesis testing

6) Documentation of the results of each of the above

7) A formal acceptance of each subsystem model and the full system level program by a committee with direct interest and sufficient expertise to assess the results.

The cumulative exercise of reasonable engineering judgment in resolving anomalies and in evaluating component, subsystem, and system simulation predictions provides a high degree of confidence that the simulations are a valid representation of the system over the range of operation represented by the tests. The hypothesis testing provides another means for evaluating the degree of validity that can be ascribed to the simulations. As the test program provides performance data over a wider range of operating conditions, the range of simulation validation will gradually be extended. When the simulations are considered to be validated, their configuration is placed under formal control and these controlled configurations are used to establish specification compliance.

Ad hoc validation committees consisting of Raytheon and government personnel were formed in mid-1977 for the H1 hybrid guidance simulation and early in 1978 for the GTSF hardware-in-the-loop guidance test facility. In late 1977, the first subsystems validation data for H1 was successfully presented to that committee. The preparation and presentation of data for both simulations continued at the subsystem level throughout the following year. After completion of a number of PATRIOT flight tests, system level validation data was presented to the respective committees. In December of 1978, the H1 validation committee accepted that simulation as a valid representation of PATRIOT performance throughout the performance envelope; the GTSF validation committee similarly accepted the validity of that facility in July of 1979. Extensive validation reports were subsequently published for both simulations.

HYBRID (H1) DESCRIPTION

An overall view of the H1 simulation, which has full six-degree-of-freedom motion capability, is presented in Figure 2. All essential elements that contribute to performance of the guidance system are modeled with a relatively high degree of complexity. This includes a complete functional representation of the guidance and control software resident in both ground and missile borne computers. Modeling of the signal processing required for tracking by both the missile seeker and the ground radar includes options for a full range of environmental effects, including ECM. In addition to the various control elements, the missile is represented by a Single Panel Aero Model involving over 30,000 data points.

The hybrid implementation of the simulation has changed gradually over the years since 1969, when the program first became operational. The initial version combined a Comcor CI-5000 analog computer with a CDC-6600 digital machine and appropriate interface equipment. The digital portion was continually upgraded through the addition of more complex models, and the rapid development and acquisition of new CDC digital equipment. A Comcor CI-500 analog machine was also added as the program expanded. In 1976, a PATRIOT Missile Borne Computer (MBC) was integrated into the hybrid structure. Around 1980, special versions of the program were developed using an ADI AD-10 digital processor to replace much of the aging analog equipment and the MBC. The use of these machines is presently being expanded as the simulation evolves more towards an all-digital, multi-machine implementation to achieve increased reliability.

H1 VALIDATION RESULTS

Because of the complexity of the H1 program, a formal comprehensive validation plan was prepared. This plan included substantial validation at the subsystem level of each of the model areas indicated in Figure 2. Subsystem validation generally consisted of model performance validation and model internal parameter value validation. Model performance validation was accomplished by comparing input/output test results from the simulation model with actual hardware test results. When possible, the validation process was supported by comparison of subsystem outputs from flight test records with post-flight simulation reconstructions from the simulation models. Parameter value validation was accomplished by comparison with vendor component test statistics, factory assembly-level test statistics, design test results, and qualification test results (Reference 2).

One of the more comprehensive H1 subsystem validation efforts was the examination of the seeker model. Included in the seeker model, in addition to the two-axis gimballed platform, are models of the three rate integrating gyros, two torque motors, rotation matrices, and the gimbal stabilization loops. Initial model and parameter validation was accomplished through comparison with three axis base

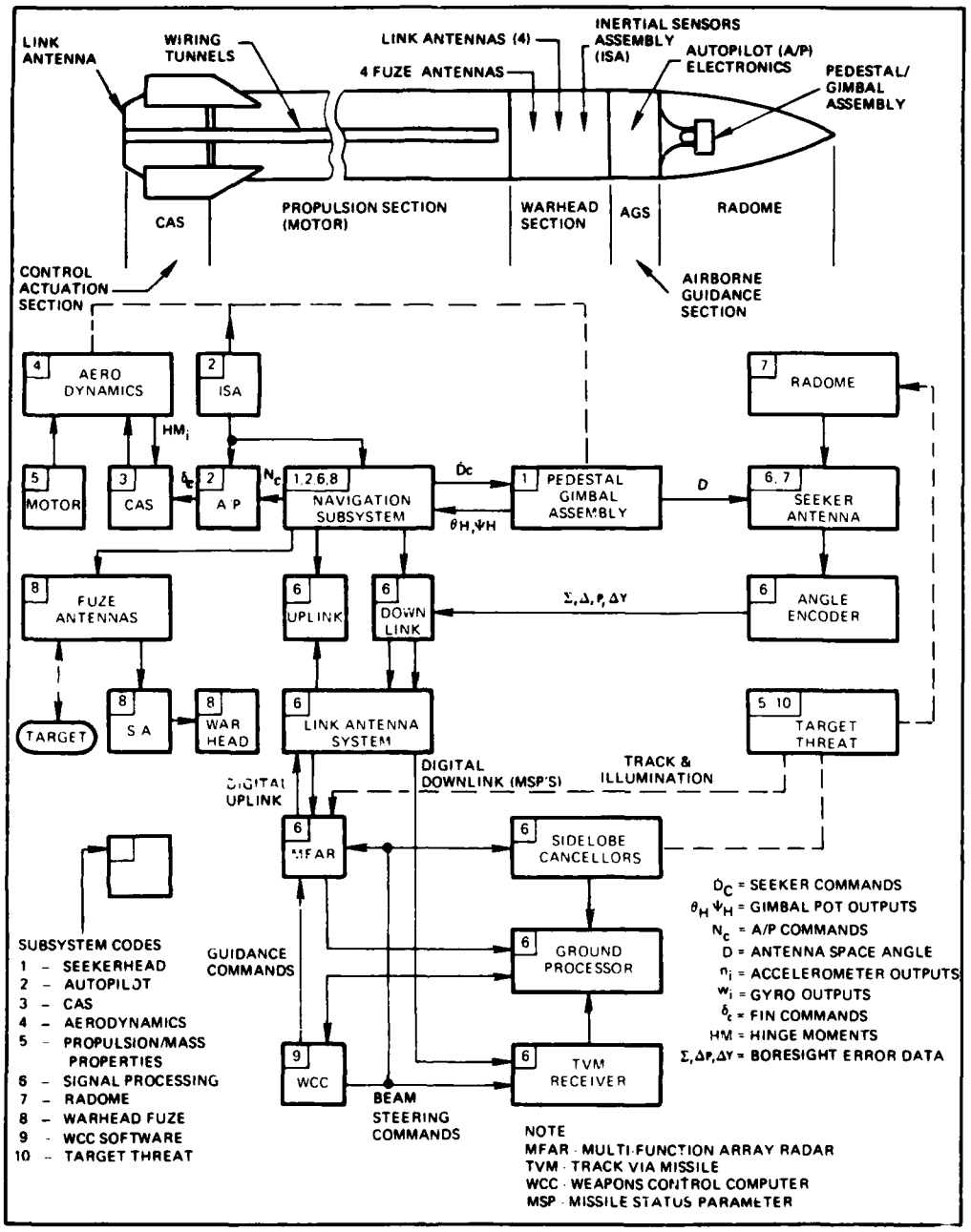

Figure 2. Guidance Simulation Models and Relation to System Hardware.

motion design tests and an accompanying detailed digital model of the seeker. Comparison of these tests, in which the seeker was mounted on a three-gimballed flight table and driven with sinusoidal base motion rates, served to validate the seeker model in a zero acceleration environment. Figure 3 presents a typical comparison of H1 results and the detailed seeker model results (which were compared separately to the test results). Note that perfect agreement was not expected, since the H1 model of necessity contains some approximations. In general, the shape and relative phasing of the simulated waveforms for all important seeker variables were in good agreement.

Inherently, this comparison between two independently developed models also validated many of the seeker input parameters. This parameter validation was further strengthened through comparisons with statistics from hardware acceptance tests, qualification tests, and factory assembly level tests. These tests were conducted on missile flight seekers, and the test sample size typically ranged from eight to more than twenty missiles. In some cases, parameters are represented in the simulation with single values, while others are represented statistically with an appropriate distribution (normal, uniform, bipolar, etc). Specifics on these parameter comparisons are not presented here, but the following lists many of the important items individually validated:

gyro float angle limits
mass unbalance
gyro alignment errors
drifts
pickoff gains

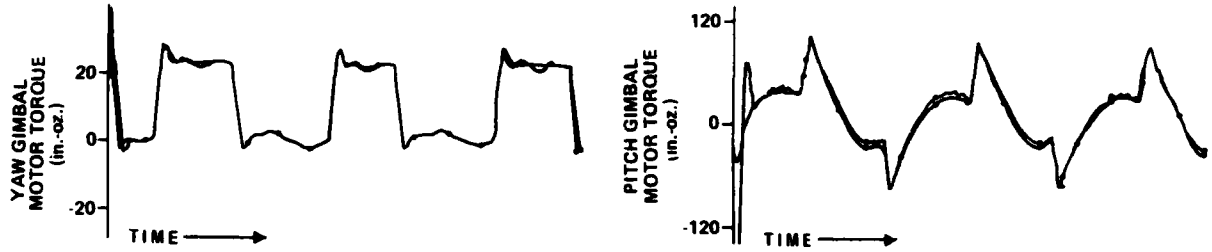

Figure 3. Motor Torque Comparison Complex Seeker Model versus H1 Seeker.

torquer gains
scale factor errors
cable stiffness
gimbal friction

The final step in subsystem validation of the H1 seeker model involved the use of flight test data in order to validate the model under realistic acceleration environments. This was accomplished through the direct use of appropriate telemetry data to drive the seeker portion of the simulation. Telemetry data (on tape) for the three missile body rates, three body accelerations, and the pitch/yaw seeker rate commands were suitably processed and formatted to provide input data to H1. Key outputs from the model were recorded and compared to telemetry data; this included comparisons of gyro angles, motor torques, gimbal angles, and head roll rate. Figure 4 presents some typical results for one of the flights. As with the three axis test comparisons, some differences were anticipated due to approximations in the model. Considerable engineering analysis was expended in examining all differences and preparing explanations which would be found acceptable in subsequent presentations to the Validation Committee.

Following successful validation of each of the subsystem models, system level comparisons were conducted which confirmed that sufficient complexity had been included in all the models, and that each part of the simulation interacts properly with all other parts. Key system model parameters were selected and comparisons were made between H1 simulation results and flight test values. The comparisons were made for each postflight analysis for both control tests and full-up guidance tests and documented in the final flight reports. Figure 5 summarizes the parameters selected for system model validation.

In general, the validation criteria were the acceptable comparison of H1 parameter histories with all the flight test results. Acceptability was decided on the basis of engineering judgment and was strengthened by successful statistical hypothesis testing regarding the overall guidance miss distance characteristics of the simulation. The basic approach was the comparison of recorded flight parameter histories with H1 minimum and maximum envelopes generated from 25 flight Monte Carlo postflight reconstructions. With a 25 flight sample size, it is expected that the minimum/maximum boundaries typically reside near the two sigma boundary of parameter variation. Therefore, some small percentage of the time the flight record would be expected to appear outside the envelope generated by a valid simulation.

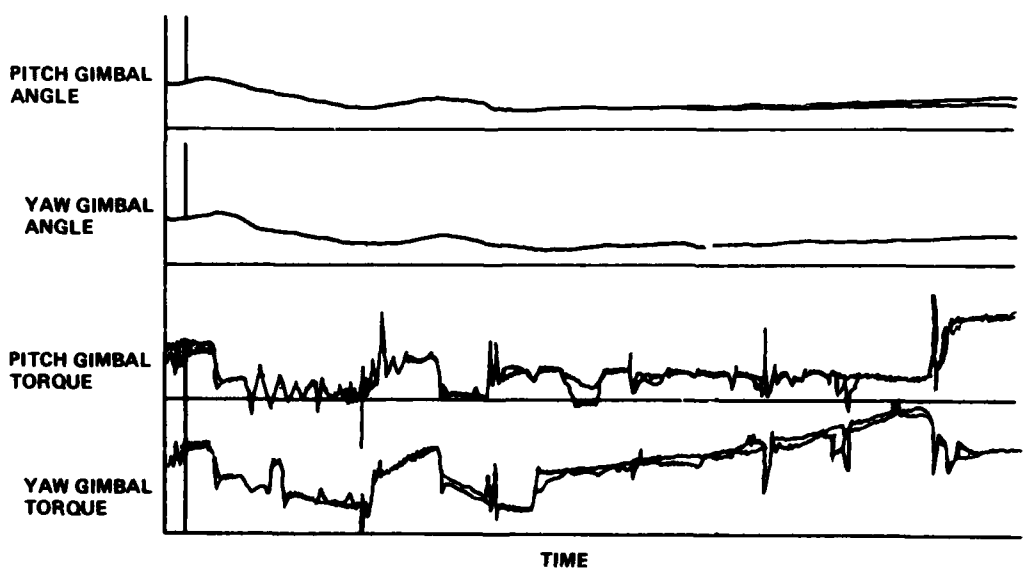

Figure 4. Comparison of H1 and Flight Seeker Performance.

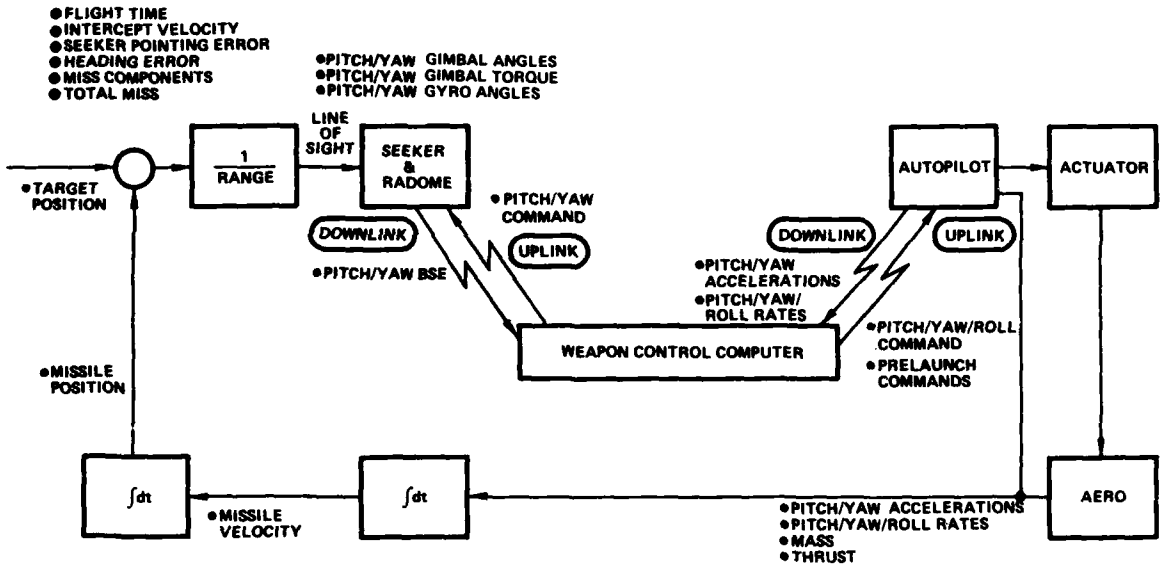

Figure 5. Key System Validation Parameters.

Numerous examples of most of the parameter comparisons are available in reports and were presented to the Validation Committee. Figures 6 and 7 serve as illustrative examples of the many comparisons of important system parameters that were successfully accomplished.

In addition to the time history comparisons, other parameter comparisons were made during specific guidance events in each flight. The selected parameters were:

1) miss distance components in the relative velocity (target centered) coordinate system

2) flight time at intercept

3) missile intercept velocity

4) heading error at the beginning of terminal guidance

5) seeker pointing error at the beginning of the TVM guidance phase

The application of hypothesis testing to miss distance observations was made to validate upper-level system model statistical properties as they relate to representing the system kill probability. The validation criterion is the acceptance that a sample of all the observed flight test misses and a sample of all corresponding H1 misses are drawn from the same population. The selected test of this statistical hypothesis was the nonparametric Kolmogorov-Smirnov (K-S) two sample test. The primary

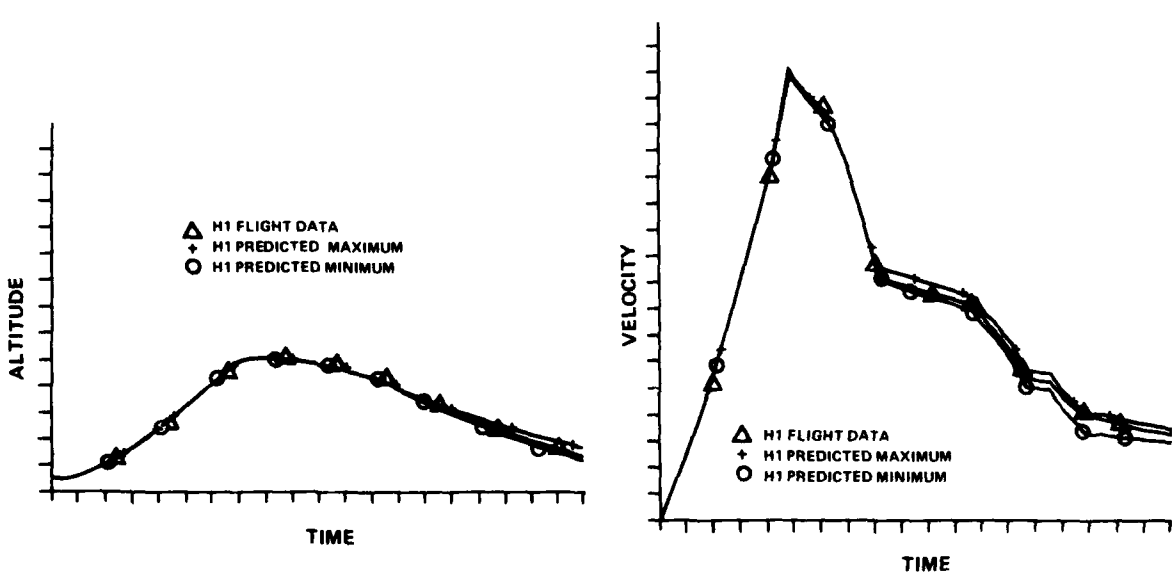

Figure 6. Typical System Level Validation Comparisons (Control Test Vehicle Flight).

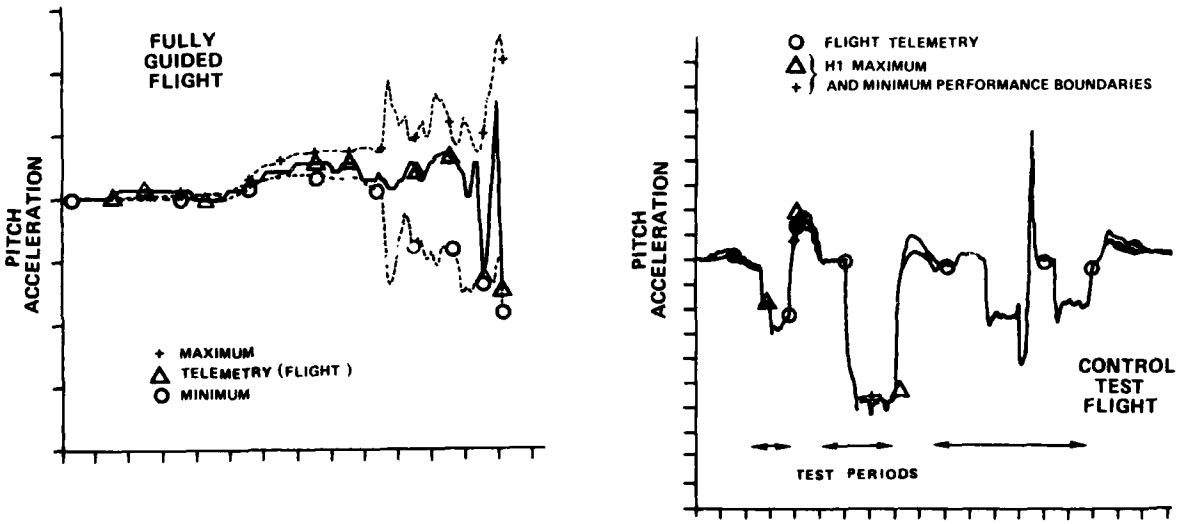

Figure 7. Typical System Level Validation Comparison of Missile Dynamics.

conclusion that was to be established by simulation validation was that H1 guidance performance inference is the same as that drawn from live test firings. It was reasoned that since miss distance is the primary guidance performance indicator, this conclusion reduces to the pragmatic hypothesis that H1 miss performance is an accurate prediction of the real world performance. Through flight test data availability and data error considerations, and flight-by-flight versus aggregate testing considerations, the validation plan equated this hypothesis to the following statistical hypothesis: A sample of all flight test misses and a sample of all corresponding H1 misses are drawn from the same population.

The results of this process for 28 flights (there were 679 corresponding H1 sample misses) is presented in Figure 8. Without detailing the resulting numbers of the K-S testing, it is clear the statistical hypothesis was accepted and it was concluded that the H1 guidance miss performance represents the actual system performance.

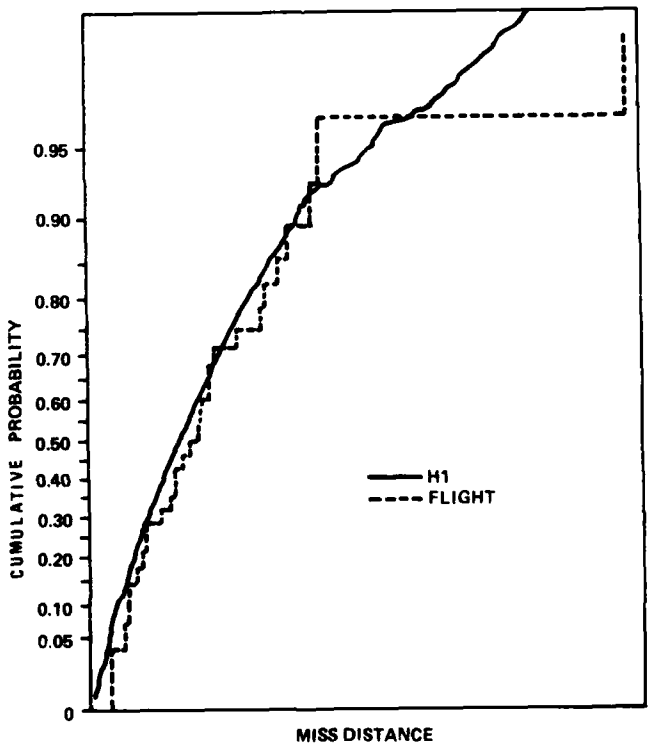

Figure 8. Statistical Comparison of Miss Distance Results.

GTSF DESCRIPTION

The PATRIOT Guidance Test and Simulation Facility (GTSF) was completed in 1971 and has also played a significant role in the successful development of the PATRIOT guidance function. The GTSF allows the testing of the missile guidance hardware and software in a real time hybrid simulation, exercising the system guidance elements over the full flight environment. The facility incorporates actual PATRIOT tactical hardware operating in a closed loop environment using specially designed facility hardware to provide a realistic representation of target dynamics and radar characteristics, along with the operational environment that the missile would encounter in a typical engagement. The simulation facility is interconnected with a high-speed hybrid (analog/digital) computer system that is programmed to provide a complete simulation similar to H1 of the missile aerodynamics, kinematics, and missile-to-target geometry. In addition, the hybrid computer controls the facility's simulation hardware through a special interface.

A functional block diagram of the GTSF (Reference 3) is shown in Figure 9. The hardware is divided into three functional groups including the PATRIOT Ground Guidance Simulation, the PATRIOT Airborne Guidance Simulation, and the Environment Simulation.

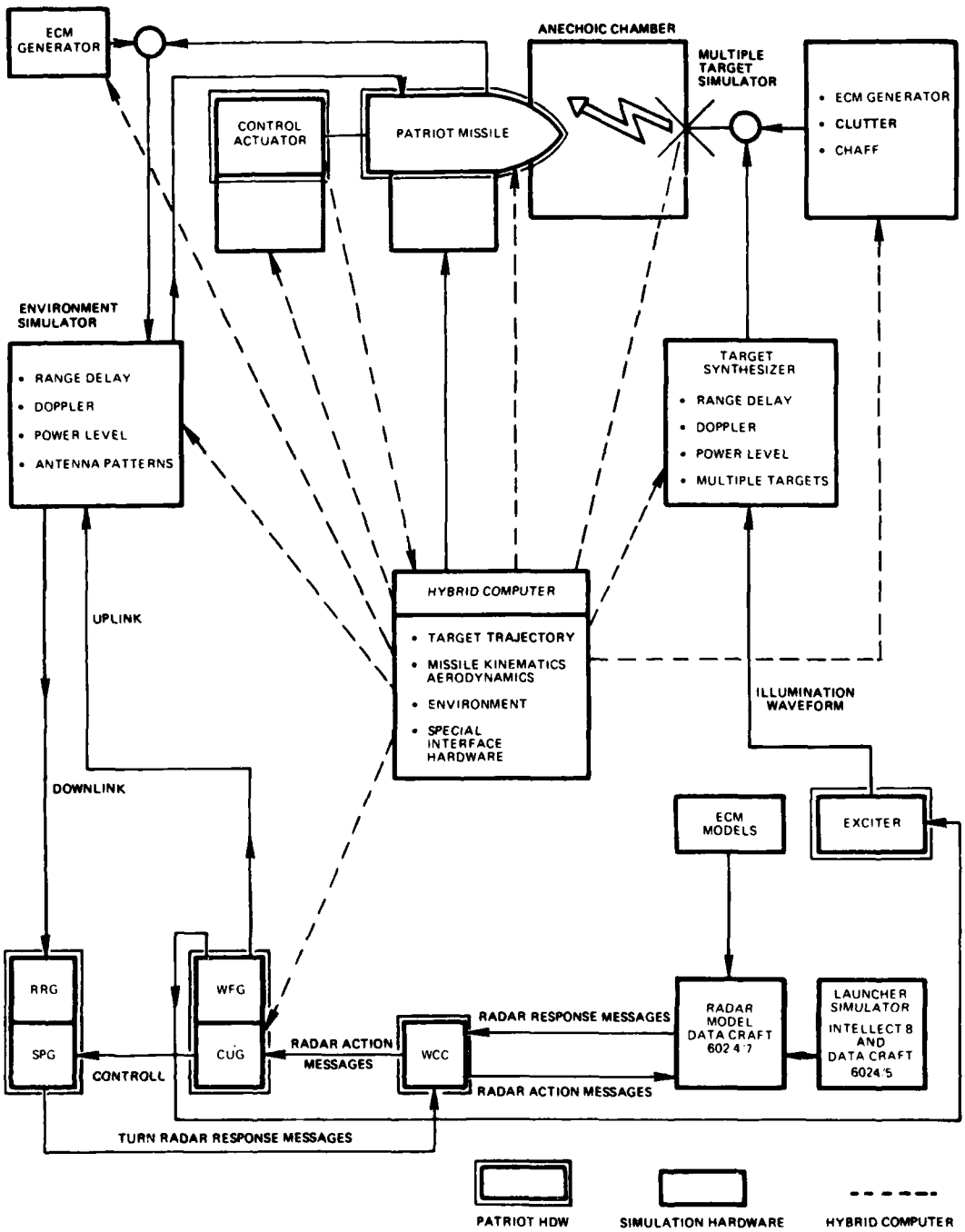

Figure 9. GTSF Functional Block Diagram.

The Ground Guidance Simulation includes the following PATRIOT guidance system hardware:

Weapons Control Computer (WCC)
Control Unit Group (CUG)
Waveform Generator (WFG)
Signal Processing Group (SPG)
TVM Active and Correlator Processors
Receiver Front Ends of Radar Receiver Group (RRG)
Modified Exciter

all of which are integrated with the Multifunction Radar Model using a Datacraft 6024/7 and a Launcher Simulator using the Intellect 8 and the Datacraft 6024/5 computers. The inclusion of an actual WCC allows the use of PATRIOT flight-software builds directly in the simulation.

The Airborne Guidance Simulation includes the PATRIOT Radome, Seeker, Guidance Electronics, Autopilot, Missile Borne Computer (MBC) and the Control Actuator Section. The missile hardware with the exception of the Control Actuator Section and the MBC, is mounted on a three-axis flight table. The flight table, driven by the body rotational motion computed in the missile aerodynamic and kinematic model of the hybrid computer, applies base motion to the PATRIOT seeker. The missile looks into an anechoic chamber, where it receives up to four independent target returns from the Multiple Target Simulator. The target returns are synthesized from the illuminator waveform generated by the ground guidance system. The anechoic chamber serves as the free space medium to allow the transmission of simulated target illumination signals from the Multiple Target Simulator to the missile seeker. The purpose of the anechoic chamber is to duplicate, within a constrained volume, the free-space RF environment encountered by the missile. The GTSF anechoic chamber, which is 25 feet long, 14 feet high and 14 feet wide, is sufficiently large so that characteristic phase patterns of target reflected signals are established as in free space.

GTSF VALIDATION RESULTS

Since the complexity of the GTSF is comparable to that of H1, a similarly structured approach to validation was followed. A formal GTSF validation plan was prepared and a systematic approach to both subsystem and system level validation was established. However, the hardware-in-the-loop nature of the facility clearly leads to some differences in the way in which subsystem validation was accomplished. Validation of the PATRIOT hardware resident in the GTSF was not considered to be a requirement, but was accomplished through a configuration audit. Results from acceptance and integration tests of hardware and software, at various levels of GTSF assembly, provided the basis for performance verification of this equipment. Special tests were performed on the hardware/simulation interfaces. Also, many of the computer (mathematical) models in GTSF are identical to ones used in the H1, e.g., the aerodynamics model. No new validation was required once it was established that a model was identical through comparison of simulation code. Where models were not identical, comparison to the appropriate validated H1 model was considered an acceptable basis for establishing validation of a GTSF model.

Simulation of complex ECM environments that could not be modelled in H1 is one of the key advantages of the GTSF. Accordingly, considerable emphasis in the subsystem model validation was placed on testing the RF energy source and environmental models. These tests included comparisons of signals at various points within the equipment for proper scaling and interfacing, checking signal representations with other more extensive model results, and comparison of simulation results to flight test records.

Many photographic comparisons were made to validate the signals delivered at the interface with the PATRIOT system receivers. In these tests, the signal amplitude, bandwidth, and frequency characteristics at the output of the Waveform and ECM generators is compared to the corresponding signal delivered as an input to one of the system receivers. A close match of the spectrum was required. Similar comparisons were also made between the output of the facility Waveform Generator and the signal delivered at the antenna array in the anechoic chamber where the RF signal is radiated to the missile seeker.

As another example, consider the representation of ground clutter effects. Here, the validation of both hardware and software elements was accomplished through inspection of the signal spectrum at key points and comparison of the spectral data to similar results obtained with a complex, all digital clutter spectrum analysis program. Figure 10 is typical of these comparisons, showing the amplitude characteristics predicted by the analysis program and selected points produced within the GTSF.

Flight test records permitted comparison of all important target tracking parameters, including such variables as signal to noise ratio, boresight angle tracking errors, and range and doppler tracking errors. One of the signal to noise comparisons is presented in Figure 11; as can be seen, the results are quite similar once an appropriate correction to the GTSF preflight data is made. This correction is typical of what is revealed as part of the extensive analysis which must be done during the validation process. In this case, it was learned from independent data sources that the target cross-section was higher and the jamming power lower than was scripted. Rather than rerun the GTSF data (facility time is tightly scheduled) an obvious adjustment of the GTSF preflight data could be made.

The systems level validation of GTSF was carried out in a manner essentially the same as that conducted for H1. The key system parameters previously identified (see Figure 5) were compared, for GTSF versus flight test results, as well as the track loop variables described above. Again, considerable engineering judgment had to be applied in assessing the acceptability of the simulation predicted boundaries in comparison to the actual flight data. This was even more true in validating the GTSF, since due to schedule restrictions the facility was generally not available to rerun the simulation predictions to account for deviations of the flight test from its planned scripting. Accounting for these differences, acceptable agreement between GTSF predictions and flight results was obtained for such variables as trajectory components, velocity, missile accelerations, body rates, and seeker gimbal angles. The comparisons were made for five intercept conditions selected to represent the altitude-range region of PATRIOT intercept capability.

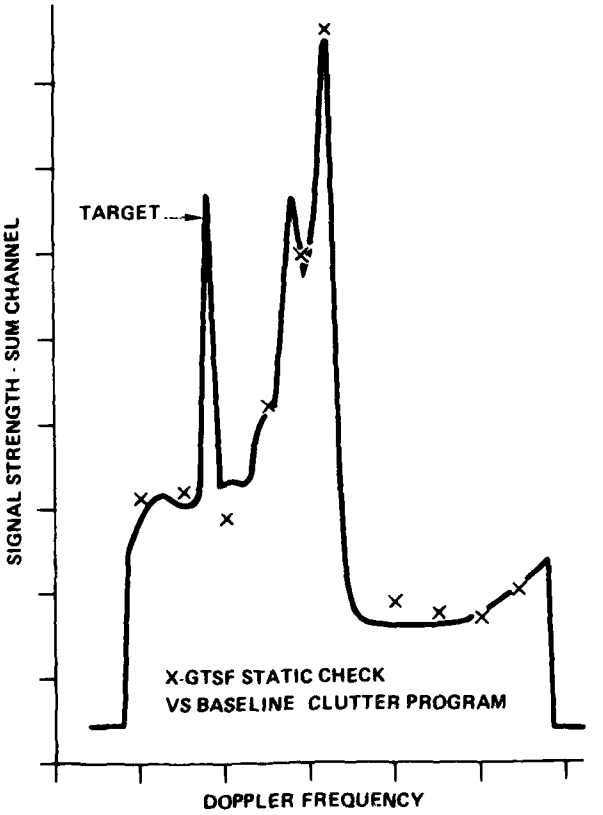

Figure 10. GTSF Clutter Validation Data.

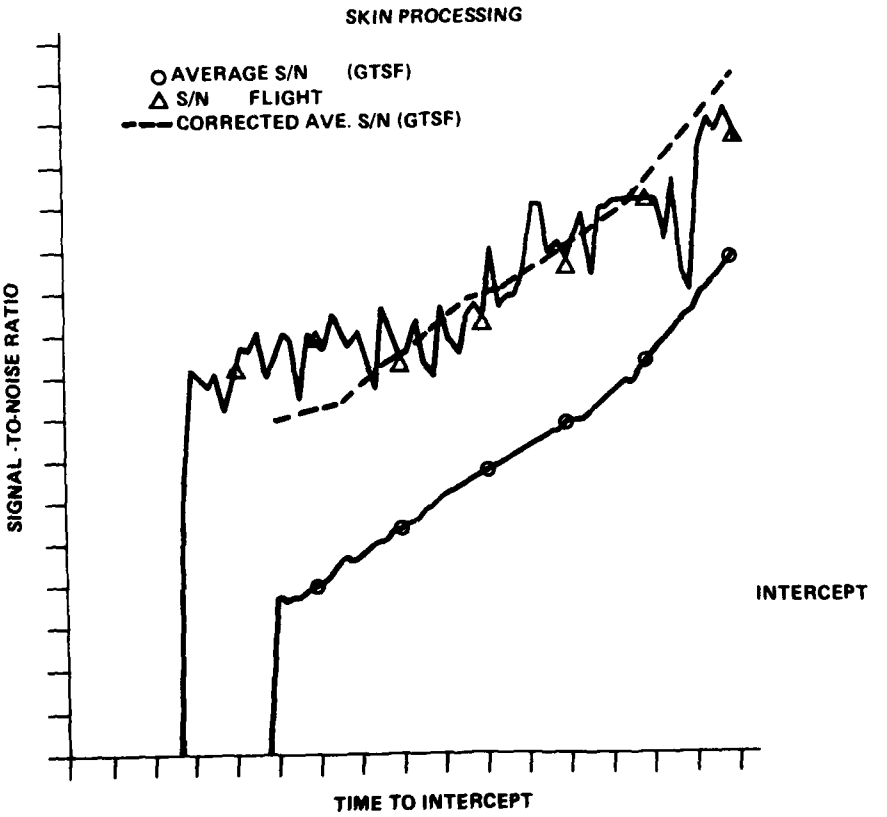

Figure 11. Typical GTSF versus Flight S/N Comparison.

As with H1, the final step in GTSF validation was to apply K-S hypothesis testing to statistical miss distance distributions obtained from simulations and the corresponding flights. In this comparison, there were 26 flight tests suitable for use and a corresponding sample size of 566 GTSF Monte Carlo data points. The results are presented in Figure 12; the statistical hypothesis that the two samples came from the same population was passed at the desired level of test significance. The Validation Committee concluded that GTSF subsystems and system models are representative of PATRIOT and are adequate for system performance demonstration.

COST EFFECTIVENESS OF SIMULATION VALIDATION

Cost effectiveness of the validation activity must of course be considered in planning such an effort. In examining the cost effectiveness, one must be careful to recognize the ancillary benefits to the system development process to be gained from simulation validation (Reference 4). Although the cost of validation may in fact be justified solely by the importance of decisions made on the basis of simulation performance predictions, the benefits to the overall system development process must also be considered in assessing the worth of the validation task.

There are two basic approaches utilized in validating a simulation. One technique is to make extensive comparisons, at both the subsystem and system level, between simulated results and actual test data. These comparisons can be deterministic in nature or take into account the statistical variation of both test and simulation data. The criteria for establishing validity are primarily engineering judgments made on the comparisons. The second technique is to establish a number of key indicators of system performance, such as velocity history or miss distance, and compare statistical test and simulation (Monte Carlo) results. The criterion is the passage of appropriate hypothesis tests or other statistical criteria applied to these comparisons.

Experience gained in validating missile system simulations at Raytheon has indicated that a mixture of the two techniques provides the most efficient, effective approach. In general, considerably more emphasis is appropriately placed on extensive engineering comparisons than on the performance of numerous hypothesis tests. These extensive comparisons inherently increase the benefits fed back into the system engineering/development process. One must also recognize the limitations of employing statistical hypothesis testing. In order to validate simulations early enough in the development program to permit their use in making important program decisions, one is faced with a limited number of missiles and other equipment having been built, and an even more limited number of flight tests. The resulting small sample size tends to greatly weaken the strength of most hypothesis tests and makes them quite easy to pass. Furthermore, it is impossible to assume a distribution for many important variables due to non-linear system operation, leading to use of even weaker nonparametric tests.

System development benefits from simulation validation include the uncovering of deficient hardware performance, identification of previously unidentified subsystem characteristics (which might lead to system design changes), and the emphasis validation places on comprehensive test planning, to

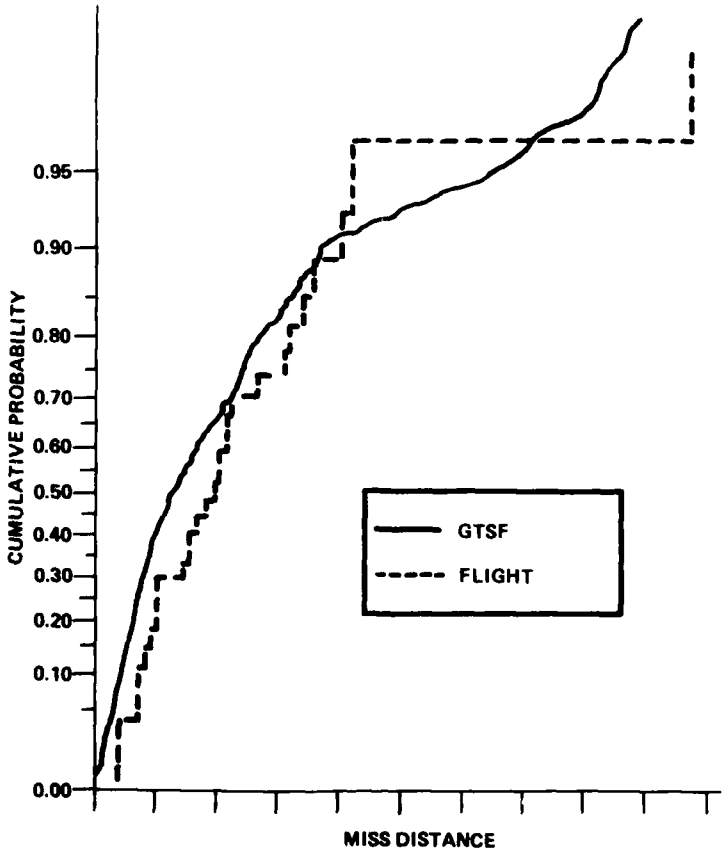

Figure 12. Statistical Comparison of GTSF Miss Distance Results.

name a few. These benefits are best illustrated by some examples that could be encountered during validation:

A sound validation effort includes many comparisons of simulation input parameters with other sub-system test data. Statistical data accumulated from acceptance tests on rate gyro units, for example, would be compared with simulation model inputs (e.g., mean, standard deviation) for drift characteristics, dynamic range, response time, etc. From this comparison, the system designers may uncover performance deficiencies in the overall behavior of the gyros, a failure of the total gyro population to meet specification, a non-normal distribution of the characteristics, or some other important variation that might otherwise be overlooked.

Carrying this example a step further, factory acceptance data would normally include closed loop subsystem response tests on, say, a seeker assembly. A careful comparison of test results with simulated results might reveal additional non-linearities present that were not adequately specified and could degrade system performance. The system design might thus become altered to account for the unexpected characteristic.

To cite another area, the software model must be validated through detailed comparisons, under both static and dynamic conditions, with results from tests conducted on the system software. The simulation representation of the system code must be validated for each functional software block. This process can reveal improper algorithm implementations in the real software, computational sequencing errors, timing deficiencies, and data base mismatches. Thus, the system software is checked against initial design requirements at the same time the simulation model is validated.

Proper consideration of the approach used for simulation validation, and recognition of the benefits accrued, indicates that validation can be a cost effective undertaking. Raytheon's experience indicates that an approach that emphasizes the application of engineering judgment as a criterion rather than extensive use of statistical tests maximizes the cost effectiveness of this vital activity. The resulting detailed engineering analyses frequently can impact the ongoing system development in a positive manner. The end result is a sounder and more effective system design.

CONCLUSIONS

Is this extensive validation effort and the time, cost, and effort it represents really needed? Why not simply test the system to prove it meets specification? The answer to both questions is clear. New systems are generally more capable than their predecessors, which implies they must be tested over ever broader sets of engagement conditions prior to production. Given the cost of developmental hardware, and the time and cost required to conduct flight tests, a large number of system tests is prohibitive. Further, actual system tests cannot possibly address all possible combinations of environmental variations and tolerances on various hardware subsystem elements. These tolerances, as well as the system specifications themselves, are also generally statistical in nature, implying an even larger number of tests at key conditions. The proper coordination of design, simulation, and testing activities resolves the apparent dilemma. As the various subsystems are built and tested, the simulation is updated to reflect as-built characteristics. As tests progress up to the system level, the results are fed back to validate the simulation performance against the field test performance. Having established confidence that the simulation accurately represents the system and its environment, it can be used to extend the field test results and demonstrate specification compliance under a broad set of conditions.

REFERENCES

1. W. C. Morton, "Simulation Validation," Electronic Progress, Vol. XXII, No. 4, Winter 1980.

2. J. L. Graves, V. F. Difini, W. L. Goodall, "Validation of a Complex PATRIOT Guidance Simulation," Proceedings of 1981 Summer Computer Simulation Conference.

3. M. E. Sisle. "PATRIOT Guidance Test and Simulation Facility," Electronic Progress, Vol. XXII No. 4, Winter 1980.

4. W. C. Morton, "Cost Effectiveness of Simulation Validation," Proceedings of the 1981 Summer Computer Simulation Conference.

SIMULATION AVEC ELEMENTS REELS DES MISSILES ANTI-NAVIRES EXOCET

par

Christiane Renon, Guy le Gallo et Gérard Selince
Tactical Missile Division
AEROSPATIALE
2—18 rue Béranger
B.P. 84
F-92320 Châtillon, France

ABSTRACT

This paper is based on simulation results gained on the first 1500 production anti-ship missiles of the EXOCET family (MM 38, MM 40, AM 39, SM 39).

After describing the simulation facilities of the tactical missile division of AEROSPATIALE and in particular the SUBDRAY facility located near BOURGES in FRANCE, the role of simulation is shown from the beginning of the project, through development up to the production of missiles.

The advantage of such simulation during the production phase is emphasized. It is used to improve the quality of missiles, to gain knowledge useful for the development of new versions and as a quality insurance method during production.

1. INTRODUCTION

L'utilisation de simulations avec éléments réels lors de l'étude et du développement d'une système d'armes est largement répandue. Celles-ci permettent en effet d'éliminer la plupart des incertitudes introduites par le recours à des modèles mathématiques d'éléments complexes, d'une part, et d'apprécier le comportement des équipements du système dans des conditions électriques et dynamiques proches de celles d'un vol réel, d'autre part. Il en résulte une sûreté de mise au point des missiles prototypes qui permet de réduire considérablement la durée et le coût des phases de développement et d'essais en vol.

L'intérêt de poursuivre de telles simulations lors des phases d'industrialisation et de production en série est probablement moins connue mais tout aussi important: on peut ainsi contrôler, suivre, améliorer la qualité en production et acquérir des renseignements utiles pour le développement et l'industrialisation de nouvelles versions de missiles de la même famille. Ces raisons peuvent conduire à utiliser la simulation comme un moyen de contrôle systématique de tous les missiles de série.

C'est ce qui est fait à la Division des Engins Tactiques de l'AEROSPATIALE, pour les missiles antinavires de la famille EXOCET, depuis le dépût de leur production en série.

Les enseignements de cette expérience, validée par un taux de réussite en vol supérieur à 90%, sont présentés ci-après pour les 1500 premiers missiles de série produits de 1971 à 1979.

2. DESCRIPTION DE L'INSTALLATION DE SIMULATION EN SERIE

La Division des Engins Tactiques de l'AEROSPATIALE dispose de deux installations de simulation avec éléments réels similaires dans leur principe et complémentaires dans leur utilisation.

La première, implantée en région parisienne, a une vocation de recherche et de développement. La seconde, située au SUBDRAY près de BOURGES, est plus particulièrement orientée vers le suivi des missiles de série.

Ces installations de simulations permettent, en particulier, de représenter le comportement en vol des missiles anti-navire EXOCET c'est-à-dire de missiles qui volent au ras des flots grâce à un altimètre assisté par un système inertiel et dont le guidage final est assuré par un autodirecteur électromagnétique actif à impulsions.

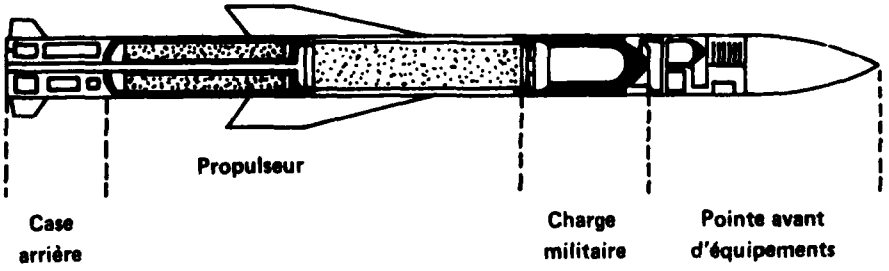

Figure 1 EXOCET MM 38

Dans le cas de l'EXOCET, l'organisation générale des simulations est conforme au schéma synoptique suivant:

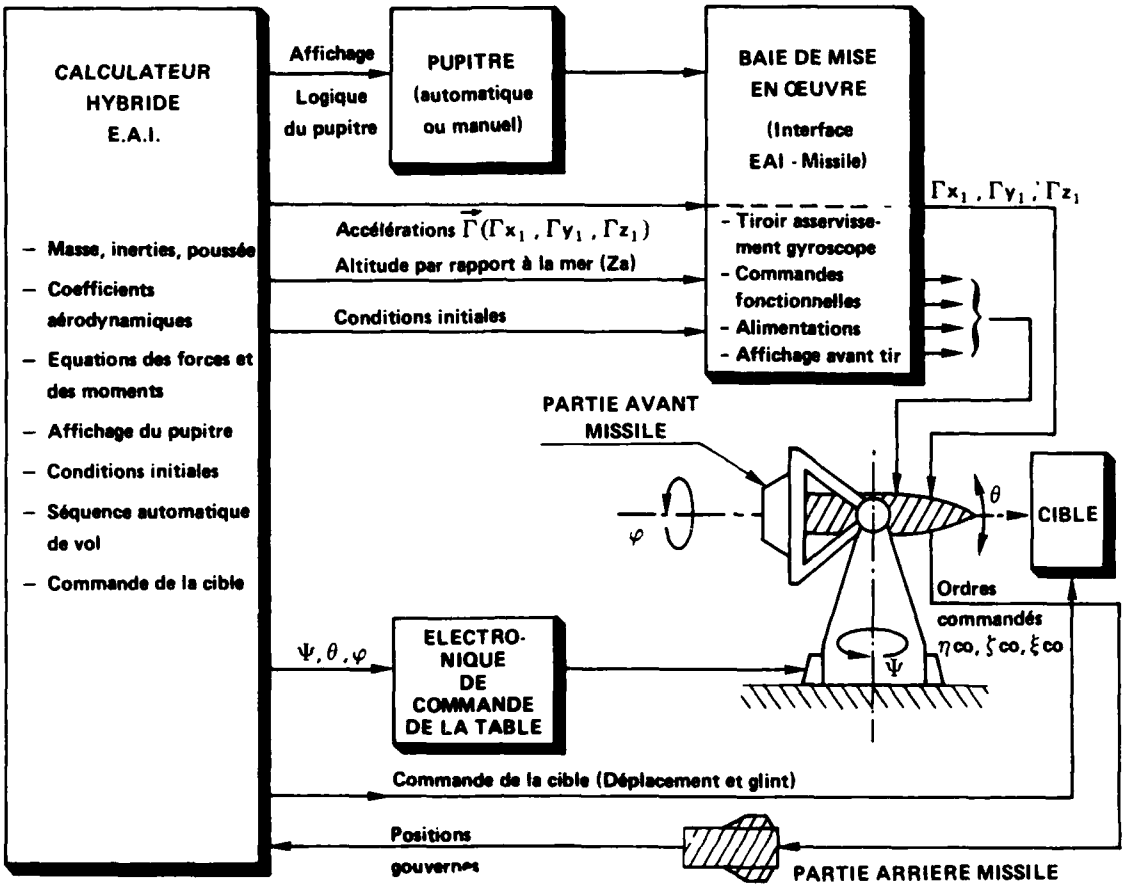

Figure 2

A partir des coefficients aérodynamiques et inertiels du missile, des caractéristiques de poussée du propulseur, etc., un calculateur hybride intègre les équations de la mécanique du vol (forces et moments) fournissant ainsi les accélérations, vitesses, positions et attitudes du missile en fonction de l'évolution du braquage des gouvernes.

Les angles d'attitude du missile (ψ, θ, φ) issus de l'intégration des équations des moments permettent d'orienter les cadres d'une table à 3 degrés de liberté qui porte la partie avant du missile à tester. Cette pointe avant comporte les gyroscopes, l'altimètre, le calculateur et l'autodirecteur, ce dernier étant en poursuite sur un simulateur de cible.

Le calculateur du missile reçoit les informations réelles provenant de l'autodirecteur et des gyroscopes d'une part, les informations accélerométriques et l'altitude du missile au-dessus des vagues restituées par le calculateur hybride d'autre part. Il peut ainsi élaborer les ordres de pilotage — guidage en roulis, lacet et tangage qui sont transmis à la partie arrière du missile par un câble de servitude, et exécutés par les vérins de gouvernes. Les positions de ces dernières, lues au niveau des potentiomètres d'asservissement, sont transmises au calculateur hybride et servent d'entrées aux équations de forces et de moments.

La réalisation pratique de ce type de simulation nécessite que l'installation comporte les principaux sous-ensembles fonctionnels suivants:

— une chambre anéchoïde

— un simulateur de cible permettant de générer un écho représentatif de la cible

— un dispositif permettant de générer le mouvement de la mer "vu" par l'altimètre du missile

— une table 3 axes reproduisant les mouvements angulaires du missile autour de son centre de gravité

— un calculateur hybride (analogique/numérique) et les moyens d'enregistrement des résultats

— une baie d'interface entre le missile à tester, les différents équipements de l'installation de simulation et le pupitre de commande de l'ensemble.

La description de ces éléments qui est faite, ci-après, correspond à l'installation du SUBDRAY qui a servi à contrôler la quasi totalité des missiles de la famille EXOCET.

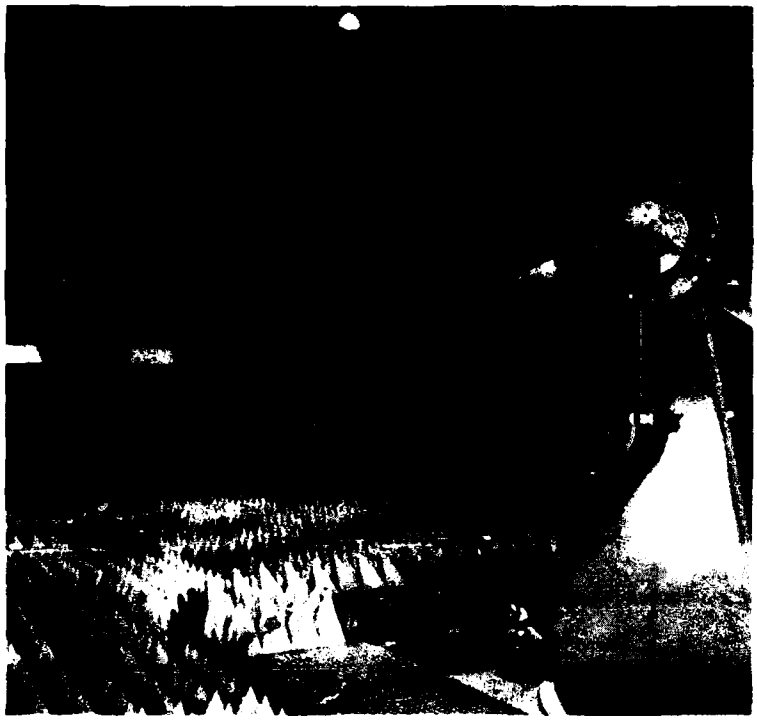

Photo 1 — La chambre anéchoïde et le simulateur de cible

- *La chambre anéchoïde* (photo 1)

C'est une pièce de grandes dimensions (12m × 9m × 6m) contenant le simulateur de cible et la table trois axes. Les murs sont recouverts d'un matériau absorbant dans la bande I (ancienne bande X). Ce matériau, visible sur la photo ci-après, atténue de 40 dB au moins, les réflexions parasites qui autrement perturberaient l'écartométrie de l'autodirecteur.

- *Le simulateur de cible*

Le simulateur d'écho de cible, visible sur la photo précédente, a deux fonctions:

(1) L'émission d'un signal fluctuant représentatif de l'écho d'un navire. Cette fonction est assurée par un générateur hyperfréquence piloté en temps et en amplitude afin de représenter l'évolution de l'écho avec la distance et par un système d'aiguillage permettant d'alimenter l'une quelconque des 32 antennes trièdres visibles sur la photo 1, de manière à représenter les fluctuations angulaires du point brillant (glint). Cet aiguillage est piloté par des enregistrements de glint de cibles réelles, stockés sur bande magnétique.

(2) La représentation du défilement angulaire de la droite missile-but au course de l'interception. Cette fonction est réalisée en commandant, à partir des informations venant du calculateur hybride, le déplacement, le long d'un rail circulaire situé à 8 mètres de la table 3 axes, d'un chariot portant la matrice d'antennes trièdres.

NOTA: L'ensemble de l'installation est conçu pour étudier et tester des équipements et des systemes d'armes de diverses natures. Dans certains cas, il est possible d'augmenter le réalisme des simulations en rétractant entièrement la partie avant de la chambre anéchoïde afin de permettre aux senseurs portés par la table 3 axes de poursuivre une cible réelle, terrestre ou aérienne (Photo 2).

- *La génération du mouvement de mer:*

Le mouvement de la mer "vu" du missile est généré par un programme arithmétique puis enregistré sur bande magnétique. On peut ainsi solliciter le missile par divers "bruits de mer" analogues à ceux qui affecteraient le signal altimétrique d'un missile volant au-dessus d'une mer pouvant aller jusqu'au haut de force 6.

- *La table 3 axes*

La table 3 axes est un système électro-hydraulique de précision qui recopie les mouvements angulaires de roulis, lacet et tangage élaborés par le calculateur hybride. Fabriqués par la Société CARCO, à la demande d'AEROSPATIALE, elle peut entraîner, avec des performances dynamiques élevées, une charge de 300 kg. Ainsi l'ensemble de la partie avant du missile, qui comporte la totalité des équipements de guidage, peut-il être disposé sur la table sans aucun démontage, ce qui est particulièrement important pour une recette de matériels de série. Bien entendu, la charge militaire et l'ensemble propulsif qui, dans le missile complet, prennent place entre la partie avant et la partie arrière, sont exclus des simulations. L'assemblage de toutes ces parties est effectué après le contrôle en simulation.

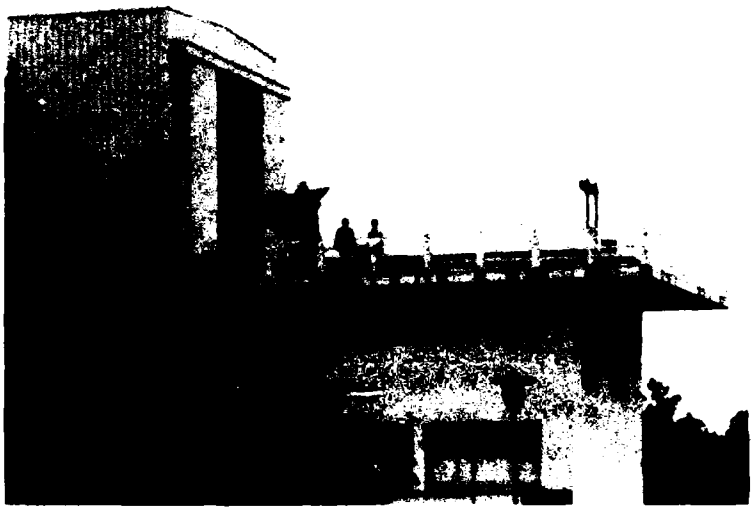

Photo 2 — La table 3 axes en position de poursuite d'une cible aérienne, toit et parois de la chambre rétractés.

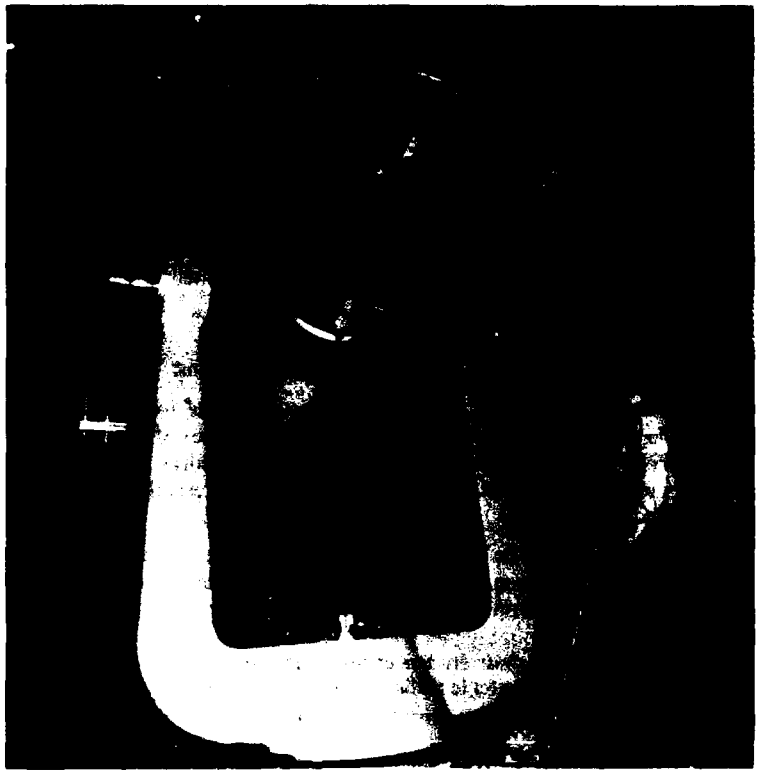

Photo 3 — Une pointe avant d'EXOCET montée sur la table 3 axes.

- *Le calculateur hybride analogique — numérique*

C'est un calculateur hybride EAI possédant 148 amplificateurs analogiques et une unité arithmétique dotée d'une mémoire central d'une capacité de 32 kilomots de 16 bits et d'un cycle de base de 1,2 µs.

Il permet de calculer, en TEMPS REEL, la trajectoire du missile à partir d'un modèle mathématique très complet de l'aérodynamique et de la propulsion. La surveillance du vol se fait grâce au tracé de la trajectoire et de l'enregistrement d'un grand nombre de paramètres caractéristiques. Le calculateur met en oeuvre automatiquement dès la fin du tir simulé un programme de test à partir de valeurs mises en mémoire au cours du déroulement de la trajectoire; le résultat de ce test apparaît sur l'imprimante de la machine quelques secondes après la fin du tir.

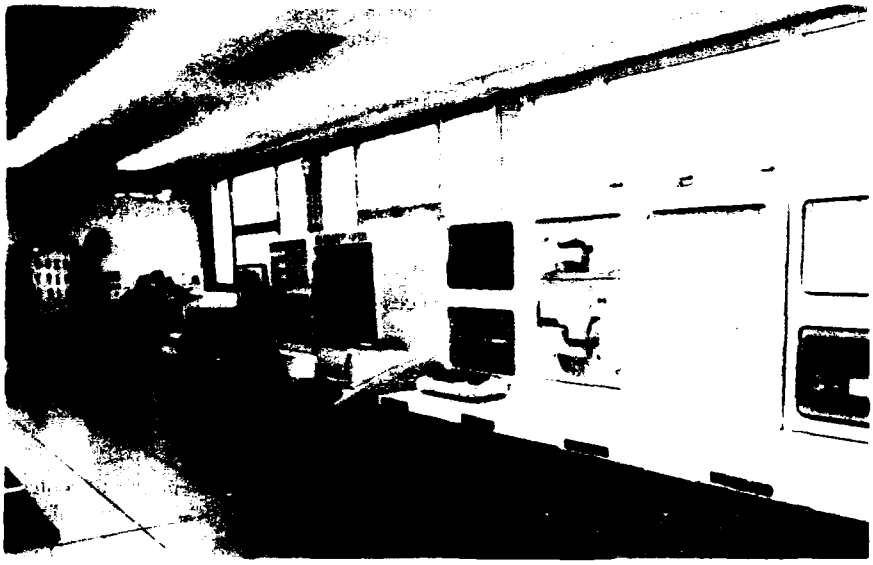

Photo 4 — La salle de calculateurs.

- *La baie d'interface*

Elle assure les liaisons entre le missile à tester et l'installation de simulation et, en association avec le pupitre de commande, simule l'installation de tir réelle lors des séquences de mise en oeuvre et d'initialisation des différents sous-ensembles du missile.

3. ROLES DE SIMULATIONS, DE L'ETUDE A LA FABRICATION EN SERIE

Dans le cadre du programme EXOCET, les simulations avec éléments réels sont intervenues en permanence, depuis le début de l'étude jusqu'au stade de la production en série, tout en voyant leurs objectifs évoluer avec l'avancement du programme.

Les simulations d'étude et de développement ont été réalisées dans le centre des Gâtines proche des bureaux d'étude de la région parisienne; les simulations de recette en série ont été exécutées au centre du SUBDRAY installé dans des locaux voisins des ateliers pyrotechniques d'assemblage final des missiles. Le transfert d'un site à l'autre a été accompagné du passage en simulation de 5 missiles de début de série sur les deux installations afin de vérifier que les conditions d'acceptation étaient bien identiques dans les deux centres.

3.1 Les simulations d'étude et de développement

Leur rôle, maintenant classique, comporte trois étapes:

— *Les simulations d'étude* à proprement parler qui sont une copie fidèle des simulations purement numériques dont elles reprennent les modèles mathématiques. Au fur et à mesure de la réalisation des équipements prototypes (calculateurs, gyroscopes, vérins, autodirecteur...) ceux-ci sont substitués aux modèles mathématiques, permettant ainsi une analyse comparative des performances réelles des matériels et des performances prévues.

A titre d'exemple des retombées possibles, et sans parler des classiques rectifications d'erreurs de signes, signalons, pour l'EXOCET, la mise en évidence d'une oscillation non prévue de la chaîne d'autoguidage due à l'action conjuguée d'un seuil trop important des moteurs d'asservissement de l'antenne et de la valeur de l'incrément d'intégration numérique du signal d'écartométrie.

De façon plus générale, cette phase de l'étude permet de valider et d'améliorer la définition des modèles mathématiques, d'étudier individuellement la conformité des matériels aux spécifications initiales et, le cas échéant, de préciser ces spécifications sur certains points insuffisamment appréciés au niveau de l'étude théorique.

— *Les simulations d'intégration prototypes*
Ces simulations interviennent au stade suivant de développement du missile lorsque, l'ensemble des équipements ayant été développé, il convient de s'assurer du bon fonctionnement global du système. On peut, à ce stade, déceler des défauts de cohabitation entre des équipements du missile ou du poste de tir (courante de masse, parasites...), s'assurer du bon fonctionnement des séquences avant et pendant le vol, évaluer l'influence de certaines combinaisons de tolérances non prévues etc.

Pendant cette phase, qui a duré 6 mois environ, la simulation a permis d'éliminer nombre d'anomalies qui, tel un parasitage systèmatique des ordres de guidage provoqué par la mise en action des moteurs de précession d'un gyroscope, créaient des défauts difficilement visibles autrement que sur les ordres ou la trajectoire calculés en boucle fermée.

D'une manière plus génèrale, la simulation permet de mettre en evidence des défauts de principe, souvent mineurs et parfois fugitifs, moins par la mesure de leur valeur élémentaire, qui peut être faible, que par leurs conséquences sur la mission évaluée dans des conditions de fonctionnement très proches de celles d'un vol réel. Cette particularité, propre au fonctionnement en boucle fermée, est d'une extrême efficacité pour révéler des défauts non décelables par les intégrations statiques, effectuées par ailleurs, dont la simulation devient ainsi le complément indispensable.

— *Les simulations de recette des missiles d'essais et d'évaluation*

Ces simulations, qui sont en quelque sorte le prolongement des simulations d'intégration précédentes, permettent:

- d'améliorer la qualité des missiles
- d'interpréter rapidement certains résultats obtenus en vol
- d'améliorer la définition des futurs missiles de série.

— *L'amélioration de la qualité des missiles d'essais:*

Le contrôle en simulation représente la seule étape de la vie du missile où, avant son tir effectif, toutes ses fonctions sont testées pendant la durée d'un vol réel dans des conditions dynamiques proches de la réalité tout en subissant simultanément une épreuve thermique, mécanique et électrique réaliste. Cette épreuve est d'autant plus significative qu'elle est répétée pour chaque missile un grand nombre de fois en faisant varier les conditions de tir de manière à mettre en oeuvre l'ensemble des conditions d'emploi possible de l'arme. Il en résulte qu'un grand nombre de pannes ne sont détectées qu'à ce stade, soit parce qu'elles étaient latentes et ont été révelées par l'épreuve subie (déverminage), soit parce qu'elles n'étaient décelables qu'au travers des conséquences qu'elles entrainent dans un fonctionnement en boucle fermée dans des conditions proches du vol réel. En effet, l'analyse des résultats de simulation comportant un examen visuel de l'évolution d'un grand nombre de paramètres caractéristiques, des comportements, non prévus dans les tests de recette hors simulation, peuvent être décelés et éliminés s'ils ont, ou risquent d'avoir, une conséquence sensible sur les performance en vol du missile.

A cet égard, l'exemple de l'EXOCET MM38 est significatif de l'apport des simulations sur le taux de réussite des essais en vol puisque sur 19 tirs de développement (dont 1 missile à préguidage et 18 missiles complets autoguidés) les trois échecs partiels observés ont tous eu pour origine une séquence qui, pour des raisons pratiques, (risques de détérioration) n'était pas exécutés physiquement en simulation. Il s'agissait, en l'occurence, de l'extraction de la prise ombilicale qui provoquait le parasitage d'une information transmise par l'installation de tir.

— *L'interprétation de certains résultats de tir*

Bien entendu, l'interprétation des résultats de tir passe par l'analyse des résultats des mesures externes et internes effectuées pendant le tir, l'utilisation des modèles mathématiques du vol et certains essais et études complémentaires.

Cependant, dans un certain nombre de cas, le recours à la simulation avec éléments réels se révèle, de par son fonctionnement en boucle fermée, comme le moyen d'investigation le plus rapide et le plus efficace pour mettre en évidence l'origine d'un comportement anormal. C'est ainsi que la cause d'un transitoire d'altitude anormalement bas, observé lors du premier vol de missile, a pu être identifiée (écrêtage insuffisamment franc des grands ordres de tangage) et éliminée pour les tirs suivants. Par opposition, le parasitage évoqué au paragraphe précédent, découvert au 6ème tir, et dont la cause première n'était pas intégrée dans la simulation, n'a pu être interprété, après 2 autres échecs, qu'au 18ème tir.

— *L'amélioration de la définition des futurs missiles de série*

La simulation des missiles d'essais constructeur, portant sur un nombre déjà significatif d'équipements et représentant un nombre considérable de tirs fictifs (plusieurs milliers), permet de recueillir des éléments statistiques objectifs d'appréciation du comportement du missile. Ces statistiques qui sont enrichies en permanence, et serviront ultérieurement à définir des clauses de recette adaptées, conduisent dans un premier temps, à parfaire la définition du futur missile de série. C'est ainsi qu'une imprécision trop importante des paliers d'altitude, due à la dispersion, d'un missile à l'autre, des courants de polarisation d'un amplificateur, a pu être mise en évidence. Le choix d'un amplificateur de classe supérieure a permis de corriger ce défaut qui ne pouvait être mis en évidence et analysé que lors d'un fonctionnement d'ensemble en boucle fermée.

En conclusion, lors de cette phase importante d'un programme, la simulation peut être un moyen extrêmement efficace pour améliorer le taux de réussite des essais en vol, compléter et enrichir leurs enseignements, apporter une interprétation rapide de certains incidents de vol et améliorer la définition du missile de série. Les délais et les coûts des essais et de la phase d'industrialisation qui suit sont ainsi considérablement diminués.

3.2 Les simulations de recette des missiles de série

Compte tenu des résultats positifs obtenus lors de la phase de développement, l'industriel a décidé de faire subir à tous les missiles de série EXOCET une épreuve de recette en simulation. Cette épreuve intervient dans le cycle de contrôle après un premier contrôle statique du missile non chargé, est suivie d'un second contrôle statique puis, après chargement et assemblage du missile, d'un contrôle final du missile complet chargé dans son conteneur de tir.

Pour assurer la validité des recherches et des conclusions, les équipements sont laissés dans la configuration la plus proche possible de la normale de manière à respecter les effets thermiques, mécaniques ou de liaison (courants de masse, effets capacitifs...) dont on a pu vérifier l'importance. En particulier, les parties avant et arrière du missile sont testées dans leur configuration exacte de vol, seuls les éléments pyrotechniques (propulseur, charge militaire...) étant exclus de la simulation.

La recette d'un missile est alors basée sur l'acceptation des performances de 10 trajectoires simulées couvrant la plupart des configurations de tir opérationnelles possibles en combinant l'influence de 5 distances de tir, 8 dépointages initiaux, 7 configurations des paramètres autodirecteur, les 3 paliers possible d'altitude, 4 états de mer, 4 niveaux de glint et 7 configurations de vitesse de la cible.

Les critères de recette sont issus de l'expérience statistique acquise au cours des simulations d'étude et de développement. Ils sont précisés le cas échéant, à l'aide des enseignements complémentaires recueillis lors des simulations de série.

Un programme de test mis en oeuvre par l'unité arithmétique du calculateur hybride signale automatiquement les paramètres ou performances hors tolérances ce qui permet au contrôleur de déclencher un processus de recherche de panne. En complément, l'examen visuel de l'enregistrement de 34 paramètres significatifs est effectué en différé afin de détecter éventuellement des imperfections non prévues dans le programme de contrôle automatique.

Si une panne détectée n'a pas une cause répertoriée ou évidente, une localisation et une identification d'avarie sont entreprises en remplaçant tel ou tel sous-ensemble du missile à recetter par un sous-ensemble de référence. Le sous-ensemble identifié en panne est alors remplacé et la recette en simulation reprise dans son intégralité. En cas de panne présentant un caractère nouveau et non accidentel, une étude de principe est déclenchée et une intervention effectuée auprès du secteur de fabrication ou du sous-traitant concerné.

Cette procédure s'est révélée extrêmement efficace pour assurer la qualité individuelle des missiles *dès le début de la production*, améliorer progressivement la qualité d'ensemble des fabrications et fournir des enseignements utiles pour la définition des équipements destinés aux versions nouvelles de missiles de la famille.

L'action sur la qualité individuelle

Chacun des constituants d'un missile subit, bien entendu, une recette et des contrôles classiques d'abord unitairement puis en chaîne. Cependant, ceci reste insuffisant, tout du moins en début de production, pour détecter l'ensemble des imperfections susceptibles d'affecter les matériels. En effet, pour tout système complexe, il est extrêmement difficile de définir a priori l'ensemble des tolérances à respecter et des tests à effectuer pour assurer la qualité recherchée. Bien sûr, une étude poussée sur ordinateur s'appuyant sur les résultats de laboratoire et d'essais en vol fournit une bonne approche, mais elle reste nécessairement imparfaite et incomplète comme toute étude s'appuyant sur un modèle mathématique aussi fidèle soit-il. La simulation explorant, grâce à son fonctionnement en boucle fermée, les domaines et les comportements non couverts par les spécifications initiales de contrôle exerce une action complémentaire particulièrement important pour la qualité individuelle des missiles des premières tranches de production.

Le tableau suivant donne, dans le cas de l'EXOCET MM38, quelques exemples significatifs de défauts décelés et corrigés grâce aux contrôles en simulation.

Défaut détecté	Conditions d'apparition du défaut et conséquences sur le vol simulé
— Micro-coupures dans des résistances	Altitude de vol finale aberrante en présence de vibrations et d'échauffement.
— Contacts insuffisants dans des prises véhiculant des informations à faible courant.	Conséquences variées pouvant aller jusqu'à l'absence d'accrochage de l'autodirecteur provoquée par un afficharge erroné des données de tir.
— Relais défectueux	Altitude de vol ou autoguidage anormaux pour les configurations de tir comportant des accélérations angulaires importantes.
— Dérive anormale de gyroscopes	Erreurs de préguidage importantes, provoquées par l'action combinée de l'échauffement et des sollicitations mécaniques, pouvant entraîner un non accrochage de l'autodirecteur.
— Niveau anormal de bruit dans la boucle interne de stabilisation de l'auto-directeur	Instabilité de la trajectoire autoguidée pour certaines conditions de dépointage.
— Variation anormale avec la température d'un gain de l'autodirecteur.	Instabilité de l'écartométrie en boucle fermée après échauffement.
— Positionnement anormal d'un câble entraînant un blocage de l'antenne de l'autodirecteur.	Absence d'autoguidage pour certaines configurations de tir à fort dépointage.
— Bruit haute fréquence dans la boucle interne d'asservissement d'un vérin de gouverne.	Anomalie du transitoire de départ provoqué par une consommation électrique trop importante modifiant les courants de masse d'un temporisateur.

On notera que, pour tous ces exemples, les matériels en cause avaient subi avec succès les épreuves de recette et de contrôle statique, et que, souvent, il fallait réunir plusieurs conditions (dynamiques, thermiques, mécaniques...) pour mettre le défaut en évidence.

Incidence sur la qualité d'ensemble de la fabrication et les coûts

Les quelques exemples précédents montrent la difficulté de définir en début de production des contrôles efficaces pour maîtriser des phénomènes d'orgines extrêmement diverses pouvant aller jusqu'a certains détails, non codifiés, des processus de fabrication. L'analyse statistique et l'interprétation systématique des résultats de simulation permettent d'améliorer progressivement la définition des tolérances nécessaires et suffisantes pour assurer la qualité et suggèrent des aménagements utiles des gammes de fabrication, de recette et de contrôle permettant d'accroître la qualité tout en diminuant les coûts par abaissement du taux de rebuts et du nombre d'interventions pour pannes.

Bien sûr, à partir d'un certain rang de fabrication, il n'est plus systématiquement rentable d'introduire des modifications dans les gammes de fabrication ou de recette, l'investissement nécessaire pouvant dépasser le gain possible. C'est ainsi qu'il est apparu préférable au rang 1000 de fabrication de laisser la simulation seule capable de détecter certains types de défauts (0,12 en moyenne par missile) alors que des aménagements des installations et des procédures de contrôle ainsi qu'un complément de tests dynamiques en recette unitaire auraient théoriquement permis de les déceler à d'autres stades du cycle de production. Mais de telles actions étaient inutiles puisqu'elles n'auraient pas diminué significativement les coûts et que, par ailleurs, la simulation était de toutes façons maintenue. En effet, à ce stade, la simulation restait utile par son action de déverminage mais, surtout, elle était devenue un moyen privilégié pour détecter l'incidence des inévitables évolutions de réalisation sur la qualité et les performances du missile même et, tout particulièrement, lorsque ces variations, volontaires ou non, sont à l'intérieur des spécifications élémentaires de fabrication ou de recette. C'est ainsi qu'une utilisation imparfaite d'un nouvel outillage destiné à réaliser des connexions a pu être corrigée rapidement après que des ruptures ont été observées en simulation.

La sensibilité de la simulation à de tels incidents est illustrée par le graphique suivant qui présente l'évolution du nombre moyen des missiles refusés en simulation pour précision insuffisante du préguidage.

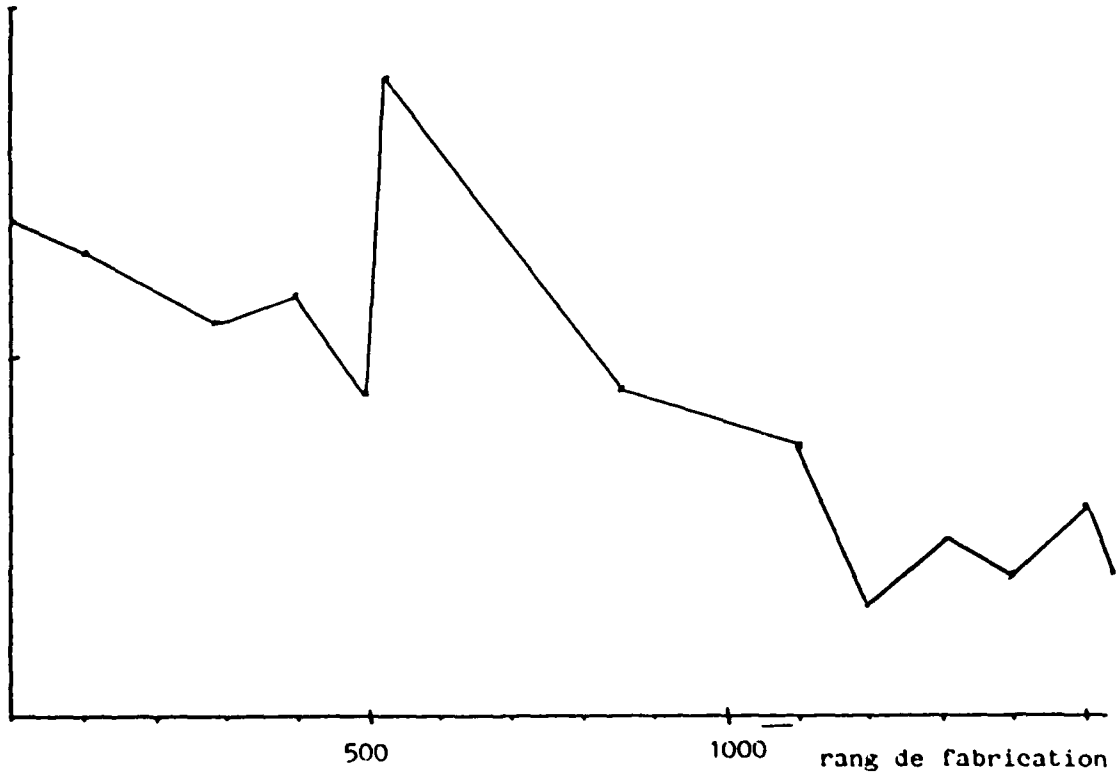

Figure 3

La très franche discontinuité qui apparaît au rang 500 de fabrication coïncide avec l'arrivée en simulation de missiles équipés d'une nouvelle série de gyroscopes. Ces gyroscopes présentaient, en simulation seulement, des dérives incompatibles avec l'efficacité garantie du système d'armes. L'analyse du phénomène a montré que les tests de recette unitaire effectués sur table SCORSBY en présence de mouvement sinusoïdaux étaient, compte tenu d'un effet d'activation des roulements, trop optimistes et qu'il en était de même des tests en statique pour lesquels les durs des roulements masquaient les dérives. Par contre, en simulation, les mouvements angulaires, très voisins de ceux d'une trajectoire réelle, entraînaient de dérives importantes.

De façon très générale, la simulation est un moyen très sensible pour détecter les variations de fabrications pouvant avoir une consequence sur la mission. Dans tous les cas, la politique adoptée a été d'expliquer et d'éliminer tout écart sensible de comportement des missiles par rapport au comportement habituellement observé même si cet écart pouvait être considéré comme acceptable à cet instant de la vie du missile. Cette politique s'est révélée extrêmement efficace en permettant d'obtenir une grand constance de la qualité des missiles, ainsi qu'un taux de retour en usine des missiles clients et un coût de maintien en condition des matériels particulièrement bas. Ceci a permis, par ailleurs, d'espacer les contrôles périodiques ce qui est tout particulièrement intéressant pour les versions de l'EXOCET embarquées sur navire.

En résumé, la simulation a largement participé à l'obtention, dès le début de la production, du niveau de qualité requise pour les missiles EXOCET. Ce niveau a pu être atteint et même dépassé pour un coût raisonnable en évitant un resserrement inutile des tolérances ainsi que la multiplication coûteuse des contrôles élémentaires et des tirs de missiles réels.

Incidence sur la définition des équipements des missiles de la famille

Les enseignements obtenus lors des simulations de série MM38, premier missile de la famille, ont permis d'améliorer la définition des équipements des versions suivantes: Air-Mer AM 39, Mer-Mer longue portée MM 40, sous-marin-mer SM 39. C'est ainsi qu'en reprenant l'exemple déjà évoqué des dérives de gyroscopes, une étude particulière conduite sur l'installation de simulation de série, a permis d'analyser les causes premières du comportement observé. Il en est résulté pour le constructeur une meilleur connaissance du gyroscope, de ses problèmes de déformation lors d'un choc thermique, des matériaux à utiliser de préférence, la définition d'un nouveau processus de réglage des précontraintes des roulements ainsi que de nouvelles clauses de recette avec des moyens différents donnant de meilleures garanties d'adaptation du matériel à la mission.

4. CONCLUSION

Cet exposé résume l'usage fait par AEROSPATIALE d'une simulation avec éléments réels depuis le stade de la conception jusqu'à celui de la sortie du 1500ème missile EXOCET.

Au cours cette expérienc, la simulation s'est révélée être autant un remarquable moyen d'étude et de développement — ce qui était connu — qu'un moyen industriel puissant permettant, pour un coût modéré, d'obtenir dès le début de la production un niveau de qualité supérieur à l'objectif fixé pourtant élevé. Sur le plan commercial, l'industriel a bénéficié de ce fait d'une satisfaction et d'une confiance accrues de la part de ses clients.

Le succès de cette opération conduit AEROSPATIALE à préparer l'extension de la méthode à la recette pour prélèvement de missiles de grande ou de très grand série en remplacement partiel des recettes en vol pratiquées jusqu'ici pour ces classes de missiles.

HELLFIRE SYSTEM MODEL VALIDATION

by

R.V.Hupp
Rockwell International
4300 East Fifth Avenue
PO Box 1259
Columbus, OH 43216, USA

SUMMARY

This paper discusses the hybrid simulation facilities, system modeling and the model validation process for a U.S. Army missile development program.

Two fundamental problems in missile system design and development require an accurate, valid, proven computer simulation; analysis of errors and performance verification. The classical approach to error analysis is by Monte Carlo simulation. System performance over the entire spectrum of operating conditions cannot be verified by field tests alone due to economic constraints; it must be verified by simulation. Verification of total system performance was a major analytical effort in the development program. A complete hybrid computing facility was procured and dedicated to this end. Two independent system simulations were developed; a hybrid simulation and an all digital simulation.

The development program has been very successful. The extensive simulation conducted during the conceptual, proto-type development and production design phases played a major role in this success. Over two million simulated missile launches were conducted to evaluate and optimize missile system design under the myriad of conditions in which it must operate. For the simulation to fulfill its role it had to be accurate, valid and cost effective. Careful attention was given to modeling of each element of the system throughout the entire ten-year development cycle to verify and validate the entire simulation. Test data was compared to simulation data on a continuing basis and when necessary, math models were revised. The entire validation process consisted of: laboratory characterization test of each system element, real time simulation with hardware-in-the-loop for direct comparison with models, captive flight test, and full system test firings.

The computer simulation equipment procured for this effort has been found to be quite adequate for the task and cost effective. The facility was used one hundred percent of the time during peak effort to support specific studies; that is, 24 hours a day, 7 days a week.

LIST OF SYMBOLS

C_{A_p}	Axial force coefficient, power on.
$C_{(sub)}$	Aerodynamic coefficient - standard aeronautical subscripts (subs) (i.e., C_x is coefficient associated with the X axis force equation).
$\Delta C_{(sub)}$	Incremental aerodynamic coefficient.
$F_{(sub)}$	Monte Carlo error term associated with Aerodynamic equation -- subscripts references term to specific aerodynamic coefficient or equation.
F_V, F_B	Flight path and body axis force vectors.
G	Gravitational acceleration.
Hm	Control surface hinge moment
I_{xx}, I_{yy}, I_{zz}	Moments of inertia.
L,M,N	Aerodynamic moments.
ℓ	Aerodynamic reference length.
p,q,r	Attitude rates in body axis.
pv,qv,rv	Attitude rates in flight path axis.
S	Aerodynamic reference area.
X, Y, Z	Aerodynamic forces.
α, β	Angle of attack and sideslip.
$\lvert\delta\rvert$	Absolute value of the sum of the control surface deflection terms.
$\delta_p, \delta_q, \delta_r$	Control surface deflections terms
ρ	Air density.
ϕ, θ, ψ	Euler angles transformation angles.
α', ϕ'	Body axis to body prime axis transformation angles.
τ	Time constant.

INTRODUCTION

The HELLFIRE missile is a laser guided anti-armor weapon developed for the U.S. Army. It is the primary weapon for the AH-64 advanced attack helicopter. Predominant characteristics are low cost, modular construction, long range, and high accuracy. Verification of total system performance was a major analytical effort in the development program. A complete hybrid computing facility was procured and dedicated to this end. Two independent system simulations were developed; one being the hybrid simulation and the other, an all digital simulation programmed for the IBM 370/168 and the CDC Cyber 176 computers.

Two fundamental problems in missile system design and development which require an accurate, valid, proven computer simulation are (1) analysis of errors and (2) system verification. The missile system design must be optimized to provide the best performance in the real world environment characterized by random conditions and noise. The classical approach to error analysis is by Monte Carlo simulation. Verification that the missile system performance meets the procurement specification over the entire spectrum of operating conditions cannot be accomplished by test alone; it must be verified by simulation.

Monte Carlo Method

A basic problem in missile system design is prediction and optimization of performance in a real world environment characterized by noise, parameter variations and errors. The problem becomes one of estimating random process statistics of the output of a complex system which results from a multitude of random forcing functions inputs, parameters and initial conditions.

The Monte Carlo method is a powerful computational technique in which repeated independent experiments are performed which yield classical random-sample statistics. Missile system dynamics are simulated for a missile firing. Statistically independent random forcing functions, initial conditions, and parameters are generated for successive computer runs. In this manner, statistically independent sample functions of the random process are generated and accumulated over a number of computer runs. Statistically independent computer runs constitute independent similar experiments, and sample averages used as estimates of ensemble averages are classical-random-sample statistics. It follows that the well established theory of random-sample statistics can be brought to bear on the critical question of estimate fluctuations; in particular, sample averages computed from large samples can often be considered as approximately normal random variables, so that the classical t test, analysis of variance, apply. The Monte Carlo method is often the only way to study a process involving random inputs and parameters. One of the most important applications is error analysis for control and guidance systems subject to random inputs; in particular, prediction of missile hit probability and mean-square miss distance.

Missile System Verification

A fundamental problem in verifying that a missile system meets the entire specification over the full range of operating conditions is cost. This is because system level tests are destructive; when a missile is launched it is destroyed upon impact. To verify (prove by test) that a multimode missile system meets all requirements over the full range of operating conditions such as temperature, launch attitudes and angular rates, launch range, mode, etc., etc., and combinations thereof, it is easy to see that a very large number of tests would be required. The number is multiplied a thousand fold when system errors are considered; each test firing is but a sample of one and a large number of samples are required to provide high statistical confidence that the results describe the true performance of the missile. It is easy to see that it is cost-prohibitive to verify a complex missile system by test alone. Verification of missile performance must be accomplished by simulation. Test firings are simulated on a computer and performance is measured. Simulated tests can be repeated over and over at little cost, comparatively, to evaluate performance over the full set of conditions and combinations of conditions. Monte Carlo techniques are used to determine performance statistically.

To verify by simulation that the missile system meets the specification requires a valid simulation, that is, one that truly represents the actual hardware performance. Verification of the simulation is of utmost importance to both the system contractor and the customer since it is the tool by which compliance with the specification is determined. In the case of HELLFIRE, system simulation was performed by both the customer and the contractor. Close cooperation was maintained throughout the design, development and test programs. Results were continuously compared and cross-checked to verify the simulations. The entire verification process consisted of:

- Characterization tests of each system element to validate component models.
- Real time simulation with hardware-in-the-loop. The laser seeker, autopilot, actuators, and gyros were integrated into the simulation individually and in combination for comparison with simulation math models.
- Captive flight tests where seeker/designator performance was investigated and characterized in the field under a variety of atmospheric and battlefield conditions.

- And finally, full system test firings were made in the development, integration and operational test programs. A total of 192 full system test firings were made with a success ratio of 171/192. Test results, such as telemetry recording, cinetheodolite and radar tracking, along with prelaunch characterization test data was analyzed and folded into the simulation to verify that each specific launch was adequately described by the simulation.

The HELLFIRE simulation was developed and verified by a multitude of tests and independent analyses over a period of more than 6 years. It has been demonstrated to be valid. It is a powerful tool for evaluating system performance, sensitivities, errors, modifications, new control laws and concepts.

This paper discusses development and verification of the HELLFIRE simulation.

SIMULATION OVERVIEW

The hybrid simulation and functional mock-up facilities are delineated in Figure 1. The simulation utilizes a number of general and special purpose digital computers, and analog computers to completely simulate missile system operation. The simulation ties into the functional mock-up (FMU) laboratory which includes an advanced laser target simulator (LTS) to generate laser target returns, a three axis table for attitude positioning of the seeker and gyros, a hydraulic load stand for dynamic aero loading of the actuators, and a missile control station which provides the appropriate interface to seeker, autopilot, gyro and actuator hardware. The functional mock-up permits substitution of any one, or combination, of the above missile hardware elements into the simulation; this enables direct comparison of math models with the hardware in a dynamic environment.

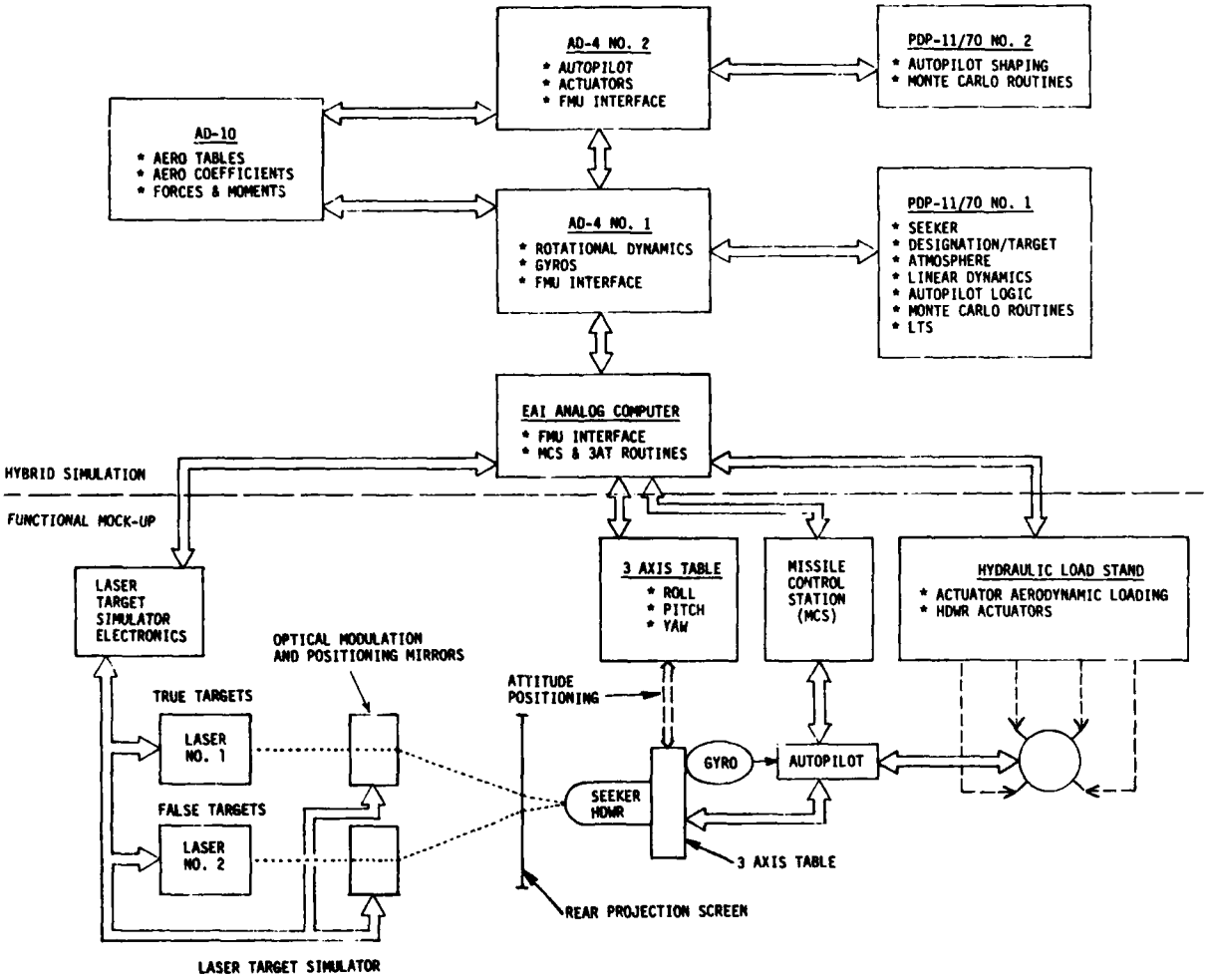

Figure 1 Hellfire Hybrid/FMU Simulation

The requirements placed upon the computing facility to support the HELLFIRE program are listed below in order of importance:

(1) Provide real time solution.

(2) Interface with the functional mock-up.

(3) Sufficient capacity to accommodate the simulation task, Monte Carlo statistical processing and data storage requirements.

(4) Economical to operate since innumerable runs would be required in the design, development and test program.

(5) Minimum Capital expenditure.

The hybrid computing equipment purchased to support the HELLFIRE program consists of:

(1) Two PDP 11/70 digital computers built by Digital Data Equipment Corporation each having 256 K bytes core memory capacity with 88 M byte disk storage, and a compliment of CRT and typewriter terminals, magnetic tape unit, line printer, and utility disk pack units. A PDP 11/70 computer controls the total simulation, integrates translational accelerations to obtain velocity and position in space, solves the kinematics of relative missile/target positions, models the laser seeker, provides bookkeeping for multi-run Monte Carlo sets, and records statistical analysis data. Off-line, the digital computers assembles the AD-10 program, determines coefficient values and sets all coefficients on the analog computer.

(2) Two AD-4 analog computers built by Applied Dynamic International each having 192 Multiplying Digital Coefficients units (digital pots), 188 amplifiers, 36 multipliers, 90 nonlinear modules, 64 A/D channels, and associated digital interface equipment. The analog computers solve the rotational equations of motion including gyro equations and simulate the autopilot and the actuator control section. The analog computer also provides the interface to all of the hardware elements for "hardware in the loop" simulation.

(3) One AD-10 special purpose high speed multi-processor digital computer built by Applied Dynamics International with analog input and output capability. This computer calculates all the multi-variant aerodynamic coefficient functions of one or more variables and algebraically combines these functions to form the aerodynamic forces and moments.

AERODYNAMIC MODEL

The HELLFIRE missile consists of a cylindrical boattailed body with low aspect ratio aft-mounted cruciform wings having trailing edge control surfaces, and forward-mounted in-line strakes. A six degree-of-freedom rigid body model is utilized in which aerodynamic data is described in a missile body prime axis system. The body prime axes system (an orthogonal system) is a body axes system rotated about the X axis such that the Z' axes lies in a plane defined by the X axis and the free stream velocity vector. Similar modeling has been used by Rockwell on other missile systems with good success in both simulation and flight data correlation. Aerodynamic coefficient data was derived from full scale wind tunnel tests. Coefficient data as functions of one, two and three variables are stored in tabular form in the AD-10 digital computer. The aerodynamic coefficient equations, presented in Figure 2, include 15 error terms to describe the uncertainty associated with the aero model. Some of the errors are associated with the precision by which the aero data is known, others are associated with manufacturing variations from unit to unit.

Interpolation routines are used to provide instantaneous aerodynamic coefficients as functions of angle-of-attack, side-slip, mach number and control surface deflections. Thirty-three tables having 4391 entries are used to store the coefficient data. Frame time of the AD-10 computer is 94 usec. The aero program and coefficient data is loaded into the AD-10 from the PDP-11/70 via a digital data bus before the simulation begins. During the simulation run all data, both input and output, is transmitted between the AD-10 and AD-4 computers via A/D and D/A converters.

The aerodynamic model was verified by wind tunnel test, by programmed missile flight test and by terminal homing flight tests. An example of model verification data is shown in Figure 3 which compares model coefficient data with wind tunnel data for two coefficients. It can be seen that the model matches the empirical data very well over the entire range of angle-of-attack and roll angle values. Similar precision is maintained with model descriptions of the other coefficients. Due to symmetry of the cruciform configuration specific coefficients can be modeled as a summation of α' and ϕ' terms where ϕ' is the roll angle between body and body prime axis systems. Theoretically, the rolling moment coefficient can be broken apart in a similar manner, however, it was found during missile flight test, that this type of a model did not adequately describe the test results. Early in the development program, four programmed missile flight tests were conducted to verify aerodynamic characteristics in free flight. In these tests, specific maneuvers were performed (by

a program stored in the autopilot) to verify specific aerodynamic characteristics. Data was collected by onboard sensor/telemetry package and by range tracking cinetheodolite. Missile roll response was found to be inadequately described by the induced roll and control effectiveness models currently used. As a result, the control effectiveness model was modified; and the induced roll coefficient model was replaced with a complete data table and look-up routine. With these changes, good correlation between model and test results were obtained for the programmed maneuvers. Aerodynamic response was carefully analyzed for all 192 missile test firings to verify the models. Aero terms which are particularly sensitive to manufacturing variations were systematically evaluated on each test firing.

BODY PRIME AXIS

$$C_{Y'} = \Delta C_{Y_4} \sin 4\phi' + \Delta C_{Y_1} \sin \phi' + C_{Y_{\delta r}}(\delta_q \sin \phi' + \delta_r \cos \phi')$$

$$C_{Z'} = (1 + F_{C_{Z\alpha'}}) C_{Z\alpha'} + \Delta C_{Z_2} \sin^2 2\phi' + \Delta C_{Z_1} \sin^2 \phi' + C_{Z_{\delta q}}(\delta_q \cos \phi' - \delta_r \sin \phi')$$

$$C_{m'} = (1 + F_{C_{m\alpha'}}) C_{m\alpha'} + \Delta C_{m_2} \sin^2 2\phi' + \Delta C_{m_1} \sin^2 \phi' + C_{m_{\delta q}}(\delta_q \cos \phi' - \delta_r \sin \phi')$$

$$C_{n'} = \Delta C_{n_4} \cos 4\phi' + \Delta C_{n_1} \sin \phi' + C_{n_{\delta r}}(\delta_q \sin \phi' + \delta_r \cos \phi')$$

BODY AXIS

$$C_X = \{C_{X_0} + C_{X\alpha'} + C_{A\delta} * |\delta|\}(1 + F_{C_X}) + C_{AP}$$

$$C_Y = \{C_{Y'} \cos \phi' - C_{Z'} \sin \phi'\}(1 + F_{C_Y})$$

$$C_Z = \{-C_{Y'} \sin \phi' - C_{Z'} \cos \phi'\} - C_{Z_0} + F_{C_{Z_0}}$$

$$C_l = (1 + F_{C_L}) C_{l_i} + F_{C_{l_0}} + C_{l_{\delta p}} \delta_p + (1 + F_{C_{l_p}}) \frac{l}{2V_m} C_{l_p} p$$

$$C_m = C_{n'} \sin \phi' + C_{m'} \cos \phi' + (C_{m_0} + F_{C_{m_0}}) + F_{C_{m_{0x}}}(\Delta C_{m_0}) + \frac{l}{2V_m}\{(1 + F_{C_{m_q}}) C_{m_q} q + (1 + F_{C_{m_{\dot\alpha}}}) C_{m_{\dot\alpha}} \dot\alpha\}$$

$$C_n = \{C_{n'} \cos \phi' - C_{m'} \sin \phi'\}(1 + F_{C_n}) + F_{C_{n_0}} + F_{C_{n_{0x}}}(C_{n_0}) + \frac{l}{2V_m}\{(1 + F_{C_{m_q}}) C_{m_q} r - (1 + F_{C_{m_{\dot\alpha}}}) C_{m_{\dot\alpha}} \dot\beta\}$$

$$C_{h_i} = f(M_N, \alpha', \delta_i)$$

Figure 2 Aerodynamic Coefficients

EQUATIONS OF MOTION

Solution of the translational and rotational equations of motion represent one of the most important parts of the simulation. Computer requirements such as speed and accuracy are very dependent on the choice of axis system for the translational equations of motion. It is well known that a flight path axis system makes much smaller speed and accuracy demands on the computer than does a body axis system. The hybrid simulation, being required to operate in real time, utilizes a flight path axis system for these reasons. The digital (DIMODS) simulation, on the other hand, utilizes a body axis system.

The aerodynamic forces and moments are computed identically in both simulations as well as the rotational equations in Figure 4. The rotational equations are simplified considerably due to missile symmetry in both the X-Z and X-Y planes. The digital simulation solves an additional nine direction cosine differential equations to determine orientation in space. The digital simulation solves the translational equations by transforming body accelerations to earth axis and integrating to compute velocity and position. The hybrid simulation solves the set of flight path equations presented in Figure 4. Flight path forces (F_V) are computed on the AD-10 computer. Angle-of-attack (γ) and side-slip (β_V) equations are mechanized on the AD-4 analog computer because of speed requirements; all remaining equations are solved on the PDP-11/70 computer. Missile acceleration and velocity are computed in the flight path axis system. Velocity is transformed to earth axis and integrated to compute position in space.

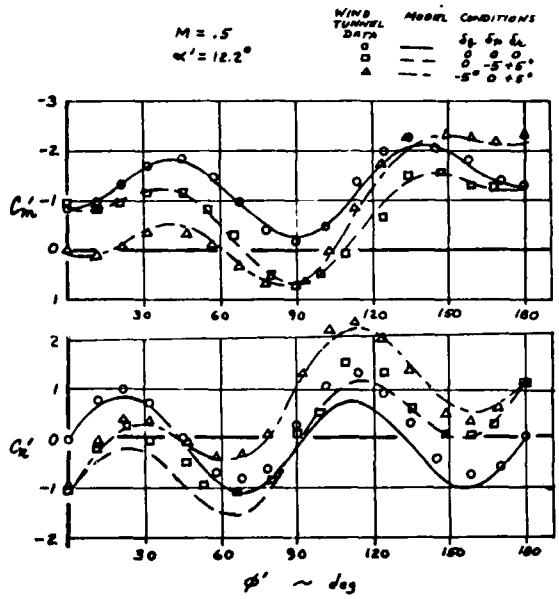

Figure 3
Aero Coefficient Model Verification Data

TRANSLATION EQUATIONS (BODY AXIS)

$$X = \tfrac{1}{2}\rho V_m^2 S C_x + T_x$$
$$Y = \tfrac{1}{2}\rho V_m^2 S C_y + T_y \qquad (3)$$
$$Z = \tfrac{1}{2}\rho V_m^2 S C_z + T_z$$

$$\begin{pmatrix}\ddot{X}\\ \ddot{Y}\\ \ddot{Z}\end{pmatrix} = \bar{B}\begin{pmatrix}X\\ Y\\ Z\end{pmatrix}\frac{1}{m} + \begin{pmatrix}0\\ 0\\ G\end{pmatrix} \qquad (4)$$

where B is the body to earth transformation matrix.

ROTATIONAL EQUATIONS (BODY AXIS)

$$L = \tfrac{1}{2}\rho V_m^2 S l C_l + T_{Mx} + \{Y z_{ca} - Z y_{ca}\}$$
$$M = \tfrac{1}{2}\rho V_m^2 S l C_m + T_{My} + \{Z x_{ca} - X z_{ca}\} \qquad (5)$$
$$N = \tfrac{1}{2}\rho V_m^2 S l C_n + T_{Mz} - \{Y x_{ca} - X y_{ca}\}$$
$$H_i = \tfrac{1}{2}\rho V_m^2 S l C_{hi}$$

$$\dot{p} = \frac{1}{I_{xx}}\{L\}$$
$$\dot{q} = \frac{1}{I_{yy}}\{M + (I_{zz} - I_{xx}) p r\} \qquad (6)$$
$$\dot{r} = \frac{1}{I_{zz}}\{N + (I_{xx} - I_{yy}) p q\}$$

TRANSLATION EQUATIONS (FLIGHT PATH AXIS)

$$\bar{F}_V = \bar{A}\,\bar{F}_B$$

where A is the body to flight path transformation matrix

$$\dot{V}_m = \left(\frac{F_{Vx}}{m} + G_{Vx}\right)$$
$$q_V = -\frac{1}{V_m}\left(\frac{F_{Vz}}{m} + G_{Vz}\right)$$
$$r_V = \frac{1}{V_m}\left(\frac{F_{Vy}}{m} + G_{Vy}\right) \qquad (7)$$
$$p_V = a_{11} p + a_{12}(q - \dot{\alpha}) + a_{13} r$$
$$\dot{\alpha}_V = \frac{1}{a_{22}}(a_{21} p + a_{22} q + a_{23} r - q_V)$$
$$\dot{\beta}_V = -a_{31} p - a_{33} r + r_V$$

$$\dot{\phi}_V = p_V + \dot{\psi}_V \sin\psi_V$$
$$\dot{\theta}_V = q_V \cos\phi_V - r_V \sin\phi_V \qquad (8)$$
$$\dot{\psi}_V = (q_V \sin\phi_V + r_V \cos\phi_V)\frac{1}{\cos\theta_V}$$

$$\begin{pmatrix}\dot{X}\\ \dot{Y}\\ \dot{Z}\end{pmatrix} = \bar{B}\,\bar{A}^{-1}\begin{pmatrix}V_m\\ 0\\ 0\end{pmatrix} \qquad (9)$$

Figure 4
Equations of Motion

The hybrid and digital simulations were extensively compared to validate the aerodynamic models. Both static and dynamic comparisons were made for conditions over the entire flight regime. For example, both free airframe and closed loop (autopilot) transient response were compared and matched for various Mach numbers and perturbation step sizes (see Figure 5). Unguided closed loop trajectories were also compared and matched. This process, in essence, verified that both simulations were mechanized in accordance with the models since they were independently programmed on different computers.

ROCKET MOTOR

The rocket motor provides the impetus to drive the missile from the launch point to the target. The pertinent characteristics modeled are; the thrust profile (force vs. time), the effect of ambient temperature on the thrust profile, total impulse, propellent consumption along with the corresponding change in missile mass, and inertia, and thrust alignment. Figure 6 presents nominal thrust profiles for high, low and room temperature conditions.

These curves are the statistical mean profiles derived from 31 test firings conducted in the development and qualification test programs. Profile data are stored in tabular form in the digital program for high, low, and nominal temperatures. Profiles for other temperatures are linearly interpolated from the table. Error terms are incorporated in the model to account for variations in impulse, thrust level, burn time, and thrust alignment. Statistics for the error terms were determined from static test firings and verified on over 80 missile launches in which longitudinal acceleration was measured and recorded.

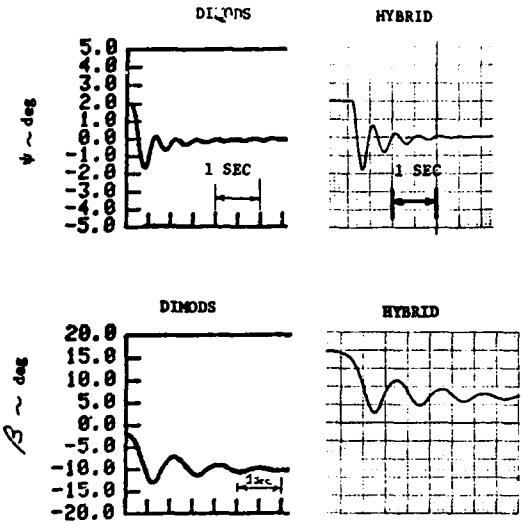

Figure 5
Closed Loop Transient Response

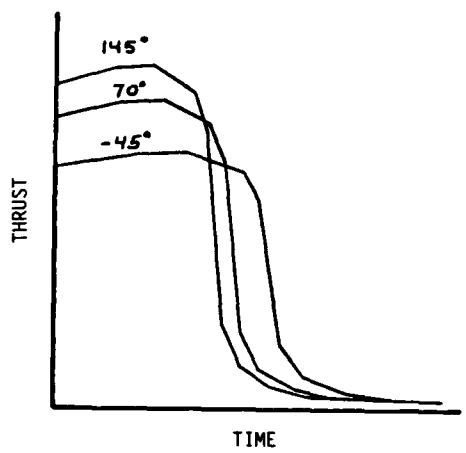

Figure 6
Rocket Motor Thrust Profile

ACTUATORS

The missile employs four pneumatic actuators to position trailing edge control flaps in a cruciform wing configuration. The actuators consist of an "open center" solenoid valve and an unbalanced actuator. Pseudo linear operation is accomplished by a pulse width modulation technique. Power is supplied by a high pressure storage bottle and regulator. A complete theoretical model is fairly complex and quite nonlinear. A simplified model which embodies the essential characteristics for the system simulation is utilized to reduce computational requirements. The model was derived from closed loop frequency response data taken from laboratory measurements. The simplified model is shown in Figure 7. Nonlinear parameters to describe rate limit, stall torque, frictional deadband and fin hysterisis (slop) are included along with parameters to simulate loop gain, valve dynamics, torque sensitivity, and feedback compensation.

The actuator model was verified by laboratory testing of complete control sections (4 actuators) over the full operating range of conditions of temperature, supply pressure, fin loading, loop gain, and signal amplitude. A comparison of model response and hardware response for one load condition is shown in Figure 8.

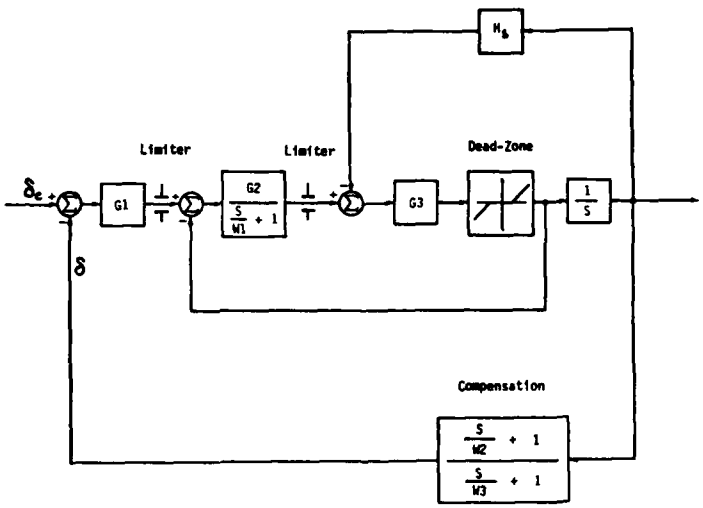

Figure 7

Actuator Model

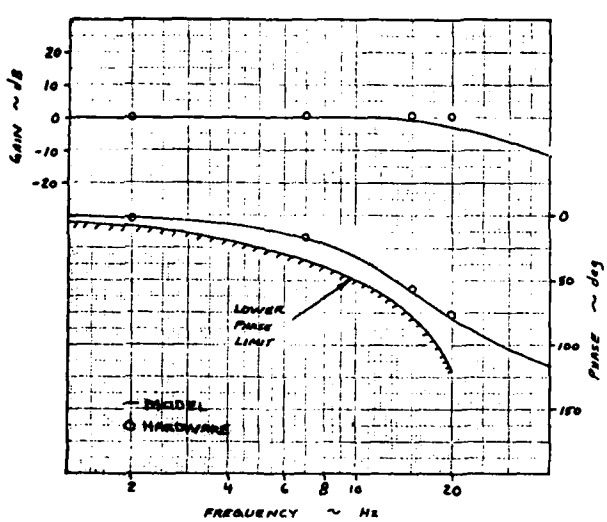

Figure 8

Actuator Model & Hardware Response

AUTOPILOT

The HELLFIRE analog autopilot is shown in Figure 9. The design utilizes linear operational amplifiers and TTL logic gates. Compensation and filter networks are easily verifiable by laboratory frequency response test. Figure 10 shows typical response data for the theoretical transfer function, the hybrid simulation, and a hardware autopilot. Logic functions and system timing are also easily verifiable by laboratory test. Modeling includes 17 error terms to describe gain, offset and timing variations. Statistical description of the error terms was determined from production acceptance test performed on each unit.

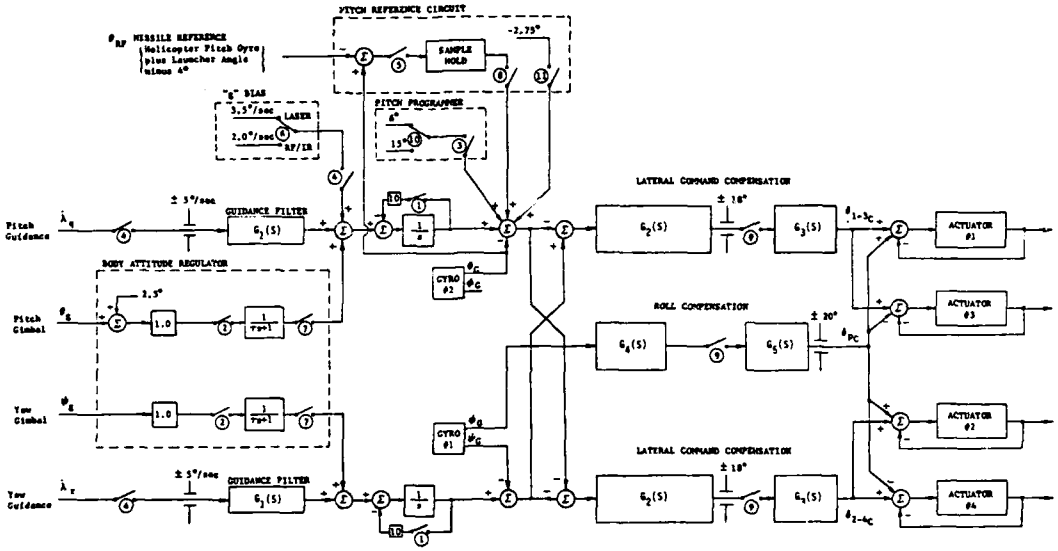

Figure 9

Autopilot Block Diagram

GYROS

The HELLFIRE missile utilizes two 2-gimbal gyros for roll, pitch and yaw information as depicted in Figure 9. The gyros are spun up by compressed gas and coast during the missile flight. Dynamics of the gyros are quite high relative to the missile pass band. The gyro model used consists of a set of Euler equations which relate body rates to gimbal rates and error terms. Error terms are introduced to simulate random drift rates, 'G' sensitive drift rates, gyro noise, and uncaging errors. Model equations are listed in Figure 11.

Gyro noise is simulated by feeding white noise through a power spectral density (PSD) filter having the following transfer functon:

$$G(S) = \frac{KS}{\left(\frac{S}{4.55} + 1\right)\left(\frac{S}{30.3} + 1\right)}$$

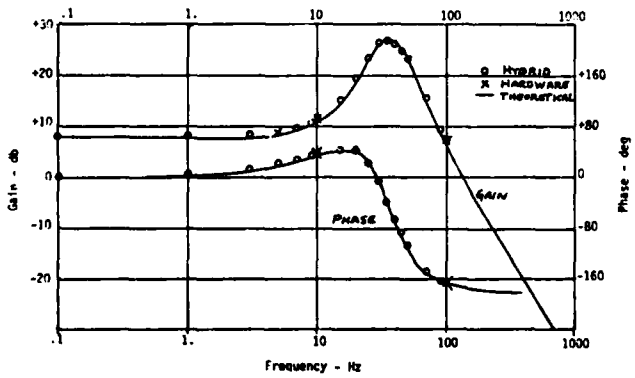

Figure 10

Lateral Compensation Frequency Response

Gyro No. 1

$$\dot{\phi}_1 = p - (q \cos\theta_1 - r \sin\phi_1)\tan\psi_1 + \dot{\phi}_{10} + \dot{\phi}_{14}\, a$$

$$\dot{\psi}_1 = r \cos\phi_1 + q \sin\phi_1 + \dot{\psi}_{10} + \dot{\psi}_{14}\, a$$

Gyro No. 2

$$\dot{\phi}_2 = p \cos\theta_2 + r \sin\theta_2 + \dot{\phi}_{20} + \dot{\phi}_{24}\, a$$

$$\dot{\theta}_2 = q - (r \cos\theta_2 - p \sin\theta_2)\tan\theta_2 + \dot{\theta}_{20} + \dot{\theta}_{24}\, a$$

Figure 11
Gyro Model Equations

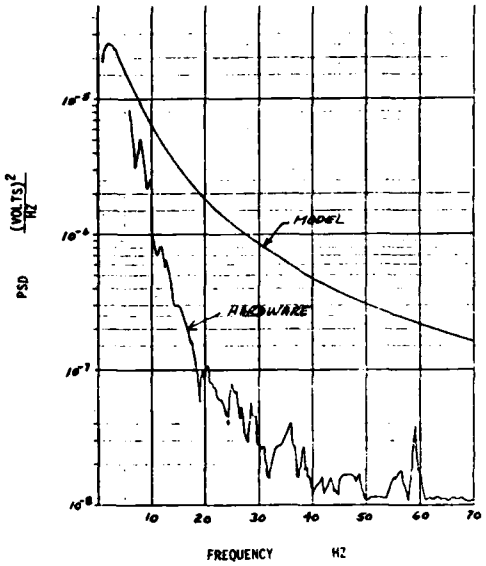

Figure 12
Gyro Noise

Figure 12 compares model PSD with hardware measurements. It can be seen that the model, based on procurement specifications, is conservative.

Verification of the gyro model consisted primarily of verifying that; one the dynamics are sufficiently higher than the missile passband, and therefore, have negligible effect, and two, the error terms adequately describe anomalies in performance. Hardware-in-the-loop test were conducted with gyros mounted on the three axis table; missile transient response with hardware gyros was compared with model gyros and found to be virtually indistinguishable. Error model was based upon Scorsby tests performed on sample lots of gyros under various 'g' environments.

SEEKER

A block diagram of the seeker model is shown in Figure 13. The seeker model is organized into two major blocks; signal processor and platform. The signal processor senses the return laser energy, determines pointing error and generates platform rate commmands which are used to steer the missile as well as precess the platform. The platform describes the seeker head motion and contains the associated precession torquers and the spin control loop. Appropriate error terms are incorporated in the model to describe the major anomalies in performance such as; platform mass imbalance, boresight shift with intensity, pitch and yaw channel cross coupling, coning error, guidance noise, open loop gain and scale factor variations, static track rate errors, and seeker threshold.

The open loop transfer function of the signal processor model is shown in Figure 14 along with empirical data for one particular hardware seeker. The model transfer function matches the hardware fairly well especially in the null region where tracking is accomplished (line-of-sight error is about zero during tracking). Variation of the open loop gain (slope of the transfer function through null) from unit to unit is accounted for in the Monte Carlo process.

Platform dynamics of the model is compared with seeker test data in Figure 15 for the track mode. Phase shift of model and hardware match very well; gain of the seeker hardware is somewhat greater than the model at higher frequencies.

The seeker is not only crucial to missile system performance but also the most complex element. A major portion of the overall program was expended on design, development and testing of the seeker. Rockwell International as missile system manager, designed and developed an entire Laser Target Simulator (LTS) facility to evaluate and characterize the government furnished seeker. The LTS, depicted in Figure 1 consists of dual lasers, servoed wedge attenuators (low frequency), optical modulator attenuator (high frequeny), two axis servoed mirror, back projection screen, and associated electronics, power supplies, etc. The LTS also enables seeker hardware-in-the-loop simulation for direct comparison of math models with hardware.

Verification of the seeker model was accomplished by: laboratory test, conducted by the U.S. Army Missile Command, the seeker manufacturer, and Rockwell International; field tests conducted at the Redstore Arsenal; and the missile launch test program. This effort extended over a period of years.

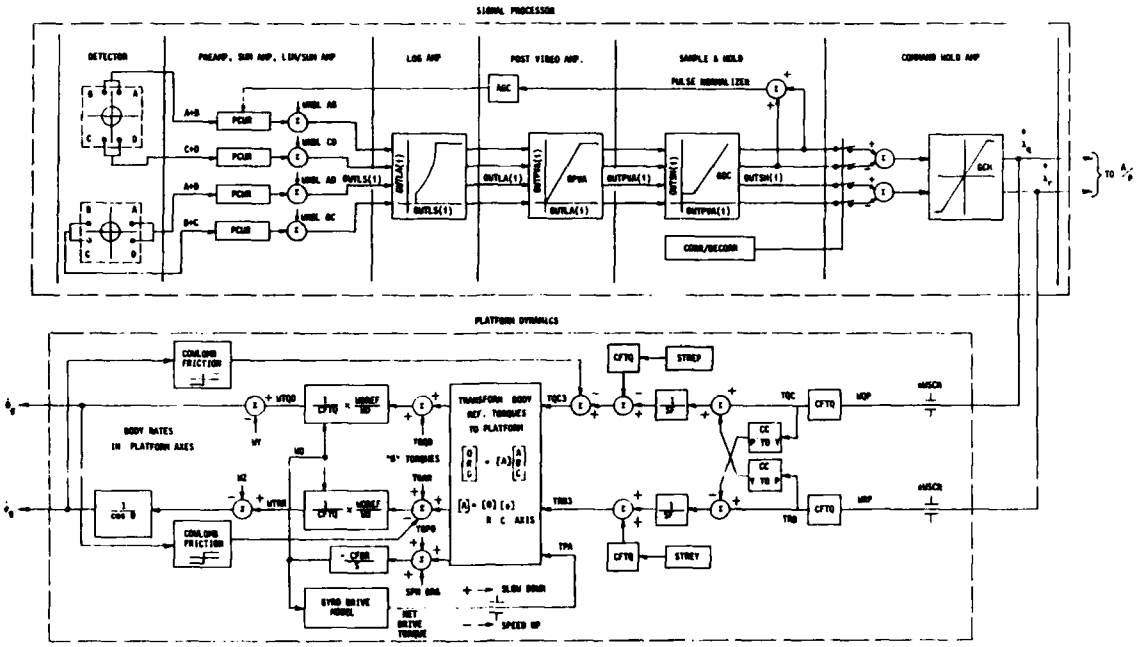

Figure 13
Seeker Block Diagram

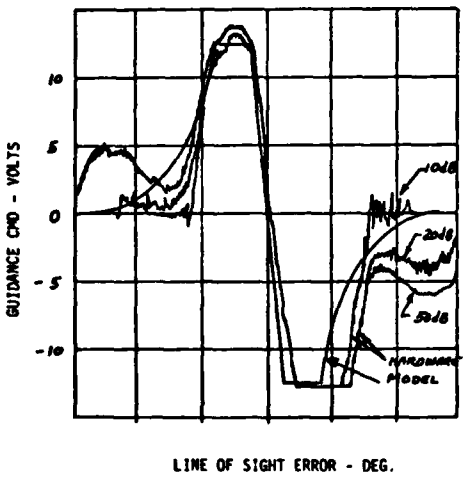

Figure 14
Open Loop Transfer Function

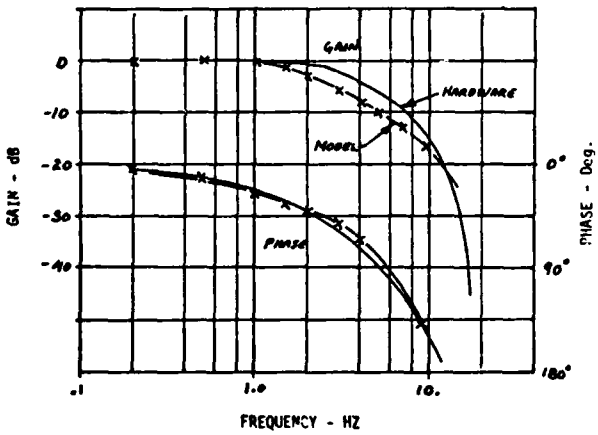

Figure 15
Platform Response

TARGET-DESIGNATION

Figure 16 depicts the geometrical relationship for a "lock-on before launch' scenario with remote designation. The earth axis system (X_E, Y_E, Z_E) is a right handed cartesian coordinate system with the origin at the initial target position and the X_E axis along the helicopter-target line. A simplified elliptical target model, shown in Figure 16, situated perpendicular to the designator line-of-sight, is utilized to generate a true target and two false target returns (foreground and background). The false targets are located along the designator line-of-sight to the target. The ellipse size (major and minor axis) is selected to approximate either the front view or the side view of a tank; the side view is depicted in Figure 17. The model includes moving target capability for various scenarios (i.e., stationary, constant velocity, accelerating/decelerating, and maneuvering). Signal returns are generated for the signal processor which take into account the positions, timing due to path length, reflectivity, atmospheric attenuation, scintillation, spot jitter, laser beam characteristics, false target range, designator energy, reflection angle, and designator bias for each of the three target returns. This information is supplied to the seeker signal processor which determines which signal will be tracked, on a pulse to pulse basis, and generates appropriate guidance commands. Ten error terms are modeled; seven stationary, and three time varying types.

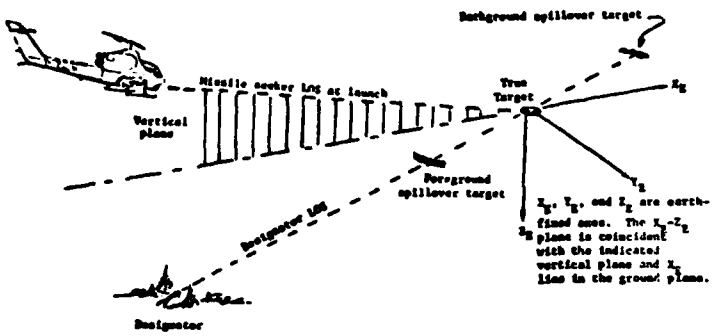

Figure 16
Target-Designator Geometry

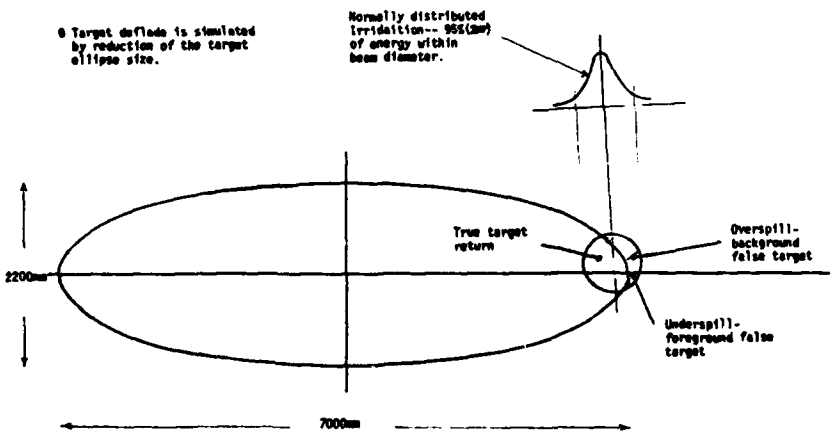

Figure 17
Target Ellipse Model

REPORT DOCUMENTATION PAGE

1. Recipient's Reference	2. Originator's Reference	3. Further Reference	4. Security Classification of Document
	AGARD-AG-273	ISBN 92-835-0472-0	UNCLASSIFIED

5. Originator Advisory Group for Aerospace Research and Development
North Atlantic Treaty Organization
7 rue Ancelle, 92200 Neuilly sur Seine, France

6. Title GUIDANCE AND CONTROL SYSTEMS SIMULATION AND VALIDATION TECHNIQUES

7. Presented at

8. Author(s)/Editor(s)	9. Date
Editor: Dr William P.Albritton, Jr	July 1988

10. Author's/Editor's Address	11. Pages
See flyleaf.	136

12. Distribution Statement This document is distributed in accordance with AGARD policies and regulations, which are outlined on the Outside Back Covers of all AGARD publications.

13. Keywords/Descriptors

Control simulation,
Digital simulation,
Missile control,
Missile guidance,
Proving,
Radar target position simulators,
Test facilities,
Guidance computers, (SDW/JFS).
France.

14. Abstract

This AGARDograph addresses simulation and validation techniques for guidance and control systems of tactical guided weapons. Many developments in simulation philosophy, techniques, and facilities have taken place over the last few years. In particular, physical simulation using hybrid, hardware-in-the-loop techniques has assumed much more importance. The chapter on Digital Simulation Techniques provides descriptions of digital simulation techniques for application to some of the more difficult aspects of tactical guided weapon guidance and control systems. Concerning Hardware-in-the-loop (HITL) Simulation Techniques the volume provides descriptions of facility design techniques for performing HITL simulation and particular information on radar target simulation techniques. The volume concludes with System Simulation and Validation Experience presenting "lessons learned" type information from some major programs. This section shows the application of above techniques to guided weapon developments. Keywords:

This AGARDograph has been prepared at the request of the Guidance and Control Panel of AGARD.

CONCLUSIONS

The HELLFIRE developement program has been a most successful missile program. The missile has been proven to be highly accurate, lethal, operationally effective, and ready for deployment. One hundred ninety-two test firings were made with a success ratio of 89%; excellent for a new missile in the development phase. The extensive simulation effort conducted during the conceptual, proto-type development and production design phases played a major role in this success. An estimated 2.1 million simulted missile launches were conducted to evaluate and optimize missile system design under the myriad of conditions in which it must operate. Of course, for the simulation to fulfill its role it had to be accurate, valid and cost effective. Careful attention was given to modeling of each element of the system throughout the entire 10 year development cycle to verify and validate the entire simulation. Test data was compared to simulation data on a continuing basis and when necessary, math models were revised. The HELLFIRE simulation is a powerful and proven valid analytical tool for determining missile performance, for evaluating system designs and changes, and for evaluation of operational concepts.

The computer simulation equipment procured for this effort has been found to be quite adequate for the task and cost effective. Since the computing equipment is owned by the Missile Systems Division of Rockwell, and therefore, no leasing expenses incurred, considerable freedom and flexibility in performing engineering tasks was afforded; the only constraint was calendar time. The facility was used one hundred percent of the time during peak effort to support specific studies; that is, 24 hours a day, 7 days a week.

Plans for the hybrid facility during the current year include procurement of another AD-10 computer having a numerical integration processor and modification of the existing AD-10 to incorporate the processor. These additions permit digital simulation of many of the "high" dynamic equations currently solved on the AD-4 analog computers. The increased capability enables the entire HELLFIRE simulation to be accomplished on one each AD-10, AD-4 and PDP-11/70 computers; the other set of computers will be dedicated to the GBU-15 "smart bomb" program. Change over and reprogramming is nearly complete.

The facilities will be used to define missille performance for different seekers and future generation missile configurations. Potential for missile launch from a number of helicopters and fixed wing airraft is currently being evaluted. A similar effort is underway to evaluate the extended range ground launch potential and to develop suitable trajectory control algorithms. The hybrid simulation will also be used to evaluate the performance capabilities of a miroprocessor based digital autopilot for eventual replacement of the analog autopilot currently in production. Future generation seekers will be evaluated in the FMU facility to develop accurate performance models for incorporation in the digital simulation. The first stage of construction is complete on an infrared target generator to use with the three axis flight table required for evaluation of imaging infrared fire and forge seekers.

NATO [illegible]

[illegible] 92200 NEUILLY-SUR-SEINE
FRANCE

Telephone (1)47.38.57.00 Telex 610 176

DISTRIBUTION OF UNCLASSIFIED AGARD PUBLICATIONS

AGARD does NOT hold stocks of AGARD publications at the above address for general distribution. Initial distribution of AGARD publications is made to AGARD Member Nations through the following National Distribution Centres. Further copies are sometimes available from these Centres, but if not may be purchased in Microfiche or Photocopy form from the Purchase Agencies listed below.

NATIONAL DISTRIBUTION CENTRES

BELGIUM
Coordonnateur AGARD — VSL
Etat-Major de la Force Aérienne
Quartier Reine Elisabeth
Rue d'Evere, 1140 Bruxelles

CANADA
Director Scientific Information Services
Dept of National Defence
Ottawa, Ontario K1A 0K2

DENMARK
Danish Defence Research Board
Ved Idraetsparken 4
2100 Copenhagen Ø

FRANCE
O.N.E.R.A. (Direction)
29 Avenue de la Division Leclerc
92320 Châtillon

GERMANY
Fachinformationszentrum Energie,
Physik, Mathematik GmbH
Karlsruhe
D-7514 Eggenstein-Leopoldshafen 2

GREECE
Hellenic Air Force General Staff
Aircraft Support Equipment Directorate
Department of Research and Development
Holargos, Athens, TGA 1010

ICELAND
Director of Aviation
c/o Flugrad
Reyjavik

ITALY
Aeronautica Militare
Ufficio del Delegato Nazionale all'AGARD
3 Piazzale Adenauer
00144 Roma/EUR

LUXEMBOURG
See Belgium

NETHERLANDS
Netherlands Delegation to AGARD
National Aerospace Laboratory, NLR
P.O. Box 126
2600 AC Delft

NORWAY
Norwegian Defence Research Establishment
Attn: Biblioteket
P.O. Box 25
N-2007 Kjeller

PORTUGAL
Portuguese National Coordinator to AGARD
Gabinete de Estudos e Programas
CLAFA
Base de Alfragide
Alfragide
2700 Amadora

SPAIN
INTA (AGARD Publications)
Pintor Rosales 34
28008 Madrid

TURKEY
Milli Savunma Bakanlığı (MSB)
ARGE Daire Başkanlığı (ARGE)
Ankara

UNITED KINGDOM
Defence Research Information Centre
Kentigern House
65 Brown Street
Glasgow G2 8EX

UNITED STATES
National Aeronautics and Space Administration (NASA)
Langley Research Center
M/S 180
Hampton, Virginia 23665

THE UNITED STATES NATIONAL DISTRIBUTION CENTRE (NASA) DOES NOT HOLD STOCKS OF AGARD PUBLICATIONS, AND APPLICATIONS FOR COPIES SHOULD BE MADE DIRECT TO THE NATIONAL TECHNICAL INFORMATION SERVICE (NTIS) AT THE ADDRESS BELOW.

PURCHASE AGENCIES

National Technical
Information Service (NTIS)
5285 Port Royal Road
Springfield
Virginia 22161, USA

ESA/Information Retrieval Service
European Space Agency
10, rue Mario Nikis
75015 Paris, France

The British Library
Document Supply Division
Boston Spa, Wetherby
West Yorkshire LS23 7BQ
England

Requests for microfiche or photocopies of AGARD documents should include the AGARD serial number, title, author or editor, and publication date. Requests to NTIS should include the NASA accession report number. Full bibliographical references and abstracts of AGARD publications are given in the following journals:

Scientific and Technical Aerospace Reports (STAR)
published by NASA Scientific and Technical
Information Branch
NASA Headquarters (NIT-40)
Washington D.C. 20546, USA

Government Reports Announcements (GRA)
published by the National Technical
Information Services, Springfield
Virginia 22161, USA

Printed by Specialised Printing Services Limited
40 Chigwell Lane, Loughton, Essex IG10 3TZ

ISBN 92-835-0472-0

AGARDograph No.273
Advisory Group for Aerospace Research and Development, NATO
GUIDANCE AND CONTROL SYSTEMS SIMULATION AND VALIDATION TECHNIQUES
Edited by W.P.Albritton, Jr
Published July 1988
136 pages

This AGARDograph addresses simulation and validation techniques for guidance and control systems of tactical guided weapons. Many developments in simulation philosophy, techniques, and facilities have taken place over the last few years. In particular, physical simulation using hybrid, hardware-in-the-loop techniques has assumed much more importance. The chapter on Digital

P.T.O.

AGARD-AG-273

Control simulation
Digital simulation
Missile control
Missile guidance
Proving
Radar target position simulators
Test facilities

AGARDograph No.273
Advisory Group for Aerospace Research and Development, NATO
GUIDANCE AND CONTROL SYSTEMS SIMULATION AND VALIDATION TECHNIQUES
Edited by W.P.Albritton, Jr
Published July 1988
136 pages

This AGARDograph addresses simulation and validation techniques for guidance and control systems of tactical guided weapons. Many developments in simulation philosophy, techniques, and facilities have taken place over the last few years. In particular, physical simulation using hybrid, hardware-in-the-loop techniques has assumed much more importance. The chapter on Digital

P.T.O.

AGARD-AG-273

Control simulation
Digital simulation
Missile control
Missile guidance
Proving
Radar target position simulators
Test facilities

AGARDograph No.273
Advisory Group for Aerospace Research and Development, NATO
GUIDANCE AND CONTROL SYSTEMS SIMULATION AND VALIDATION TECHNIQUES
Edited by W.P.Albritton, Jr
Published July 1988
136 pages

This AGARDograph addresses simulation and validation techniques for guidance and control systems of tactical guided weapons. Many developments in simulation philosophy, techniques, and facilities have taken place over the last few years. In particular, physical simulation using hybrid, hardware-in-the-loop techniques has assumed much more importance. The chapter on Digital

P.T.O.

AGARD-AG-273

Control simulation
Digital simulation
Missile control
Missile guidance
Proving
Radar target position simulators
Test facilities

AGARDograph No.273
Advisory Group for Aerospace Research and Development, NATO
GUIDANCE AND CONTROL SYSTEMS SIMULATION AND VALIDATION TECHNIQUES
Edited by W.P.Albritton, Jr
Published July 1988
136 pages

This AGARDograph addresses simulation and validation techniques for guidance and control systems of tactical guided weapons. Many developments in simulation philosophy, techniques, and facilities have taken place over the last few years. In particular, physical simulation using hybrid, hardware-in-the-loop techniques has assumed much more importance. The chapter on Digital

P.T.O.

AGARD-AG-273

Control simulation
Digital simulation
Missile control
Missile guidance
Proving
Radar target position simulators
Test facilities

Simulation Techniques provides descriptions of digital simulation techniques for application to some of the more difficult aspects of tactical guided weapon guidance and control systems. Concerning Hardware-in-the-loop (HITL) Simulation Techniques the volume provides descriptions of facility design techniques for performing HITL simulation and particular information on radar target simulation techniques. The volume concludes with System Simulation and Validation Experience presenting "lessons learned" type information from some major programs. This section shows the application of above techniques to guided weapon developments.

This AGARDograph has been prepared at the request of the Guidance and Control Panel of AGARD.

ISBN 92-835-0472-0

Simulation Techniques provides descriptions of digital simulation techniques for application to some of the more difficult aspects of tactical guided weapon guidance and control systems. Concerning Hardware-in-the-loop (HITL) Simulation Techniques the volume provides descriptions of facility design techniques for performing HITL simulation and particular information on radar target simulation techniques. The volume concludes with System Simulation and Validation Experience presenting "lessons learned" type information from some major programs. This section shows the application of above techniques to guided weapon developments.

This AGARDograph has been prepared at the request of the Guidance and Control Panel of AGARD.

ISBN 92-835-0472-0

Simulation Techniques provides descriptions of digital simulation techniques for application to some of the more difficult aspects of tactical guided weapon guidance and control systems. Concerning Hardware-in-the-loop (HITL) Simulation Techniques the volume provides descriptions of facility design techniques for performing HITL simulation and particular information on radar target simulation techniques. The volume concludes with System Simulation and Validation Experience presenting "lessons learned" type information from some major programs. This section shows the application of above techniques to guided weapon developments.

This AGARDograph has been prepared at the request of the Guidance and Control Panel of AGARD.

ISBN 92-835-0472-0

Simulation Techniques provides descriptions of digital simulation techniques for application to some of the more difficult aspects of tactical guided weapon guidance and control systems. Concerning Hardware-in-the-loop (HITL) Simulation Techniques the volume provides descriptions of facility design techniques for performing HITL simulation and particular information on radar target simulation techniques. The volume concludes with System Simulation and Validation Experience presenting "lessons learned" type information from some major programs. This section shows the application of above techniques to guided weapon developments.

This AGARDograph has been prepared at the request of the Guidance and Control Panel of AGARD.

ISBN 92-835-0472-0