DTIC FILE COPY

(4)

AD

TECHNICAL REPORT ARCCB-TR-88022

AD-A196 285

WIDE RANGE STRESS INTENSITY FACTOR EXPRESSION FOR AN EDGE-CRACKED ROUND BAR BEND SPECIMEN

J. H. UNDERWOOD

R. L. WOODWARD

DTIC
ELECTE
JUL 28 1988
S D
E

MAY 1988

US ARMY ARMAMENT RESEARCH,
DEVELOPMENT AND ENGINEERING CENTER
CLOSE COMBAT ARMAMENTS CENTER
BENÉT LABORATORIES
WATERVLIET, N.Y. 12189-4050

APPROVED FOR PUBLIC RELEASE; DISTRIBUTION UNLIMITED

88 7 27 027

SECURITY CLASSIFICATION OF THIS PAGE (When Data Entered)

REPORT DOCUMENTATION PAGE

READ INSTRUCTIONS BEFORE COMPLETING FORM

1. REPORT NUMBER
ARCCB-TR-88022

2. GOVT ACCESSION NO.

3. RECIPIENT'S CATALOG NUMBER

4. TITLE (and Subtitle)
WIDE RANGE STRESS INTENSITY FACTOR EXPRESSION FOR AN EDGE-CRACKED ROUND BAR BEND SPECIMEN

5. TYPE OF REPORT & PERIOD COVERED
Final

6. PERFORMING ORG. REPORT NUMBER

7. AUTHOR(s)
J. H. Underwood and R. L. Woodward (See Reverse)

8. CONTRACT OR GRANT NUMBER(s)

9. PERFORMING ORGANIZATION NAME AND ADDRESS
US Army ARDEC
Benet Laboratories, SMCAR-CCB-TL
Watervliet, NY 12189-4050

10. PROGRAM ELEMENT, PROJECT, TASK AREA & WORK UNIT NUMBERS
AMCMS No. 6111.02.H610.011
PRON No. 1A82Z8CANMSC

11. CONTROLLING OFFICE NAME AND ADDRESS
US Army ARDEC
Close Combat Armaments Center
Picatinny Arsenal, NJ 07806-5000

12. REPORT DATE
May 1988

13. NUMBER OF PAGES
12

14. MONITORING AGENCY NAME & ADDRESS(if different from Controlling Office)

15. SECURITY CLASS. (of this report)
UNCLASSIFIED

15a. DECLASSIFICATION/DOWNGRADING SCHEDULE

16. DISTRIBUTION STATEMENT (of this Report)
Approved for public release; distribution unlimited.

17. DISTRIBUTION STATEMENT (of the abstract entered in Block 20, if different from Report)

18. SUPPLEMENTARY NOTES
Presented to ASTM Committee E-24 on Fracture, Sparks, NV, 25-28 April 1988.
Submitted to Experimental Techniques.

19. KEY WORDS (Continue on reverse side if necessary and identify by block number)
Fracture Testing,
Limit Solution,
Bend Specimen
Cylindrical Geometry, CRACKS, J25

20. ABSTRACT (Continue on reverse side if necessary and identify by block number)
An edge-cracked round bar was analyzed for use as a fracture mechanics test specimen. Shallow and deep crack limit solutions were developed and combined with experimental and numerical results to obtain K expressions which apply for all crack depths. Specimen and loading geometries were suggested for standardized fracture mechanics tests using a round bar.

DD FORM 1 JAN 73 1473 EDITION OF 1 NOV 65 IS OBSOLETE

UNCLASSIFIED

SECURITY CLASSIFICATION OF THIS PAGE (When Data Entered)

7. AUTHORS (CONT'D)

R. L. Woodward
Materials Research Laboratories
Defense Science and Technology Organization
Melbourne, 3032, Australia

TABLE OF CONTENTS

	Page
ACKNOWLEDGEMENT	ii
INTRODUCTION	1
ANALYSIS AND RESULTS	2
DISCUSSION	5
CONCLUSION	6
REFERENCES	7

LIST OF ILLUSTRATIONS

1. Round bar bend specimen for fracture testing. 8
2. Stress intensity factor parameter for round bar bend specimen. 9
3. Shallow crack geometry for a round bar bend specimen. 10

Accession For
NTIS GRA&I ☒
DTIC TAB ☐
Unannounced ☐
Justification
By
Distribution/
Availability Codes
Dist | Avail and/or Special
A-1

QUALITY INSPECTED 2

ACKNOWLEDGEMENT

We are pleased to acknowledge the help of I. A. Burch with numerical analysis.

INTRODUCTION

A round bar is the available form of many materials, and if fracture tests are needed, it is more convenient to test in this form than the usual rectangularly shaped specimens (ref 1). It saves fabrication time. Two types of notches can be used easily with a round bar, a straight-fronted edge notch and an annular notch. While a straight-fronted notch has no fabrication advantage over an annular notch, it does allow much easier observation of the notch tip, a requirement in most fracture tests. The edge-notched round bar specimen is suited to L-R orientation (ref 1) fracture tests, that is, with the fracture plane normal to the longitudinal direction of the bar and crack growth in the radial direction. For transverse tests, disk or compact specimens (ref 1) or the recently developed chevron-notched specimens (ref 2) should be used.

Bush (ref 3) was the first to perform comprehensive analysis of the round bar bend specimen for fracture testing applications for use with power generation turbine rotors. The application which prompted the present work was fracture testing of sintered tungsten rod stock used for kinetic energy projectiles. The round bar specimen should prove useful for this material and others which are difficult to machine. A round bar with a notch added can be used for fracture tests with little or no additional machining. Bush's work is used here along with limit solutions and recent finite element analysis (ref 4) to propose test specimen geometries and associated stress intensity factor K expressions for use in fracture testing. The entire range of crack depth relative to bar diameter, a/D, is considered to accommodate different types of fracture tests.

References are listed at the end of this report.

ANALYSIS AND RESULTS

Figure 1 shows the basic elements of a round bar bend specimen for fracture testing and some associated nomenclature. It is the same basic geometry as that of Bush (ref 3) who obtained experimental compliance K results for a bar with S/D = 3.33 and one with S/D = 6.67. His results are shown in Figure 2 along with results from analysis and two expressions based on both experimental and analytical results. The dimensionless K parameter used in Figure 2, albeit complex, is based upon shallow and deep crack limit solutions as discussed in the following paragraphs.

The deep crack limit for a round bar is different from that for a rectangular bar. Combining the rectangular bar limit expression (ref 5) in terms of bar diameter

$$\lim_{a/D \to 1} (KBD^{3/2}/PS)(1-a/D)^{3/2} = 0.994 \tag{1}$$

with an expression for the chordal length of a circular segment to account for the changing B dimension as $a/D \to 1$

$$B = 2D(a/D)^{1/2}(1-a/D)^{1/2} \tag{2}$$

gives the deep crack limit for the round bar

$$\lim_{a/D \to 1} (KD^{5/2}/PS)(1-a/D)^{2} = 0.497 \tag{3}$$

The shallow crack limit for a round bar is also affected by changing crack dimensions, as $a/D \to 0$. The usual limit solution (ref 6) is rewritten in terms of a', an effective crack depth which accounts for the variations in actual depth across the width of a shallow crack which is in the shape of a circular segment as shown in Figure 3,

$$\lim_{a/D \to 0} K/\sigma\, D^{1/2}(\pi a'/D)^{1/2} = 1.122 \tag{4}$$

where $\sigma = 8\ PS/\pi D^3$, the relationship for the outer fiber stress, σ, for a round bar (ref 7). The ratio a'/a is determined from the moments of inertia of a circular segment, I_s, and a rectangle, I_r, with the same overall dimensions a and B

$$a' = a(I_s/I_r) \tag{5}$$

Expressions for I_s and I_r are written as follows (ref 7):

$$I_r = Ba^3/12 \tag{6}$$

and

$$\lim_{a/D \to 0} I_s = 0.01143\ D^4\ \alpha^7/16 \tag{7}$$

where for $a/D \to 0$, $\alpha = B/D$. The quantity B/D can be written in terms of a/D using Eq. (2). Combining Eqs. (2) and (4) through (7) gives the shallow crack limit for a round bar

$$\lim_{a/D \to 0} (KD^{5/2}/PS)/(a/D)^{1/2} = 3.75 \tag{8}$$

The forms of both the deep and shallow crack limits, Eqs. (3) and (8), were used to obtain a K parameter which converges to both limits

$$Y = (KD^{5/2}/PS)(1-a/D)^2/(a/D)^{1/2} \tag{9}$$

This was the parameter used for plotting the experimental and analytical results and the two K expressions in Figure 2.

One K expression was fitted to a combined set of data made up of finite element data (ref 4) for S/D = 4.0 and $0.125 < a/D < 0.625$, experimental compliance data (ref 3) for S/D = 6.67 and $0.548 < a/D < 0.698$, and the two limit solutions, Y = 0.497 and 3.75. The finite element datum for a/D = 0.0625 was excluded from the fit to allow the expression to converge to the shallow crack limit, believed to be more accurate than shallow crack finite element data. The expression is

$$(KD^{5/2}/PS)(1-a/D)^2/(a/D)^{1/2} = 3.75 - 10.93\ a/D + 20.05\ (a/D)^2$$
$$- 19.93\ (a/D)^3 + 7.56\ (a/D)^4$$
$$0 < a/D < 1 \quad , \quad S/D = 4.0 \tag{10}$$

Equation (10) fits the finite element results within 1.8 percent except within -4.5 percent for the deepest crack result at a/D = 0.625. Equation (10) fits the experimental results within 2.1 percent except within +7.5 percent for the deepest crack result at a/D = 0.698, and it fits the two limits within 0.6 percent. The poor fits with the deepest crack results are believed to be caused by end-point accuracy problems with both the experimental and numerical methods. In support of this, note that Eq. (10) passes between these two types of end-point data and proceeds smoothly to the deep crack limit. It should be noted also that use of the S/D = 6.67 experimental results for input to an S/D = 4.0 expression is considered to be approximately correct for relatively deep cracks, that is, for a/D > 0.5.

A second K expression was fitted to a combined set of data made up of experimental compliance data (ref 3) for S/D = 3.33 and 0.149 < a/D < 0.347, all the data for a/D < 0.5, and the two limit solutions. The expression is

$$(KD^{5/2}/PS)(1-a/D)^2/(a/D)^{1/2} = 3.75 - 11.98\ a/D + 24.40\ (a/D)^2$$
$$-25.69\ (a/D)^3 + 10.02\ (a/D)^4$$
$$0 < a/D < 1 \quad , \quad S/D = 3.33 \tag{11}$$

Equation (11) fits the experimental and analytical data within 2.3 percent except for the deepest crack results, as shown in Figure 2, and it fits the two limits within 0.6 percent.

DISCUSSION

Another recent set of numerical results can be compared with the expressions here, Eqs. (10) and (11). Kapp (ref 8) described collocation K results for rectangular bend specimens with similar span-to-depth ratios as those considered here, S/W = 3.0 and 4.0. A direct comparison is ill-advised due to the different shape, but the relative difference between results for S/W = 3 and 4 is of interest here. The largest difference between Eqs. (10) and (11) is for a/D = 0.2, where K for the S/D = 3.33 specimen is 3.6 percent lower than that for S/D = 4.0. Kapp found a 2.7 percent lower value of $(KBW^{3/2}/PS)$ at a/W = 0.2 for S/W = 3.0, compared with S/W = 4.0. So there is good agreement between these two independent sets of results.

Ouchterlony (ref 9) described a K formula for the S/D = 3.33 geometry based on Bush's work (ref 3). His formula agrees closely with Bush's S/D = 3.33 results for $0 < a/D < 0.35$ and with Bush's S/D = 6.67 results for $0.35 < a/D < 0.60$. The most significant difference between Ouchterlony's formula and Eq. (11) is at the short crack limit, where his formula is 15 percent below the limit. This is believed to be due to the inherent difficulties in Bush's experiments as $a/D \rightarrow 0$.

One additional point which should be discussed is the flat surfaces shown in Figure 1 at the locations of contact between specimen and support pins. These surfaces add to the complexity of the specimen, but in general they are required to ensure a known value of applied K for the round bar specimen. With no flat surfaces, the contact between specimen and pin would start as a point-contact which could lead to a significant plastic indentation in the specimen and loss of the required free-rolling loading condition. The small amount of

material removed to make the flat surfaces and the remoteness of these surfaces from the crack result in no significant effect on K.

CONCLUSION

The round bar bend specimen and associated K expressions in Figure 1 and Eqs. (10) and (11), respectively, can be used for general fracture mechanics testing, including K_{Ic} and fatigue crack growth rate tests. Estimates of the absolute accuracy of Eqs. (10) and (11) can be made, based upon how well they agree with the results of References 3, 4, 8, and the limit solutions. Equations (10) and (11) are believed to be accurate within 1.5 percent for $0 < a/D < 0.6$ and within 3.0 percent for $0.6 < a/D < 1.0$.

REFERENCES

1. "Standard Test Method for Plane-Strain Fracture Toughness of Metallic Materials," Annual Book of ASTM Standards, Vol. 03.01, ASTM, Philadelphia, 1987, pp. 680-715.
2. Chevron Notched Specimens: Testing and Stress Analysis, STP 855, (J. H. Underwood, S. W. Freiman, and F. I. Baratta, eds.), ASTM, Philadelphia, 1984.
3. Bush, A. J., "Experimentally Determined Stress-Intensity Factors for Single-Edge-Crack Round Bars Loaded in Bending," Experimental Mechanics, Vol. 16, 1976, pp. 249-257.
4. Daoud, O. E. K. and Cartwright, D. J., "Strain Energy Release Rates for a Straight-Fronted Edge Crack in a Circular Bar Subjected to Bending," Engineering Fracture Mechanics, Vol. 19, No. 4, 1984, pp. 701-707.
5. Tada, H., Paris, P. C., and Irwin, G. R., The Stress Analysis of Cracks Handbook, Del Research Corporation, Hellertown, PA, 1973, Section 9.
6. Roark, R. J. and Young, W. C., Formulas for Stress and Strain, McGraw-Hill Book Company, New York, 1975, pp. 61-69.
7. Tada, H., Paris, P. C., and Irwin, G. R., The Stress Analysis of Cracks Handbook, Del Research Corporation, Hellertown, PA, 1973, Section 2.
8. Kapp, J. A., "Stress Intensity Factors and Displacements for Arc-Bend Specimens Using Collocation," Fracture Mechanics: Eighteenth Symposium, ASTM STP 945, (D. T. Read and R. P. Reed, eds.), ASTM, Philadelphia, to be published.
9. Ouchterlony, Finn, "Extension of the Compliance and Stress Intensity Formulas for the Single Edge Crack Round Bar in Bending," Fracture Mechanics Methods for Ceramics, Rocks, and Concrete, STP 745, (S. W. Freiman and E. R. Fuller, Jr., eds.), ASTM, Philadelphia, 1981, pp. 237-256.

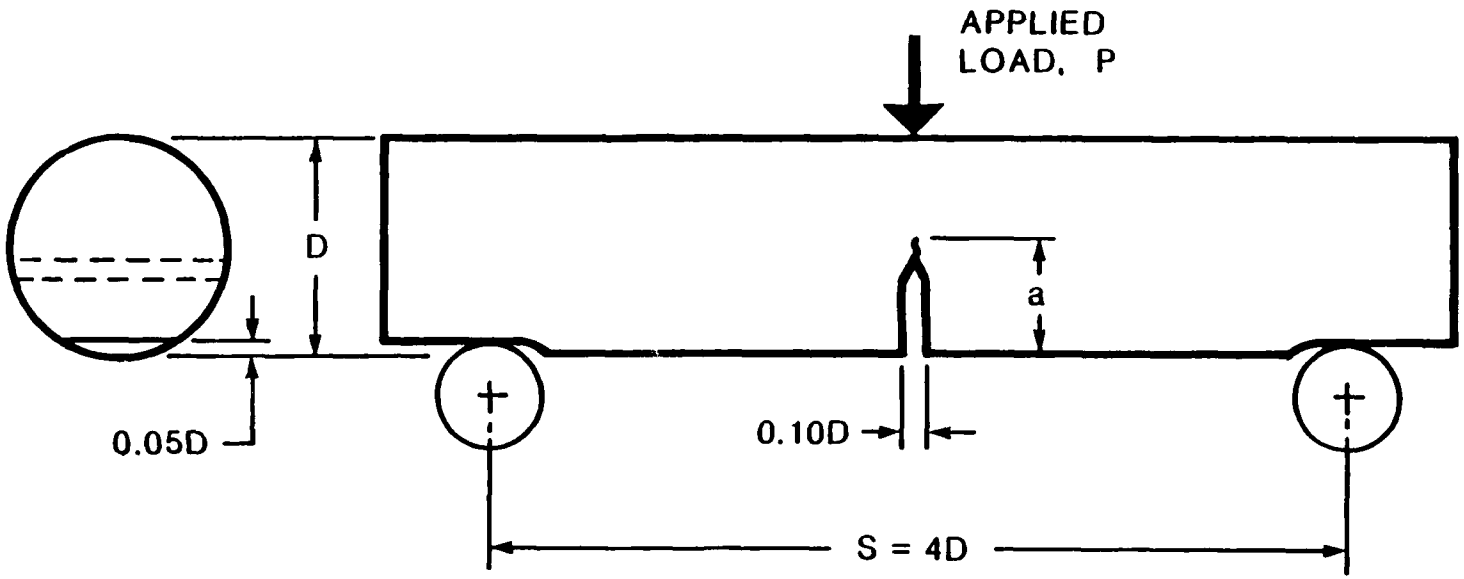

Figure 1. Round bar bend specimen for fracture testing.

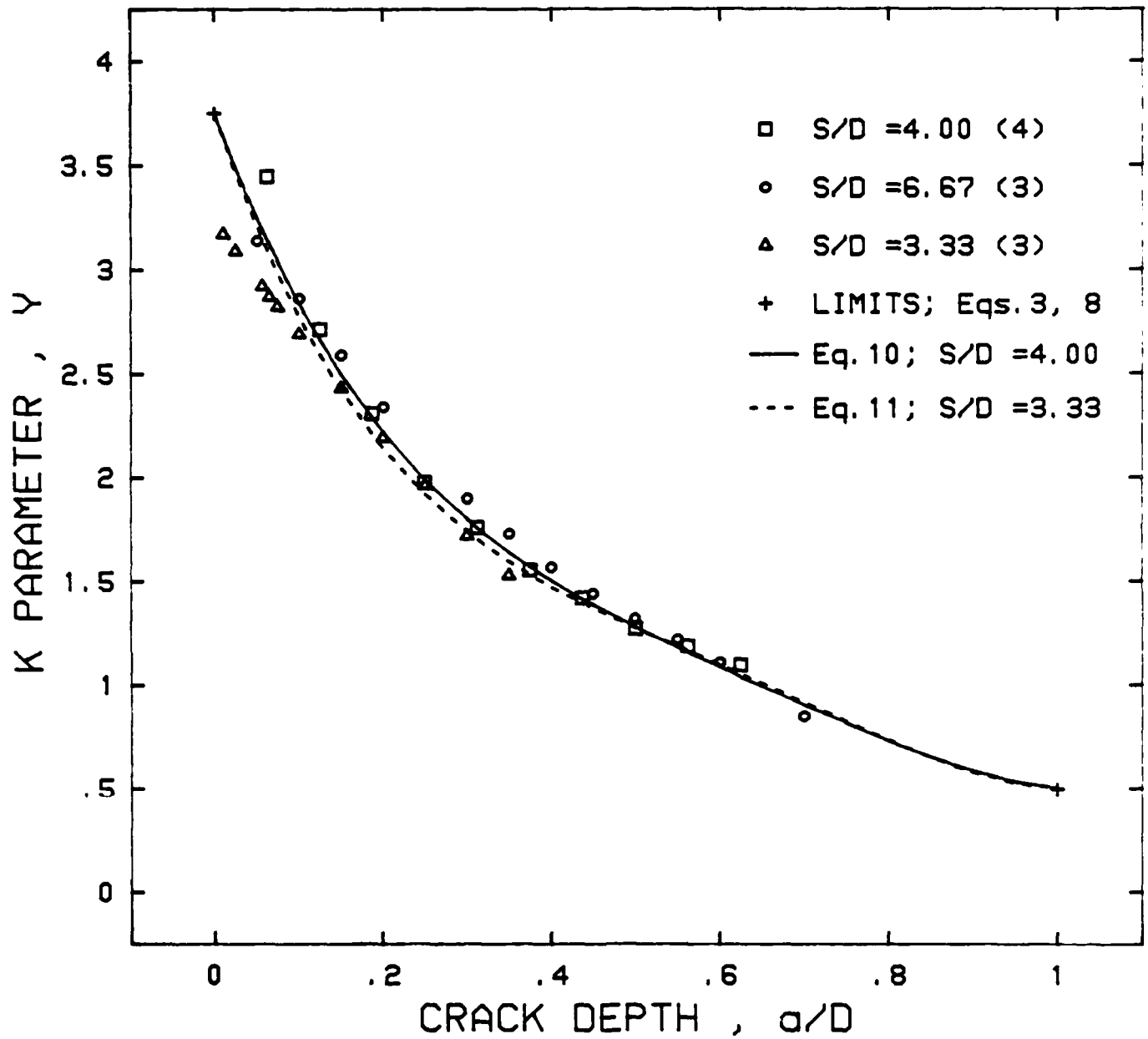

Figure 2. Stress intensity factor parameter for round bar bend specimen.

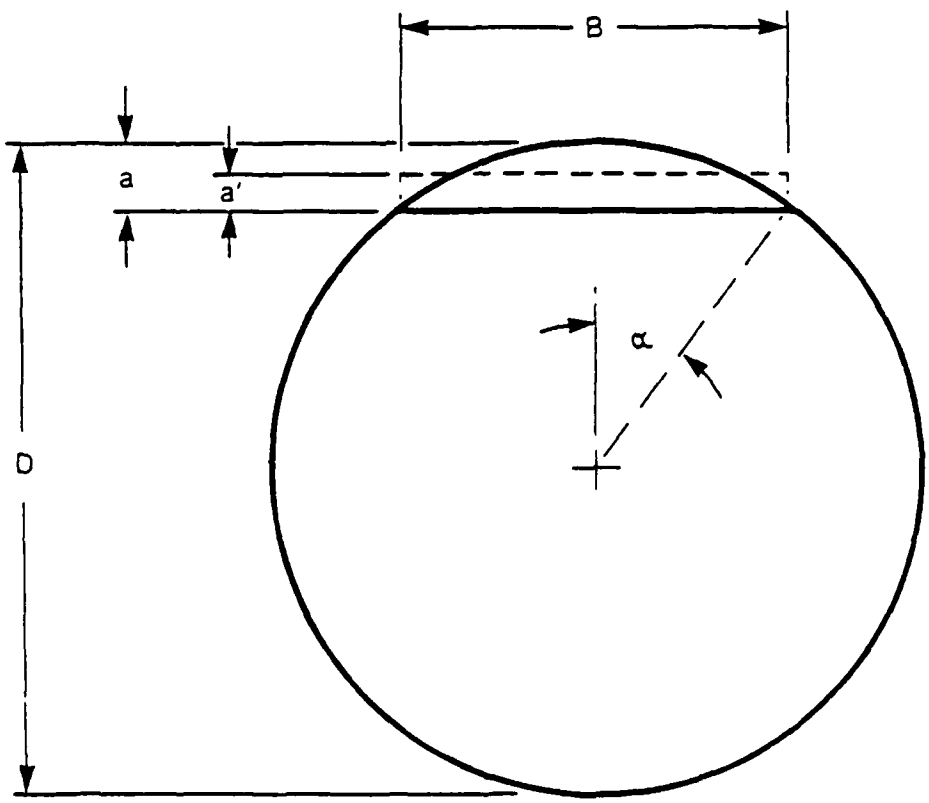

Figure 3. Shallow crack geometry for a round bar bend specimen.

TECHNICAL REPORT INTERNAL DISTRIBUTION LIST

	NO. OF COPIES
CHIEF, DEVELOPMENT ENGINEERING BRANCH	
ATTN: SMCAR-CCB-D	1
-DA	1
-DC	1
-DM	1
-DP	1
-DR	1
-DS (SYSTEMS)	1
CHIEF, ENGINEERING SUPPORT BRANCH	
ATTN: SMCAR-CCB-S	1
-SE	1
CHIEF, RESEARCH BRANCH	
ATTN: SMCAR-CCB-R	2
-R (ELLEN FOGARTY)	1
-RA	1
-RM	1
-RP	1
-RT	1
TECHNICAL LIBRARY	5
ATTN: SMCAR-CCB-TL	
TECHNICAL PUBLICATIONS & EDITING UNIT	2
ATTN: SMCAR-CCB-TL	
DIRECTOR, OPERATIONS DIRECTORATE	1
ATTN: SMCWV-OD	
DIRECTOR, PROCUREMENT DIRECTORATE	1
ATTN: SMCWV-PP	
DIRECTOR, PROCUREMENT ASSURANCE DIRECTORATE	1
ATTN: SMCWV-QA	

NOTE: PLEASE NOTIFY DIRECTOR, BENET LABORATORIES, ATTN: SMCAR-CCB-TL, OF ANY ADDRESS CHANGES.

TECHNICAL REPORT EXTERNAL DISTRIBUTION LIST

	NO. OF COPIES
ASST SEC OF THE ARMY RESEARCH AND DEVELOPMENT ATTN: DEPT FOR SCI AND TECH THE PENTAGON WASHINGTON, D.C. 20310-0103	1
ADMINISTRATOR DEFENSE TECHNICAL INFO CENTER ATTN: DTIC-FDAC CAMERON STATION ALEXANDRIA, VA 22304-6145	12
COMMANDER US ARMY ARDEC ATTN: SMCAR-AEE	1
SMCAR-AES, BLDG. 321	1
SMCAR-AET-O, BLDG. 351N	1
SMCAR-CC	1
SMCAR-CCP-A	1
SMCAR-FSA	1
SMCAR-FSM-E	1
SMCAR-FSS-D, BLDG. 94	1
SMCAR-IMI-I (STINFO) BLDG. 59 PICATINNY ARSENAL, NJ 07806-5000	2
DIRECTOR US ARMY BALLISTIC RESEARCH LABORATORY ATTN: SLCBR-DD-T, BLDG. 305 ABERDEEN PROVING GROUND, MD 21005-5066	1
DIRECTOR US ARMY MATERIEL SYSTEMS ANALYSIS ACTV ATTN: AMXSY-MP ABERDEEN PROVING GROUND, MD 21005-5071	1
COMMANDER HQ, AMCCOM ATTN: AMSMC-IMP-L ROCK ISLAND, IL 61299-6000	1
COMMANDER ROCK ISLAND ARSENAL ATTN: SMCRI-ENM ROCK ISLAND, IL 61299-5000	1
DIRECTOR US ARMY INDUSTRIAL BASE ENGR ACTV ATTN: AMXIB-P ROCK ISLAND, IL 61299-7260	1
COMMANDER US ARMY TANK-AUTMV R&D COMMAND ATTN: AMSTA-DDL (TECH LIB) WARREN, MI 48397-5000	1
COMMANDER US MILITARY ACADEMY ATTN: DEPARTMENT OF MECHANICS WEST POINT, NY 10996-1792	1
US ARMY MISSILE COMMAND REDSTONE SCIENTIFIC INFO CTR ATTN: DOCUMENTS SECT, BLDG. 4484 REDSTONE ARSENAL, AL 35898-5241	2
COMMANDER US ARMY FGN SCIENCE AND TECH CTR ATTN: DRXST-SD 220 7TH STREET, N.E. CHARLOTTESVILLE, VA 22901	1
COMMANDER US ARMY LABCOM MATERIALS TECHNOLOGY LAB ATTN: SLCMT-IML (TECH LIB) WATERTOWN, MA 02172-0001	2

NOTE: PLEASE NOTIFY COMMANDER, ARMAMENT RESEARCH, DEVELOPMENT, AND ENGINEERING CENTER, US ARMY AMCCOM, ATTN: BENET LABORATORIES, SMCAR-CCB-TL, WATERVLIET, NY 12189-4050, OF ANY ADDRESS CHANGES.

TECHNICAL REPORT EXTERNAL DISTRIBUTION LIST (CONT'D)

	NO. OF COPIES
COMMANDER US ARMY LABCOM, ISA ATTN: SLCIS-IM-TL 2800 POWDER MILL ROAD ADELPHI, MD 20783-1145	1
COMMANDER US ARMY RESEARCH OFFICE ATTN: CHIEF, IPO P.O. BOX 12211 RESEARCH TRIANGLE PARK, NC 27709-2211	1
DIRECTOR US NAVAL RESEARCH LAB ATTN: MATERIALS SCI & TECH DIVISION	1
CODE 26-27 (DOC LIB) WASHINGTON, D.C. 20375	1

	NO. OF COPIES
COMMANDER AIR FORCE ARMAMENT LABORATORY ATTN: AFATL/MN EGLIN AFB, FL 32542-5434	1
COMMANDER AIR FORCE ARMAMENT LABORATORY ATTN: AFATL/MNF EGLIN AFB, FL 32542-5434	1
METALS AND CERAMICS INFO CTR BATTELLE COLUMBUS DIVISION 505 KING AVENUE COLUMBUS, OH 43201-2693	1

NOTE: PLEASE NOTIFY COMMANDER, ARMAMENT RESEARCH, DEVELOPMENT, AND ENGINEERING CENTER, US ARMY AMCCOM, ATTN: BENET LABORATORIES, SMCAR-CCB-TL, WATERVLIET, NY 12189-4050, OF ANY ADDRESS CHANGES.

END
DATE
FILMED
9-88
DTIC