DTIC FILE COPY

AD-A188 972

AD

TECHNICAL REPORT ARCCB-TR-87030

HYDROGEN EMBRITTLEMENT OF GUN STEEL

GERALD L. SPENCER

DTIC
ELECTE
DEC 1 5 1987
S D
H

NOVEMBER 1987

US ARMY ARMAMENT RESEARCH, DEVELOPMENT
AND ENGINEERING CENTER
CLOSE COMBAT ARMAMENTS CENTER
BENÉT WEAPONS LABORATORY
WATERVLIET, N.Y. 12189-4050

APPROVED FOR PUBLIC RELEASE; DISTRIBUTION UNLIMITED

87 12 0 108

SECURITY CLASSIFICATION OF THIS PAGE (When Data Entered)

REPORT DOCUMENTATION PAGE

READ INSTRUCTIONS BEFORE COMPLETING FORM

1. REPORT NUMBER
ARCCB-TR-87030

2. GOVT ACCESSION NO.

3. RECIPIENT'S CATALOG NUMBER

4. TITLE (and Subtitle)
HYDROGEN EMBRITTLEMENT OF GUN STEEL

5. TYPE OF REPORT & PERIOD COVERED
Final

6. PERFORMING ORG. REPORT NUMBER

7. AUTHOR(s)
Gerald L. Spencer

8. CONTRACT OR GRANT NUMBER(s)

9. PERFORMING ORGANIZATION NAME AND ADDRESS
US Army ARDEC
Benet Laboratories, SMCAR-CCB-TL
Watervliet, NY 12189-4050

10. PROGRAM ELEMENT, PROJECT, TASK AREA & WORK UNIT NUMBERS
AMCMS No. 3111CT120
PRON No. 4A6CAV0202M71A

11. CONTROLLING OFFICE NAME AND ADDRESS
US Army ARDEC
Close Combat Armaments Center
Picatinny Arsenal, NJ 07806-5000

12. REPORT DATE
November 1987

13. NUMBER OF PAGES
73

14. MONITORING AGENCY NAME & ADDRESS(if different from Controlling Office)

15. SECURITY CLASS. (of this report)
UNCLASSIFIED

15a. DECLASSIFICATION/DOWNGRADING SCHEDULE

16. DISTRIBUTION STATEMENT (of this Report)
Approved for public release; distribution unlimited.

17. DISTRIBUTION STATEMENT (of the abstract entered in Block 20, if different from Report)

18. SUPPLEMENTARY NOTES
This was a thesis in partial fulfillment of the requirements for degree of Master of Engineering at Rensselaer Polytechnic Institute, Troy, New York.

19. KEY WORDS (Continue on reverse side if necessary and identify by block number)
Hydrogen Embrittlement
Notched Tensile Testing
Hydrogen Analysis
Cadmium Plating

20. ABSTRACT (Continue on reverse side if necessary and identify by block number)
The objectives of this engineering project were to determine the critical concentration of hydrogen at which gun steel is embrittled, and to evaluate the effects of some acid solutions on gun steel to determine safe exposure parameters.

(CONT'D ON REVERSE)

DD FORM 1 JAN 73 1473 EDITION OF 1 NOV 65 IS OBSOLETE

UNCLASSIFIED

SECURITY CLASSIFICATION OF THIS PAGE (When Data Entered)

20. ABSTRACT (CONT'D)

Specimens were taken from gun steel which is very similar to ASTM A723-grade 2- class 4 with a yield strength of 165 Ksi in the quenched and tempered condition. Notched tensile bars were charged with hydrogen by electrolysis. After charging, the specimens were plated with cadmium to a thickness of 0.36 mil to provide a barrier coating which would retard the loss of hydrogen. After plating, the specimens were given a heat treatment at 300°F for 35 minutes to homogenize the sharp gradient of hydrogen within the specimen.

Notched tensile tests were conducted at room temperature and at a slow strain rate, 0.00026/min, to detect hydrogen embrittlement. With a specimen charged for 16 hours, the Notched Tensile Strength (NTS) was 97.0 percent of the original NTS and the fracture did not show embrittlement. Two specimens with a 20-hour charging time were tested with 68 percent and 77 percent of the original NTS and the fractures clearly were embrittled. Scanning electron microscopic photographs of the fractured surface verified intergranular fracture typical of hydrogen embrittlement. Hydrogen analysis was conducted on a LECO HW-100 hydrogen analyzer and diffusible hydrogen was extracted at 200°C. Hydrogen was measured for five specimens charged for 16 hours and the mean value for the critical concentration for hydrogen was 1.71 ml/100g or 1.53 ppm. Using a pickling solution of 50 percent hydrochloric acid in corrosion tests at room temperature, it was determined that it would take approximately 110 hours for the hydrogen concentration to reach the critical concentration of 1.7 ml/100g (1.5 ppm) for this gun steel.

CONTENTS

	Page
LIST OF TABLES	iii
LIST OF FIGURES	iv
ACKNOWLEDGEMENT	vi
ABSTRACT	vii
1. INTRODUCTION AND DISCUSSION OF THE PROBLEM	1
2. HISTORICAL REVIEW	
2.1 DISCUSSION OF PREVIOUS WORK AT WATERVLIET ARSENAL	4
2.2 DISCUSSION OF PREVIOUS WORK AT RPI	7
3. OBJECTIVES	9
4. THEORETICAL DISCUSSION OF HYDROGEN EMBRITTLEMENT	10
5. PROCEDURES	12
5.1 SUMMARY OF PROCEDURES AND TESTS FOR ELECTROLYTIC CHARGING	12
5.2 SPECIMEN PREPARATION	13
5.3 ELECTROLYTIC CHARGING OF HYDROGEN	17
5.4 CADMIUM PLATING	17
5.5 HOMOGENIZING HEAT TREATMENT	19
5.6 WEIGHING AND SUBSEQUENT ANALYSIS	21
5.7 NOTCHED TENSILE TESTING	22
5.8 HYDROGEN ANALYSIS	24
5.9 HIGHER TEMPERATURE (800C) HYDROGEN ANALYSIS PROCEDURES	26
5.10 CORROSION TESTING PROCEDURES	26
6. DISCUSSION OF RESULTS	28
6.1 NOTCHED TENSILE STRENGTH AND HYDROGEN ANALYSIS OF ELECTROLYTIC CHARGED SPECIMENS	28
6.2 CONVERSION ml/100g to ppm	32

DTIC COPY INSPECTED

For

Dist

A-1

CONTENTS

Page

6.3 CALCULATION OF HYDROGEN GENERATED COMPARED TO THE HYDROGEN ABSORBED BY STEEL SPECIMENS 32
6.4 DEVELOPMENT OF ELECTROLYTIC CHARGING CURVE .. 33
6.5 NOTCHED TENSILE STRENGTH VS HYDROGEN CONCENTRATION 33
6.6 SCANNING ELECTRON MICROSCOPIC PHOTOGRAPHS ... 36
6.7 SENSITIVITY ANALYSIS OF ELECTROLYTIC CHARGING OF HYDROGEN 41
6.8 RESULTS OF CORROSION TESTING 43
6.9 RESULTS DIFFUSION GRADIENTS 47

6.9.1 DIFFUSION COEFFICIENT 47
6.9.2 TYPICAL DIFFUSION GRADIENTS ACROSS THE SPECIMEN 49

6.10 RESULTS, HIGHER TEMPERATURE (800°C) HYDROGEN ANALYSIS 53

7. CONCLUSIONS 55

8. LITERATURE CITED 60

9. BIBLIOGRAPHY 62

LIST OF TABLES

		Page
Table I	MECHANICAL PROPERTIES OF GUN STEEL	13
Table II	CHEMICAL ANALYSIS	15
Table III	NOTCHED TENSILE TEST, HYDROGEN ANALYSIS DATA	29
Table IV	CORROSION DATA	44
Table V	HYDROGEN ANALYSIS AT HIGHER TEMPERATURE	53

LIST OF FIGURES

		Page
FIGURE 1	The Solubility of Hydrogen in Iron at One Atmospheric Pressure	2
FIGURE 2	Apparatus for Determination of Diffusible Hydrogen Content	8
FIGURE 3	Gun Tube Forging, Location of Specimen	14
FIGURE 4	Notched Tensile Bar	16
FIGURE 5	Electrolytic Charging of Hydrogen Apparatus	18
FIGURE 6	Cadmium Plating Apparatus	20
FIGURE 7	Notch Tensile Strength vs. Temperature and Crosshead Speed	23
FIGURE 8	Hydrogen Detector	25
FIGURE 9	Notched Tensile Test Charts	31
FIGURE 10	Electrolytic Charging of Hydrogen, Hydrogen Concentration vs. Time	34
FIGURE 11	Hydrogen Concentration vs. % Original Notch Tensile Strength	35
FIGURE 12	SEM Photo, Fractured Surface of Embrittled Specimen (#8), 10X	37
FIGURE 13	SEM Photo, Fracture Surface of Unembrittled Specimen (#5), 10X	38
FIGURE 14	SEM Photo, Showing Intergranular Fracture (#8 embrittled), 850X	39
FIGURE 15	SEM Photo, Showing Microvoid Coalescence, Typical of Ductile Fracture (#5 unembrittled), 1000X	40
FIGURE 16	Corrosion Testing, Weight Loss vs. Time ...	45
Figure 17	Corrosion of Gun Steel in Pickling Solution, Hydrogen Concentration vs. Time	46

LIST OF FIGURES

		Page
Figure 18	Diffusion Coefficient (D) of Hydrogen as a Function of Temperature for AISI 4340 Steel	48
Figure 19	Diffusion Coefficient (D) of Hydrogen for Steels as a Function of Temperature	50
Figure 20	Typical Diffusion Gradients Across Specimen	51

ACKNOWLEDGEMENT

I wish to express my gratitude to Dr. Ernest F. Nippes for guidance during the preparation of this report.

Special thanks are extended to John Zalinka for his assistance in tensile testing, to John Cammarene for his assistance in laboratory apparatus, to Edward Carbo for his assistance in producing figures, and to Michele Gervais for her assistance in typing this report.

ABSTRACT

Hydrogen embrittlement of steel is a well-known problem and manifests itself in cracking and brittle failures of the steel at or near room temperature. In regard to the manufacture of large guns, there have been and the possibility continues for, hydrogen embrittlement problems arising from, faulty melting practice during steelmaking, welding, electroplating, and exposure to acid solutions. The objectives of this engineering investigation were to determine the critical concentration of hydrogen at which gun steel is embrittled, and to evaluate the effects of some acid solutions on gun steel to determine safe exposure parameters.

Specimens were taken from gun steel which has its own specification, but is very similar to ASTM A723-grade 2-class 4 and is also somewhat similar to AISI 4330 with a yield strength of 165 Ksi in the quenched and tempered condition. Notched tensile bars were charged with hydrogen by electrolysis using the specimen as the cathode in a 10% H_2SO_4 solution at room temperature and using a low voltage DC power supply. After charging, the specimens were plated with cadmium to a thickness of 0.36 mils (9 um), to provide a barrier coating which would retard the loss of hydrogen. After plating, the specimens were given a heat treatment at 300F (149C) for 35 minutes to homogenize the sharp gradient

of hydrogen within the specimen. Following this, the specimens were either immediately tensile tested or stored under liquid nitrogen, -320F (-196C) until analysis for hydrogen was performed.

Notched tensile tests were conducted at room temperature and at a slow strain rate, 0.00026/min, to detect hydrogen embrittlement. With a specimen charged for 16 hours, the Notched Tensile Strength (NTS) was 97.0% of the original NTS and the fracture did not show embrittlement. Two specimens with a 20-hour charging time were tested with 68% and 77% of the original NTS and the fractures clearly were embrittled. Scanning electron microscopic photographs of the fractured surface verified intergranular fracture typical of hydrogen embrittlement. Sixteen hours of electrolytic charging was determined to be the threshold of embrittlement. Hydrogen analysis was conducted on a LECO HW-100 hydrogen analyzer and diffusible hydrogen was extracted at 200°C. Hydrogen was measured for five specimens charged for 16 hours and the mean value for the critical concentration for hydrogen was 1.71 ($\pm$ 0.37) ml/100g or 1.53 ppm. Using a pickling solution of 50% HCl in corrosion tests at room temperature, it was determined that it would take approximately 110 hours for the hydrogen concentration to reach the critical concentration of 1.7 ml/100g (1.5 ppm) for this gun steel.

Notched tensile testing with sufficiently slow strain rates (less than 0.05/min) was found to be an excellent, discriminating test for hydrogen embrittlement. Hydrogen analysis data showed significant variability and this variability might be a result of the temperature variations during the hydrogen charging process and the inherent variation in each specimen's microstructure. The diffusion of hydrogen into gun steel at room temperatures is a relatively slow process. Electrolytic charging of hydrogen moves the hydrogen to the cathode specimen's surface, but the rate controlling process, for getting the hydrogen into the steel, is diffusion. With exposure to 50% HCl acid solutions, the amount of hydrogen entering the steel is controlled by the diffusion process. Diffusible hydrogen is the hydrogen that may be extracted at 200°C. Diffusible hydrogen is significant in that it is sufficiently mobile to diffuse to high stressed areas and cause hydrogen assisted cracking. The steel may be purged of its hydrogen by simply heat treating at 400F (200°C) for sufficient time depending on the cross sectional size of the item. Hydrogen atoms diffuse throughout, both inward and outward, and when hydrogen atoms reach the surface they combine to form the gas and are eliminated. Cadmium plating requires additional time for hydrogen elimination because of very slow diffusion through its dense plate.

PART 1

INTRODUCTION AND DISCUSSION OF THE PROBLEM

Hydrogen embrittlement of steel is a well-known problem and manifests itself in cracking and brittle failures of the material at or near room temperature. Cracking may not develop immediately, but may be delayed for as much as several days. Especially significant are premature fractures which occur well within design loading. In regard to the manufacture of large guns, there have been, and the possibility continues for, hydrogen-embrittlement problems arising from the following processes.

During steelmaking and welding, which involve melting and solidification, hydrogen which is much more soluble in the liquid than in the solid steel, can easily enter the steel from contaminants such as water or moisture. In this case, water is dissociated at high temperature and the resultant hydrogen is easily absorbed by the liquid steel. Upon cooling, the hydrogen is "frozen in" during solidification. This is not a result of typical steelmaking, it only results from a faulty process. The solubility of hydrogen in iron is approximately 0.5 ml/100g (0.6 ppm) at room temperature (25°C) and increases significantly with temperature and with certain phase changes as shown in Figure 1.[1,2] Hydrogen embrittlement is well known when welding certain steels such as relatively

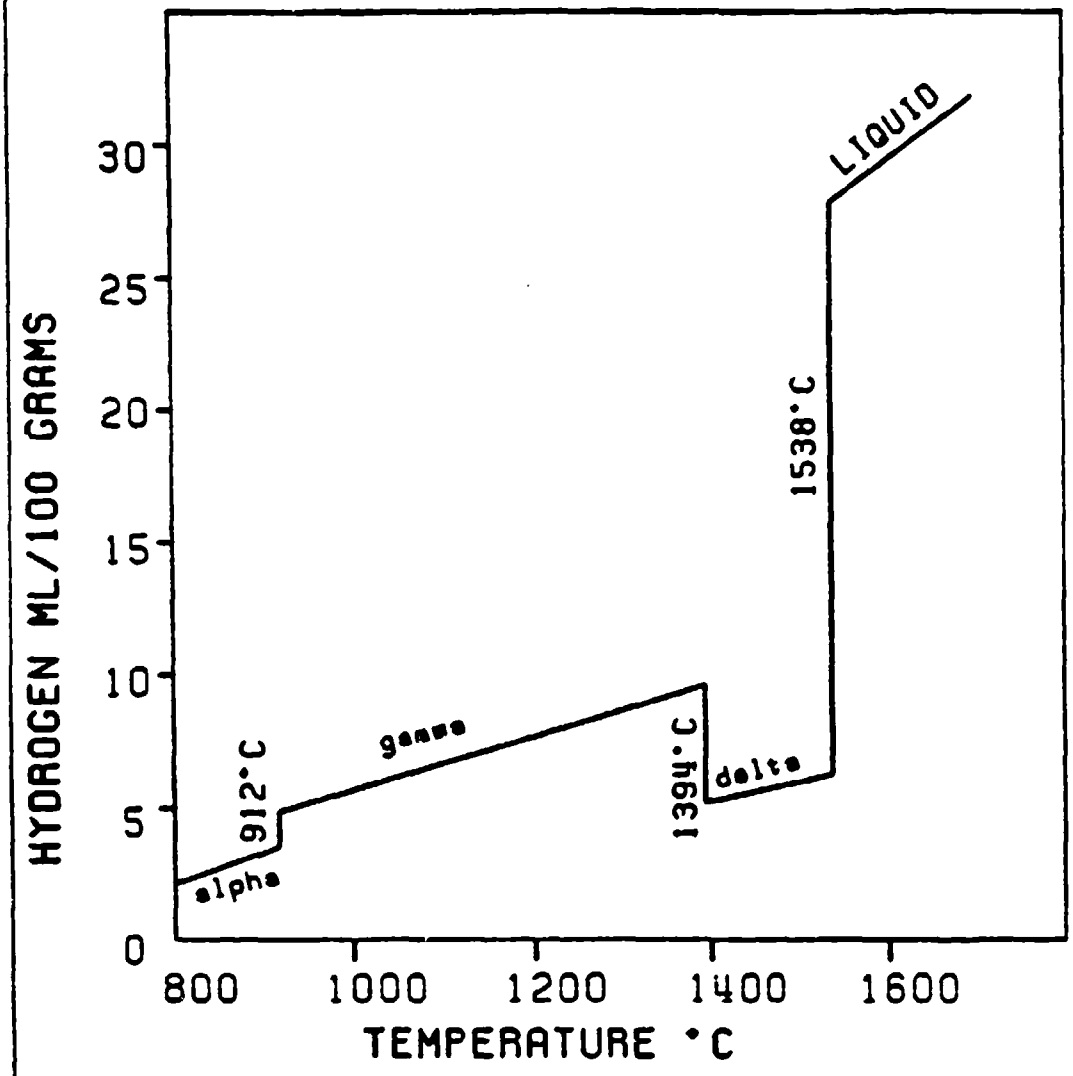

THE SOLUBILITY OF HYDROGEN IN IRON AT ONE ATMOSPHERE PRESSURE

SOURCE: TETLEMAN, 1962

FIGURE 1

high carbon, martensitic, high strength steels, an example of which is gun steel (similar to ASTM A 723 Grade 2 or AISI 4330). For this reason, welding is not allowed on guns (cannon, tube, or breech).

During certain electroplating processes such as chromium plating of gun bores and cadmium plating of hardware items such as bolts, the positive metal ions accept electrons and these metal atoms are deposited on the cathode. The item becomes coated with the desired metal plate; however, hydrogen ions also accept electrons, and the resultant hydrogen atoms are mixed in with the plated metal. As a result, the plate becomes relatively rich in hydrogen which can subsequently diffuse into the base steel.

During exposure to acid solutions, the acid attacks or corrodes the steel; this reaction is accompanied by hydrogen evolution and by some hydrogen diffusing into the steel. In reviewing this type process which may occur in production or as a cleaning process after manufacture, the writer became aware of the danger of hydrogen embrittlement and the uncertainty in the exposure parameters due to acid solutions: such as time, temperature, types, and concentrations of the acidic solutions. In addition, the critical or threshold concentration of hydrogen was not well established for gun steel. A conservative estimate of 1.0 ppm was the "thumb rule" for a gun steel with a yield strength of 160 ksi ($\sim$1075 MPa).

PART 2

HISTORICAL REVIEW

2.1 Discussion of Previous Work at Watervliet Arsenal

In 1956 and 1958, Catherine Penrose, a research metallurgist at the Benet Weapons Laboratory of Watervliet Arsenal[3,4] studied hydrogen embrittlement which resulted from the electrodeposition of 0.002 inch or 2 mils (0.05mm) of chromium. She evaluated the embrittlement by performing mechanical property tests using 0.505 inch (12.8mm) tensile bars of the gun steel specified at that time for 90mm M36 guns.

Embrittlement was determined by the decrease in ductility, as measured by the decreases in elongation (El) and the Reduction in Area (RA). It was shown that the chromium plating caused marked decreases in El and RA and that subsequent heat treatment restored the ductility. The RA data are summarized below:

RA as machined	RA after plating	RA after heat treat
41.4%	22.1%	40.3% (4 hrs, 400F)

Various temperature-time heat treatment combinations were evaluated by utilizing Charpy V-notch impact tests, bend tests, and fatigue endurance limit tests. The temperature of 400°F (204°C) was selected as optimal because above 600F (316°C) there is a decrease in toughness, exhibited by the Charpy V-notch impact values.

In addition to the effects on mechanical properties, some hydrogen analyses were performed by Allegheny Ludlum Steel using the vacuum-fusion technique (hydrogen extracted and analyzed at the melting point. The data are summarized below:

Sample unplated	1.40, 1.96 ppm
Sample from test bar, chrome plated and the plate removed by machining	3.1, 3.2 ppm
Sample from test bar chrome plated, heat treated at 400F for 4 hrs, and then plate removed by machining	2.4, 2.2 ppm

It is noteworthy that the analyst from Allegheny Ludlum advised that "the vacuum-fusion technique has not been sufficiently standardized to guarantee absolute accuracy, but is useful for comparing results".

Penrose concluded that the optimal heat treatment was 400F (204°C) at two hours per inch of thickness of the item.

In 1967, William Daniels, also a metallurgist at Benet Weapons Laboratory of Watervliet Arsenal[5] studied hydrogen embrittlement in an effort to evaluate the minimum furnace time necessary to remove hydrogen effectively after chromium plating. He used 3/8" (9.5mm) diameter x 1" (25.4mm) cylindrical specimens trepanned from a plated gun tube section. In this case, hydrogen analysis, rather than testing for mechanical properties, was the means of evaluating the effectiveness of the thermal treatment.

Hydrogen-gas analysis was performed by vacuum extraction and fractional-freezing techniques. Gases, extracted from the specimens at 1000°C, consisted of a mixture of carbon monoxide, carbon dioxide, hydrogen, and nitrogen. The extracted gases were collected in a calibrated volume and a pressure reading taken. Then the gases were passed over copper oxide where the hydrogen was oxidized to water. After freezing out the water from the remaining gas mixture, the hydrogen content was calculated and expressed in microliters/gram of sample. The data gathered showed much variability to the extent that Daniels stated that the hydrogen content of the gun-steel samples appeared to be independent of the thermal treatment time or temperature. The value he obtained for an unplated tube was 1 microliter/ gram (0.09 ppm) which he described as "unusually low". These data illustrate inherent variability in the hydrogen analysis data and difficulty in obtaining meaningful data due to the many opportunities in losing hydrogen, i.e., during machining to remove samples from the plated gun tube.

In recent times, studies have been performed[6] to determine failures of large, cadmium-plated bolts. Hydrogen embrittlement due to insufficient heat treatment for hydrogen removal is believed to be one of the causes of some of these failures.

2.2 Discussion of Previous Work at RPI

Professors E. F. Nippes, W. F. Savage, and associated students of the Materials Engineering Department at RPI have been concerned with the measurement of hydrogen in steel and hydrogen embrittlement and have worked extensively in this area. Of particular relevance were the following:

(1) The determination of diffusible hydrogen in weldments by the RPI silicone-oil extraction method which measures the diffusible hydrogen collected by a burette in silicone oil at 100°C for only 90 minutes.[7] See Figure 2. This method is more rapid, reliable, safe, and inexpensive when compared to the BWRA/IIW vacuum extraction over mercury which is conducted at room temperature for 72 hours.

(2) In the late 70's and early 80's HY80 and HY130 steels were checked for the critical hydrogen concentrations which were determined to be 6 ppm for HY80 steel[8] and 3 ppm for HY130 steel.[9] This shows that, as the strength of the steel increases (HY80 to HY130), the susceptibility to hydrogen embrittlement also increases.

DETERMINATION OF DIFFUSIBLE HYDROGEN CONTENT

SOURCE: BALL ET AL, 1981

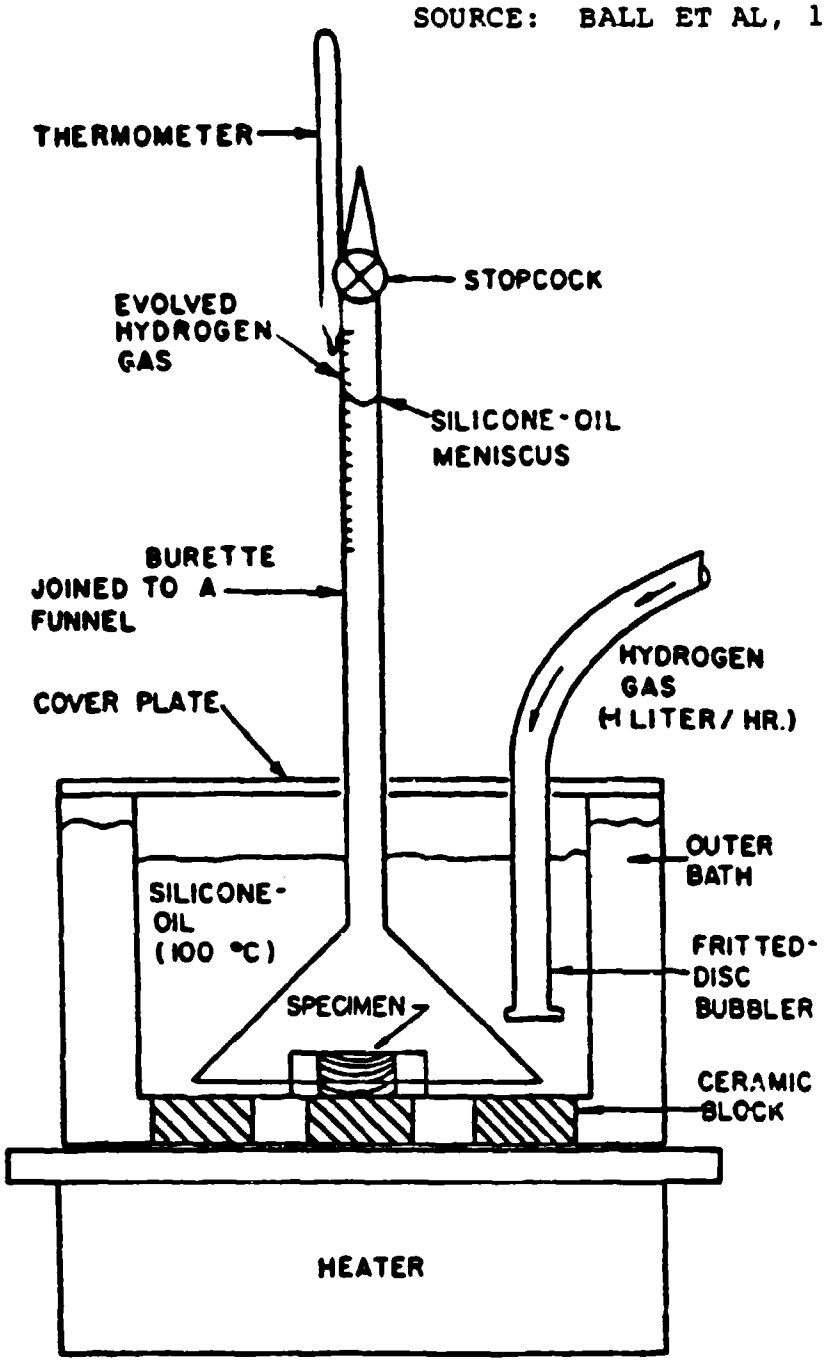

Silicone-Oil Extraction Method

FIGURE 2

PART 3

OBJECTIVES

The objectives of this engineering investigation were:

To determine the critical concentration of hydrogen in ml/100g and ppm at which gun steel is embrittled.

To evaluate the effects of some acid solutions on gun steel to determine safe exposure parameters to prevent hydrogen embrittlement without subsequent heat treatment.

PART 4

THEORETICAL DISCUSSION OF HYDROGEN EMBRITTLEMENT

Hydrogen embrittlement or hydrogen assisted cracking requires four necessary conditions:[10]

1. A susceptible crack sensitive microstructure. Martensite has been found to be the most susceptible steel microstructure.

2. Critical concentration of diffusible hydrogen at a stress concentration within the microstructure (usually at a microscopic crack tip).

3. In general, a combined stress of residual and applied stress greater than the yield stress is considered the critical magnitude.

4. A temperature in the range of -150 to 400°F (-100 to 200°C). Room temperature 25°C (77F) is the most sensitive temperature as shown in Figure 7.

Hydrogen has been shown to be the cause for embrittlement, but the exact mechanism for hydrogen embrittlement is not clear and has been the subject of various theories. One of the major theories that has gained acceptance was put forth by Troiano.[11]

Troiano's theory is one of lattice embrittlement. He believes that atomic hydrogen diffuses to the region of highest triaxial stress such as a microscopic crack tip. When the hydrogen concentration exceeds a critical level, it will cause lattice decohesion, i.e., atomic bonds are broken, thus extending the crack. The new tip of the extended crack becomes the higher region of stress and consequently hydrogen diffuses to this new crack tip thus continuing the crack process. Because the hydrogen diffusion takes time, cracking is not continuous. Hydrogen embrittlement is characterized by stepwise growth.

PART 5

PROCEDURES

5.1 Summary of Procedures and Tests for Electrolytic Charging

A. SPECIMEN PREPARATION

B. ELECTROLYTIC CHARGING OF HYDROGEN

1. 10% H_2SO_4 with 0.3g/l As_2O_3

   Lead anode, specimen cathode

   Current density 3 mA/in^2 (0.47 mA/cm), 85F (29.5°C)

2. Rinse H_2O, 0.5N solution NaOH, H_2O

C. CADMIUM PLATING

1. Cyanide plating bath

   Cadmium anodes, specimen cathode

   Current density 106 mA/in^2 (16 mA/cm^2), 85-90F (29.5 - 32°C)

   Plating time of 19 min yielded 0.36 mil (9 um) thickness

D. HOMOGENIZING HEAT TREATMENT

300F $\pm$ 10 (149 C $\pm$ 5), 35 minutes

E. COOLED ICE WATER, DRIED, WEIGHED

F. TENSILE TEST

Slow strain rate <0.002 min, room temp 70F (21C)

Plot load vs strain, record peak load

OR

G. HYDROGEN ANALYSIS

Transported in liquid nitrogen -320F (-196C)

LECO HW-100 at 200°C for 18 hours. Record total hydrogen in ml/100g

5.2 Specimen Preparation

Specimens of gun steel were taken from a section of a gun tube forging which had been subjected to a cross sectional reduction of approximately 3.1. The breech end was selected as the worst case in that there would be lower forging reduction and consequently inferior mechanical properties, as compared to the muzzle end of the forging. Transverse specimens were machined from the breech section as shown in the Figure 3. With these transverse specimens, the inclusions that tend to run in the axial direction would be pulled apart during tensile testing; thus the worst case mechanical properties would be evaluated. Mechanical properties which were measured, are shown in Table I.

TABLE I. MECHANICAL PROPERTIES OF GUN STEEL

	Units	#1	#2	#3
Yield Strength 0.1% offset	KSI (MPa)	165.0 (1,138)	165.0 (1,138)	166.2 (1,146)
Tensile strength	KSI (MPa)	182.7 (1,260)	182.4 (1,258)	182.7 (1,260)
Reduction in Area	%	54.8%	52.1%	53.1%
Elongation	%	14.9%	15.4%	14.3%
Charpy Impact @ -40°	Joules	34.0	34.0	35.0
Hardness	HRC	HRC 39-40		

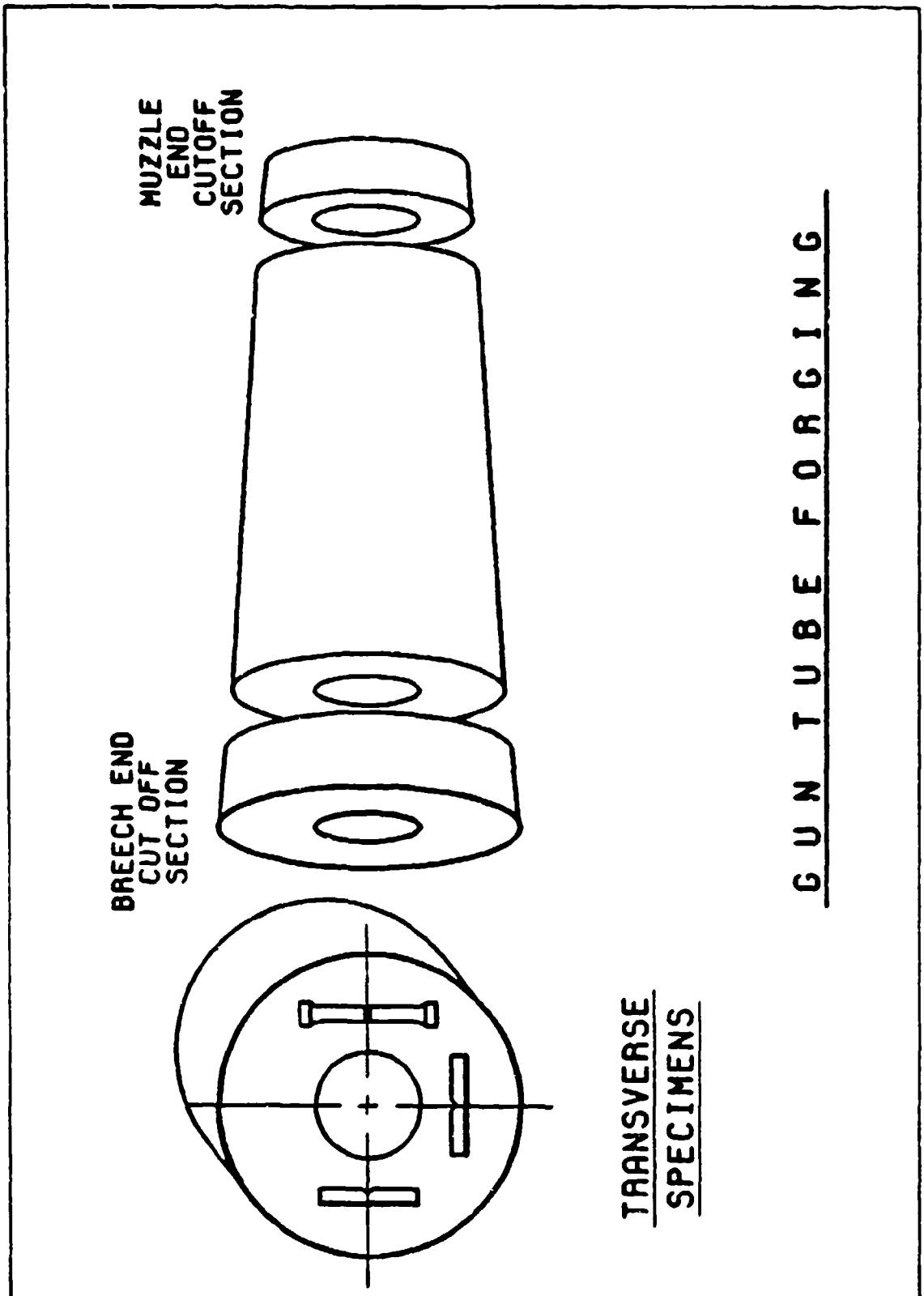
MUZZLE END CUTOFF SECTION
BREECH END CUT OFF SECTION
GUN TUBE FORGING
TRANSVERSE SPECIMENS

FIGURE 3

Chemical analysis is shown for information in Table II.

TABLE II. CHEMICAL ANALYSIS

Carbon	0.32	Phosphorus	0.008
Manganese	0.59	Sulfur	0.005
Nickel	2.75	Silicon	0.197
Chromium	0.97	Aluminum	0.010 (total)
Vanadium	0.11	Titanium	0.000
Molybdenum	0.54		

Tensile bars, 0.387 inch (9.8 mm), were machined in a Crush Form Grinder. The notch, as shown in Figure 4, was machined in a lathe; the notched diameter and radius were checked on a comparator to assure dimensions. Rectangular bars 2 in x 1/2 in x 1/4 in (5.08 cm x 1.27 cm x 0.63 cm) were also machined. These were polished using successively finer grit paper starting with grade 180 through 240, 320, 400 and 600. Finally, the rectangular bar specimens were polished on a metallographic wheel impregnated with 5 um diamond paste. All specimens were weighed on a balance that measured one tenth of a milligram; actual weights were rounded to the nearest milligram.

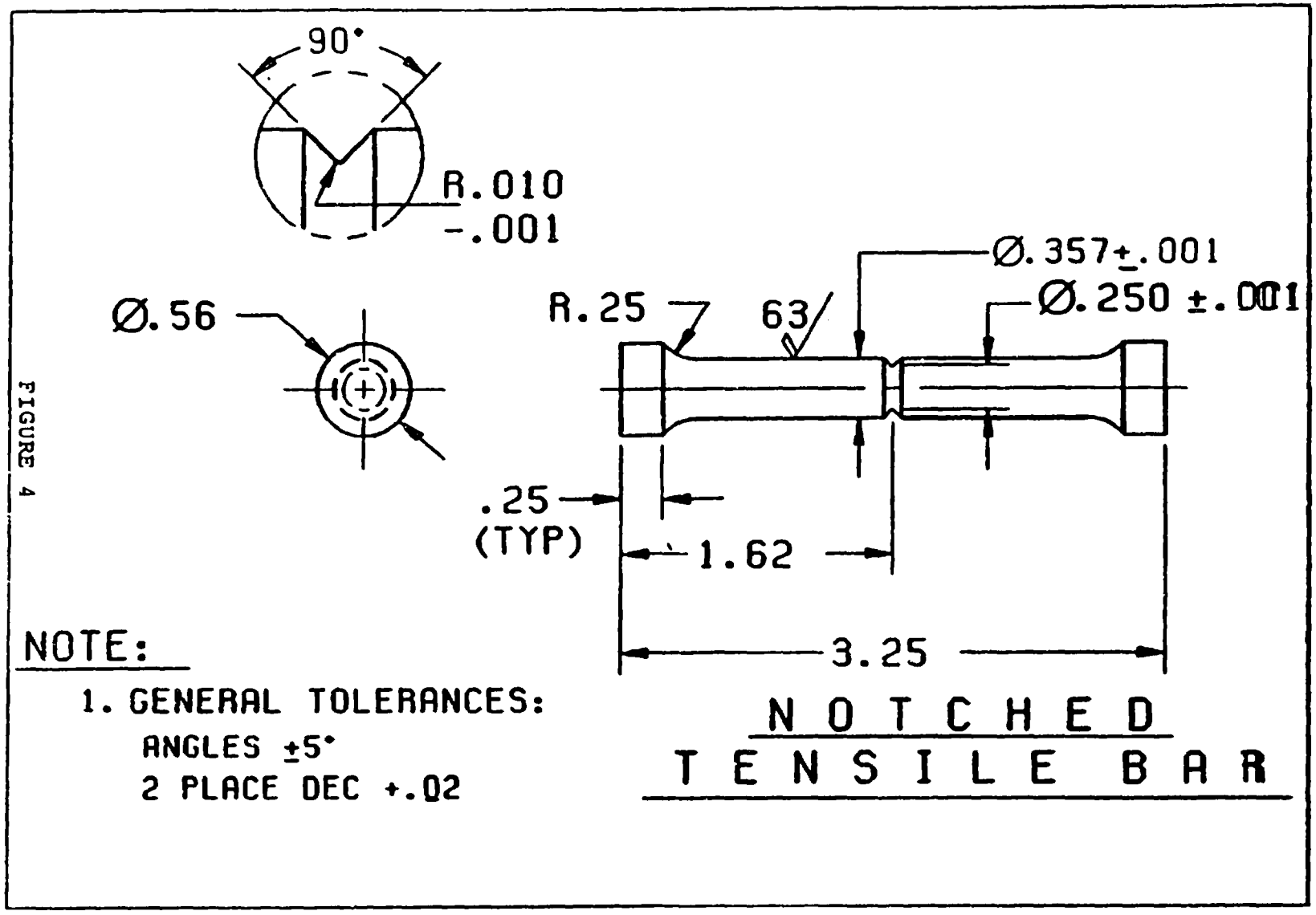
90°
R.010
-.001
Ø.56
R.25
63
Ø.357±.001
Ø.250 ±.001
.25
(TYP)
1.62
3.25
NOTE:
1. GENERAL TOLERANCES:
ANGLES ±5°
2 PLACE DEC +.02
NOTCHED
TENSILE BAR

FIGURE 4

5.3 Electrolytic Charging of Hydrogen

Specimens were first cleaned in acetone and then electrolytically charged with hydrogen. The specimen was connected to a low-voltage DC power supply as the cathode and suspended in a 2-liter bath containing 10% concentrated H_2SO_4 and 0.3g/liter of As_2O_3. The arsenic trioxide is a "poison" which acts to prevent the combination of nascent hydrogen atoms to form the diatomic gas. Surrounding the specimen-cathode was the cylindrical-shaped lead anode, as shown in Figure 5. The temperature of the electrolytic solution was maintained constant and in this case 85F (29.5C) was selected. A current density of 3 mA/in^2 (0.47 mA/cm^2) was utilized. For the grooved tensile bar specimens with a surface area of approximately 4.68 in^2 (3019 mm^2), this amounted to a charging current of 14-15 mA. It was determined that times on the order of 16-24 hours were needed to accumulate sufficient hydrogen to cause embrittlement.

5.4 Cadmium Plating

The purpose of the cadmium plating was to provide a barrier coating which would retard the loss of hydrogen. As a result, the concentration of hydrogen, which is highest at the surface after electrolytic charging, may be made somewhat homogeneous throughout the specimen by means of a subsequent heat treat.

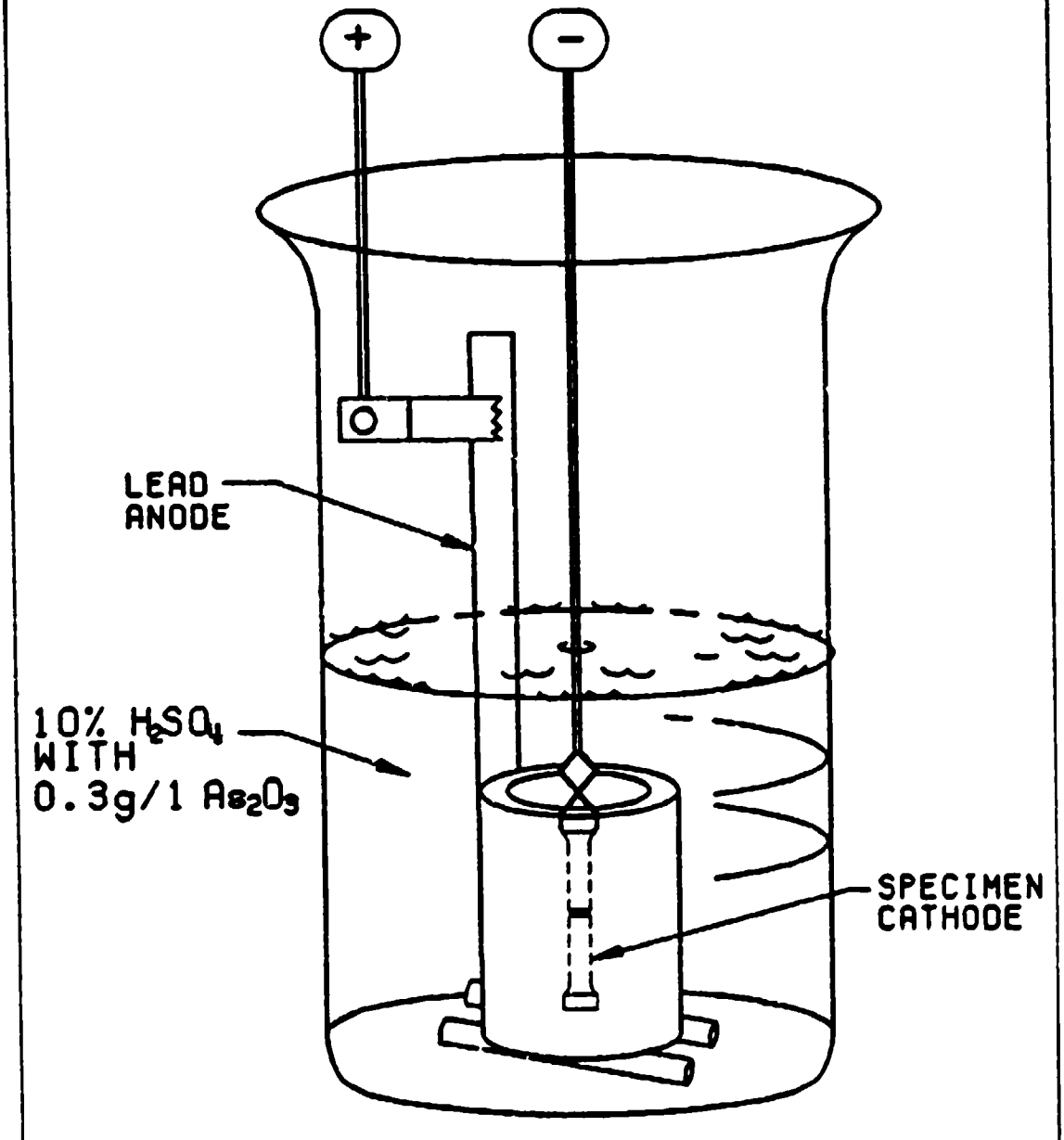

ELECTROLYTIC CHARGING
OF HYDROGEN

FIGURE 5

Therefore, the measured hydrogen concentration which represents an average value in ml/100g will correlate with the actual hydrogen concentration of those specimens undergoing tensile testing. In other words, if the homogenizing heat treatment were not carried out, the hydrogen concentration at the surface of the specimens would be several times greater than that measured by the hydrogen-analysis equipment.

In the cadmium-plating apparatus, the specimen was the cathode and four cadmium spherical-shaped anodes were equally spaced around the anode, as shown in Figure 6. The solution was the standard cadmium plating solution consisting of sodium cyanide 12-18 oz/gal (90-135 g/l) and cadmium oxide 3 oz/gal (23 g/l), sodium hydroxide 1.9 oz/gal (14.2 g/l). Temperature was maintained at 85 to 90F (29.5 to 32C), and current density was 106 mA/in^2 or 16 mA/cm^2. With these tensile bars (4.68 in^2), the charging current was 495 mA. A plating time of 19 min produced a cadmium thickness of 0.00036 inch or 0.36 mil (9 um).

5.5 Homogenizing Heat Treatment

Based on work done in 1905, Einstein developed an easy-to-use relationship involving diffusion distance (X), diffusion coefficient (D) and time (t).[12,13]

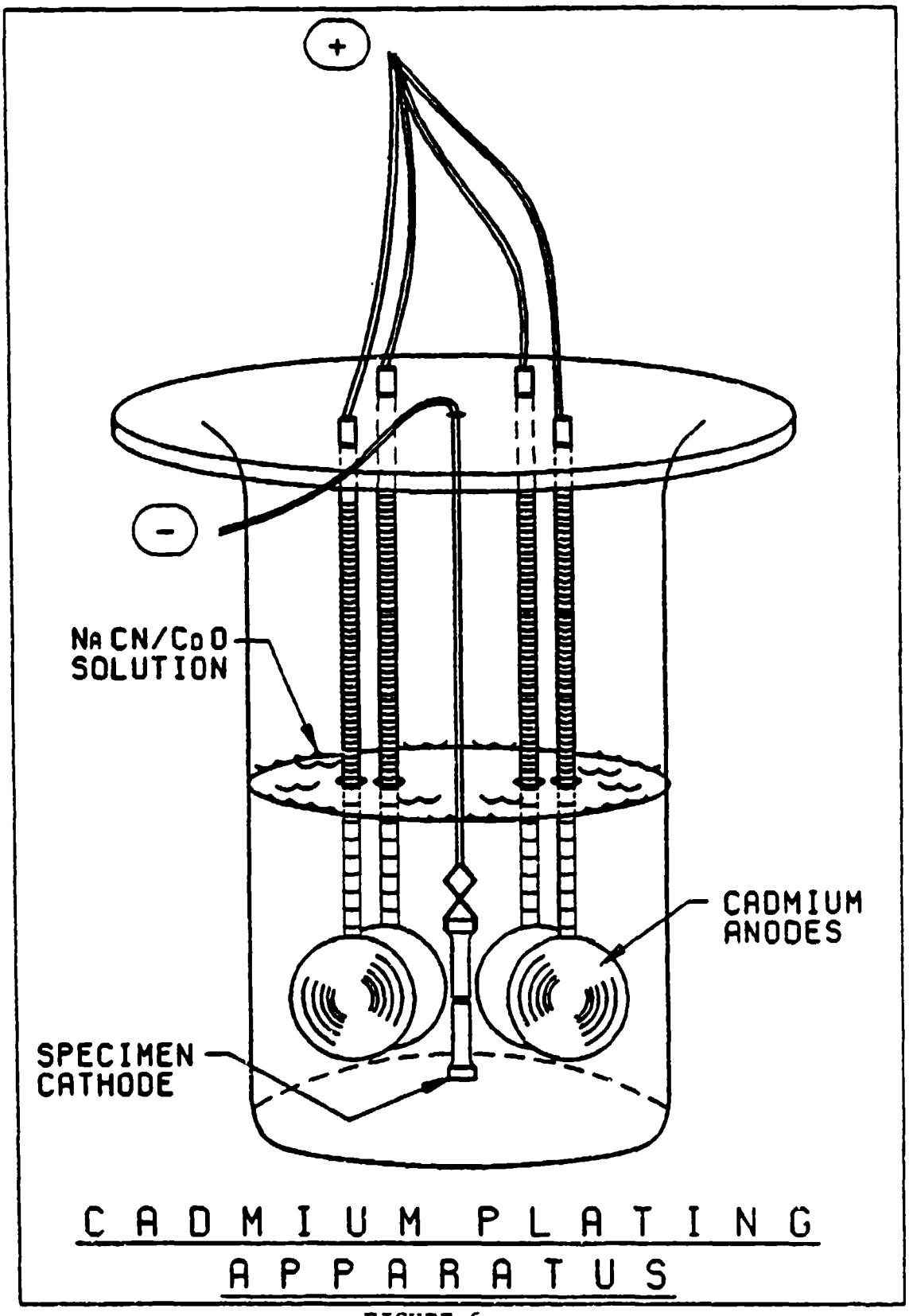
+
-
NaCN/CdO
SOLUTION
CADMIUM
ANODES
SPECIMEN
CATHODE
CADMIUM PLATING
APPARATUS

FIGURE 6

$X^2 = 4(D_T)\ (t)$

Knowing (X) the distance from the surface of the specimen to the center (D_T), the diffusion coefficient for the specific material at a selected temperature (T), the time (t), for this diffusion may be determined. The diffusion coefficient (D_T) is sensitive to temperature; for AISI 4340 grade steel at 150C (302F) D_T determined from Figure C-2 to be equal to $2.45 \times 10^{-5}\ cm^2/sec$

Solving for t

$t = X^2/4D_T$

$t = (\frac{0.357}{2}\ in \times 2.54\ \frac{cm}{in})^2/(4)\ 2.45 \times 10^{-5}\ cm^2/sec$

$t = 2.10 \times 10^3$ sec or 35 minutes

In accordance with these calculations, the cadmium-plated specimens were baked in an oven for 35 minutes at a temperature 300F $\pm$ 10° (149C $\pm$ 6) to homogenize the hydrogen concentration.

5.6 Weighing and Subsequent Testing (Tensile Test or Hydrogen Analysis)

Upon removal from the oven, the specimen was quickly cooled in ice water, air dried, and weighed to determine the amount of electroplated cadmium. The amount deposited was fairly consistent and ranged from 0.22 to 0.26g with the average at 0.24g. This produced a plating thickness of 0.33 mil to 0.39 mil (8 to 10 um).

After plating, the specimen was either immediately tensile tested or placed in a Dewar flask with liquid nitrogen at -320F (-196C) for transportation to the site where hydrogen concentration was measured. The -320F (-196C) temperature essentially stops any diffusion and no hydrogen is lost from the specimen during the transportation delay (30-60 min).

5.7 Notched Tensile Testing

The mechanical properties that are most affected by hydrogen embrittlement are notched tensile strength and measures of ductility (% reduction in area or % elongation).[14] The effects of hydrogen embrittlement are most pronounced at room temperature 25°C (78F) and at very slow strain rates, as shown in Figure 7.[15] In the present case, the crosshead speed of the tensile test equipment 0.005 in/min (0.013 cm/min) was such that it produced a strain rate of 0.00026 min which was close to the crosshead speed of (0.005 cm/min) referenced in Figure 7. A sufficiently slow strain rate is necessary so that there is time for the hydrogen to diffuse to the crack tip. This selection of a slow strain rate is significant, because hydrogen embrittlement is not revealed by high strain rate tests such as the Charpy V-notch impact test.[16] Load and strain were plotted on an X-Y recorder. Strain was directly plotted since a 1-inch extensometer was employed.

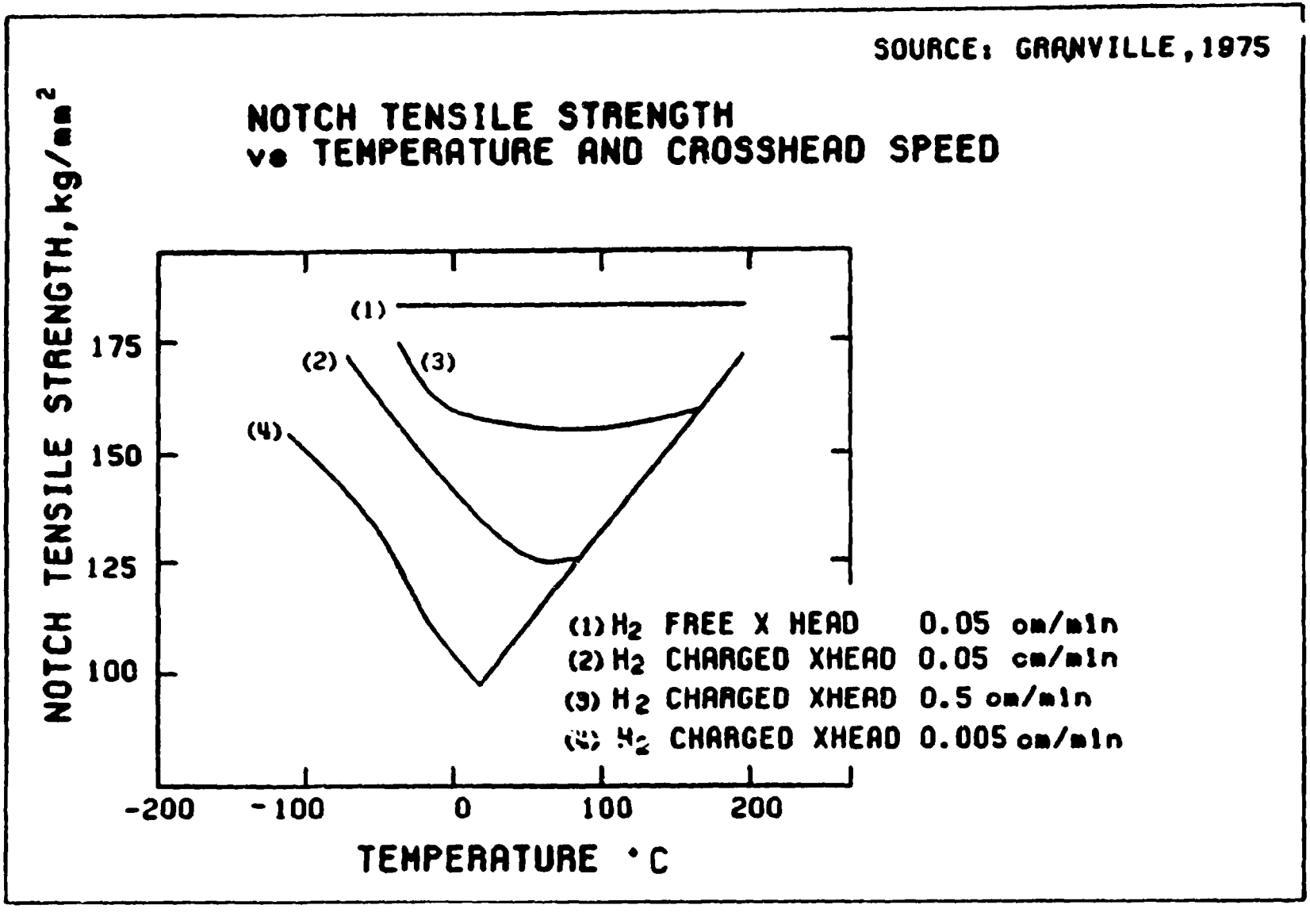
SOURCE: GRANVILLE, 1975
NOTCH TENSILE STRENGTH
vs TEMPERATURE AND CROSSHEAD SPEED
NOTCH TENSILE STRENGTH, kg/mm²
175
150
125
100
-200
-100
0
100
200
TEMPERATURE °C
(1)
(2)
(3)
(4)
(1) H2 FREE X HEAD 0.05 cm/min
(2) H2 CHARGED XHEAD 0.05 cm/min
(3) H2 CHARGED XHEAD 0.5 cm/min
(4) H2 CHARGED XHEAD 0.005 cm/min

FIGURE 7

5.8 Hydrogen Analysis

A LECO microprocessor-controlled hydrogen detector, Model HW-100, (See Figure 8) was used to analyze the concentration of diffusible hydrogen, which may be extracted at 200°C. The specimen is prepared for analysis by the BWRA/IIW, (British Welding Research Association and International Institute of Welding) technique[17] which is a three-step procedure that essentially removes any water vapor or surface contaminants that could contribute to the hydrogen content. The specimen is removed from the liquid nitrogen and immediately washed in ethanol 3-5 seconds, then transferred to anhydrous ethyl ether for 3-5 seconds, dried under a blast of low dew point argon gas for 20-22 seconds and then immediately placed in the detection cell and capped.

Upon starting the analysis, the detection cell is automatically purged of its atmosphere gas and back filled with a carrier gas of nitrogen. The volume of extracted hydrogen is measured and the result accumulated over a predetermined time period; in this case, 18-24 hours was selected to ensure that all hydrogen was detected. The equipment operates on the principle that hydrogen affects the thermal conductivity of the nitrogen carrier gas. This

HYDROGEN DETECTOR

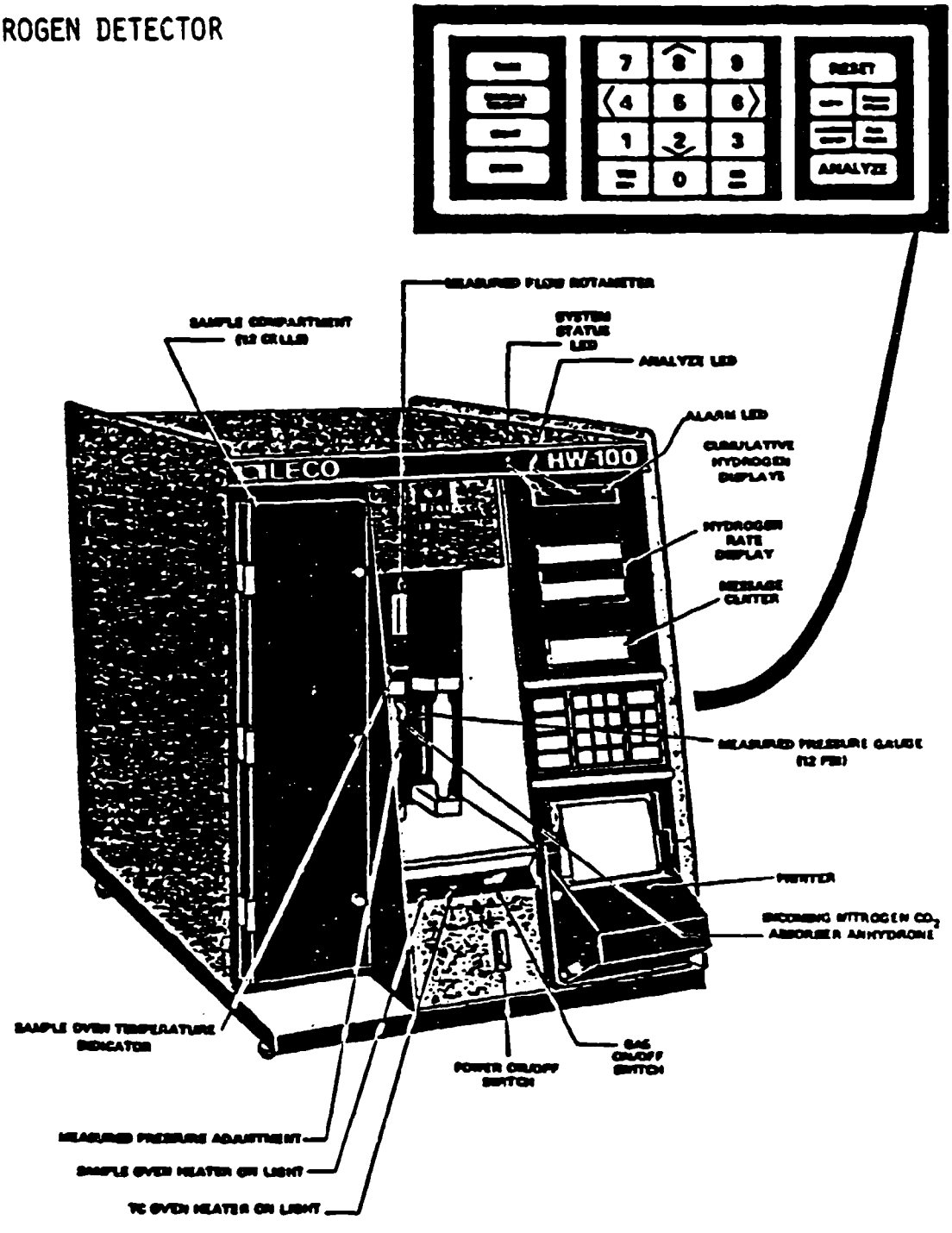

FIGURE 8

equipment is calibrated so that the evolved hydrogen will be measured to the nearest 0.01 ml. When the specimen weight is entered in grams (to the nearest milligram), the printout is read in ml/100 gram.

Prior to daily use, the barometic pressure is entered into the microprocessor memory and the equipment is automatically calibrated using 3 to 5 precisely known volumes of hydrogen gas.

5.9 Higher Temperature (800°C) Hydrogen-Analysis Procedures

First, the diffusible hydrogen in a specimen was measured by using the LECO HW -100 Hydrogen Detector at a temperature of 200C for 23 hours. Then the specimen was transferred to another Hydrogen Detector, a LECO Model HW -200 which analyzes hydrogen at higher temperatures. This was done to determine some of the non-diffusible hydrogen that is trapped or bound by higher energies within the microstructure; this hydrogen may only be extracted at higher temperatures. By measuring this non-diffusible hydrogen, a correlation may be made between diffusible hydrogen collected at 200°C and hydrogen extracted at 800°C.

5.10 Corrosion Testing Procedures

The 2 in x 1/2 in x 1/4 in (5.08 x 1.27 x 0.63 cm) rectangular bars were exposed at room temperature to a 2-liter pickling solution which contained 50% HCl.

Upon completion of the exposure time (1 hour to 70 hours), the specimens were quickly rinsed in water, cleaned of the black carbon smut, and then placed under liquid nitrogen until they could be analyzed for hydrogen (approximately a 1-hour delay). Upon completion of analysis, specimens were weighed to calculate the hydrogen content and to determine weight loss resulting from corrosion.

PART 6

DISCUSSION OF RESULTS

6.1 Notched Tensile Strength and Hydrogen Analysis of Electrolytic Charged Specimens

The Notched Tensile Strength (NTS) of uncharged, unplated specimens was well established by testing five specimens (#1, 3, 5, 6, and 17); excellent consistency with an average of 275.1 Ksi (1,897 MPa) was found, as shown in Table III.

Two control specimens, both uncharged and unplated, (#7 and #33), were analyzed for hydrogen at 200°C for 24 hours; both contained no hydrogen, i.e., 0.00 ml/100g hydrogen.

Two specimens (#35 and #36), cadmium plated without the subsequent homogenizing heat treatment at 300F, (150C) for 35 min, were analyzed for hydrogen and each measured 0.53 ml/100g.

Two specimens (#14, #11) that were cadmium plated and homogenization heat treated, were tensile tested and showed no significant decrease in NTS. Three similarly processed specimens were analyzed for hydrogen and the mean value was 0.10 ml/100g. This shows that an average amount of 0.43 ml/100g was lost due to effusion or outgassing of hydrogen from the cadmium plate during the homogenizing heat treatment.

TABLE III. NOTCHED TENSILE TEST, HYDROGEN ANALYSIS DATA

Spec Num.	Hyd Chg (Hrs)	Cad. Plt.	Homo. Heat Treat	NTS MPa	NTS Ksi	% NTS	Total Hyd ml/100g	Net Hyd ml/100g
#1	0	N	N	1,896	275.0	-		
3	0	N	N	1,868	270.9	-		
5	0	N	N	1,910	277.0	-		
6	0	N	N	1,915	277.8	-		
17	0	N	N	1,896	275.0	-		
7	0	N	N	Control	specimen		0.00	-
33	0	N	N	Control	specimen		0.00	-
	Mean Values			1,897	275.1			
35	0	Y	N				0.53	
36	0	Y	N				0.53	
7	0	Y	Y				0.08	-
10	0	Y	Y				0.12	-
31	0	Y	Y				0.11	-
14	0	Y	Y	13,150	267.9	97.3		
11	0	Y	Y	13,300	270.9	98.5		
					Mean	Value	0.10	-
28	2	Y	Y	-	-	-	0.59	0.49
27	6	Y	Y				1.17	1.07
32	12	Y	Y				1.39	1.29
20	16	Y	Y	13,095	266.8	97.0	-	
23	16	Y	Y	-	-	-	2.32	2.22
25	16	Y	Y	-	-	-	1.71	1.61
38	16	Y	Y	-	-	-	1.72	1.62
37	16	Y	Y	-	-	-	1.45	1.35
39	16	Y	Y				1.39	1.29
					Mean	Value	1.71	1.61
21	18	Y		12,368	252.0	91.6	-	
22	19	Y		11,916	242.7	88.2	-	
2	20	Y		9,181	187.0	68.0		
26	20	Y		10,360	211.0	76.7		
16	20	Y		-	-	-	2.68	2.58
8	24	Y		10,128	206.3	75.0		

Tensile testing was conducted on a 24-hr charged specimen; the notched tensile strength was 75% of the original NTS and the fracture showed embrittlement. With a specimen charged for 16 hrs, the NTS was 97.0% of the original NTS and the fracture did not show embrittlement. Two specimens, with a 20-hour charging time, were tested with the following results: 68.0 and 76.7% of the original NTS and the fractures clearly were embrittled. The results of tensile testing of specimens treated for 18 and 19 hours showed intermediate values. Figure 9 shows the stress-strain plots for the NTS tests conducted on specimens with a variety of hydrogen charging times.

A crosshead speed of 0.005 in/min (0.127 mm/min), produced a strain of 0.0045 in 17 min or a strain rate of 0.00026/min. The plots of the embrittled samples at 20 and 24 hours of charging show no ductility; while for samples with less than 20 hrs of charging, the stress-strain plots show increasing ductility.

Hydrogen analysis was performed on five specimens with a 16-hour hydrogen charging time, which was shown to be the threshold of embrittlement. In other words, after 16 hours of electrolytic charging, specimens were embrittled by the hydrogen. The hydrogen was measured for five specimens which had been charged for 16 hours; and the mean value ($\bar{x}$)

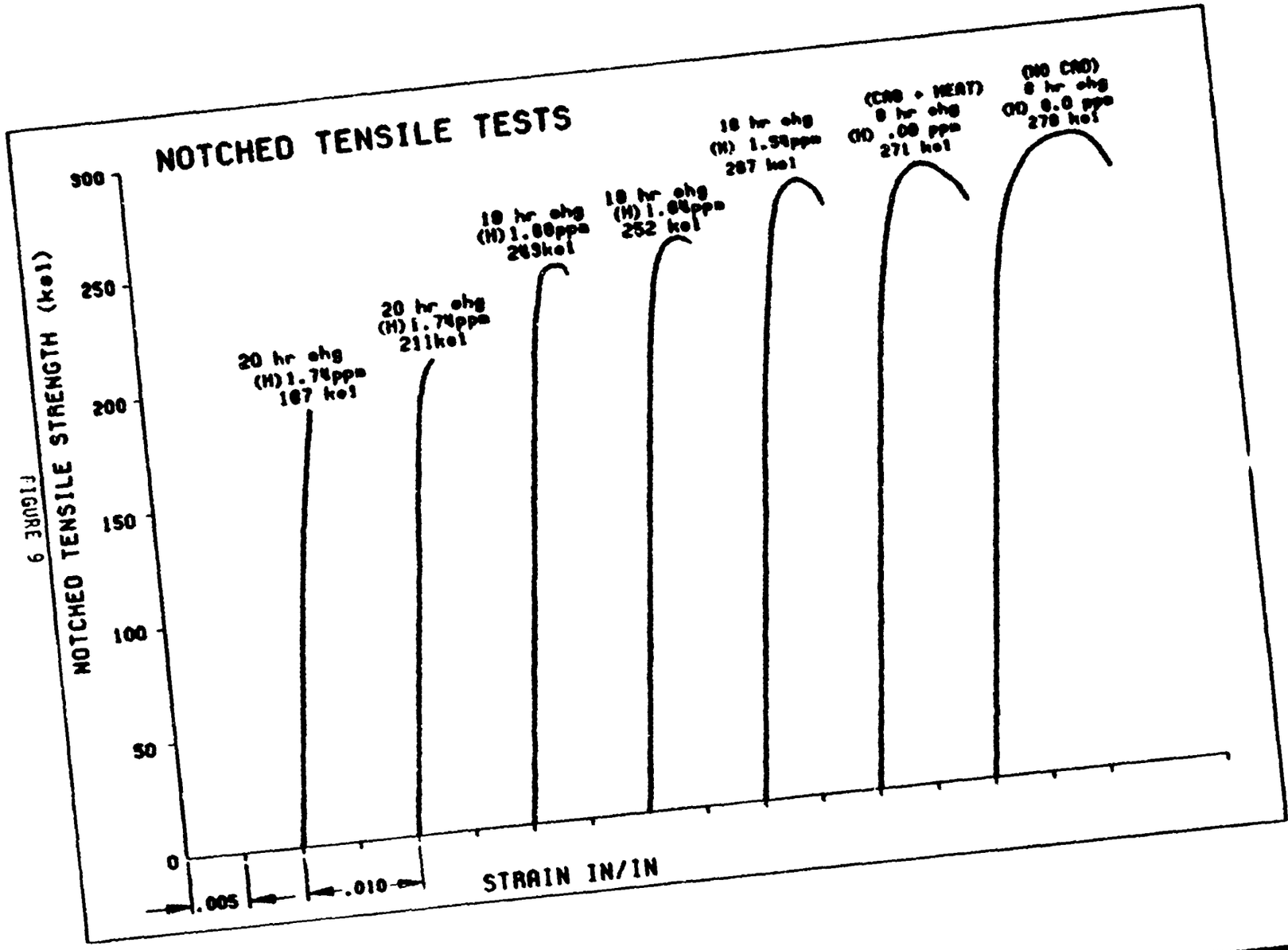
NOTCHED TENSILE TESTS
NOTCHED TENSILE STRENGTH (ksi)
300
250
200
150
100
50
0
20 hr ohg
(H) 1.74ppm
187 ksi
20 hr ohg
(H) 1.74ppm
211ksi
18 hr ohg
(H) 1.88ppm
243ksi
18 hr ohg
(H) 1.88ppm
252 ksi
18 hr ohg
(H) 1.58ppm
287 ksi
(CRO + HEAT)
8 hr ohg
(H) .08 ppm
271 ksi
(NO CRO)
8 hr ohg
(H) 8.0 ppm
278 ksi
.005
.010
STRAIN IN/IN

FIGURE 9

was 1.71 ml/100g, with a standard deviation (s) = 0.37 ml/100g. The standard deviation was calculated by:

$$s = \frac{(\bar{x} - xi)^2}{n-1}^{1/2}$$

6.2 Conversion ml/100g to ppm

The two most widely accepted measures of hydrogen concentration are ml/100g and parts per million (ppm). Parts per million are units similar to percent and the conversion is shown below:

$$\text{Conversion Factor} = \frac{2.016\text{g} \times 10^6 \text{ ppm}}{\text{mole} \times 22.414 \times 10^3 \text{ ml/mole}}$$

$$= 89.94 \frac{\text{g}}{\text{ml}} \text{ ppm or } 0.9 \frac{100\text{g}}{\text{ml}} \text{ ppm}$$

$$\text{Critical ppm} = 1.71 \frac{\text{ml}}{100\text{g}} \times 0.9 \frac{100\text{g}}{\text{ml}} \text{ ppm} = 1.53 \text{ ppm}$$

6.3 Calculation of Hydrogen Generated Compared to the Hydrogen Absorbed by the Steel Specimens

In the electrolytic charging of hydrogen 15 mA was the total current. For 20 hours of charging, this amounts to (0.015 amps) (20 x 60 x 60 sec) = 1080 coulombs.

1080 coulombs/96,500 coulombs/Faraday = 0.011 Faraday

1 Faraday will cause the release of 1 mole of hydrogen or 22,400 cm^3 of hydrogen.

0.011 Faraday will generate 251 cm^3 of hydrogen

In units of $\frac{\text{ml}}{100\text{g}}$ for a 53g sample, the hydrogen

$$\text{evolved} = \frac{251 \text{ ml}}{53\text{g}} = 473 \text{ ml/100g}$$

This is equivalent to 516 ml/100g when corrected to room temperature 25°C. When compared to the actual hydrogen concentration absorbed by the steel of approximately 2 ml/100g, the hydrogen absorbed amounts to 0.4% of the total hydrogen generated. This shows that diffusion is the rate controlling process and that the majority 99.6% of the hydrogen generated is evolved as gas.

6.4 Development of Electrolytic Charging Curve

Additional specimens were analyzed to develop a charging curve, i.e., hydrogen concentration as a function of time. Note in Table III that the amount of hydrogen resulting from electroplating cadmium and subsequent homogenization heat treat amounted to a mean value of 0.10 ml/100g) and this was subtracted from the total hydrogen measured to determine the net hydrogen produced by electrolytic charging.

The data plotted in Figure 10, shows some variability. The theoretical curve is of the form $[H] = C\,(t)^{1/2}$. The constant C was determined to be 0.403 when using the mean value of [H] = 1.61 ml/100g at t = 16 hrs. This theoretical curve was plotted with plus and minus (one standard deviation, 0.37 ml/100g) bands.

6.5 Notched Tensile Strength vs Hydrogen Concentration

Percent of original notch tensile strength was plotted versus hydrogen concentration, as shown in Figure 11. The

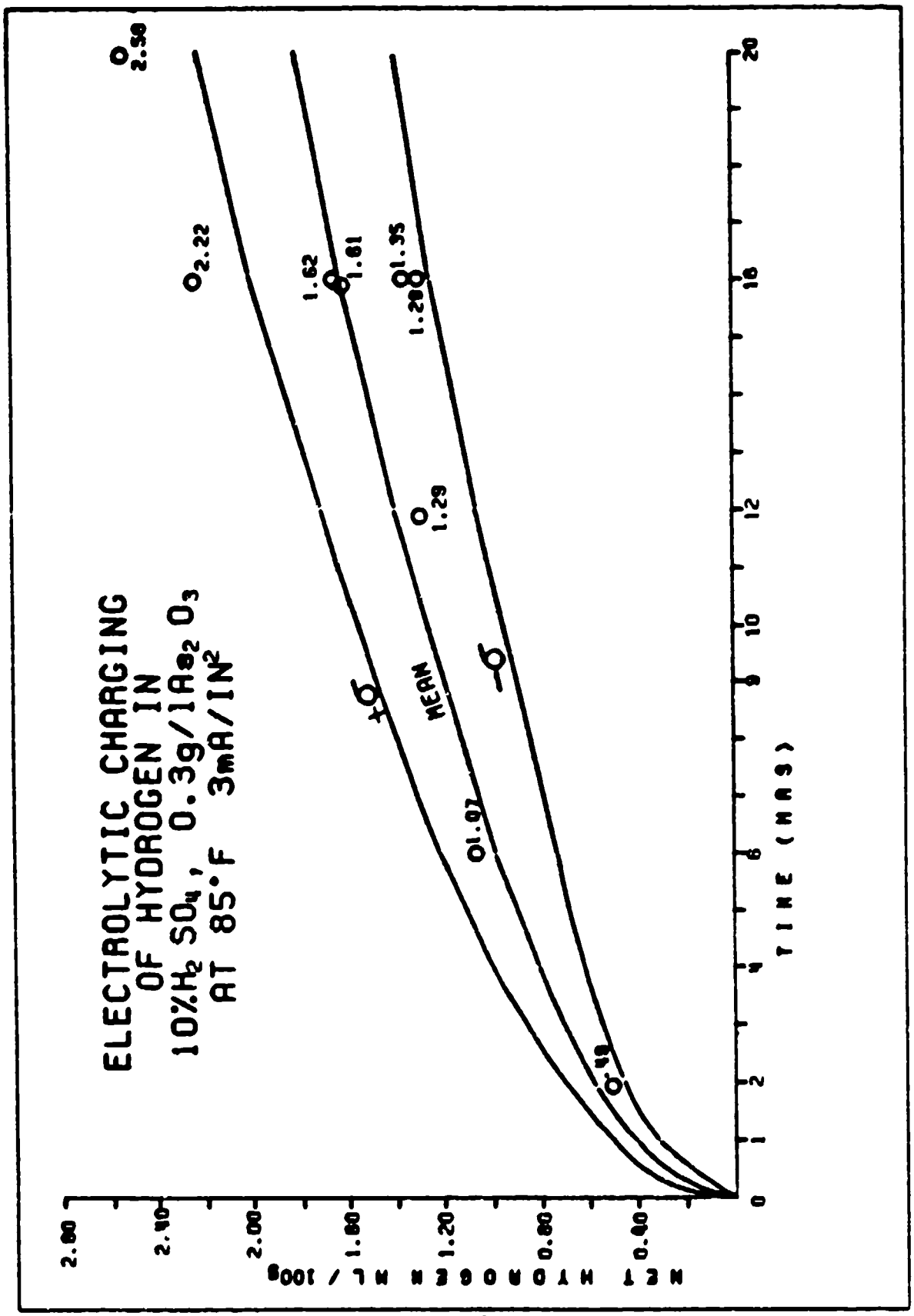
ELECTROLYTIC CHARGING
OF HYDROGEN IN
10%H2 SO4, 0.3g/1As2 O3
AT 85°F 3mA/IN2
MEAN
+σ
-σ
2.58
2.22
1.62
1.61
1.35
1.29
1.29
1.07
0.48
TIME (HRS)
NET HYDROGEN ML / 100g
0
1
2
4
6
8
10
12
16
20
0.40
0.80
1.20
1.60
2.00
2.40
2.80

FIGURE 10

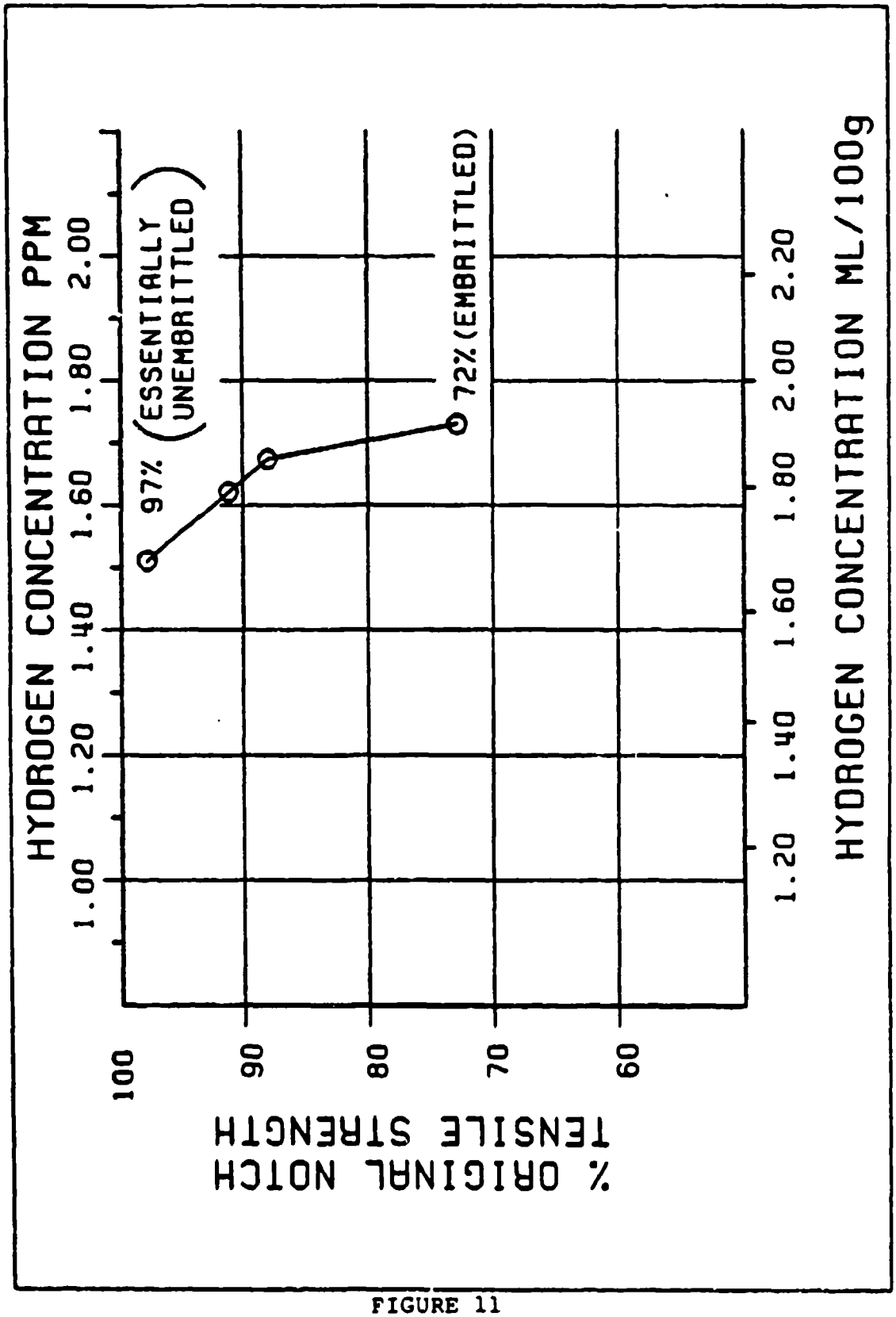
HYDROGEN CONCENTRATION PPM
1.00
1.20
1.40
1.60
1.80
2.00
97% (ESSENTIALLY UNEMBRITTLED)
72% (EMBRITTLED)
% ORIGINAL NOTCH TENSILE STRENGTH
100
90
80
70
60
1.20
1.40
1.60
1.80
2.00
2.20
HYDROGEN CONCENTRATION ML/100g

FIGURE 11

16-hr charged specimen which had 1.53 ppm (1.71 ml/100g) had an NTS 97% of the original and was essentially unembrittled. After this, the curve falls sharply to a 72% NTS which was clearly embrittled after 20 hours of hydrogen charging.

6.6 Scanning Electron-Microscopic Photographs

Scanning electron microscopic (SEM) photographs at 10X were taken of the fractured surface of two specimens:

1. An embrittled specimen, shown in Figure 12, Specimen #8, hydrogen charged for 24 hours and cadmium plated, and
2. An unembrittled or control, Specimen #5, shown in Figure 13. Higher magnification (850X) SEM photograph Figure 14 of the embrittled specimen #8 shows intergranular fracture typical of hydrogen embrittlement.[18,19] A higher magnification 1000X SEM photograph Figure 15 of the unembrittled specimen #5 shows microvoid coalesence typical of ductile fracture.[20]

6.7 Sensitivity Analysis of Electrolytic Charging of Hydrogen

6.7.1 Steps of Electrolytic Charging Mechanism

The electrolytic charging of hydrogen mechanism consists of several steps:

1. Moving the hydrogen ions in solution by electrolytic action to the cathode, the specimen's surface.
2. Diffusion of hydrogen at the cathode surface into the steel. The diffusion process at room temperature is relatively slow and therefore is rate controlling.

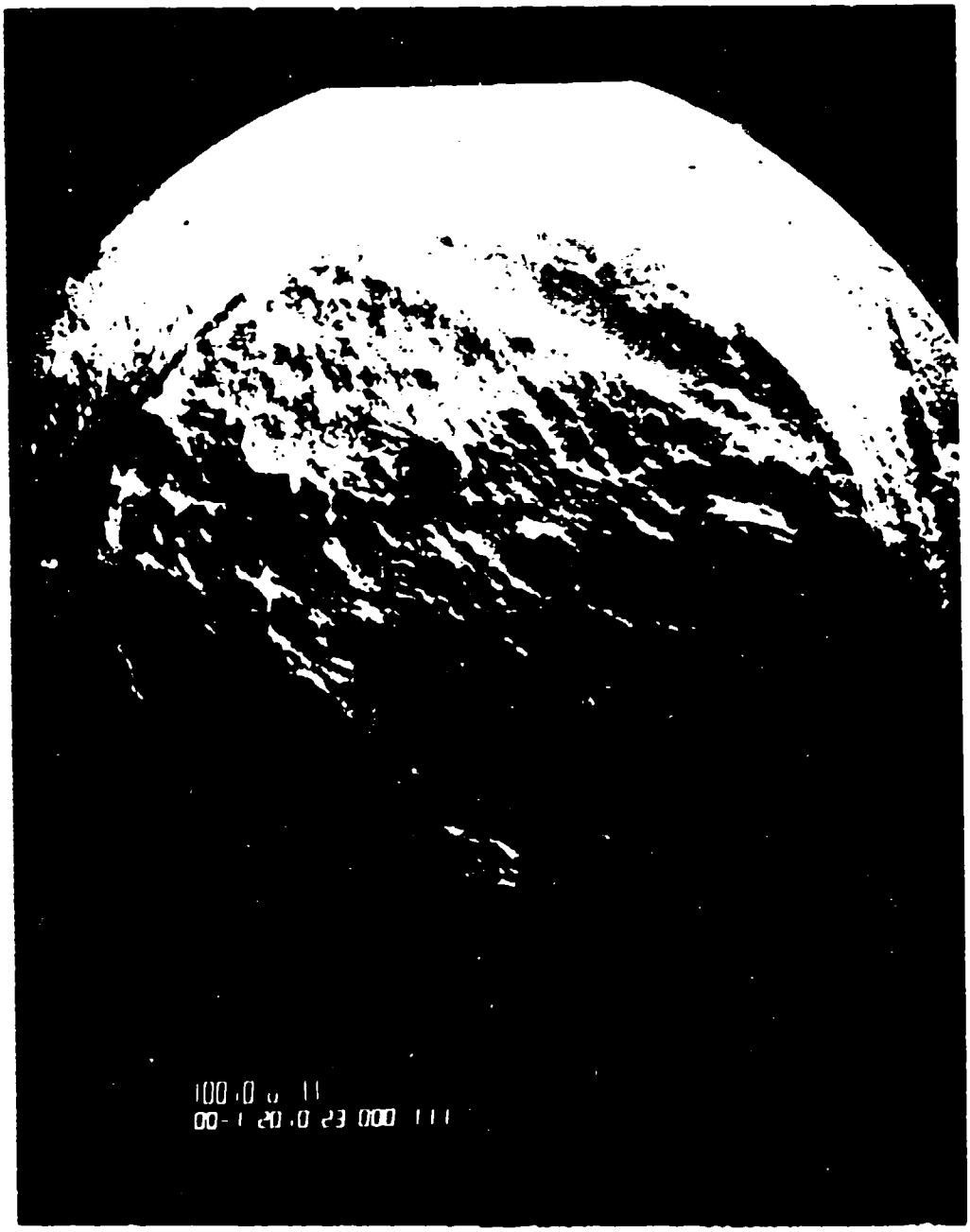

FIGURE 12

FRACTURE SURFACE OF
EMBRITTLED SPECIMEN

10X SPECIMEN #8

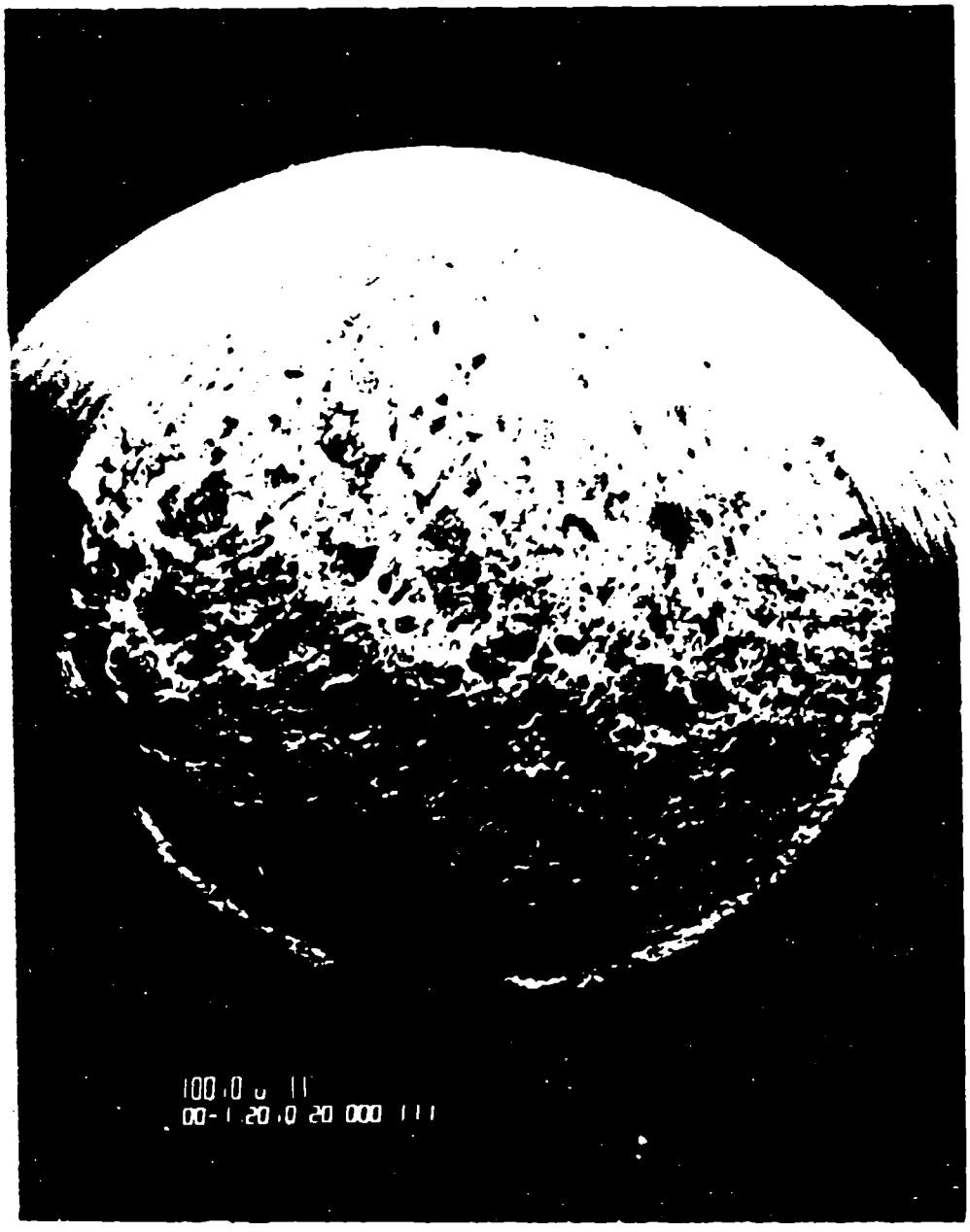

FIGURE 13

FRACTURE SURFACE OF
UNEMBRITTLED SPECIMEN

10X SPECIMEN #5

FIGURE 14

SEM SHOWS INTERGRANULAR FRACTURE

850X SPECIMEN #8 (EMBRITTLED)

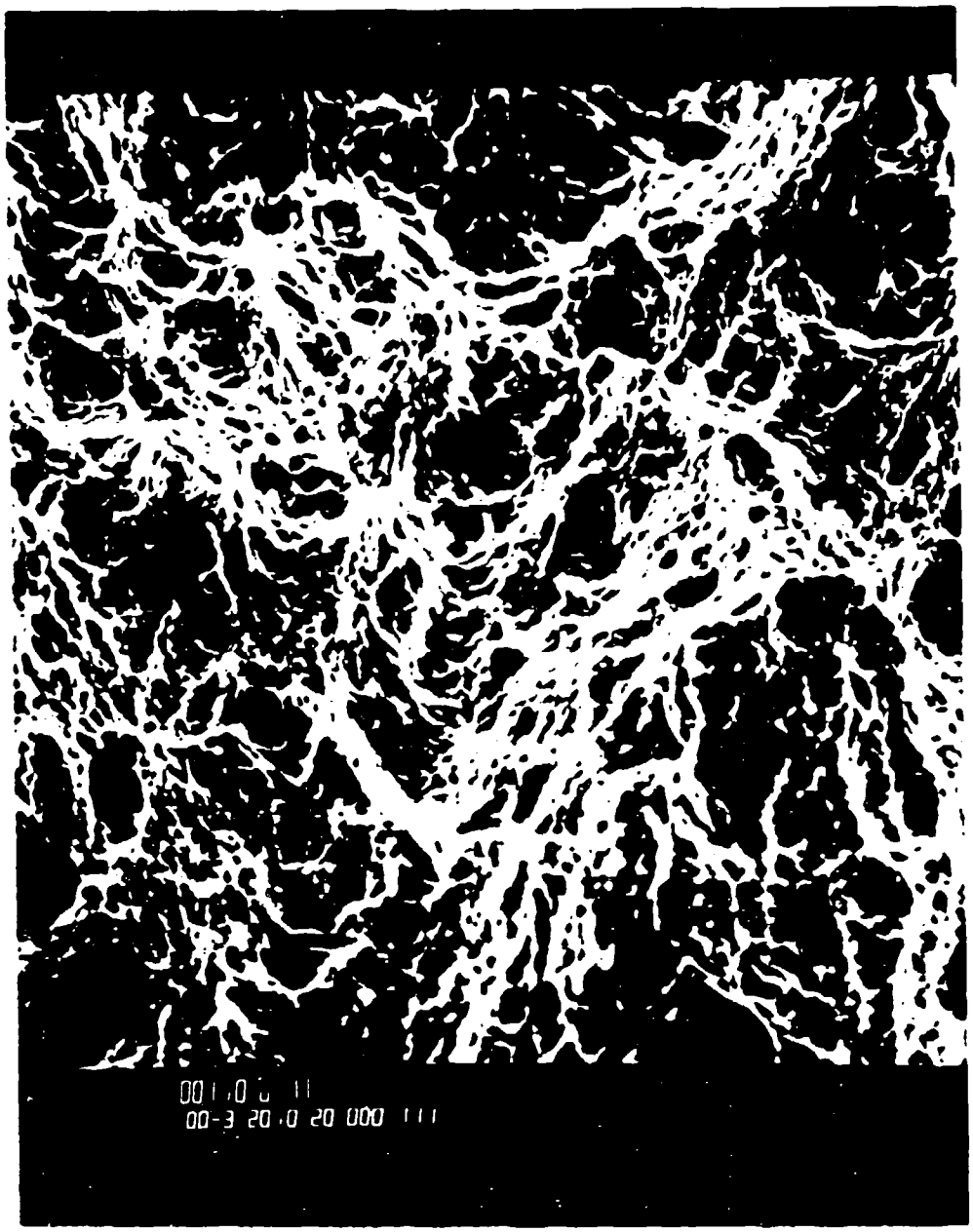

FIGURE 15

SEM SHOWS MICROVOID - COALESCENCE
TYPICAL OF DUCTILE FRACTURE

1000X SPECIMEN #5 (UNEMBRITTLED)

6.7.2 Variables in the Electrolytic Charging of Hydrogen

The variables in the electrolytic charging of hydrogen which affect the diffusion of hydrogen into the specimen are:

1. Temperatures of acid solution
2. Type of steel or material
3. Time duration of process
4. State of stress of material

6.7.3 Effect of Temperature of Acid Solution

As the temperature is varied the effect on the Diffusivity can be calculated, and consequently, the effect on the concentration of hydrogen C (x) at a selected distance (x) into the steel can be calculated. The distance (x) was selected to be (0.1cm) and $C_{(x)}$ is calculated as follows:

$$C_{(x)} = Co \text{ erfc } \frac{x}{2\ (Dt)^{1/2}}$$ Reference: 21, 22

C_o is assumed constant at the surface (x=o)
t is the time

D is the Diffusivity or Diffusion Coefficient and varies with temperature and type of material

For this material AISI grade 4340, D varies with temperature as follows: (from Figure 18)

Temp	D
20°C	2.0×10^{-7} cm^2/sec
25°C	2.5×10^{-7} cm^2/sec
40°C	6.0×10^{-7} cm^2/sec

Calculation at 20°C, time (t) = 16 hr (57,600 sec)

$$C_{(x)} = C_o \text{ erfc } \frac{0.1 \text{ cm}}{2\ (2 \times 10^{-7} \text{ cm}^2/\text{sec} \times 5.76 \times 10^4 \text{ sec})^{1/2}}$$

$C_{(x)} = C_o \text{ erfc } (.4658)$

$C_{(x)}$ at 20°C = 0.5103 Co

Calculation at 25°C, time (t) = 57,600 sec

$$C_{(x)} = Co \text{ erfc } \frac{0.1 \text{ cm}}{2 \ (2.5 \times 10^{-7} \times 5.76 \times 10^4)^{1/2}}$$

$C_{(x)} = Co \ (.4158)$

$C_{(x)}$ at 25°C = 0.5567 Co

So by increasing temp 5°C, the concentration increases by 0.5567/0.5103 = 1.09 or approximately a 10% increase.

Calculation at 40°C

$$C_{(x)} = C_o \text{ erfc } \frac{0.1\text{cm}}{2 \ (6 \times 10^{-7} \times 5.76 \times 10^4)^{1/2}}$$

$C_x = C_o \text{ erfc } (0.2689)$

$C_x = 0.7059 \ C_o$

An increase of 20°C from 20°C to 40°C gives an increase in hydrogen concentration of 0.7059/0.5103 or 138% at a depth of 0.1 cm.

6.7.4 Type of Material

The type of material, grade of steel, and its associated heat treatment determines the material properties; which includes the diffusivity. There is also variation from specimen to specimen due to the inherent variation in microstructure which will bring about differences in readings of accumulated hydrogen. This factor is not controllable.

6.7.5 Effect of Hydrogen Charging Time

The time of the process is well controlled. The maximum time error would be 5 seconds, which would not significantly affect the concentration of hydrogen.

6.7.6 State of Stress

In addition to the concentration gradient of hydrogen being a driving force in the diffusion of hydrogen, a stress gradient within the material is also a driving force; i.e., hydrogen will diffuse to a region of locally increased triaxial stress.[23] Stress consists of applied and residual stress. There was no applied stress during the hydrogen analysis. Since the specimens were manufactured and machined by the same process, any residual stresses imparted should be similar and therefore this variable was not considered.

6.8 Results of Corrosion Testing

The 2" x 1/2" x 1/4", (51mm x 13mm x 6mm) rectangular specimens were exposed to a 2-liter pickling solution, 50% HCl at room temperature. The hydrochloric acid attacks the iron in the steel with the following reaction.

$$2\ Fe + 6\ HCl \longrightarrow 2\ FeCl_3 + 3H_2\uparrow$$

Hydrogen gas is evolved and the solution turns a yellow green color due to ferric chloride. There is a competing physical reaction; due to a relative high concentration of hydrogen atoms at the surface of the steel, atomic hydrogen will

diffuse inward versus hydrogen atoms combining to form the gas. The results are shown on Table IV.

Table IV. CORROSION DATA

Spec #	Time (hr)	Hydrogen (ml/100g)	End Weight(g)	Weight Loss(g)	% Wt. Loss	Temp °C
#8	1.08	0.13	32.381	0.020	0.06	Rm temp
#7	4.00	0.23	32.089	0.057	0.17	Rm temp
#15	6.00	0.27	30.291	0.090	0.29	28-23
#7A	6.00	0.24	31.387	0.090	0.29	28-23
#8A	19.00	0.40	31.880	---	---	28-22
#13	25.00	0.63	30.386	0.560	1.84	28-23
#6	25.00	0.67	30.547	0.685	2.19	28-23
#3	70.00	1.39	27.777	1.877	---	21
#7B	70.00	1.35	29.409	1.959	6.25	21

Weight loss in grams and percent weight loss are plotted against time on Figure 16. The plotted data show a good fit to a linear relationship.

The results, hydrogen concentration vs. process time, are plotted on Figure 17.

The actual data approximate a parabola and are compared to the theoretical diffusion curve which is based on $[H] = C (t)^{1/2}$. Using the time (t) at 70 hours, and [H] at 1.37 ml/100g, the constant C, was determined to be 0.164. Using this relationship, the threshold or critical concentration of 1.71 ml/100g determined in the previous section would be reached at 109 hours of exposure to this pickling solution at room temperature. Under these conditions, the % weight loss would be quite high, approximately 8 %.

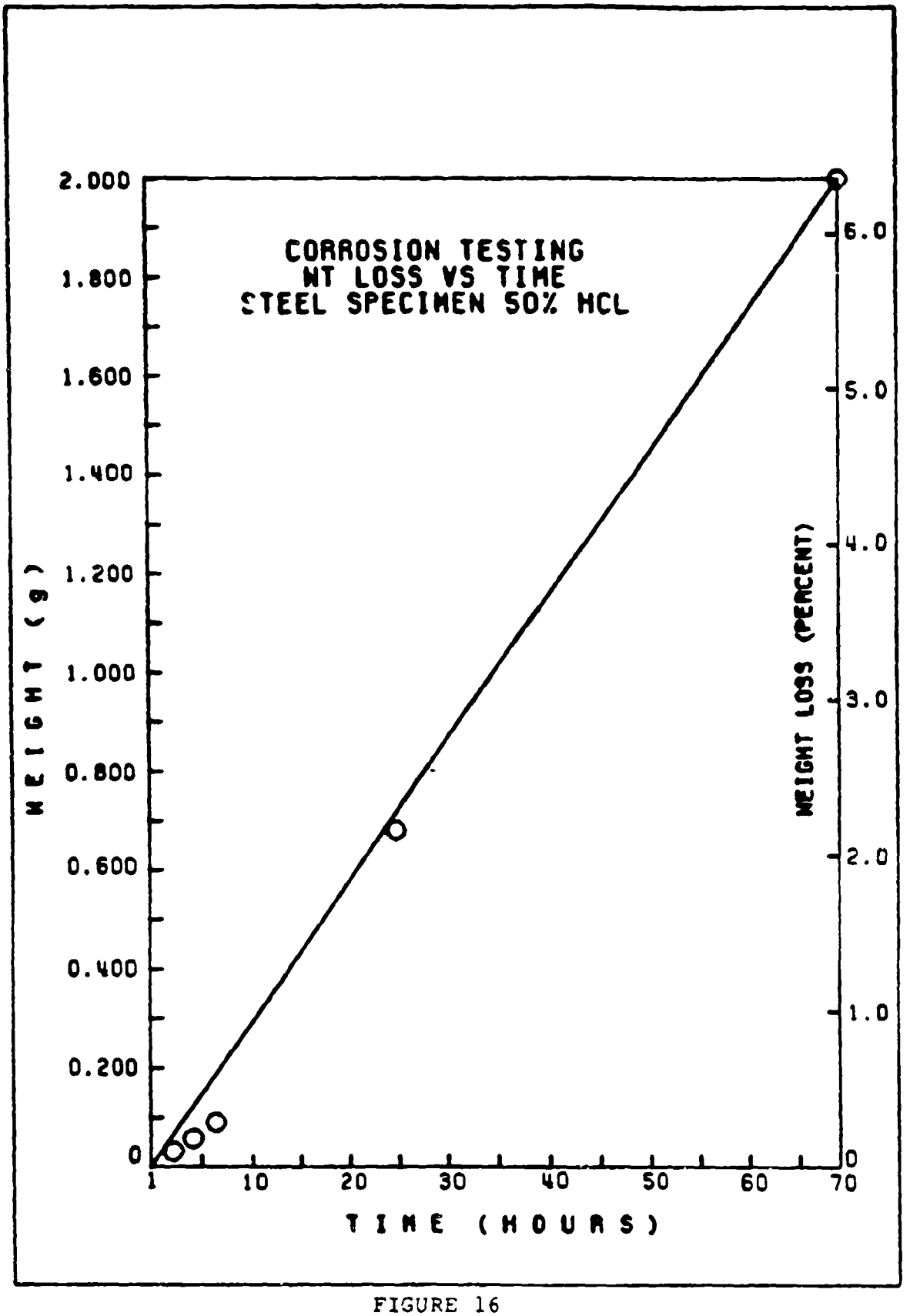
CORROSION TESTING
WT LOSS VS TIME
STEEL SPECIMEN 50% HCL
WEIGHT (g)
2.000
1.800
1.600
1.400
1.200
1.000
0.800
0.600
0.400
0.200
0
WEIGHT LOSS (PERCENT)
6.0
5.0
4.0
3.0
2.0
1.0
0
1
10
20
30
40
50
60
70
TIME (HOURS)

FIGURE 16

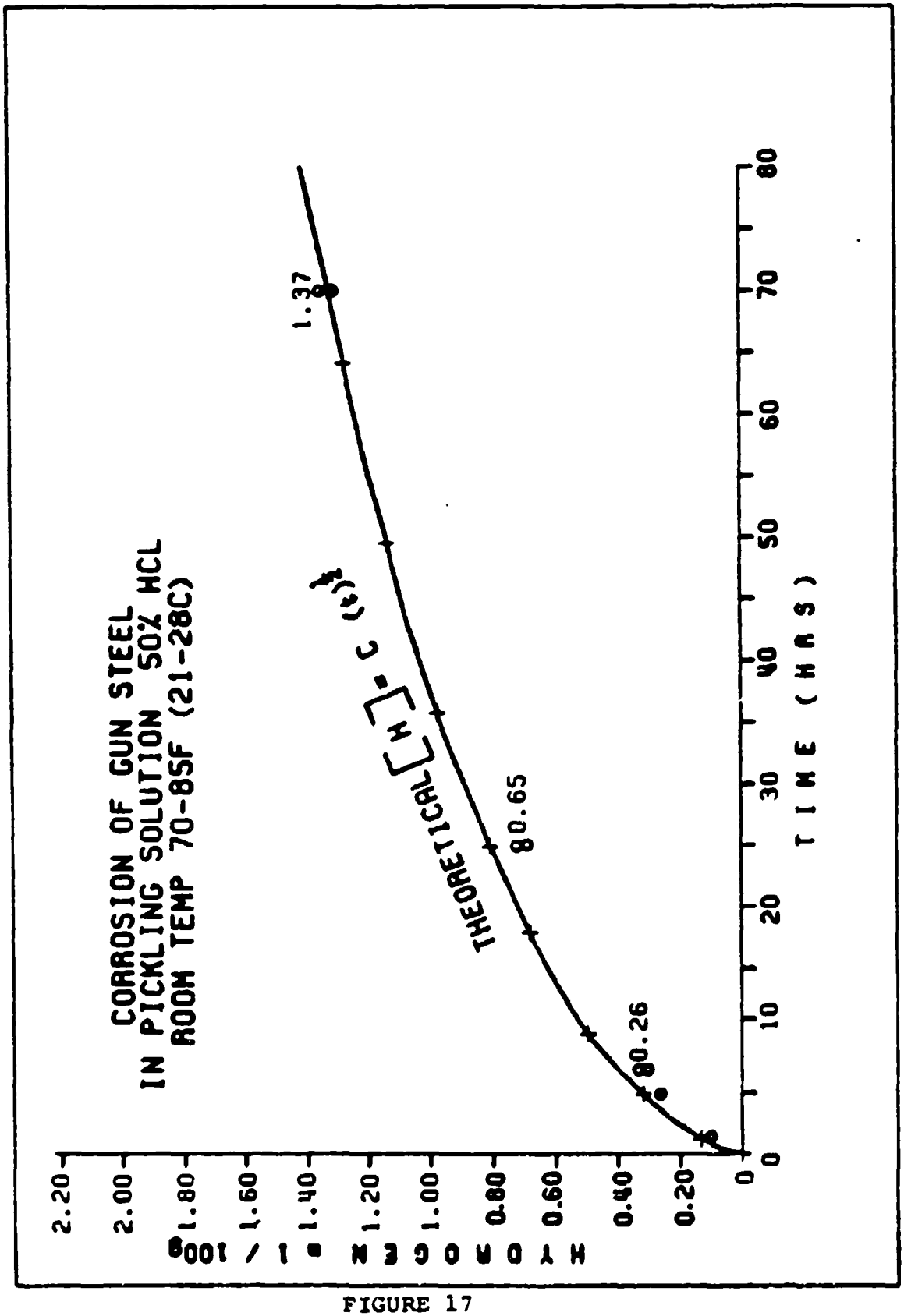
CORROSION OF GUN STEEL
IN PICKLING SOLUTION 50% HCL
ROOM TEMP 70-85F (21-28C)
THEORETICAL
1.37
0.65
0.26
HYDROGEN = 1 / 100g
TIME (HRS)
0
0.20
0.40
0.60
0.80
1.00
1.20
1.40
1.60
1.80
2.00
2.20
10
20
30
40
50
60
70
80

FIGURE 17

6.9 Results; Diffusion Gradients

The diffusion of atomic hydrogen into steel at a temperature, T, may be theoretically described by the following relationship:

$$\frac{Cx - Co}{Cs - Co} = \text{erfc} \frac{x}{2 \ (Dt)^{1/2}}$$ R~ference [23]

C_o = concentration of hydrogen initially, in this case = 0

Cs = concentration of hydrogen at the surface

C_x = concentration of hydrogen, a distance x (in cm) into the steel specimen

D = Diffusivity for the steel at temperature, T, in cm^2/sec

t = time in seconds

erfc is the complement error function, a mathematical function that can be found in standard tables in the same way as sines and cosines.

6.9.1 Diffusion Coefficient

The Diffusion Coefficient or Diffusivity for hydrogen in AISI 4340 steel (similar to the gun steel in our study) is shown on Figure 18 as determined by Beck, Bockris, McBreen, and Nanis.[24] The Diffusion Coefficient is sensitive to temperature and follows the Arhennius relationship

$D = Do \exp^{[-Q/RT]}$

Do, a constant determined to be 1.49 cm^2/sec

Q, activation energy for diffusion = 9200 cal/mole for AISI 4340 with UTS of 260 KSI

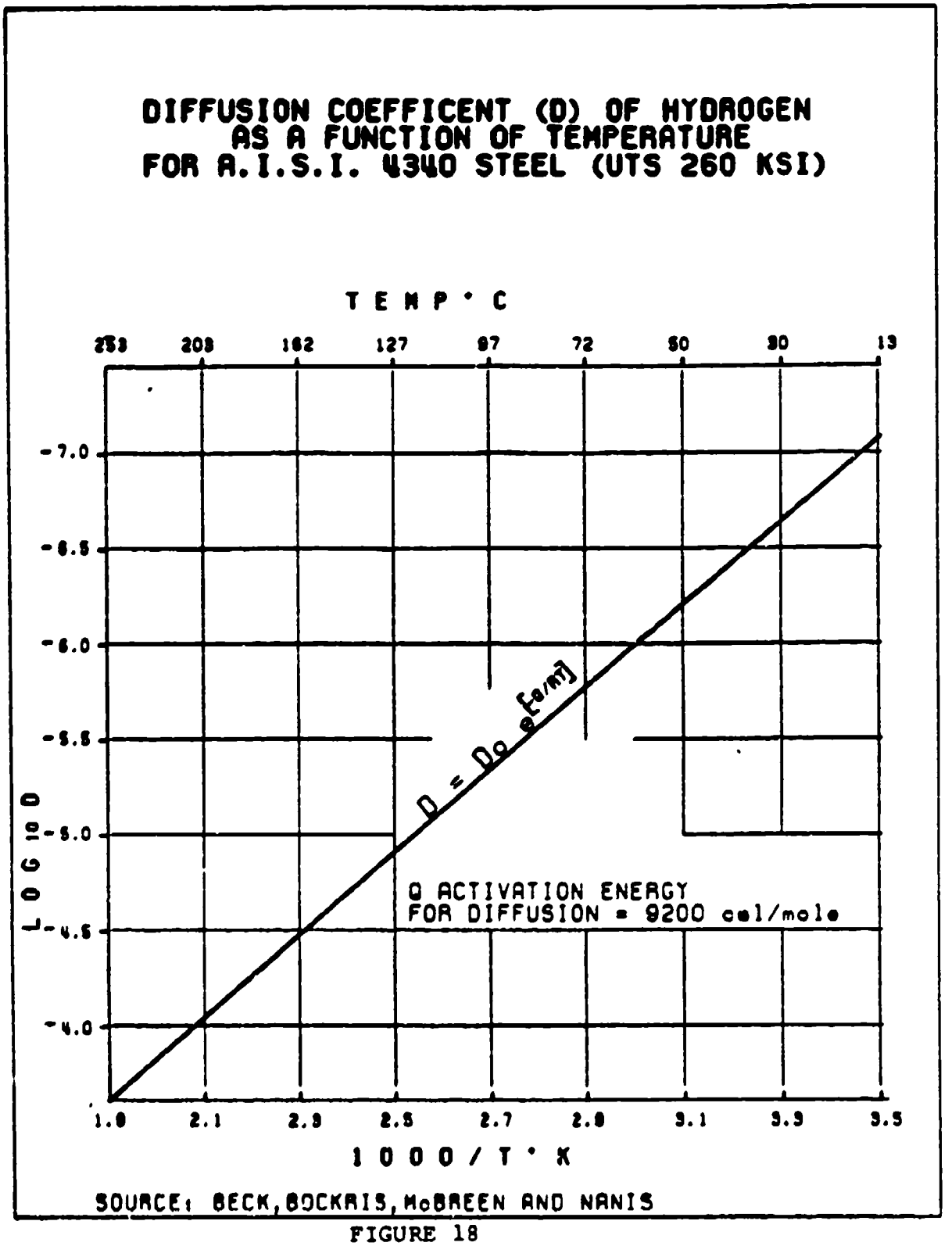
DIFFUSION COEFFICENT (D) OF HYDROGEN
AS A FUNCTION OF TEMPERATURE
FOR A.I.S.I. 4340 STEEL (UTS 260 KSI)
TEMP °C
253
208
162
127
97
72
50
30
13
-7.0
-6.5
-6.0
-5.5
-5.0
-4.5
-4.0
LOG10 D
D = Do e[-Q/RT]
Q ACTIVATION ENERGY
FOR DIFFUSION = 9200 cal/mole
1.8
2.1
2.3
2.5
2.7
2.9
3.1
3.3
3.5
1000/T °K
SOURCE: BECK, BOCKRIS, McBREEN AND NANIS

FIGURE 18

R, gas constant = 1.987 cal/mole°K

T absolute temperature (°Kelvin)

Note the slope of this plot is $\left(\frac{-Q}{R}\right)$

The plot of these data was replotted on a well-known chart of hydrogen diffusivity by Frank Coe [25] (Figure 19), and this plotted in the middle of the ferritic material zone which showed excellent correlation with the data determined by Beck et al.

6.9.2 Typical Diffusion Gradients Across Specimen

See Figure 20 for a plot of the typical diffusion gradients across the cross section of a 0.387-inch (0.983-cm) diameter tensile bar specimen. After 1 hour of electrolytic hydrogen charging, at room temperature 80F, (27C) Curve d_1 describes the diffusion gradient. The penetration into the specimen may be determined by the above equation. Setting $C_x = 0$, x is calculated to be 0.18 cm, however, because of the asymptotic shape of the gradient curve, the hydrogen concentration is essentially zero at x = 0.12 cm.

DIFFUSION COEFFICIENT (D) OF HYDROGEN
SOURCE: F. COE

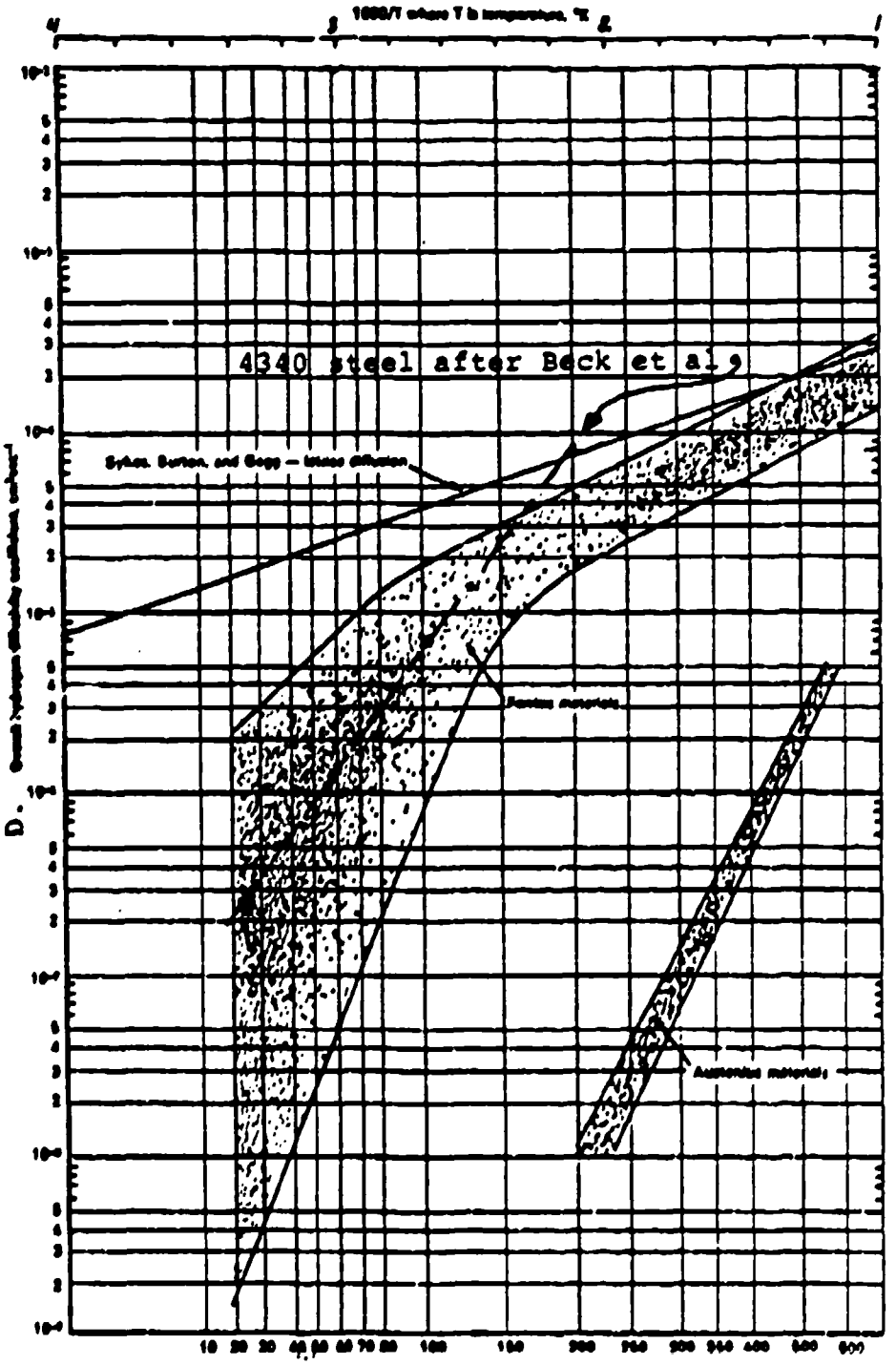

FIGURE 19

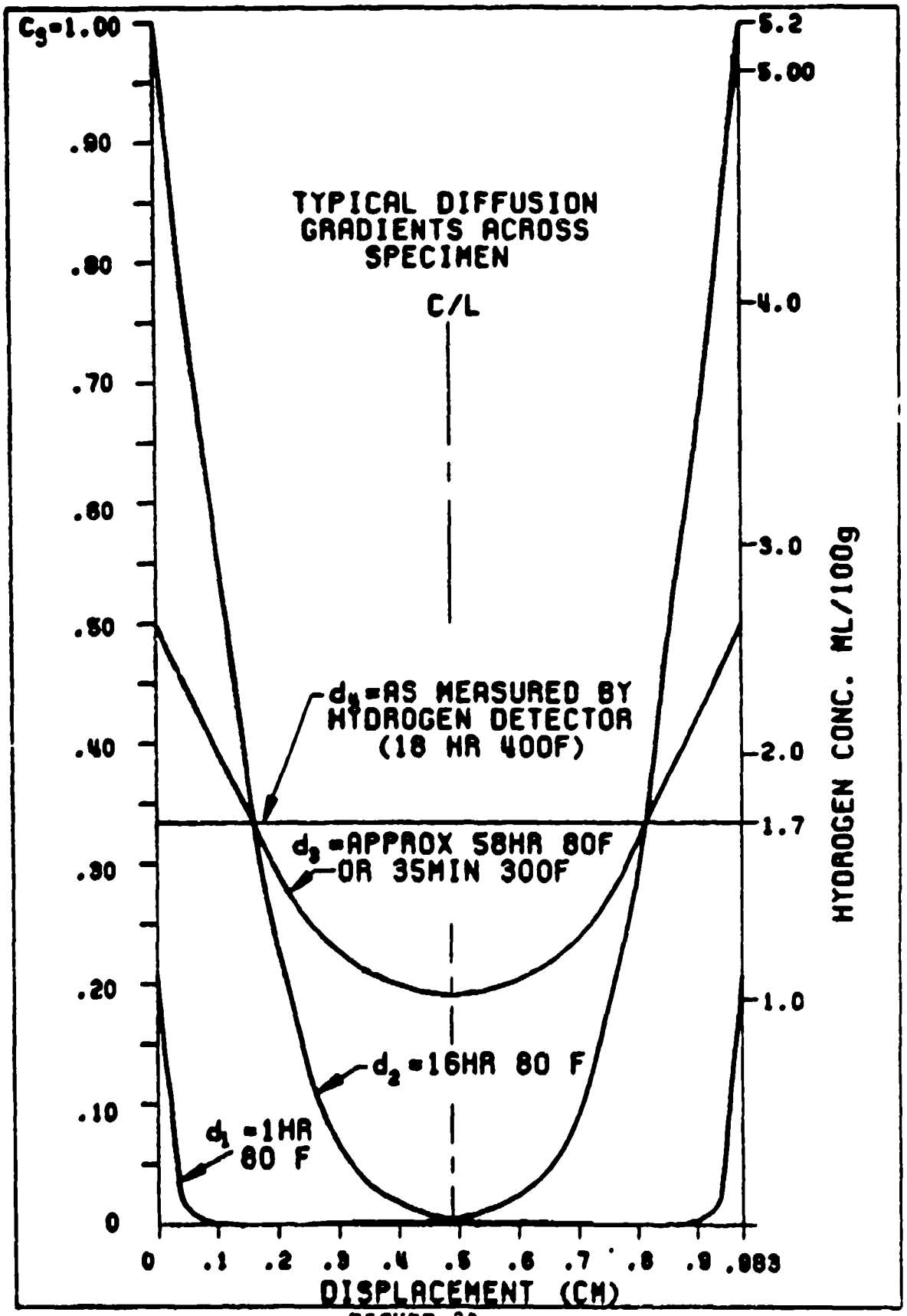
C_s=1.00
.90
.80
.70
.60
.50
.40
.30
.20
.10
0
5.2
5.00
4.0
3.0
2.0
1.7
1.0
HYDROGEN CONC. ML/100g
TYPICAL DIFFUSION GRADIENTS ACROSS SPECIMEN
C/L
d_4 =AS MEASURED BY HYDROGEN DETECTOR (18 HR 400F)
d_3 =APPROX 58HR 80F OR 35MIN 300F
d_2 =16HR 80 F
d_1 =1HR 80 F
0 .1 .2 .3 .4 .5 .6 .7 .8 .9 .983
DISPLACEMENT (CM)

FIGURE 20

At 16 hours of electrolytic hydrogen charging at 80°F (27C°), the gradient is d_2. The hydrogen concentration at the center of the specimen (0.49cm) was calculated, Cx = 0.005 Cs. Naturally, an identical gradient also exists from the other surface as shown in the cross section. Measuring the area under both gradients and dividing by the width or diameter establishes the scale of the ordinate which is equal to the measured hydrogen concentration of 1.71 ml/100g. As described earlier, this hydrogen concentration is extracted by heating the specimen to 200°C (400F) until hydrogen no longer effuses. This occurred at 18 hours of extraction time. In other words, the area under d_4 (1.71 ml/100g x 0.983cm) is equal to the area under both d_2 gradients. The peak concentration at the surface is then calculated to be 5.2 ml/100g or 4. ppm.

When after hydrogen charging and plating, a sample is subjected to a homogenization heat treatment of 300°F (150°C) at 35 minutes, the hydrogen diffuses inward and outward (outgassing) and a gradient of the shape d_3 results. This gradient, d_3, is an approximation since the concentrations at the surface and centerline are estimates. Calculations for this gradient are more complex. The intent, however, is to show the relative shape of the curve after the homogenizing heat treat of 300F (149C). The surface concentration decreases due to diffusion in and out, while the center concentration increases. Incidentally, the

same effect or gradient d_3 could be obtained by a temperature-time combination of 80F (27C) and 58 hours.

6.10 Results, Higher Temperature (800°C) Hydrogen Analysis

The specimens were "as received", not charged with hydrogen or cadmium plated. The data are shown in Table V below:

Table V. Hydrogen Analysis at Higher Temperature

Specimen	Equipment	Duration	Temp	Hydrogen ml/100g
#40	HW-100	23 hours	200°C	0.00
	HW-200	1400 sec	800°C	0.17
	HW-200	1400 sec	800°C	0.03
			Total	0.20
#41	HW-100	23 hours	200°C	0.00
	HW-200	1400 sec	800°C	0.18
	HW-200	1400 sec	800°C	0.00
			Total	0.18
#33	HW-100	23 hours	200°C	0.00
	HW-200	1400 sec	800°C	0.14
	HW-200	1400 sec	800°C	0.03
			Total	0.17
			Mean Value	0.18

There was no diffusible hydrogen detected (hydrogen measured at 200°C).[26] Upon heating to higher temperature, 800°C, there was sufficient energy to break the interaction or bonding of some of the "residual" hydrogen to various defects "traps" within the microstructure. A mean value of 0.18 ml/100g (0.16 ppm) was measured. An elevated temperature of 800°C was used since it was near the maximum

limit of the equipment. Since the time of 1400 seconds (23.3 minutes) is the maximum analysis time of the equipment, an additional or "coupled" 1400-second analysis was immediately performed on the specimen. It would have been more desirable to conduct an analysis at the fusion point (approximately 1500°C) and compare the results, since many hydrogen analyses conducted by steel-makers are performed at the fusion point. However, this analysis did show that at higher temperatures non-diffusible or residual hydrogen may be extracted and that temperature is important when specifying hydrogen analyses.

PART 7

CONCLUSIONS

Introduction to Conclusions

The critical concentration of hydrogen (in ml/100g and ppm) at which gun steel is embrittled was determined by notched tensile testing and subsequent hydrogen analysis. Hydrogen was charged into specimens by electrolysis and by corrosion in 50% hydrochloric acid. Notched tensile testing with sufficiently slow strain rates (less than 0.05/min) was found to be an excellent, discriminating test for hydrogen embrittlement. As mentioned in the introduction, processes may be ranked according to the susceptibility of the steel for hydrogen entry. Although not addressed in this study, it is well known that welding and melting of steel are processes in which the steel may be the most susceptible to hydrogen entry. In the electroplating processes such as with cadmium or chromium, hydrogen is deposited with the plate and represents a significant concern for hydrogen entry into the steel. Exposure to acid solutions, in which the hydrogen enters the steel by diffusion, is usually a lesser concern when compared to electroplating.

7.1 The charging of hydrogen into steel, whether by electrolysis or by corrosion, increases parabolically with time and follows this relationship. $[H] = C\ (t)^{1/2}$ [H] the concentration of hydrogen varies with the square root of time (t). C is a proportionality constant.

7.2 Notched tensile test specimens showed embrittlement above 16 hours of electrolytic charging of hydrogen.

7.3 Hydrogen analysis of five 16-hour electrolytically charged specimens resulted in a mean value of 1.71 ($\pm$ 0.37) ml/100g (1.53 ppm) diffusible hydrogen measured by extraction at 200°C.

7.4 The critical concentration of diffusible hydrogen in gun steel is 1.7 ml/100g (1.5 ppm).

7.5 Hydrogen analysis data showed significant variability and this variability might be a result of the temperature variations during the hydrogen charging process and the inherent variation in each specimen's microstructure.

7.6 Scanning Electron Microscope (SEM) photographs confirmed hydrogen embrittlement, showing intergranular fracture, in a specimen hydrogen charged for 24 hours.

7.7 The diffusion of hydrogen into gun steel at room temperatures is a relatively slow process.

7.8 Electrolytic charging of hydrogen moves the hydrogen ion to the cathode specimen's surface, where it becomes, at first, atomic hydrogen, but the rate controlling process for getting the atomic hydrogen into the steel is diffusion.

7.9 With exposure to 50% HCl acid solutions, the amount of hydrogen entering the steel is controlled by the diffusion process. A major portion of the atomic hydrogen formed during corrosion at the metal surface combines to form molecular hydrogen which escapes as a gas.

7.10 Using a pickling solution of 50% HCl in corrosion tests at room temperature, it would take approximately 110 hours for the hydrogen concentration to reach the critical concentration of 1.7 ml/100g.

7.11 Diffusible hydrogen is the hydrogen that may be extracted at 200°C. Diffusible hydrogen is significant in that it is sufficiently mobile to diffuse to high stressed areas and cause hydrogen-assisted cracking.

7.12 The steel may be purged of its diffusible hydrogen by simply heat treating at 400F (200°C) for sufficient time depending on the cross-sectional size of the item. Hydrogen atoms diffuse throughout, both inward and outward, and when hydrogen atoms reach the surface they combine to form the gas and are eliminated.

7.13 Cadmium plating requires additional time for hydrogen elimination because of very slow diffusion through its dense plate.

7.14 There is residual hydrogen within the steel that may be extracted above 200°C. It takes higher energies to break the association or bonding to various defects or "traps" within the microstructure. Therefore, at higher temperatures above 200°C residual hydrogen may be extracted. Residual hydrogen was extracted at 800°C and measured from three specimens. The mean value was 0.18 ml/100g (0.16 ppm).

7.15 At or below 200°C (392°F), residual hydrogen is not free to diffuse. Since it is not mobile within the temperature range (-150 to 200°C) required for hydrogen embrittlement, it is not considered a factor or concern for hydrogen embrittlement. Above 200°C hydrogen embrittlement does not occur because the diffusion rates are so high that

the diffusible hydrogen effuses or outgasses before there is a sufficient concentration of hydrogen at a stress concentration to cause embrittlement.

7.16 When specifying maximum allowable hydrogen concentrations for steel, it is necessary to specify the extraction temperature, because the hydrogen concentration analyzed at fusion (approximately 1500°C) is greater than the diffusible hydrogen concentration measured at 200°C.

PART 8

LITERATURE CITED

1. "Effective Use of Weld Metal Yield Strength for HY-Steels, Report of the Committee on Effective Utilization of Weld Metal Yield Strength", National Materials Advisory Board Report No. NMAB-380, Chapter 6, (1983).

2. Tetleman, A. S., Fracture of Solids, (1962).

3. Penrose, C., "Hydrogen Embrittlement of Gun Tube Steels", Watervliet Arsenal Report #290, (1956).

4. Penrose, C., "Thermal Treatment of Hydrogen Embrittled Gun Steel", Watervliet Arsenal Report #209, (1958).

5. Daniels, W., "A Study of Thermal Relief After Chromium Plating", Watervliet Arsenal Report #6735, (1967).

6. Longmate, M. D., "Investigation of Fastener Failures in 105MM M68 Guns", Benet Weapons Laboratory Report #ARLCB-MR-77037, (Aug 1977).

7. Ball, D. J., Gestal, W. J. and Nippes, E. F., "Determination of Diffusible Hydrogen in Weldments by the RPI Silicone-Oil Extraction Method", Welding Journal Research Supplement, pages 50s - 56s, (March 1981).

8. Savage, W. F., Nippes, E. F., and Homma, H., "Hydrogen Induced Cracking in HY-80 Steel Weldments", Welding Journal, 55 (11), Research Supplement, pages 368-376s, (Nov 1976).

9. Savage, W. F., Nippes, E. F., and Husa, E., "Hydrogen Assisted Cracking in HY-130 Weldments", Welding Journal Research Supplement, pages 233 - 242s, (Aug 1982).

10. Sawhill, J. M., Dix, A. W., and Savage, W. F., "Modified Implant Test for Studying Delayed Cracking" Welding Journal, 53 (12), Research Supplement, pages 554 - 559s, (1974).

11. Troiano, A. R., "The Role of Hydrogen and Other Interstitouls in the Mechanical Behavior of Metals", Trans. ASM 52 (1), pages 54 - 80, (1960).

12. Doremus, R. H., Rates of Phase Transformations, pages 26 - 28, (1985).

13. Van Vlack, L. H., Elements of Materials Science and Engineering, pages 139 - 141, (1980).

14. Interrante, C. G., "Basic Aspects of the Problems of Hydrogen in Steels", Current Solutions to Hydrogen Problems in Steels, Proceedings of the First International Conference, pg. 10, (1982).

15. Graville, B. A., Principles of Cold Cracking Control, pages 19 - 21, (1975).

16. Graville, pg. 19.

17. "Welding - Determination of Hydrogen in Deposited Weld Metal", International Standard 3690, (March 1977).

18. Colangelo, V. J. and Heiser, F. A., Analysis of Metallurgical Failures, pages 97 - 99, (1987).

19. Kim, C. D., "Hydrogen Damage Failures", Metals Handbook Volume 11, Failure Analysis and Prevention, pages 245 - 251, (1986).

20. Kim, pg. 83.

21. Doremus, pg. 9.

22. Colangelo, V. J. and Thornton, P., Engineering Materials, pg. 119, (1985).

23. Doremus, pg. 9.

24. Beck, W., Bockris, J., McBreen, J. and Nanis, L., "Hydrogen Permeation in Metals as a Function of Stress, Temperature, and Dissolved Hydrogen Concentration", Hydrogen Damage, pages 191 - 195, (1979).

25. Coe, Frank (Editor), Hydrogen in Welds, pg. 10, (1973).

26. Coe, Frank, "Hydrogen Measurements", Metal Construction, pages 20 - 25, (Jan 1986).

PART 9

BIBLIOGRAPHY

Andersson, B., Hydrogen Cracking in Steel Weldments, Chalmers University of Technology, Goteborg, Sweden, 1981.

Ball, D. J., W. J. Gestal, Jr., and E. F. Nippes, "Determination of Diffusible Hydrogen in Weldments by the RPI Silicone-Oil Extraction Method", Welding Journal, Research Supplement, pages 50-56, March 1981.

Beachem, C. D. (Editor), Hydrogen Damage, American Society of Metals, Metals Park, OH, 1979.

Bernstein, I. M. (Editor) and A. W. Thompson, Hydrogen Effects in Metals, AIME NY, NY, 1981.

Blanchard, P. A. and A. R. Troiano, "Hydrogen Embrittlement in Terms of Modern Theory of Fracture, WADC Tech Report 59-444", Wright Air Development Center, Wright Patterson Air Force Base, OH, 1959.

"Cadmium Plating", Federal Specification QQ-P-416E, (1987).

"Chromium Plating (Electrodeposited)", Federal Specification QQ-C-320B, 1974.

Coe, F., (Editor), Hydrogen in Welds, British Welding Research Association, 1973.

Coe, Frank, "Hydrogen Measurements", Metal Construction, pages 20-25, January 1986.

Colangelo, V. J. and P. Thornton, "Chapter 5, Material Transport", Engineering Materials, Prentice Hall, NY, NY, 1985.

Colangelo, V. J. and F. A. Heiser, Analysis of Metallurgical Failures, 2nd Edition, John Wiley, Inc., New York, 1987.

Daniels, W., "A Study of Thermal Relief After Chromium Plating, Watervliet Report 6735", Benet Weapons Laboratory, Watervliet, NY 1967.

Dana, A., F. Shortsleeve and A. R. Troiano, Relation of Flake Formation in Steels to Hydrogen, Microstructure, and Stress, Case Institute of Technology, Cleveland, 1954.

"Effective Use of Weld Metal Yield Strength for Hy-Steels, Report of the Committee on Effective Utilization of Weld Metal Yield Strength" National Materials Advisory Board - Publication NMAB-380, National Academy Press, Washington, DC, 1983.

Graville, Brian A., Principles of Cold Cracking Control Dominion Bridge Co., Montreal, 1975.

Gibala R. and R. F. Hehemann (Editors), Hydrogen Embrittlement and Stress Corrosion Cracking, American Society of Materials, Metals Park, Ohio, 1984.

Heidersbach R. and B. Allen, "Electroplated Cadmium as a Hydrogen Barrier" pg 104-105, Current Solutions to Problems in Steel, American Society of Metals, Metals Park, OH, 1982.

Interrante, C. G., "Basic Aspects of the Problems of Hydrogen in Steels", pg 3-16, Current Solutions to Problems in Steel, American Society of Metals, Metals Park, OH, 1982.

Interrante, C. G. (Editor) and G. M. Pressouyre, Current Solutions to Problems in Steel, American Society of Metals, Metals Park, OH, 1982.

"Investigation of the Effect of Hydrogen Embrittlement and its Relief in Phosphate Coated AISI 4340 and 1095 Steels, NAVORD Report 6509" Naval Weapons Plant, Washington, DC, 1959.

Kim, C. D., "Hydrogen-Damage Failures, pg 245-251, Metals Handbook, Ninth Edition, Volume 11, Failure Analysis and Prevention, American Society of Metals, 1986.

Longmate, M. D., "Investigation of Fastener Failures in 105mm M68 guns and 152mm M81 and M162 Gun Launcher", Benet Weapons Laboratory Report ARLCB-MR-77037, Watervliet, NY (Aug 1977).

Louthan, M. R. Jr., R. P. McNitt, and R. D. Sisson, Jr. (Editor), Environmental Degradation of Engineering Materials in Hydrogen, Virginia Polytechnic Institute, September, 1981.

Metals Handbook, Ninth Edition, Volume 5, Surfacing Finishing and Coating, "Cadmium Plating", pg 256-269, American Society of Metals, 1982.

Metals Handbook, Ninth Edition, Volume 8, Mechanical Testing, "Tests for Hydrogen Embrittlement", pg. 537-543, American Society of Metals, 1985.

Paatsch, W., "Electroplating Without Hydrogen Embrittlement", pg. 106-108, Current Solutions to Problems in Steel, American Society of Metals, Metals Park, OH, 1982.

Penrose, Catherine, "Hydrogen Embrittlement of Gun Tube Steels", Watervliet Arsenal R&D Report #290, Benet Weapons Laboratory, Watervliet, NY, 1956.

Penrose, Catherine, "Thermal Treatment of Hydrogen Embrittled Gun Steel, Watervliet Arsenal R&D Report #209, Benet Weapons Laboratory, Watervliet, NY, 1958.

Pressouyre, G. M., Current Solutions to Problems in Steel, pg. 18-36, American Society of Metals, Metals Park, OH, 1982.

Raymond, Louis (Editor), Hydrogen Embrittlement Testing, STP 543, ASTM, Baltimore, MD, 1974.

Sawhill, J. M., A. W. Dix and W. F. Savage, "Modified Implant Test for Studying Delayed Cracking, Welding Journal, 53 (12) Research Supplement (1974).

Savage, W. F., E. F. Nippes, and H. Homma, "Hydrogen Induced Cracking in HY-80 Steel Weldments" Welding Journal, Welding Research Supplement, pages 368-376, November, 1976.

Savage, W. F., E. F. Nippes and Y. Toknaga, "Hydrogen Induced Cracking in HY-130 Steel Weldments", Welding Journal, pages 118(s) - 126(s), April 1978.

Scarfone, Leonard, "Hydrogen Embrittlement", Watervliet Arsenal Report #236, Watervliet Arsenal, 1957.

Troiano, A. R., "The Role of Hydrogen and Other Interstitials in the Mechanical Behavior of Metals", Trans ASM 52(1), (1960).

Van Vlack, L. H., Elements of Materials Science and Engineering, 4th Edition, Addison - Wesley Reading, Mass (1980).

"Welding - Determination of Hydrogen in Deposited Weld Metal", International Standard 3690, March 1977.

Wolff, R. H., "Hydrogen Embrittlement of Steel in Metal Finishing Processes of Black Oxide and Zinc Phosphate", Rock Island Arsenal Report #402, Rock Island Arsenal, 1966.

Wroblowa, H., J. McBreen, "A Technique for the Evaluation of Hydrogen Embrittlement", ASTIA #428541, University of Pennsylvania for Naval Air Material Center, 1963.

TECHNICAL REPORT INTERNAL DISTRIBUTION LIST

	NO. OF COPIES
CHIEF, DEVELOPMENT ENGINEERING BRANCH	
ATTN: SMCAR-CCB-D	1
-DA	1
-DC	1
-DM	1
-DP	1
-DR	1
-DS (SYSTEMS)	1
CHIEF, ENGINEERING SUPPORT BRANCH	
ATTN: SMCAR-CCB-S	1
-SE	1
CHIEF, RESEARCH BRANCH	
ATTN: SMCAR-CCB-R	2
-R (ELLEN FOGARTY)	1
-RA	1
-RM	1
-RP	1
-RT	1
TECHNICAL LIBRARY ATTN: SMCAR-CCB-TL	5
TECHNICAL PUBLICATIONS & EDITING UNIT ATTN: SMCAR-CCB-TL	2
DIRECTOR, OPERATIONS DIRECTORATE ATTN: SMCWV-OD	1
DIRECTOR, PROCUREMENT DIRECTORATE ATTN: SMCWV-PP	1
DIRECTOR, PRODUCT ASSURANCE DIRECTORATE ATTN: SMCWV-QA	1

NOTE: PLEASE NOTIFY DIRECTOR, BENET LABORATORIES, ATTN: SMCAR-CCB-TL, OF ANY ADDRESS CHANGES.

TECHNICAL REPORT EXTERNAL DISTRIBUTION LIST

	NO. OF COPIES
ASST SEC OF THE ARMY RESEARCH AND DEVELOPMENT ATTN: DEPT FOR SCI AND TECH THE PENTAGON WASHINGTON, D.C. 20310-0103	1
ADMINISTRATOR DEFENSE TECHNICAL INFO CENTER ATTN: DTIC-FDAC CAMERON STATION ALEXANDRIA, VA 22304-6145	12
COMMANDER US ARMY ARDEC ATTN: SMCAR-AEE	1
SMCAR-AES, BLDG. 321	1
SMCAR-AET-O, BLDG. 351N	1
SMCAR-CC	1
SMCAR-CCP-A	1
SMCAR-FSA	1
SMCAR-FSM-E	1
SMCAR-FSS-D, BLDG. 94	1
SMCAR-MSI (STINFO) PICATINNY ARSENAL, NJ 07806-5000	2
DIRECTOR US ARMY BALLISTIC RESEARCH LABORATORY ATTN: SLCBR-DD-T, BLDG. 305 ABERDEEN PROVING GROUND, MD 21005-5066	1
DIRECTOR US ARMY MATERIEL SYSTEMS ANALYSIS ACTV ATTN: AMXSY-MP ABERDEEN PROVING GROUND, MD 21005-5071	1
COMMANDER HQ, AMCCOM ATTN: AMSMC-IMP-L ROCK ISLAND, IL 61299-6000	1
COMMANDER ROCK ISLAND ARSENAL ATTN: SMCRI-ENM ROCK ISLAND, IL 61299-5000	1
DIRECTOR US ARMY INDUSTRIAL BASE ENGR ACTV ATTN: AMXIB-P ROCK ISLAND, IL 61299-7260	1
COMMANDER US ARMY TANK-AUTMV R&D COMMAND ATTN: AMSTA-DDL (TECH LIB) WARREN, MI 48397-5000	1
COMMANDER US MILITARY ACADEMY ATTN: DEPARTMENT OF MECHANICS WEST POINT, NY 10996-1792	1
US ARMY MISSILE COMMAND REDSTONE SCIENTIFIC INFO CTR ATTN: DOCUMENTS SECT, BLDG. 4484 REDSTONE ARSENAL, AL 35898-5241	2
COMMANDER US ARMY FGN SCIENCE AND TECH CTR ATTN: DRXST-SD 220 7TH STREET, N.E. CHARLOTTESVILLE, VA 22901	1
COMMANDER US ARMY LABCOM MATERIALS TECHNOLOGY LAB ATTN: SLCMT-IML (TECH LIB) WATERTOWN, MA 02172-0001	2

NOTE: PLEASE NOTIFY COMMANDER, ARMAMENT RESEARCH, DEVELOPMENT, AND ENGINEERING CENTER, US ARMY AMCCOM, ATTN: BENET LABORATORIES, SMCAR-CCB-TL, WATERVLIET, NY 12189-4050, OF ANY ADDRESS CHANGES.

TECHNICAL REPORT EXTERNAL DISTRIBUTION LIST (CONT'D)

	NO. OF COPIES
COMMANDER US ARMY LABCOM, ISA ATTN: SLCIS-IM-TL 2800 POWDER MILL ROAD ADELPHI, MD 20783-1145	1
COMMANDER US ARMY RESEARCH OFFICE ATTN: CHIEF, IPO P.O. BOX 12211 RESEARCH TRIANGLE PARK, NC 27709-2211	1
DIRECTOR US NAVAL RESEARCH LAB ATTN: MATERIALS SCI & TECH DIVISION	1
CODE 26-27 (DOC LIB) WASHINGTON, D.C. 20375	1

	NO. OF COPIES
COMMANDER AIR FORCE ARMAMENT LABORATORY ATTN: AFATL/MN EGLIN AFB, FL 32543-5434	1
COMMANDER AIR FORCE ARMAMENT LABORATORY ATTN: AFATL/MNG EGLIN AFB, FL 32542-5000	1
METALS AND CERAMICS INFO CTR BATTELLE COLUMBUS DIVISION 505 KING AVENUE COLUMBUS, OH 43201-2693	1

NOTE: PLEASE NOTIFY COMMANDER, ARMAMENT RESEARCH, DEVELOPMENT, AND ENGINEERING CENTER, US ARMY AMCCOM, ATTN: BENET LABORATORIES, SMCAR-CCB-TL, WATERVLIET, NY 12189-4050, OF ANY ADDRESS CHANGES.