AD-A178 578 THE EFFECT OF MULTIPATH ON DIGITAL COMMUNICATIONS SYSTEMS: WITH APPLICATION TO SPACE STATION(U) NAVAL POSTGRADUATE SCHOOL MONTEREY CA W J TOTI DEC 86 1/2

UNCLASSIFIED F/G 17/2 NL

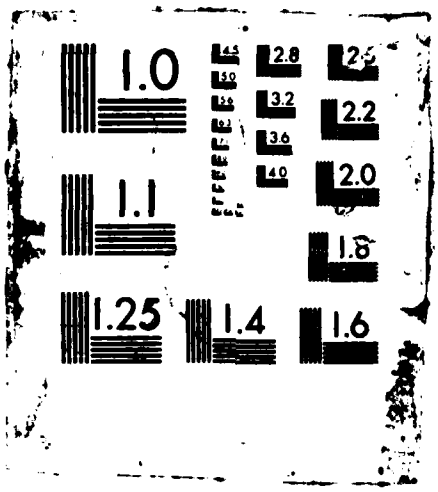
1.0
2.8
2.5
3.2
2.2
3.6
4.0
2.0
1.1
1.8
1.25
1.4
1.6

AD-A178 578

DTIC FILE COPY

NAVAL POSTGRADUATE SCHOOL

Monterey, California

THESIS

APR 3 1987
A

THE EFFECT OF MULTIPATH ON DIGITAL
COMMUNICATIONS SYSTEMS:
WITH APPLICATION TO SPACE STATION

by

William Joseph Toti

December 1986

Thesis Advisor: Daniel Bukofzer

Approved for public release; distribution is unlimited

87 4 2 080

REPRODUCED AT GOVERNMENT EXPENSE

A178578

SECURITY CLASSIFICATION OF THIS PAGE

REPORT DOCUMENTATION PAGE

1a REPORT SECURITY CLASSIFICATION Unclassified	1b RESTRICTIVE MARKINGS
2a SECURITY CLASSIFICATION AUTHORITY	3 DISTRIBUTION/AVAILABILITY OF REPORT Approved for public release; distribution is unlimited
2b DECLASSIFICATION/DOWNGRADING SCHEDULE	
4 PERFORMING ORGANIZATION REPORT NUMBER(S)	5 MONITORING ORGANIZATION REPORT NUMBER(S)
6a NAME OF PERFORMING ORGANIZATION Naval Postgraduate School 6b OFFICE SYMBOL (If applicable) 62	7a NAME OF MONITORING ORGANIZATION Naval Postgraduate School
6c ADDRESS (City, State, and ZIP Code) Monterey, California 93943-5000	7b ADDRESS (City, State, and ZIP Code) Monterey, California 93943-5000
8a NAME OF FUNDING/SPONSORING ORGANIZATION 8b OFFICE SYMBOL (If applicable)	9 PROCUREMENT INSTRUMENT IDENTIFICATION NUMBER
8c ADDRESS (City, State, and ZIP Code)	10 SOURCE OF FUNDING NUMBERS PROGRAM ELEMENT NO / PROJECT NO / TASK NO / WORK UNIT ACCESSION NO

11 TITLE (Include Security Classification)
THE EFFECT OF MULTIPATH ON DIGITAL COMMUNICATIONS SYSTEMS: WITH APPLICATION TO SPACE STATION

12 PERSONAL AUTHOR(S)
Toti, William J.

13a TYPE OF REPORT	13b TIME COVERED	14 DATE OF REPORT (Year, Month, Day)	15 PAGE COUNT
Master's Thesis	FROM ____ TO ____	1986 December	98

16 SUPPLEMENTARY NOTATION

17 COSATI CODES			18 SUBJECT TERMS (Continue on reverse if necessary and identify by block number)
FIELD	GROUP	SUB-GROUP	Digital Communications, Multipath, Fading, Rician fading, ISI, MPSK, MFSK, Space Station

19 ABSTRACT (Continue on reverse if necessary and identify by block number) Analysis of the effect of multipath propagation on digital communications systems was conducted. A brief overview of the root causes of multipath propagation was included in this discussion. Probabilities of error were then derived for a generalized digital communications system experiencing Rician fading due to multipath propagation. Exact results were obtained for equiprobable M-ary Frequency Shift Keyed and M-ary Phase Shift Keyed modulation schemes used to transmit digital data. Furthermore, the probability of error was obtained for a generalized digital communication system experiencing single-bit Intersymbol Interference due to multipath propagation. Finally, the performance of digital communications links for NASA's Space Station operating in the presence of Intersymbol Interference was evaluated. Results obtained tend to show that severe communication system performance degradation may occur on those links under certain transmitter/receiver Space Station geometries.

20 DISTRIBUTION/AVAILABILITY OF ABSTRACT ☒ UNCLASSIFIED/UNLIMITED ☐ SAME AS RPT ☐ DTIC USERS	21 ABSTRACT SECURITY CLASSIFICATION Unclassified
22a NAME OF RESPONSIBLE INDIVIDUAL Daniel Bukofzer	22b TELEPHONE (Include Area Code) (408) 646-2859 22c OFFICE SYMBOL 62Bh

DD FORM 1473, 84 MAR — 83 APR edition may be used until exhausted. All other editions are obsolete.

SECURITY CLASSIFICATION OF THIS PAGE

Approved for public release, distribution is unlimited.

The Effect of Multipath on Digital Communications Systems:
With Application to Space Station

by

William Joseph Toti
Lieutenant, United States Navy
B.S., United States Naval Academy, 1979

Submitted in partial fulfillment of the
requirements for the degrees of

MASTER OF SCIENCE IN ELECTRICAL ENGINEERING
and
ELECTRICAL ENGINEER

from the

NAVAL POSTGRADUATE SCHOOL

December 1986

Author: _____
William Joseph Toti

Approved by: _____
Daniel Bukofzer, Thesis Advisor

_____
Jeffrey Knorr, Second Reader

_____
Harriet Rigas, Chairman
Department of Electrical and Computer Engineering

_____
John N. Dyer
Dean of Science and Engineering

ABSTRACT

Analysis of the effect of multipath propagation on digital communications systems was conducted. A brief overview of the root causes of multipath propagation was included in this discussion. Probabilities of error were then derived for a generalized digital communications system experiencing Rician fading due to multipath propagation. Exact results were obtained for equiprobable M-ary Frequency Shift Keyed and M-ary Phase Shift Keyed modulation schemes used to transmit digital data. Furthermore, the probability of error was obtained for a generalized digital communications system experiencing single-bit Intersymbol Interference due to multipath propagation. Finally, the performance of digital communication links for NASA's Space Station operating in the presence of Intersymbol Interference was evaluated. Results obtained tend to show that severe communication system performance degradation may occur on those links under certain transmitter/receiver and Space Station geometries.

DTIC COPY INSPECTED 6

A-1

TABLE OF CONTENTS

I. INTRODUCTION---------- 6

II. THE ANATOMY OF MULTIPATH----------10

A. CATEGORIES AND CLASSES----------11

1. Planar Reflection----------12

2. Diffuse Reflection----------16

B. FREQUENCY EFFECTS----------17

C. MULTIPATH EFFECTS----------18

D. SIGNAL MODEL----------20

E. MULTIPATH PARAMETERS----------21

1. Fading Model----------21

2. ISI Model----------22

F. LIMITATIONS----------22

III. THE RICIAN FADING PROBLEM----------24

A. INTRODUCTION----------24

B. PRELIMINARY ANALYSIS----------24

C. THE DETECTION PROBLEM----------35

D. RECEIVER PERFORMANCE----------45

E. SIGNAL POWERS----------53

1. MFSK----------54

2. MPSK----------60

IV. ISI ANALYSIS OF M-ARY RECEIVERS WITH FIXED MULTIPATH----------65

V. AN APPLICATION EXAMPLE: SPACE STATION----------75

A. DESCRIPTION OF THE RELEVANT PORTIONS OF THE SPACE STATION COMMUNICATIONS SYSTEM----------75

B. ANALYSIS OF THE POTENTIAL FOR SPACE STATION ISI-82

1. Scenario----------82

2. Analysis----------84

IV. CONCLUSIONS----------91

LIST OF REFERENCES----------94

BIBLIOGRAPHY----------95

INITIAL DISTRIBUTION LIST----------97

I. INTRODUCTION

This thesis was intended to accomplish four purposes:

(1) To introduce the reader to the subject of multipath propagation is and how it affects the performance of digital communications systems,

(2) To develop as general an expression as possible for the probability of error of a digital communications system operating in a Rician Fading environment due to multipath propagation,

(3) To develop as general an expression as possible for the probability of error of a digital communications system that experiences Intersymbol Interference (ISI) effects due to multipath propagation, and

(4) To use the above analysis to determine whether there would be significant performance degradation due to multipath propagation on the communication links for NASA's proposed Space Station.

In a certain sense, success was not complete. Pertinent points follow.

Chapter 2 does indeed contain a brief introduction to the phenomenon of multipath propagation. As a matter of practicality, some rather important concepts were kept out of the description in order to enhance brevity, while other less important items were included in order to make the analysis that follows in later chapters more understandable. Nevertheless, Chapter 2 highlights some of the problems associated with communications in an environment where multipath propagation exists, and indicates how the relevant

system parameters relate to the physical phenomena associated with multipath propagation.

Chapter 3 is devoted to the task of deriving the probability of error of a digital communications system experiencing Rician fading due to multipath propagation. Although numerous treatments exist of generalized digital communications systems experiencing so-called Rayleigh fading, Rayleigh fading is constrained to the case where the reflecting mechanism is diffuse--meaning that specular reflections are not covered. Since multipath propagation tends to occur due to both diffuse and specular reflections, the Rayleigh Fading model is in essence incomplete. If one is to consider fading caused by a combination of both specular and diffuse reflectors, one must add a specular term to the received signal model resulting in a Rician probability density function (p.d.f.) for the received signal amplitude statistics. No derivations for the probability of receiver error under Rician fading have been found, so one was attempted here. Rather than attempting to obtain a very general result, a sub-case of significant interest was considered in detail. Specifically, only equiprobable signal transmission was considered, and a complete expression was arrived at for the case of M-ary Frequency Shift Keyed (MFSK) modulated signals. Due to the complexity of the final expression in the case of M-ary Phase Shift Keyed (MPSK)

modulated signals which prevented us from showing it in its full form, a result was obtained for MPSK as well.

Chapter 4 begins with a presentation of the configuration of an optimum receiver for the processing of one of M transmitted signals. The probability of receiver error when ISI effects are present is then obtained. In order to keep the derivation manageable, this analysis covers only the case where one adjacent bit interferes with the presently transmitted bit. Once again, the final result covers only the case where the M possible signals have an equal probability of transmission. Except for this constraint, the results are quite general, and can be applied to a larger class of modulation schemes.

Finally, Chapter 5 addressed the problem of multipath propagation as it applies to NASA's Space Station. It includes a description of the relevant portions of the Space Station Communications System under consideration. Due to the fact that it was impractical to determine appropriate fading parameters using the more complete Rician model, multipath analysis for Space Station was carried out using only the ISI model developed in Chapter 4. Even so, and despite the fact that our ISI model considered only the case when a single adjacent bit interferes with the present bit transmission, it was demonstrated that there may indeed be a problem with poor receiver performance under certain conditions when the Space Station is operational. This

analysis indicated that further studies are appropriate, if a properly operating system is to be built.

II. THE ANATOMY OF MULTIPATH

Multipath propagation (or just multipath for short) is an insidious perpetrator. It can affect the performance of a communications system in various ways. Trying to learn something about it is not always easy because phenomenological descriptions require knowledge covering a host of disciplines. Physicists, electromagnetic engineers, and communications engineers describe it differently because all three tend to focus on different aspects of this physical phenomenon.

Physicists, not surprisingly, tend to focus on the physical structure of the mutipath problem, while electromagnetic engineers are best able to provide relatively precise descriptions of what happens to the phase and amplitude of the propagating wave for a set transmitter and receiver location and a set multipath geometry using numerical methods. Communication engineers are generally interested in a probabilistic description of the channel in terms of a probability density function (PDF) so that an optimum receiver structure can be developed and its probability of error determined and evaluated.

The simple truth is that there are cases in which theory alone cannot provide the answers. The problem of launching

an EM wave from some point "A" to some point "B" and predicting propagating effects is often too complicated to analyze. Sometimes one may find that the only way to correctly design a system is to first experiment with the channel in order to obtain a good model from which analysis and design predictions can be obtained. Nevertheless, there are fairly general theoretical models of the effects associated with multipath that communication engineers can use, which if coupled with proper understanding of the physics of the situation, may result in reasonable analyses and performance predictions. The intent of this chapter is to provide a basic introduction to the phenomenon of multipath, with particular emphasis on the salient features which are pertinent to the communication problems studied in the sequel.

A. CATEGORIES AND CLASSES

As described by the physicist, multipath effects are a manifestation of either reflection or refraction. [1] Electromagnetic engineers also include diffraction, scattering, focusing, and attenuation as modifiers of multipath propagation, although all of these except for diffraction can be derived from the basic first two. [2, p. 2] For communication engineers, it is important to know how those mechanisms affect the amplitude and phase of the

received signal, as both can influence the received signal quality.

Most technical sources list three varieties of electromagnetic reflection: specular, resonant, and diffuse. From the communications standpoint, specular and resonant reflections produce the same results. So, for our purposes, it is sufficient to categorize the sources of multipath as being either one of two classes:

- planar, including specular and resonant, and
- diffuse.

Each affects the communications system differently.

1. Planar Reflection

This is the term used for cases when an electromagnetic plane wave is reflected off a relatively smooth surface by either specular or resonant (sometimes called "Bragg") scattering. Planar is the kind of reflection most sought after in applications where multipath is used to the advantage of the designer, such as when ionospheric "skips" are used in order to extend the range of high frequency transmissions, since it usually does not distort the signal significantly.

Specular reflection is what occurs when the surface of the reflector is very smooth in relation to the wavelength of the incident wave. Note that the reflector need not be smooth at all, and it may have a surface that on the whole appears fairly non-uniform. However, as long as the surface

appears to be smooth in relation to the wavelength of the incident radiation, (that is, surface roughness, ρ, is much less than the incident wavelength, λ) specular reflection will result. A definition of roughness, called the Rayleigh criterion, is as follows

$$\rho \equiv \frac{4\pi\sigma \sin(\phi)}{\lambda} \tag{2-1}$$

where σ is defined as the standard deviation of the surface irregularities relative to the mean surface height, ϕ is the angle of incidence measured from the grazing angle, and λ is the wavelength of the carrier [3]. Pictorially, it can be viewed as shown in Figure 2-1.

"Resonant" reflection occurs when a surface is perhaps too rough to reflect specularly, but the roughness is periodic with a spatial separation corresponding to some multiple of half the incident wavelength. When this geometrical scenario is set up, the quanta of reflected energy can constructively interfere to form a reflected wave which will reach the receiver [3]. Resonant reflection can be pictorially viewed as shown in Figure 2-2.

Again, it is important to note that despite the different physical phenomena involved, all planar reflections, both specular and resonant, affect the transmitted signal in basically the same way.

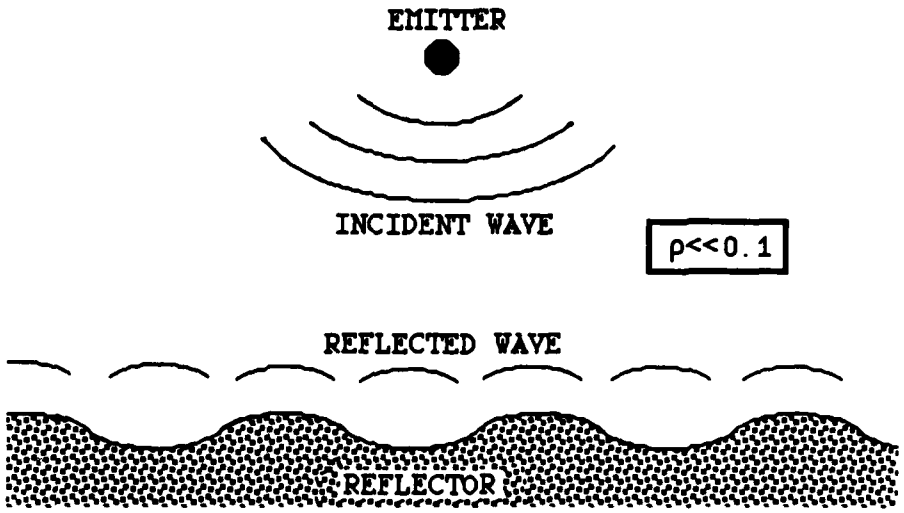

FIGURE 2-1. Specular Reflection

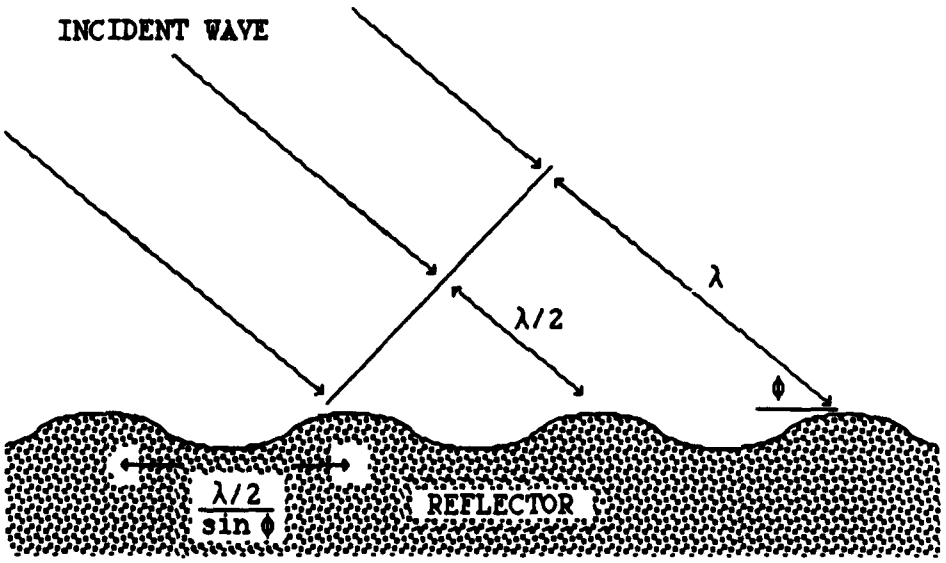

FIGURE 2-2. Resonant Reflection

When planar reflection occurs, both the amplitude and phase of the reflected signal can be changed, but in a predictable, fairly linear, fashion. Its effects can

generally be predicted and compensated for, unless the structure of the reflector is changing with time in an unpredictable fashion. In such a case, the amplitude change and phase shift are mathematically treated as random processes, resulting in a single reflected-signal path. But, the receiver always processes a single direct-path signal along with a single reflected-path signal when planar reflection occurs.

The reflected-path signal can cause a phenomenon known as Intersymbol Interference (ISI). This occurs when the time delay encountered by the reflected signal is so long that it reaches the receiver at the same time as the direct-path signal for subsequent transmitted symbols. For digital communications, ISI can be quite destructive.

Suppose, for example, that a digital communications link set up with bit duration τ, releases a bit from the transmitter at time t, and via the direct path, reaches the receiver at time $t+\delta$. The reflected-path signal will travel a longer route to get to the receiver, so the bit traveling this path will reach the receiver at a later time $t+\delta+\varepsilon\tau$. If bit "k" is transmitted at time t, the subsequent bit "k+1" can reach the receiver via the direct path before or during the time that the reflected bit "k" does. ISI will then result. This situation can be graphically viewed as shown in Figure 2-3.

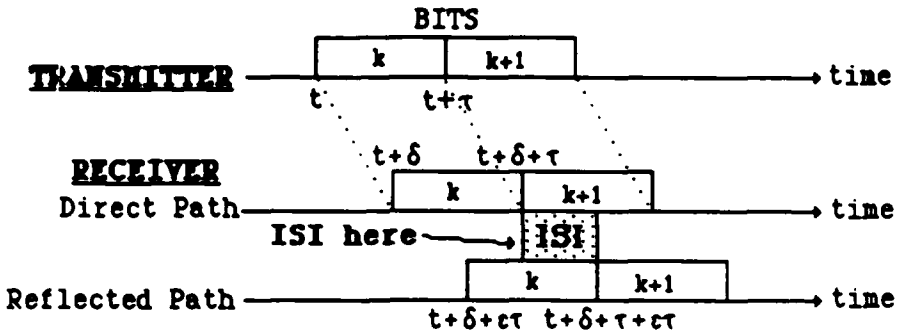

FIGURE 2-3. Intersymbol Interference (ISI)

If there is more than one reflected signal path causing several bits to be received simultaneously, the situation can become almost untenable. This will be a topic of further discussion in Chapter 4 of this thesis. Fortunately, the study of ISI has received significant attention in the past so that relatively effective techniques to combat ISI are available.

It is important to note that if there is a single planar reflector present, and if enough information about the reflector's characteristics is at hand, an optimum or near optimum signal processing receiver structure is usually obtainable.

2. Diffuse Reflection

Multipath propagation due to diffuse reflection usually occurs when the reflector is not a discrete object. With diffuse reflection, the amplitude and phase of the signal can be altered, but there are further complications. The

received signal may in fact be a continuum of reflections, with its incoming phase smeared to a point where it becomes undecipherable. The amplitudes of any one reflected component may be indistinguishable from the others. So-called Rayleigh fading is a common manifestation of diffuse reflection. The ionoshpere, for example, may act as a diffuse reflector to certain signal frequency bands. Some troposhperic effects such as precipitation and ducting can behave as diffuse reflectors. Thus, although diffuse reflection is not a simple phenomenon, it is common and must be dealt with. Fortunately, this problem received early recognition by analysts and system designers so that the available pertinent analytical tools have reached a fairly mature stage.

Since diffuse reflectors seem to sometimes act as a continuum of individual specular reflectors, computer models can be developed in which the diffuse reflector is simulated as a sum of a large number of specular reflectors.

As with specular reflection, the characteristics of diffuse reflectors can change over time and appear to be random, thus necessitating the use of random processes in the mathematical model.

B. FREQUENCY EFFECTS

The physics of multipath are fairly straightforward. If the reflection occurs off a fairly flat plate, the effect

will appear to be specular. If the reflector is less discrete, diffuse multipath effects can be expected.

But what appears flat and smooth to one packet of EM waves, may appear differently to another. For instance, if long-wavelength high frequency radiation were bounced off a large, flat structure that appeared smooth, the radiation would be specularly reflected. However the surface roughness of the structure may be such that it might appear rough to shorter-wavelength EM waves and cause diffuse reflection.

In reality, no reflector is either purely planar or diffuse. But in many instances, the problem can be simplified to one in which, for a given set of frequencies, a reflector can be modeled as either planar or diffuse because one type of reflection is clearly dominant.

C. MULTIPATH EFFECTS

There are two basic ways to describe the effects of multipath from a communications standpoint. They are: (a) Fading, and (b) Intersymbol Interference (ISI).

When a transmitted signal arrives at the receiver, the transmitted bit is adjoined by scaled and delayed versions of the transmitted bit due to multipath. These scaled and delayed versions will interfere with the normal performance of the receiver. It is possible to empirically measure the degradation in receiver performance under given multipath conditions in terms of signal loss, usually expressed in

units of decibels. When the receiver's measured signal loss is expressed in this fashion, the effect is called multipath "fading."

Another common method of determining the effect of multipath on a receiver's performance is to analytically express the probability of error for the receiver under circumstances where a previously transmitted bit is received at the same time as the presently transmitted bit. That is, adjacent bits can be delayed by the multipath to such an extent that they are received at the same time as bits that were transmitted later. This phenomenon is called Intersymbol Interference, or ISI. This method is purely analytical, and therefore can be insoluble for certain conditions of multipath whereby a large number of bits are delayed in such a fashion that many such bits are received simultaneously.

It is possible to rule out any form of multipath degradation if the following two criteria are satisfied:

(1) There are no RF reflectors, either specular or diffuse, which generate multipath between the transmitting and receiving platforms, and

(2) The receiving platform is small enough, simple enough, or "clean" enough so that the transmitted signal is not "bounced around" within the platform's structural boundaries before the signal reaches the receiving antenna. It is important to note that this criterion is heavily dependent on the bit rate, because the bit rate is what determines whether the receiving platform's structure is of a size that will result in this multiple bounce effect described above.

D. SIGNAL MODEL

The general mathematical form of an M-ary digital communication signal is

$$s_{i,T}(t) = \sqrt{2}\ f_i(t)\ \cos\{\omega_c t + \phi_i(t)\} \tag{2-2}$$

where the subscript i represents any one of M possible transmitted signals, the subscript T represents the duration of the signal, $f_i(t)$ determines the amplitude shape of the i'th signal, ω_c is the carrier frequency, and $\phi_i(t)$ is the deterministic phase of the signal. This mathematical form is equivalent to

$$s_{i,T}(t) = \sqrt{2}\ \mathrm{Re}\left[f_i(t)\ e^{j[\omega_c t + \phi_i(t)]} \right] \tag{2-3}$$

Since this form is mathematically easier to manipulate, it is sometimes preferred over the cosine form of Equation 2-2.

To illustrate how these expressions are used, consider Binary Phase Shift Keyed (BPSK) modulation. In this modulation scheme, there are two possible signals to be transmitted. These signals would be

$$s_{1,T}(t) = \sqrt{2}\ A\ \cos(\omega_c t + \pi) \tag{2-4}$$

$$s_{2,T}(t) = \sqrt{2}\ A\ \cos(\omega_c t + \pi) \tag{2-5}$$

Thus, for this modulation scheme, $f_i(t)$ would in both cases be the signal amplitude, A, and signal "1" is differentiated

from signal "2" by the opposite (antipodal, in this case) phases.

Frequency Shift Keyed (FSK) modulation is similar, but instead of substituting a fixed phase term in the place of $\phi_i(t)$, a function corresponding to the integral of the instantaneous phase must be used.

In the case of an Amplitude Shift Keyed (ASK) modulation, the $\phi_i(t)$ terms would be constant or eliminated, and the $f_i(t)$ term would be used to define the different possible signal amplitudes.

E. MULTIPATH PARAMETERS

1. Fading Model

Chapter 3 presents the analysis pertaining to the fading effects of multipath propagation. Utilization of this analysis requires that the following steps be taken:

(1) Experimentation or computer modeling of the reflecting structure must be performed in order to provide the necessary multipath parameters. In the case of the Rician model presented in Chapter 3, the parameters are:

$\alpha \equiv$ amplitude of the planar (specular) component

$\delta \equiv$ phase of the planar (specular) component

$v \equiv$ amplitude of the diffuse component

$\theta \equiv$ phase of the diffuse component

The amplitude and phase of the specular component can normally be considered to be deterministic, whereas the parameters pertaining to the diffuse component are usually considered to be random processes. In this analysis, those random processes are assumed to be Gaussian, since this is the case that most often occurs.

(2) Once these parameters have been determined, the modulation scheme to be used must be substituted for the general signal model used in the analysis to follow.

(3) At this point the receiver performance may be obtained directly from the results and the probability of error curves may then be constructed.

We have provided the probability of error for the M-ary FSK (MFSK) case, as well as the steps to be taken to develop the M-ary PSK (MPSK) results.

2. ISI Model

Chapter 4 analyzes the effects of multipath that result in ISI. Although it may be possible to develop a general solution for performance affects due to multipath-induced ISI, the problem rapidly becomes unwieldy. In order to keep the problem manageable, an à priori assumption was made that the modulation scheme to be used would be orthogonal. Therefore, this analysis is only valid if an orthogonal modulation scheme is used.

The required parameters necessary to evaluate the effects of ISI are:

$\beta_i \equiv$ amplitudes of the multipath signals

$\eta_i \equiv$ travel delays of the multipath signals

These parameters can be obtained analytically through simple geometric approaches.

The ISI analysis will be illustrated with an example in Chapter 5.

F. LIMITATIONS

Analysis involving ISI effects has been performed specifically for communication links to be used in NASA's

proposed Space Station. The results are presented in Chapter 5.

A specific example involving fading effects is not included here, since to utilize the performance results obtained in Chapter 3, an empirical model of the physical configuration must be available, either through experimentation or computer modeling of the reflecting structures. This can be (and typically is) an expensive and time-consuming process. Nevertheless, such efforts must be carried out in order to quantify the multipath fading parameters. This fact limits somewhat the utility of the fading performance analysis (excluding its purely theoretical value) because the lack of procurement of realistic values for the fading parameters prevents the application to a Space Station-related problem. An analysis related to the Space Station geometry using arbitrary values for the necessary parameters would be of little value.

Finally, despite the fact that a theoretical analysis of the physical structure of the reflector can provide useful parameters for use in the analysis of ISI performance effects, since the modulation scheme considered for the communication link is orthogonal, the analysis and results of Chapter 4 do apply.

III. THE RICIAN FADING PROBLEM: TRANSMISSION WITH NO DIVERSITY

A. INTRODUCTION

In this chapter, we carry out analysis which models the effects of multipath in the form of a system that induces fading on signals transmitted over such a communications channel. At first, we will assume no particular modulation scheme in order to ensure that the analysis will be applicable to as many communications systems as possible. Thus, a mathematical model for a generalized digital communications signal will be used here. Later we will conclude the analysis by specifying the resultant probability of error (P{e}) for a system employing M-ary Frequency Shift Keyed (MFSK) modulation as well as the mathematical expressions that lead to P{e} for M-ary Phase Shift Keyed (MPSK) modulation. We will also assume that no multipath countermeasures (such as diversity techniques) are implemented.

B. PRELIMINARY ANALYSIS

Assuming no particular digital modulation scheme, the general mathematical form of the transmitted signal is

$$s_{...}(t) = \sqrt{2}\ \mathrm{Re}\left[f_{.}(t)\ e^{j\phi_{.}(t)}\ e^{j\omega_{.}t} \right]$$

$$= \sqrt{2}\ f_i(t)\ \cos\{\omega_c t + \phi_i(t)\} \tag{3-1}$$

where $i = 1,2,\ldots,M$, and $T_b \le t \le T_f$.

As described in Chapter 2, by properly choosing the real functions $f_i(t)$ and $\phi_i(t)$, it is possible to consider a large number of modulation schemes, such as M-ary Frequency Shift Keying (MFSK), M-ary Phase Shift Keying (MPSK), M-ary Amplitude Shift Keying (MASK), and combinations of these, to produce hybrid schemes, like Quadrature Amplitude Modulation (QAM) and the like.

The received signals are modeled as

$$s_i(t) = \sqrt{2}\ \mathrm{Re}\left[v'\ f_i(t)\ e^{j\omega_c t}\ e^{j\phi_i(t)}\ e^{j\theta'}\right] \tag{3-2}$$

where $i = 1,2,\ldots,M$, $T_b \le t \le T_f$, and v' and θ' are functions which represent the combined amplitude and phase changes brought on by multipath propagation. Expanding v' and θ' into the planar and diffuse components, we have

$$v'\ e^{j\theta'} = \alpha\ e^{j\delta} + v\ e^{j\theta} \tag{3-3}$$

where α and δ are the amplitude and phase respectively of the planar component, and v and θ are correspondingly the same for the diffuse component.

The relationship amongst these quantities is graphically displayed in Figure 3-1.

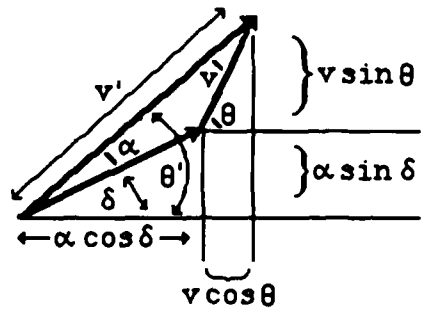

FIGURE 3-1. Rician Fading Signal Geometry

Using the larger triangle in Figure 3-1, we have

$$v'^2 = \alpha^2 + v^2 + 2\alpha v \cos(\theta-\delta) \tag{3-4}$$

In most analyses, it can be assumed that α and δ are deterministic parameters while v and θ are random variables with joint probability density function (p.d.f.)

$$f_{v,\theta}(v,\theta) = \frac{v}{2\sigma^2} \exp\left[-\frac{v^2}{2\sigma^2}\right] \tag{3-5}$$

where $0 \le v \le \infty$, and $0 \le \theta \le 2\pi$, so that v and θ can be seen to be independent Rayleigh and uniformly distributed random variables respectively.

It is shown by Turin [4] that due to the given joint p.d.f. of v and θ, the joint p.d.f of v' and θ' is given by

$$f_{v',\theta'}(v',\theta') = \frac{v'}{2\pi\sigma^2} \exp\left[-\frac{v'^2 + \alpha^2 - 2\alpha v' \cos(\theta'-\delta)}{2\sigma^2}\right] \tag{3-6}$$

where $0 \le v' \le \infty$, and $0 \le \Theta' - \delta \le 2\pi$, so that by direct integration

$$f_{V'}(v') = \int_{\delta}^{\delta+2\pi} \frac{v'}{2\pi\sigma^2} \exp\left[-\frac{v'^2 + \alpha^2 - 2\alpha v \cos(\theta' - \delta)}{2\sigma^2}\right] d\theta'$$

$$= \frac{v'}{\sigma^2} \exp\left[\frac{v'^2 + \alpha^2}{2\sigma^2}\right] I_0\left[\frac{\alpha v'}{\sigma^2}\right] \tag{3-7}$$

where, $0 \leq v' \leq \infty$, resulting in a Rician density for the random variable V'.

Whereas θ is a uniform random variable, θ' is *not* uniform, as can be seen from

$$f_{\Theta'}(\theta') = \int_0^{\infty} \frac{v'}{2\pi\sigma^2} \exp\left[-\frac{v'^2 + \alpha^2 - 2\alpha v' \cos(\theta' - \delta)}{2\sigma^2}\right] dv' \tag{3-8}$$

Several steps must be carried out in order to evaluate the integral, resulting in

$$f_{\Theta'}(\theta') = \frac{1}{2\pi} e^{-\alpha^2/2\sigma^2}$$

$$+ \frac{\alpha}{\sigma\sqrt{2\pi}} \cos(\theta' - \delta) \exp\left[-\frac{\sigma^2 \sin^2(\theta' - \delta)}{2\sigma^2}\right] \mathrm{erf}_*\left[\frac{\alpha \cos(\theta' - \delta)}{\sigma}\right] \tag{3-9}$$

where $0 \leq \theta' - \delta \leq 2\pi$. The actual shape of the p.d.f. is dependent on the α/σ ratio. Note that for a purely diffuse multipath contribution, resulting in $\alpha/\sigma = 0$,

$$f_{\Theta'}(\theta') = \frac{1}{2\pi} \tag{3-10}$$

which is a uniform p.d.f., where $0 \leq \theta' - \delta \leq 2\pi$. For a purely specular multipath component, which results in $\alpha/\sigma \rightarrow \infty$,

$$f_{\theta'}(\theta') = \begin{cases} 0 & \theta' - \delta \neq 0 \\ \infty & \theta' - \delta = 0 \end{cases} \tag{3-11}$$

which corresponds to a Dirac delta function. A complete analysis would require checking that the relationship

$$\int_{-\infty}^{\infty} f_{\theta'}(\theta')\, d\theta' = 1 \tag{3-12}$$

is indeed satisfied, however some integration difficulties arise. Nevertheless, this clearly demonstrates that θ' does not have a simple uniform p.d.f. (unless $\alpha/\sigma = 0$).

Later, the case of δ being a random variable will be investigated. This analysis may be useful if the specular reflector's position is unknown or if it is moving. It will thus be assumed that δ has p.d.f.

$$f_{\Delta}(\delta) = \frac{e^{m \cos(\delta)}}{2\pi I_0(m)} \tag{3-13}$$

where $-\pi < \delta < \pi$, and $0 \leq m \leq \infty$, which due to the variable parameter m, represents a family of p.d.f.'s ranging from the uniform p.d.f. for m=0 to a Dirac delta function for $m \rightarrow \infty$. It will be necessary to determine the overall effect on the p.d.f.'s

involving v' and θ' when δ is random. From previous work, however, even if δ is random, v' will have an (unchanged) Rician p.d.f. as given by Equation 3-7.

Returning now to the received signal $s_i(t)$, we have

$$s_i(t) = \sqrt{2}\ \mathrm{Re}\left[(\alpha e^{j\delta} + v e^{j\theta}) f_i(t)\ e^{j\omega_c t}\ e^{j\phi_i(t)}\right]$$

$$= \sqrt{2}\,\mathrm{Re}\left[\alpha f_i(t) e^{j(\omega_c t + \phi_i(t) + \delta)}\right] + \sqrt{2}\,\mathrm{Re}\left[v f_i(t) e^{j(\omega_c t + \phi_i(t) + \theta)}\right]$$

$$s_i(t) = \sqrt{2}\ \alpha\ f_i(t)\ \cos\left[\omega_c t + \phi_i(t) + \delta\right]$$

$$+ \sqrt{2}\ v\ f_i(t)\ \cos\left[\omega_c t + \phi_i(t) + \theta\right] \qquad (3\text{-}14)$$

The term

$$\sqrt{2}\ \alpha\ f_i(t)\ \cos\left[\omega_c t + \phi_i(t) + \delta\right] \qquad (3\text{-}15)$$

is the so-called specular (multipath) component, but as discussed in Chapter 2 of this thesis, a better name for it would be the "planar" reflection term, since it can be caused by either specular or resonant reflection. In all our analyses, α will be treated as a deterministic quantity. The term

$$\sqrt{2}\ v\ f_i(t)\ \cos\left[\omega_c t + \phi_i(t) + \theta\right] \qquad (3\text{-}16)$$

is the so-called diffuse (multipath) component, where v and θ are random variables with the previously specified p.d.f.'s. Observe that

$$s_i(t) = [\alpha + v\cos(\delta-\theta)]\sqrt{2}\, f_i(t)\cos[\omega_c t + \phi_i(t) + \delta]$$

$$+ v\sin(\delta-\theta)\sqrt{2}\, f_i(t)\sin[\omega_c t + \phi_i(t) + \delta] \qquad (3\text{-}17)$$

For convenience we define

$$a_1 \equiv \alpha + v\cos(\delta-\theta) \qquad (3\text{-}18)$$

$$a_2 \equiv v\sin(\delta-\theta) \qquad (3\text{-}19)$$

Clearly, a_1 and a_2 are random variables, with p.d.f. obtainable from

$$v = \left[(a_1-\alpha)^2 + a_2^2\right]^{1/2} \qquad (3\text{-}20)$$

$$\delta-\theta = \tan^{-1}\left[\frac{a_2}{a_1-\alpha}\right] \qquad (3\text{-}21)$$

and

$$\frac{\partial a_1}{\partial v} = \cos(\delta-\theta) \qquad (3\text{-}22)$$

$$\frac{\partial a_1}{\partial \theta} = v\sin(\delta-\theta) \qquad (3\text{-}23)$$

$$\frac{\partial a_2}{\partial v} = \sin(\delta-\theta) \qquad (3\text{-}24)$$

$$\frac{\partial a_2}{\partial \theta} = -v\sin(\delta-\theta) \qquad (3\text{-}25)$$

The resulting Jacobian of the transformation $J(v,\theta)$ is given by

$$J(v,\theta) = \begin{vmatrix} \cos(\delta-\theta) & v\sin(\delta-\theta) \\ \sin(\delta-\theta) & -v\cos(\delta-\theta) \end{vmatrix} = -v \tag{3-26}$$

Now,

$$f_{v,\theta}\left\{\left[(a_1-\alpha)^2+a_2^2\right]^{1/2},\ \delta-\tan^{-1}\left[\frac{a_2}{a_1-\alpha}\right]\right\} \tag{3-27}$$

$$= \frac{\left[(a_1-\alpha)^2+a_2^2\right]^{1/2}}{2\pi\sigma^2}\exp\left[-\frac{(a_1-\alpha)^2+a_2^2}{2\sigma^2}\right] \tag{3-28}$$

and

$$f_{A_1,A_2}(a_1,a_2) = \frac{f_{v,\theta}\left\{\left[(a_1-\alpha)^2+a_2^2\right]^{1/2},\ \delta-\tan^{-1}\left[a_2/(a_1-\alpha)\right]\right\}}{\left|J\left\{\left[(a_1-\alpha)^2+a_2^2\right]^{1/2},\ \delta-\tan^{-1}\left[a_2/(a_1-\alpha)\right]\right\}\right|}$$

$$= \frac{1}{\sigma\sqrt{2\pi}}\exp\left[-\frac{(a_1-\alpha)^2+a_2^2}{2\sigma^2}\right]$$

$$= \frac{1}{\sigma\sqrt{2\pi}}e^{-(a_1-\alpha)^2/2\sigma^2}\ \frac{1}{\sigma\sqrt{2\pi}}e^{-a_2^2/2\sigma^2} \tag{3-29}$$

This demonstrates that a_1 and a_2 are independent Gaussian random variables of equal variance, σ^2, and means, α and 0 respectively.

Thus, if we define

$$y_{i1}(t) \equiv \sqrt{2}\ f_i(t)\cos\left[\omega_c t + \phi_i(t) + \delta\right] \tag{3-30}$$

$$y_{i2}(t) \equiv \sqrt{2}\ f_i(t)\ \sin\left[\omega_c t + \phi_i(t) + \delta\right] \tag{3-31}$$

we have

$$s_i(t) = \sum_{k=1}^{2} a_k\ y_{ik}(t) \tag{3-32}$$

where $i = 1,2,\ldots,M$, and $T_b \le t \le T_f$.

We now define some quantities of interest, namely

$$\int_{T_b}^{T_f} y_{i1}^2(t)\ dt = \int_{T_b}^{T_f} 2f_i^2(t)\left[\frac{1}{2} + \frac{1}{2}\cos(2\omega_c t + 2\phi_i(t) + 2\delta)\right] dt$$

$$= \int_{T_b}^{T_f} f_i^2(t)\ dt \equiv E_{fi} \tag{3-33}$$

since for any $f_i(t)$ that varies much more slowly than the frequency ω_c

$$\int_{T_b}^{T_f} f_i^2(t)\ \cos\left[2(\omega_c t + \phi_i(t) + \delta)\right] dt \approx 0 \tag{3-34}$$

Also,

$$\int_{T_b}^{T_f} y_{i2}^2(t)\ dt = \int_{T_b}^{T_f} 2f_i^2(t)\left[\frac{1}{2} - \frac{1}{2}\cos(2\omega_c t + 2\phi_i(t) + 2\delta)\right] dt$$

$$= \int_{T_b}^{T_f} f_i^2(t)\ dt \equiv E_{fi} \tag{3-35}$$

Finally,

$$\int_{T_b}^{T_f} y_{i1}(t)\ y_{i2}(t)\ dt$$

$$= \int_{T_b}^{T_f} 2f_i^2(t)\ \cos(\omega_c t+\phi_i(t)+\delta)\ \sin(\omega_c t+\phi_i(t)+\delta)\ dt$$

$$= \int_{T_b}^{T_f} f_i^2(t)\ \sin\left[2(\omega_c t+\phi_i(t)+\delta)\right] dt \approx 0 \qquad (3\text{-}36)$$

We also define

$$\rho_{ij} \equiv \frac{1}{(E_{fi}\ E_{fj})^{1/2}} \int_{T_b}^{T_f} f_i(t)\ f_j(t)\ dt\ ;\ \Rightarrow \rho_{ii} = 1 \qquad (3\text{-}37)$$

Later, we will encounter

$$\int_{T_b}^{T_f} y_{i1}(t)\ y_{m1}(t)\ dt$$

$$= \int_{T_b}^{T_f} 2f_i(t)f_m(t)\ \cos[\omega_c t+\phi_i(t)+\delta]\ \cos[\omega_c t+\phi_m(t)+\delta]\ dt$$

$$= \int_{T_b}^{T_f} f_i(t)f_m(t)\cos[\phi_i(t)-\phi_m(t)]dt$$

$$+ \int_{T_b}^{T_f} f_i(t)f_m(t)\ \cos[2\omega_c t+\phi_i(t)+\phi_m(t)+2\delta]\ dt \qquad (3\text{-}38)$$

The second integral in this expression is clearly insignificant, whereas, the first integral involves

$$\mathrm{Re}\left[\int_{T_b}^{T_f} f_i(t)\, e^{j\phi_i(t)}\, f_m(t)\, e^{-j\phi_m(t)}\, dt\right] \equiv \xi_{im} \tag{3-39}$$

which may not be zero even for $i \neq m$. Furthermore,

$$\int_{T_b}^{T_f} y_{i2}(t)\; y_{m2}(t)\; dt$$

$$= \int_{T_b}^{T_f} f_i(t) f_m(t) \cos[\phi_i(t) - \phi_m(t)]\, dt$$

$$- \int_{T_b}^{T_f} f_i(t) f_m(t) \cos[2\omega_c t + \phi_i(t) + \phi_m(t) + 2\delta]\; dt \;\approx\; \xi_{im} \tag{3-40}$$

Also,

$$\int_{T_b}^{T_f} y_{i1}(t)\; y_{m2}(t)\; dt$$

$$= \int_{T_b}^{T_f} f_i(t) f_m(t) \sin[\phi_m(t) - \phi_i(t)]\; dt$$

$$+ \int_{T_b}^{T_f} f_i(t) f_m(t) \sin[2\omega_c t + \phi_i(t) + \phi_m(t) + 2\delta]\; dt \;\approx\; \beta_{im} \tag{3-41}$$

where

$$\int_{T_b}^{T_f} f_i(t) f_m(t) \sin[\phi_m(t) - \phi_i(t)]\ dt \quad \equiv \quad \beta_{im} \tag{3-42}$$

C. THE DETECTION PROBLEM

In the M-ary hypothesis testing problem, the received signal r(t) is modeled by

$$r(t) = s_i(t) + n(t) \tag{3-43}$$

where $i = 1,2,\ldots,M$, $T_b \leq t \leq T_f$, and n(t) is the Additive White Gaussian Noise (AWGN) of Power Spectral Density (PSD) level $N_o/2$ Watts/Hz. If $s_i(t)$ is a completely known signal with probability P_i of being transmitted, then the optimum receiver must compute

$$l_i \equiv e^{\ln(P_i)} \exp\left[\frac{2}{N_0} \int_{T_b}^{T_f} r(t)\ s_i(t)\ dt - \int_{T_b}^{T_f} s_i^2(t)\ dt\right] \tag{3-44}$$

for $i=1,2,\ldots,M$, and will decide that $s_m(t)$ was transmitted if

$$l_m > l_i \qquad \forall\ i \neq m \tag{3-45}$$

Since due to multipath, the received signal model is

$$s_i(t) = \sum_{k=1}^{2} a_k\ y_{ik}(t) \tag{3-46}$$

for $i = 1,2,\ldots,M$, and $T_b \le t \le T_f$, then conditioned on the random variables a_k, $k=1,2$,

$$l_i | a_1, a_2 = e^{\ln(P_i)} \exp\left[\frac{2}{N_0} \sum_{k=1}^{2} a_k R_{ik} - \frac{1}{N_0} \sum_{k=1}^{2} E_{fi} a_k^2\right] \tag{3-47}$$

where

$$R_{ik} \equiv \int_{T_b}^{T_f} r(t)\, y_{ik}(t)\, dt \tag{3-48}$$

and the simplifying condition (see Equations 3-38 and 3-40)

$$\int_{T_b}^{T_f} y_{ik}(t)\, y_{in}(t)\, dt = \begin{cases} 0 & n \neq k \\ E_{fi} & n = k \end{cases} \tag{3-49}$$

has been used in Equation 3-48.

Using the previously derived joint p.d.f. for a_1 and a_2,

$$\begin{aligned} l_i &= \iint_{-\infty}^{\infty} l_i | a_1, a_2 \; f_{A_1, A_2}(a_1, a_2)\, da_1\, da_2 \\ &= e^{\ln(P_i)} \int_{-\infty}^{\infty} \exp\left[-\frac{E_{fi}}{N_0} a_1^2 + \frac{2}{N_0} R_{i1} a_1 - \frac{(a_1 - \alpha)^2}{2\sigma^2}\right] \frac{da_1}{\sqrt{2\pi\sigma^2}} \\ &\quad \cdot \int_{-\infty}^{\infty} \exp\left[-\frac{E_{fi}}{N_0} a_2^2 + \frac{2}{N_0} R_{i2} a_2 - \frac{a_2^2}{2\sigma^2}\right] \frac{da_2}{\sqrt{2\pi\sigma^2}} \end{aligned} \tag{3-50}$$

We work through the more general (first) integral of Equation 3-50. The exponent, only, is of the form

$$-\left[\frac{E_{fi}}{N_0}a_1^2 - \frac{a_1^2-2a_1\alpha+\alpha^2}{2\sigma^2} - \frac{2}{N_0}R_{i1}a_1\right] = -\left[(\varepsilon_1 a_1-\varepsilon_2)^2 + \varepsilon_3\right] \qquad (3\text{-}51)$$

where

$$\varepsilon_1 \equiv \left[\frac{E_{fi}}{N_0} + \frac{1}{2\sigma^2}\right]^{1/2} \qquad (3\text{-}52)$$

$$\varepsilon_2 \equiv \frac{\dfrac{R_{i1}}{N_0} + \dfrac{\alpha}{2\sigma^2}}{\left[\dfrac{E_{fi}}{N_0} + \dfrac{1}{2\sigma^2}\right]^{1/2}} \qquad (3\text{-}53)$$

$$\varepsilon_3 \equiv \frac{\alpha^2}{2\sigma^2} - \frac{\left[\dfrac{R_{i1}}{N_0} + \dfrac{\alpha}{2\sigma^2}\right]^2}{\dfrac{E_{fi}}{N_0} + \dfrac{1}{2\sigma^2}} \qquad (3\text{-}54)$$

Thus, the first integral is of the form

$$\int_{-\infty}^{\infty} \frac{1}{\sqrt{2\pi\sigma^2}}\, e^{-\{(\varepsilon_1 a_1-\varepsilon_2)^2+\varepsilon_3\}}\, da_1$$

$$= \frac{e^{-\varepsilon_3}}{\sqrt{2\sigma^2}\,\varepsilon_1}\int_{-\infty}^{\infty} e^{-u^2/2}\,\frac{du}{\sqrt{2\pi}} = \frac{e^{-\varepsilon_3}}{\varepsilon_1\sqrt{2\sigma^2}} \qquad (3\text{-}55)$$

where the change of variables

$$\frac{u^2}{2} = \left[\varepsilon_1 a_1 - \varepsilon_2\right]^2 \tag{3-56}$$

has been used in Equation 3-55. We can simplify slightly so the integral in question becomes

$$\frac{1}{\left[1+2\sigma^2\frac{E_{fi}}{N_0}\right]^{1/2}} \exp\left[-\frac{\frac{\alpha^2 E_{fi}}{N_0} - \frac{2\sigma^2 R_{i1}^2}{N_0^2} - \frac{2R_{i1}\alpha}{N_0}}{2\sigma^2\left[\frac{E_{fi}}{N_0} + \frac{1}{2\sigma^2}\right]}\right] \tag{3-57}$$

It is obvious that the second integral yields a similar result with $\alpha = 0$ and R_{i2} in place of R_{i1}, namely

$$\frac{1}{\left[1+2\sigma^2\frac{E_{fi}}{N_0}\right]^{1/2}} \exp\left[-\frac{\frac{R_{i2}^2}{N_0^2}}{\frac{E_{fi}}{N_0} + \frac{1}{2\sigma^2}}\right] \tag{3-58}$$

Thus combining all these results, we have

$$l_i = e^{\ln(P_i)} \frac{1}{\left[1+2\sigma^2\frac{E_{fi}}{N_0}\right]} \exp\left[-\frac{\frac{\alpha^2 E_{fi}}{N_0} - \frac{2\sigma^2 R_{i1}^2}{N_0^2} - \frac{2R_{i1}\alpha}{N_0}}{2\sigma^2\left[\frac{E_{fi}}{N_0} + \frac{1}{2\sigma^2}\right]}\right]$$

$$\cdot \exp\left[-\frac{\frac{R_{i2}^2}{N_0^2}}{\frac{E_{fi}}{N_0} + \frac{1}{2\sigma^2}}\right] \tag{3-59}$$

and since receiver decisions can be based on $\ln(l_i)$ just as well, we have

$$\ln(l_i) = \ln(P_i) - \ln\left[1+\frac{2\sigma^2 E_{fi}}{N_0}\right] - \frac{\alpha^2}{2\sigma^2}$$

$$+ \frac{\left[\frac{R_{i1}}{N_0} + \frac{\alpha}{2\sigma^2}\right]^2 + \frac{R_{i2}^2}{N_0}}{\frac{E_{fi}}{N_0} + \frac{1}{2\sigma^2}} \tag{3-60}$$

Thus the most general receiver structure for the generation of $\ln l_i$ is shown in Figure 3-2.

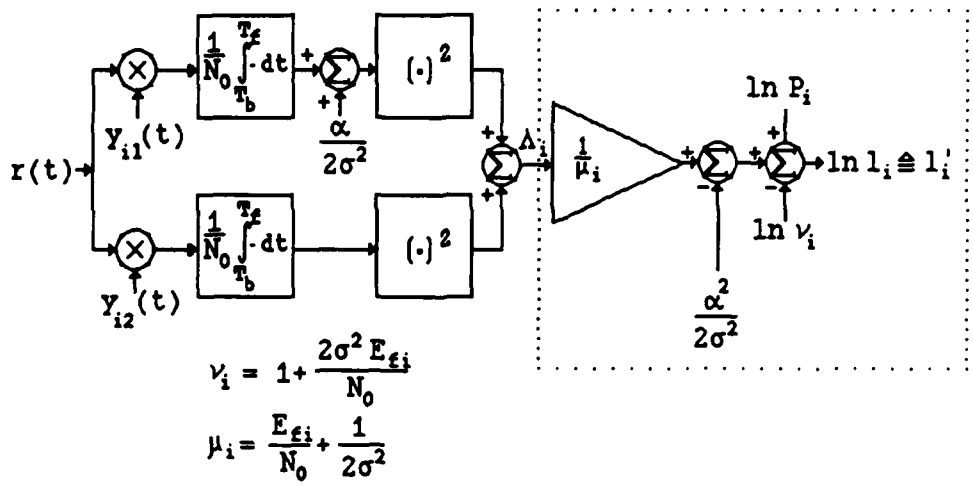

FIGURE 3-2. M-ary Receiver Structure with Rician Fading

Clearly, M structures of (generic) form as shown on Figure 3-2 must be implemented and their outputs compared in size so that a decision can be made based on a modified version of the decision rule of Equation 3-45.

It is obvious that if all signals are equally likely and E_{fi} is independent of the index i, the hardware inside the dotted box shown in Figure 3-2 is unnecessary so that the output from the adder following the squaring devices is sufficient in order to make decisions.

The receiver structure can be modified according to the constraint of a given modulation scheme, such as MFSK or MPSK. Before focusing on the performance of this receiver, it is desirable to investigate what modifications must be made in the receiver structure of Figure 3-2 when δ is modeled

as a random variable. In order to accomplish this, we backtrack somewhat now and define

$$g_i \equiv \ln(P_i) - \ln\left[1 + \frac{2\sigma^2 E_{fi}}{N_0}\right] - \frac{\alpha^2}{2\sigma^2} \tag{3-61}$$

so that

$$\ln(l_i) = g_i + \frac{1}{\mu_i}\left\{\left[\frac{R_{i1}}{N_0} + \frac{\alpha}{2\sigma^2}\right]^2 + \frac{R_{i2}^2}{N_0^2}\right\} \tag{3-62}$$

$$\Rightarrow \quad l_i = e^{g_i} \exp\left\{\frac{1}{\mu_i}\left[\left[\frac{R_{i1}}{N_0} + \frac{\alpha}{2\sigma^2}\right]^2 + \frac{R_{i2}^2}{N_0^2}\right]\right\} \tag{3-63}$$

where, as shown in Figure 3-2,

$$\mu_i = \frac{E_{fi}}{N_0} + \frac{1}{2\sigma^2} \tag{3-64}$$

If δ is a random variable, then l_i as given by Equation 3-63 is actually $l_i|\delta$, a conditional random variable, so that

$$l_i = \int_{-\infty}^{\infty} l_i|\delta \quad f_\Delta(\delta) \quad d\delta$$

$$= e^{g_i} \int_{-\infty}^{\infty} \exp\left\{\frac{1}{\mu_i}\left[\left[\frac{R_{i1}}{N_0} + \frac{\alpha}{2\sigma^2}\right] + \frac{R_{i2}^2}{N_0^2}\right]\right\} \frac{e^{m\cos(\delta)}}{2\pi\ I_0(m)} \quad d\delta \tag{3-65}$$

Now, from Equations 3-48 and 3-30,

$$R_{i1} = \cos\delta \int_{T_b}^{T_f} r(t)\ \sqrt{2}\ f_i(t)\ \cos\left[\omega_c t + \phi_i(t)\right] dt$$

$$- \sin\delta \int_{T_b}^{T_f} r(t)\sqrt{2}\, f_i(t) \sin\left[\omega_c t + \phi_i(t)\right] dt \qquad (3\text{-}66)$$

and with the aid of Equation 3-31,

$$R_{i2} = \cos\delta \int_{T_b}^{T_f} r(t)\ \sqrt{2}\ f_i(t)\ \sin\left[\omega_c t + \phi_i(t)\right] dt$$

$$- \sin\delta \int_{T_b}^{T_f} r(t)\sqrt{2}\, f_i(t) \cos\left[\omega_c t + \phi_i(t)\right] dt \qquad (3\text{-}67)$$

Now, defining

$$r_{ic} \equiv \int_{T_b}^{T_f} r(t)\ \sqrt{2}\ \cos\left[\omega_c t + \phi_i(t)\right] dt \qquad (3\text{-}68)$$

$$r_{is} \equiv \int_{T_b}^{T_f} r(t)\ \sqrt{2}\ \sin\left[\omega_c t + \phi_i(t)\right] dt \qquad (3\text{-}69)$$

then

$$l_i = e^{g_i} \int_{-\infty}^{\infty} \exp\left\{ \frac{1}{\mu_i}\left[\left[\frac{r_{ic}\cos\delta - r_{is}\sin\delta}{N_0} + \frac{\alpha}{2\sigma^2}\right]^2 + \left[\frac{r_{is}\cos\delta - r_{ic}\sin\delta}{N_0}\right]^2\right]\right\}$$

$$\cdot \frac{e^{m\cos(\delta)}}{2\pi\ I_0(m)}\ d\delta \qquad (3\text{-}70)$$

If we examine separately the terms inside the second set of brackets in the exponential of Equation 3-70, after some manipulations we have

$$\frac{r_{ic}^2 + r_{is}^2}{N_0^2} + \frac{2\alpha}{2\sigma^2}\,\frac{r_{ic}\cos\delta - r_{is}\sin\delta}{N_0} + \frac{\alpha^2}{4\sigma^4} \tag{3-71}$$

Thus,

$$l_i = e^{g_i} \exp\left\{ \frac{1}{\mu_i}\left[\frac{r_{ic}^2 + r_{is}^2}{N_0^2} + \frac{\alpha^2}{4\sigma^4}\right]\right\}$$

$$\cdot \int_{-\pi}^{\pi} \exp\left[\frac{2\alpha(r_{ic}\cos\delta - r_{is}\sin\delta)}{2\sigma^2 N_0}\right] \frac{e^{m\cos\delta}}{2\pi\ I_0(m)}\, d\delta \tag{3-72}$$

Reducing the integral only yields

$$\frac{I_0(q_i)}{I_0(m)} \tag{3-73}$$

where

$$q_i = \left[\left[\frac{2\alpha}{2\sigma^2}\,\frac{r_{ic}}{N_0} + m\right]^2 + \left[\frac{2\alpha}{2\sigma^2}\,\frac{r_{is}}{N_0}\right]^2\right]^{1/2} \tag{3-74}$$

Thus,

$$l_i = e^{g_i} \exp\left\{ \frac{1}{\mu_i}\left[\frac{r_{ic}^2 + r_{is}^2}{N_0^2} + \frac{\alpha^2}{4\sigma^2}\right]\right\} \frac{I_0(q_i)}{I_0(m)} \tag{3-75}$$

and

$$\ln l_i = g_i + \frac{1}{\mu_i}\left[\frac{r_{ic}^2 + r_{is}^2}{N_0^2} + \frac{\alpha^2}{4\sigma^4}\right] + \ln I_0(q_i) - \ln I_0(m) \qquad (3\text{-}76)$$

The term $\ln I_0(m)$ cannot possibly affect any decisions, and the term $\ln I_0(q_i)$ can be approximated accurately for small and large arguments of the function. The generation of $\ln l_i$ ignoring the $\ln I_0(m)$ term can be accomplished by the system shown in Figure 3-3.

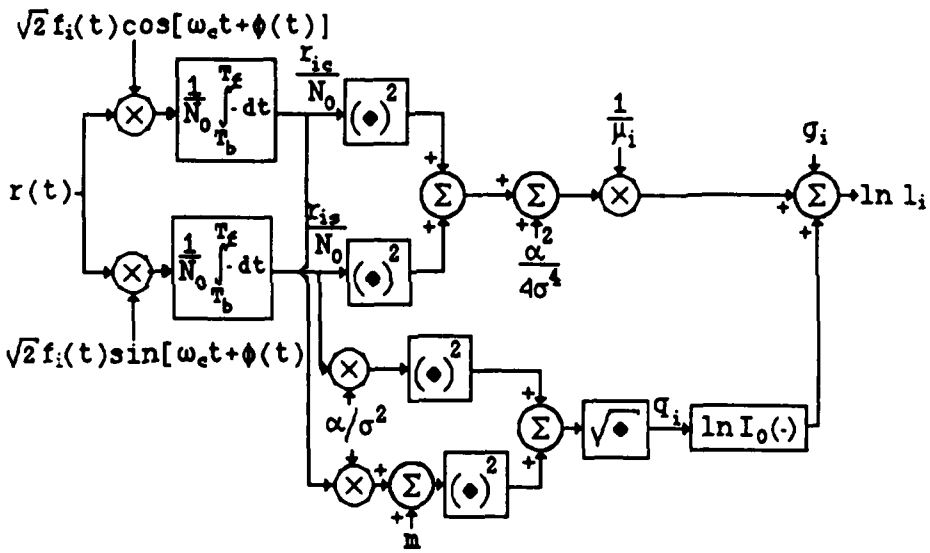

FIGURE 3-3. Receiver Structure with Rician Fading and Random Specular Component

A significant simplification results if $q_i << 1$. If this is the case, then

$$I_0(q_i) \approx \frac{q_i^2}{4} + 1 \qquad (3\text{-}77)$$

$$\Rightarrow \ln I_0(q_i) \approx \frac{q_i^2}{4} \tag{3-78}$$

and

$$\ln l_i \approx g_i + \frac{1}{\mu_i}\left[\frac{r_{ic}^2 + r_{is}^2}{N_o^2} + \frac{\alpha^2}{4\sigma^4}\right] + \frac{1}{4}\left[\frac{2\alpha}{2\sigma^2}\frac{r_{ic}}{N_0} + m\right]^2 + \frac{1}{4}\left[\frac{2\alpha}{2\sigma^2}\frac{r_{is}}{N_0}\right]^2 - \ln I_0(m) \tag{3-79}$$

and after some manipulation,

$$\ln l_i \approx g_i + \left[\frac{1}{\mu_i N_0^2} + \frac{\alpha^2}{4\sigma^4 N_0^2}\right]\left[r_{ic}^2 + \frac{\dfrac{\alpha m}{2\sigma^2 N_0}}{\dfrac{1}{\mu_i N_0^2} + \dfrac{\alpha^2}{4\sigma^4 N_0^2}} r_{ic} + r_{is}^2\right]$$

$$+ \frac{\alpha^2}{4\sigma^2\mu_i} + \frac{m^2}{4} - \ln I_0(m) \tag{3-80}$$

D. RECEIVER PERFORMANCE

In order to evaluate the error probability of the receiver, we assume that $s_m(t)$ is transmitted resulting in l_m' taking on the value L_m. Since

$$l_i' = \frac{\Lambda_i}{\mu_i} + g_i \tag{3-81}$$

we see that

$$\Pr\{c \mid s_m(t), l_m' = L_m\} = \Pr\{l_i' < L_m,\ i \neq m \mid s_m(t), l_m' = L_m\}$$

In evaluating this probability, issues of independence come into question. With the assumed transmitted signal

$$\Lambda_i = \left[\frac{1}{N_0} \int_{T_b}^{T_f} \left[s_m(t) + n(t) \right] y_{i1}(t)\ dt + \frac{\alpha}{2\sigma^2} \right]^2$$

$$+ \left[\frac{1}{N_0} \int_{T_b}^{T_f} \left[s_m(t) + n(t) \right] y_{i2}(t)\ dt \right]^2 \qquad (3\text{-}82)$$

Since

$$s_m(t) = \sum_{k=1}^{2} a_k\ y_{mk}(t) \qquad (3\text{-}83)$$

we have, after some reduction,

$$\Lambda_i = \left[\frac{1}{N_0} \left[a_1 \xi_{im} + a_2 \beta_{im} \right] + \frac{1}{N_0} n_{i1} + \frac{\alpha}{2\sigma^2} \right]^2$$

$$+ \left[\frac{1}{N_0} \left[a_1 \beta_{mi} + a_2 \xi_{im} \right] + \frac{1}{N_0} n_{i2} \right]^2 \qquad (3\text{-}84)$$

where

$$n_{ij} = \int_{T_b}^{T_f} n(t)\ y_{ij}(t)\ dt \qquad j=1,2 \qquad (3\text{-}85)$$

We see that Λ_i is made up of Gaussian random variables that are squared and summed. We can compute the p.d.f. of the component Gaussian elements in order to obtain the p.d.f. of Λ_i. We let

$$b_{i1} = \frac{1}{N_0} \left[a_1 \xi_{im} + a_2 \beta_{im} \right] + \frac{1}{N_0} n_{i1} + \frac{\alpha}{2\sigma^2} \qquad (3\text{-}86)$$

$$b_{2i} = \frac{1}{N_0}\left[a_1\beta_{mi} + a_2\xi_{im}\right] + \frac{1}{N_0} n_{i2} \tag{3-87}$$

Since a_1 and a_2 are both Gaussian random variables with means α and 0 respectively and both with variance σ^2, we have

$$E\{b_{1i}\} = \frac{1}{N_0}\alpha\xi_{im} + \frac{\alpha}{2\sigma^2} \tag{3-88}$$

$$E\{b_{2i}\} = \frac{1}{N_0}\alpha\beta_{mi} \tag{3-89}$$

Also

$$b_{1i}-E\{b_{1i}\} = \frac{1}{N_0}\left[(a_1-\alpha)\xi_{im} + a_2\beta_{im}\right] + \frac{1}{N_0} n_{i1} \tag{3-90}$$

$$b_{2i}- E\{b_{2i}\} = \frac{1}{N_0}\left[(a_1-\alpha)\beta_{mi} + a_2\xi_{im}\right] + \frac{1}{N_0} n_{i2} \tag{3-91}$$

so that

$$E\{[b_{1i}-E\{b_{1i}\}][b_{2i}-E\{b_{2i}\}]\} =$$

$$= \frac{1}{N_0^2} E\{[(a_1-\alpha)\xi_{im} + a_2\beta_{im} + n_{1i}][(a_1-\alpha)\beta_{mi} + a_2\xi_{im} + n_{i2}]\}$$

$$= \frac{1}{N_0^2}\{\sigma^2\xi_{im}\beta_{mi} + \sigma^2\beta_{im}\xi_{im} + E\{n_{1i}\, n_{i2}\}\} \tag{3-92}$$

where the second equality in Equation 3-92 is made possible by the fact that random variables a_1 and a_2 are independent. Since

$$\beta_{mi} = -\beta_{im} \tag{3-93}$$

and

$$E\{n_{1i}\ n_{i2}\} = E\left[\int_{T_b}^{T_f} n(t)\ y_{i1}(t)\ dt \int_{T_b}^{T_f} n(\tau)\ y_{i2}(\tau)\ d\tau\right]$$

$$= \int_{T_b}^{T_f} \frac{N_0}{2}\ y_{i1}(t)\ y_{i2}(t)\ dt \approx 0 \qquad (3\text{-}94)$$

it is clear that b_{1i} and b_{2i} are uncorrelated, and since they are Gaussian random variables, they are statistically independent. Furthermore,

$$\mathrm{var}\{b_{1i}\} = \frac{1}{N_0^2}\sigma^2\ \xi_{im}^2 + \frac{1}{N_0^2}\sigma^2\ \beta_{im}^2 + \frac{1}{N_0^2}\frac{N_0}{2}E_{fi} \equiv \sigma_{bi}^2 \qquad (3\text{-}95)$$

$$\mathrm{var}\{b_{2i}\} = \frac{1}{N_0^2}\sigma^2\ \beta_{mi}^2 + \frac{1}{N_0^2}\sigma^2\ \xi_{im}^2 + \frac{1}{N_0^2}\frac{N_0}{2}E_{fi} \equiv \sigma_{bi}^2 \qquad (3\text{-}96)$$

Observe that $\mathrm{var}\{b_{1i}\}=\mathrm{var}\{b_{2i}\}$ so that the same symbol has been used for both variates. Thus from Whalen [5],

$$f_{\Lambda_i|s_m}(\lambda_i|s_m) = \frac{1}{2\sigma_{bi}^2}\exp\left[-\frac{\lambda_i + m_{bi}}{2\sigma_{bi}^2}\right] I_0\left[\frac{\sqrt{\lambda_i\ m_{bi}}}{\sigma_{bi}^2}\right],\ \lambda_i \geq 0 \qquad (3\text{-}97)$$

where

$$m_{bi} = E^2\{b_{1i}\} + E^2\{b_{2i}\} = \left[\frac{1}{N_0}\alpha\xi_{im} + \frac{\alpha}{2\sigma^2}\right]^2 + \left[\frac{1}{N_0}\alpha\beta_{mi}\right]^2 \qquad (3\text{-}98)$$

Since

$$l_i' = \frac{\Lambda_i}{\mu_i} + g_i \qquad (3\text{-}99)$$

$$f_{l_i'|s_m}(L_i'|s_m) = \frac{1}{\left|\frac{1}{\mu_i}\right|} f_{\Lambda_i|s_m}\left[\frac{L_i' - g_i}{\frac{1}{\mu_i}}\right] \tag{3-100}$$

$$= |\mu_i| \frac{1}{2\sigma_{bi}^2} \exp\left[-\frac{\mu_i(L_i' - g_i) + m_{bi}}{2\sigma_{bi}^2}\right] I_0\left[\frac{\sqrt{\mu_i(L_i' - g_i)m_{bi}}}{\sigma_{bi}^2}\right]$$

$$L_i' \geq g_i \tag{3-101}$$

This obtains only a marginal p.d.f. for l_i'. We want to explore independence issues by considering under similar conditions of $s_m(t)$ transmitted, what correlations exist with other variates b_{1j} and b_{2j}, where

$$b_{1j} = \frac{1}{N_0}\{a_1\xi_{jm} + a_2\beta_{jm}\} + \frac{1}{N_0} n_{j1} + \frac{\alpha}{2\sigma^2} \tag{3-102}$$

$$b_{2j} = \frac{1}{N_0}\{a_1\beta_{mj} + a_2\xi_{jm}\} + \frac{1}{N_0} n_{j2} \tag{3-103}$$

Clearly,

$$E\{b_{1j}\} = \frac{1}{N_0}\alpha\xi_{jm} + \frac{\alpha}{2\sigma^2} \tag{3-104}$$

$$E\{b_{2j}\} = \frac{1}{N_0}\alpha\beta_{mj} \tag{3-105}$$

$$b_{1j} - E\{b_{1j}\} = \frac{1}{N_0}\{(a_1 - \alpha)\xi_{jm} + a_2\beta_{jm}\} + \frac{1}{N_0} n_{j1} \tag{3-106}$$

$$b_{2j} - E\{b_{2j}\} = \frac{1}{N_0}\{(a_1 - \alpha)\beta_{mj} + a_2\xi_{jm}\} + \frac{1}{N_0} n_{j2} \tag{3-107}$$

Now,

$$E\{[b_{1i}-E\{b_{1i}\}][b_{1j}-E\{b_{1j}\}]\} =$$

$$= \frac{1}{N_0^2} E\{[(a_1-\alpha)\xi_{im}+a_2\beta_{im}+n_{i1}][(a_1-\alpha)\xi_{jm}+a_2\beta_{jm}+n_{j1}]\} \tag{3-108}$$

$$= \frac{1}{N_0^2} [\sigma^2\xi_{im}\xi_{jm}+\sigma^2\beta_{im}\beta_{jm}+E\{n_{i1}\ n_{j1}\}] \tag{3-109}$$

Since

$$E\{n_{i1}\ n_{j1}\} = E\left[\int_{T_b}^{T_f} n(t)\ y_{i1}(t)\ dt \int_{T_b}^{T_f} n(\tau)\ y_{j1}(\tau)\ d\tau\right] \tag{3-110}$$

$$= \frac{N_0}{2}\int_{T_b}^{T_f} y_{i1}(t)\ y_{j1}(t)\ dt = \frac{N_0}{2}\xi_{ij} \tag{3-111}$$

Thus,

$$E\{[b_{1i}-E\{b_{1i}\}][b_{1j}-E\{b_{1j}\}]\} = \frac{1}{N_0^2}\left[\sigma^2(\xi_{im}\xi_{jm}+\beta_{im}\beta_{jm})+\frac{N_0}{2}\xi_{ij}\right] \tag{3-112}$$

which in general does not appear to be zero. Unless certain orthogonality assumptions are made, it appears that this expectation cannot be zero. Now,

$$E\{[b_{1i}-E\{b_{1i}\}][b_{2j}-E\{b_{2j}\}] =$$

$$= \frac{1}{N_0^2} E\{[(a_1-\alpha)\xi_{im}+a_2\beta_{im}+n_{i1}][(a_1-\alpha)\beta_{mj}+a_2\xi_{jm}+n_{j2}]\} \tag{3-113}$$

$$= \frac{1}{N_0^2} [\sigma^2\xi_{im}\beta_{mj}+\sigma^2\beta_{im}\ \xi_{jm}+E\{n_{i1}\ n_{j2}\}] \tag{3-114}$$

Since

$$E\{n_{i1}\ n_{j2}\} = E\left[\int_{T_b}^{T_f} n(t)\ y_{i1}(t)\ dt \int_{T_b}^{T_f} n(\tau)\ y_{j2}(\tau)\ d\tau\right] \tag{3-115}$$

$$= \frac{N_0}{2}\int_{T_b}^{T_f} y_{i1}(t)\ y_{j2}(t)\ dt = \frac{N_0}{2}\beta_{ij} \tag{3-116}$$

we have

$$E\{[b_{1i} - E\{b_{1i}\}][b_{2j} - E\{b_{2j}\}]\} = \frac{1}{N_0^2}[\sigma^2(\xi_{im}\beta_{mj} + \beta_{im}\xi_{jm}) + \frac{N_0}{2}\beta_{ij}] \tag{3-117}$$

Similarly, interchanging the indices i and j in Equation 3-117, we obtain

$$E\{[b_{2i} - E\{b_{2i}\}][b_{1j} - E\{b_{1j}\}]\} = \frac{1}{N_0^2}[\sigma^2(\xi_{jm}\beta_{mi} + \beta_{jm}\xi_{im}) + \frac{N_0}{2}\beta_{ji}] \tag{3-118}$$

F y,

$$E\{[b_{2i} - E\{b_{2i}\}][b_{2j} - E\{b_{2j}\}]\} =$$

$$\frac{1}{N_0^2}E\{[(a_1-\alpha)\beta_{mi} + a_2\xi_{im} + n_{i2}][(a_1-\alpha)\beta_{mj} + a_2\xi_{jm} + n_{j2}]\} \tag{3-119}$$

$$= \frac{1}{N_0^2}[\sigma^2\beta_{mi}\beta_{mj} + \sigma^2\xi_{im}\xi_{jm} + E\{n_{i2}\ n_{j2}\}] \tag{3-120}$$

Since,

$$E\{n_{i2}\ n_{j2}\} = \frac{N_0}{2}\int_{T_b}^{T_f} y_{i2}(t)\ y_{j2}(t)\ dt = \frac{N_0}{2}\xi_{ij} \tag{3-121}$$

we have

$$E\{[b_{2i} - E\{b_{2i}\}][b_{2j} - E\{b_{2j}\}]\} = \frac{1}{N_0^2}[\sigma^2(\beta_{mi}\beta_{mj} + \xi_{im}\xi_{jm}) + \frac{N_0}{2}\xi_{ij}] \qquad (3\text{-}122)$$

It appears that unless some special cases are considered, there is some correlation amongst all the random variables making up l_i' and l_j' conditioned on the transmission of $s_m(t)$.

Since the l_j' cannot be demonstrated to be independent, we can see that

$$Pr\{l_1'<L_m,\ l_2'<L_m, \ldots, l_{m-1}'<L_m,\ l_{m+1}'<L_m, \ldots, l_M'<L_m | s_m(t), l_m'=L_m\}$$

can only be approximated by

$$\prod_{i=1,\ i\neq m}^{M} Pr\{l_i' < L_m \mid s_m(t),\ l_m' = L_m\} \qquad (3\text{-}123)$$

where Equation 3-123 is an exact result if and only if the random variables l_i' can be proved to be statistically independent. Therefore

$$Pr\{c|s_m(t),\ l_m' = L_m\} \approx$$

$$\prod_{i=1,\ i\neq m}^{M} \int_{-\infty}^{\infty} |\mu_i| \frac{1}{2\sigma_{bi}^2} \exp\left[\frac{-\mu_i(L_i - g_i) + m_{bi}}{2\sigma_{bi}^2}\right] I_0\left[\frac{\sqrt{\mu_i(L_i - g_i)m_{bi}}}{\sigma_{bi}^2}\right]$$

$$\cdot\ u(L_i - g_i)\ dL_i \qquad (3\text{-}124)$$

From this we obtain,

$$Pr\{c|s_m(t)\} = \int_{-\infty}^{\infty} Pr\{c|s_m(t),\ l_m' = L_m\}\ f_{l_m'|s_m}(L_m|s_m)\ dL_m \qquad (3\text{-}125)$$

And finally,

$$\Pr\{c\} = \sum_{m=1}^{M} P_m \Pr\{c|s_m(t)\} \tag{3-126}$$

While the result is somewhat complicated, simplifications can be introduced on the terms that make up the given mathematical expressions.

E. SIGNAL POWERS

Equation 3-2 gives an expression for the signal. The specular component of this signal is

$$s_{i,S}(t) \equiv \sqrt{2}\ \alpha\ f_i(t)\ \cos[\omega_c t + \phi_i(t) + \delta] \tag{3-127}$$

The energy of this specular component is found by integrating Equation 3-127 with respect to time over the symbol duration, T_s, yielding

$$E_S \equiv \alpha^2\ E_{fi} \tag{3-128}$$

The diffuse component of the signal is given by

$$s_{i,D}(t) \equiv \sqrt{2}\ v\ f_i(t)\ \cos[\omega_c t + \phi_i(t) + \theta] \tag{3-129}$$

Fixing v and θ, the energy of the diffuse component is $v^2\ E_{fi}$. To find the average energy of the diffuse component, we average this expression using the p.d.f. of the r.v. v, to obtain

$$E_D \equiv 2\ \sigma^2\ E_{fi} \tag{3-130}$$

We now define specular Signal-to-Noise Ratio (SNR) to be

$$SNR_S \equiv \frac{\alpha^2 E}{N_0} \tag{3-131}$$

and the diffuse SNR,

$$SNR_D \equiv \frac{2\,\sigma^2 E}{N_0} \tag{3-132}$$

where for simplicity we will henceforth use the term E to represent signal energy in place of E_{fi}, since the signals being considered in the sequel have energies E_{fi} that are independent of the index "i."

Thus, taking the ratio of specular energy (or power) to diffuse energy (or power), we obtain

$$\frac{SNR_S}{SNR_D} = \frac{\alpha^2}{2\sigma^2} \tag{3-133}$$

1. MFSK

For M-ary Frequency Shift Keyed modulation, the signals take on the mathematical form

$$f_i(t) = \sqrt{\frac{E}{T_s}} \qquad i=1,2,\ldots,M \;;\; T_s \equiv T_f - T_b \tag{3-134}$$

$$\phi_i(t) = \left[i - \frac{M}{2}\right] \Delta\omega t \qquad i=i,2,\ldots,M \tag{3-135}$$

As a result of this,

$$\int_{T_b}^{T_f} s_{i,T}(t)\ s_{j,T}(t)\ dt =$$

$$\int_{T_b}^{T_f} \sqrt{\frac{2E}{T_s}} \cos\left[\omega_c t + \left(i - \frac{M}{2}\right) \Delta\omega t\right]$$

$$\cdot \sqrt{\frac{2E}{T_s}} \cos\left[\omega_c t + \left(j - \frac{M}{2}\right) \Delta\omega t\right] dt$$

$$= \frac{E}{T_s} \int_{T_b}^{T_f} \cos\left[(i-j)\ \Delta\omega t\right] dt +$$

$$+ \frac{E}{T_s} \int_{T_b}^{T_f} \cos\left[2\omega_c t + \Delta\omega t \left(i - \frac{M}{2}\right) + \Delta\omega t \left(j - \frac{M}{2}\right)\right] dt \qquad (3\text{-}136)$$

The second integral in Equation 3-136 is clearly negligible regardless of value for $\Delta\omega$, so that

$$\int_{T_b}^{T_f} s_{i,T}(t)\ s_{j,T}(t)\ dt$$

$$= E\ \frac{\sin(i-j)\ \Delta\omega T_s/2}{(i-j)\ \Delta\omega T_s/2} \cdot \frac{\cos(i-j)\ \Delta\omega(T_b+T_f)}{2} \qquad (3\text{-}137)$$

We will choose

$$\frac{\Delta\omega T_s}{2} = n\ \pi \quad \Rightarrow \quad \Delta f = \frac{n}{T_s} \qquad (3\text{-}138)$$

where n is an integer because this choice guarantees that the transmitted signals are orthogonal. Under these conditions we have

$$\int_{T_b}^{T_f} y_{i1}^2(t)\ dt = E = \int_{T_b}^{T_f} y_{i2}^2(t)\ dt \quad ;\ \forall\ i \tag{3-139}$$

For this modulation scheme with the assumption of Equation 3-138, we have

$$\xi_{im} = \int_{T_b}^{T_f} \frac{E}{T_s} \cos\left[\left(i - \frac{M}{2}\right) \Delta\omega t - \left(m - \frac{M}{2}\right) \Delta\omega t \right] dt = 0 \ ;\ i \neq m \tag{3-140}$$

$$\beta_{im} = \int_{T_b}^{T_f} \frac{E}{T_s} \sin\left[\left(m - \frac{M}{2}\right) \Delta\omega t - \left(i - \frac{M}{2}\right) \Delta\omega t \right] dt \tag{3-141}$$

and after some reduction,

$$\beta_{im} = E\ \frac{\sin(m-i)\ \Delta\omega T_s/2}{(m-i)\ \Delta\omega T_s/2}\ \frac{\sin(m-i)\ \Delta\omega(T_b + T_f)}{2} \tag{3-142}$$

Clearly for $i \neq m$, we will have $\beta_{im}=0$, thus eliminating many of the terms involving ξ_{im} and β_{im} in the result for receiver performance previously derived.

Now, from the above results, since $\beta_{im} = \xi_{im} = 0$ for $i \neq m$, Equation 3-98 yields

$$m_{bi} = \left[\frac{\alpha}{2\sigma^2}\right]^2 \qquad \forall\ i \neq m \tag{3-143}$$

and Equation 3-95 yields

$$\sigma_{bi}^2 = \frac{E}{2N_0} \qquad \forall\ i \neq m \tag{3-144}$$

In order to obtain the probability of correct (Pr{c}), we must first evaluate $Pr\{c|s_m(t),\ l_m' = L_m\}$ as provided in Equation 3-124, as follows.

$$\prod_{i=1,\, i\neq m}^{M} \int_{-\infty}^{L_m - g_i} \frac{|\mu_i|}{2\sigma_{bi}^2}\, e^{-(\mu_i x + m_{bi})/2\sigma_{bi}^2}\, I_0\left[\frac{\sqrt{\mu_i x m_{bi}}}{\sigma_{bi}^2}\right] u(x)\ dx$$

$$= \prod_{i=1,\, i\neq m}^{M} \left[1 - \int_{\sqrt{\mu_i (L_m - g_i)\sigma_{bi}^2}}^{\infty} y\, e^{-(y^2 - \zeta_i^2)}\, I_0(y\ \zeta_i)\ dy \right] \tag{3-145}$$

where the change of variables

$$y = \sqrt{\frac{\mu_i x}{\sigma_{bi}^4}} \tag{3-146}$$

has been made in Equation 3-145.

The term contained within the integral of Equation 3-145 is now clearly a Rician function, where, for convenience, we have defined

$$\zeta_i = \sqrt{\frac{m_{bi}}{\sigma_{bi}^2}} \tag{3-147}$$

The integral of a Rician in this form is known as a Marcum Q-Function and in its general form is defined as

$$Q(A,B) = \int_B^{\infty} y\, e^{-\frac{y^2+A^2}{2}}\, I_0(Ay)\, dy \qquad (3\text{-}148)$$

To reduce each small term in Equation 3-145 into forms dealing with the SNR's previously defined, we make use of the above results and Equation 3-64. Taking terms within Equation 3-145, we obtain,

$$\frac{m_{bi}}{\sigma_{bi}^2} = \frac{2\ SNR_S}{SNR_D^2} \equiv \zeta_i^2 \qquad \forall\ i \qquad (3\text{-}149)$$

$$\frac{m_{bi}}{\mu_i} = \frac{SNR_S}{SNR_D(SNR_D+1)} \qquad \forall\ i \qquad (3\text{-}150)$$

$$\frac{\mu_i}{\sigma_{bi}^2} = 2 + \frac{2}{SNR_D} \qquad \forall\ i \qquad (3\text{-}151)$$

$$g_i = \ln P_i - \ln(1+SNR_D) - \frac{SNR_S}{SNR_D} \qquad \forall\ i \qquad (3\text{-}152)$$

each of which will be substituted later. For equiprobable signals, the subscript "i" in Equation 3-152 disappears, and

$$P_i = \frac{1}{M} \qquad \forall\ i \qquad (3\text{-}153)$$

The probability of correct decisions for MFSK is now obtained by applying Equations 3-125 and 3-126. Equation 3-125 contains the p.d.f. for the random variable l_m' given $s_m(t)$ transmitted, as shown in Equation 3-101. The parameters contained in this equation all have the subscript

m, which makes them different than the parameters we used earlier when the subscript was i with $i \neq m$. Reducing these parameters in this form, we have

$$\mu_m = \frac{1}{2\sigma^2} (SNR_D+1) \tag{3-154}$$

$$\sigma_{bm}^2 = \frac{E}{2N_0} (SNR_D+1) \tag{3-155}$$

$$m_{bm} = \frac{1}{\alpha^2} \frac{SNR_S^2}{SNR_D^2} (SNR_D+1) \tag{3-156}$$

$$g_m = \ln P_m - \ln(1+SNR_D) - \frac{SNR_S}{SNR_D} \tag{3-157}$$

where, again, the subscript "m" can be removed for equiprobable signals, and P_m is simply M^{-1}.

Manipulating the above expressions into forms more useful for substitution into Equations 3-125 and 3-126,

$$\frac{\mu_m}{\sigma_{bm}^2} = \frac{2}{SNR_D} \tag{3-158}$$

$$\frac{m_{bm}}{\sigma_{bm}^2} = \frac{2SNR_S(1+SNR_D)}{SNR_D^2} \equiv \zeta_m \tag{3-159}$$

$$\frac{\mu_i \, \sigma_{bm}^2}{\sigma_{bi}^2 \, \mu_m} = 1 + SNR_D \tag{3-160}$$

Thus, upon substitution, the p.d.f. of Equation 3-125 yields

$$f_{l_m'|s_m}(L_m|S_m) = \frac{1}{SNR_D} \exp\left[-\frac{L_m-g}{SNR_D} - \frac{SNR_S}{SNR_D^2}\right]$$

$$\cdot\ I_0\left[\sqrt{\frac{4\ (L_m-g)}{SNR_S\ SNR_D}}\right] \qquad (3\text{-}161)$$

Expressing Equation 3-126 in its final form in order to obtain the total probability of correct decisions, we have

$$Pr\{c\} = \int_0^\infty \left[1 - Q\left\{\frac{2SNR_S}{SNR_D^2},\ \sqrt{1+SNR_D}\ z\right\}\right]^{M-1}$$

$$\cdot\ z\ e^{-\frac{1}{2}\left[\frac{z^2+2SNR_S(1+SNR_D)}{SNR_D^2}\right]}\ I_0\left[z\sqrt{\frac{2SNR_S(1+SNR_D)}{SNR_D^2}}\right] dz \qquad (3\text{-}162)$$

where the substitution

$$z^2 = (L_m - g)\ \frac{\mu_m}{\sigma_{bm}^2} \qquad (3\text{-}163)$$

has been used in order to obtain this result. The probability of error (P{e}) is now obtained by subtracting from unity the P{c} shown in Equation 3-162.

2. MPSK

For M-ary Phase Shift Keyed modulation, the signals take on the mathematical form

$$f_i(t) = \sqrt{\frac{E}{T_s}} \qquad i=1,2,\ldots,M\ ;\quad T_s = T_f - T_b \qquad (3\text{-}164)$$

$$\phi_i(t) = \frac{2\pi i}{M} + \phi_0 \qquad i=1,2,\ldots,M \tag{3-165}$$

where ϕ_0 is a fixed yet arbitrary phase.

The signals $s_{i,T}(t)$ now will clearly not be orthogonal. However,

$$\int_{T_b}^{T_f} y_{i1}^2(t)\ dt = \int_{T_b}^{T_f} y_{i2}^2(t)\ dt = E \qquad \forall\ i \tag{3-166}$$

and for this modulation scheme,

$$\xi_{im} = E\ \cos\left[\frac{2\pi(i-m)}{M}\right] \tag{3-167}$$

Also,

$$\beta_{im} = E\ \sin\left[\frac{2\pi(i-m)}{M}\right] \tag{3-168}$$

Clearly in this case, none of the terms involving ξ_{im} and β_{im} will cancel out as they did in the MFSK case. After some reductions,

$$m_{bi} = \left[\frac{SNR_S}{\alpha\ SNR_D}\right]^2 \left[SNR_D^2 + SNR_D\ \cos\left[\frac{2\pi(i-m)}{M}\right] + 1\right] \tag{3-169}$$

$$\sigma_{bi}^2 = \frac{E\ SNR_D}{2N_0} \tag{3-170}$$

Thus,

$$\frac{m_{bi}}{\sigma_{bi}^2} = \frac{2\ SNR_S}{SNR_D^2}\left[SNR_D + \cos\left[\frac{2\pi(i-m)}{M}\right] + \frac{1}{SNR_D}\right] \tag{3-171}$$

$$\frac{m_{bi}}{\mu_i} = \frac{SNR_S}{SNR_D+1}\left[SNR_D + \cos\left[\frac{2\pi(i-m)}{M}\right] + \frac{1}{SNR_D}\right] \tag{3-172}$$

$$\frac{\mu_i}{\sigma_{bi}^2} = \frac{2(SNR_D+1)}{SNR_D^2} \tag{3-173}$$

$$\frac{m_{bi}}{\sigma_{bi}^2} - \frac{m_{bi}}{\mu_i} = \left[\frac{2\ SNR_S}{SNR_D^2} - \frac{SNR_S}{SNR_D+1}\right] \cdot \left[SNR_D + \cos\left[\frac{2\pi(i-m)}{M}\right] + \frac{1}{SNR_D}\right] \tag{3-174}$$

And so, for MPSK,

$$\Pr\{c|s_m(t), l_m'=L_m\} = \prod_{i=1, i\neq m}^{M} e^{-\frac{1}{2}\left[\frac{2SNR_S}{SNR_D^2} - \frac{SNR_S}{SNR_D+1}\right]\cdot\left[SNR_D+\cos\left[\frac{2\pi(i-m)}{M}\right]+\frac{1}{SNR_D}\right]}$$

$$\cdot \left\{ 1 - \int_{\frac{\sqrt{2(SNR_D+1)(L_m-g_i)}}{SNR_D}}^{\infty} y\ e^{-\frac{1}{2}\left\{ y^2 + \frac{SNR_S}{SNR_D+1}\left[SNR_D+\cos\left[\frac{2\pi(i-m)}{M}\right]+\frac{1}{SNR_D}\right]\right\}} \right.$$

$$\left. \cdot\ I_0\left[\sqrt{\frac{SNR_S}{SNR_D+1}\left[SNR_D+\cos\left[\frac{2\pi(i-m)}{M}\right]+\frac{1}{SNR_D}\right]}\ y\right] dy \right\}$$

$$= \prod_{i=1, i\neq m}^{M} e^{-\frac{C_{im}-A_{im}}{2}} \left\{1 - Q(A_{im}, B_m)\right\} \tag{3-175}$$

where we have defined for convenience

$$A_{im} = \frac{SNR_S}{SNR_D+1}\left[SNR_D + \cos\left[\frac{2\pi(i-m)}{M}\right] + \frac{1}{SNR_D}\right] \tag{3-176}$$

$$B_m = \frac{\sqrt{2(SNR_D+1)(L_m-g)}}{SNR_D} \tag{3-177}$$

$$C_{im} = \frac{2SNR_S}{SNR_D^2}\left\{SNR_D + \cos\left[\frac{2\pi(i-m)}{M}\right] + \frac{1}{SNR_D}\right\} \tag{3-178}$$

Now, using this notation, the p.d.f. of Equation 3-101 reduces to

$$f_{l_m'|s_m}(L_m|S_m) = \frac{SNR_D+1}{SNR_D^2}\, e^{-\frac{B_m^2 - C_{mm}}{2}}\, I_0\left\{\sqrt{\frac{B_m^2 C_{mm}}{2}}\right\} \tag{3-179}$$

Expressing Equation 3-126 in its final form in order to obtain the total probability of correct decisions for the MPSK modulation scheme, we have

$$Pr\{c\} = \sum_{m=1}^{M} P_m \int_{-\infty}^{\infty} \prod_{i=1,\, i\neq m}^{M} e^{-\frac{C_{im}-A_{im}}{2}} \left\{1 - Q(A_{im}\,,\, B_{im})\right\}$$

$$\cdot \frac{SNR_D+1}{SNR_D^2}\, e^{-\frac{B_m^2 - C_{mm}}{2}}\, I_0\left[\sqrt{\frac{B_m^2\, C_{mm}}{2}}\right] dB_m \tag{3-180}$$

The final results on receiver performance for MFSK and MPSK can now be directly applied to a Rician fading

problem. The determination of the fading parameters that identify the variables SNR_S and SNR_D must be determined either through computer simulation or experimentation with a model of the reflecting structures.

This last aspect of the problem has been left for further study as it applies to the design of the Space Station digital communications links, since accurate determination of the fading parameters was not feasible given the scope of this study.

IV. ANALYSIS OF ISI EFFECTS ON M-ARY RECEIVERS WITH FIXED MULTIPATH

In the previous chapter, it was assumed that multipath interference resulted in signal fading effects causing degradation in the performance of digital receivers. A Rician fading model was used as a generalization of Rayleigh fading to encompass more realistic multipath scenarios.

In this chapter analysis will be carried out in order to determine how a single bit, delayed by multipath propagation and thus causing Intersymbol Interference (ISI), affects receiver performance. This different approach, no less powerful, may be more relevant to certain multipath scenarios.

We analyze here the performance of a receiver which is optimum for for deciding which one of M possible signals was transmitted, using the following received signal model:

$$r(t) = s_i(t) + n(t) \qquad t_0 \le t \le T_s + t_0 \quad ; \quad i=1,2,\ldots,M \qquad (4\text{-}1)$$

where T_S is the symbol duration, $s_i(t)$ is a deterministic signal, and $n(t)$ is once again the AWGN of PSD level $N_0/2$ Watts/Hz.

The receiver which is optimum for this problem is shown in Figure 4-1.

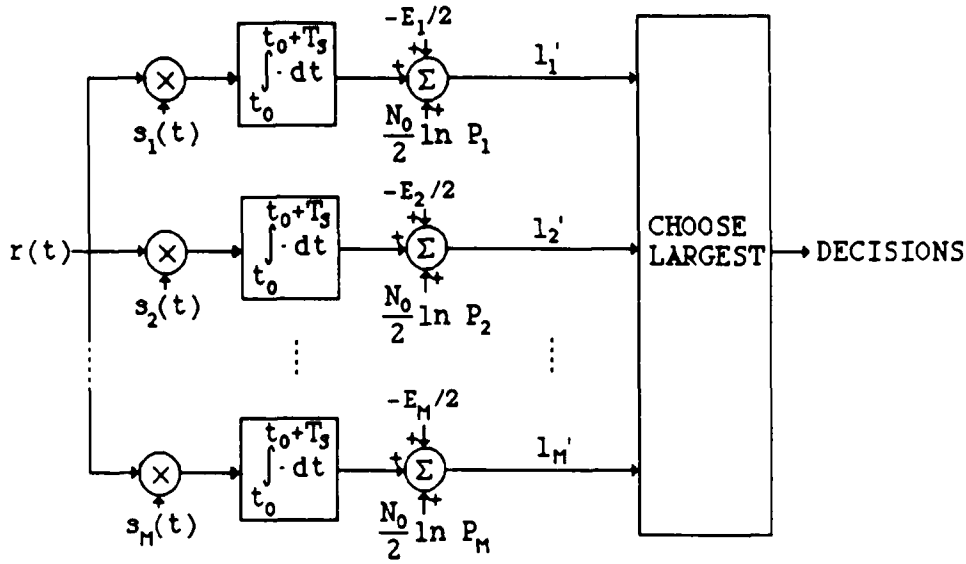

FIGURE 4-1. Optimum M-ary Receiver Configuration, No ISI

It is now intended to derive the performance of this receiver when multipath is present so as to introduce transmission delays not to exceed one symbol time. The direct-ray path signal will be assumed to have zero delay so all multipath contributions will have delays referenced to the delay of the direct-ray path signal. For mathematical simplicity, let $t_0=0$ and assume that $s_j(t)$ is transmitted. Then, in the absence of multipath,

$$r(t) = s_j(t) + n(t) \qquad 0 \le t \le T_s \qquad (4\text{-}2)$$

Consider the effect of multipath now. We introduce the following notation

$$s_j(t;\alpha,N,\tau) = \sum_{n=1}^{N} \alpha_n \, s_j(t-\tau_n) \qquad (4\text{-}3)$$

$$j = 1,2,\ldots,M \qquad \alpha_n \geq 0 \qquad \tau_n \geq 0$$

where there are N secondary ray paths available at the present symbol time during which the signal travels from the transmitter to the receiver, and α_n and τ_n are the strengths and delays respectively of the signal which arrives via these secondary paths.

If $s_j(t)$ is transmitted, with multipath present,

$$r(t) = s_j(t) + s_j(t;\alpha,N,\tau) + s_k(t+T;\ \beta,L,\eta) + n(t) \qquad (4\text{-}4)$$

where $0 \leq t \leq T$, $j=1,2,\ldots,M$, and $k=1,2,\ldots,M$. Equation 4-4 assumes that in the previous symbol time, the symbol $s_k(t)$ was transmitted during which there were L secondary ray paths, with strengths $\beta_1, \beta_2, \ldots, \beta_L$ and corresponding delays $\eta_1, \eta_2, \ldots, \eta_L$. Note that L does not necessarily equal N, α_n does not necessarily equal β_n, and τ_n does not necessarily equal η_n. Note that since for the previously transmitted symbol to arrive at the receiver at the same time as the currently transmitted symbol, the latter symbol would have to have taken a different path, so the attenuating and delay factors corresponding to the current and previous symbol in all likelihood may not be equal.

In all analysis, since τ represents the delay of the current bit and η represents the delay of the previous bit, we will assume

$$\tau_1 \leq \tau_2 \leq \ldots \leq \tau_N \qquad ; \qquad 0 \leq \tau_n \leq T_n$$

$$\eta_1 \leq \eta_2 \leq \ldots \eta_L \qquad ; \qquad T \leq \eta_1 \leq 2T_n$$

To consider a very specific case, let us assume that we are dealing with a modulation scheme in which all signals have equal energy and equal probability of being transmitted, namely

$$E_i \equiv \int_0^T s_i^2(t)\ dt = E \qquad \forall\ i \qquad (4\text{-}5)$$

$$P_i = \frac{1}{M} \qquad \forall\ i \qquad (4\text{-}6)$$

where T will henceforth be used to express the symbol duration, T_S, and the signal set is orthogonal, that is

$$\int_0^T s_i(t)\ s_j(t)\ dt = E\ \delta_{ij} \qquad \forall\ i,j \qquad (4\text{-}7)$$

Thus, assume that $s_j(t)$ is transmitted, $s_k(t)$ was previously transmitted, and define (see Figure 4-1)

$$l_i \equiv \int_0^T r(t)\ s_i(t)\ dt \qquad \forall\ i \qquad (4\text{-}8)$$

Under the assumed conditions, the probability of a correct decision, denoted $Pr\{c \mid j,k\}$ becomes

$$Pr\{c \mid j,k\} = Pr\{l_j > l_i;\ \forall\ i \neq j \mid j,k\} \qquad (4\text{-}9)$$

and

$$r(t) = s_j(t) + s_j(t;\alpha,N,\tau) + s_k(t+T;\beta,L,\eta) + n(t) \qquad (4\text{-}10)$$

$$0 \leq t \leq T$$

$$l_i = \int_0^T \left[s_j(t) + s_j(t;\alpha,N,\tau) + s_k(t+T;\beta,L,\eta) \right] s_i(t)\ dt$$

$$+ \int_0^T n(t)\ s_i(t)\ dt$$

$$= \int_0^T s_j(t)\ s_i(t)\ dt + \int_0^T \sum_{n=1}^{N} \alpha_n\ s_j(t-\tau_n)\ s_i(t)\ dt$$

$$+ \int_0^T \sum_{n=1}^{L} \beta_n\ s_k(t+T-\eta_n)\ s_i(t)\ dt + n_i \qquad (4\text{-}11)$$

where

$$n_i \equiv \int_0^T n(t)\ s_i(t)\ dt \qquad (4\text{-}12)$$

Thus

$$l_i = E\ \delta_{ij} + \sum_{n=1}^{N} \alpha_n \int_0^T s_j(t-\tau_n)\ s_i(t)\ dt$$

$$+ \sum_{n=1}^{L} \beta_n \int_0^T s_k(t+T-\eta_n)\ s_i(t)\ dt + n_i \qquad (4\text{-}13)$$

In general, the remaining integrals in this expression will not be zero, even if $i \neq j$, and $i \neq k$. For example, for MFSK modulation,

$$s_i(t) = \sqrt{\frac{2E}{T}} \cos(2\pi f_i t) \qquad 0 \leq t \leq T \qquad (4\text{-}14)$$

and

$$\int_0^T s_i(t)\ s_j(t)\ dt = \frac{2E}{T}\int_0^T \cos(2\pi f_i t)\ \cos(2\pi f_j t)\ dt$$

$$= E\ \frac{\sin[2\pi(f_i - f_j)T]}{2\pi(f_i - f_j)T} + E\ \frac{\sin[2\pi(f_i + f_j)T]}{2\pi(f_i + f_j)T} \qquad (4\text{-}15)$$

If $(f_i - f_j)T$ and $(f_i + f_j)T$ each equal some integer, then indeed

$$\int_0^T s_i(t)\ s_j(t)\ dt = E\ \delta_{ij} \qquad (4\text{-}16)$$

The frequencies f_i and f_j can be chosen to satisfy Equation 4-16 and this will be assumed to be the case in the sequel. Furthermore,

$$\int_0^T s_j(t-\tau_n)\, s_i(t)\, dt = \int_{\tau_n}^T \frac{2E}{T} \cos[2\pi f_j(t-\tau_n)]\cos[2\pi f_i t]\ dt \qquad (4\text{-}17)$$

which after some manipulation, reduces to

$$\frac{E}{2\pi T(f_i+f_j)}\left\{\sin[2\pi f_i T\tau_n'] - \sin[2\pi f_j T\tau_n']\right\}$$

$$+ \frac{E}{2\pi T(f_i-f_j)}\left\{\sin[2\pi f_j T\tau_n'] - \sin[2\pi f_i T\tau_n']\right\} \equiv E\,\xi_{ij}(\tau_n') \qquad (4\text{-}18)$$

Also,

$$\int s_k(t+T-\eta_n)\ s_i(t)\ dt = \int_0^{\eta_n} \frac{2E}{T} \cos[2\pi f_k(t+T-\eta_n)]\ \cos[2\pi f_i t]\ dt$$

$$= \frac{E}{2\pi T(f_k+f_i)} \left\{ \sin[2\pi T(f_k+f_i\,\eta_n')] - \sin[2\pi f_k T(\eta_n'-1)] \right\}$$

$$+ \frac{E}{2\pi T(f_k-f_i)} \left\{ \sin[2\pi T(f_k-f_i\,\eta_n')] + \sin[2\pi f_k T(\eta_n'-1)] \right\}$$

$$\equiv E\,\zeta_{ik}(\eta_n') \tag{4-19}$$

where

$$\tau_n' = \frac{\tau_n}{T} \quad ; \quad 0 \le \tau_n' \le 1 \tag{4-20}$$

$$\eta_n' = \frac{\eta_n}{T} \quad ; \quad 1 \le \eta_n' \le 2 \tag{4-21}$$

are normalized delays.

Thus,

$$l_i = E\left[\delta_{ij} + \sum_{n=1}^{N} \alpha_n\, \xi_{ij}(\tau_n') + \sum_{n=1}^{L} \beta_n\, \zeta_{ik}(\eta_n') \right] + n_i \tag{4-22}$$

Clearly, l_i is a conditional Gaussian r.v. for which its mean and variance can be computed. Under the assumption of $s_j(t)$ presently and $s_k(t)$ previously transmitted, Equation 4-22 specifies $l_i \mid j,k$, and using an overbar to denote statistical expectation, we have

$$\overline{l_i \mid j,k} = E\left[\delta_{ij} + \sum_{n=1}^{N} \alpha_n\, \xi_{ij}(\tau_n') + \sum_{n=1}^{L} \beta_n\, \zeta_{ik}(\eta_n') \right] \tag{4-23}$$

and

$$\overline{\left[l_i \mid j,k - \overline{l_i \mid j,k} \right] \left[l_m \mid j,k - \overline{l_m \mid j,k} \right]} = \overline{n_i\, n_m}$$

$$= \iint_0^T \frac{N_0}{2} \delta(t-\tau) \; s_i(t) \; s_m(t) \; dt = \frac{N_0}{2} E \; \delta_{im} \qquad (4\text{-}24)$$

From this we observe that

$$\mathrm{var}\{l_i | j,k\} = \frac{N_0}{2} E \qquad \forall \; i \qquad (4\text{-}25)$$

Thus, the random variables $l_i | j,k$ are statistically independent, so

$$\Pr\{c | j,k\} = \prod_{i=1, i\neq j}^{M} \Pr\{l_j > l_i | j,k\}$$

$$= \int_{-\infty}^{\infty} \prod_{i=1; i\neq j}^{M} \Pr\{l_i < L_j | j,k\} \; f_{l_j | j,k}(L_j) \; dL_j \qquad (4\text{-}26)$$

where L_j is the value assumed to be taken on by l_j. Since

$$\Pr\{l_i < L_j | j,k\} = \int_{-\infty}^{L_j} \frac{1}{\sqrt{2\pi N_0 E/2}} \exp\left[- \frac{(x - \overline{l_i | j,k})^2}{2 \; N_0 \; E/2} \right] dx$$

$$= \mathrm{erf}_\star \left[\frac{L_j - E[\delta_{ij} + \sum_{n=1}^{N} \alpha_n \xi_{ij}(\tau_n') + \sum_{n=1}^{L} \beta_n \zeta_{ik}(\eta_n')]}{\sqrt{N_0 E/2}} \right] \qquad (4\text{-}27)$$

where

$$\mathrm{erf}_\star(v) \equiv \int_{-\infty}^{v} \frac{1}{\sqrt{2\pi}} e^{-\frac{u^2}{2}} \; du \qquad (4\text{-}28)$$

Thus,

$$\Pr\{c|j,k\} = \int_{-\infty}^{\infty} \prod_{i=1, i\neq j}^{M} \mathrm{erf}_*\left[\frac{L_j - E\,\Gamma(n,i,j,k)}{\sqrt{N_0 E/2}}\right]$$

$$\cdot \frac{1}{\sqrt{2\pi N_0 E/2}} \exp\left[-\frac{1}{N_0 E}\left\{L_j - E\,\Gamma(n,i,j,k)\right\}^2\right] dL_j \qquad (4\text{-}29)$$

where

$$\Gamma(n,i,j,k) \equiv \delta_{ij} + \sum_{n=1}^{N} \alpha_n \xi_{ij}(\tau_n') + \sum_{n=1}^{L} \beta_n \zeta_{ik}(\eta_n') \qquad (4\text{-}30)$$

We obtain finally,

$$\Pr\{c\} = \sum_{j=1}^{M} \sum_{k=1}^{M} \Pr\{c|j,k\} \Pr\{s_j(t)\ ;\ s_k(t)\} \qquad (4\text{-}31)$$

where $\Pr\{s_j(t)\ ;\ s_k(t)\}$ is the probability that $s_j(t)$ is presently transmitted and $s_k(t)$ was previously transmitted. Due to the independence of transmissions, the probability that $s_k(t)$ was transmitted during the previous symbol interval is the same as the probability that it will be transmitted during the current symbol interval. Since the symbols have been assumed to have equal probability,

$$\Pr\{s_j(t)\} = \Pr\{s_k(t)\} = \frac{1}{M} \qquad (4\text{-}32)$$

we have

$$\Pr\{c\} = \frac{1}{M^2} \sum_{j=1}^{M} \sum_{k=1}^{M} \Pr\{c|j,k\}$$

$$= \frac{1}{M^2} \sum_{j=1}^{M} \sum_{k=1}^{M} \int_{-\infty}^{\infty} \prod_{i=1;i\neq j}^{M} \mathrm{erf}_*\left[z + \sqrt{\frac{2E}{N_0}}\,\Gamma(n,i,j,k)\right] \frac{e^{-z^2/2}}{\sqrt{2\pi}}\, dz \qquad (4\text{-}33)$$

The probability of error (P{e}) is now obtained by subtracting the probability of correct decision shown in Equation 4-30 from unity.

In order to check this result, assume now that no multipath is present, so that $\alpha_n=\beta_n=0\ \forall\ n$. Then the above expression correctly yields the well-known probability of correct reception of M-ary orthogonal signals, namely

$$\Pr\{c\}=\int_{-\infty}^{\infty}\left[\mathrm{erf}_*\left(z+\sqrt{\frac{2E}{N_0}}\right)\right]^{M-1} \frac{1}{\sqrt{2\pi}}\, e^{-z^2/2}\, dz \qquad (4\text{-}34)$$

Again, our derived result is only valid for the specific cases that satisfy Equations 4-5 through 4-7. This means that nonorthogonal modulation schemes such as MPSK, QAM, etc., are not covered by these results. To include the more generalized cases of nonorthogonal modulation schemes would require a similar yet mathematically more complex approach and therefore has not been attempted here.

V. AN APPLICATION EXAMPLE: SPACE STATION

A. DESCRIPTION OF THE RELEVANT PORTIONS OF THE SPACE STATION COMMUNICATIONS SYSTEM

Figures 5-1 and 5-2 show diagrams of the designed physical configuration of the National Aeronautics and Space Administration (NASA) Space Station (SS) as of 3 May, 1986. This spacecraft will represent a milestone in the evolution of space research and manufacturing.

Incorporated into the Space Station design is an elaborate multiple access communication system. This system will provide for constant communications with a number of earth stations by maintaining links through NASA's Tracking and Data Relay Satellite System (TDRSS). The system design incorporates the ability to simultaneously communicate with a number of space platforms, including Co-orbiters/Free-Flyers (FF), the Orbital Transfer Vehicle (OTV), the Orbital Maneuvering Vehicle (OMV), the Space Shuttle Orbiters, and astronauts conducting Extra-Vehicular Activity (EVA).

Astronauts conducting EVA will be suited in a newly-designed spacesuit, designated the Extravehicular Maneuvering Unit (EMU). The EMU will have communications capabilities by maintaining links for voice and data, as well as video links for television cameras and for relaying a Heads-Up-Display (HUD) projection from the Space Station into the EMU helmet.

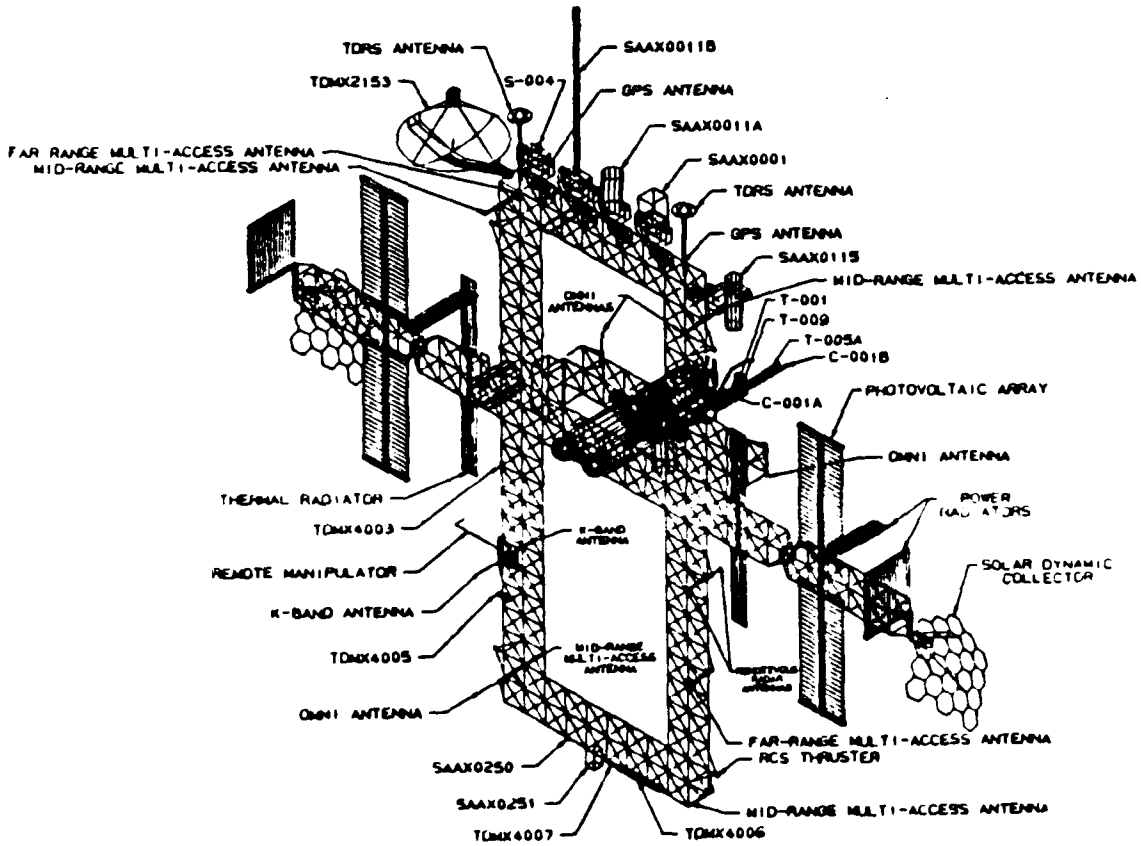

FIGURE 5-1. NASA Space Station Baseline Configuration

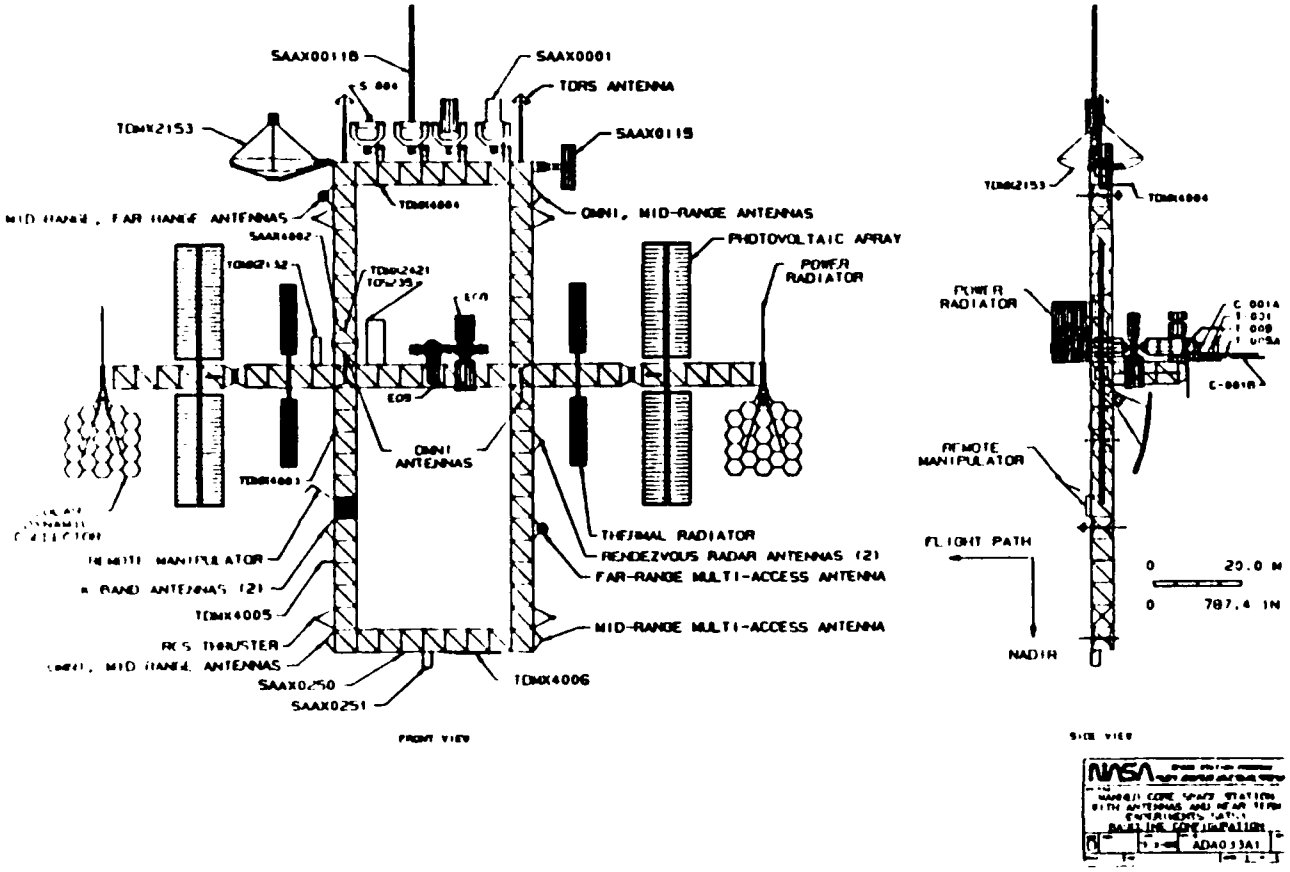

FIGURE 5-2. NASA Space Station Baseline Configuration

The Space Station is currently in the process of full-scale development. Correspondence with Mr. Sid Novosad of NASA's Johnson Space Center [6] is the sole reference for the technical descriptions contained in this chapter.

As will later become apparent, the only communications link of interest insofar as the development of this chapter is concerned is the Space Station-to-EVA astronaut forward link. There are two system configurations currently under consideration for this link. The pertinent characteristics of these two configurations are outlined in Table 5-1.

TABLE 5-1. SS TO EMU FORWARD LINK

FEATURE	CONFIGURATION 1	CONFIGURATION 2
Modulation	BPSK	DCPSK QFSK
(Alternate)		
Frequency	13.7 GHz	14.7 GHz
Bit Rate, Data	40 KBPS	100 KBPS
Bit Rate, Video	400 KBPS	22 MBPS
Link Margin	3 dB	6.1 dB

Consider first the communication links required for the Space Station to transmit to the Co-orbiters/Free-Flyers, Orbital Transfer Vehicle, Orbital Maneuvering Vehicle, and Shuttle Orbiters. Since the transmitting and receiving platforms are in free-space, devoid of reflectors, the only potential source for multipath is the structure of the receiving platform itself. In order to determine if the receiving platforms are "large" enough to provide sufficient reflected signal travel delay so as to cause multipath propagation loss, we must first determine how far the RF

energy will travel during one bit interval. This is obviously a function of bit rate. Assuming propagation at the speed of light in free-space, we make use of the bit rates under consideration in order to generate Table 5-2.

TABLE 5-2. DISTANCE TRAVELLED IN ONE BIT PERIOD

Bit Rate, R_b (BPS)	Bit Period, T	Distance, D_t (m)
22 M	45.45 ns	13.64
400 K	2.5 μs	750
100 K	10 μs	3000
40 K	25 μs	7500

The proposed receiving platforms for Space Station are substantially smaller than the corresponding signal propagation distances for all except the highest bit rate case. In addition, all platforms are generally devoid of components in their structure that would cause reflection of a substantial amount of RF energy directed towards the receive antenna. Thus, this situation prevents multipath from being a serious problem, even for the 22 MBPS case.

Nevertheless, the Space Station is a relatively *large* structure, in relation to the 13 meters transit width required to produce ISI given a 22 MBPS signaling rate. The dual keels, the living and working modules (denoted the Habitability Modules), the solar panels, and the solar dynamic reflectors are all reflectors of RF energy. This means that multipath *is* a concern when the receiving antenna

is physically close to or within the confines of the Space Station structure.

Some comments must be made here regarding the use of "space diversity" as a multipath countermeasure. In more traditional atmospheric fading situations, the propagation ray paths experience refractive "bending" within the atmosphere. If all the RF energy from a signal is bent away from a particular area in the atmosphere, that area is called a "shadow zone," because the signal is not easily received within that area. This effect can be overcome by placing receiving antennae at different locations so that if one antenna falls within the shadow zone, others may still be able to receive the signal. This technique is called "spatial diversity."

When a radio signal is transmitted to the Space Station, the conductive elements which make up its frame can reflect, diffract, absorb, and re-radiate the RF energy so that the ray paths of the signal are bent. Thus, with the Space Station, shadow zones may exist, but not because of the kind of refractive ray trace bending that occurs in the atmosphere. Nevertheless, spatial diversity techniques are still useful in overcoming these signal losses. So NASA is planning to use a similar technique on the Space Station. Current plans are to distribute receiving antennae [illegible] extreme of its structural periphery so interrupt [illegible] before they are bent by the structural elements.

This spatial diversity technique also allows us to rule out severe multipath loss in most cases when the Space Station is the receiving platform. If an antenna intercepts the incoming signal before it is reflected by the Space Station structure, then the antenna cannot experience the multipath which is caused by that structure. An onboard computer will process the received signals in real-time in order to determine which antenna is receiving the signal with the least amount of interference, and will link that antenna to the receivers directly. Thus, multipath is not expected to be a serious problem when the receiving platform is located on the Space Station.

This leaves one case yet to be considered. If an astronaut involved in Extravehicular Activity is positioned within the periphery of the Space Station structure, the radio transmissions have ample opportunity to suffer multiple reflections before they arrive at the astronaut's own receive antenna. The direct path will undoubtedly exist, yet there can be a plethora of alternate paths reflected off all the Space Station extremities previously listed. Furthermore, an EMU is a small structure, basically a "space suit", not providing the opportunity of being able to make use of space diversity as a countermeasure for multipath. In addition, both the Space Station short-range antenna and the EMU antenna are omnidirectional, so they accept all incoming signals without preference. Thus it is necessary to

accurately determine whether multipath will in fact seriously interfere with the astronaut's ability to communicate with the mother ship.

A complete analysis cannot be performed here. But it may be possible to judge qualitatively whether this subject deserves further attention by evaluating previously obtained results on receiver probability of error when ISI effects due to multipath propagation for conditions typical of what can be expected for Space Station designs. That is the intent of this chapter.

B. ANALYSIS OF THE POTENTIAL FOR SPACE STATION ISI

1. Scenario

In order to evaluate the probability of error expression given by Equations 4-31 and 4-32, it is necessary to set up an arbitrary geometry for which the requisite assumptions that lead to multipath-induced ISI are met. Due to analytical constraints, however, the geometry must be arranged so that the only bits arriving at the receiver at time t are the current bit and the previously transmitted bit only. A complete analysis would require a detailed survey to determine exactly how many paths satisfy this criterion, and to establish the expected signal strengths and delays associated with each path. However, if it can be shown that a single reflected path can interfere sufficiently with the

quality of communications as to effectively nullify the receiver, then a more detailed analysis may be unnecessary.

Assuming that the very large solar panels of the Space Station are the primary RF reflectors, and assuming that a 22MBPS data link is in use between the Space Station omni antenna and an EVA astronaut, Figure 5-3 describes a geometry where the "k^{th}" bit arrives via the direct path, while at the same time, the previous "$k-1^{th}$" bit arrived via the reflected path.

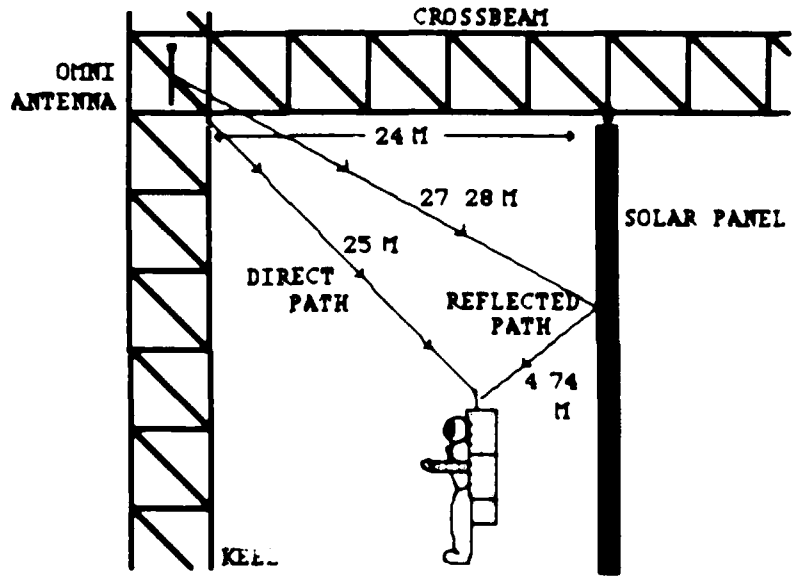

FIGURE 5-3. ISI Analysis Geometry (not to scale)

By this geometry, the direct path distance [illegible] meters, and the total reflected path distance [illegible] meters. At a bit rate [illegible] MBPS, [illegible] the time [illegible] the receiver is integrating the [illegible] bit, [illegible] arrive at the EMU via the direct path, while [illegible]

time, the previous bit "k-1" arrives via the reflected path, and after a slight delay, the "k^{th}" bit follows.

In this scenario it is assumed that the solar panel is facing *away* from the astronaut, so that its aluminum backplate faces him/her. Since aluminum is a good conductor, it is possible that approximately 100% of the incident 14.7 GHz carrier wave is reflected by the solar panel. Furthermore, since the space loss difference between the direct and reflected paths is negligible, the reflected path signal has approximately the same electromagnetic strength as the direct path signal. Thus, the α_n as well as the β_n coefficients in Equation 4-12 is equal to one.

The other necessary parameters for evaluation of Equations 4-11 and 4-12 can be calculated directly and are [illegible] in Table 5-3.

TABLE 5-3 [illegible] PARAMETERS

PARAMETER	VALUE
M [illegible]	4
M [illegible]	[illegible]
f	[illegible] GHz
[illegible]	[illegible]
$\tau_{[illegible]}$	[illegible]
$\eta_{[illegible]}$	[illegible]
$\beta_{[illegible]}$	
$\alpha_{[illegible]}$	

2 Analysis

[illegible]

Shift Keying), QFSK (Quaternary Frequency Shift Keying), and DCPSK (Differentially Coherent Phase Shift Keying). The analysis, however, does not apply to a differential modulation scheme, and although it may be possible to extrapolate results for differential schemes from the analysis, it would be quite difficult to do so in the general case, therefore such schemes are not considered.

Although BPSK is being considered as one of the potential modulation schemes for Space Station digital communication links, that scheme is not an orthogonal signaling technique, so that the general results obtained in this chapter do not apply to this specific scheme. However, since the performance of most systems employing BPSK modulation enjoy a 3 dB SNR improvement over the performance of similar systems utilizing BFSK modulation, which is an orthogonal signalin scheme, the results involving the latter scheme can be used as an indicator of a similar system employing BPSK modulation provided that approximately 3 dB SNR adjustments are made.

The receiver probability of error has been evaluated using the general results of Chapter 4, for the cases of transmission via BFSK and QFSK modulated signals, as a function of SNR. In this chapter, SNR is defined as

$$SNR \equiv \frac{E}{N} \qquad (5.1)$$

where E is the signal energy and N_0 is the PSD level of Additive White Gaussian Noise (AWGN) in Watts/Hz. The signal transmission and reflection geometry used in order to obtain these results is based on the assumptions described in the previous section. The signal strengths traveling along the reflected paths, namely α and β, were assumed to be unity, indicating the fact that we are assuming that the strength of the signals traveling along the reflected path equals that of the signals traveling along the direct path. The delays, τ and η, were calculated to be 0.348 given the assumed propagation geometry.

Numerical performance evaluations were then performed in which the signal traveling along the reflected path had a strength of half that of the signal traveling along the direct path (β=0.5). Finally, similar evaluations were carried out for varying propagation delays which took on values over the range 0.1 to 0.9.

The receiver performance curves of BFSK and QFSK modulated signals are shown in Figures 5-4 and 5-5 respectively, with values of signal delay that would be encountered in the assumed scenario previously described (τ η=0.348). Curves for the cases of no ISI, (i.e. no multipath propagation) are included in each case, making it possible to evaluate how large a detrimental effect on receiver performance is due to multipath-induced ISI.

Observe that as the reflected path signal strength increases, receiver performance degrades as expected. Also note that QFSK modulated signals exhibit somewhat higher error probability than BFSK modulated signals. However, direct comparisons cannot be made because the former involves symbol error rate specifications while the latter involves bit error rate values.

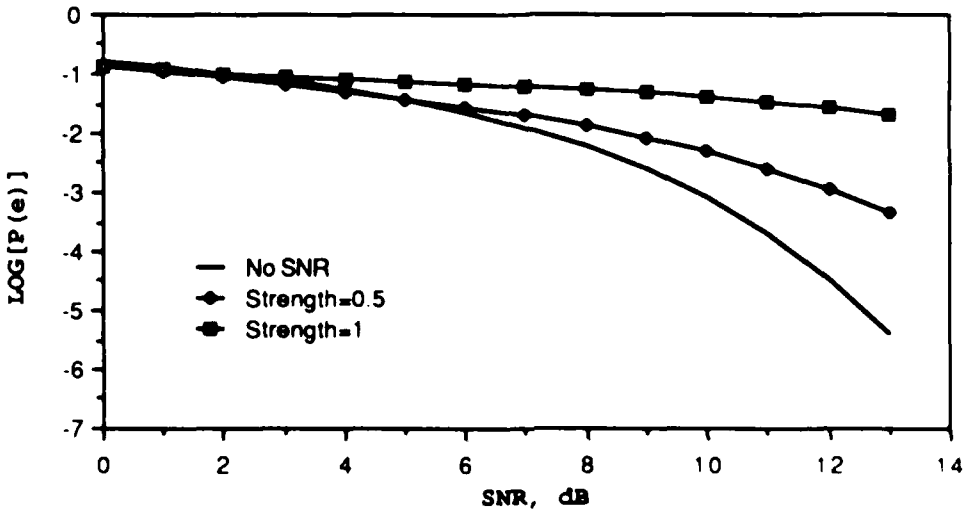

FIGURE 5-4. BFSK With Delay=0.348

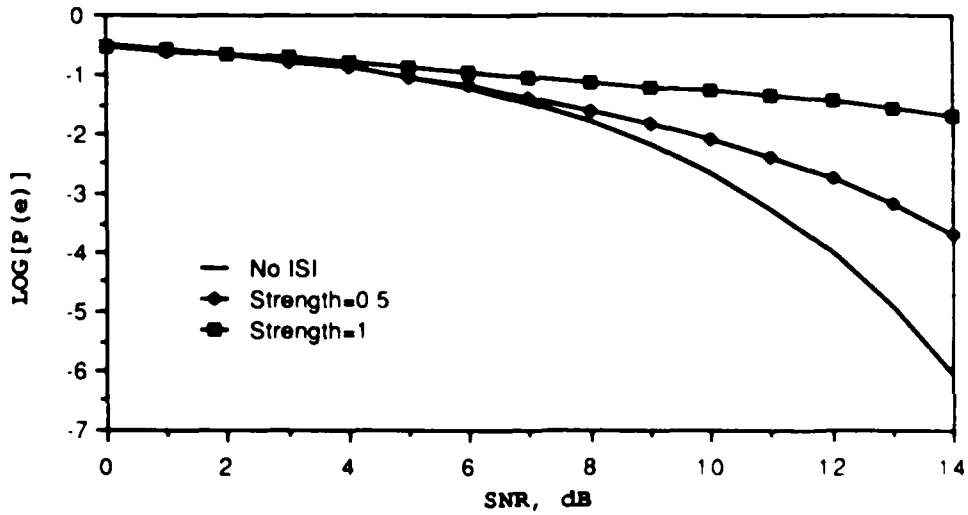

FIGURE 5-5. QFSK With Delay=0.348

Keeping now the signal propagation delay constant at 0.1, Figures 5-6 and 5-7 display the corresponding results for signal transmission via BFSK and QFSK when α and β vary over the range from zero to one. These plots show that for this relatively small signal propagation delay, systems using BFSK modulation display a marginal amount of performance superiority over systems using QFSK modulation.

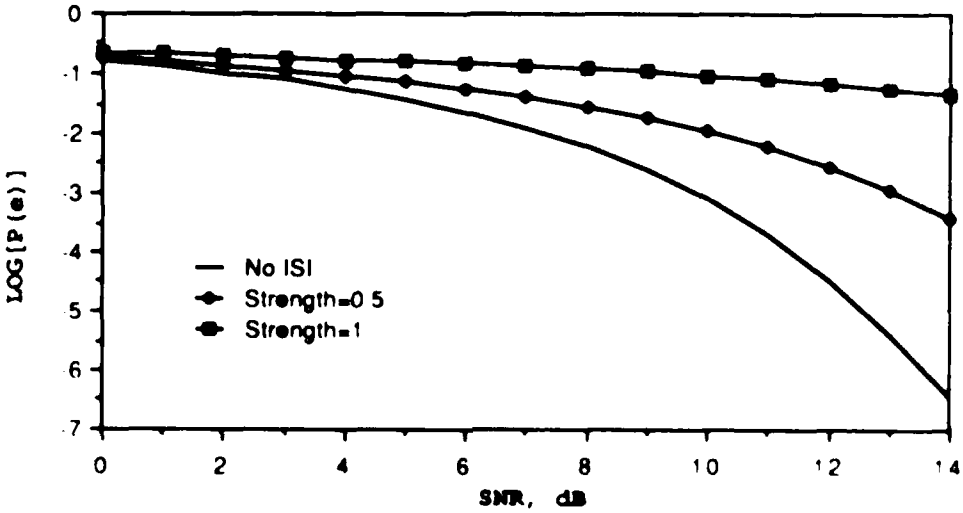

FIGURE 5-6. BFSK With Delay=0.1

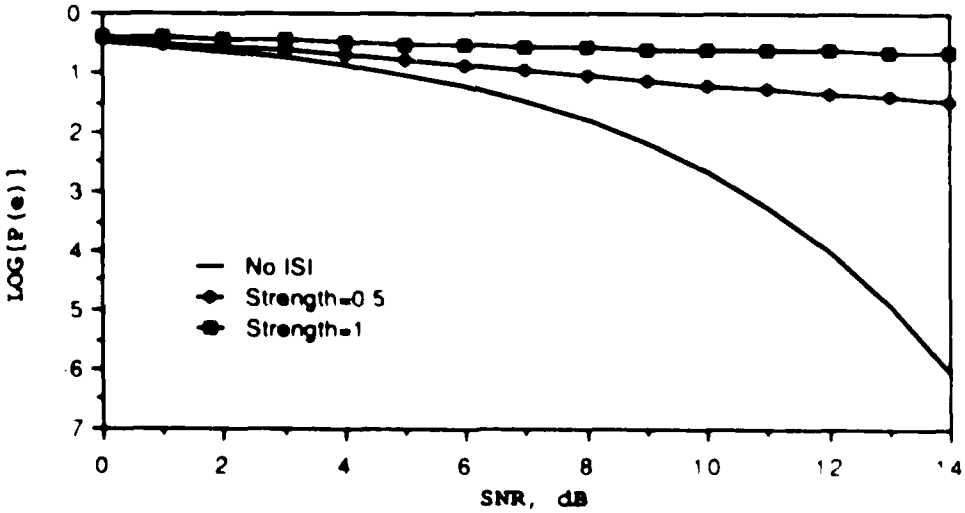

FIGURE 5-7. QFSK With Delay=0.1

Whereas a propagation delay of 0.1 is at the low end of the acceptable values consistent with the initial analytical assumptions, a delay of 0.9 is near the high end of the acceptable values. Holding the propagation delay constant at 0.9, Figures 5-8 and 5-9 display the receiver performance for BFSK and QFSK modulation schemes while the reflected path signal strengths increase from zero to one.

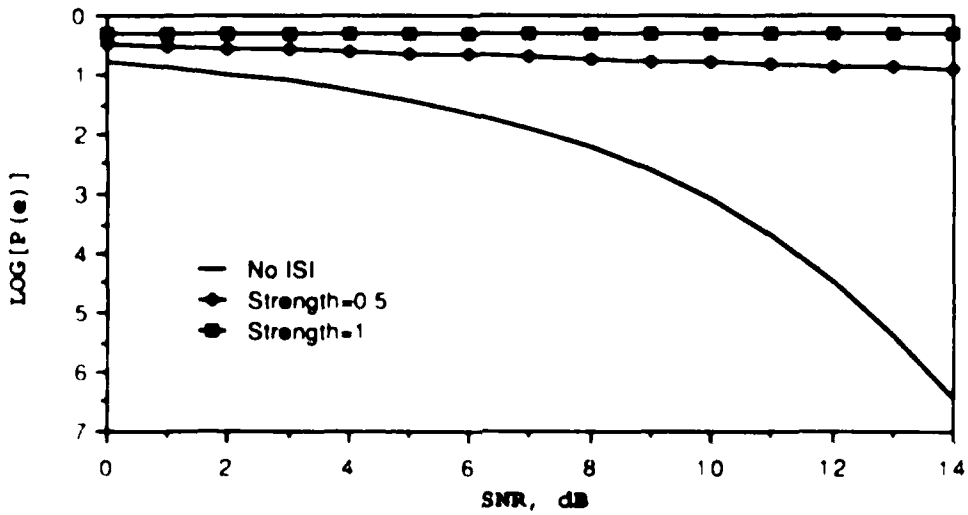

FIGURE 5-8. BFSK With Delay=0.9

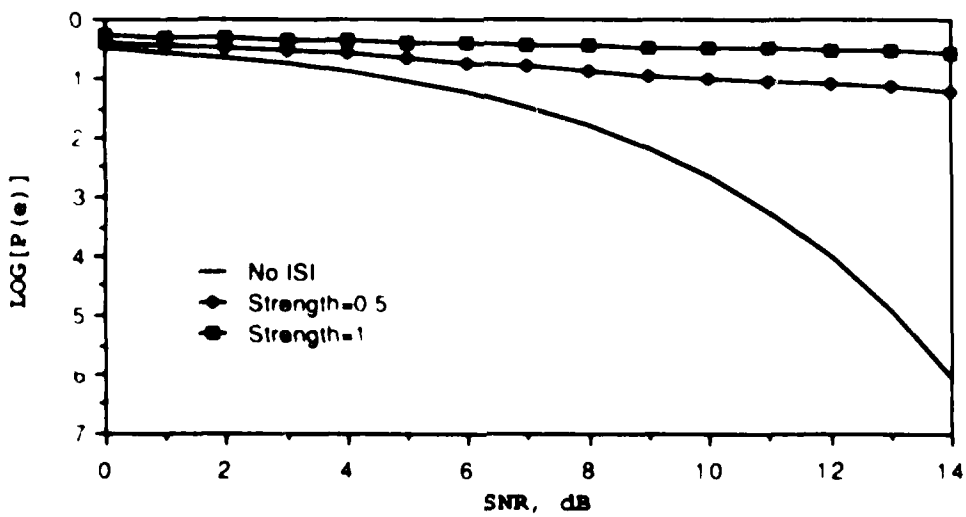

FIGURE 5-9. QFSK With Delay=0.9

In general, for this limited scenario, ISI analysis shows that:

- At a 22MBPS data rate, degradation can result even from just one multipath source even given the fact that in this analysis only one bit was interfering at any given time.
- ISI is worse when the delay is long (see Figures 5-6 through 5-9).
- ISI gets worse as the reflected signal strength gets stronger.
- In the worst cases of ISI, the differences between QFSK and BFSK are too small to be of concern.

Although just one reflected path was analyzed, the probability of error was shown to have quickly degraded to unacceptable levels. In light of the fact that Space Station will have much more than one multipath reflector and will not be limited to just one bit interference, a nominal design specification link margin of 6 dB may not reduce the probability of error to acceptable levels. Therefore, this is a problem that deserves more careful scrutiny before the actual hardware choices are made.

VI. CONCLUSIONS

Chapter 2 provided a brief overview of the root causes of multipath propagation. The general theory pertaining to how multipath propagation degrades digital receiver performance was described. In addition, a description of how the physical structure relates to the analytical parameters was provided.

Chapter 3 then dealt with multipath propagation in the form of a digital communication system experiencing Rician fading. Analytical expressions of receiver probability of error for the specific cases of MFSK and MPSK modulation schemes were obtained.

Chapter 4 treated the multipath propagation phenomenon in the form of single-bit Intersymbol Interference (ISI). An exact result for receiver probability of error was obtained for M-ary orthogonal signaling schemes where the M symbols have equal probabilities.

In Chapter 5, multipath propagation analysis was applied to NASA's Space Station. It was demonstrated that in at least one communication link scenario, Intersymbol Interference may cause unacceptable receiver performance in a link between the Space Station and an Extravehicular Activity (EVA) astronaut. It must be emphasized that Chapter 5 took

only a cursory but conservative look at the actual conditions to be present when Space Station is finally built. Actual receiver performance could be somewhat worse than the performance obtained in this study.

A further complication is that in the analysis of Chapter 5, the signal delays and signal strengths were treated as deterministic quantities. In actuality, since there will be no way of predetermining the physical location of the astronaut's receiver at any instant in time, it would be more accurate to treat those parameters as random processes.

Since the phase of an incoming signal is determined by its propagation delay, and since the propagation delay in the case of the Space Station-to-astronaut link is most likely to be observed as a random process, the delay itself should be treated as a random process. In any situation where the incoming signal phase is random, it is generally unwise to encode the message as a function of that phase. This may preclude the use of Phase Shift Keyed signals as an appropriate modulation scheme for Space Station. In a situation such as the one described in Chapter 5, a Frequency Shift Keyed modulation scheme is usually a better choice, since the frequency of the incoming signal will be relatively unaffected by the signal's propagation over such a short distance.

All these remarks, however, are contingent upon the use of omnidirectional antennae with both the transmitter and receiver. If a directional antenna were to be used on either end, the chance of having unwanted reflections off of Space Station structures could be minimized. This could probably be best implemented through the use of a directional antenna at the transmitter which could track the EVA astronaut as he moved about. The tracking antenna could either mechanically or electronically follow an omnidirectional beacon that could be carried by the astronaut. The specifics as to what system would perform optimally given the size and power constraints of Space Station systems is left for further research.

The important finding to come out of this work is the possibility that an EVA astronaut, [illegible] from his mother ship, might very well be able to communicate with anyone if the multipath problem [illegible] addressed. The implications [illegible] obvious.

LIST OF REFERENCES

1. Reitz, J. R., [illegible] 325, Addison-Wesley [illegible]

2. Environmental Science Services [illegible] Technical Report [illegible] A [illegible] Mechanisms Remedies and [illegible] p. 2, March [illegible]

3. [illegible]rdan, [illegible] and Radiating Systems [illegible]

4. [illegible] Ideal Reception [illegible] Noise, [illegible] September [illegible]

[illegible] Detection of [illegible] Academ[illegible]

[illegible] Communication System [illegible]

BIBLIOGRAPHY

[illegible], [illegible], and Herman, D., Ed., Space Stations and Space Platforms-Concepts, Design, Infrastructure, and Uses, American Institute of Aeronautics and Astronautics, 1985.

[illegible], [illegible], and McGillem, C., Probabilistic Methods of Signal and System Analysis, Holt, Rinehart, & Winston, 1971.

[illegible], H. D., Coden, M. H., and Scholl, F. W., Communications, Tracking, and Docking on the Space Station, paper presented at the National Telesystems Conference, Galveston, Texas, 7 November 1982.

[illegible], F., Digital Communications: Satellite/Earth Station Engineering, Prentice-Hall, 1981.

[illegible], N., "Signal Design for Fast-Fading Gaussian Channels," IEEE Transactions on Information Theory, v. [illegible] 17, pp. 247-256, May 1971.

[illegible], M. H., and Seyl, J. W., Space Station Communications and Tracking Equipment, paper presented at the National Telesystems Conference, Galveston, Texas, 7 November [illegible]

Helstrom, C., Probability and Stochastic Processes for Engineers, Macmillan, 1984.

Lee, W., Mobile Communications Engineering, M[illegible] 1982.

Lindsey, W., "Error Probabilities for [illegible] Multichannel Reception of Binary and N-[illegible] Transactions on Information Theory, [illegible] October 1964.

Lindsey, W., Synchronization Systems [illegible] Control, Prentice-Hall, 19[illegible]

M.I.T. Lincoln Laboratory [illegible] Transmission for Multipath [illegible] August 1963.

MSAT-X Report 105, [illegible] Satellite Transmission, [illegible] 24 January 19[illegible]

AD-A178 578 THE EFFECT OF MULTIPATH ON DIGITAL COMMUNICATIONS SYSTEMS: WITH APPLICATION TO SPACE STATION(U) NAVAL POSTGRADUATE SCHOOL MONTEREY CA W J TOTI DEC 86 2/2

UNCLASSIFIED F/G 17/2 NL

END
4-87
DTIC

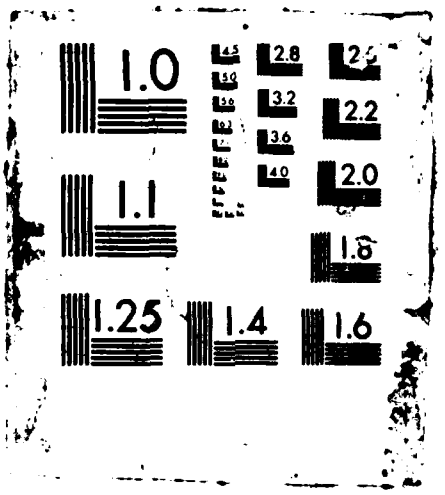
1.0
2.8
3.2
3.6
4.0
2.2
2.0
1.1
1.8
1.25
1.4
1.6

Oka, I., "Intersymbol and CW Interference in QPSK, OQPSK, and MSK Hard-Limiting Satellite Systems," IEEE Transactions on Aerospace and Electronic Systems, v. AES-22, pp. 91-97, January 1986.

Peebles, P., Communications Systems Principles, Addison-Wesley, 1976.

Pierce, J. N., "Theoretical Diversity Improvement in Frequency-Shift Keying," Proceedings of the IRE, pp. 903-910, May 1958.

Proakis, J., Digital Communications, McGraw-Hill, 1983.

Rome Air Development Center Technical Report RADC-TR-73-167, Line-of-Sight Wideband Propagation, by P. Bello,et al, May 1973.

Seo, J., Cho, S., and Feher, K., "Performance of High-Level QAM in the Presence of Gaussian/Non-Gaussian Noise and Co-Channel CW Interference in Multipath Fading Environment," unpublished.

Shanmugam, K., Digital and Analog Communications Systems, John Wiley & Sons, 1979.

Simpson, T., Ed., The Space Station, IEEE Press, 1984.

Stoewer, H., and Bainum, P., Ed., From Spacelab to Space Station, American Astronautical Society, 1985.

Rice, S. O., "Noise in FM Receivers," Time Series Analysis, M. Rosenblatt, Ed., Chapter 23, Wiley, 1963.

Rice, S. O., "Mathematical Analysis of Random Noise," Bell System Technical Journal, v. 23, pp. 282-332, March 1944.

Van Trees, H., Detection, Estimation, and Modulation Theory, John Wiley & Sons, Inc., 1968.

Ziemer, R., and Peterson, R., Digital Communications and Spread Spectrum Systems, Macmillan, 1985.

INITIAL DISTRIBUTION LIST

		No. Copies
1.	Defense Technical Information Center Cameron Station Alexandria, Virginia 22304-6145	2
2.	Library, Code 0142 Naval Postgraduate School Monterey, California 93943-5002	2
3.	Department Chairman, Code 62 Department of Electrical and Computer Engineering Naval Postgraduate School Monterey, California 93943-5000	1
4.	Commander Naval Space Command Room 17, Building 183 Dahlgren, Virginia 22448	1
5.	Johnson Space Center National Aeronautics and Space Administration ATTN: Mr. Sid Novosad EE8/Novosad Houston, Texas 77058	1
6.	Professor Daniel Bukofzer, Code 62Bh Department of Electrical and Computer Engineering Naval Postgraduate School Monterey, California 93943-5000	3
7.	Professor Jeffrey Knorr, Code 62Ko Department of Electrical and Computer Engineering Naval Postgraduate School Monterey, California 93943-5000	1

END

4-87

DTIC