AD-A175 610 INCLINED PILEUP OF EDGE DISLOCATIONS NEAR THE CRACK TIP 1/1
(U) PRINCETON UNIV NJ DEPT OF CIVIL ENGINEERING
A C ERINGEN ET AL. 03 DEC 86 ARO-22967.2-EG
UNCLASSIFIED DAAL03-86-K-0019 F/G 20/11 NL

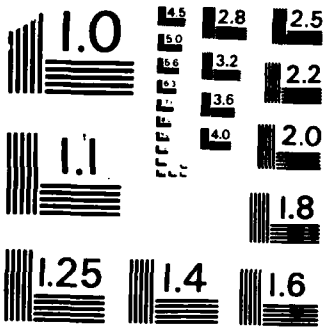

MICROCOPY RESOLUTION TEST CHART
NATIONAL BUREAU OF STANDARDS-1963-A

ARO 22967.2-EG

(2)

AD-A175 610

INCLINED PILEUP OF EDGE DISLOCATIONS
NEAR THE CRACK TIP

A.C. ERINGEN
G.D.C. DHONDT

December 1986

U.S. Army Research Office
Contract DAAL03-86-K-0019

Princeton University

DEPARTMENT OF CIVIL ENGINEERING

DTIC
ELECTE
JAN 0 2 1987
S D
E

DTIC FILE COPY

SCHOOL OF ENGINEERING & APPLIED SCIENCE
PRINCETON UNIVERSITY
PRINCETON, N.J. 08544

This document has been approved for public release and sale; its distribution is unlimited.

86 12 29 234

2

INCLINED PILEUP OF EDGE DISLOCATIONS NEAR THE CRACK TIP

A.C. ERINGEN
G.D.C. DHONDT

December 1986

U.S. Army Research Office
Contract DAAL03-86-K-0019

Princeton University

APPROVED FOR PUBLIC RELEASE:
DISTRIBUTION UNLIMITED

The findings in this report are not to be construed as an official Department of the Army position, unless so designated by other authorized documents.

DTIC
D
E

Inclined pileup of edge dislocations near the crack tip.

Guido D.C. Dhondt and A. Cemal Eringen

Princeton University, Princeton N.J.

Accession For
NTIS GRA&I ☒
DTIC TAB ☐
Unannounced ☐
Justification
By
Distribution/
Availability Codes
Avail and/or
Dist Special
A-1

DTIC
COPY
INSPECTED

Abstract.

The formation of a plastic zone, in the form of a linear array of inclined edge dislocations in front of a mode I crack in plane strain, is studied. The direction of the force field on an edge dislocation due to the crack load allows for the determination of the plastic zone as a function of the inclination angle. The dislocation distribution along the plastic zone is found from force equilibrium considerations. The results show the presence of a dislocation free zone (DFZ) and a shrinking of the plastic zone size with greater angle of inclination. The latter angle does not seem to influence the DFZ size. The way in which we determined the stress field allows us to study the influence of defects on the plastic zone formation.

Introduction.

Electron microscope studies have revealed that crack propagation involves a combination of modes.[1,2,3,4,5] In thin areas, where the state of stress is predominantly that of plane stress, the crack propagates as a mode III-crack and emits screw dislocations in a plane coplanar with the crack. In thicker areas the crack behaves as a mode I-crack, and either it blunts by emitting edge dislocations on planes 45° to 90° inclined to the crack plane or propagates suddenly in a zig-zag fashion.

The distribution of dislocations in the plastic zone coplanar to the crack was first treated theoretically by Bilby, Cottrell and Swinden (BCS).[6] The pile-up of screw dislocations in front of the mode III crack was later studied by Majumdar and Burns,[7] and Chang and Ohr.[8] These latter studies included the presence of a dislocation-free zone (DFZ). Chang and Ohr also studied the inclined pile-up of screw dislocations, without DFZ[9].

Experimental observations on the plastic zones, ahead of the crack tips, in real materials are substantially different in that the plastic zones are spread on two thin leaves attached to each of the crack tips. Here we idealize this by considering one or two symmetric lines of distributed dislocations that are inclined to the crack line. We consider only the pile-up of edge dislocations for the mode I-crack. Our approach is quite different from previous ones in that it searches for the possibility of existence of a plastic zone in the form of a linear array of edge dislocations with a certain angle of inclination. In this way the size of the DFZ

and the plastic zone and its position arrise naturally from the calculations. We have also determined the exact form of the dislocation distribution. The analysis is based on a linear isotropic elastic material.

Plane Strain Solution.

In order to find the force field on an edge dislocation due to a crack and other defects it is necessary to determine the stress field. For our study the general form of the stress field, arising from an arbitrary symmetrically loaded crack in plane strain, is needed. This problem can be split up into a symmetric mode I problem and an anti-symmetric mode II problem.

The Boundary Conditions (B.C.) of the symmetric mode I problem are:

$$\sigma_{xy}|_{y=0} = 0 \tag{1}$$

$$\sigma_{yy}|_{crack} = -p(x) \tag{2}$$

$$u_y|_{outside\ crack} = 0 \tag{3}$$

$$p(x) = p(-x) \tag{4}$$

where σ_{kl}, (k,l = x,y) denote the stress tensor, (u_x, u_y) the displacement vector and p(x) is the traction applied to the crack surface.

The stress field for this problem is given by (Sneddon [10] p 26):

$$\sigma_{xx}(x,y) = \sqrt{\frac{2}{\pi}}\int_0^\infty (y\xi - 1)\xi\psi(\xi)e^{-\xi y}\cos(\xi x)d\xi \tag{5}$$

$$\sigma_{yy}(x,y) = -\sqrt{\frac{2}{\pi}}\int_0^\infty (y\xi + 1)\xi\psi(\xi)e^{-\xi y}\cos(\xi x)d\xi \tag{6}$$

$$\sigma_{xy}(x,y) = -y\sqrt{\frac{2}{\pi}}\int_0^\infty \xi^2\psi(\xi)e^{-\xi y}\sin(\xi x)d\xi \tag{7}$$

$$\sigma_{zz}(x,y) = \nu(\sigma_{xx} + \sigma_{yy}) \tag{8}$$

where

$$\psi(\xi) = \sqrt{\frac{\pi}{2}}\int_0^1 f(t)J_0(\xi t)dt \tag{9}$$

$$f(t) = \frac{2t}{\pi}\int_0^t \frac{p(u)du}{\sqrt{t^2 - u^2}} \tag{10}$$

Here $J_n(z)$ denotes the Bessel's function of the first kind of order n.

The B.C. of the antisymmetric mode II problem are:

$$\sigma_{yy}|_{y=0} = 0 \tag{11}$$

$$\sigma_{xy}|_{crack} = -q(x) \tag{12}$$

$$u_x|_{\text{outside crack}} = 0 \tag{13}$$

$$q(x) = -q(-x) \tag{14}$$

where q(x) is the shear stress applied to the crack surface.

The solution of this problem is:

$$\sigma_{xx}(x, y) = -\sqrt{\frac{2}{\pi}}\int_0^\infty (\xi y - 2)\xi\psi(\xi)e^{-\xi y}\cos(\xi x)d\xi \tag{15}$$

$$\sigma_{yy}(x, y) = \sqrt{\frac{2}{\pi}}\int_0^\infty \xi^2 y\psi(\xi)e^{-\xi y}\cos(\xi x)d\xi \tag{16}$$

$$\sigma_{xy}(x, y) = \sqrt{\frac{2}{\pi}}\int_0^\infty (\xi y - 1)\xi\psi(\xi)e^{-\xi y}\sin(\xi x)d\xi \tag{17}$$

$$\sigma_{zz}(x, y) = \nu(\sigma_{xx} + \sigma_{yy}) \tag{18}$$

where

$$\psi(\xi) = \sqrt{\frac{\pi}{2}}\int_0^1 f(t)J_1(\xi t)dt \tag{19}$$

$$f(t) = \frac{2}{\pi}\int_0^1 \frac{uq(u)du}{\sqrt{t^2 - u^2}} \tag{20}$$

These solutions involve quite tedious triple integrations. By expanding p(x) and q(x) in Fourier series, we managed to reduce the triple integrations to single ones, resulting in the following solution:

Symmetric mode I:

$$p(x) = \sum_{n=0}^{\infty} p_n \cos(n\pi x) \tag{21}$$

$$\sigma_{kl} = \sum_{n=0}^{\infty} p_n \sigma_{kl}^n(x, y) \quad (k, l = x, y) \tag{22}$$

where

$$\sigma_{xx}^n(x, y) = \int_0^1 tJ_0(n\pi t)[yh(x, y, t) - f(x, y, t)]dt \tag{23}$$

$$\sigma_{yy}^n(x, y) = -\int_0^1 tJ_0(n\pi t)[f(x, y, t) + yh(x, y, t)]dt \tag{24}$$

$$\sigma_{xy}^n(x, y) = -y\int_0^1 tJ_0(n\pi t)j(x, y, t)dt \tag{25}$$

Antisymmetric mode II:

$$q(x) = \sum_{n=1}^{\infty} q_n \sin(n\pi x) + q_0 x \tag{26}$$

$$\sigma_{kl} = \sum_{n=0}^{\infty} q_n \sigma_{kl}^n(x, y) \quad (k, l = x, y) \tag{27}$$

where

$$\sigma_{xx}^n(x, y) = -\int_0^1 g_n(t)\left[yh^*(x, y, t) - 2f^*(x, y, t)\right]dt \tag{28}$$

$$\sigma_{yy}^n(x, y) = y\int_0^1 g_n(t)h^*(x, y, t)dt \tag{29}$$

$$\sigma_{xy}^n(x, y) = \int_0^1 g_n(t)[yh_s(x, y, t) - f_s(x, y, t)]dt \tag{30}$$

$$g_n(t) = tJ_1(n\pi t) \quad n \geq 1 \tag{31}$$

$$g_0(t) = t^2/2 \tag{32}$$

The term q_0x in (26) is to account for a non zero shear stress at the crack tip. The functions $f(x,y,t)$, $h(x,y,t)$, $j(x,y,t)$, $f^*(x,y,t)$, $h^*(x,y,t)$, $f_s(x,y,t)$ and $h_s(x,y,t)$ are collected in the appendix.

Along the crack line a great deal of simplifications are achieved:

Symmetric mode I

$$\sigma^n_{xx}(x,0) = x\int_0^1 \frac{tJ_0(n\pi t)dt}{(x^2-t^2)^{3/2}} \tag{33}$$

$$\sigma^n_{yy}(x,0) = \sigma^n_{xx}(x,0) \tag{34}$$

$$\sigma^n_{xy}(x,0) = 0 \tag{35}$$

Antisymmetric mode II

$$\sigma^n_{xx}(x,0) = 0 \tag{36}$$

$$\sigma^n_{yy}(x,0) = 0 \tag{37}$$

$$\sigma^n_{xy}(x,0) = \int_0^1 \frac{tf(t)dt}{(x^2-t^2)^{3/2}} \tag{38}$$

where

$$g_n(t) = tJ_1(n\pi t) \quad n \geq 1 \tag{39}$$

$$g_0(t) = t^2/2 \tag{40}$$

Hence we have the solution of a rather general problem in a form attractive to computations. The generality will allow us later on to take into account the influence of any kind of in-plane defects on the plastic zone size and position.

Method of approach.

Experimental observations indicate that from the crack tip emanate one or two sets of edge dislocations making an average angle $\pm\alpha$ with the crack line. At first we look at the case of just one set of dislocations. We idealize this picture by assuming that the edge dislocations constitute two straight lines (fig 1).

We can distinguish four kinds of forces on any of these dislocations:

1. The force $\vec{F}_c$ due to the crack load.

$$\vec{F}_c(t) = b(t)\vec{F}_0(t) \tag{41}$$

where b(t) is the Burger's vector density at t,

$$\vec{F}_0(t) = \Big\{\Big[\sigma^c_{xy}(t)\cos(\alpha) + \sigma^c_{yy}(t)\sin(\alpha)\Big]\vec{e}_x - \Big[\sigma^c_{xx}(t)\cos(\alpha) + \sigma^c_{xy}(t)\sin(\alpha)\Big]\vec{e}_y\Big\} \tag{42}$$

$\sigma^c_{kl}(t)$ (k,l = x,y) is the stress field at t due to the crack load and t is a local coordinate along the plastic zone ($t \in [0, L]$), fig 1.

2. The force $\vec{F}_d$ due to the other dislocations.

$$\vec{F}_d(t) = b(t)\int_0^L \vec{K}_1(t,\zeta)b(\zeta)d\zeta \tag{43}$$

where

$$\vec{K}_1(t,\zeta) = \frac{\mu}{2\pi(1-\nu)(t-\zeta)}\vec{e}_t \tag{44}$$

Here μ is the shear modulus and ν is Poisson's ratio.

3. The force $\vec{F}_{cd}$ due to the interaction of the dislocations with the crack.

$$\vec{F}_{cd}(t) = b(t)\int_0^L b(\zeta)\vec{K}_2(t,\zeta)d\zeta \tag{45}$$

where

$$\vec{K}_2(t,\zeta) = \Big\{ \Big[\sigma^{cd}_{xy}(t,\zeta)\cos(\alpha) + \sigma^{cd}_{yy}(t,\zeta)\sin(\alpha)\Big]\vec{e}_x$$

$$-\Big[\sigma^{cd}_{xx}(t,\zeta)\cos(\alpha) + \sigma^{cd}_{xy}(t,\zeta)\sin(\alpha)\Big]\vec{e}_y \Big\} \tag{46}$$

$\sigma^{cd}_{kl}(t,\zeta)$ is the stress field at t due to the interaction of the crack with a unit delta-Dirac dislocation density at ζ. ζ and t are local coordinates along the plastic zone ($t,\zeta \in [0,L]$).

4. The force $\vec{F}_f$ due to friction in the glide plane of the dislocation.

$$\vec{F}_f(t) = -c_f b(t)\vec{e}_t \tag{47}$$

where c_f is of the order of

$$c_f = 10^{-4}\mu \;\; a \;\; 10^{-2}\mu \tag{48}$$

The equilibrium configuration of the system requires that:

$$\vec{F}_c + \vec{F}_d + \vec{F}_{cd} + \vec{F}_f = 0 \tag{49}$$

or

$$\vec{F}_0(t) + \int_0^L \Big[\vec{K}_1(t,\zeta) + \vec{K}_2(t,\zeta)\Big] b(\zeta)d\zeta - c_f\vec{e}_t = 0 \tag{50}$$

At first we neglect the interaction forces. Hence we have:

$$\vec{F}_0(t) + \int_0^L \vec{K}_1(t,\zeta)b(\zeta)d\zeta - c_f\vec{e}_t = 0 \tag{51}$$

Due to the chosen configuration the forces between the dislocations $\vec{F}_d$ are parallel to their line of position, i.e. they have the same angle of inclination. Indeed, substituting (44) in (51) one obtains:

$$\vec{F}_0(t) + \vec{e}_t\left[\int_0^L K_1(t,\zeta)b(\zeta)d\zeta - c_f\right] = 0 \tag{52}$$

where

$$K_1(t,\zeta) = |\vec{K}_1(t,\zeta)| \tag{53}$$

Hence, in order to obtain equilibrium the forces due to the crack load must also have an inclination angle α (a necessary condition). From this we deduce the following approach to the solution of our problem:

1. We choose an angle α.

2. We determine the force field $\vec{F}_0$ due to the crack load on an edge dislocation with this angle of inclination.

3. In this force field we look for a straight line with inclination angle α, of forces having this same inclination angle. This gives us the size and position of the plastic zone.

4. Knowing the force field along this line, we can calculate the edge dislocation distribution (Burger's vector) which will generate a force field with the opposite sign (force equilibrium). This requires the solution of the following integral equation:

$$\int_0^L K_1(t,\zeta)b(\zeta)d\zeta = -f(t) \tag{54}$$

where

$$f(t) = F_0(t) - c_f \tag{55}$$

$$F_0(t) = |\vec{F}_0(t)| \tag{56}$$

5. The interaction forces between crack and dislocations can be treated by iteration. Let the solution of (54) be $b_0(t)$. The dislocation density $b_1(t)$, after one iteration is given by the solution of

$$\vec{F}_0(t) + \int_0^L \vec{K}_1(t,\zeta)b_1(\zeta)d\zeta + \int_0^L \vec{K}_2(t,\zeta)b_0(\zeta)d\zeta - c_f\vec{e}_t = 0 \tag{57}$$

The iterated location of the plastic zone is determined by the force field

$$\vec{F}_1(t) = \vec{F}_0(t) + \int_0^L \vec{K}_2(t,\zeta)b_0(\zeta)d\zeta \tag{58}$$

and the density $b_1(t)$ is the solution of

$$\int_0^L K_1(t,\zeta)b_1(\zeta)d\zeta = -f_1(t) \tag{59}$$

where

$$f_1(t) = |\vec{F}_1| - c_f \tag{60}$$

In case of two symmetrically located dislocation lines (fig 2) we have to introduce some additional forces.

5. The force $\vec{F}_{cds}$ due to the interaction of the symmetrically located dislocations with the crack.

$$\vec{F}_{cds}(t) = b(t)\int_0^L b(\zeta)\vec{K}_3(t,\zeta)d\zeta \tag{61}$$

where

$$\vec{K}_3(t,\zeta) = \left\{\left[\sigma_{xy}^{cds}(t,\zeta)\cos(\alpha) + \sigma_{yy}^{cds}(t,\zeta)\sin(\alpha)\right]\vec{e}_x - \left[\sigma_{xx}^{cds}(t,\zeta)\cos(\alpha) + \sigma_{xy}^{cds}(t,\zeta)\sin(\alpha)\right]\vec{e}_y\right\} \tag{62}$$

$\sigma_{kl}^{cds}(t,\zeta)$ is the stress field at t due to the interaction of the crack with a unit delta-Dirac dislocation density at ζ^*. ζ^* is symmetrically located with respect to ζ: if $t = \zeta$ corresponds to the rectangular coordinate (x,y) then ζ^* corresponds to (x,-y).

6. The force $\vec{F}_{ds}$ due to the symmetrically located dislocations.

$$\vec{F}_{ds}(t) = b(t)\int_0^L b(\zeta)\vec{K}_4(t,\zeta)d\zeta \tag{63}$$

where

$$\vec{K}_4(t,\zeta) = \left\{\left[\sigma_{xy}^{ds}(t,\zeta)\cos(\alpha) + \sigma_{yy}^{ds}(t,\zeta)\sin(\alpha)\right]\vec{e}_x - \left[\sigma_{xx}^{ds}(t,\zeta)\cos(\alpha) + \sigma_{xy}^{ds}(t,\zeta)\sin(\alpha)\right]\vec{e}_y\right\} \tag{64}$$

$\sigma_{kl}^{ds}(t,\zeta)$ is the stress field at t due to a unit delta-Dirac dislocation density at ζ^*.

Now equilibrium requires:

$$\vec{F}_c + \vec{F}_d + \vec{F}_{cd} + \vec{F}_f + \vec{F}_{cds} + \vec{F}_{ds} = 0 \tag{65}$$

We again only retain $\vec{F}_c$, $\vec{F}_d$ and $\vec{F}_f$. Iteration is now based on the solution of

$$\vec{F}_0(t) + \int_0^L \left[\vec{K}_2(t,\zeta) + \vec{K}_3(t,\zeta) + \vec{K}_4(t,\zeta)\right] b_0(\zeta)d\zeta + \\ + \int_0^L \vec{K}_1(t,\zeta)b_1(\zeta)d\zeta + c_f\vec{e}_s = 0 \tag{66}$$

Due to the significance of the correction forces, iteration is more important in the symmetric case.

The dislocation distribution.

The determination of the edge dislocation distribution corresponding to the calculated force field amounts to the solution of the following Cauchy integral equation for b(x):

$$\int_0^L \frac{b(x)\mu dx}{2\pi(1-\nu)(x-y)} = f(y) \tag{67}$$

or

$$\int_0^L \frac{\varphi(x)dx}{x-y} = f(y) \tag{68}$$

where

$$\varphi(x) = \frac{\mu b(x)}{2\pi(1-\nu)} \tag{69}$$

The solution of (68) which is zero at L is given by Mikhlin [13] p 130:

$$\varphi(t) = \frac{1}{\pi^2\sqrt{t(L-t)}}\left\{\int_0^L \frac{[\zeta(L-\zeta)]^{1/2}}{t-\zeta} f(\zeta)d\zeta - \int_0^L \left[\frac{\zeta}{L-\zeta}\right]^{1/2} f(\zeta)d\zeta\right\} \tag{70}$$

$$t \in [0, L] \tag{71}$$

The first integral is a Cauchy integral whose singularity can be removed as follows: we write the integral as one centered about the singularity and the rest: for $t \leq L/2$ we get:

$$\begin{aligned} I &= \int_0^L \frac{[\zeta(L-\zeta)]^{1/2}}{t-\zeta} f(\zeta)d\zeta = \\ &\int_{-t}^{t} [(t-u)(L-t+u)]^{1/2} f(t-u)\frac{du}{u} + \int_{2t}^{L} \frac{[\zeta(L-\zeta)]^{1/2}}{t-\zeta} f(\zeta)d\zeta \end{aligned} \tag{72}$$

Then we subtract the constant contribution of the numerator of the first integral which removes the singularity. In this way we obtain:

for $t \leq L/2$:

$$\begin{aligned} I &= \int_{-t}^{t} \left\{[(t-u)(L-t+u)]^{1/2} f(t-u) - [t(L-t)]^{1/2} f(t)\right\}\frac{du}{u} \\ &+ \int_{2t}^{L} \frac{[\zeta(L-\zeta)]^{1/2}}{t-\zeta} f(\zeta)d\zeta \end{aligned} \tag{73}$$

for $t > L/2$:

$$I = \int_0^{t-L} \frac{[\zeta(L-\zeta)]^{1/2}}{t-\zeta} f(\zeta)d\zeta$$

$$+ \int_{t-L}^{L-t} \left\{ [(t-u)(L-t+u)]^{1/2} f(t-u) - [t(L-t)]^{1/2} f(t) \right\} \frac{du}{u} \tag{74}$$

Results and discussion.

We ran the computer program for α = 45°, 55°, 60°, 70° and 80°. These angles were chosen because experimentally edge dislocation emission happened mainly in a direction within 45° to 90° angles with the crack plane.

Figures 3 to 7 give a detailed overview of our scheme for one crack line with α = 60°. Crack length and load were taken unity. Figure 3 represents the force field due to the crack load on an edge dislocation with angle 60°. Figure 4 displays the line along which the forces are inclined over 60°. The plastic zone is given by that portion of the line that has a line of inclination of 60°(fig 5) to within a tolerance of 4°. The force f(t) along the (normalized) plastic zone is given by fig 6. Finally fig 7 shows us the edge dislocation distribution along the plastic zone. We see that the method gives us the plastic zone and DFZ in a natural way.

The effects of subsequent iterations on the plastic zone location are represented in fig 8. It is clear that in the case of only one dislocation line iteration doesn not influence the results appreciably.

Fig 9 points out to the influence of the friction on the dislocation density. As long as the friction force does not exceed the minimum force density along the dislocation line, the extent of the plastic zone is not affected.

We also ran the program for different angles, the results of which are displayed in fig 10. We notice that the size of the DFZ is not really dependent on the angle of inclination, while the plastic zone size clearly is. There is a general trend for the plastic zone to get shorter with greater angles. The forces along the plastic zone and the dislocation distribution increase slightly with larger angles.

The situation for the two symmetric dislocation zones is different. Fig 11 makes it clear that iteration is quite important. The forces neglected in the zeroth iteration are indeed significant. Fig 12 displays an overview for several angles of inclination. We see that the dislocation zones are slightly smaller than the case of a single dislocation line.

Summary

In this article we studied the existence of a plastic zone consisting of edge dislocations around a mode I crack. The analysis showed a decreasing plastic zone size for an increasing angle of inclination. The presence of a DFZ emerged as a natural product of the calculations. The present method can be applied to mode II

problems and the interaction of the crack with material defects. The influence of the generation of Helium bubbles on size and location of the plastic zone will be discussed in a subsequent paper.

Acknowledgement

The authors express their appreciation to Professor R.G. Mills for the encouragement and support recieved.

Appendix

We can express $f(x,y,t)$, $h(x,y,t)$, $j(x,y,t)$, $f^{*}(x,y,t)$, $h^{*}(x,y,t)$, $h_s(x,y,t)$ and $f_s(x,y,t)$ as a function of 3 other functions $H_1(p)$, $H_2(p,q)$ and $H_3(x,y,t)$:

$$f(x,y,t) = -H_1(y) \tag{75}$$

$$h(x,y,t) = H_2(y,y) \tag{76}$$

$$j(x,y,t) = H_2(x,y) \tag{77}$$

$$f^{*}(x,y,t) = -H_1(t) \tag{78}$$

$$h^*(x,y,t) = H_2(y,t) \tag{79}$$

$$h_s(x,y,t) = H_2(x,t) \tag{80}$$

$$f_s(x,y,t) = H_3(x,y,t) \tag{81}$$

where

$$H_1(p) = \frac{-1}{2\sqrt{2}}(g_1^{-1/2} + g_2 g_1^{-1})^{-1/2}\left[-\frac{1}{2}g_1^{-3/2}g_{1p} + g_{2p}g_1 - g_{1p}g_2 g_1^{-2}\right] \tag{82}$$

$$\begin{aligned} H_2(p,q) = {} & \frac{-1}{4\sqrt{2}}(g_1^{-1/2} + g_2 g_1^{-1})^{-3/2}\left[-\frac{1}{2}g_1^{-3/2}g_{1p} + g_{2p}g_1 - g_{1p}g_2 g_1^{-2}\right] x \\ & x\left[-\frac{1}{2}g_1^{-3/2}g_{1q} + g_{2q}g_1 - g_{1q}g_2 g_1^{-2}\right] + \frac{1}{2\sqrt{2}}(g_1^{-1/2} + g_2 g_1^{-1})^{-1/2} x \\ & x\left\{-\frac{1}{2}g_1^{-3/2}g_{1pq} + (g_{2pq}g_1 + g_{2p}g_{1q} - g_{1pq}g_2 - g_{1p}g_{2q})g_1^{-2} + \right. \\ & \left. + \frac{3}{4}g_1^{-5/2}g_{1q}g_{1p} - (g_{2p}g_1 - g_{1p}g_2)2g_{1q}g_1^{-3}\right\} \end{aligned} \tag{83}$$

$p,q = x,y$ or t

$$\begin{aligned} H_3(x,y,t) = {} & \frac{-2x(g_{3ty} + g_{4ty})}{(g_3 + g_4)(g_3 + g_4)^2 - 4x^2)^{1/2}} + \\ & + \frac{2x(g_{3t} + g_{4t})}{(g_3 + g_4)^2((g_3 + g_4)^2 - 4x^2)}\left[(g_{3y} + g_{4y})((g_3 + g_4)^2 - 4x^2)^{1/2} + \right. \\ & \left. + (g_3 + g_4)^2(g_{3y} + g_{4y})((g_3 + g_4)^2 - 4x^2)^{-1/2}\right] \end{aligned} \tag{84}$$

in which:

$$g_1 = (y^2 + t^2 - x^2)^2 + 4x^2y^2 \tag{85}$$

$$g_2 = y^2 + t^2 - x^2 \tag{86}$$

$$g_3 = \left[y^2 + (t + x)^2\right]^{1/2} \tag{87}$$

$$g_4 = \left[y^2 + (x - t)^2\right]^{1/2} \tag{88}$$

The subscripts x, y, t, p and q represent partial derivatives with respect to x, y, t, p, and q.

Bibliography

1. J.A. Horton and S.M Ohr, *J.Mater.Sci.* **17** (1982) p. 3140.

2. S.M. Ohr and J. Narayan, *Philos.Mag. A* **41** (1980) p. 81.

3. S. Kobayashi and S.M. Ohr, *Philos.Mag. A* **42** (1980) p. 763.

4. S.M.Ohr and S. Kobayashi, *J.Met.* **32** (1980) p. 35.

5. S. Kobayashi and S.M. Ohr, *Scr.Metall.* **15** (1981) p. 343.

6. B.A. Bilby, A.H. Cottrell and K.H. Swinden, *Proc.R.Soc.London Ser. A* **272** (1963) p. 304.

7. B.S. Majumdar and S.J.Burns, *Int.J.Fracture* **21** (1983) p. 229.

8. S.-J. Chang and S.M.Ohr, *J.Appl.Phys.* **52** (1981) p. 7174.

9. S.-J. Chang and S.M. Ohr, *J.Appl.Phys.* **55** (1984) p. 3505.

10. I.N. Sneddon and M. Lowengrub, *Crack Problems in the Classical Theory of Elasticity,* John Wiley & Sons, Inc (1969).

11. J.P. Hirth and J. Lothe, *Theory of Dislocations*, Mc Graw-Hill Book Company (1968).

12. F.R.N. Nabarro, *Dislocations in Solids*, North-Holland Publishing Company (1979).

13. S.G. Mikhlin, *Integral Equations*, Macmillan Company (1979).

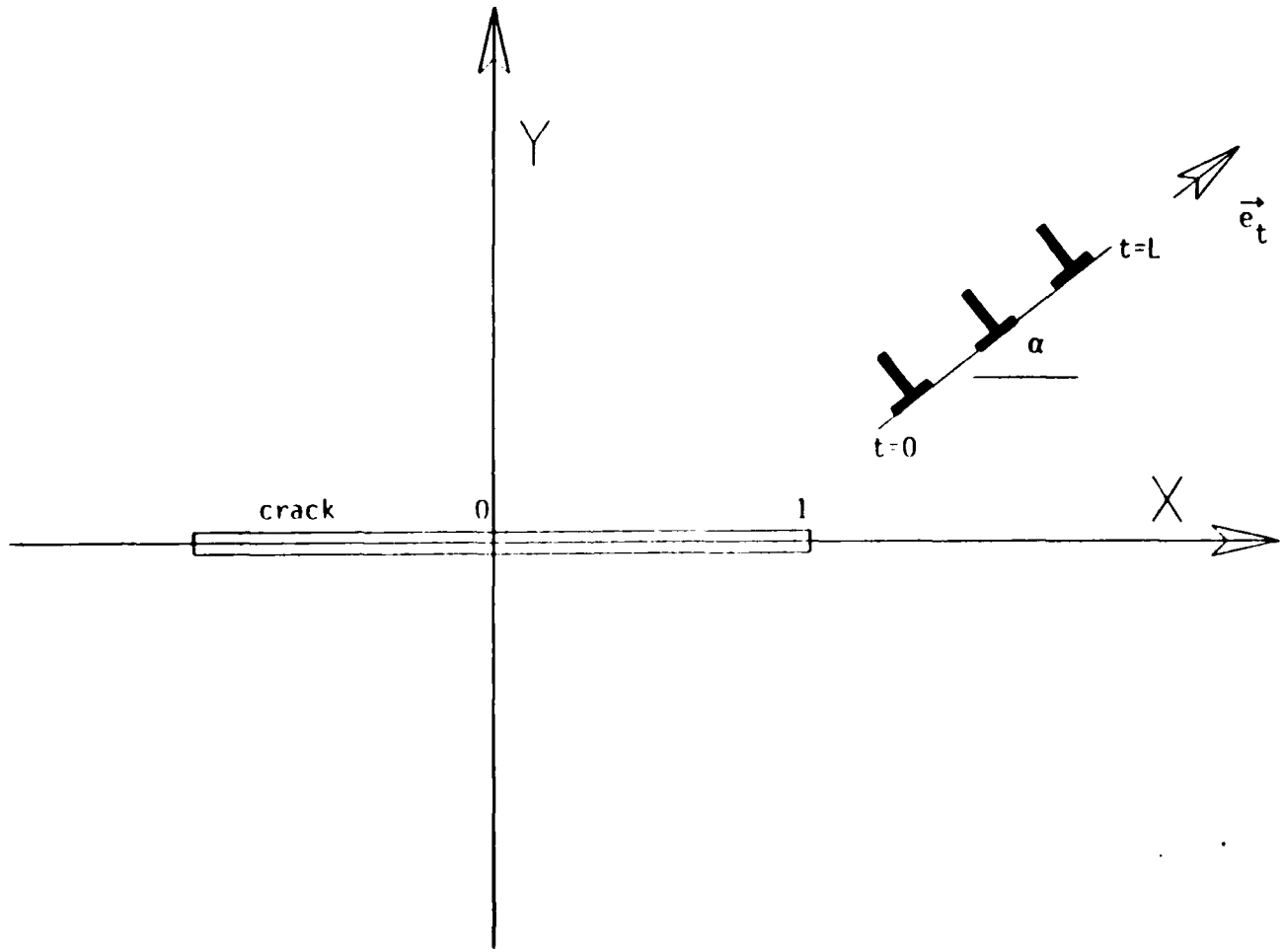

Fig 1: Mode I crack with a line distribution of edge dislocations.

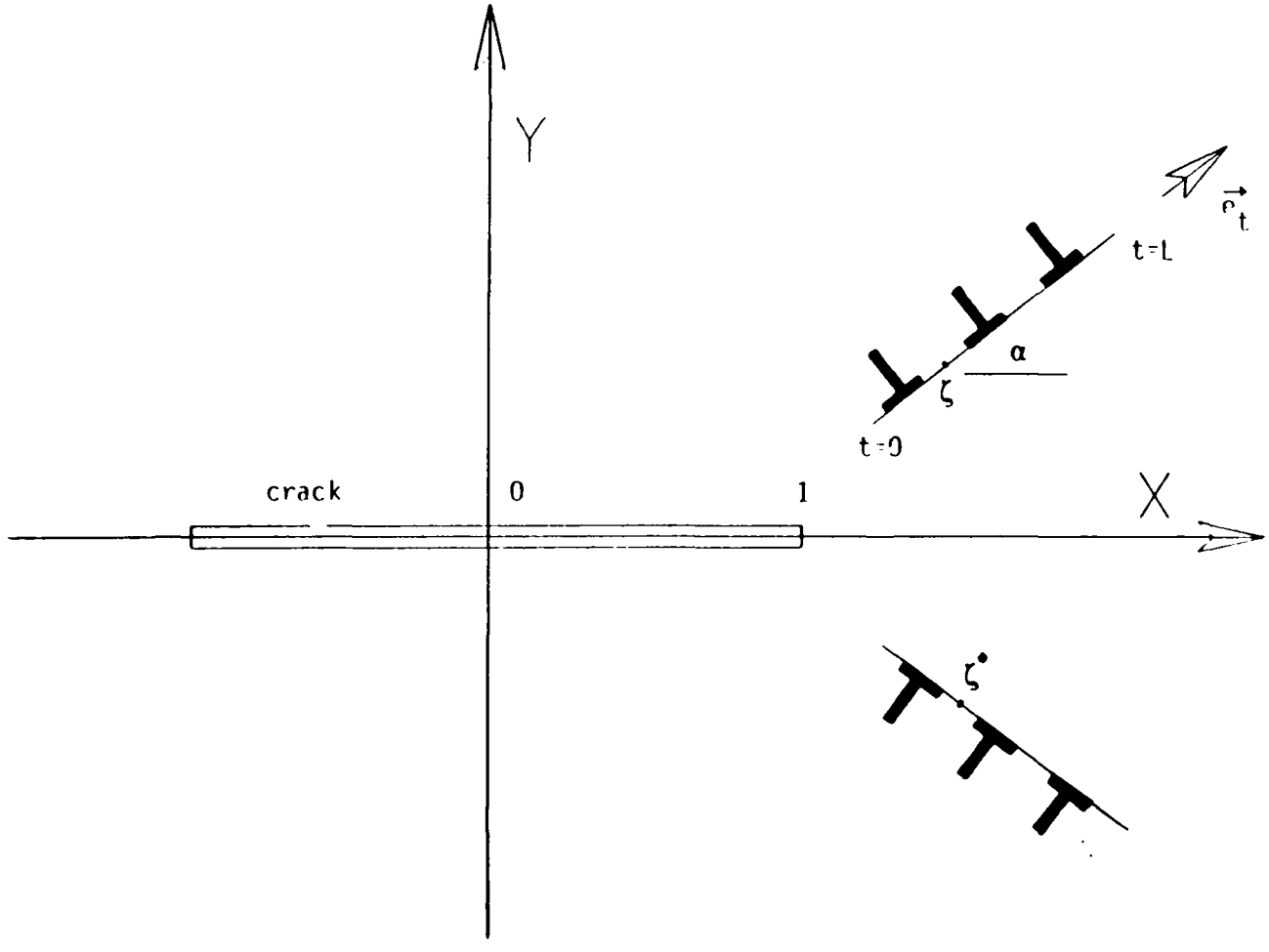

Fig 2: Mode I crack with two symmetric line distributions of edge dislocations.

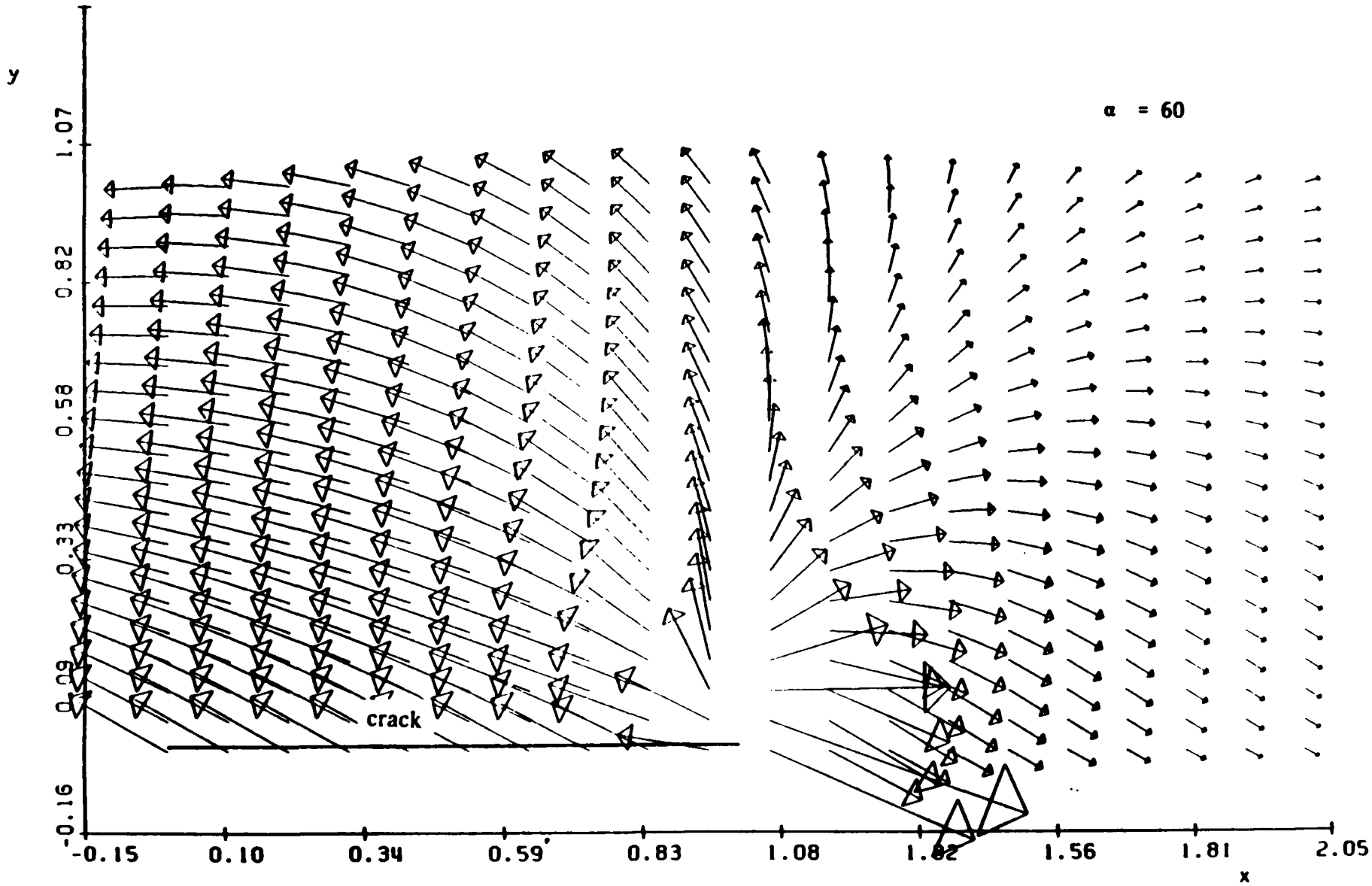

Fig 3: Force field on a dislocation inclined 60°.

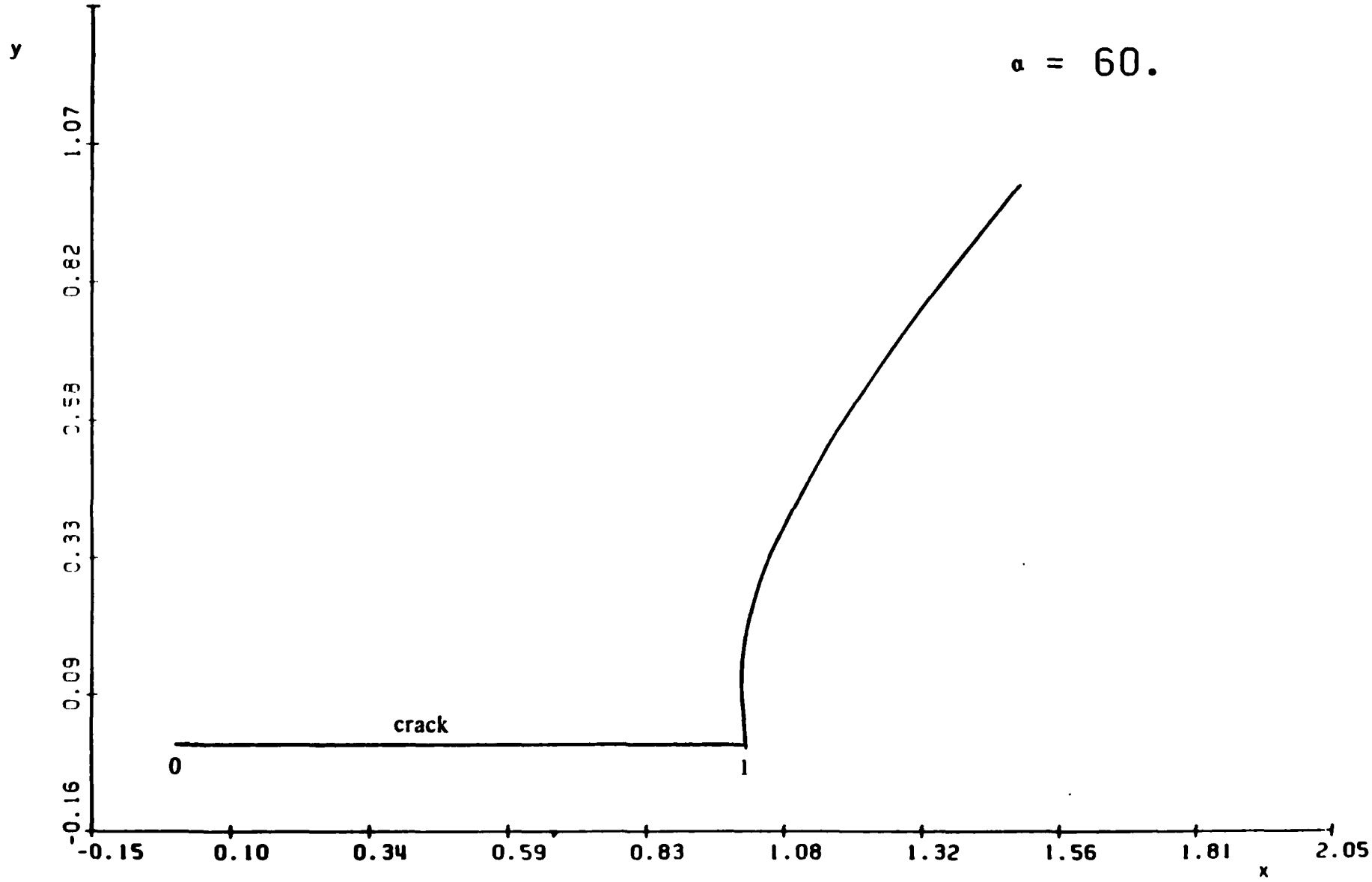

Fig 4: Line on which forces are inclined 60°.

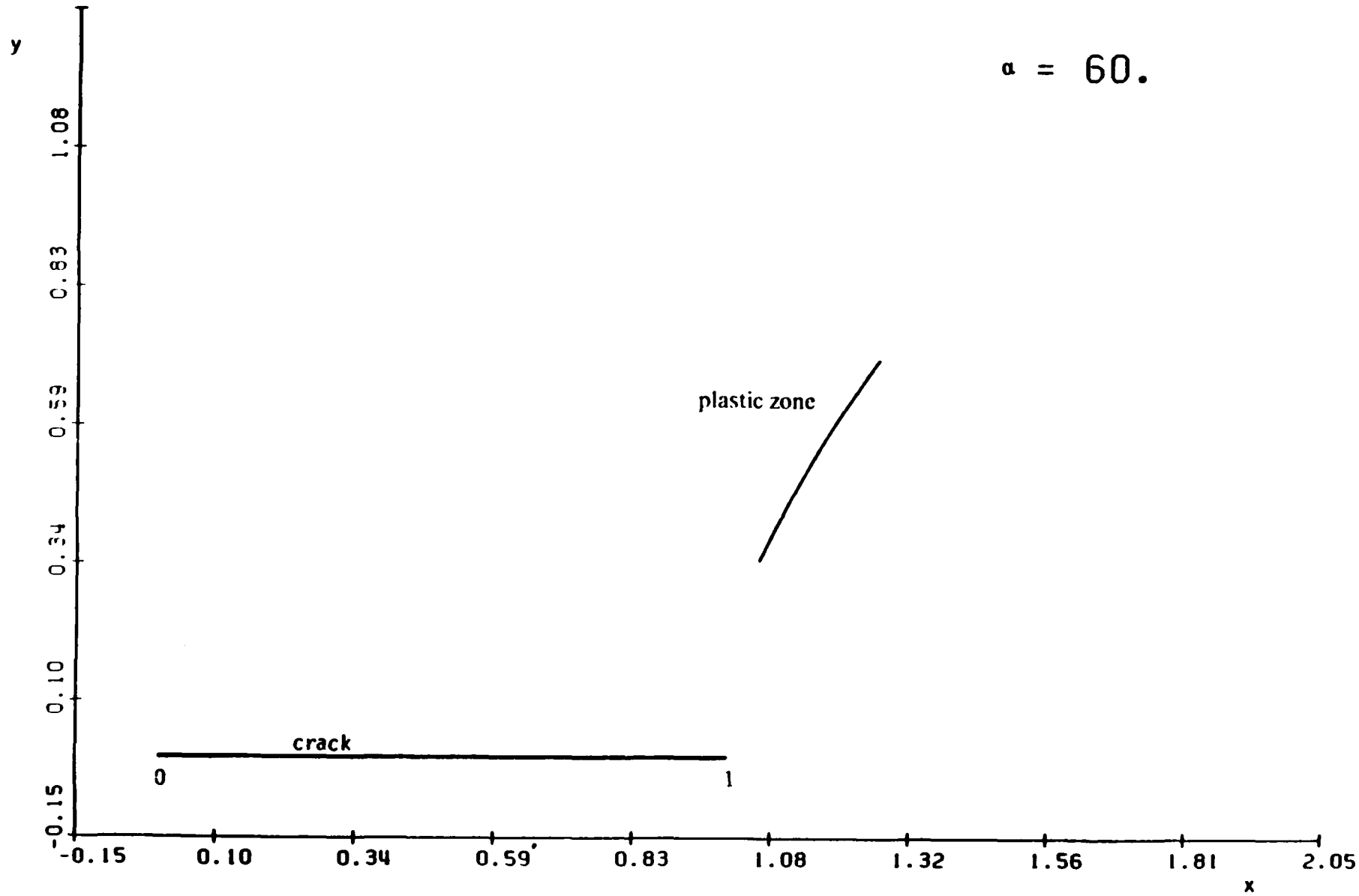

Fig 5: Plastic zone size.

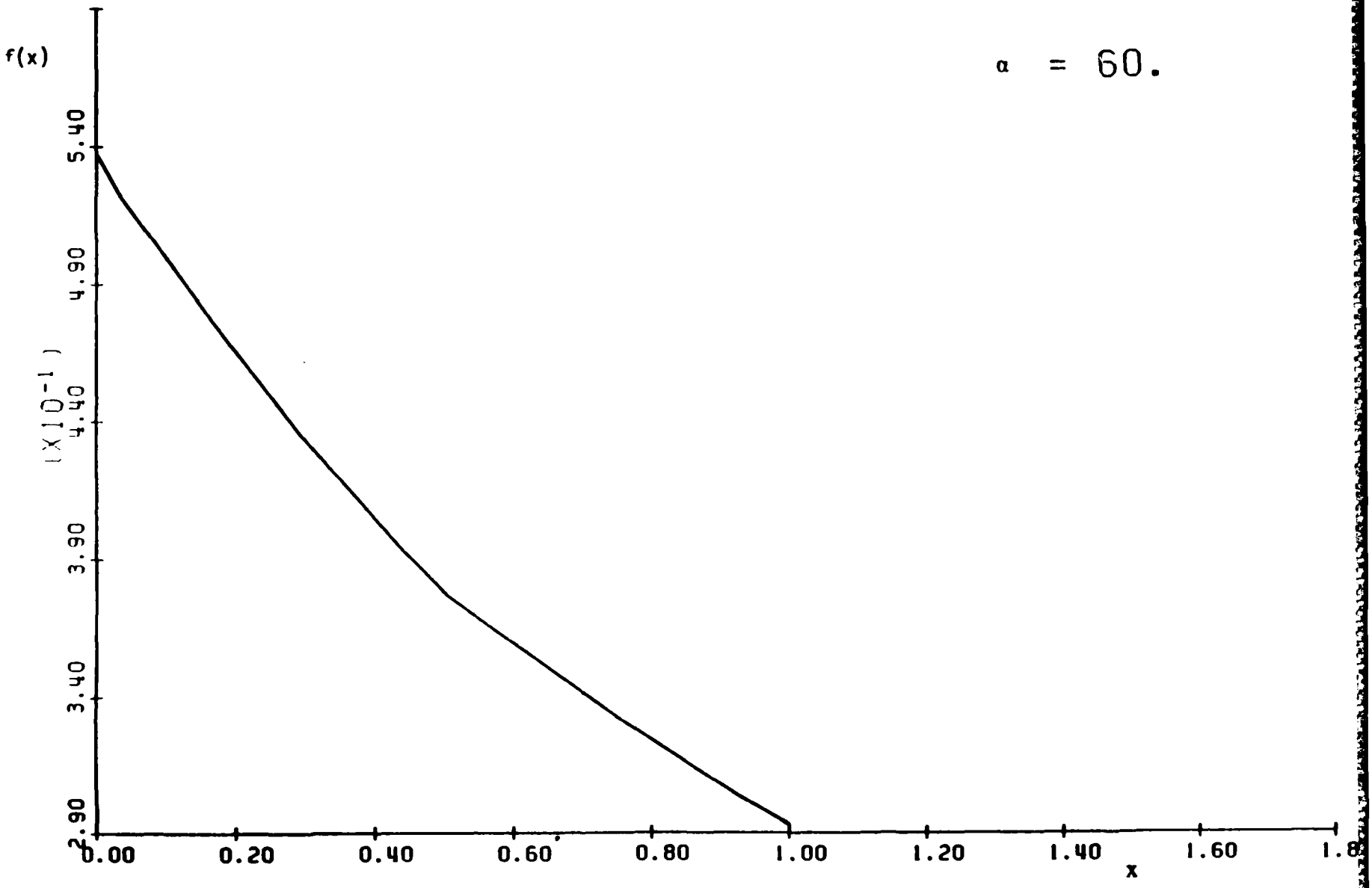

Fig 6: The force f(t) along the plastic zone.

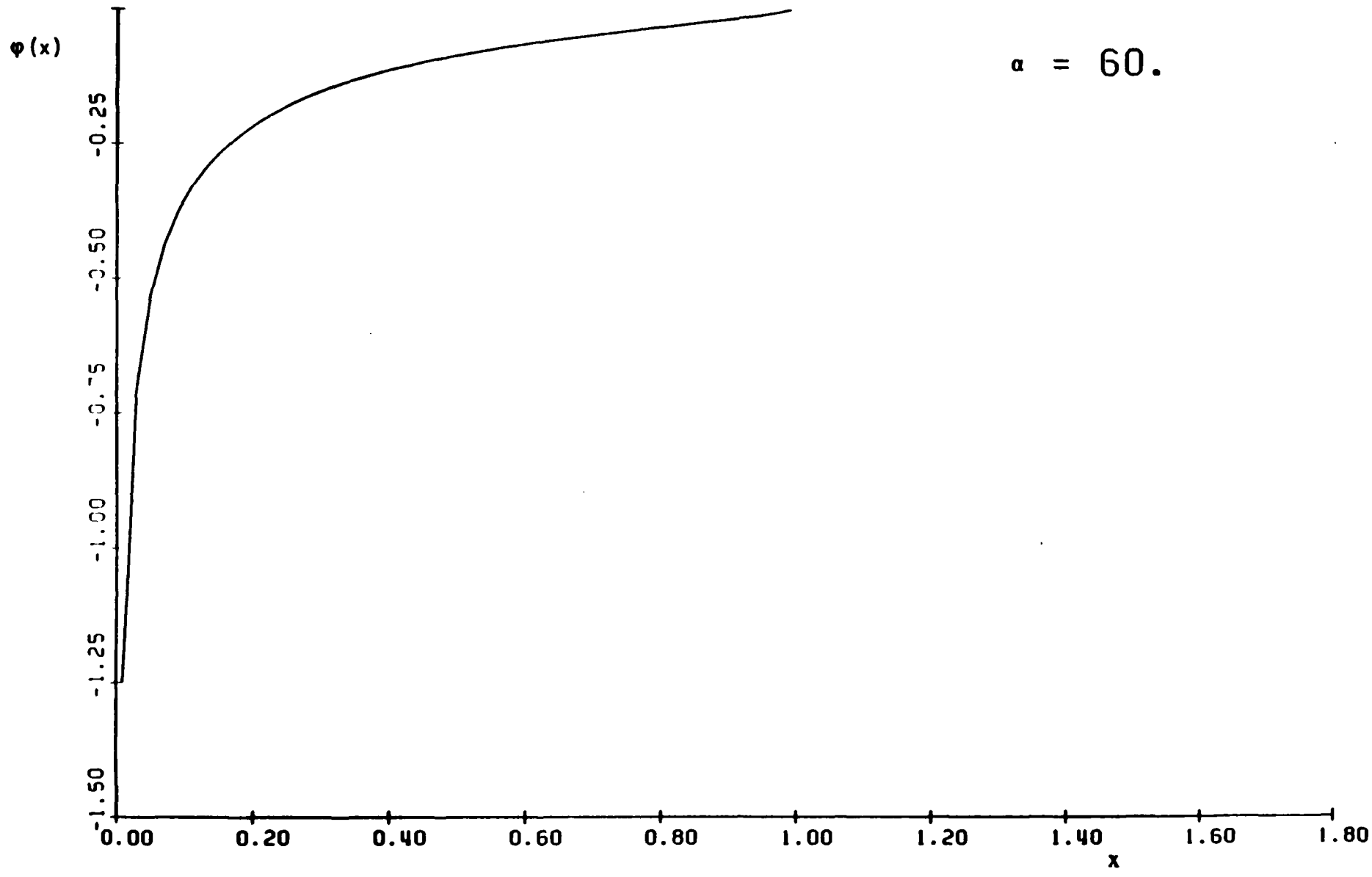

Fig 7: Edge dislocation distribution $\varphi(x)$.

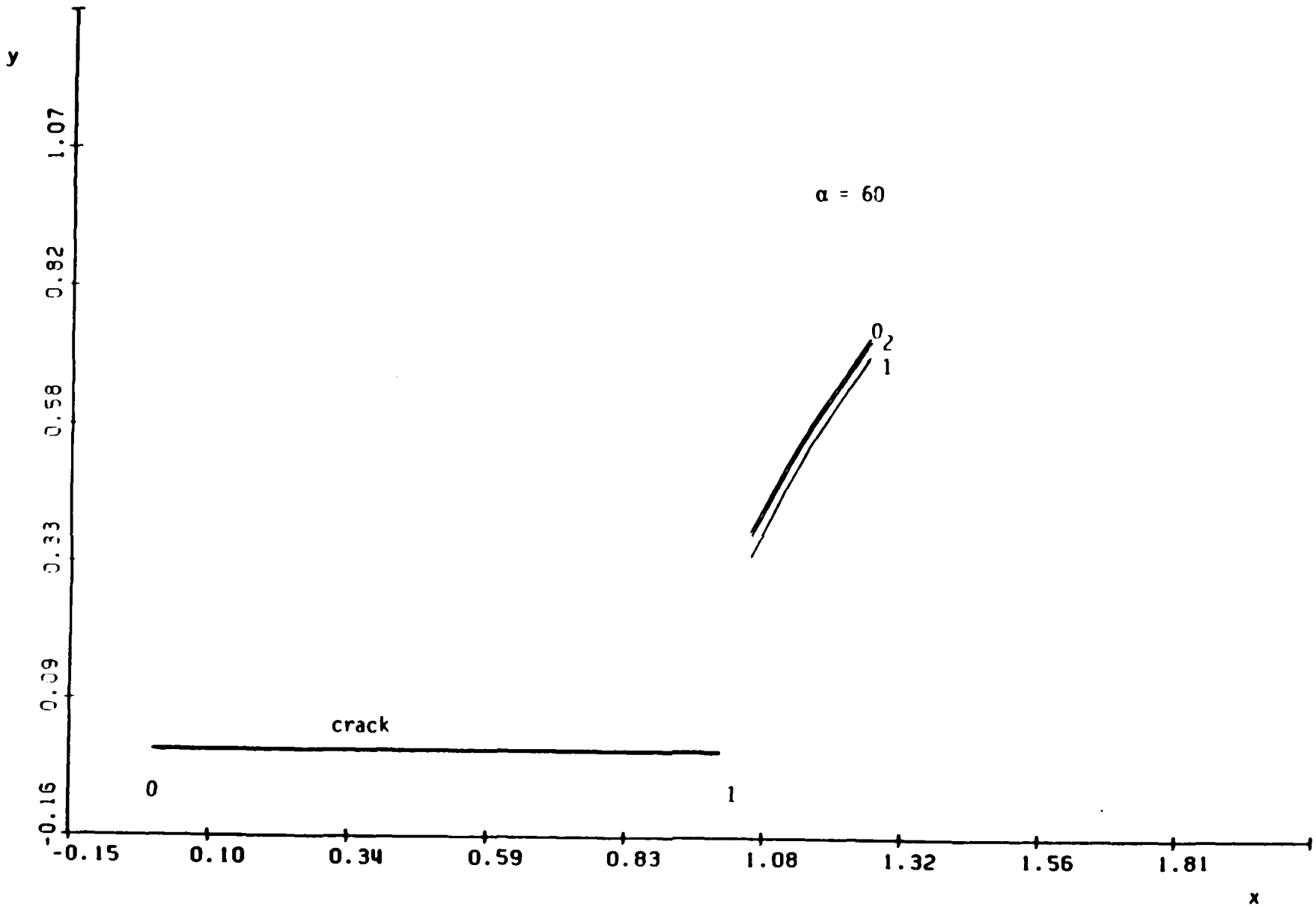

Fig 8: Plastic zone size (three iterations, 60°).

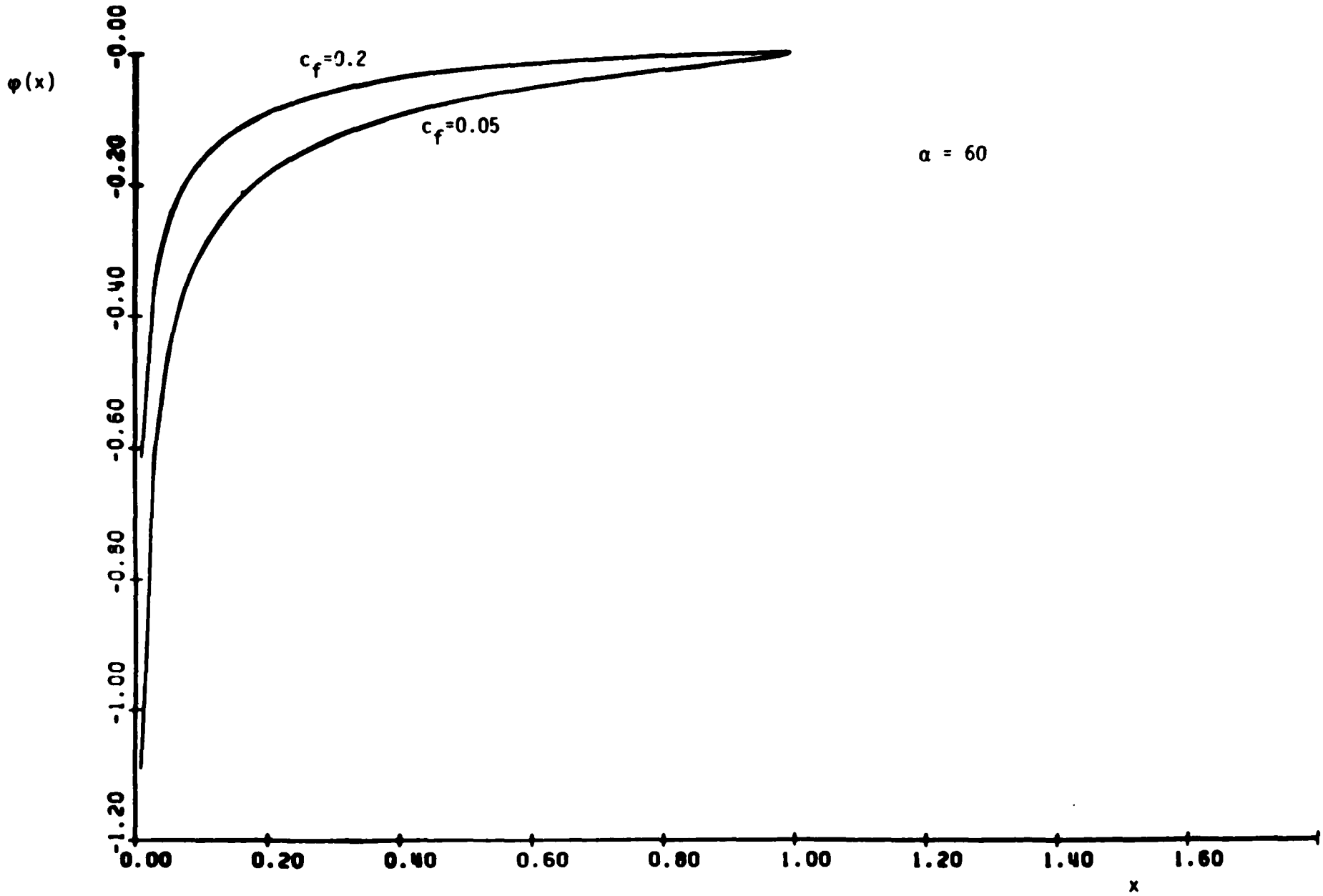

Fig 9: Influence of friction on the dislocation density.

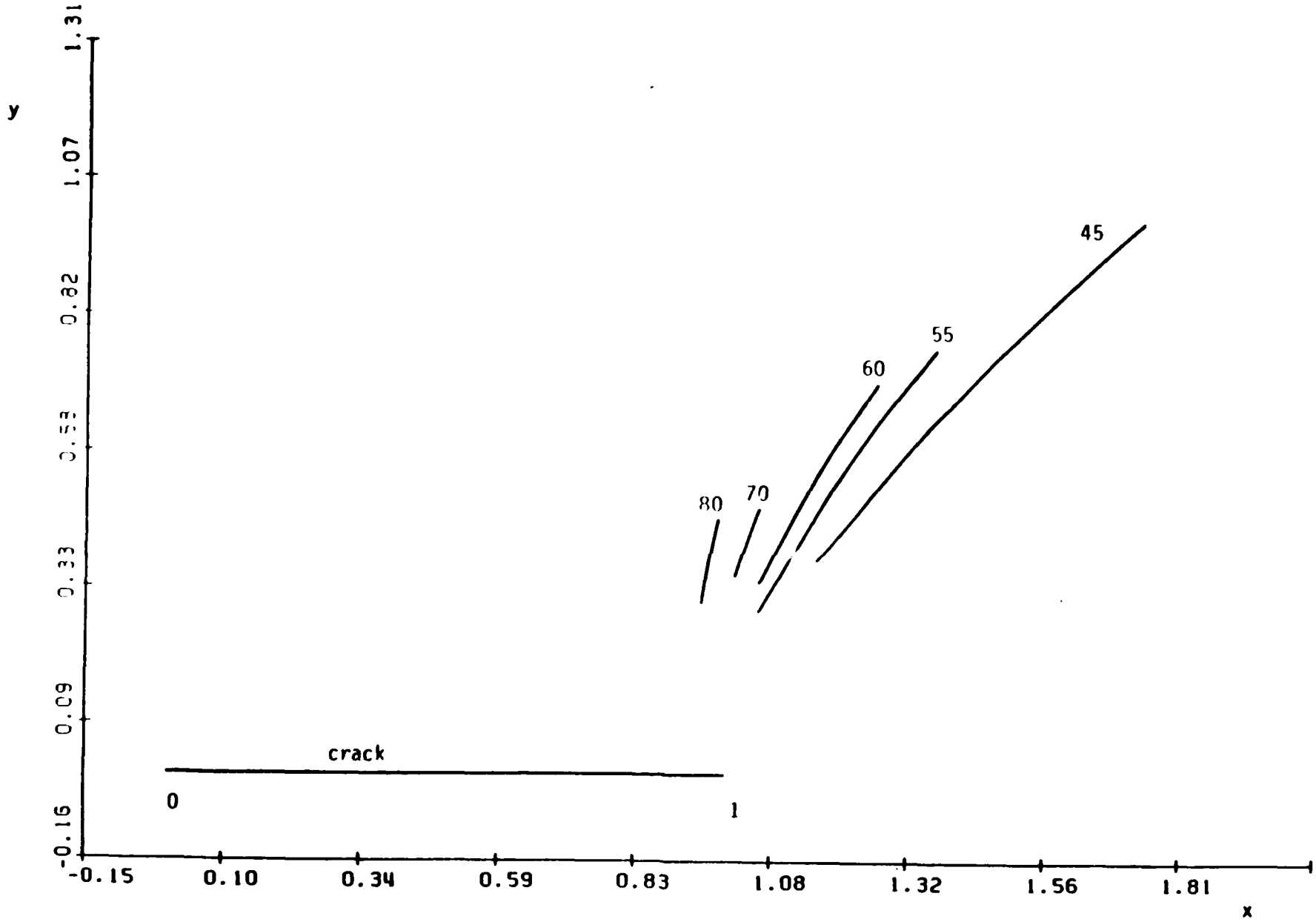

Fig 10: Plastic zone size with the angle of inclination of dislocations.

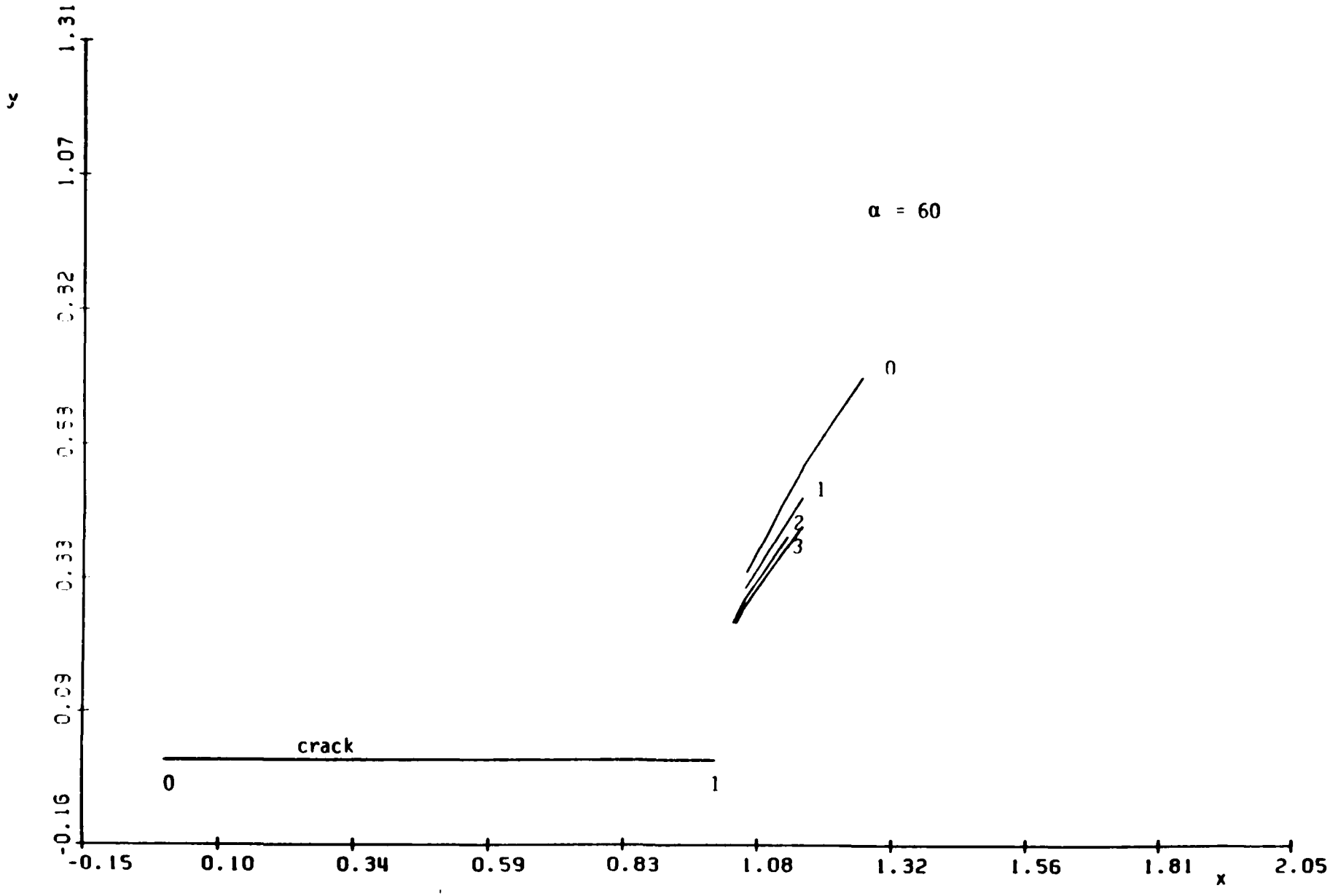

Fig 11: Plastic zone size for two symmetric dislocation lines (four iterations, 60°).

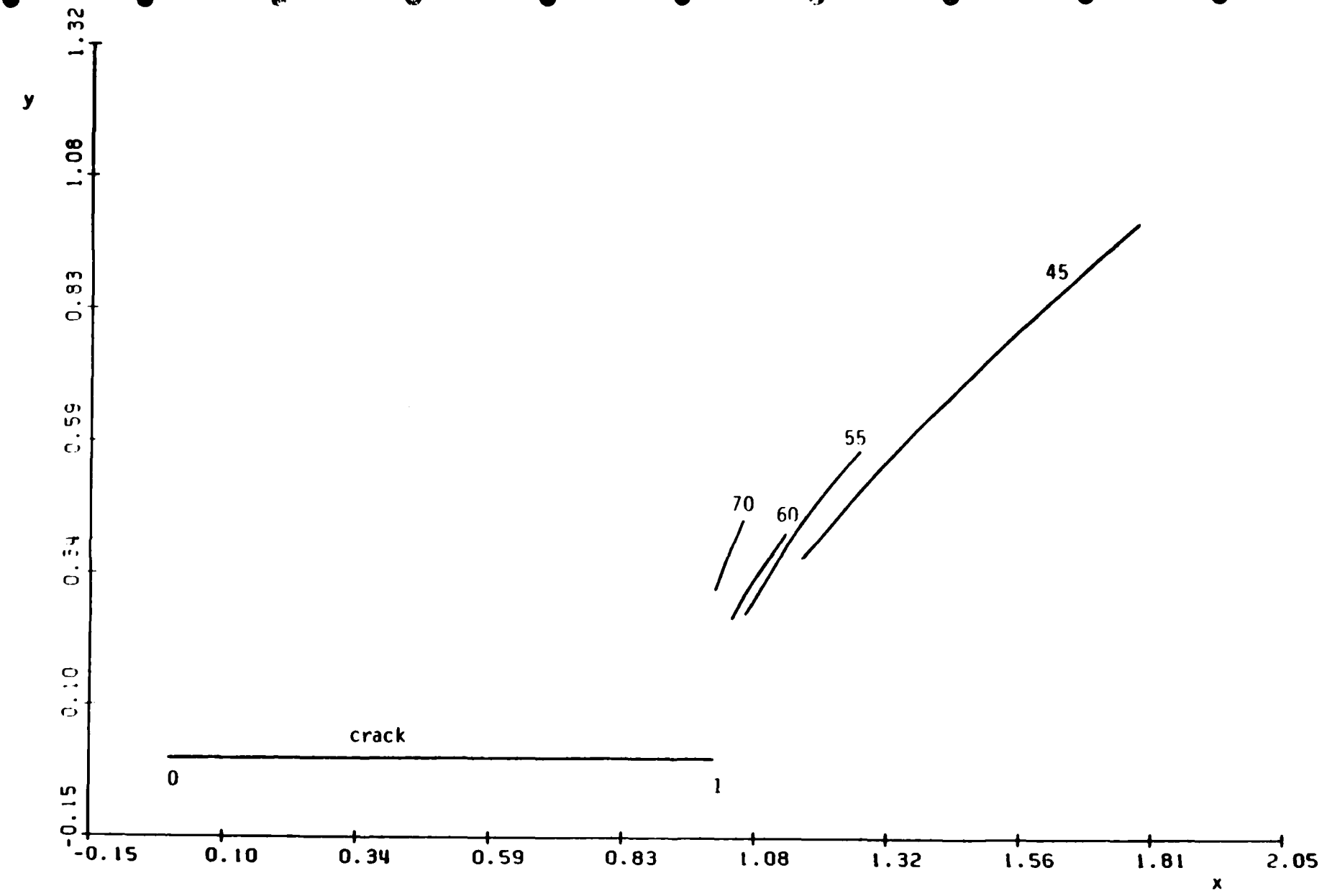

Fig 12: Plastic zone size for different angles of inclination of two symmetric dislocations.

SECURITY CLASSIFICATION OF THIS PAGE (When Data Entered)

REPORT DOCUMENTATION PAGE

READ INSTRUCTIONS BEFORE COMPLETING FORM

1. REPORT NUMBER: ARO 22967.2-EG

2. GOVT ACCESSION NO.: AD-A175 610

3. RECIPIENT'S CATALOG NUMBER:

4. TITLE (and Subtitle): Inclined Pileup of Edge Dislocations Near the Crack Tip

5. TYPE OF REPORT & PERIOD COVERED: Technical Report December 1986

6. PERFORMING ORG. REPORT NUMBER:

7. AUTHOR(s):

G.D.C. Dhondt
A.C. Eringen

8. CONTRACT OR GRANT NUMBER(s): DAAL03-86-K-0019

9. PERFORMING ORGANIZATION NAME AND ADDRESS:

Princeton University
Princeton, N.J. 08544

10. PROGRAM ELEMENT, PROJECT, TASK AREA & WORK UNIT NUMBERS:

11. CONTROLLING OFFICE NAME AND ADDRESS:

U.S. Army Research Office
P.O. Box 12211, Res. Triangle Park, N.C. 27709

12. REPORT DATE: December 3, 1986

13. NUMBER OF PAGES:

14. MONITORING AGENCY NAME & ADDRESS (if different from Controlling Office):

15. SECURITY CLASS. (of this report): Unclassified

15a. DECLASSIFICATION/DOWNGRADING SCHEDULE:

16. DISTRIBUTION STATEMENT (of this Report):

APPROVED FOR PUBLIC RELEASE: DISTRIBUTION UNLIMITED

17. DISTRIBUTION STATEMENT (of the abstract entered in Block 20, if different from Report):

18. SUPPLEMENTARY NOTES

The findings of this report are not to be construed as an official Department of the Army position, unless so designated by other authorized documents.

19. KEY WORDS (Continue on reverse side if necessary and identify by block number)

Dislocation, Crack, Fracture, Plastic Zone

20. ABSTRACT (Continue on reverse side if necessary and identify by block number)

The formation of a plastic zone, in the form of a linear array of inclined edge dislocations in front of a mode I crack in plane strain, is studied. The direction of the force field on an edge dislocation due to the crack load allows for the determination of the plastic zone as a function of the inclination angle. The dislocation distribution along the plastic zone is found from force equilibrium considerations. The results show the presence of a dislocation free zone (DFZ) and a shrinking of the plastic zone size with greater angle of inclination. The latter angle does not seem to influence

DD FORM 1 JAN 73 1473 EDITION OF 1 NOV 65 IS OBSOLETE
S/N 0102-014-6601

SECURITY CLASSIFICATION OF THIS PAGE (When Data Entered)

20. (continued)

the DFZ size. The way in which we determined the stress field allows us to study the influence of defects on the plastic zone formation.

END

2-81

DTIC