AD-A169 062 TSAR (THEATER SIMULATION OF AIRBASE RESOURCES) DATABASE 1/3
DICTIONARY A-10 WITH INTERMEDIATE MAINTENANCE(U)
ORLANDO TECHNOLOGY INC SHALIMAR FL D ROBINSON ET AL.
UNCLASSIFIED 25 APR 86 F/G 1/3 NL

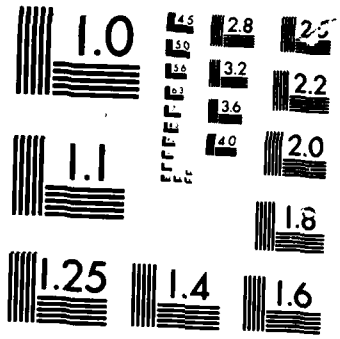


MICROCOPY CHART

AD-A169 062

# TSAR
## DATABASE DICTIONARY
# A-10
## With Intermediate Maintenance

25 APRIL 1986

DTIC
ELECTE
JUN 30 1986
S D
A

DTIC FILE COPY

*Prepared for*
TACTICAL SUPPORT DIVISION
Air Force Center for Studies and Analyses
Pentagon, Washington, D.C. 20330-5420

*Prepared by*
ORLANDO TECHNOLOGY, INC.
P.O. Box 855
Shalimar, Florida 32579

This document has been approved for public release and sale; its distribution is unlimited.

UNCLASSIFIED

86 6 27 018

# PREFACE

The Assistant Chief of Staff for Studies and Analyses (AF/SA) has a continuing requirement for investigations into advanced fighter aircraft operations and support topics. A recurring need involves studies of readiness, survivability, and sustainability. Several methodologies have been used over the years. The current state-of-the-art techniques for these purposes are two Monte Carlo simulation models developed in the late 1970s by The Rand Corporation, Theater Simulation of Airbase Resources (TSAR) and TSAR Inputs using Airbase Damage Assessment (TSARINA). These models, like other simulation models, are build to study and analyze a system's processes. In this case the "system" is the collection of resources called an airbase and the process of interest is the interaction of those resources resulting in the generation of aircraft sorties. A system's problem can often be described and studied through "what if" excursions about a defined base case. The base case and the excursions of interest could be viewed as related problem scenarios. In both TSAR and TSARINA the scenario to be studied is modeled through the database. Therefore the analyst must know the logic embodied in the program structure, but most importantly, completely understand the scenario as described in an extensive database. The differences between scenarios involving the same aircraft type may only involve changing several cards, but building the components of the baseline database and/or acquiring sufficient understanding of what is contained in such a database are significant tasks. Hence the need for a disciplined development and adequate documentation. Given that a baseline database exists, the modeler must replace, merge, or modify various database segments to fashion a new scenario or to specify excursions from the base case. Alternative data segments which are clearly documented are therefore often needed. The availability and limited documentation of databases for both TSAR and TSARINA impose practical limitations to their usefulness.

The author of TSAR and TSARINA, Don Emerson, has provided analysts with extremely powerful tools for tactical support analysis. They are very well written and documented. The real problem for the analyst is locating sources of data to make use of the full richness inherent in the models. It was clear to those of us at the Air Force Center for Studies and Analyses (AFCSA) that if our results and observations were going to be credible, the databases and assumptions they embodied would need to be documented. Our intent was to collect selected databases within AFCSA to support current and projected studies. Quality documentation of these databases was necessary to permit analysts to understand the assumptions, limitations, and level of detail that was being portrayed. The resultant availability of databases and standardization of documentation will not only directly support in-house investigations but will also facilitate studies across the analysis community. Because of the scope of such a task, a contract was let to ensure its timely accomplishment.

Orlando Technology, Inc., was awarded a competitive contract for TSAR/TSARINA support tasks. The tasks focus around the model databases and database segments. They began with the existing model databases and updated them based on the most current government data available. These databases were to be documented in three ways. The first is a dictionary for each database and separate database segment, which translates the database codes to their English equivalents. Secondly, graphic network models are needed for those portions of the database which model decision logic networks for repair tasks. And finally,

an index is needed to cross-reference the database segments, dictionary, and the network models to facilitate their use by modelers and analysts. This A-10 database dictionary incorporates all three into a single document for the case of a unit with intermediate maintenance capability. The long term intent is to build on these basic databases by the use of a database management system to facilitate changes, updates, and analysis scenario development. As the models mature and the user community grows, the model databases will continue to evolve and grow in depth and breadth. This document should be viewed as an advanced prototype which will hopefully continue to mature and increase in usefulness.

Our hope is that you will wear out this document through constant useage. Pass along your comments and criticisms so that future improvements can incorporate the user community's collective insights.

JOHN R. FOLKESON, Lt Col, USAF
AFCSA/SAGP
Washington, DC 20330-5420

Accession For

A1

UNCLASSIFED

SECURITY CLASSIFICATION OF THIS PAGE

# REPORT DOCUMENTATION PAGE

| | |
|---|---|
| 1a. REPORT SECURITY CLASSIFICATION<br>UNCLASSIFIED | 1b. RESTRICTIVE MARKINGS<br>AD-A169062 |
| 2a. SECURITY CLASSIFICATION AUTHORITY | 3. DISTRIBUTION/AVAILABILITY OF REPORT<br>Unlimited Distribution |
| 2b. DECLASSIFICATION/DOWNGRADING SCHEDULE | |
| 4. PERFORMING ORGANIZATION REPORT NUMBER(S) | 5. MONITORING ORGANIZATION REPORT NUMBER(S) |
| 6a. NAME OF PERFORMING ORGANIZATION<br>Orlando Technology, Inc.<br>6b. OFFICE SYMBOL (If applicable) | 7a. NAME OF MONITORING ORGANIZATION<br>Tactical Support Division<br>Air Force Center for Studies and Analyses |
| 6c. ADDRESS (City, State and ZIP Code)<br>P.O. Box 855<br>Shalimar, Florida 32579 | 7b. ADDRESS (City, State and ZIP Code)<br>AFCSA/SAGP<br>Pentagon, Rm 1C370<br>Washington DC 20330-5420 |
| 8a. NAME OF FUNDING/SPONSORING ORGANIZATION<br>AF Center for Studies and Analyses<br>8b. OFFICE SYMBOL (If applicable)<br>AFCSA/SAGP | 9. PROCUREMENT INSTRUMENT IDENTIFICATION NUMBER |
| 8c. ADDRESS (City, State and ZIP Code)<br>AFCSA/SAGP<br>Pentagon, 1C370<br>Washington DC 20330-5420 | 10. SOURCE OF FUNDING NOS.<br>PROGRAM ELEMENT NO. / PROJECT NO. / TASK NO. / WORK UNIT NO |
| 11. TITLE (Include Security Classification) A-10 with Inter-TSAR Database Dictionary - mediate Maintenance | |
| 12. PERSONAL AUTHOR(S)<br>Dale Robinson, Cliff Gornto | |
| 13a. TYPE OF REPORT<br>Final<br>13b. TIME COVERED<br>FROM 8/1/85 TO 7/31/86 | 14. DATE OF REPORT (Yr., Mo., Day)<br>860425<br>15. PAGE COUNT |
| 16. SUPPLEMENTARY NOTATION | |
| 17. COSATI CODES<br>FIELD / GROUP / SUB. GR. | 18. SUBJECT TERMS (Continue on reverse if necessary and identify by block number)<br>TSAR, Simulation, Sortie Generations, Logistics, A-10 Database Dictionary, Capability Assessment, Support |

19. ABSTRACT (Continue on reverse if necessary and identify by block number)

A significant problem for analysts and simulation model users is the availability of complete documentation of input databases. The Theater Simulation of Airbase Resources (TSAR) model is no exception. This TSAR dictionary documents the A-10 database with intermediate maintenance by translating the database codes to their English equivalents, presents graphic network models for the decision logic networks for aircraft repair tasks, and a cross-reference index to facilitate its use by modelers and analysts.

DTIC ELECTE JUN 30 1986 A

| | |
|---|---|
| 20. DISTRIBUTION/AVAILABILITY OF ABSTRACT<br>UNCLASSIFIED/UNLIMITED ☒ SAME AS RPT. ☐ DTIC USERS ☐ | 21. ABSTRACT SECURITY CLASSIFICATION<br>UNCLASSIFIED |
| 22a. NAME OF RESPONSIBLE INDIVIDUAL<br>LtCol John R. Folkeson, Jr. | 22b. TELEPHONE NUMBER (Include Area Code)<br>(202) 697-0862<br>22c. OFFICE SYMBOL<br>AFCSA/SAGP |

DD FORM 1473, 83 APR EDITION OF 1 JAN 73 IS OBSOLETE.

UNCLASSIFIED

CONTENTS


CHAPTER I INTRODUCTION

I.1 DATA BASE PURPOSE . . . . . I-1
I.2 GENERAL DESCRIPTION OF THE DATA BASE . . . . . I-1

CHAPTER II TSAR CONTROL VARIABLES

II.1 CARD TYPE #1 . . . . . II-1
II.2 CARD TYPE #2/1 . . . . . II-2
II.3 CARD TYPE #2/2 . . . . . II-3
II.4 CARD TYPE #2/3 . . . . . II-4
II.5 CARD TYPE #2/4 . . . . . II-4
II.6 CARD TYPE #2/5 . . . . . II-4
II.7 CARD TYPE #3/1 . . . . . II-5
II.8 CARD TYPE #3/2 . . . . . II-6
II.9 CARD TYPE #3/3 . . . . . II-7
II.10 CARD TYPE #3/4 . . . . . II-8
II.11 CARD TYPE #3/5 . . . . . II-8
II.12 CARD TYPE #4/1 . . . . . II-9
II.13 CARD TYPE #4/2 . . . . . II-10
II.14 CARD TYPE #4/3 . . . . . II-11
II.15 CARD TYPE #4/4 . . . . . II-11

CHAPTER III RESOURCE REQUIREMENTS

III.1 AIRCRAFT, PART AND SUPPORT EQUIPMENT REPAIR DATA III-1
III.1.1 SHOP DESCRIPTION LIST . . . . . III-1
III.1.2 DISTRIBUTED SHOP DESCRIPTIONS (CARD TYPE #37) III-3
III.1.3 SHOP/TASK SEQUENCE DATA (CARD TYPE #29) . . . III-3
III.1.4 SHOP DATA . . . . . III-5
III.1.4.1 TSAR SHOP #1 -- FLIGHTLINE . . . . . III-5
III.1.4.2 TSAR SHOP #2 -- AIRFRAME REPAIR . . . . . III-7
III.1.4.3 TSAR SHOP #3 -- ELECTRICAL SHOP . . . . . III-9
III.1.4.4 TSAR SHOP #4 -- ENVIRONMENTAL SYSTEMS . . . III-11
III.1.4.5 TSAR SHOP #5 -- EGRESS SYSTEMS . . . . . III-13
III.1.4.6 TSAR SHOP #6 -- PNEUDRAULICS . . . . . III-14
III.1.4.7 TSAR SHOP #7 -- ENGINE . . . . . III-16
III.1.4.8 TSAR SHOP #8 -- AUTOPILOT . . . . . III-18
III.1.4.9 TSAR SHOP #9 -- AVIONICS/INSTRUMENTATION . . III-20
III.1.4.10 TSAR SHOP #10 -- SENSORS . . . . . III-22
III.1.4.11 TSAR SHOP #11 -- WHEEL/TIRE . . . . . III-24
III.1.4.12 TSAR SHOP #12 -- RADIO COMMUNICATIONS . . . III-25
III.1.4.13 TSAR SHOP #13 -- RADAR NAVIGATION . . . . . III-27
III.1.4.14 TSAR SHOP #14 -- ECM SYSTEMS . . . . . III-29
III.1.4.15 TSAR SHOP #15 -- INERTIAL SYSTEMS . . . . . III-31
III.1.4.16 TSAR SHOP #16 -- FIRE CONTROL . . . . . III-32
III.1.4.17 TSAR SHOP #17 -- WEAPON CONTROL . . . . . III-34
III.1.4.18 TSAR SHOP #18 -- MACHINE SHOP . . . . . III-36
III.1.4.19 TSAR SHOP #19 -- WELDING SHOP . . . . . III-37
III.1.4.20 TSAR SHOP #20 -- CAMERA SHOP . . . . . III-38
III.1.4.21 TSAR SHOP #21 -- HEAVY REPAIR . . . . . III-39
III.1.4.22 TSAR SHOP #22 -- AGE REPAIR . . . . . III-42
III.1.4.23 TSAR SHOP #23 -- FUEL SYSTEMS . . . . . III-43
III.1.4.24 TSAR SHOP #24 -- N.D.I./CORR. CNTL/PARACHUTE III-45
III.1.4.25 TSAR SHOP #25 -- FLIGHTLINE . . . . . III-46
III.1.4.26 TSAR SHOP #28 -- MUNITIONS LOADING . . . . . III-47
III.1.4.27 TSAR SHOP #30 -- MUNITIONS ASSY/CIVIL ENGIN III-48
III.1.5 TASK NETWORK DATA . . . . . III-49
III.1.5.1 TASK #1 NETWORK . . . . . III-49
III.1.5.2 TASK #25 NETWORK . . . . . III-51
III.1.5.3 TASK #32 NETWORK . . . . . III-52
III.1.5.4 TASK #41 NETWORK . . . . . III-53
III.1.5.5 TASK #54 NETWORK . . . . . III-54
III.1.5.6 TASK #63 NETWORK . . . . . III-55
III.1.5.7 TASK #73 NETWORK . . . . . III-56

CHAPTER III RESOURCE REQUIREMENTS (CONTINUED)


III.1.5.8 TASK #82 NETWORK . . . . . III-57
III.1.5.9 TASK #92 NETWORK . . . . . III-58
III.1.5.10 TASK #106 NETWORK . . . . . III-59
III.1.5.11 TASK #109 NETWORK . . . . . III-59
III.1.5.12 TASK #112 NETWORK . . . . . III-60
III.1.5.13 TASK #125 NETWORK . . . . . III-61
III.1.5.14 TASK #135 NETWORK . . . . . III-62
III.1.5.15 TASK #144 NETWORK . . . . . III-63
III.1.5.16 TASK #157 NETWORK . . . . . III-64
III.1.5.17 TASK #165 NETWORK . . . . . III-64
III.1.5.18 TASK #168 NETWORK . . . . . III-65
III.1.5.19 TASK #171 NETWORK . . . . . III-66
III.1.5.20 TASK #179 NETWORK . . . . . III-67
III.1.5.21 TASK #192 NETWORK . . . . . III-68
III.1.5.22 TASK #209 NETWORK . . . . . III-69
III.1.5.23 TASK #217 NETWORK . . . . . III-70
III.1.5.24 TASK #234 NETWORK . . . . . III-71
III.1.5.25 TASK #241 NETWORK . . . . . III-72
III.1.5.26 TASK #258 NETWORK . . . . . III-73
III.1.5.27 TASK #301 NETWORK . . . . . III-76
III.1.5.28 TASK #312 NETWORK . . . . . III-77
III.1.5.29 TASK #318 NETWORK . . . . . III-78
III.1.5.30 TASK #334 NETWORK . . . . . III-79
III.1.5.31 TASK #338 NETWORK . . . . . III-79
III.1.5.32 TASK #340 NETWORK . . . . . III-80
III.1.5.33 TASK #343 NETWORK . . . . . III-81
III.1.5.34 TASK #350 NETWORK . . . . . III-82
III.1.5.35 TASK #355 NETWORK . . . . . III-82
III.1.5.36 TASK #358 NETWORK . . . . . III-83
III.1.5.37 TASK #367 NETWORK . . . . . III-84
III.1.5.38 TASK #373 NETWORK . . . . . III-85
III.1.5.39 TASK #383 NETWORK . . . . . III-86
III.1.5.40 TASK #395 NETWORK . . . . . III-87
III.1.5.41 TASK #410 NETWORK . . . . . III-88
III.1.5.42 TASK #418 NETWORK . . . . . III-88
III.1.5.43 TASK #420 NETWORK . . . . . III-89
III.1.5.44 TASK #429 NETWORK . . . . . III-90
III.1.5.45 TASK #435 NETWORK . . . . . III-91
III.1.5.46 TASK #441 NETWORK . . . . . III-92
III.1.5.47 TASK #448 NETWORK . . . . . III-93
III.1.5.48 TASK #457 NETWORK . . . . . III-94
III.1.5.49 TASK #464 NETWORK . . . . . III-95
III.1.5.50 TASK #480 NETWORK . . . . . III-96
III.1.5.51 TASK #488 NETWORK . . . . . III-97
III.1.5.52 TASK #495 NETWORK . . . . . III-98
III.1.5.53 TASK #502 NETWORK . . . . . III-99
III.1.5.54 TASK #518 NETWORK . . . . . III-101
III.1.5.55 TASK #524 NETWORK . . . . . III-102
III.1.5.56 TASK #534 NETWORK . . . . . III-103
III.1.5.57 TASK #539 NETWORK . . . . . III-103
III.1.5.58 TASK #543 NETWORK . . . . . III-104
III.1.5.59 TASK #545 NETWORK . . . . . III-105
III.1.5.60 TASK #556 NETWORK . . . . . III-106
III.1.5.61 TASK #560 NETWORK . . . . . III-106
III.1.5.62 TASK #565 NETWORK . . . . . III-107
III.1.5.63 TASK #568 NETWORK . . . . . III-107
III.1.5.64 TASK #571 NETWORK . . . . . III-108
III.1.5.65 TASK #576 NETWORK . . . . . III-108
III.1.5.66 TASK #579 NETWORK . . . . . III-109
III.1.5.67 TASK #585 NETWORK . . . . . III-110
III.1.5.68 TASK #588 NETWORK . . . . . III-110

III.1.5.69 TASK #590 NETWORK . . . . . III-111
III.1.5.70 TASK #594 NETWORK . . . . . III-111
III.1.5.71 TASK #596 NETWORK . . . . . III-112
III.1.5.72 TASK #601 NETWORK . . . . . III-113
III.1.5.73 TASK #609 NETWORK . . . . . III-114
III.1.5.74 TASK #616 NETWORK . . . . . III-115
III.1.5.75 TASK #622 NETWORK . . . . . III-116
III.1.5.76 TASK #625 NETWORK . . . . . III-116
III.1.5.77 TASK #643 NETWORK . . . . . III-118
III.1.5.78 TASK #653 NETWORK . . . . . III-119
III.1.5.79 TASK #664 NETWORK . . . . . III-120
III.1.5.80 TASK #668 NETWORK . . . . . III-121
III.1.5.81 TASK #675 NETWORK . . . . . III-122
III.1.5.82 TASK #684 NETWORK . . . . . III-123
III.1.5.83 TASK #686 NETWORK . . . . . III-123
III.1.5.84 TASK #688 NETWORK . . . . . III-124
III.1.5.85 SIMPLE TASKS - #700, #701, AND #705 . . . . . III-124
III.1.5.86 TASK #800 NETWORK . . . . . III-125
III.1.5.87 SIMPLE TASKS - 806, 809, 810, 811, 812 . . . . . III-126
III.1.5.88 AIRCRAFT BATTLE DAMAGE REPAIR . . . . . III-127
III.1.5.88.1 BATTLE DAMAGE TASK DATA . . . . . III-127
III.1.5.88.2 AIRBASE DAMAGED AIRCRAFT TASK DATA . . . . . III-127
III.1.5.89 MUNITIONS ASSEMBLY DATA . . . . . III-128
III.1.5.90 MUNITIONS LOADING DATA . . . . . III-128
III.1.6 PART REPAIR DATA (CARD TYPE #8) . . . . . III-129
III.1.6.1 LRU #1 . . . . . III-129
III.1.6.2 SIMPLE PART REPAIR TASKS #2 - #16 . . . . . III-129
III.1.6.3 LRU #17 . . . . . III-130
III.1.6.4 SIMPLE PART REPAIR TASKS #18 - #24 . . . . . III-130
III.1.6.5 LRU #25 . . . . . III-131
III.1.6.6 SIMPLE PART REPAIR TASKS #26 - #31 . . . . . III-131
III.1.6.7 LRU #32 . . . . . III-132
III.1.6.8 SIMPLE PART REPAIR TASKS #34 - #37 . . . . . III-132
III.1.6.9 LRU #38 . . . . . III-133
III.1.6.10 SIMPLE PART REPAIR TASKS #39 - #47 . . . . . III-133
III.1.6.11 LRU #48 . . . . . III-134
III.1.6.12 SIMPLE PART REPAIR TASK #49 . . . . . III-134
III.1.6.13 LRU #50 . . . . . III-135
III.1.6.14 SIMPLE PART REPAIR TASKS #51 - #62 . . . . . III-135
III.1.6.15 LRU #63 . . . . . III-136
III.1.6.16 SIMPLE PART REPAIR TASKS #64 - #84 . . . . . III-136
III.1.6.17 LRU #85 . . . . . III-137
III.1.6.18 SIMPLE PART REPAIR TASKS #86 - #90 . . . . . III-137
III.1.6.19 LRU #91 . . . . . III-138
III.1.6.20 LRU #92 . . . . . III-138
III.1.6.21 SIMPLE PART REPAIR TASKS #93 - #107 . . . . . III-139
III.1.6.22 LRU #108 . . . . . III-139
III.1.6.23 SIMPLE PART REPAIR TASKS #109 - #126 . . . . . III-140
III.1.6.24 LRU #127 . . . . . III-140
III.1.6.25 SIMPLE PART REPAIR TASKS #128 - #146 . . . . . III-141
III.1.6.26 LRU #149 . . . . . III-141
III.1.6.27 SIMPLE PART REPAIR TASKS #150 - #160 . . . . . III-142
III.1.6.28 LRU #161 . . . . . III-142
III.1.6.29 SIMPLE PART REPAIR TASKS #162 - #163 . . . . . III-143
III.1.6.30 LRU #164 . . . . . III-143
III.1.6.31 SIMPLE PART REPAIR TASKS #166 - #205 . . . . . III-144
III.1.6.32 LRU #206 . . . . . III-145
III.1.6.33 SIMPLE PART REPAIR TASKS #207, #208 . . . . . III-145
III.1.6.34 LRU #209 . . . . . III-146
III.1.6.35 LRU #210 . . . . . III-146
III.1.6.36 SIMPLE PART REPAIR TASKS #211 - #227 . . . . . III-147

CHAPTER III RESOURCE REQUIREMENTS (CONTINUED)


III 1.6.37 LRU #228 . . . . . III-147
III.1.6.38 SIMPLE PART REPAIR TASK #229 . . . . . III-148
III.1.6.39 LRU #230 . . . . . III-148
III.1.6.40 SIMPLE PART REPAIR TASK #231 . . . . . III-149
III.1.6.41 LRU #232 . . . . . III-149
III.1.6.42 SIMPLE PART REPAIR TASK #233 . . . . . III-150
III.1.6.43 LRU #234 . . . . . III-150
III.1.6.44 SIMPLE PART REPAIR TASKS #235 - #239 . . . . . III-151
III.1.6.45 LRU #240 . . . . . III-151
III.1.6.46 SIMPLE PART REPAIR TASKS #241 - 251 . . . . . III-152
III.1.7 TASK TIME MODIFIERS . . . . . III-153
III.1.7.1 HURRY FACTORS . . . . . III-153
III.1.7.2 REDUCE TIMES . . . . . III-153
III 1.7.3 SAVE TIMES . . . . . III-154
III.1.8 AIRCRAFT DATA . . . . . III-155
III 1.9 BASE DATA . . . . . III-155

CHAPTER IV INITIAL STOCKS AND STATUS OF AIRBASE RESOURCES

IV 1 AIRCRAFT . . . . . IV-1
IV 1.1 AIRCRAFT ASSIGNMENT BY BASE . . . . . IV-1
IV.1.2 AIRCRAFT INITIAL STATUS . . . . . IV-1
IV.1.3 AIRCRAFT INITIAL MAINTENANCE STATUS . . . . . IV-1
IV.2 PERSONNEL DATA . . . . . IV-2
IV.2.1 PERSONNEL LIST . . . . . IV-2
IV.2.2 EQUIVALENT PERSONNEL . . . . . IV-5
IV.2.3 CROSSED TRAINED PERSONNEL . . . . . IV-7
IV.2.4 TASK-ASSIST PERSONNEL . . . . . IV-8
IV.3 SUPPORT EQUIPMENT . . . . . IV-10
IV.3.1 AGE LIST . . . . . IV-10
IV 4 SPARE PARTS . . . . . IV-11
IV 4.1 LIST OF PARTS . . . . . IV-11
IV 4.2 LIST OF SALVAGEABLE PARTS . . . . . IV-16
IV.4.3 CANNIBALIZATION DATA . . . . . IV-21
IV.5 TRAP DATA . . . . . IV-26
IV.6 POL DATA . . . . . IV-26

CHAPTER V COMMUNICATION SYSTEM DATA

V.1 INTRA-THEATER SHIPMENT DATA . . . . . V-1
V.2 RESOURCE RESUPPLY DATA . . . . . V-1
V.3 NRTS PARTS SHIPMENT DATA . . . . . V-1

CHAPTER VI CROSS-REFERENCES

VI 1 TASK CROSS-REFERENCE . . . . . VI-2
VI 2 PERSONNEL CROSS-REFERENCE . . . . . VI-4
VI.3 AGE CROSS-REFERENCE . . . . . VI-9
VI.4 PART NUMBER CROSS-REFERENCE . . . . . VI-10

## LIST OF FIGURES


| FIGURE | TITLE | PAGE |
|---|---|---|
| 1 | SHOP TASK SEQUENCE | III-4 |
| 2 | TASK #1 NETWORK | III-50 |
| 3 | TASK #25 NETWORK | III-51 |
| 4 | TASK #32 NETWORK | III-52 |
| 5 | TASK #41 NETWORK | III-53 |
| 6 | TASK #54 NETWORK | III-54 |
| 7 | TASK #63 NETWORK | III-55 |
| 8 | TASK #73 NETWORK | III-56 |
| 9 | TASK #82 NETWORK | III-57 |
| 10 | TASK #92 NETWORK | III-58 |
| 11 | TASK #106 NETWORK | III-59 |
| 12 | TASK #109 NETWORK | III-59 |
| 13 | TASK #112 NETWORK | III-60 |
| 14 | TASK #125 NETWORK | III-61 |
| 15 | TASK #135 NETWORK | III-62 |
| 16 | TASK #144 NETWORK | III-63 |
| 17 | TASK #157 NETWORK | III-64 |
| 18 | TASK #165 NETWORK | III-64 |
| 19 | TASK #168 NETWORK | III-65 |
| 20 | TASK #171 NETWORK | III-66 |
| 21 | TASK #179 NETWORK | III-67 |
| 22 | TASK #192 NETWORK | III-68 |
| 23 | TASK #209 NETWORK | III-69 |
| 24 | TASK #217 NETWORK | III-70 |
| 25 | TASK #234 NETWORK | III-71 |
| 26 | TASK #241 NETWORK | III-72 |

| FIGURE | TITLE | PAGE |
|---|---|---|
| 27a | TASK #258 NETWORK | III-74 |
| 27b | TASK #258 NETWORK (CONTINUED) | III-75 |
| 28 | TASK #301 NETWORK | III-76 |
| 29 | TASK #312 NETWORK | III-77 |
| 30 | TASK #318 NETWORK | III-78 |
| 31 | TASK #334 NETWORK | III-79 |
| 32 | TASK #338 NETWORK | III-79 |
| 33 | TASK #340 NETWORK | III-80 |
| 34 | TASK #343 NETWORK | III-81 |
| 35 | TASK #350 NETWORK | III-82 |
| 36 | TASK #355 NETWORK | III-82 |
| 37 | TASK #356 NETWORK | III-83 |
| 38 | TASK #367 NETWORK | III-84 |
| 39 | TASK #373 NETWORK | III-85 |
| 40 | TASK #383 NETWORK | III-86 |
| 41 | TASK #395 NETWORK | III-87 |
| 42 | TASK #410 NETWORK | III-88 |
| 43 | TASK #418 NETWORK | III-88 |
| 44 | TASK #420 NETWORK | III-89 |
| 45 | TASK #429 NETWORK | III-90 |
| 46 | TASK #435 NETWORK | III-91 |
| 47 | TASK #441 NETWORK | III-92 |
| 48 | TASK #448 NETWORK | III-93 |
| 49 | TASK #457 NETWORK | III-94 |
| 50 | TASK #464 NETWORK | III-95 |
| 51 | TASK #480 NETWORK | III-96 |
| 52 | TASK #488 NETWORK | III-97 |
| 53 | TASK #495 NETWORK | III-98 |
| 54 | TASK #502 NETWORK | III-100 |
| 55 | TASK #518 NETWORK | III-101 |

| FIGURE | TITLE | PAGE |
|---|---|---|
| 56 | TASK #524 NETWORK | III-102 |
| 57 | TASK #534 NETWORK | III-103 |
| 58 | TASK #539 NETWORK | III-103 |
| 59 | TASK #543 NETWORK | III-104 |
| 60 | TASK #545 NETWORK | III-105 |
| 61 | TASK #556 NETWORK | III-106 |
| 62 | TASK #560 NETWORK | III-106 |
| 63 | TASK #565 NETWORK | III-107 |
| 64 | TASK #568 NETWORK | III-107 |
| 65 | TASK #571 NETWORK | III-108 |
| 66 | TASK #576 NETWORK | III-108 |
| 67 | TASK #579 NETWORK | III-109 |
| 68 | TASK #585 NETWORK | III-110 |
| 69 | TASK #588 NETWORK | III-110 |
| 70 | TASK #590 NETWORK | III-111 |
| 71 | TASK #594 NETWORK | III-111 |
| 72 | TASK #596 NETWORK | III-112 |
| 73 | TASK #601 NETWORK | III-113 |
| 74 | TASK #609 NETWORK | III-114 |
| 75 | TASK #616 NETWORK | III-115 |
| 76 | TASK #622 NETWORK | III-116 |
| 77 | TASK #625 NETWORK | III-117 |
| 78 | TASK #643 NETWORK | III-118 |
| 79 | TASK #653 NETWORK | III-119 |
| 80 | TASK #664 NETWORK | III-120 |
| 81 | TASK #668 NETWORK | III-121 |
| 82 | TASK #675 NETWORK | III-122 |
| 83 | TASK #684 NETWORK | III-123 |
| 84 | TASK #686 NETWORK | III-123 |
| 85 | TASK #688 NETWORK | III-124 |

| FIGURE | TITLE | PAGE |
|---|---|---|
| 86 | TASK #800 NETWORK | III-125 |
| 87 | LRU #1 NETWORK | III-129 |
| 88 | LRU #17 NETWORK | III-130 |
| 89 | LRU #25 NETWORK | III-131 |
| 90 | LRU #32 NETWORK | III-132 |
| 91 | LRU #38 NETWORK | III-133 |
| 92 | LRU #48 NETWORK | III-134 |
| 93 | LRU #50 NETWORK | III-135 |
| 94 | LRU #63 NETWORK | III-136 |
| 95 | LRU #85 NETWORK | III-137 |
| 96 | LRU #91 NETWORK | III-138 |
| 97 | LRU #97 NETWORK | III-138 |
| 98 | LRU #108 NETWORK | III-139 |
| 99 | LRU #127 NETWORK | III-140 |
| 100 | LRU #149 NETWORK | III-141 |
| 101 | LRU #161 NETWORK | III-142 |
| 102 | LRU #164 NETWORK | III-143 |
| 103 | LRU #206 NETWORK | III-145 |
| 104 | LRU #209 NETWORK | III-146 |
| 105 | LRU #210 NETWORK | III-146 |
| 106 | LRU #228 NETWORK | III-147 |
| 107 | LRU #230 NETWORK | III-148 |
| 108 | LRU #232 NETWORK | III-149 |
| 109 | LRU #234 NETWORK | III-150 |
| 110 | LRU #240 NETWORK | III-151 |

# CHAPTER I

# INTRODUCTION

## I.1 DATA BASE PURPOSE

THIS DATA BASE WAS DEVELOPED TO REPRESENT THE A-10 AIRCRAFT IN A WARTIME ENVIRONMENT.

## I.2 GENERAL DESCRIPTION OF THE DATA BASE

THIS DOCUMENTATION IS FOR THE TSAR A-10 INPUT DATA BASE WITH OFF-EQUIPMENT/INTERMEDIATE REPAIR. THIS DATA BASE REPRESENTS A 3 SQUADRON (72 AIRCRAFT) MOB AND A CDE. ON-EQUIPMENT TASKS AND TASK PROBABILITIES WERE ORIGINALLY BASED ON THE LATEST LCOM DATA AND ADJUSTED TO REFLECT A COMBAT ENVIRONMENT. THIS DATA BASE ALSO INCLUDES 5, 10, 30, 50, 100, AND 200 HOUR PHASED MAINTENANCE REQUIREMENTS. SPARE PARTS ARE EXPLICITLY ENTERED IN THE DATA BASE. ABDR TASKS ARE REPRESENTED. THIS DATA BASE WAS DEVELOPED WITH THE LASTEST VERSION OF TSAR (23 OCT 1985) DIMENSIONED FOR 200 PERSONNEL TYPES, 100 EQUIPMENTS TYPES, 50 TYPES OF MUNITIONS, TRAP AND CE BUILDING MATERIALS, AND FOR 1000 TYPES OF AIRCRAFT PARTS. CHEMICAL ATTACK OR ENVIRMENT DATA IS NOT EXPLICITLY EXPRESSED IN THIS DATA BASE.

## CHAPTER II

## TSAR CONTROL VARIABLES

### II.1 CARD TYPE #1

BASIC CONTROL VARIABLES

| VARIABLE | VALUE | EXPLANATION |
|---|---|---|
| SIMLTH | 30 | 30 DAYS WERE USED AS THE SIMULATION LENGTH FOR DATA BASE TESTING |
| NTRIAL | 25 | 25 TRIALS USED IN DATA BASE TESTING |
| EXTEND | 0 | SINGLE HISTORY OPTION OF SIMULATION WAS NOT USED |
| SEED | 1 | USED REPRODUCIBLE SEED FOR THE RANDOM NUMBER GENERATOR |
| NBASE | 2 | 1 A-10 MOB, AND 1 A-10 COB |
| NTYPE | 1 | 1 AIRCRAFT TYPE (A-10) |
| CREWS | 1 | AIR CREWS ARE SIMULATED |
| BUILD | 1 | MUNITIONS ASSEMBLY FEATURES ARE ACTIVATED |
| TSAR | 0 | NO THEATER RESOURCE MANAGEMENT |
| CMODE | 0 | NO THEATER RESOURCE MANAGEMENT |
| CONSIG | 0 | ANY PARTS SHIPPED TO THE THEATER TO REPLACE CONDEMNED PARTS AND LRU'S THAT WERE NRTSED TO CONUS ARE CONSIGNED TO THE BASE OF ORIGIN ON RETURN |
| DOSHEL | 1 | AIRCRAFT ARE REMOVED FROM SHELTERS WHEN THEY ARE LAUNCHED, AND REASSIGNED AN AIRCRAFT SHELTER OR PARKING RAMP, UPON RETURN |
| DOATC | 0 | AIR TRAFFIC CONTROL ACTIVITIES ARE NOT SIMULATED |
| TASKRWY | 0 | IF TWO OR MORE MOS LOCATIONS HAVE THE SAME NUMBER OF CRATERS TO BE REPAIRED, THE MOS LOCATION THAT HAS THE FEWEST MANHOURS REQUIRED TO CLEAR MINES AND UXO IS SELECTED |

## II.2 CARD TYPE #2/1

OUTPUT CONTROL VARIABLES

| VARIABLE | VALUE | EXPLANATION |
|---|---|---|
| TEST | 0 | DEBUG FEATURES ARE NOT ACTIVATED |
| VERIFY | 0 | DATA BASE HAS ALREADY BEEN TESTED USING THE VERIFY FEATURE |
| PRINT | 4 | TSAR SUMULATION OUTPUT LEVEL |
| SCROLL | 0 | AIRCRAFT ACTIVITY REPORTS ARE NOT PRODUCED |
| OVERFLOW | 2 | WHEN THE DIMENSIONS OF DATA ARRAYS ARE EXCEEDED, THE OVERFLOW IS NOTED FOR THE FIRST ENTRY AND TALLIED |
| STATFQ | 30 | EVERY 30 DAYS THE SUMMARY DATA REGARDING THE AVERAGE LENGTH OF TIME FOR TASKS AND JOBS, AND THE LENGTHS OF THE AIRCRAFT DELAYS ARE PRINTED |
| CUMSTA | 0 | SUMMARY DATA (STATFQ) ARE CUMULATED SEPARATELY FOR EACH TRIAL |
| NONUNI | 1 | LOSSES ARE DETERMINED BY A SAMPLE FROM THE BINOMIAL DISTRIBUTION |
| MLIST | 0 | THE TIMES REQUIRED TO PREPARE AIRCRAFT FOR FLIGHT ARE CUMULATED FOR 0 TO 2, 4, 6, AND 8 HOURS |
| XTEST | 0 | SPECIAL DEBUG FEATURES ARE NOT ACTIVATED |
| CEWORK | 1 | CIVIL ENGINEERING RESOURCES ARE ALLOCATED TO REPAIR DAMAGE FROM AIRBASE ATTACKS |
| ATRISK | 0 | WHEN A SHOP, OR ALL ELEMENTS OF A DISTRIBUTED SHOP ARE DAMAGED AT THE TIME OF A SUBSEQUENT ATTACK, THE RESOURCES ASSIGNED TO THAT SHOP ARE ASSUMED TO HAVE BEEN RELOCATED AND TO BE INVULNERABLE |
| CEPEO | 10 | THERE ARE TEN TYPES OF CIVIL ENGINEERING PERSONEL |
| CEAGE | 10 | THERE ARE TEN TYPES OF CIVIL ENGINEERING EQUIPMENT |
| ONLYUE | 0 | TSARINA GENERATED EQUIPMENT LOSS RATES ARE APPLIED TO ALL EQUIPMENT |

## II.3 CARD TYPE #2/2

REPETITIVE RANDOM NUMBER STREAMS

| VARIABLE | VALUE | EXPLANATION |
|---|---|---|
| ****REPETITIVE RANDOM NUMBER STREAMS**** | | |
| SORTIE DEMAND | -1 | RANDOM NUMBER STREAM FOR THIS EVENT IS NOT REPEATED TRIAL TO TRIAL |
| INTRA-THEATER TRANSPORT | 0 | RANDOM NUMBER STREAM FOR THIS EVENT REPEATED TRIAL TO TRIAL |
| RESOURCE STATUS REPORTS | 0 | RANDOM NUMBER STREAM FOR THIS EVENT REPEATED TRIAL TO TRIAL |
| ZERO-TIME SHOP ACTIVITY | 0 | RANDOM NUMBER STREAM FOR THIS EVENT REPEATED TRIAL TO TRIAL |
| TASK UNCERTAINTY | 0 | RANDOM NUMBER STREAM FOR THIS EVENT REPEATED TRIAL TO TRIAL |
| ****AUXILIARY CONTROL VARIABLES**** | | |
| ADAPTR | 0 | NO CHANGE IN NRTS POLICY FOR RR PARTS |
| SEEKSH | 0 | ANOTHER IN-THEATER SHOP IS NOT SOUGHT FOR PARTS REPAIR, WHEN THE NOMINAL SHOP IS CLOSED BY DAMAGE |
| SHPREP | 0 | NO USE OF "SEND" LOGIC IN THEATER |
| NRTPOL | 0 | AN LRU THAT REQUIRES AN SRU THAT IS UNAVAILABLE AND IS NOT NORMALLY STOCKED, IS NOT NRTSED |
| TODOCK | 0 | PARTS THAT ARE NORMALLY NRTSED TO ANOTHER BASE BUT CAN'T BE BECAUSE NO SHIPMENT SCHEDULE EXISTS, ARE SENT TO CONUS |

## II.4 CARD TYPE #2/3

SEED DATA

| VARIABLE | VALUE | EXPLANATION |
|---|---|---|
| *** NOT USED *** | | |

## II.5 CARD TYPE #2/4

CONTROL FOR SPECIAL DEFERRED AIRCRAFT TASK STATUS REPORTS

| VARIABLE | VALUE | EXPLANATION |
|---|---|---|
| *** NOT USED *** | | |

## II.6 CARD TYPE #2/5

OUTPUT CONTROL VARIABLES

| VARIABLE | VALUE | EXPLANATION |
|---|---|---|
| *** NOT USED *** | | |

## II.7 CARD TYPE #3/1

OPERATIONS CONTROL VARIABLES

| VARIABLE | VALUE | EXPLANATION |
|---|---|---|
| OPSBSE | 2 | ONE A-10 MOB, AND ONE A-10 COB |
| POSTPN | 1 | TASKS WILL BE DEFFERRED THAT ARE NOT CRITICAL FOR THE NEXT MISSION |
| IGNORE | 0 | DEFERRED TASKS ARE NOT IGNORED |
| DOPHAS | 1 | PHASED MAINTENANCE FEATURES ARE ACTIVATED |
| LTHDEF | 0 | UNSCHEDULED MAINTENANCE WHOSE CRITICALITY IS GREATER THAN 66 MAY NOT BE DEFERRED |
| CANMOD | 2 | CANNIBALIZATION IS PERMITTED WITH ON-BASE REPARABLES. ELIGIBLE AIRCRAFT ARE THOSE WHOSE DESIGNATED MISSION IS NOT AFFECTED BY A PART. |
| MXHOLE | 10 | A MAXIMUM OF 10 "HOLES" MAY BE CREATED ON A SINGLE AIRCRAFT BY CANNIBALIZATION |
| DOCANN | 0 | NO CANNABILIZATION BY PART DEMAND |
| CANMUL | 150 | CANNIBALIZATION TIME IS 150 PERCENT OF THE NOMINAL TIME FOR THE TASK SEGMENT THAT SPECIFIES THE PART |
| CANSRU | 4 | THE SRU'S ARE STRIPPED FROM ONE OF TWO OR MORE LRU'S THAT ARE WAITING FOR REPAIR, WHEN AIRCRAFT ARE NORS BECAUSE OF THAT LRU |
| CRASH | 0 | WHEN RUNWAYS ARE CLOSED AT ALL OPERATING BASES (AND AT ANY EMERGENCY BASE) THE SORTIE LENGTH IS ARTIFICIALLY EXTENDED SUCH THAT THE AIRCRAFT LAND AFTER THE RUNWAY AT THE PLANNED RECOVERY BASE HAS BEEN OPENED (SKY HOOK) |
| ORDIT | 1 | INTERRUPTED TASKS AND REPAIRS ARE HANDLED ON A PRIORITY BASIS, NOT FIFO |
| ORDWT | 1 | WAITING TASK AND REPAIRS ARE PRIORITIZED, NOT FIFO |
| ORDER1 | 0 | NO THEATER RESOURCE MANAGEMENT |
| ORDER2 | 0 | NO THEATER RESOURCE MANAGEMENT |
| INDEX | 0 | A CIRF IS NOT MODELED IN THIS DATA BASE |

## II.8 CARD TYPE #3/2

AIRCRAFT MANAGEMENT VARIABLES

| VARIABLES | VALUES | EXPLANATION |
|---|---|---|
| JOBCON | O | REAR MAINTENANCE-BASE LOGIC IS NOT ACTIVATED |
| FILLAC | O | THERE IS NO AIRCRAFT FILLER POOL |
| FLEVEL | O | NO REAR BASE AND NO FILLER POOL FLEVEL NOT APPLICABLE |
| MNTLMT | O | REAR MAINTENANCE-BASE LOGIC IS NOT ACTIVATED |
| MNTF | O | |
| MNTR | O | REAR MAINTENANCE-BASE LOGIC IS NOT ACTIVATED |
| QUIK | O | NO FILLER POOL, QUIK NOT APPLICABLE |
| RPARTS | O | AUTOMATIC PARTS GENERATION FEATURE NOT ACTIVATED, RPARTS NOT APPLICABLE |
| MAXMNT | O | NO FILLER POOL, MAXMNT NOT APPLICABLE |
| EMERG | O | NO EMERGENCY RECOVERY BASES |
| NOFUEL | O | OTHER TASKS ARE NOT PROHIBITED WHEN REFUELING IS BEING CONDUCTED |
| UNCER | O | ACTUAL UNSCHEDULED MAINTENANCE TASK PROBABILITIES ARE THE VALUES ON CARD TYPE #7 |
| VBREAK | O | UNSCHEDULED MAINTENANCE TASKS PROBABILITIES ARE MODIFIED IN PROPORTION TO THE CARD TYPE #18/2 ENTRIES |
| OLDATA | O | BASE REPORTS ARE GENERATED |
| NEWDATA | O | THEATER RESOURCE REPORTS ARE TO BE INITIATED AT 0000 |

## II.9 CARD TYPE #3/3

AIRCRAFT PARTS GENERATION

| VARIABLE | VALUE | EXPLANATION |
|---|---|---|
| OUTFIT | 0 | THE AUTOMATIC PARTS STOCK INITIALIZATION IS NOT ACTIVATED. PART STOCK LEVELS ARE EXPLICITLY INPUT. |
| PMODE | 0 | WRSK'S PARTS STOCK LEVELS ARE NOT COMPUTED |
| PPRINT | 0 | SIMULATION OUTPUT LEVEL FOR PARTS DATA |
| RANDM | 0 | THE POISSON APPROXIMATION OF BINOMIAL DISTRIBUTION IS NOT USED FOR PARTS SHORTAGES AND THE LOCATION OF PARTS IN THE PIPELINE |
| FULL | 0 | NOT ALL PARTS ARE ON BASE. SOME MAY BE ENROUTE AT TIME 0 |
| SHORT | 0 | NO AUTOMATIC PARTS GENERATION. SHORT NOT APPLICABLE |
| HIATUS | 0 | NO PARTS PIPELINE DELAY |
| TOOFEW | 0 | NO AUTOMATIC PARTS GENERATION. TOOFEW NOT APPLICABLE |
| K1LOW | 0 | NO PARTS SHORTAGES |
| K2LOW | 0 | NO PARTS SHORTAGES |
| ZNORS | 0 | PARTS SHORTAGE NOTICE IS PRINTED |
| NEWPRT | 0 | NO AUTOMATIC PARTS GENERATION. NEWPRT NOT APPLICABLE |
| NPART | 251 | THE NUMBER OF THE HIGHEST NUMBERED LRU IS 251 |
| CHNRTS | 0 | THE NRTS VALUE IN THE POLICY ARRAY WILL BE USED |
| FSALVG | 25 | IF AN AIRCRAFT IS DAMAGED BY AIR ATTACK AND IS NOT REPARABLE, 25 PERCENT OF THAT AIRCRAFT'S SPARE PARTS NOT DESTROYED BY THE ATTACK ARE SALVAGED |

## II.10 CARD TYPE #3/4

CHEMICAL WARFARE VARIABLES

| VARIABLE | VALUE | EXPLANATION |
|---|---|---|
| *** NOT USED *** | | |

## II.11 CARD TYPE #3/5

CHEMICAL WARFARE VARIABLES

| VARIABLE | VALUE | EXPLANATION |
|---|---|---|
| *** NOT USED *** | | |

## II.12 CARD TYPE #4/1

MISCELLANEOUS TIME FACTORS

| VARIABLE | VALUE | EXPLANATION |
|---|---|---|
| RELIEV | 0 | AIRCREWS REMAIN ON DUTY THE FULL TIME WHETHER OR NOT THEY ARE NEEDED |
| SLEEP | 12 | AIRCREWS GET 12 HOURS OF SLEEP BETWEEN SHIFTS |
| REST | 60 | AIRCREWS GET 60 MINUTES OF REST BETWEEN FLIGHTS |
| ENDAY | 20 | FLYING DAY ENDS AT 2000 |
| EXPED | 4 | PARTS REPAIR ADMIN DELAY ARE REDUCED ONE QUARTER (1/EXPED) OF THE NOMINAL TIME, IF THERE ARE NO SERVICEABLES |
| LOADTM | 215 | NOMINAL TIME TO COMMENCE PREFLIGHT IS 0215 |
| LSTTOD | 445 | LAST TIME FOR COMMENCING MORNING PRE-FLIGHT PREPARATION IS 0445 |
| OVERTM | 60 | NO MORE THAN 60 MINUTES OF OVERTIME IS PERMITTED |
| DOWNTM | 4 | PARTS MAY NOT BE CANNIBALIZED FROM AN AIRCRAFT WITH A READY-TO-FLY TIME WITHIN 4 HOURS |
| CDELAY | 0 | NO ADDED DELAY TO THE DEFAULT CANNI-BALIZATION TIME |
| PKGTM | 480 | 480 MINUTES PACKAGE TIME FOR INTRATHEATER SHIPMENT |
| CEDLAY | 0 | INITIATION OF ALL RECONSTRUCTION TASKS IS NOT DELAYED FOLLOWING AN AIR BASE ATTACK |
| SHPDLY | 90 | A 90 MINUTE DELAY IS INTRODUCED TO ALL ON- AND OFF-EQUIPMENT TASK TO ACCOUNT FOR THE DISRUPTION FOLLOWING AN AIR-BASE ATTACK |
| PROTME | -1 | WHEN INSUFFICIENT AIRCRAFT ARE READY FOR A SCHEDULED FLILGHT, AND NONE CAN BE FOUND IN THE SPARE QUEUE OR A LOW-ER PRIORITY ALERT, AN AIRCRAFT CAN BE TAKEN FROM ANOTHER SCHEDULED FLIGHT OF THE SAME OR LOWER PRIORITY |
| C4TM | 1600 | THE TIME FOR INITIAL THEATER RESOURCE REVIEW IS 1600 |
| C4INT | 500 | THE TIME INTERVAL BETWEEN PERIODIC THEATER RESOURCE REVIEWS IS 500 HOURS SUBSEQUENT TO THE INITIAL REVIEW |

II 13 CARD TYPE #4/2

MISCELLANEOUS TIME FACTORS

| VARIABLE | VALUE | EXPLANATION |
|---|---|---|
| STATE | 0 | THE STATE OF EACH BASE'S CAPABILITY TO GENERATE SORTIES IS NOT COMPUTED DAILY |
| SELECT | 0 | ALL SORTIES DEMANDED BY BASE, SELECT NOT APPLICABLE |
| MULTI1 | 0 | ONLY ONE MOB, MULTI1 NOT APPLICABLE |
| MULTI2 | 0 | ONLY ONE MOB, MULTI2 NOT APPLICABLE |
| GRACE | 0 | NO GRACE PERIOD FOR CODE2 AND CODE3 |
| DONTCK | 0 | THE IDENTIFICATION NUMBERS ON THE TSARINA GENERATED TYPE #40 CARDS, AND THE TSARINA "HIT DATA" ARE COMPARED AND EXECUTION IS TERMINATED IF THEY DO NOT AGREE |
| NOSAVE | 0 | RECORDS ARE SAVED FOR PARTS THAT BREAK AFTER AN AIR ATTACK HAS CLOSED THE SHOP THAT WOULD NORMALLY PROCESS THE REPAIRS |
| NOCANN | 0 | PARTS THAT HAVE A PROBABLITY OF BEING BROKEN WHEN CANNIBALIZED GREATER THAN 0 PERCENT (NOCANN) ILL NOT BE CANNI-BALIZED |
| NOPOMO | 0 | THERE IS NO ADDITIONAL TASK TIME THAT IS REQUIRED AT A BASE OPERATING UNDER 66-1, WHEN THE DATA APPLIES TO 66-5 ACTIVITIES |
| FATAL CASUALTIES | 0 | NO CASUALTIES WITH CONVENTIONAL WEAP-ONS WILL BE FATALITIES |
| AIDA | 0 | CONTROLS THE INTERPRETATION OF BASE DAMAGE DATA |
| HR-TH | 16 12 | BETWEEN 0000 AND 1600 LOOK AHEAD 12 HOURS |
| HR-TH | 20 20 | BETWEEN 1600 AND 2000 LOOK AHEAD 20 HOURS |
| HR-TH | 24 16 | BETWEEN 2000 AND 2400 LOOK AHEAD 16 HOURS |

## II.14 CARD TYPE #4/3

SPARE VARIABLES

| VARIABLE | VALUE | EXPLANATION |
|---|---|---|
| *** NOT USED *** | | |

## II.15 CARD TYPE #4/4

SPECIAL OTI INPUTS

| VARIABLE | VALUE | EXPLANATION |
|---|---|---|
| NDAYS | 30 | NUMBER OF DAYS FOR EACH ITERATION |
| ICASE | 40 | CUMULATIVE SORTIE DIRECT ACCESS DATA BASE CASE #40 |

# CHAPTER III

# RESOURCE REQUIREMENTS

## III 1 AIRCRAFT, PART AND SUPPORT EQUIPMENT REPAIR DATA

### III 1 1 SHOP DESCRIPTION LIST

| TSAR SHOP | DESCRIPTION |
|---|---|
| 1 | FLIGHTLINE |
| 2 | AIRFRAME REPAIR |
| 3 | ELECTRICAL SYSTEMS |
| 4 | ENVIRONMENTAL SYSTEMS |
| 5 | EGRESS SYSTEMS |
| 6 | PNEUDRAULICS |
| 7 | ENGINE SHOP |
| 8 | AUTOPILOT SYSTEMS |
| 9 | AVIONICS/INSTRUMENTATION |
| 10 | SENSORS |
| 11 | WHEEL/TIRE |
| 12 | RADIO COMMUNICATIONS |
| 13 | RADAR NAVIGATION |
| 14 | ECM SYSTEMS |
| 15 | INERTIAL NAVIGATION |
| 16 | FIRE CONTROL |
| 17 | WEAPON CONTROL |
| 18 | MACHINE SHOP |
| 19 | WELDING SHOP |

SHOP DESCRIPTION (CONTINUED)

| TSAR SHOP | DESCRIPTION |
|---|---|
| 20 | CAMERA SHOP |
| 21 | HEAVY REPAIR |
| 22 | AGE REPAIR |
| 23 | FUEL SYSTEMS |
| 24 | N.D.I /CORROSION CNTL/PARACHUTE SHOP |
| 25 | FLIGHTLINE |
| 28 | MUNITIONS LOADING |
| 30 | MUNITIONS ASSEMBLY/CIVIL ENGINEERING |

III.1.2 DISTRIBUTED SHOP DESCRIPTIONS (CARD TYPE #37)

*** NO SHOPS WERE DISTRIBUTED ***

III.1.3 SHOP/TASK SEQUENCE DATA (CARD TYPE #29)

THE FOLLOWING PLOT GRAPHICALLY REPRESENTS THE SHOP/TASK SEQUENCE OF THE A-10 DATA BASE

RESOURCE REQUIREMENTS
AIRCRAFT, PART AND SUPPORT EQUIPMENT REPAIR DATA

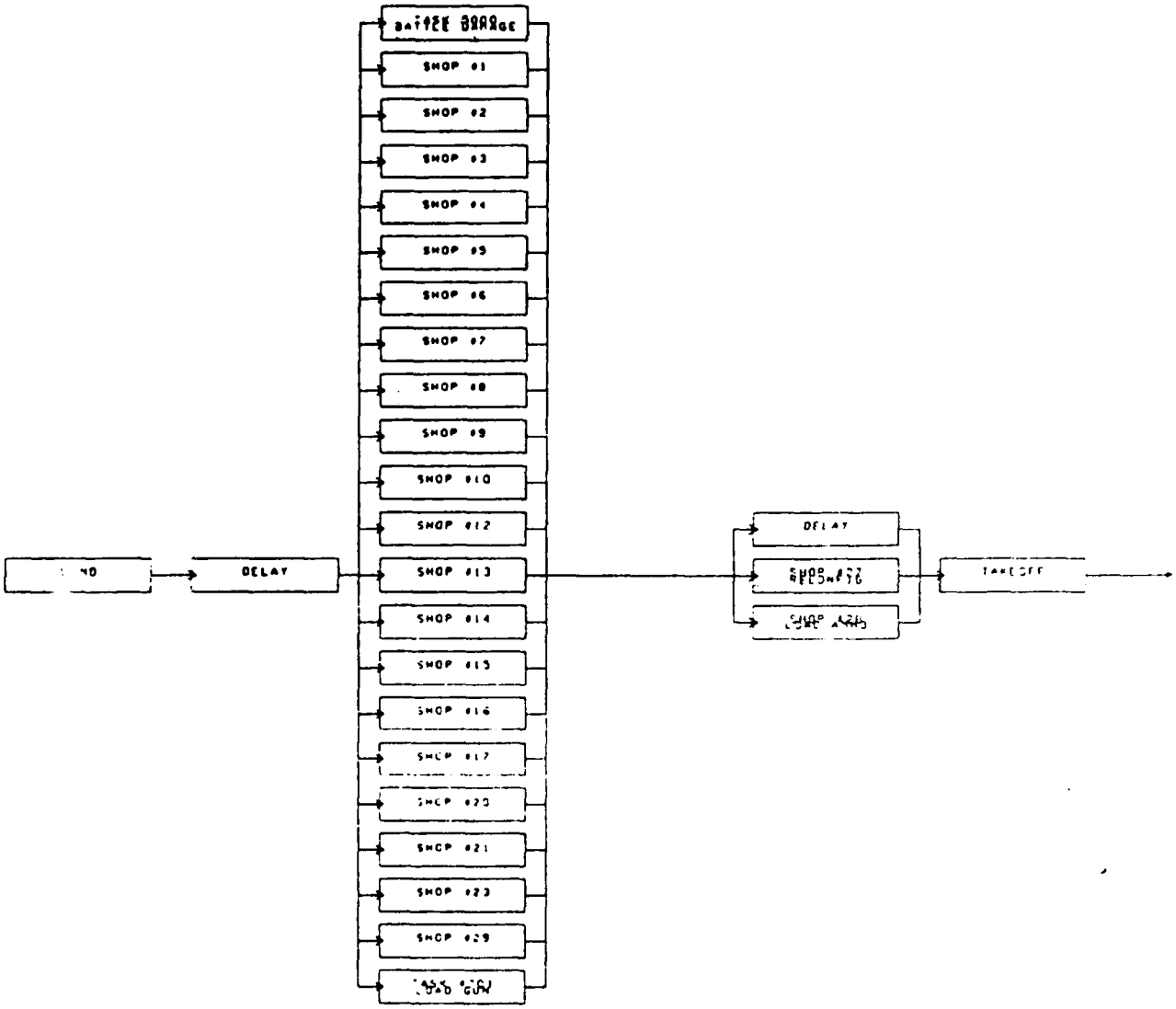


FIGURE 1

## III.1.4 SHOP DATA

### III.1.4.1 TSAR SHOP #1 -- FLIGHTLINE -

BEGINNING OF DAY SHIFT IS 0600. (CARD TYPE #18/1)
BREAK RATE MODIFIER = 75%. (CARD TYPE #18/2)

SHOP RESOURCE DATA (CARD TYPES #21 AND #22)

PERSONNEL DATA (MOB)

| PERSONNEL TYPE | DAY SHIFT | NIGHT SHIFT | TOTAL | TARGETED | AFSC | DESCRIPTION |
|---|---|---|---|---|---|---|
| 1 | 28 | 20 | 48 | 48 | 431X1C | SQUAD #1 |
| 31 | 28 | 20 | 48 | 48 | 431X1C | SQUAD #2 |
| 51 | 28 | 20 | 48 | 48 | 431X1C | SQUAD #3 |
| 3 TYPES | 84 | 60 | 144 | 144 | TOTALS | |

PERSONNEL DATA (COB)

| PERSONNEL TYPE | DAY SHIFT | NIGHT SHIFT | TOTAL | TARGETED | AFSC | DESCRIPTION |
|---|---|---|---|---|---|---|
| 1 | 12 | 6 | 18 | 18 | 431X1C | SQUAD #1 |
| 1 TYPE | 12 | 6 | 18 | 18 | TOTALS | |

AGE DATA (MOB)

| TSAR AGE TYPE | NUMBER | TARGETED | DESCRIPTION |
|---|---|---|---|
| 1 | 3 | 3 | FUEL HYDRANT |
| 80 | 13 | 13 | FUEL TRUCK |
| 2 TYPES | 16 | 16 | TOTALS |

AGE DATA (COB)

| TSAR AGE TYPE | NUMBER | TARGETED | DESCRIPTION |
|---|---|---|---|
| 1 | 2 | 2 | FUEL HYDRANT |
| 80 | 8 | 8 | FUEL TRUCK |
| 2 TYPES | 10 | 10 | TOTALS |

RESOURCE REQUIREMENTS
AIRCRAFT, PART AND SUPPORT EQUIPMENT REPAIR DATA

SHOP TASK DATA (CARD TYPES #5, #7, #8, AND #10)

EQUIPMENT REPAIR TASKS

| TSAR AGE | PROB | AGE DESCRIPTION | TASK DESCRIPTION |
|---|---|---|---|
| 1 | .0010 | FUEL HYDRANT | REPAIR HYDRANT |
| 80 | .0010 | FUEL TRUCK | REPAIR TRUCK |

TOTAL NUMBER OF EQUIPMENT REPAIR TASKS = 2

ON-EQUIPMENT TASKS

| TSAR TASK #(NETWORK) | TASK PROB | TASK DESCRIPTION |
|---|---|---|
| 82 | .0029 | LADDER CREW BOARDING |
| 109 | .0500 | LANDING GEAR |
| 125 | .0036 | NOSE LANDING GEAR |

TOTAL NUMBER OF ON-EQUIPMENT TASK = 3
CUMULATIVE ON-EQUIPMENT PROBABILITY = 0.0565

PART REPAIR TASKS (CARD TYPE #8/1)

| PART NO | WUC CODE | PART DESCRIPTION | TASK DESCRIPTION |
|---|---|---|---|
| 1 | 11AFO | WINDSHIELD ASSEMBLY | RR WINDSHIELD |
| 31 | 12BAO | LADDER, CREW BOARDING | REPAIR LADDER |
| 34 | 13BHA | TIRE, NOSE LANDING GEAR | REPLACE TIRE |
| 37 | 13BDO | ACTUATOR, NOSE LANDING GEAR RET | REPAIR ACTUATOR |
| 150 | 13AHAL | TIRE, MAIN LANDING GEAR,L.H. | REPLACE TIRE |
| 151 | 13AHAR | TIRE, MAIN LANDING GEAR,R.H. | REPLACE TIRE |

TOTAL NUMBER OF PART REPAIR TASK = 6

III.1.4.2 TSAR SHOP #2 -- AIRFRAME REPAIR -

BEGINNING OF DAY SHIFT IS 0800 (CARD TYPE #18/1)
BREAK RATE MODIFIER = 75% (CARD TYPE #18/2)

SHOP RESOURCE DATA (CARD TYPES #21 AND #22)

PERSONNEL DATA (MOB)

| PERSONNEL TYPE | DAY SHIFT | NIGHT SHIFT | TOTAL | TARGETED | AFSC | DESCRIPTION |
|---|---|---|---|---|---|---|
| 2 | 9 | 5 | 14 | 14 | 427X5 | SQUAD #1 |
| 32 | 9 | 5 | 14 | 14 | 427X5 | SQUAD #2 |
| 41 | 9 | 6 | 15 | 15 | | ABDR ASSESSOR |
| 52 | 9 | 5 | 14 | 14 | 427X5 | SQUAD #3 |
| 82 | 2 | 2 | 4 | 4 | 427X5 | WING |
| 5 TYPES | 38 | 23 | 61 | 61 | TOTALS | |

PERSONNEL DATA (COB)

| PERSONNEL TYPE | DAY SHIFT | NIGHT SHIFT | TOTAL | TARGETED | AFSC | DESCRIPTION |
|---|---|---|---|---|---|---|
| 2 | 2 | 4 | 6 | 6 | 427X5 | SQUAD #1 |
| 41 | 6 | 6 | 12 | 12 | | ABDR ASSESSOR |
| 82 | 2 | 2 | 4 | 4 | 427X5 | WING |
| 3 TYPES | 10 | 12 | 22 | 22 | TOTALS | |

SHOP TASK DATA (CARD TYPES #5, #7, #8, AND #10)

ON-EQUIPMENT TASKS

| TSAR TASK #(NETWORK) | TASK PROB | TASK DESCRIPTION |
|---|---|---|
| 25 | .0084 | FUSELAGE, CENTER SECTION |
| 32 | .0089 | FUSELAGE, AFT SECTION |
| 41 | .0175 | WING ASSEMBLY |
| 54 | .0043 | EMPENNAGE |
| 63 | .0067 | ENGINE NACELLE, L.H./R.H |
| 73 | .0035 | COCKPIT |

TOTAL NUMBER OF ON-EQUIPMENT TASK = 6
CUMULATIVE ON-EQUIPMENT PROBABILITY = 0.0493

PART REPAIR TASKS (CARD TYPE #6/1)

| PART NO | WUC CODE | PART DESCRIPTION | TASK DESCRIPTION |
|---|---|---|---|
| 12 | 11BOO | FUSELAGE, CENTER SECTION | REPAIR FUSELAGE |
| 13 | 11BNA | F46, ELECTRICAL TROUGH ACCESS | REPAIR ACCESS |
| 14 | 11COO | FUSELAGE, AFT SECTION | REPAIR FUSELAGE |
| 15 | 11CEN | F45, ECS AND FUEL ACCESS | REPAIR ACCESS |
| 16 | 11CEP | F47, AUX POWER UNIT ACCESS | REPAIR ACCESS |
| 17 | 11DOO | WING ASSEMBLY | RR ASSEMBLY |
| 18 | 11DGK | W21, LOWER PANEL ACCESS, RIGHT | REPAIR ACCESS |
| 19 | 11DHK | W22, LOWER PANEL ACCESS, LEFT | REPAIR ACCESS |
| 20 | 11DOB | W24, ACCESS PANEL OUTBOARD | REPAIR ACCESS |
| 21 | 11EOO | EMPENNAGE | REPAIR EMPENNAGE |
| 22 | 11EEB | E3, COMPASS FLUX GATE ACCESS | REPAIR ACCESS |
| 23 | 11EEF | E11, RUDDER TOP HINGE ACCESS,L.H | REPAIR ACCESS |
| 24 | 11EFF | E12, RUDDER TOP HINGE ACCESS,R.H | REPAIR ACCESS |
| 25 | 11FOO | ENGINE NACELLE, L.H./R.H | RR NACELLE |
| 26 | 11FCC | N5, ENGINE LINES OAD ACCESS | REPAIR ACCESS |
| 27 | 12AOO | COCKPIT | REPAIR COCKPIT |
| 28 | 12AAB | BOTTLE ASSEMBLY, INSULATED VACCUM | REPAIR ASSEMBLY |
| 29 | 12AAK | GLARESHIELD, MAIN INSTR PANEL | REPAIR SHIELD |
| 30 | 12AAL | ANTI-REFLECTION SHIELD | REPAIR SHIELD |

TOTAL NUMBER OF PART REPAIR TASK = 19

III.1.4.3 TSAR SHOP #3 -- ELECTRICAL SHOP -

BEGINNING OF DAY SHIFT IS 0800. (CARD TYPE #18/1)
BREAK RATE MODIFIER = 75%. (CARD TYPE #18/2)

SHOP RESOURCE DATA (CARD TYPES #21 AND #22)

PERSONNEL DATA (MOB)

| PERSONNEL TYPE | DAY SHIFT | NIGHT SHIFT | TOTAL | TARGETED | AFSC | DESCRIPTION |
|---|---|---|---|---|---|---|
| 3 | 5 | 2 | 7 | 7 | 423X0 | SQUAD #1 |
| 33 | 5 | 2 | 7 | 7 | 423X0 | SQUAD #2 |
| 53 | 5 | 2 | 7 | 7 | 423X0 | SQUAD #3 |
| 83 | 2 | 2 | 4 | 4 | 423X0 | WING |
| 4 TYPES | 17 | 8 | 25 | 25 | TOTALS | |

PERSONNEL DATA (COB)

| PERSONNEL TYPE | DAY SHIFT | NIGHT SHIFT | TOTAL | TARGETED | AFSC | DESCRIPTION |
|---|---|---|---|---|---|---|
| 3 | 2 | 2 | 4 | 4 | 423X0 | SQUAD #1 |
| 83 | 2 | 2 | 4 | 4 | 423X0 | WING |
| 2 TYPES | 4 | 4 | 8 | 8 | TOTALS | |

SHOP TASK DATA (CARD TYPES #5, #7, #8, AND #10)

ON-EQUIPMENT TASKS

| TSAR TASK #(NETWORK) | TASK PROB | TASK DESCRIPTION |
|---|---|---|
| 135 | .0020 | NOSE WHEEL STEERING SYSTEM |
| 144 | .0060 | WHEEL BRAKES |
| 157 | .0018 | LANDING GEAR CONTROL SYSTEM |
| 165 | .0008 | LANDING GEAR INDICATING SYS |
| 171 | .0013 | PILOT CONTROLS |
| 338 | .0007 | ANTI-ICE SYSTEM |
| 350 | .0008 | EMERGENCY AC POWER SYSTEM |
| 355 | .0028 | EMERGENCY DC POWER SYSTEM |
| 358 | .0026 | AC/DC DISTRIBUTION SYSTEM |
| 367 | .0007 | LIGHTING CONTROLS |
| 373 | .0063 | EXTERIOR LIGHTING SYSTEM |
| 383 | .0061 | INTERIOR LIGHTING SYSTEM |
| 480 | .0023 | FIRE DETECTION SYSTEM |
| 488 | .0006 | FIRE EXTINGUISHING SYSTEM |

TOTAL NUMBER OF ON-EQUIPMENT TASK = 14
CUMULATIVE ON-EQUIPMENT PROBABILITY = 0.0348

PART REPAIR TASKS (CARD TYPE #8/1)

| PART NO | WUC CODE | PART DESCRIPTION | TASK DESCRIPTION |
|---|---|---|---|
| 38 | 13COO | NOSE WHEEL STEERING SYSTEM | RR STEER SYSTEM |
| 39 | 13DAO | BRAKE ASSEMBLY, R.H./L.H. | REPAIR ASSEMBLY |
| 40 | 13DFO | ANTI-SKID SYSTEM | REPAIR SYSTEM |
| 41 | 13DFA | CONTROL UNIT, ANTI-SKID | REPAIR UNIT |
| 42 | 13GAA | PANEL, LANDING GEAR CONTROL | REMOVE PANEL |
| 43 | 13GAC | VALVE, LANDING GEAR SELECTOR | REPAIR VALVE |
| 44 | 14ABC | EMERGENCY FLIGHT CONTROL PANEL | REMOVE PANEL |
| 98 | 41EAA | CONTROL UNIT, ANIT-ICE SYSTEM | REPAIR UNIT |
| 104 | 42BAO | INVERTER, STANDBY | REPAIR INVERTER |
| 105 | 42FOO | AC/DC DISTRIBUTION SYSTEM | REPAIR SYSTEM |
| 106 | 42FAB | BOX ASSEMBLY, MISC RELAYS | REPAIR RELAYS |
| 107 | 42FAC | BOX ASSY, COCKPIT AC POWER RELAYS | REPAIR RELAYS |
| 108 | 42FAE | BOX ASSY, FUEL/ENGINE RELAYS | RR RELAYS |
| 109 | 42FAG | BOX ASSY, LANDING GEAR RELAYS | REPAIR RELAYS |
| 110 | 44AAO | CONTROL PANEL, EXT & INT LIGHT | REMOVE PANEL |
| 111 | 44BBO | POWER SUPPLY, STROBE LIGHTS | REPAIR SUPPLY |
| 112 | 44BEB | LIGHT, LOWER FUSELAGE | REPAIR LIGHT |
| 113 | 44BEC | LIGHT, FORMATION/TAIL FLOOD | REPAIR LIGHT |
| 114 | 44COO | INTERIOR LIGHTING SYSTEM | REPAIR SYSTEM |
| 115 | 44CDO | PANEL ASSEMBLY, AUX LIGHTING | REPAIR ASSY |
| 116 | 44CFO | PANEL, MASTER CAUTION ANNUNCIA | REMOVE PANEL |
| 117 | 44CGA | UTILITY LIGHT | REPAIR LIGHT |
| 140 | 49BOO | FIRE EXTINGUISHING SYSTEM | REPAIR SYSTEM |
| 141 | 41BAD | CANISTERS, EXTINGUISHING SYSTEM | REPAIR CANISTERS |

TOTAL NUMBER OF PART REPAIR TASKS = 24

III.1.4.4 TSAR SHOP #4 -- ENVIRONMENTAL SYSTEMS -

BEGINNING OF DAY SHIFT IS 0800. (CARD TYPE #18/1)
BREAK RATE MODIFIER = 75%. (CARD TYPE #18/2)

SHOP RESOURCE DATA (CARD TYPES #21 AND #22)

PERSONNEL DATA (MOB)

| PERSONNEL TYPE | DAY SHIFT | NIGHT SHIFT | TOTAL | TARGETED | AFSC | DESCRIPTION |
|---|---|---|---|---|---|---|
| 4 | 4 | 2 | 6 | 6 | 423X1 | SQUAD #1 |
| 34 | 4 | 2 | 6 | 6 | 423X1 | SQUAD #2 |
| 54 | 4 | 2 | 6 | 6 | 423X1 | SQUAD #3 |
| 84 | 2 | 2 | 4 | 4 | 423X1 | WING |
| 4 TYPES | 14 | 8 | 22 | 22 | TOTALS | |

PERSONNEL DATA (COB)

| PERSONNEL TYPE | DAY SHIFT | NIGHT SHIFT | TOTAL | TARGETED | AFSC | DESCRIPTION |
|---|---|---|---|---|---|---|
| 4 | 2 | 2 | 4 | 4 | 423X1 | SQUAD #1 |
| 84 | 2 | 2 | 4 | 4 | 423X1 | WING |
| 2 TYPES | 4 | 4 | 8 | 8 | TOTALS | |

AGE DATA (MOB)

| TSAR AGE TYPE | NUMBER | TARGETED | DESCRIPTION |
|---|---|---|---|
| 22 | 8 | 8 | NITROGEN BOTTLE |
| 1 TYPE | 8 | 8 | TOTALS |

AGE DATA (COB)

| TSAR AGE TYPE | NUMBER | TARGETED | DESCRIPTION |
|---|---|---|---|
| 22 | 5 | 5 | NITROGEN BOTTLE |
| 1 TYPE | 5 | 5 | TOTALS |

RESOURCE REQUIREMENTS
AIRCRAFT, PART AND SUPPORT EQUIPMENT REPAIR DATA

SHOP TASK DATA (CARD TYPES #5, #7, #8, AND #10)

ON-EQUIPMENT TASKS

| TSAR TASK #(NETWORK) | TASK PROB | TASK DESCRIPTION |
|---|---|---|
| 312 | .0034 | COCKPIT AIR TEMP CONTROL SYS |
| 318 | .0061 | AIR CONDITIONING SYSTEM |
| 334 | .0024 | PRESSURIZATION |
| 340 | .0008 | WASH SYSTEMS |
| 464 | .0055 | LOX SUPPLY SYSTEM |
| 688 | .0011 | PARACHUTE SYSTEM |

TOTAL NUMBER OF ON-EQUIPMENT TASK = 6
CUMULATIVE ON-EQUIPMENT PROBABILITY = 0.0193

PART REPAIR TASKS (CARD TYPE #8/1)

| PART NO | WUC CODE | PART DESCRIPTION | TASK DESCRIPTION |
|---|---|---|---|
| 88 | 41AAO | PANEL, ENVIRONMENTAL CONTROL | REMOVE PANEL |
| 89 | 41ABA | VALVE, TEMPERATURE CONTROL | REPAIR VALVE |
| 90 | 41ABF | CONTROLLER, CABIN TEMP SYSTEM | REPAIR CONTROL |
| 91 | 41BOO | AIR CONDITIONING SYSTEM | REPAIR AC SYSTEM |
| 92 | 41BAA | AIR CYCLE MACHINE | RR AIR CYCLE MACH |
| 93 | 41BAB | HOUSING AND ASPIRATOR ASSY | REPAIR ASSEMBLY |
| 94 | 41BBD | DUCTS, LEFT SIDE, SERVICE AIR | REPAIR DUCTS |
| 95 | 41BBM | OUTLET ASSY, CABIN AIR | REPAIR ASSEMBLY |
| 96 | 41BBN | VALVE, MANUAL CABIN AIR DIRECTOR | REPAIR VALVE |
| 97 | 41BCB | VALVE, PRESSURE REGULATING | REPAIR VALVE |
| 99 | 41GOO | WASH SYSTEMS | REPAIR SYSTEM |
| 100 | 41GAE | PRESSURE REGULATOR, WASH SYSTEM | REPAIR REGULATOR |
| 134 | 47A77 | CONNECTORS, AIRCRAFT ELECTRICAL | REPLACE CONNECTORS |
| 135 | 47AAO | CONVERTER ASSEMBLY, LOX | REPAIR ASSEMBLY |
| 136 | 47AAD | CAP, BUILD-UP AND VENT | REPAIR CAP |
| 137 | 47ABA | REGULATOR, DILUTER DEMAND | REPAIR REGULATOR |
| 138 | 47ACA | INDICATOR, LOX QUANTITY | REPAIR INDICATOR |
| 248 | 91BEA | CYLINDER ASSEMBLY | REPAIR ASSEMBLY |

TOTAL NUMBER OF PART REPAIR TASKS = 18

III.1.4.5 TSAR SHOP #5 -- EGRESS SYSTEMS -

BEGINNING OF DAY SHIFT IS 0800. (CARD TYPE #18/1)
BREAK RATE MODIFIER = 75%. (CARD TYPE #18/2)

SHOP RESOURCE DATA (CARD TYPES #21 AND #22)

PERSONNEL DATA (MOB)

| PERSONNEL TYPE | DAY SHIFT | NIGHT SHIFT | TOTAL | TARGETED | AFSC | DESCRIPTION |
|---|---|---|---|---|---|---|
| 5 | 4 | 4 | 8 | 8 | 423X2 | SQUAD #1 |
| 35 | 4 | 4 | 8 | 8 | 423X2 | SQUAD #2 |
| 55 | 4 | 4 | 8 | 8 | 423X2 | SQUAD #3 |
| 75 | 2 | 2 | 4 | 4 | 423X2 | WING |
| 4 TYPES | 14 | 14 | 28 | 28 | TOTALS | |

PERSONNEL DATA (COB)

| PERSONNEL TYPE | DAY SHIFT | NIGHT SHIFT | TOTAL | TARGETED | AFSC | DESCRIPTION |
|---|---|---|---|---|---|---|
| 5 | 2 | 2 | 4 | 4 | 423X2 | SQUAD #1 |
| 75 | 2 | 2 | 4 | 4 | 423X2 | WING |
| 2 TYPES | 4 | 4 | 8 | 8 | TOTALS | |

SHOP TASK DATA (CARD TYPES #5, #7, #8, AND #10)

ON-EQUIPMENT TASKS

| TSAR TASK #(NETWORK) | TASK PROB | TASK DESCRIPTION |
|---|---|---|
| 106 | 0014 | EJECTION SEAT SYSTEM |

TOTAL NUMBER OF ON-EQUIPMENT TASK = 1
CUMULATIVE ON-EQUIPMENT PROBABILITY = 0.0014

III.1.4.6 TSAR SHOP #6 -- PNEUDRAULICS -

BEGINNING OF DAY SHIFT IS 0800. (CARD TYPE #18/1)
BREAK RATE MODIFIER = 75%. (CARD TYPE #18/2)

SHOP RESOURCE DATA (CARD TYPES #21 AND #22)

PERSONNEL DATA (MOB)

| PERSONNEL TYPE | DAY SHIFT | NIGHT SHIFT | TOTAL | TARGETED | AFSC | DESCRIPTION |
|---|---|---|---|---|---|---|
| 6 | 5 | 2 | 7 | 7 | 423X4 | SQUAD #1 |
| 36 | 5 | 2 | 7 | 7 | 423X4 | SQUAD #2 |
| 56 | 5 | 2 | 7 | 7 | 423X4 | SQUAD #3 |
| 86 | 2 | 2 | 4 | 4 | 423X4 | WING |
| 4 TYPES | 17 | 8 | 25 | 25 | TOTALS | |

PERSONNEL DATA (COB)

| PERSONNEL TYPE | DAY SHIFT | NIGHT SHIFT | TOTAL | TARGETED | AFSC | DESCRIPTION |
|---|---|---|---|---|---|---|
| 6 | 2 | 2 | 4 | 4 | 423X4 | SQUAD #1 |
| 86 | 2 | 2 | 4 | 4 | 423X4 | WING |
| 2 TYPES | 4 | 4 | 8 | 8 | TOTALS | |

AGE DATA (MOB)

| TSAR AGE TYPE | NUMBER | TARGETED | DESCRIPTION |
|---|---|---|---|
| 3 | 9 | 9 | HYDRAULIC MULE |
| 4 | 9 | 9 | HYDRAULIC CART |
| 2 TYPES | 18 | 18 | TOTALS |

AGE DATA (COB)

| TSAR AGE TYPE | NUMBER | TARGETED | DESCRIPTION |
|---|---|---|---|
| 3 | 6 | 6 | HYDRAULIC MULE |
| 4 | 6 | 6 | HYDRAULIC CART |
| 2 TYPES | 12 | 12 | TOTALS |

RESOURCE REQUIREMENTS
AIRCRAFT, PART AND SUPPORT EQUIPMENT REPAIR DATA

SHOP TASK DATA (CARD TYPES #5, #7, #8, AND #10)

ON-EQUIPMENT TASKS

| TSAR TASK #(NETWORK) | TASK PROB | TASK DESCRIPTION |
|---|---|---|
| 168 | .0008 | MISC LANDING GEAR COMPONENTS |
| 410 | .0046 | RIGHT HYDRAULIC POWER SYSTEM |
| 418 | .0012 | APU DRIVEN HYDRAULIC SYSTEM |

TOTAL NUMBER OF ON-EQUIPMENT TASK = 3
CUMULATIVE ON-EQUIPMENT PROBABILITY = 0.0066

PART REPAIR TASKS (CARD TYPE #8/1)

| PART NO | WUC CODE | PART DESCRIPTION | TASK DESCRIPTION |
|---|---|---|---|
| 124 | 45BAA | PUMP, HYDRAULIC ENGINE DRIVEN | REPAIR PUMP |
| 125 | 45BDO | RIGHT HYDRAULIC RESERVOIR ASSY | REPAIR ASSEMBLY |
| 126 | 45DAO | PUMP, HYDRAULIC, 10 GPM | REPAIR PUMP |

TOTAL NUMBER OF PART REPAIR TASKS = 3

III.1.4.7 TSAR SHOP #7 -- ENGINE -

BEGINNING OF DAY SHIFT IS 0800. (CARD TYPE #18/1)
BREAK RATE MODIFIER = 75%. (CARD TYPE #18/2)

SHOP RESOURCE DATA (CARD TYPES #21 AND #22)

PERSONNEL DATA (MOB)

| PERSONNEL TYPE | DAY SHIFT | NIGHT SHIFT | TOTAL | TARGETED | AFSC | DESCRIPTION |
|---|---|---|---|---|---|---|
| 7 | 8 | 5 | 13 | 13 | 426X2 | SQUAD #1 |
| 37 | 8 | 5 | 13 | 13 | 426X2 | SQUAD #2 |
| 57 | 8 | 5 | 13 | 13 | 426X2 | SQUAD #3 |
| 87 | 8 | 4 | 12 | 12 | 426X2 | WING |
| 4 TYPES | 32 | 19 | 51 | 51 | TOTALS | |

PERSONNEL DATA (COB)

| PERSONNEL TYPE | DAY SHIFT | NIGHT SHIFT | TOTAL | TARGETED | AFSC | DESCRIPTION |
|---|---|---|---|---|---|---|
| 7 | 4 | 4 | 8 | 8 | 426X2 | SQUAD #1 |
| 87 | 8 | 4 | 12 | 12 | 426X2 | WING |
| 2 TYPES | 12 | 8 | 20 | 20 | TOTALS | |

AGE DATA (MOB)

| TSAR AGE TYPE | NUMBER | TARGETED | DESCRIPTION |
|---|---|---|---|
| 8 | 6 | 6 | ENGINE CART |
| 9 | 6 | 6 | ENGINE STAND |
| 10 | 10 | 10 | ENGINE HOIST ASSEMBLY |
| 3 TYPES | 22 | 22 | TOTALS |

AGE DATA (COB)

| TSAR AGE TYPE | NUMBER | TARGETED | DESCRIPTION |
|---|---|---|---|
| 8 | 4 | 4 | ENGINE CART |
| 9 | 4 | 4 | ENGINE STAND |
| 10 | 6 | 6 | ENGINE HOIST ASSEMBLY |
| 3 TYPES | 14 | 14 | TOTALS |

RESOURCE REQUIREMENTS
AIRCRAFT, PART AND SUPPORT EQUIPMENT REPAIR DATA

SHOP TASK DATA (CARD TYPES #5, #7, #8, AND #10)

ON-EQUIPMENT TASKS

| TSAR TASK #(NETWORK) | TASK PROB | TASK DESCRIPTION |
|---|---|---|
| 258 | .0509 | TURBO FAN POWER PLANT SYSTEM |
| 301 | .0069 | AUXILIARY POWER PLANT |
| 343 | .0087 | AC POWER GENERATING SYSTEM |

TOTAL NUMBER OF ON-EQUIPMENT TASK = 3
CUMULATIVE ON-EQUIPMENT PROBABILITY = 0 0665

PART REPAIR TASKS (CARD TYPE #8/1)

| PART NO | WUC CODE | PART DESCRIPTION | TASK DESCRIPTION |
|---|---|---|---|
| 63 | 23000 | TURBO FAN POWER PLANT SYSTEM | RR POWER PLANT |
| 64 | 23ALF | AFT SHROUD DRAIN SEAL | RR DRAIN SEAL |
| 65 | 23AEO | SEAL ASSEMBLY, FAN AIR DUCT | REPAIR ASSEMBLY |
| 66 | 23AHO | ENGINE TO NACELLE PYLON ASSY | REPAIR ASSEMBLY |
| 67 | 23CBB | FAN FORWARD CASING | REPAIR CASING |
| 68 | 23CPD | INTERTURBINE SEAL AND LINER | REPAIR SEAL |
| 69 | 23CSD | C-SUMP REAR COVER | REMOVE COVER |
| 70 | 23DCA | MAIN FUEL CONTROL | REPAIR CONTROL |
| 71 | 23DCJ | MAIN FUEL FILTER | REPAIR FILTER |
| 72 | 23DJL | AMPLIFIER CONTROL, T5 | REPAIR CONTROL |
| 73 | 23DKB | OIL FILLER TUBE | REPAIR TUBE |
| 74 | 23DLF | LUBE FILTER ELEMENT | REPAIR ELEMENT |
| 75 | 23GCA | GENERATOR, TACH CORE SPEED (NG) | REPAIR GENERATOR |
| 76 | 23GCB | INDICATOR, TACH, CORE SPEED (NG) | REPAIR INDICATOR |
| 77 | 23GCC | INDICATOR, TACH, FAN SPEED (NF) | REPAIR INDICATOR |
| 78 | 23GEA | INDICATOR, INTERTURBINE TEMP | REPAIR INDICATOR |
| 79 | 23GGB | INDICATOR, FUEL FLOW, LEFT ENGINE | REPAIR INDICATOR |
| 80 | 23GGC | INDICATOR, FUEL FLOW, RIGHT ENG | REPAIR INDICATOR |
| 81 | 23KAO | QUADRANT ASSEMBLY, ENGINE CONTROL | REPAIR ASSEMBLY |
| 82 | 23CAC | FAN BLADE | REPAIR BLADE |
| 83 | 23JAO | STARTER, AIR TURBINE | REPAIR STARTER |
| 84 | 23JBA | VALVE, ENGINE START, SOLENOID | REPAIR VALVE |
| 85 | 24AFA | FUEL CONTROL, ENGINE | RR FUEL CONTROL |
| 86 | 24AHA | CONTROL, ELECTR., AUX POWER PLANT | REPAIR CONTROL |
| 87 | 24AHE | THERMOCOUPLE, EGT,AUX POWER PLANT | REPAIR THERMOCLP |
| 101 | 42AOO | AC POWER GENERATING SYSTEM | REPAIR SYSTEM |
| 102 | 42AAO | INTEGRATED DRIVE GENERATOR | REPAIR GENERATOR |
| 103 | 42AEO | CONTROL UNIT, GENERATOR | REPAIR UNIT |

TOTAL NUMBER OF PART REPAIR TASKS = 28

III.1.4.8 TSAR SHOP #8 -- AUTOPILOT -

BEGINNING OF DAY SHIFT IS 0800 (CARD TYPE #18/1)
BREAK RATE MODIFIER = 75% (CARD TYPE #18/2)

SHOP RESOURCE DATA (CARD TYPES #21 AND #22)

PERSONNEL DATA (MOB)

| PERSONNEL TYPE | DAY SHIFT | NIGHT SHIFT | TOTAL | TARGETED | AFSC | DESCRIPTION |
|---|---|---|---|---|---|---|
| 8 | 2 | 2 | 4 | 4 | 325XO | SQUAD #1 |
| 38 | 2 | 2 | 4 | 4 | 325XO | SQUAD #2 |
| 58 | 2 | 2 | 4 | 4 | 325XO | SQUAD #3 |
| 88 | 2 | 2 | 4 | 4 | 325XO | WING |
| 4 TYPES | 8 | 8 | 16 | 16 | TOTALS | |

PERSONNEL DATA (COB)

| PERSONNEL TYPE | DAY SHIFT | NIGHT SHIFT | TOTAL | TARGETED | AFSC | DESCRIPTION |
|---|---|---|---|---|---|---|
| 8 | 2 | 2 | 4 | 4 | 325XO | SQUAD #1 |
| 88 | 2 | 2 | 4 | 4 | 325XO | WING |
| 2 TYPES | 4 | 4 | 8 | 8 | TOTALS | |

SHOP TASK DATA (CARD TYPES #5, #7, #8, AND #10)

ON-EQUIPMENT TASKS

| TSAR TASK #(NETWORK) | TASK PROB | TASK DESCRIPTION |
|---|---|---|
| 539 | .0053 | STABILITY AUGMENT SYSTEM |
| 543 | .0030 | BETA DOT COMPUTER SYSTEM |

TOTAL NUMBER OF ON-EQUIPMENT TASK = 2
CUMULATIVE ON-EQUIPMENT PROBABILITY = 0.0083

RESOURCE REQUIREMENTS
AIRCRAFT, PART AND SUPPORT EQUIPMENT REPAIR DATA

PART REPAIR TASKS (CARD TYPE #8/1)

| PART NO | WUC CODE | PART DESCRIPTION | TASK DESCRIPTION |
|---|---|---|---|
| 163 | 52AAO | COMPUTER, STABILITY AUGMENTATION | REPAIR COMPUTER |
| 164 | 52ACO | CONTROL PANEL, AUX FLIGHT | RR CNTL PANEL |
| 166 | 52BBO | COMPUTER, BETA DOT | REPAIR COMPUTER |

TOTAL NUMBER OF PART REPAIR TASKS = 3

III.1.4.9 TSAR SHOP #9 -- AVIONICS/INSTRUMENTATION -

BEGINNING OF DAY SHIFT IS 0800. (CARD TYPE #18/1)
BREAK RATE MODIFIER = 75%. (CARD TYPE #18/2)

SHOP RESOURCE DATA (CARD TYPES #21 AND #22)

PERSONNEL DATA (MOB)

| PERSONNEL TYPE | DAY SHIFT | NIGHT SHIFT | TOTAL | TARGETED | AFSC | DESCRIPTION |
|---|---|---|---|---|---|---|
| 9 | 5 | 2 | 7 | 7 | 325X1 | SQUAD #1 |
| 39 | 5 | 2 | 7 | 7 | 325X1 | SQUAD #2 |
| 59 | 5 | 2 | 7 | 7 | 325X1 | SQUAD #3 |
| 89 | 2 | 2 | 4 | 4 | 325X1 | WING |
| 4 TYPES | 17 | 8 | 25 | 25 | TOTALS | |

PERSONNEL DATA (COB)

| PERSONNEL TYPE | DAY SHIFT | NIGHT SHIFT | TOTAL | TARGETED | AFSC | DESCRIPTION |
|---|---|---|---|---|---|---|
| 9 | 2 | 2 | 4 | 4 | 325X1 | SQUAD #1 |
| 89 | 2 | 2 | 4 | 4 | 325X1 | WING |
| 2 TYPES | 4 | 4 | 8 | 8 | TOTALS | |

SHOP TASK DATA (CARD TYPES #5, #7, #8, AND #10)

ON-EQUIPMENT TASKS

| TSAR TASK #(NETWORK) | TASK PROB | TASK DESCRIPTION |
|---|---|---|
| 441 | .0053 | FUEL QUANTITY INDICAT SYSTEM |
| 502 | .0139 | FLIGHT INSTRUMENTS |
| 518 | .0047 | NAVIGATION INSTRUMENTS |
| 524 | .0079 | CONTROL SET, GYROSCOPE, ATT |
| 534 | .0026 | INDICATOR, HORIZONTAL SITUAT |
| 545 | .0024 | VGH RECORDING SYSTEM |
| 556 | .0014 | ENGINE TIME/TEMP RECORDER |

TOTAL NUMBER OF ON-EQUIPMENT TASK = 7
CUMULATIVE ON-EQUIPMENT PROBABILITY = 0.0382

PART REPAIR TASKS (CARD TYPE #8/1)

| PART NO | WUC CODE | PART DESCRIPTION | TASK DESCRIPTION |
|---|---|---|---|
| 130 | 46DAA | INDICATOR, FUEL QUANTITY & TOTAL | REPAIR INDICATOR |
| 131 | 46DAD | INTERMEDIATE DEVICE, FUEL QUAN | REPAIR DEVICE |
| 143 | 51COO | FLIGHT INSTRUMENTS | REPAIR INSTRUM |
| 144 | 51CAA | ACCELEROMETER, NORMAL | REPAIR ACCELER |
| 145 | 51CAB | INDICATOR, STANDBY ATTITUDE | REPAIR INDICATOR |
| 146 | 51CAC | INDICATOR, ATTITUDE DIRECTOR | REPAIR INDICATOR |
| 149 | 51CDK | COMPUTER, TRANSDUCER-ALTITUDE | RR COMPUTER |
| 150 | 51CDM | INDICATOR, AIRSPEED | REPAIR INDICATOR |
| 152 | 51CDR | ALTIMETER, AAU-34/A | REPAIR ALTIMETER |
| 153 | 51CDS | INDICATOR, VERTICAL | REPAIR INDICATOR |
| 154 | 51CGB | INDICATOR, ANGLE OF ATTACK | REPAIR INDICATOR |
| 155 | 51EOO | NAVIGATION INSTRUMENTS | REPAIR INSTRUM |
| 156 | 51EAA | CLOCK, AIRCRAFT, ABU-11/A | REPAIR CLOCK |
| 157 | 51FOO | CONTROL SET, GYROSCOPE, ATTITUDE | REPAIR SET |
| 158 | 51FAO | GYROSCOPE, DISPLACEMENT | REPAIR GYROSCOPE |
| 159 | 51FCO | AMPLIFIER, ELECTRONIC SYSTEM | REPAIR AMP |
| 160 | 51FEC | CONTROLLER, COMPASS SYSTEM | REPAIR CONTROL |
| 161 | 51FFO | DETECTOR, MAGNETIC AZIMUTH | RR DETECTOR |
| 162 | 51GAO | INDICATOR, HORIZONTAL SITUATION | REPAIR INDICATOR |
| 167 | 55AAO | RECORDER, SIGNAL DATA | REPAIR RECORDER |
| 168 | 55AAB | MAGAZINE, RECORDER | REPAIR MAGAZINE |
| 169 | 55ABO | CONVERTER/MULTIPLEXER | REPAIR CONVERTER |
| 170 | 55ACO | SENSING DEVICES | REPAIR DEVICES |
| 171 | 55ACC | ACCELEROMETER, NORMAL | REPAIR ACCELER |
| 172 | 55ACD | ACCELEROMETER, TRANSVERSE | REPAIR ACCELER |
| 173 | 55CAO | ENGINE TIME/TEMPERATURE RECORDER | REPAIR RECORDER |

TOTAL NUMBER OF PART REPAIR TASKS = 26

III.1 4 10 TSAR SHOP #10 -- SENSORS -

BEGINNING OF DAY SHIFT IS 0800. (CARD TYPE #18/1)
BREAK RATE MODIFIER = 75%. (CARD TYPE #18/2)

SHOP RESOURCE DATA (CARD TYPES #21 AND #22)

PERSONNEL DATA (MOB)

| PERSONNEL TYPE | DAY SHIFT | NIGHT SHIFT | TOTAL | TARGETED | AFSC | DESCRIPTION |
|---|---|---|---|---|---|---|
| 10 | 2 | 2 | 4 | 4 | 322X2 | SQUAD #1 |
| 40 | 2 | 2 | 4 | 4 | 322X2 | SQUAD #2 |
| 60 | 2 | 2 | 4 | 4 | 322X2 | SQUAD #3 |
| 90 | 2 | 2 | 4 | 4 | 322X2 | WING |
| 4 TYPES | 8 | 8 | 16 | 16 | TOTALS | |

PERSONNEL DATA (COB)

| PERSONNEL TYPE | DAY SHIFT | NIGHT SHIFT | TOTAL | TARGETED | AFSC | DESCRIPTION |
|---|---|---|---|---|---|---|
| 10 | 2 | 2 | 4 | 4 | 322X2 | SQUAD #1 |
| 90 | 2 | 2 | 4 | 4 | 322X2 | WING |
| 2 TYPES | 4 | 4 | 8 | 8 | TOTALS | |

SHOP TASK DATA (CARD TYPES #5, #7, #8, AND #10)

ON-EQUIPMENT TASKS

| TSAR TASK #(NETWORK) | TASK PROB | TASK DESCRIPTION |
|---|---|---|
| 601 | .0333 | TARGET ID SET LASER, P PENNY |

TOTAL NUMBER OF ON-EQUIPMENT TASK = 1
CUMULATIVE ON-EQUIPMENT PROBABILITY = 0.0333

PART REPAIR TASKS (CARD TYPE #8/1)

| PART NO | WUC CODE | PART DESCRIPTION | TASK DESCRIPTION |
|---|---|---|---|
| 202 | 74COC | TARGET ID SET LASER, PAVE PENNY | REPAIR POD |
| 203 | 74CAO | DETECTOR, LASER ILLUMIN TARGET | REPAIR DETECTOR |
| 204 | 74CBO | ADAPTER, CONTROL DETECTOR | REPAIR ADAPTER |

TOTAL NUMBER OF PART REPAIR TASKS = 3

III.1.4.11 TSAR SHOP #11 -- WHEEL/TIRE -

BEGINNING OF DAY SHIFT IS 0800. (CARD TYPE #18/1)
BREAK RATE MODIFIER = 75% (CARD TYPE #18/2)

SHOP RESOURCE DATA (CARD TYPES #21 AND #22)

PERSONNEL DATA (MOB)

| PERSONNEL TYPE | DAY SHIFT | NIGHT SHIFT | TOTAL | TARGETED | AFSC | DESCRIPTION |
|---|---|---|---|---|---|---|
| 11 | 4 | 2 | 6 | 6 | 431X1C | WING |
| 1 TYPE | 4 | 2 | 6 | 6 | TOTALS | |

PERSONNEL DATA (COB)

| PERSONNEL TYPE | DAY SHIFT | NIGHT SHIFT | TOTAL | TARGETED | AFSC | DESCRIPTION |
|---|---|---|---|---|---|---|
| 11 | 4 | 2 | 6 | 6 | 431X1C | WING |
| 1 TYPE | 4 | 2 | 6 | 6 | TOTALS | |

III.1.4.12 TSAR SHOP #12 -- RADIO COMMUNICATIONS -

BEGINNING OF DAY SHIFT IS 0800. (CARD TYPE #18/1)
BREAK RATE MODIFIER = 75%. (CARD TYPE #18/2)

SHOP RESOURCE DATA (CARD TYPES #21 AND #22)

PERSONNEL DATA (MOB)

| PERSONNEL TYPE | DAY SHIFT | NIGHT SHIFT | TOTAL | TARGETED | AFSC | DESCRIPTION |
|---|---|---|---|---|---|---|
| 12 | 4 | 2 | 6 | 6 | 328X0 | SQUAD #1 |
| 42 | 4 | 2 | 6 | 6 | 328X0 | SQUAD #2 |
| 62 | 4 | 2 | 6 | 6 | 328X0 | SQUAD #3 |
| 80 | 3 | 3 | 6 | 6 | 328X0 | WING |
| 4 TYPES | 15 | 9 | 24 | 24 | TOTALS | |

PERSONNEL DATA (COB)

| PERSONNEL TYPE | DAY SHIFT | NIGHT SHIFT | TOTAL | TARGETED | AFSC | DESCRIPTION |
|---|---|---|---|---|---|---|
| 12 | 4 | 2 | 6 | 6 | 328X0 | SQUAD #1 |
| 80 | 3 | 3 | 6 | 6 | 328X0 | WING |
| 2 TYPES | 7 | 5 | 12 | 12 | TOTALS | |

SHOP TASK DATA (CARD TYPES #5, #7, #8, AND #10)

ON-EQUIPMENT TASKS

| TSAR TASK #(NETWORK) | TASK PROB | TASK DESCRIPTION |
|---|---|---|
| 560 | 0200 | VHF/FM COMMUNICATION SYSTEM |
| 565 | 0072 | VHF/AM COMMUNICATION SYSTEM |
| 568 | 0059 | VHF/AM COMMUNICATION SYSTEM |
| 571 | 0137 | UHF COMMUNICATION SYSTEM |
| 576 | 0043 | INTERCOMMUNICATION SYSTEM |

TOTAL NUMBER OF ON-EQUIPMENT TASK = 5
CUMULATIVE ON-EQUIPMENT PROBABILITY = 0.0511

PART REPAIR TASKS (CARD TYPE #8/1)

| PART NO | WUC CODE | PART DESCRIPTION | TASK DESCRIPTION |
|---|---|---|---|
| 174 | 62AOO | VHF/FM COMMUNICATION SYSTEM | REPAIR SYSTEM |
| 175 | 62AAO | RADIO SET, REC/TRANMITTER FM | REPAIR SET |
| 176 | 62ACO | CONTROL, C-921/FM-622A | REPAIR CONTROL |
| 177 | 62ADO | ANTENNA ASSEMBLY, BLADE | REPAIR ASSEMBLY |
| 178 | 62CAO | RADIO SET, REC/TRANS VHF/AM | REPAIR SET |
| 179 | 62CCO | CONTROL UNIT, VHF/AM-807A | REPAIR UNIT |
| 180 | 62DAO | RADIO SET, REC/TRANS, RT130C | REPAIR SET |
| 181 | 62DBO | CONTROL UNIT, C-10604 | REPAIR UNIT |
| 182 | 63AOO | UHF COMMUNICATION SYSTEM | REPAIR SYSTEM |
| 183 | 63AAO | RADIO SET, REC/TRANS, UHF | REPAIR SET |
| 184 | 63ADO | DIRECTION FINDER, UHF/ADF/ARD | REPAIR FINDER |
| 185 | 63AFO | REMOTE CHANNEL FREQ INDICATOR | REPAIR INDICATOR |
| 186 | 64AAO | CONTROL, INTERCOMMUNICATIONS SET | REPAIR CONTROL |
| 187 | 64ACO | RELAY BOX, AVIONICS | REPAIR BOX |

TOTAL NUMBER OF PART REPAIR TASK = 14

III.1.4.13 TSAR SHOP #13 -- RADAR NAVIGATION -

BEGINNING OF DAY SHIFT IS 0800. (CARD TYPE #18/1)
BREAK RATE MODIFIER = 75%. (CARD TYPE #18/2)

SHOP RESOURCE DATA (CARD TYPES #21 AND #22)

PERSONNEL DATA (MOB)

| PERSONNEL TYPE | DAY SHIFT | NIGHT SHIFT | TOTAL | TARGETED | AFSC | DESCRIPTION |
|---|---|---|---|---|---|---|
| 13 | 4 | 2 | 6 | 6 | 328X1 | SQUAD #1 |
| 43 | 4 | 2 | 6 | 6 | 328X1 | SQUAD #2 |
| 63 | 4 | 2 | 6 | 6 | 328X1 | SQUAD #3 |
| 81 | 3 | 3 | 6 | 6 | 328X1 | WING |
| 4 TYPES | 15 | 9 | 24 | 24 | TOTALS | |

PERSONNEL DATA (COB)

| PERSONNEL TYPE | DAY SHIFT | NIGHT SHIFT | TOTAL | TARGETED | AFSC | DESCRIPTION |
|---|---|---|---|---|---|---|
| 13 | 4 | 2 | 6 | 6 | 328X1 | SQUAD #1 |
| 81 | 3 | 3 | 6 | 6 | 328X1 | WING |
| 2 TYPES | 7 | 5 | 12 | 12 | TOTALS | |

SHOP TASK DATA (CARD TYPES #5, #7, #8, AND #10)

ON-EQUIPMENT TASKS

| TSAR TASK #(NETWORK) | TASK PROB | TASK DESCRIPTION |
|---|---|---|
| 579 | .0200 | TRANSPONDER SET, AN/APX-101 |
| 585 | .0036 | NAV MODE CONTROLS |
| 588 | .0064 | INSTRUMENT LANDING SYSTEMS |
| 590 | .0038 | TACAN SYSTEM, AN/ARN-118 |
| 594 | .0008 | RADAR NAVIGATION SYSTEM |

TOTAL NUMBER OF ON-EQUIPMENT TASK = 5
CUMULATIVE ON-EQUIPMENT PROBABILITY = 0.0346

PART REPAIR TASKS (CARD TYPE #8/1)

| PART NO | WUC CODE | PART DESCRIPTION | TASK DESCRIPTION |
|---|---|---|---|
| 188 | 65A00 | TRANSPONDER SET | REPAIR SET |
| 189 | 65AA0 | RECEIVER/TRANSMITTER, IFF/SIF | REPAIR REC/TRANS |
| 190 | 65AB0 | CONTROL UNIT, C-6280A | REPAIR UNIT |
| 191 | 71CA0 | PANEL, NAV MODE SELECT | REPAIR PANEL |
| 192 | 71CC0 | RELAY BOX, NAV MOD, 51 RELAYS | REPAIR BOX |
| 193 | 71DB0 | RADIO RECEIVER, R1871 ARN-108 | REPAIR RECEIVER |
| 194 | 71ZA0 | RECEIVER/TRANS, RT-1159 ARN-118 | REPAIR REC/TRANS |
| 195 | 71ZB0 | ADAPTER, MX-9577/A | REPAIR ADAPTER |
| 196 | 71ZD0 | CONTROL PANEL, ARN-118 | REPAIR PANEL |
| 197 | 72AA0 | ENCODER/TRANSPONDER | REPAIR ENC/TRANS |

TOTAL NUMBER OF PART REPAIR TASKS = 10

III.1.4.14 TSAR SHOP #14 -- ECM SYSTEMS -

BEGINNING OF DAY SHIFT IS 0800 (CARD TYPE #18/1)
BREAK RATE MODIFIER = 75% (CARD TYPE #18/2)

SHOP RESOURCE DATA (CARD TYPES #21 AND #22)

PERSONNEL DATA (MOB)

| PERSONNEL TYPE | DAY SHIFT | NIGHT SHIFT | TOTAL | TARGETED | AFSC | DESCRIPTION |
|---|---|---|---|---|---|---|
| 14 | 8 | 4 | 12 | 12 | 328X3 | SQUAD #1 |
| 44 | 4 | 2 | 6 | 6 | 328X3 | SQUAD #2 |
| 64 | 4 | 2 | 6 | 6 | 328X3 | SQUAD #3 |
| 85 | 2 | 2 | 4 | 4 | 328X3 | WING |
| 4 TYPES | 18 | 10 | 28 | 28 | TOTALS | |

PERSONNEL DATA (COB)

| PERSONNEL TYPE | DAY SHIFT | NIGHT SHIFT | TOTAL | TARGETED | AFSC | DESCRIPTION |
|---|---|---|---|---|---|---|
| 14 | 4 | 2 | 6 | 6 | 328X3 | SQUAD #1 |
| 85 | 2 | 2 | 4 | 4 | 328X3 | WING |
| 2 TYPES | 6 | 4 | 10 | 10 | TOTALS | |

SHOP TASK DATA (CARD TYPES #5, #7, #8, AND #10)

ON-EQUIPMENT TASKS

| TSAR TASK #(NETWORK) | TASK PROB | TASK DESCRIPTION |
|---|---|---|
| 675 | .0179 | RADAR HOMING AND WARN SYSTEM |
| 684 | .1205 | ECM POD |
| 686 | .0037 | COMPASS TIE SYSTEM |

TOTAL NUMBER OF ON-EQUIPMENT TASK = 3
CUMULATIVE ON-EQUIPMENT PROBABILITY = 0.1421

RESOURCE REQUIREMENTS
AIRCRAFT, PART AND SUPPORT EQUIPMENT REPAIR DATA

PART REPAIR TASKS (CARD TYPE #8/1)

| PART NO | WUC CODE | PART DESCRIPTION | TASK DESCRIPTION |
|---|---|---|---|
| 241 | 76AAO | SIGNAL PROCESSOR | REPAIR PROCESSOR |
| 242 | 76ABO | AMPIFIER, DETECTORS | REPAIR AMP |
| 243 | 76AFO | INDICATOR, AZIMUTH | REPAIR INDICATOR |
| 244 | 76ARO | COMPASS SAIL AMPLIFIER DECTECTOR | REPAIR DETECTOR |
| 245 | 76ASO | INDICATOR, CONTROL | REPAIR INDICATOR |
| 246 | 76POD | ECM POD | REPAIR POD |

TOTAL NUMBER OF PART REPAIR TASKS = 6

III.1.4.15 TSAR SHOP #15 -- INERTIAL SYSTEMS -

BEGINNING OF DAY SHIFT IS 0800. (CARD TYPE #18/1)
BREAK RATE MODIFIER = 75%. (CARD TYPE #18/2)

SHOP RESOURCE DATA (CARD TYPES #21 AND #22)

PERSONNEL DATA (MOB)

| PERSONNEL TYPE | DAY SHIFT | NIGHT SHIFT | TOTAL | TARGETED | AFSC | DESCRIPTION |
|---|---|---|---|---|---|---|
| 15 | 5 | 2 | 7 | 7 | 328X4 | SQUAD #1 |
| 45 | 5 | 2 | 7 | 7 | 328X4 | SQUAD #2 |
| 65 | 5 | 2 | 7 | 7 | 328X4 | SQUAD #3 |
| 78 | 2 | 2 | 4 | 4 | 328X4 | WING |
| 4 TYPES | 17 | 8 | 25 | 25 | TOTALS | |

PERSONNEL DATA (COB)

| PERSONNEL TYPE | DAY SHIFT | NIGHT SHIFT | TOTAL | TARGETED | AFSC | DESCRIPTION |
|---|---|---|---|---|---|---|
| 15 | 5 | 2 | 7 | 7 | 328X4 | SQUAD #1 |
| 78 | 2 | 2 | 4 | 4 | 328X4 | WING |
| 2 TYPES | 7 | 4 | 11 | 11 | TOTALS | |

SHOP TASK DATA (CARD TYPES #5, #7, #8, AND #10)

ON-EQUIPMENT TASKS

| TSAR TASK #(NETWORK) | TASK PROB | TASK DESCRIPTION |
|---|---|---|
| 495 | .0058 | INERTIAL SYSTEMS |

TOTAL NUMBER OF ON-EQUIPMENT TASK = 1
CUMULATIVE ON-EQUIPMENT PROBABILITY = 0 0058

PART REPAIR TASKS (CARD TYPE #8/1)

| PART NO | WUC CODE | PART DESCRIPTION | TASK DESCRIPTION |
|---|---|---|---|
| 142 | 51INS | INERTIAL SYSTEMS | REPAIR INERT SYS |

TOTAL NUMBER OF PART REPAIR TASKS = 1

III.1.4.16 TSAR SHOP #16 -- FIRE CONTROL -

BEGINNING OF DAY SHIFT IS 0800. (CARD TYPE #18/1)
BREAK RATE MODIFIER = 75%. (CARD TYPE #18/2)

SHOP RESOURCE DATA (CARD TYPES #21 AND #22)

PERSONNEL DATA (MOB)

| PERSONNEL TYPE | DAY SHIFT | NIGHT SHIFT | TOTAL | TARGETED | AFSC | DESCRIPTION |
|---|---|---|---|---|---|---|
| 16 | 12 | 4 | 16 | 16 | 321X2Q | SQUAD #1 |
| 46 | 12 | 4 | 16 | 16 | 321X2Q | SQUAD #2 |
| 66 | 12 | 4 | 16 | 16 | 321X2Q | SQUAD #3 |
| 79 | 8 | 8 | 16 | 16 | 321X2Q | WING |
| 4 TYPES | 44 | 20 | 64 | 64 | TOTALS | |

PERSONNEL DATA (COB)

| PERSONNEL TYPE | DAY SHIFT | NIGHT SHIFT | TOTAL | TARGETED | AFSC | DESCRIPTION |
|---|---|---|---|---|---|---|
| 16 | 12 | 4 | 16 | 16 | 321X2Q | SQUAD #1 |
| 79 | 8 | 8 | 16 | 16 | 321X2Q | WING |
| 2 TYPES | 20 | 12 | 32 | 32 | TOTALS | |

SHOP TASK DATA (CARD TYPES #5, #7, #8, AND #10)

ON-EQUIPMENT TASKS

| TSAR TASK #(NETWORK) | TASK PROB | TASK DESCRIPTION |
|---|---|---|
| 596 | .0141 | HEAD-UP DISPLAY SYSTEM |
| 616 | .0172 | TV MONITOR, CARDION |
| 622 | .0036 | TV MONITOR, HARTMAN |

TOTAL NUMBER OF ON-EQUIPMENT TASK = 3
CUMULATIVE ON-EQUIPMENT PROBABILITY = 0.0349

PART REPAIR TASKS (CARD TYPE #8/1)

| PART NO | WUC CODE | PART DESCRIPTION | TASK DESCRIPTION |
|---|---|---|---|
| 198 | 74A00 | HEAD-UP DISPLAY | REPAIR DISPLAY |
| 199 | 74AA0 | PROJECTION UNIT, HEAD-UP DISPLAY | REPAIR UNIT |
| 200 | 74AB0 | SYMBOL GENERATOR | REPAIR GENERATOR |
| 201 | 74AC0 | CONTROL UNIT | REPAIR UNIT |
| 208 | 74E00 | TV MONITOR (CARDION) | REPAIR MONITOR |
| 209 | 74EA0 | DISPLAY UNIT, FIRE CONTROL | RR DISPLAY UNIT |
| 210 | 74EB0 | CONTROL UNIT, FIRE CONTROL | RR CONTROL UNIT |
| 211 | 74FA0 | DISPLAY UNIT, TV MONITOR | REPAIR UNIT |
| 212 | 74FB0 | CONTROL UNIT, TV MONITOR | REPAIR UNIT |

TOTAL NUMBER OF PART REPAIR TASKS = 9

III.1.4.17 TSAR SHOP #17 -- WEAPON CONTROL -

BEGINNING OF DAY SHIFT IS 0800. (CARD TYPE #18/1)
BREAK RATE MODIFIER = 75%. (CARD TYPE #18/2)

SHOP RESOURCE DATA (CARD TYPES #21 AND #22)

PERSONNEL DATA (MOB)

| PERSONNEL TYPE | DAY SHIFT | NIGHT SHIFT | TOTAL | TARGETED | AFSC | DESCRIPTION |
|---|---|---|---|---|---|---|
| 17 | 18 | 6 | 24 | 24 | 462WO | SQUAD #1 |
| 47 | 18 | 6 | 24 | 24 | 462WO | SQUAD #2 |
| 67 | 18 | 6 | 24 | 24 | 462WO | SQUAD #3 |
| 70 | 3 | 3 | 6 | 6 | 462WO | WING |
| 4 TYPES | 57 | 21 | 78 | 78 | TOTALS | |

PERSONNEL DATA (COB)

| PERSONNEL TYPE | DAY SHIFT | NIGHT SHIFT | TOTAL | TARGETED | AFSC | DESCRIPTION |
|---|---|---|---|---|---|---|
| 17 | 6 | 3 | 9 | 9 | 462WO | SQUAD #1 |
| 70 | 3 | 3 | 6 | 6 | 462WO | WING |
| 2 TYPES | 9 | 6 | 15 | 15 | TOTALS | |

SHOP TASK DATA (CARD TYPES #5, #7, #8, AND #10)

ON-EQUIPMENT TASKS

| TSAR TASK #(NETWORK) | TASK PROB | TASK DESCRIPTION |
|---|---|---|
| 1 | .0769 | FUSELAGE, FORWARD SECTION |
| 395 | .0058 | LEFT HYDRAULIC POWER SYSTEM |
| 625 | .1101 | GUN SYSTEM, 30MM |
| 643 | .0189 | ARMAMENT CONTROL SYSTEM |
| 653 | .0227 | PYLON, WING WEAPON STATION |
| 664 | .0015 | CABLE ADAPTERS |
| 668 | .0111 | RACKS |

TOTAL NUMBER OF ON-EQUIPMENT TASK = 7
CUMULATIVE ON-EQUIPMENT PROBABILITY = 0.2470

PART REPAIR TASKS (CARD TYPE #8/1)

| PART NO | WUC CODE | PART DESCRIPTION | TASK DESCRIPTION |
|---|---|---|---|
| 2 | 11AFC | GLASS, SIDE WINDSHIELD, L.H./R.H. | REPAIR GLASS |
| 3 | 11ALO | BALLAST, VARIABLE | REPAIR BALLAST |
| 4 | 11ARB | F2, OXYGEN CONVERTER | REPAIR CONVERTER |
| 5 | 11ARE | F5, SAFING AND GUN REMOVAL ACCESS | REPAIR ACCESS |
| 6 | 11ARV | F14, ARMAMENT CIRCUIT BREAKER | REPAIR BREAKER |
| 7 | 11ASH | F44, AVIONICS ACCESS | REPAIR ACCESS |
| 8 | 11ASK | F61, INVERTER, BATTERY RELAY BOX | REPAIR INVERTER |
| 9 | 11ASP | F65, BATTERY ACCESS | REPAIR ACCESS |
| 10 | 11AST | F69, LADDER COMPARTMENT | REPAIR COMPART |
| 11 | 11ATE | F103, AVIONICS ACCESS | REPAIR ACCESS |
| 118 | 45AOO | LEFT HYDRAULIC POWER SYSTEM | REPAIR SYSTEM |
| 119 | 45AAA | PUMP, HYDRAULIC ENGINE DRIVEN | REPAIR PUMP |
| 120 | 45ACL | VALVE, SYSTEM SHUT OFF | REPAIR VALVE |
| 121 | 45ACT | ACCUMULATOR, BOOT STRAP | REPAIR ACCUMULAT |
| 122 | 45ADO | LEFT HYDRAULIC RESERVOIR ASSEMBLY | REPAIR ASSEMBLY |
| 123 | 45AFD | HOSE, PRESSURE, ENGINE/FUSE PYLON | REPAIR HOSE |
| 213 | 75AAO | GUN, 30 MM | REPAIR GUN |
| 214 | 75ABO | DRUM, AMMUNITION | REPAIR DRUM |
| 215 | 75ADO | GUN, 30 MM, OTHER | REPAIR |
| 216 | 75AFO | ACCESS UNIT, WEAPON DELIVERY | REPAIR UNIT |
| 217 | 75ALO | BELT, CONVEYOR | REPAIR BELT |
| 218 | 75AMO | WEAPON DELIVERY, OTHER | REPAIR |
| 219 | 75ANO | WEAPON DELIVERY, OTHER | REPAIR |
| 220 | 75ASO | ELECTRONIC CONTROL UNIT | REPAIR UNIT |
| 221 | 75AUO | DRIVE SYSTEM | REPAIR SYSTEM |
| 222 | 75AUB | DRIVE, HYDRAULIC MOTOR | REPAIR DRIVE |
| 223 | 75AWO | TRANSFER UNIT | REPAIR UNIT |
| 224 | 75BOO | ARMAMENT CONTROL SYSTEM | REPAIR SYSTEM |
| 225 | 75BAO | PANEL, ARMAMENT CONTROL | REPAIR PANEL |
| 226 | 75BAS | INDICATOR, STORES LOADING DISPLAY | REPAIR INDICATOR |
| 227 | 75BCO | INTERSTATION CONTROL UNIT | REPAIR UNIT |
| 228 | 75BDO | STATION CONTROL UNIT, TYPE A | REPAIR UNIT |
| 229 | 75BEO | WEAPON DELIVERY, OTHER | REPAIR |
| 230 | 75COO | EXTERNAL ARMAMENT SYSTEM | REPAIR SYSTEM |
| 231 | 75CAO | PYLON, WING WEAPON STATION 1 & 11 | REPAIR PYLON |
| 232 | 75CCO | PYLON, WING WEAPON STATION 2 & 10 | REPAIR PYLON |
| 233 | 75CCF | SEAL ASSEMBLY, PYLON | REPAIR ASSEMBLY |
| 234 | 75CDO | PYLON, WING WEAPON STATION 4 & 8 | REPAIR PYLON |
| 235 | 75DOO | CABLE ADAPTERS | REPAIR ADAPTERS |
| 236 | 75DCO | TER-9 ADAPTER | REPAIR ADAPTERS |
| 237 | 75DDO | LAU-88 ADAPTER | REPAIR ADAPTER |
| 238 | 75FAO | BOMB RACK, MAU-40/A | REPAIR RACK |
| 239 | 75FBO | BOMB RACK, MAU-50/A | REPAIR RACK |
| 240 | 75FDO | TRIPLE-EJECTOR RACK TER-9A | RR RACK |

TOTAL NUMBER OF PART REPAIR TASKS = 39

III.1.4.18 TSAR SHOP #18 -- MACHINE SHOP -

BEGINNING OF DAY SHIFT IS 0800. (CARD TYPE #18/1)
BREAK RATE MODIFIER = 75%. (CARD TYPE #18/2)

SHOP RESOURCE DATA (CARD TYPES #21 AND #22)

PERSONNEL DATA (MOB)

| PERSONNEL TYPE | DAY SHIFT | NIGHT SHIFT | TOTAL | TARGETED | AFSC | DESCRIPTION |
|---|---|---|---|---|---|---|
| 18 | 6 | 2 | 8 | 8 | 427XO | WING |
| 1 TYPE | 6 | 2 | 8 | 8 | TOTALS | |

PERSONNEL DATA (COB)

| PERSONNEL TYPE | DAY SHIFT | NIGHT SHIFT | TOTAL | TARGETED | AFSC | DESCRIPTION |
|---|---|---|---|---|---|---|
| 18 | 6 | 2 | 8 | 8 | 427XO | WING |
| 1 TYPE | 6 | 2 | 8 | 8 | TOTALS | |

III.1.4.19 TSAR SHOP #19 -- WELDING SHOP -

BEGINNING OF DAY SHIFT IS 0800. (CARD TYPE #18/1)
BREAK RATE MODIFIER = 75%. (CARD TYPE #18/2)

SHOP RESOURCE DATA (CARD TYPES #21 AND #22)

PERSONNEL DATA (MOB)

| PERSONNEL TYPE | DAY SHIFT | NIGHT SHIFT | TOTAL | TARGETED | AFSC | DESCRIPTION |
|---|---|---|---|---|---|---|
| 19 | 4 | 3 | 7 | 7 | 427X4 | WING |
| 1 TYPE | 4 | 3 | 7 | 7 | TOTALS | |

PERSONNEL DATA (COB)

| PERSONNEL TYPE | DAY SHIFT | NIGHT SHIFT | TOTAL | TARGETED | AFSC | DESCRIPTION |
|---|---|---|---|---|---|---|
| 19 | 4 | 3 | 7 | 7 | 427X4 | WING |
| 1 TYPE | 4 | 3 | 7 | 7 | TOTALS | |

III.1.4.20 TSAR SHOP #20 -- CAMERA SHOP -

BEGINNING OF DAY SHIFT IS 0800. (CARD TYPE #18/1)
BREAK RATE MODIFIER = 75%. (CARD TYPE #18/2)

SHOP RESOURCE DATA (CARD TYPES #21 AND #22)

PERSONNEL DATA (MOB)

| PERSONNEL TYPE | DAY SHIFT | NIGHT SHIFT | TOTAL | TARGETED | AFSC | DESCRIPTION |
|---|---|---|---|---|---|---|
| 20 | 2 | 2 | 4 | 4 | 404X1 | WING |
| 1 TYPE | 2 | 2 | 4 | 4 | TOTALS | |

PERSONNEL DATA (COB)

| PERSONNEL TYPE | DAY SHIFT | NIGHT SHIFT | TOTAL | TARGETED | AFSC | DESCRIPTION |
|---|---|---|---|---|---|---|
| 20 | 2 | 2 | 4 | 4 | 404X1 | WING |
| 1 TYPE | 2 | 2 | 4 | 4 | TOTALS | |

SHOP TASK DATA (CARD TYPES #5, #7, #8, AND #10)

ON-EQUIPMENT TASKS

| TSAR TASK #(NETWORK) | TASK PROB | TASK DESCRIPTION |
|---|---|---|
| 609 | .0036 | GUN CAMERA SYSTEM |

TOTAL NUMBER OF ON-EQUIPMENT TASK = 1
CUMULATIVE ON-EQUIPMENT PROBABILITY = 0.0036

PART REPAIR TASKS (CARD TYPE #8/1)

| PART NO | WUC CODE | PART DESCRIPTION | TASK DESCRIPTION |
|---|---|---|---|
| 205 | 74D00 | GUN CAMERA SYSTEM | REPAIR CAMERA |
| 206 | 74DAD | ELECTRONICS MODULE | RR MODULE |
| 207 | 74DCO | MAGAZINE 100 FT LB-41A | REPAIR MAGAZINE |

TOTAL NUMBER OF PART REPAIR TASKS = 3

III.1.4.21 TSAR SHOP #21 -- HEAVY REPAIR -

BEGINNING OF DAY SHIFT IS 0800. (CARD TYPE #18/1)
BREAK RATE MODIFIER = 75%. (CARD TYPE #18/2)

SHOP RESOURCE DATA (CARD TYPES #21 AND #22)

PERSONNEL DATA (MOB)

| PERSONNEL TYPE | DAY SHIFT | NIGHT SHIFT | TOTAL | TARGETED | AFSC | DESCRIPTION |
|---|---|---|---|---|---|---|
| 21 | 18 | 10 | 28 | 28 | 431X1C | WING |
| 1 TYPE | 18 | 10 | 28 | 28 | TOTALS | |

PERSONNEL DATA (COB)

| PERSONNEL TYPE | DAY SHIFT | NIGHT SHIFT | TOTAL | TARGETED | AFSC | DESCRIPTION |
|---|---|---|---|---|---|---|
| 21 | 18 | 10 | 28 | 28 | 431X1C | WING |
| 1 TYPE | 18 | 10 | 28 | 28 | TOTALS | |

AGE DATA (MOB)

| TSAR AGE TYPE | NUMBER | TARGETED | DESCRIPTION |
|---|---|---|---|
| 2 | 6 | 6 | OIL CART |
| 5 | 15 | 15 | E-1 MAINT STAND |
| 6 | 28 | 28 | B-4 MAINT STAND |
| 7 | 21 | 21 | C-1 MAINT STAND |
| 11 | 9 | 9 | AM32A-60 GENERATOR |
| 12 | 8 | 8 | MC-1A AIR COMPRESSOR |
| 13 | 13 | 13 | MC-2A AIR COMPRESSOR |
| 14 | 17 | 17 | AXLE JACK |
| 15 | 30 | 30 | WING JACK |
| 18 | 8 | 8 | LOX CART |
| 10 TYPES | 155 | 155 | TOTALS |

RESOURCE REQUIREMENTS
AIRCRAFT, PART AND SUPPORT EQUIPMENT REPAIR DATA

AGE DATA (COB)

| TSAR AGE TYPE | NUMBER | TARGETED | DESCRIPTION |
|---|---|---|---|
| 2 | 4 | 4 | OIL CART |
| 5 | 10 | 10 | B-1 MAINT STAND |
| 6 | 18 | 18 | B-4 MAINT STAND |
| 7 | 14 | 14 | C-1 MAINT STAND |
| 11 | 6 | 6 | AM32A-60 GENERATOR |
| 12 | 5 | 5 | MC-1A AIR COMPRESSOR |
| 13 | 8 | 8 | MC-2A AIR COMPRESSOR |
| 14 | 11 | 11 | AXLE JACK |
| 15 | 20 | 20 | WING JACK |
| 18 | 5 | 5 | LOX CART |
| 10 TYPES | 101 | 101 | TOTALS |

SHOP TASK DATA (CARD TYPES #5, #7, #8, AND #10)

ON-EQUIPMENT TASKS

| TSAR TASK #(NETWORK) | TASK PROB | TASK DESCRIPTION |
|---|---|---|
| 92 | .0085 | CANOPY INSTALLATION |
| 112 | .0128 | MAIN LANDING GEAR |
| 179 | .0037 | ROLL CONTROL SYSTEM |
| 192 | .0081 | PITCH CONTROL SYSTEM |
| 209 | .0053 | YAW CONTROL SYSTEM |
| 217 | .0028 | TRAILING EDGE FLAP SYSTEM |
| 234 | .0022 | SPEED BRAKE SYSTEM |
| 241 | .0056 | LEADING EDGE SLAT SYSTEM |

TOTAL NUMBER OF ON-EQUIPMENT TASK = 8
CUMULATIVE ON-EQUIPMENT PROBABILITY = 0.0490

RESOURCE REQUIREMENTS
AIRCRAFT, PART AND SUPPORT EQUIPMENT REPAIR DATA

PART REPAIR TASKS (CARD TYPE #8/1)

| PART NO | WUC CODE | PART DESCRIPTION | TASK DESCRIPTION |
|---|---|---|---|
| 32 | 12GGA | ACTUATOR ASSY, CANOPY | RR ACT ASSEMBLY |
| 35 | 13AOO | MAIN LANDING GEAR | REPAIR GEAR |
| 36 | 13ADO | ACTUATOR, MAIN LAND GEAR RETRACT | REPAIR ACTUATOR |
| 45 | 14CCA | ACTUATOR, AILERON | REPAIR ACTUATOR |
| 46 | 14CDA | ACTUATOR, SERVO TAB SHIFTER | REPAIR ACTUATOR |
| 47 | 14CDB | ACTUATOR, TRIM STEPPER | REPAIR ACTUATOR |
| 48 | 14EOO | PITCH CONTROL SYSTEM | REPAIR SYSTEM |
| 49 | 14EAO | ELEVATOR ASSEMBLY, L.H./R.H. | REPAIR ASSEMBLY |
| 50 | 14EAA | TAB TRIM | RR TAB TRIM |
| 51 | 14EBM | TORQUESHAFT, ELEVATOR ACTUATOR | REPAIR TORQUESHFT |
| 52 | 14ECA | ACTUATOR, ELEVATOR | REPAIR ACTUATOR |
| 53 | 14EDA | ACTUATOR, PITCH TRIM | REPAIR ACTUATOR |
| 54 | 14EDB | ACTUATOR, PITCH TRIM TAB | REPAIR ACTUATOR |
| 55 | 14GAO | RUDDER ASSEMBLY, L.H./R.H. | REPAIR ASSEMBLY |
| 56 | 14GCA | ACTUATOR, RUDDER | REPAIR ACTUATOR |
| 57 | 14KAO | FLAP ASSEMBLY, INBOARD | REPAIR ASSEMBLY |
| 58 | 14KBO | FLAP ASSEMBLY, OUTBOARD | REPAIR ASSEMBLY |
| 59 | 14KDA | ACTUATOR, FLAP | REPAIR ACTUATOR |
| 60 | 14NAO | SLAT ASSEMBLY | REPAIR ASSEMBLY |
| 61 | 14NCA | ACTUATOR, SLAT | REPAIR ACTUATOR |
| 62 | 14NCB | VALVE ASSEMBLY, CONTROL | REPAIR ASSEMBLY |

TOTAL NUMBER OF PART REPAIR TASKS = 21

III.1.4.22 TSAR SHOP #22 -- AGE REPAIR -

BEGINNING OF DAY SHIFT IS 0800. (CARD TYPE #18/1)
BREAK RATE MODIFIER = 75%. (CARD TYPE #18/2)

SHOP TASK DATA (CARD TYPES #5, #7, #8, AND #10)

EQUIPMENT REPAIR TASKS

| TSAR AGE | PROB | AGE DESCRIPTION | TASK DESCRIPTION |
|---|---|---|---|
| 2 | .0010 | OIL CART | REPAIR OIL CART |
| 3 | .0010 | HYDRAULIC MULE | REPAIR HYDR MULE |
| 4 | .0010 | HYDRAULIC CART | REPAIR HYDR CART |
| 5 | .0010 | B-1 MAINT STAND | REPAIR MAINT STAND |
| 6 | .0010 | B-4 MAINT STAND | REPAIR MAINT STAND |
| 7 | .0010 | C-1 MAINT STAND | REPAIR MAINT STAND |
| 11 | .1100 | AM32A-60 GENERATOR | REPAIR GENERATOR |
| 12 | .0500 | MC-1A AIR COMPRESSOR | REPAIR COMPRESSOR |
| 13 | .0500 | MC-2A AIR COMPRESSOR | REPAIR COMPRESSOR |
| 14 | .0010 | AXLE JACK | REPAIR JACK |
| 15 | .0010 | WING JACK | REPAIR JACK |
| 18 | .0100 | LOX CART | REPAIR LOX CART |
| 21 | .0001 | GUN LOADER GFU-7 | REPAIR LOADER |

TOTAL NUMBER OF EQUIPMENT REPAIR TASKS = 13

III.1.4.23 TSAR SHOP #23 -- FUEL SYSTEMS -

BEGINNING OF DAY SHIFT IS 0800. (CARD TYPE #18/1)
BREAK RATE MODIFIER = 75%. (CARD TYPE #18/2)

SHOP RESOURCE DATA (CARD TYPES #21 AND #22)

PERSONNEL DATA (MOB)

| PERSONNEL TYPE | DAY SHIFT | NIGHT SHIFT | TOTAL | TARGETED | AFSC | DESCRIPTION |
|---|---|---|---|---|---|---|
| 23 | 12 | 7 | 19 | 19 | 423X3 | WING |
| 1 TYPE | 12 | 7 | 19 | 19 | TOTALS | |

PERSONNEL DATA (COB)

| PERSONNEL TYPE | DAY SHIFT | NIGHT SHIFT | TOTAL | TARGETED | AFSC | DESCRIPTION |
|---|---|---|---|---|---|---|
| 23 | 12 | 7 | 19 | 19 | 423X3 | WING |
| 1 TYPE | 12 | 7 | 19 | 19 | TOTALS | |

AGE DATA (MOB)

| TSAR AGE TYPE | NUMBER | TARGETED | DESCRIPTION |
|---|---|---|---|
| 16 | 6 | 6 | FUEL BOWERS |
| 17 | 12 | 12 | FUEL TANK LOADER |
| 2 TYPES | 18 | 18 | TOTALS |

AGE DATA (COB)

| TSAR AGE TYPE | NUMBER | TARGETED | DESCRIPTION |
|---|---|---|---|
| 16 | 4 | 4 | FUEL BOWERS |
| 17 | 8 | 8 | FUEL TANK LOADER |
| 2 TYPES | 12 | 12 | TOTALS |

RESOURCE REQUIREMENTS
AIRCRAFT, PART AND SUPPORT EQUIPMENT REPAIR DATA

SHOP TASK DATA (CARD TYPES #5, #7, #8, AND #10)

ON-EQUIPMENT TASKS

| TSAR TASK #(NETWORK) | TASK PROB | TASK DESCRIPTION |
|---|---|---|
| 420 | .0036 | FUEL TANK INSTALLATION |
| 429 | .0053 | AERIAL REFUELING RECEPTACLE |
| 435 | .0023 | FUEL VENT/PRESSURE INSTALLAT |
| 448 | .0025 | FUEL FEED SYSTEM |
| 457 | .0026 | GROUND REFUELING SYSTEM |

TOTAL NUMBER OF ON-EQUIPMENT TASK = 5
CUMULATIVE ON-EQUIPMENT PROBABILITY = 0.0163

PART REPAIR TASKS (CARD TYPE #8/1)

| PART NO | WUC CODE | PART DESCRIPTION | TASK DESCRIPTION |
|---|---|---|---|
| 127 | 46EAO | FUEL TANK, EXTERNAL, 600 GAL | RR FUEL TANK |
| 128 | 46BDA | RELAY ELECTRICAL, FUEL SYSTEM | REPAIR RELAY |
| 129 | 46BDK | AMPLIFIER, SIGNAL, FUEL SYSTEM | REPAIR AMP |
| 132 | 46EAO | PUMP ASSY, LEFT/RIGHT MAIN TANK | REPAIR ASSEMBLY |
| 133 | 46FBF | VALVE, RIGHT WING PILOT SHUTOFF | REPAIR VALVE |

TOTAL NUMBER OF PART REPAIR TASKS = 4

III.1.4.24 TSAR SHOP #24 -- N.D.I./CORR. CNTL/PARACHUTE -

BEGINNING OF DAY SHIFT IS 0800. (CARD TYPE #18/1)
BREAK RATE MODIFIER = 75%. (CARD TYPE #18/2)

SHOP RESOURCE DATA (CARD TYPES #21 AND #22)

PERSONNEL DATA (MOB)

| PERSONNEL TYPE | DAY SHIFT | NIGHT SHIFT | TOTAL | TARGETED | AFSC | DESCRIPTION |
|---|---|---|---|---|---|---|
| 24 | 6 | 5 | 11 | 11 | 582X1 | WING |
| 25 | 4 | 4 | 8 | 8 | 531X5 | WING |
| 26 | 8 | 5 | 13 | 13 | 531X4 | WING |
| 3 TYPES | 18 | 14 | 32 | 32 | TOTALS | |

PERSONNEL DATA (COB)

| PERSONNEL TYPE | DAY SHIFT | NIGHT SHIFT | TOTAL | TARGETED | AFSC | DESCRIPTION |
|---|---|---|---|---|---|---|
| 24 | 6 | 5 | 11 | 11 | 582X1 | WING |
| 25 | 4 | 4 | 8 | 8 | 531X5 | WING |
| 26 | 8 | 5 | 13 | 13 | 531X4 | WING |
| 3 TYPES | 18 | 14 | 32 | 32 | TOTALS | |

III.1 4.25 TSAR SHOP #25 -- FLIGHTLINE -

BEGINNING OF DAY SHIFT IS 0600. (CARD TYPE #18/1)
BREAK RATE MODIFIER = 75%. (CARD TYPE #18/2)

SHOP RESOURCE DATA (CARD TYPES #21 AND #22)

AGE DATA (MOB)

| TSAR AGE TYPE | NUMBER | TARGETED | DESCRIPTION |
|---|---|---|---|
| 19 | 20 | 20 | GUN TRAILER |
| 20 | 16 | 16 | MHU-83 BOMBLIFT |
| 21 | 24 | 24 | GUN LOADER GFU-7 |
| 3 TYPES | 60 | 60 | TOTALS |

AGE DATA (COB)

| TSAR AGE TYPE | NUMBER | TARGETED | DESCRIPTION |
|---|---|---|---|
| 19 | 14 | 14 | GUN TRAILER |
| 20 | 10 | 10 | MHU-83 BOMBLIFT |
| 21 | 16 | 16 | GUN LOADER GFU-7 |
| 3 TYPES | 40 | 40 | TOTALS |

III.1.4.26 TSAR SHOP #28 -- MUNITIONS LOADING -

BEGINNING OF DAY SHIFT IS 0400. (CARD TYPE #18/1)
BREAK RATE MODIFIER = 75%. (CARD TYPE #18/2)

SHOP RESOURCE DATA (CARD TYPES #21 AND #22)

PERSONNEL DATA (MOB)

| PERSONNEL TYPE | DAY SHIFT | NIGHT SHIFT | TOTAL | TARGETED | AFSC | DESCRIPTION |
|---|---|---|---|---|---|---|
| 27 | 18 | 6 | 24 | 24 | 462GO | WING |
| 28 | 92 | 28 | 120 | 96 | 462LO | WING |
| 29 | 6 | 4 | 10 | 10 | 322XO | WING |
| 50 | 5 | 4 | 9 | 9 | 322XO | WING |
| 4 TYPES | 121 | 42 | 153 | 139 | TOTALS | |

PERSONNEL DATA (COB)

| PERSONNEL TYPE | DAY SHIFT | NIGHT SHIFT | TOTAL | TARGETED | AFSC | DESCRIPTION |
|---|---|---|---|---|---|---|
| 27 | 4 | 0 | 4 | 4 | 462GO | WING |
| 28 | 4 | 0 | 4 | 4 | 462LO | WING |
| 29 | 4 | 2 | 6 | 6 | 322XO | WING |
| 50 | 5 | 4 | 9 | 9 | | |
| 4 TYPES | 17 | 6 | 23 | 23 | TOTALS | |

III.1.4.27 TSAR SHOP #30 -- MUNITIONS ASSY/CIVIL ENGIN -

BEGINNING OF DAY SHIFT IS 0200. (CARD TYPE #18/1)
BREAK RATE MODIFIER = 75%. (CARD TYPE #18/2)

SHOP RESOURCE DATA (CARD TYPES #21 AND #22)

PERSONNEL DATA (MOB)

| PERSONNEL TYPE | DAY SHIFT | NIGHT SHIFT | TOTAL | TARGETED | AFSC | DESCRIPTION |
|---|---|---|---|---|---|---|
| 22 | 12 | 6 | 18 | 18 | 316X1L | WING |
| 30 | 33 | 15 | 48 | 48 | 461X0 | WING |
| 197 | 30 | 30 | 60 | 60 | | CE/RRR |
| 198 | 62 | 62 | 124 | 50 | | CE/RRR |
| 199 | 100 | 100 | 200 | 50 | | CE/RRR |
| 5 TYPES | 237 | 213 | 450 | 226 | TOTALS | |

PERSONNEL DATA (COB)

| PERSONNEL TYPE | DAY SHIFT | NIGHT SHIFT | TOTAL | TARGETED | AFSC | DESCRIPTION |
|---|---|---|---|---|---|---|
| 22 | 12 | 6 | 18 | 18 | 316X1L | WING |
| 30 | 33 | 15 | 48 | 48 | 461X0 | WING |
| 2 TYPES | 45 | 21 | 66 | 66 | TOTALS | |

## III 1.5 TASK NETWORK DATA

THE FOLLOWING PLOTS GRAPHICALLY REPRESENT EACH ON-EQUIPMENT TASK NETWORK. NEGATIVE PROBABILITIES IN A SUBTASK REPRESENT "MUTUALLY EXCLUSIVE" SUBTASKS, WHEREAS POSITIVE PROBABILITIES REPRESENT "PARALLEL" SUBTASKS SINGLE TASK NETWORKS WILL NOT HAVE ASSOCIATED GRAPHIC PLOTS.

### III.1.5.1 TASK #1 NETWORK -

11A** -- FUSELAGE, FOWARD SECTION

| | | PERSONNEL | | | | | | | | |
|---|---|---|---|---|---|---|---|---|---|---|
| | | TEAM 1 | | TEAM 2 | | AGE | | PART | | |
| SUBTASK | PROB | TYP | # | TYP | # | #1 | #2 | NO | TIME | DIS |
| 2 | .020 | 1 | 1 | - | - | - | - | - | 42 | 0 |
| 3 | .060 | 21 | 2 | - | - | - | - | - | 132 | 0 |
| 4 | .190 | 17 | 3 | - | - | - | - | - | 72 | 0 |
| 5 | -.220 | 2 | 1 | - | - | - | - | - | 198 | 0 |
| 6 | -.730 | 16 | 1 | - | - | - | - | - | 30 | 0 |
| 7 | -.030 | 1 | 1 | - | - | - | - | - | 48 | 0 |
| 8 | -.010 | 21 | 2 | - | - | - | - | - | 156 | 0 |
| 9 | -.010 | 17 | 3 | - | - | - | - | - | 84 | 0 |
| 10 | -.050 | 1 | 1 | - | - | 6 | - | - | 48 | 0 |
| 11 | -.070 | 21 | 2 | - | - | 6 | - | - | 336 | 0 |
| 12 | -.090 | 17 | 3 | - | - | 6 | - | - | 72 | 0 |
| 13 | 1.000 | - | - | - | - | - | - | - | - | 0 |
| 14 | .140 | - | - | - | - | - | - | 1 | - | 0 |
| 15 | -.140 | 1 | 1 | - | - | - | - | 2 | - | 0 |
| 16 | -.070 | - | - | - | - | - | - | 3 | - | 0 |
| 17 | -.190 | - | - | - | - | - | - | 4 | - | 0 |
| 18 | -.480 | - | - | - | - | - | - | 5 | - | 0 |
| 19 | -.020 | 1 | 1 | - | - | - | - | 6 | - | 0 |
| 20 | -.010 | - | - | - | - | - | - | 7 | - | 0 |
| 21 | -.010 | - | - | - | - | - | - | 8 | - | 0 |
| 22 | -.020 | 1 | 1 | - | - | - | - | 9 | - | 0 |
| 23 | -.010 | - | - | - | - | - | - | 10 | - | 0 |
| 24 | -.050 | - | - | - | - | - | - | 11 | - | 0 |

TOTAL NUMBER OF SUBTASKS = 23

RESOURCE REQUIREMENTS
AIRCRAFT, PART AND SUPPORT EQUIPMENT REPAIR DATA

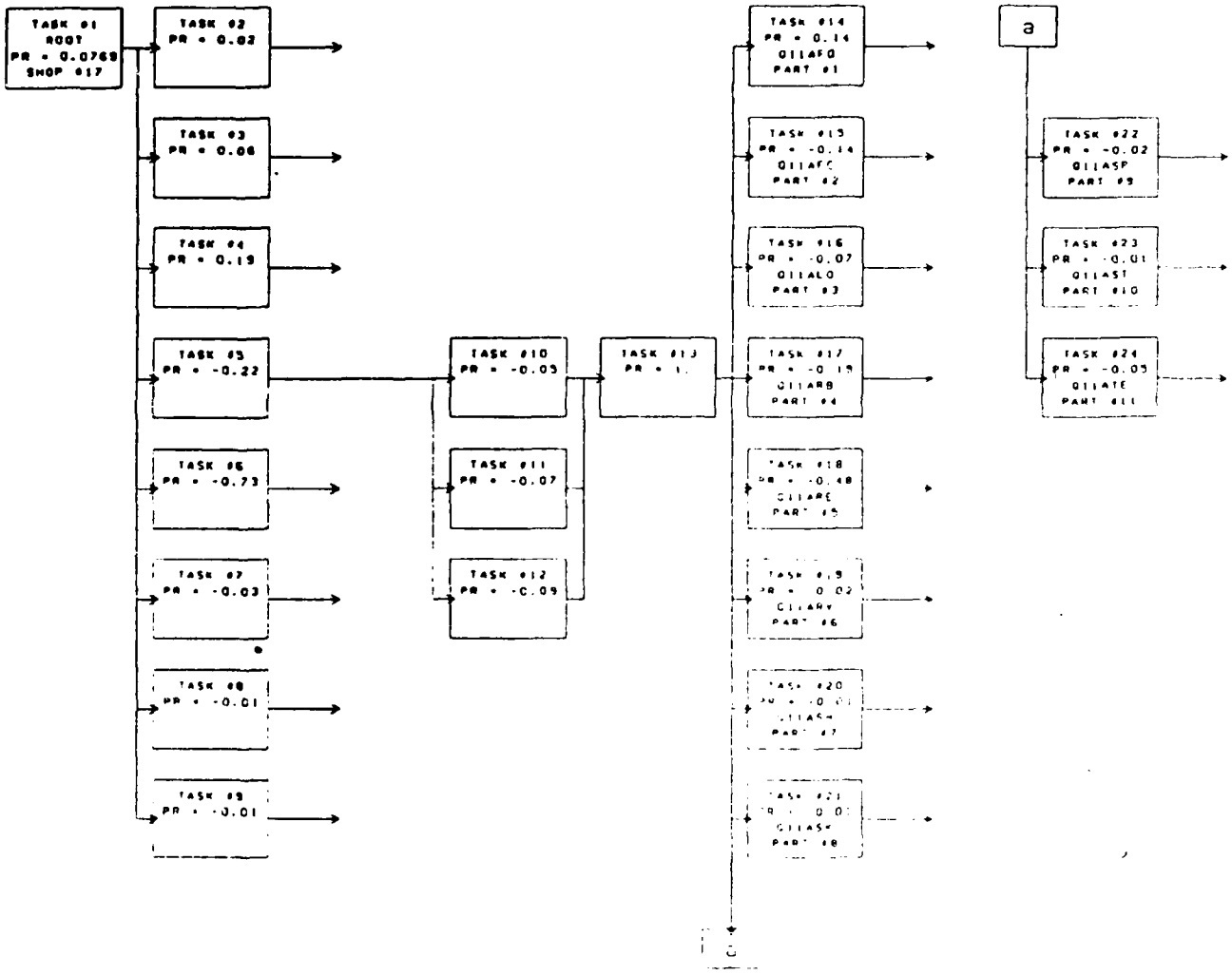


FIGURE 2

III.1.5.2 TASK #25 NETWORK -

11B** -- FUSELAGE, CENTER SECTION

| SUBTASK | PROB | PERSONNEL TEAM 1 TYP | TEAM 1 # | TEAM 2 TYP | TEAM 2 # | AGE #1 | AGE #2 | PART NO. | TIME | DIS |
|---|---|---|---|---|---|---|---|---|---|---|
| 26 | .040 | 21 | 2 | - | - | - | - | - | 96 | 0 |
| 27 | -.380 | 2 | 1 | - | - | - | - | - | 117 | 0 |
| 28 | -.530 | 18 | 1 | - | - | - | - | - | 30 | 0 |
| 29 | -.090 | 1 | 2 | - | - | - | - | - | 66 | 0 |
| 30 | .670 | - | - | - | - | 6 | - | 12 | - | 0 |
| 31 | .400 | - | - | - | - | 6 | - | 13 | - | 0 |

TOTAL NUMBER OF SUBTASKS = 6

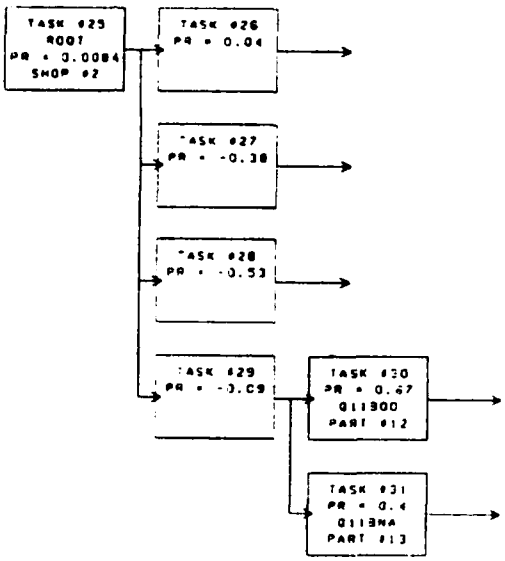


FIGURE 3

III.1.5.3 TASK #32 NETWORK -

11C** -- FUSELAGE, AFT SECTION

| SUBTASK | PROB | PERSONNEL TEAM 1 TYP | TEAM 1 # | TEAM 2 TYP | TEAM 2 # | AGE #1 | AGE #2 | PART NO. | TIME | DIS |
|---|---|---|---|---|---|---|---|---|---|---|
| 33 | .080 | 1 | 1 | - | - | - | - | - | 54 | 0 |
| 34 | .040 | 21 | 2 | - | - | - | - | - | 96 | 0 |
| 35 | -.540 | 18 | 1 | - | - | - | - | - | 30 | 0 |
| 36 | -.320 | 2 | 1 | - | - | - | - | - | 126 | 0 |
| 37 | -.140 | 1 | 1 | - | - | - | - | - | 102 | 0 |
| 38 | .110 | - | - | - | - | 6 | - | 14 | - | 0 |
| 39 | -.360 | - | - | - | - | 6 | - | 15 | - | 0 |
| 40 | -.220 | - | - | - | - | 6 | - | 16 | - | 0 |

TOTAL NUMBER OF SUBTASKS = 8

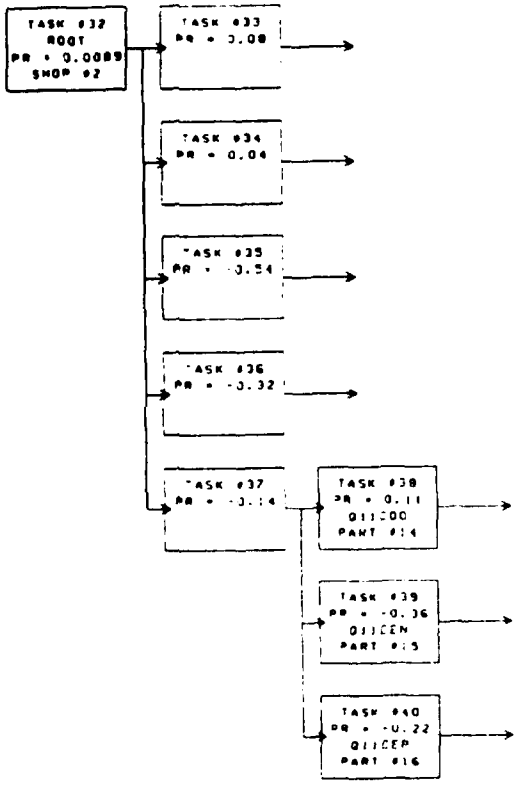


FIGURE 4

Copy available to DTIC does not permit fully legible reproduction

III.1.5.4 TASK #41 NETWORK -

11D** -- WING ASSEMBLY

| SUBTASK | PROB | PERSONNEL TEAM 1 TYP | TEAM 1 # | TEAM 2 TYP | TEAM 2 # | AGE #1 | AGE #2 | PART NO. | TIME | DIS |
|---|---|---|---|---|---|---|---|---|---|---|
| 42 | .010 | 23 | 1 | - | - | - | - | - | 60 | 0 |
| 43 | .020 | 23 | 2 | - | - | - | - | - | 210 | 0 |
| 44 | .060 | 1 | 2 | - | - | - | - | - | 42 | 0 |
| 45 | .060 | 21 | 2 | - | - | - | - | - | 96 | 0 |
| 46 | -.040 | 23 | 2 | - | - | - | - | - | 810 | 0 |
| 47 | -.380 | 18 | 1 | - | - | - | - | - | 36 | 0 |
| 48 | -.520 | 2 | 1 | - | - | - | - | - | 264 | 0 |
| 49 | -.060 | 1 | 2 | - | - | - | - | - | 63 | 0 |
| 50 | .380 | - | - | - | - | 5 | - | 17 | - | 0 |
| 51 | -.050 | - | - | - | - | 5 | - | 18 | - | 0 |
| 52 | -.050 | - | - | - | - | 5 | - | 19 | - | 0 |
| 53 | -.050 | - | - | - | - | 5 | - | 20 | - | 0 |

TOTAL NUMBER OF SUBTASKS = 12

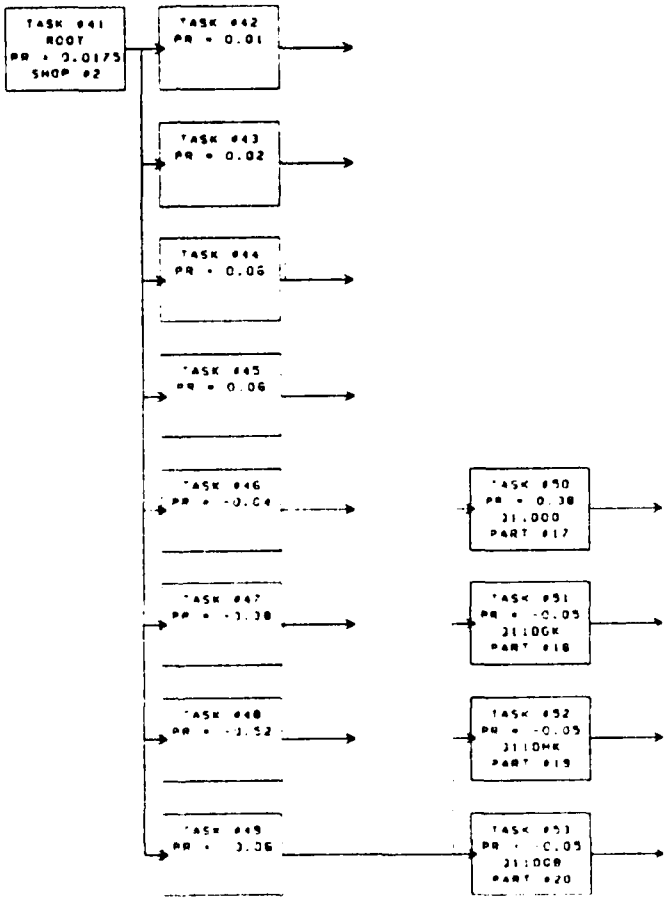


FIGURE 5

III.1.5.5 TASK #54 NETWORK -

11E** -- EMPENNAGE

| SUBTASK | PROB | PERSONNEL TEAM 1 TYP | TEAM 1 # | TEAM 2 TYP | TEAM 2 # | AGE #1 | AGE #2 | PART ND. | TIME | DIS |
|---|---|---|---|---|---|---|---|---|---|---|
| 55 | .030 | 6 | 1 | - | - | - | - | - | 48 | 0 |
| 56 | -.580 | 18 | 1 | - | - | - | - | - | 30 | 0 |
| 57 | -.330 | 2 | 2 | - | - | - | - | - | 204 | 0 |
| 58 | -.090 | 1 | 2 | - | - | - | - | - | 174 | 0 |
| 59 | .220 | - | - | - | - | - | - | 21 | - | 0 |
| 60 | -.130 | - | - | - | - | - | - | 22 | - | 0 |
| 61 | -.400 | - | - | - | - | - | - | 23 | - | 0 |
| 62 | -.130 | - | - | - | - | - | - | 24 | - | 0 |

TOTAL NUMBER OF SUBTASKS = 8

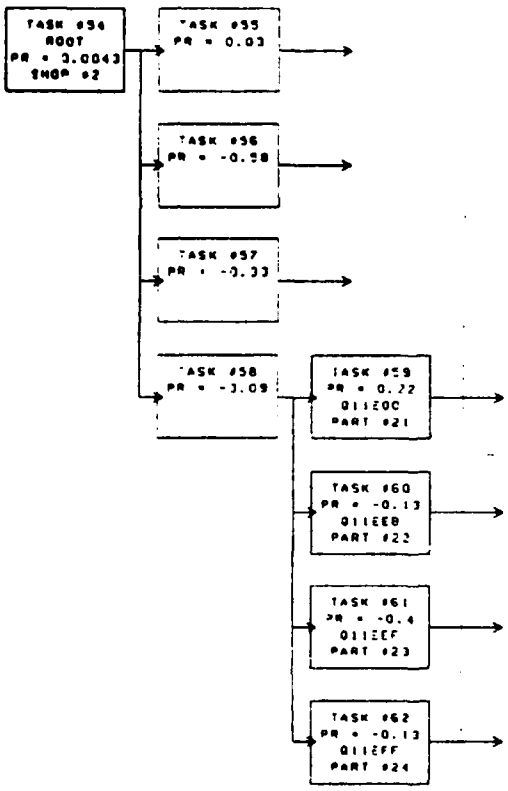


FIGURE 6

III.1.5.6 TASK #63 NETWORK -

11F** -- ENGINE NACELLE, L.H./R.H.

| SUBTASK | PROB | PERSONNEL TEAM 1 TYP | TEAM 1 # | TEAM 2 TYP | TEAM 2 # | AGE #1 | AGE #2 | PART NO. | TIME | DIS |
|---|---|---|---|---|---|---|---|---|---|---|
| 64 | .110 | 1 | 2 | - | - | - | - | - | 228 | 0 |
| 65 | -.610 | 18 | 1 | - | - | - | - | - | 30 | 0 |
| 66 | -.390 | 2 | 1 | - | - | - | - | - | 216 | 0 |
| 67 | -.030 | 2 | 2 | - | - | - | - | - | 522 | 0 |
| 68 | 1.000 | 2 | 1 | - | - | - | - | - | 60 | 0 |
| 69 | -.160 | 1 | 2 | - | - | - | - | - | 66 | 0 |
| 70 | 1.000 | - | - | - | - | - | - | - | - | 0 |
| 71 | .830 | - | - | - | - | 8 | - | 25 | - | 0 |
| 72 | .070 | - | - | - | - | 8 | - | 26 | - | 0 |

TOTAL NUMBER OF SUBTASKS = 9

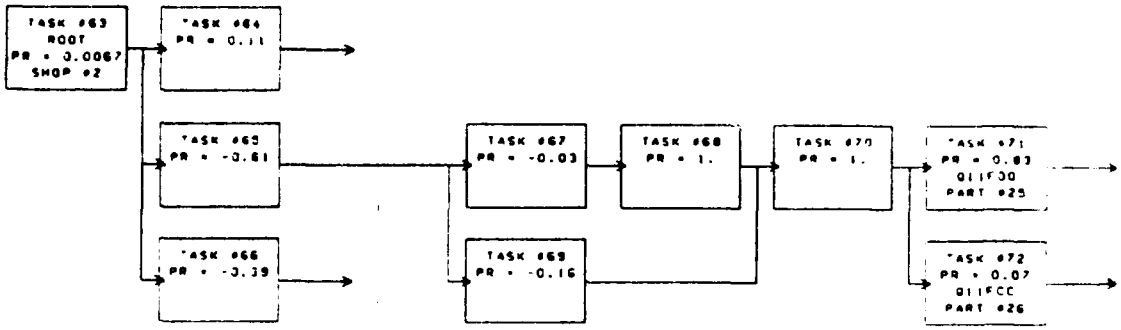


FIGURE 7

III.1.5.7 TASK #73 NETWORK -

12A** -- COCKPIT

| SUBTASK | PROB | PERSONNEL TEAM 1 TYP | TEAM 1 # | TEAM 2 TYP | TEAM 2 # | AGE #1 | AGE #2 | PART NO. | TIME | DIS |
|---|---|---|---|---|---|---|---|---|---|---|
| 74 | .240 | 1 | 1 | - | - | - | - | - | 42 | 0 |
| 75 | .500 | 5 | 2 | - | - | - | - | - | 60 | 0 |
| 76 | -.280 | 2 | 2 | - | - | - | - | - | 150 | 0 |
| 77 | -.560 | 1 | 1 | - | - | - | - | - | 69 | 0 |
| 78 | .130 | - | - | - | - | 5 | - | 27 | - | 0 |
| 79 | -.120 | - | - | - | - | 5 | - | 28 | - | 0 |
| 80 | -.160 | - | - | - | - | 5 | - | 29 | - | 0 |
| 81 | -.160 | - | - | - | - | 5 | - | 30 | - | 0 |

TOTAL NUMBER OF SUBTASKS = 8

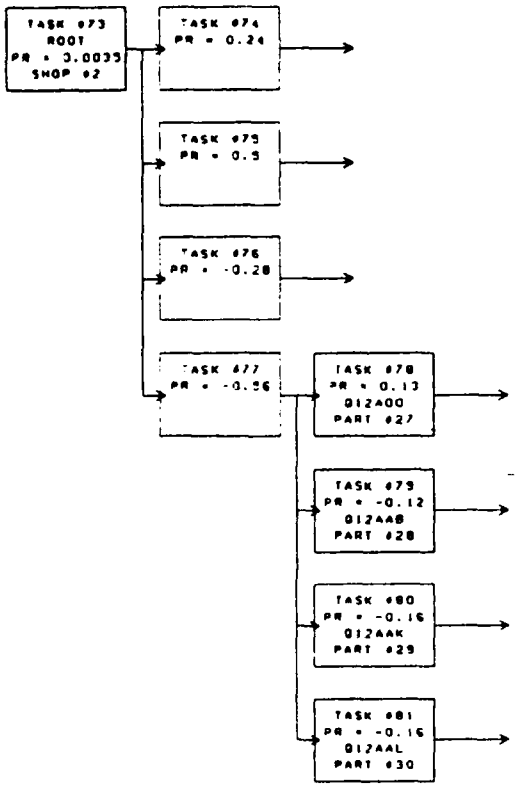


FIGURE 8

III.1.5.8 TASK #82 NETWORK -

12B** -- LADDER, CREW BOARDING

| SUBTASK | PROB | PERSONNEL TEAM 1 TYP | TEAM 1 # | TEAM 2 TYP | TEAM 2 # | AGE #1 | AGE #2 | PART NO. | TIME | DIS |
|---|---|---|---|---|---|---|---|---|---|---|
| 83 | .210 | 1 | 1 | - | - | - | - | - | 54 | 0 |
| 84 | -.370 | 3 | 2 | - | - | - | - | - | 33 | 0 |
| 85 | -.170 | 18 | 1 | - | - | - | - | - | 36 | 0 |
| 86 | -.210 | 2 | 1 | - | - | - | - | - | 162 | 0 |
| 87 | -.250 | 1 | 1 | - | - | - | - | - | 54 | 0 |
| 88 | -.130 | 3 | 2 | - | - | - | - | - | 90 | 0 |
| 89 | -.650 | 1 | 1 | - | - | - | - | - | 84 | 0 |
| 90 | .430 | - | - | - | - | - | - | - | - | 0 |
| 91 | .400 | - | - | - | - | - | - | 31 | - | 0 |

TOTAL NUMBER OF SUBTASKS = 9

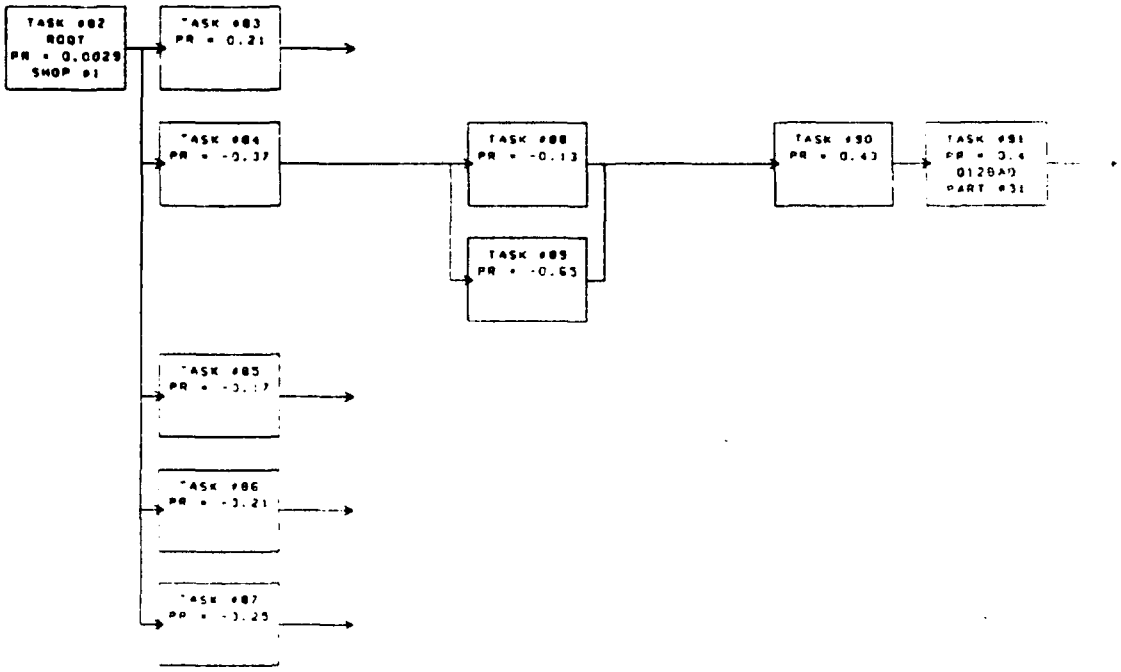


FIGURE 9

III.1.5.9 TASK #92 NETWORK -

12G** -- CANOPY SYSTEM

| SUBTASK | PROB | PERSONNEL TEAM 1 TYP | TEAM 1 # | TEAM 2 TYP | TEAM 2 # | AGE #1 | AGE #2 | PART NO. | TIME | DIS |
|---|---|---|---|---|---|---|---|---|---|---|
| 93 | .330 | 21 | 2 | - | - | - | - | - | 96 | 0 |
| 94 | -.380 | 5 | 2 | - | - | 6 | - | - | 3 | 0 |
| 95 | -.110 | 3 | 1 | - | - | - | - | - | 246 | 0 |
| 96 | -.020 | 18 | 1 | - | - | - | - | - | 24 | 0 |
| 97 | -.020 | 2 | 1 | - | - | - | - | - | 222 | 0 |
| 98 | -.050 | 1 | 2 | - | - | - | - | - | 72 | 0 |
| 99 | -.420 | 21 | 2 | - | - | - | - | - | 216 | 0 |
| 100 | -.250 | 3 | 1 | - | - | - | - | - | 330 | 0 |
| 101 | -.250 | 4 | 2 | - | - | - | - | - | 168 | 0 |
| 102 | -.050 | 1 | 2 | - | - | - | - | - | 114 | 0 |
| 103 | - 400 | 21 | 2 | - | - | - | - | - | 192 | 0 |
| 104 | .850 | - | - | - | - | - | - | - | - | 0 |
| 105 | .260 | - | - | - | - | - | - | 32 | - | 0 |

TOTAL NUMBER OF SUBTASKS = 13

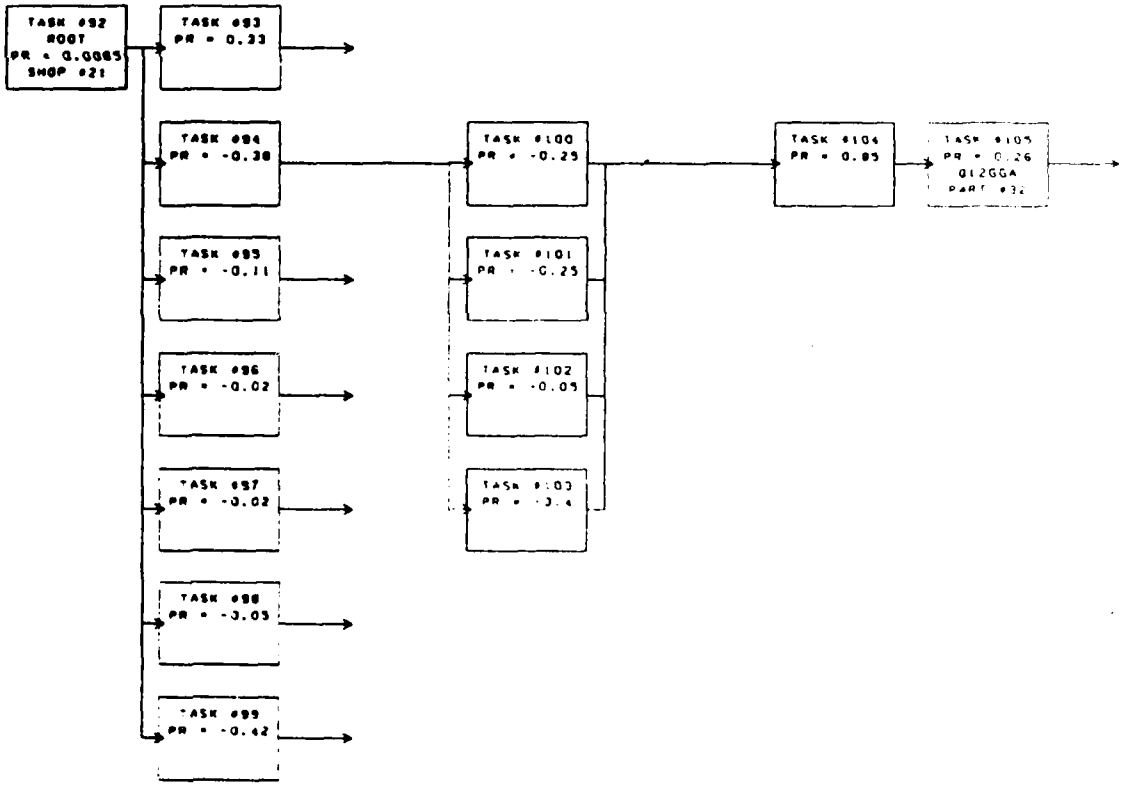


FIGURE 10

III.1.5.10 TASK #106 NETWORK -

12M** --EJECTION SEAT SYSTEM

| SUBTASK | PROB | PERSONNEL TEAM 1 TYP | TEAM 1 # | TEAM 2 TYP | TEAM 2 # | AGE #1 | AGE #2 | PART NO | TIME | DIS |
|---|---|---|---|---|---|---|---|---|---|---|
| 107 | 1.000 | 5 | 2 | - | - | - | - | - | 132 | 0 |
| 108 | 1.000 | 5 | 2 | - | - | 7 | - | - | 231 | 0 |

TOTAL NUMBER OF SUBTASKS = 2

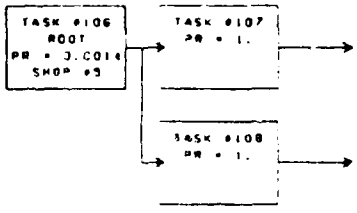


FIGURE 11

III.1.5.11 TASK #109 NETWORK -

130** -- LANDING GEAR

| SUBTASK | PROB | PERSONNEL TEAM 1 TYP | TEAM 1 # | TEAM 2 TYP | TEAM 2 # | AGE #1 | AGE #2 | PART NO | TIME | DIS |
|---|---|---|---|---|---|---|---|---|---|---|
| 730 | -.360 | 11 | 1 | - | - | - | - | 150 | - | 0 |
| 110 | -.360 | 11 | 1 | - | - | - | - | 151 | - | 0 |
| 111 | -.270 | 21 | 1 | - | - | - | - | 34 | - | 0 |

TOTAL NUMBER OF SUBTASKS = 3

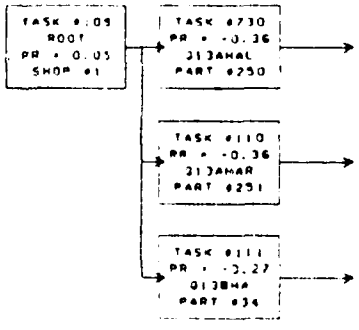


FIGURE 12

III.1.5.12 TASK #112 NETWORK -

13A** -- MAIN LANDING GEAR

| SUBTASK | PROB | PERSONNEL TEAM 1 TYP | TEAM 1 # | TEAM 2 TYP | TEAM 2 # | AGE #1 | AGE #2 | PART NO. | TIME | DIS |
|---|---|---|---|---|---|---|---|---|---|---|
| 113 | .010 | 25 | 3 | - | - | - | - | - | 30 | 0 |
| 114 | -.500 | 18 | 2 | - | - | - | - | - | 3 | 0 |
| 115 | -.130 | 2 | 1 | - | - | - | - | - | 222 | 0 |
| 116 | -.070 | 1 | 1 | - | - | - | - | - | 84 | 0 |
| 117 | -.300 | 21 | 2 | - | - | - | - | - | 96 | 0 |
| 118 | -.060 | 1 | 3 | - | - | 3 | - | - | 120 | 0 |
| 119 | 1.000 | 6 | 2 | - | - | - | - | - | 396 | 0 |
| 120 | -.620 | 1 | 2 | - | - | 3 | - | - | 114 | 0 |
| 121 | -.240 | 21 | 3 | - | - | 3 | - | - | 120 | 0 |
| 122 | 1.000 | - | - | - | - | 14 | - | - | - | 0 |
| 123 | -.270 | - | - | - | - | 14 | - | 35 | - | 0 |
| 124 | -.050 | - | - | - | - | 14 | - | 36 | - | 0 |

TOTAL NUMBER OF SUBTASKS = 12

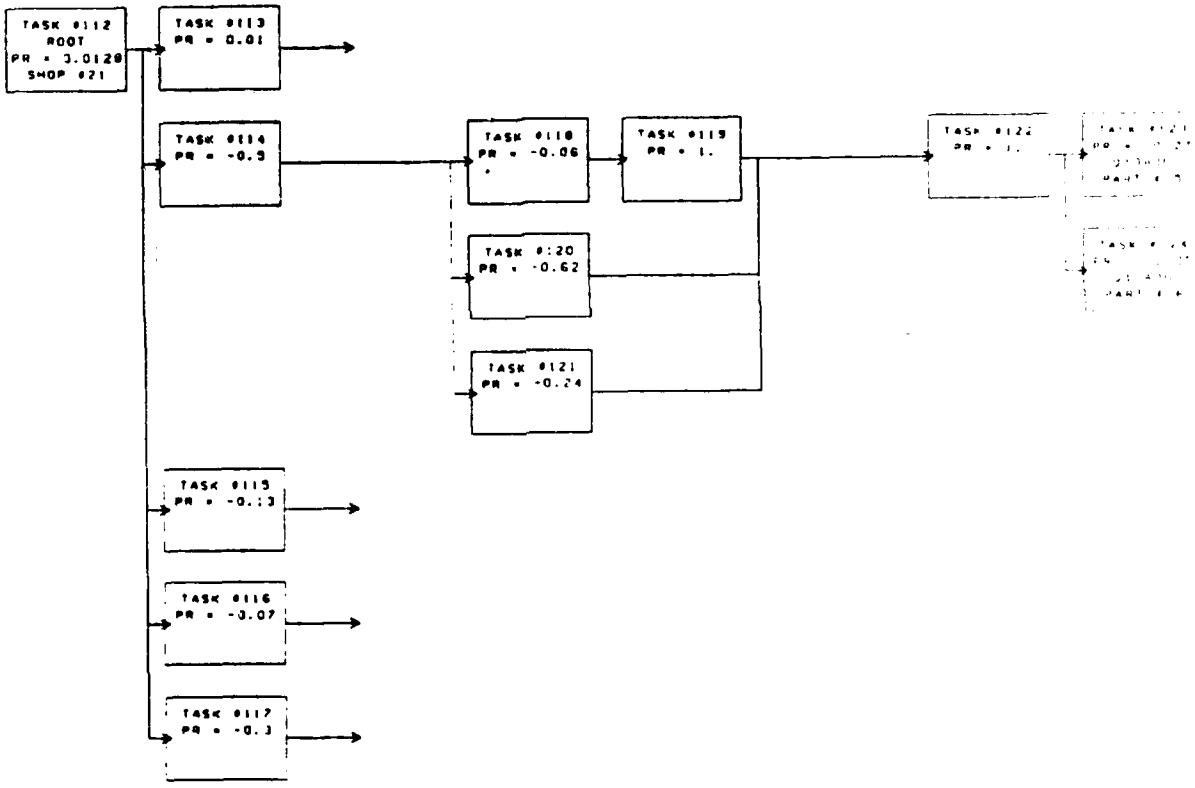


FIGURE 13

III.1.5.13 TASK #125 NETWORK -

13B** -- NOSE LANDING GEAR

| SUBTASK | PROB | PERSONNEL TEAM 1 TYP | TEAM 1 # | TEAM 2 TYP | TEAM 2 # | AGE #1 | AGE #2 | PART NO. | TIME | DIS |
|---|---|---|---|---|---|---|---|---|---|---|
| 126 | .050 | 1 | 2 | - | - | - | - | - | 84 | 0 |
| 127 | -.630 | 6 | 2 | - | - | 14 | - | - | 9 | 0 |
| 128 | -.370 | 21 | 2 | - | - | - | - | - | 96 | 0 |
| 129 | -.080 | 1 | 3 | - | - | - | - | - | 120 | 0 |
| 130 | 1.000 | 6 | 2 | - | - | - | - | - | 336 | 0 |
| 131 | -.750 | 1 | 2 | - | - | - | - | - | 114 | 0 |
| 132 | -.080 | 21 | 2 | - | - | - | - | - | 396 | 0 |
| 133 | .910 | - | - | - | - | - | - | - | - | 0 |
| 134 | .090 | - | - | - | - | - | - | 37 | - | 0 |

TOTAL NUMBER OF SUBTASKS = 9

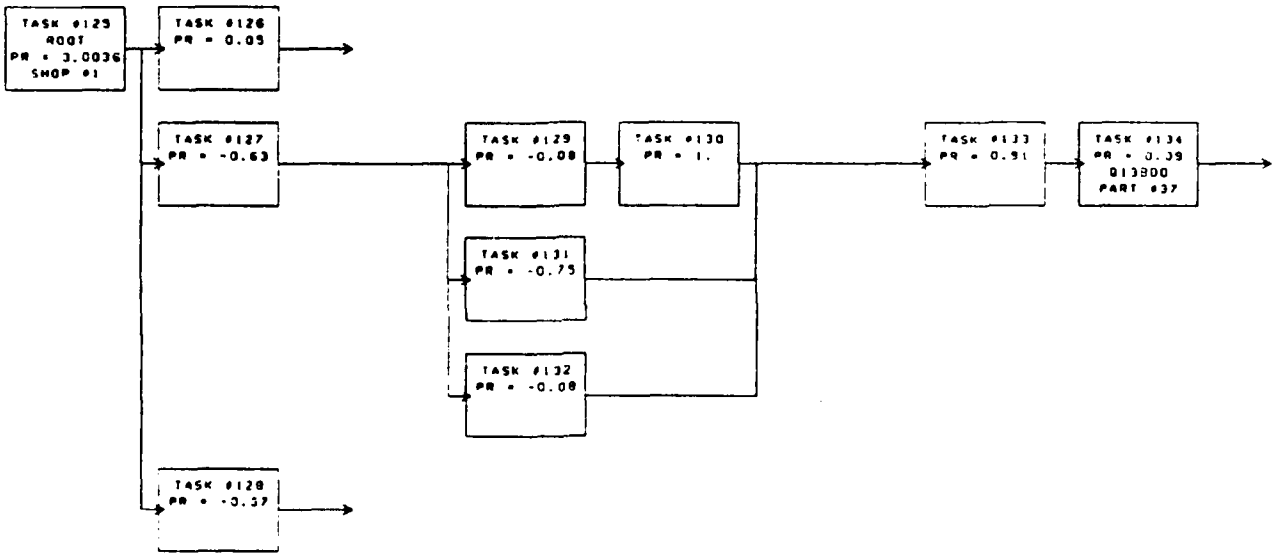


FIGURE 14

III.1.5.14 TASK #135 NETWORK -

13C** -- NOSE WHEEL STEERING SYSTEM

| SUBTASK | PROB | PERSONNEL TEAM 1 TYP | TEAM 1 # | TEAM 2 TYP | TEAM 2 # | AGE #1 | AGE #2 | PART NO | TIME | DIS |
|---|---|---|---|---|---|---|---|---|---|---|
| 136 | .170 | 3 | 2 | - | - | - | - | - | 102 | 0 |
| 137 | -.700 | 6 | 2 | - | - | 14 | - | - | 27 | 0 |
| 138 | -.300 | 3 | 2 | - | - | - | - | - | 342 | 0 |
| 139 | -.290 | 3 | 2 | - | - | - | - | - | 372 | 0 |
| 140 | -.140 | 6 | 1 | - | - | - | - | - | 156 | 0 |
| 141 | -.290 | 1 | 2 | - | - | - | - | - | 84 | 0 |
| 142 | .600 | - | - | - | - | - | - | - | - | 0 |
| 143 | .600 | - | - | - | - | 14 | - | 38 | - | 0 |

TOTAL NUMBER OF SUBTASKS = 8

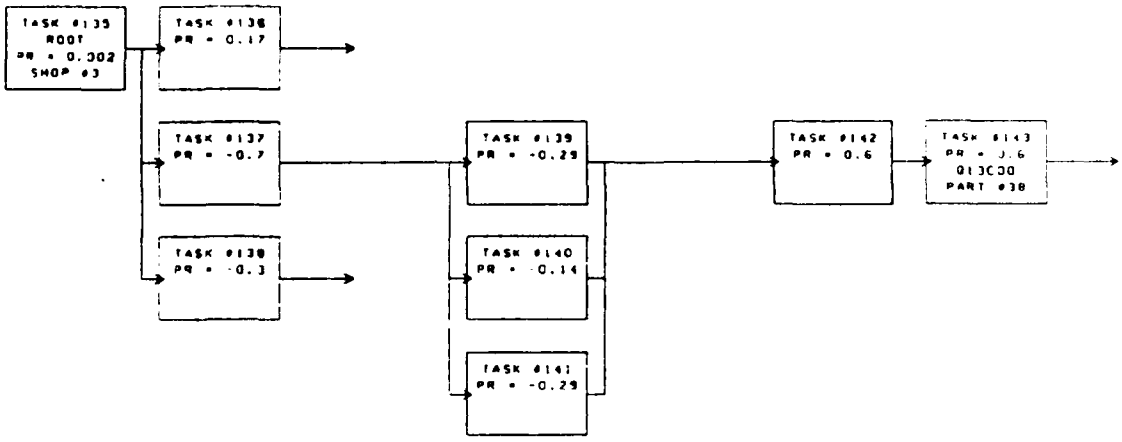


FIGURE 15

III.1.5.15 TASK #144 NETWORK -

13D** -- WHEEL BRAKES

| SUBTASK | PROB | PERSONNEL TEAM 1 TYP | TEAM 1 # | TEAM 2 TYP | TEAM 2 # | AGE #1 | AGE #2 | PART NO | TIME | DIS |
|---|---|---|---|---|---|---|---|---|---|---|
| 145 | .270 | 3 | 2 | - | - | - | - | - | 180 | 0 |
| 146 | .120 | 3 | 1 | - | - | - | - | - | 120 | 0 |
| 147 | .030 | 1 | 2 | - | - | - | - | - | 114 | 0 |
| 148 | -.480 | 3 | 2 | - | - | 14 | 4 | - | 18 | 0 |
| 149 | -.160 | 3 | 1 | - | - | - | - | - | 180 | 0 |
| 150 | -.350 | 6 | 2 | - | - | - | - | - | 96 | 0 |
| 151 | -.790 | 3 | 1 | - | - | - | - | - | 150 | 0 |
| 152 | -.140 | 6 | 2 | - | - | - | - | - | 336 | 0 |
| 153 | 1.000 | - | - | - | - | - | - | - | - | 0 |
| 154 | -.100 | - | - | - | - | 14 | 4 | 39 | - | 0 |
| 155 | -.100 | - | - | - | - | 14 | 4 | 40 | - | 0 |
| 156 | -.350 | - | - | - | - | 14 | 4 | 41 | - | 0 |

TOTAL NUMBER OF SUBTASKS = 12

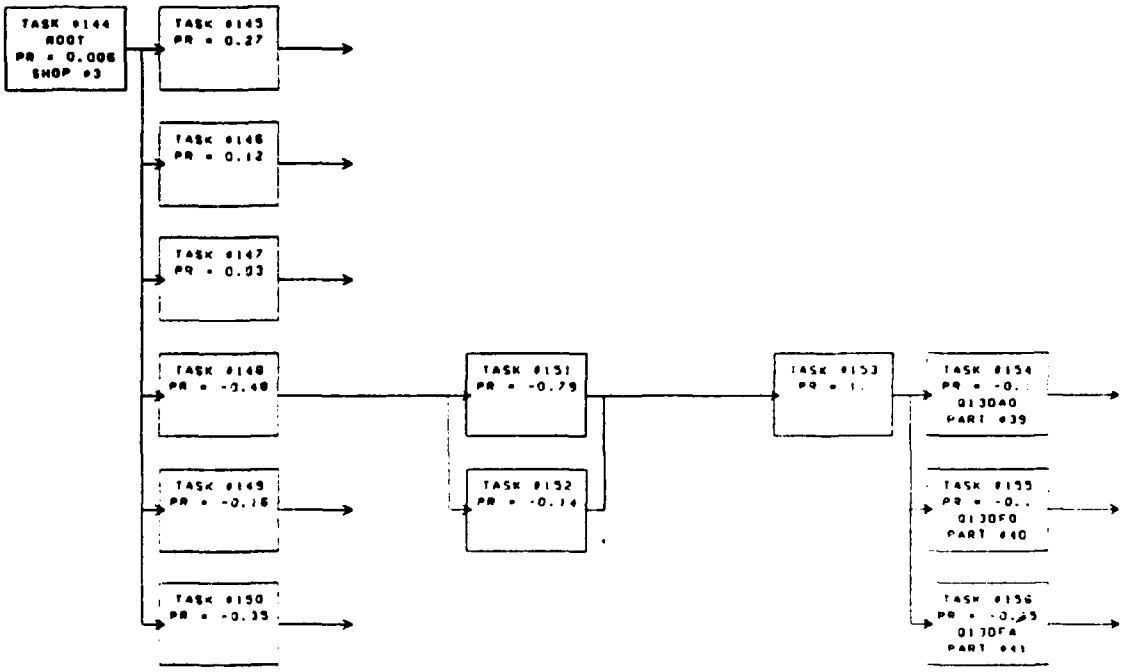


FIGURE 16

III.1.5.16 TASK #157 NETWORK -

13G** -- LANDING GEAR CONTROL SYSTEM

| SUBTASK | PROB | PERSONNEL TEAM 1 TYP | TEAM 1 # | TEAM 2 TYP | TEAM 2 # | AGE #1 | AGE #2 | PART NO. | TIME | DIS |
|---|---|---|---|---|---|---|---|---|---|---|
| 158 | .170 | 3 | 1 | - | - | - | - | - | 102 | 0 |
| 159 | 1.000 | 1 | 2 | - | - | 15 | 4 | - | 18 | 0 |
| 160 | -.620 | 3 | 2 | - | - | - | - | - | 198 | 0 |
| 161 | -.210 | 6 | 1 | - | - | - | - | - | 336 | 0 |
| 162 | .800 | - | - | - | - | - | - | - | - | 0 |
| 163 | -.400 | 3 | 2 | - | - | 15 | 4 | 42 | - | 0 |
| 164 | -.200 | 6 | 1 | - | - | 15 | 4 | 43 | - | 0 |

TOTAL NUMBER OF SUBTASKS = 7

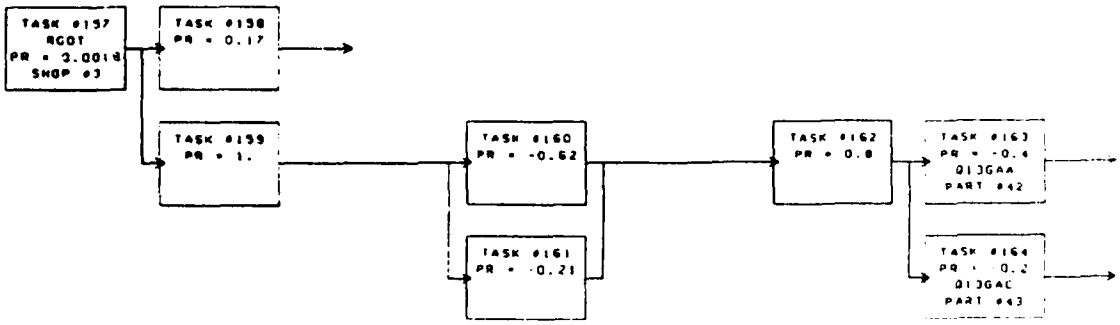


FIGURE 17

III.1.5.17 TASK #165 NETWORK -

13K** -- LANDING GEAR INDICATING SYSTEM

| SUBTASK | PROB | PERSONNEL TEAM 1 TYP | TEAM 1 # | TEAM 2 TYP | TEAM 2 # | AGE #1 | AGE #2 | PART NO. | TIME | DIS |
|---|---|---|---|---|---|---|---|---|---|---|
| 166 | .140 | 9 | 2 | - | - | 11 | - | - | 102 | 0 |
| 167 | 1.000 | 3 | 1 | - | - | 11 | - | - | 276 | 0 |

TOTAL NUMBER OF SUBTASKS = 2

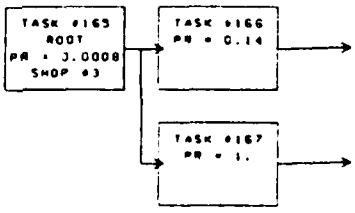


FIGURE 18

III.1.5.18 TASK #168 NETWORK -

13L** -- MISC LANDING GEAR COMPONENTS

| SUBTASK | PROB | PERSONNEL TEAM 1 TYP | TEAM 1 # | TEAM 2 TYP | TEAM 2 # | AGE #1 | AGE #2 | PART NO. | TIME | DIS |
|---|---|---|---|---|---|---|---|---|---|---|
| 169 | -.330 | 18 | 1 | - | - | - | - | - | 18 | 0 |
| 170 | -.670 | 6 | 2 | - | - | - | - | - | 96 | 0 |

TOTAL NUMBER OF SUBTASKS = 2

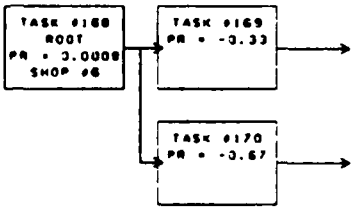


FIGURE 19

III.1.5.19 TASK #171 NETWORK -

14A** -- PILOT CONTROLS

| SUBTASK | PROB | PERSONNEL TEAM 1 TYP | TEAM 1 # | TEAM 2 TYP | TEAM 2 # | AGE #1 | AGE #2 | PART NO. | TIME | DIS |
|---|---|---|---|---|---|---|---|---|---|---|
| 172 | .090 | 3 | 1 | - | - | - | - | - | 72 | 0 |
| 173 | .360 | 21 | 1 | - | - | - | - | - | 144 | 0 |
| 174 | -.180 | 3 | 2 | - | - | - | - | - | 222 | 0 |
| 175 | -.640 | 3 | 1 | - | - | - | - | - | 123 | 0 |
| 176 | -.090 | 18 | 1 | - | - | - | - | - | 60 | 0 |
| 177 | -.090 | 21 | 1 | - | - | - | - | - | 156 | 0 |
| 178 | .140 | - | - | - | - | - | - | 44 | - | 0 |

TOTAL NUMBER OF SUBTASKS = 7

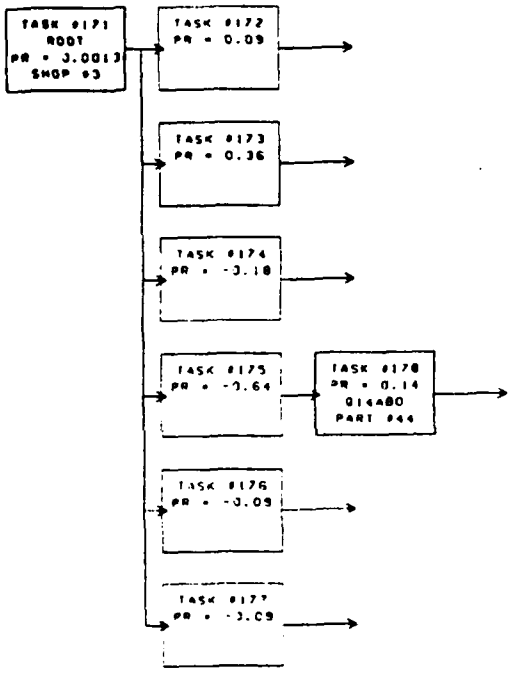


FIGURE 20

III.1.5.20 TASK #179 NETWORK -

14C** -- ROLL CONTROL SYSTEM

| SUBTASK | PROB | PERSONNEL TEAM 1 TYP | TEAM 1 # | TEAM 2 TYP | TEAM 2 # | AGE #1 | AGE #2 | PART NO. | TIME | DIS |
|---|---|---|---|---|---|---|---|---|---|---|
| 180 | .610 | 21 | 3 | - | - | - | - | - | 270 | 0 |
| 181 | .260 | 21 | 3 | - | - | - | - | - | 756 | 0 |
| 182 | -.470 | 3 | 2 | - | - | 11 | - | - | 15 | 0 |
| 183 | -.030 | 6 | 2 | - | - | - | - | - | 66 | 0 |
| 184 | -.030 | 2 | 1 | - | - | - | - | - | 252 | 0 |
| 185 | -.470 | 21 | 2 | - | - | - | - | - | 132 | 0 |
| 186 | -.340 | 6 | 2 | - | - | - | - | - | 276 | 0 |
| 187 | -.590 | 21 | 2 | - | - | - | - | - | 96 | 0 |
| 188 | .920 | - | - | - | - | - | - | - | - | 0 |
| 189 | -.470 | - | - | - | - | 7 | - | 45 | - | 0 |
| 190 | -.070 | - | - | - | - | 7 | - | 46 | - | 0 |
| 191 | -.200 | - | - | - | - | 7 | - | 47 | - | 0 |

TOTAL NUMBER OF SUBTASKS = 12

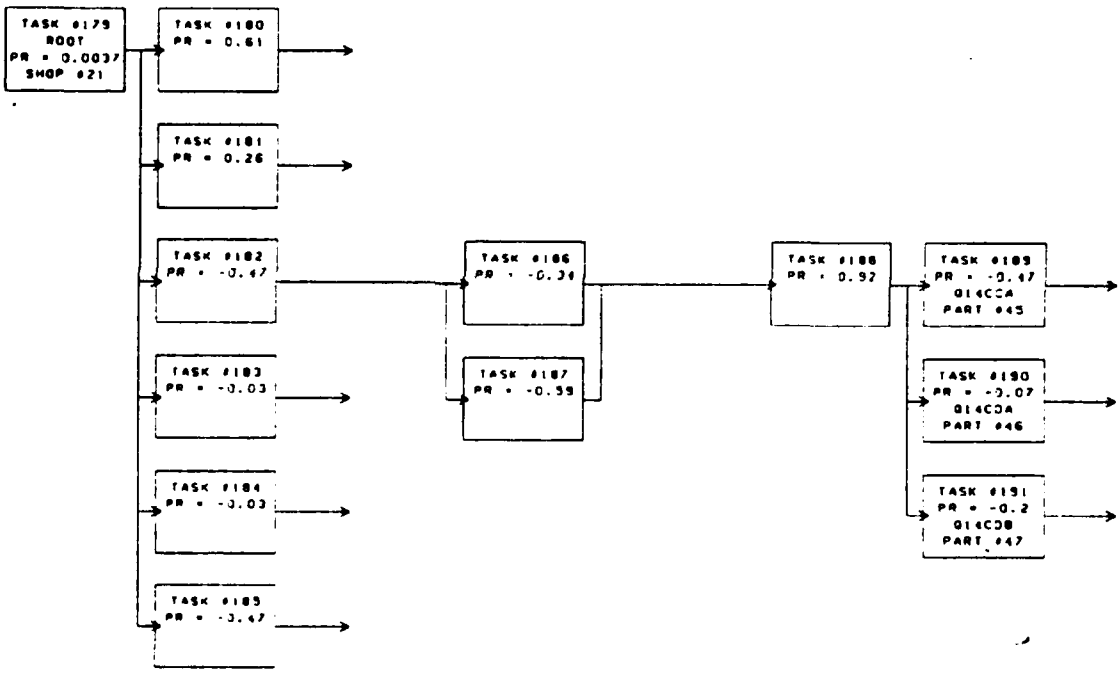


FIGURE 21

III.1.5.21 TASK #192 NETWORK -

14E** -- PITCH CONTROL SYSTEM

| SUBTASK | PROB | PERSONNEL TEAM 1 TYP | TEAM 1 # | TEAM 2 TYP | TEAM 2 # | AGE #1 | AGE #2 | PART NO. | TIME | DIS |
|---|---|---|---|---|---|---|---|---|---|---|
| 193 | .780 | 21 | 2 | - | - | - | - | - | 96 | 0 |
| 194 | -.620 | 3 | 1 | - | - | 11 | - | - | 9 | 0 |
| 195 | -.030 | 6 | 1 | - | - | - | - | - | 66 | 0 |
| 196 | -.030 | 2 | 1 | - | - | - | - | - | 522 | 0 |
| 197 | -.320 | 21 | 2 | - | - | - | - | - | 156 | 0 |
| 198 | -.230 | 6 | 1 | - | - | - | - | - | 246 | 0 |
| 199 | -.030 | 1 | 1 | - | - | - | - | - | 114 | 0 |
| 200 | -.690 | 21 | 2 | - | - | - | - | - | 132 | 0 |
| 201 | 1.000 | - | - | - | - | - | - | - | - | 0 |
| 202 | .080 | - | - | - | - | 7 | - | 48 | - | 0 |
| 203 | -.140 | - | - | - | - | 7 | - | 49 | - | 0 |
| 204 | -.050 | - | - | - | - | 7 | - | 50 | - | 0 |
| 205 | -.050 | - | - | - | - | 7 | - | 51 | - | 0 |
| 206 | -.280 | 6 | 1 | - | - | 7 | - | 52 | - | 0 |
| 207 | -.350 | 21 | 2 | - | - | 7 | - | 53 | - | 0 |
| 208 | -.070 | 21 | 2 | - | - | 7 | - | 54 | - | 0 |

TOTAL NUMBER OF SUBTASKS = 16

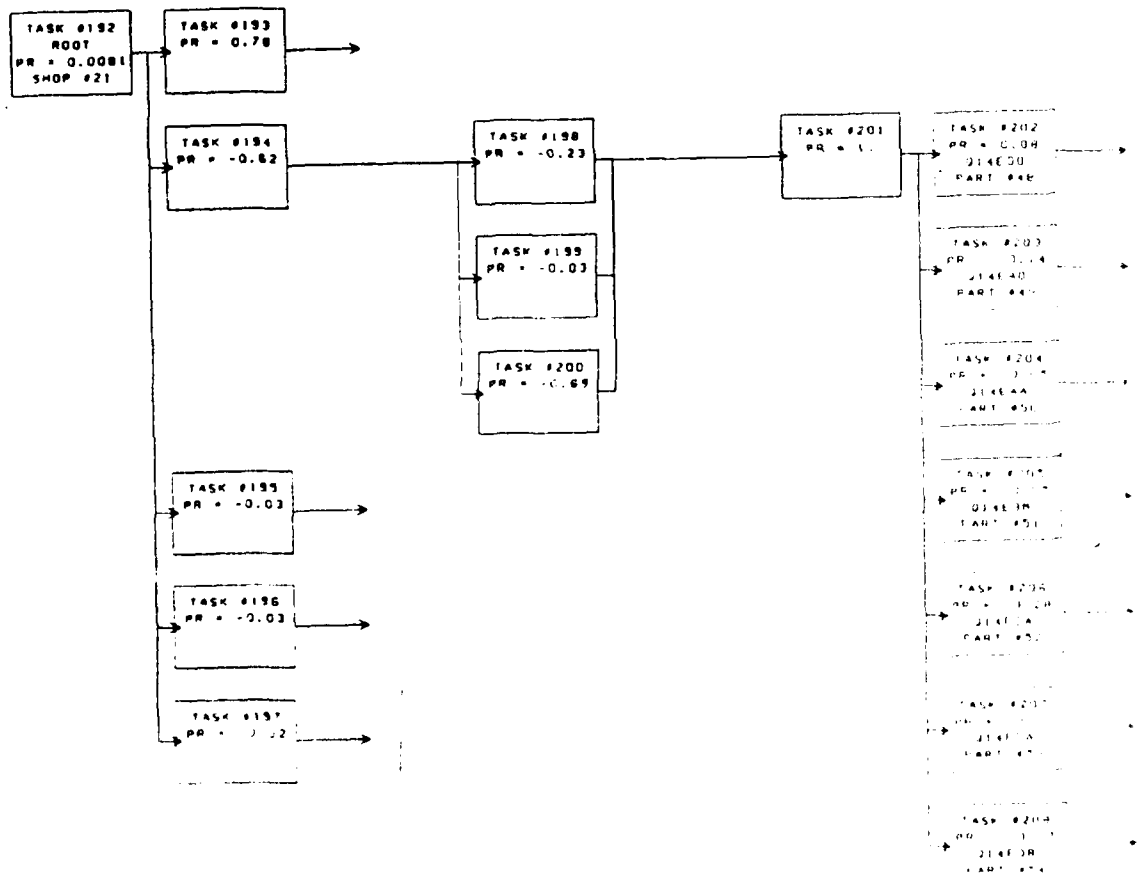


FIGURE 22

III.1.5.22 TASK #209 NETWORK -

14G** -- YAW CONTROL SYSTEM

| SUBTASK | PROB | PERSONNEL TEAM 1 TYP | TEAM 1 # | TEAM 2 TYP | TEAM 2 # | AGE #1 | AGE #2 | PART NO. | TIME | DIS |
|---|---|---|---|---|---|---|---|---|---|---|
| 210 | -.350 | 2 | 1 | - | - | 11 | - | - | 45 | 0 |
| 211 | -.650 | 21 | 2 | - | - | - | - | - | 180 | 0 |
| 212 | -.370 | 6 | 1 | - | - | - | - | - | 126 | 0 |
| 213 | -.180 | 1 | 1 | - | - | - | - | - | 84 | 0 |
| 214 | 1.000 | - | - | - | - | - | - | - | - | 0 |
| 215 | -.630 | - | - | - | - | - | - | 55 | - | 0 |
| 216 | -.250 | - | - | - | - | - | - | 56 | - | 0 |

TOTAL NUMBER OF SUBTASKS = 7

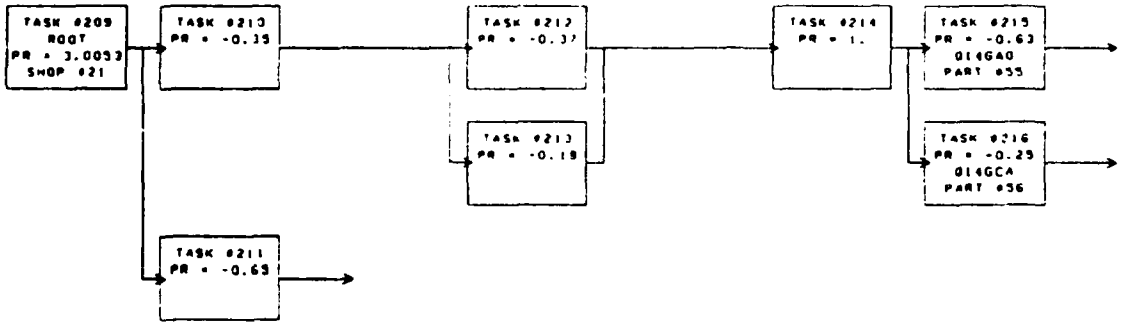


FIGURE 23

III.1.5.23 TASK #217 NETWORK -

14K** -- TRAILING EDGE FLAP SYSTEM

| SUBTASK | PROB | PERSONNEL TEAM 1 TYP | TEAM 1 # | TEAM 2 TYP | TEAM 2 # | AGE #1 | AGE #2 | PART NO. | TIME | DIS |
|---|---|---|---|---|---|---|---|---|---|---|
| 218 | .040 | 1 | 1 | - | - | - | - | - | 54 | 0 |
| 219 | -.400 | 3 | 1 | - | - | 4 | - | - | 42 | 0 |
| 220 | -.340 | 3 | 2 | - | - | - | - | - | 60 | 0 |
| 221 | -.140 | 6 | 2 | - | - | - | - | - | 162 | 0 |
| 222 | -.050 | 18 | 1 | - | - | - | - | - | 120 | 0 |
| 223 | -.180 | 2 | 2 | - | - | - | - | - | 114 | 0 |
| 224 | -.090 | 1 | 2 | - | - | - | - | - | 84 | 0 |
| 225 | -.140 | 21 | 2 | - | - | - | - | - | 174 | 0 |
| 226 | .330 | 3 | 1 | - | - | - | - | - | 192 | 0 |
| 227 | -.330 | 6 | 2 | - | - | - | - | - | 120 | 0 |
| 228 | -.110 | 1 | 2 | - | - | - | - | - | 144 | 0 |
| 229 | -.220 | 21 | 2 | - | - | - | - | - | 216 | 0 |
| 230 | 1.000 | - | - | - | - | - | - | - | - | 0 |
| 231 | -.270 | - | - | - | - | 4 | - | 57 | - | 0 |
| 232 | -.270 | - | - | - | - | 4 | - | 58 | - | 0 |
| 233 | -.360 | - | - | - | - | 4 | - | 59 | - | 0 |

TOTAL NUMBER OF SUBTASKS = 16

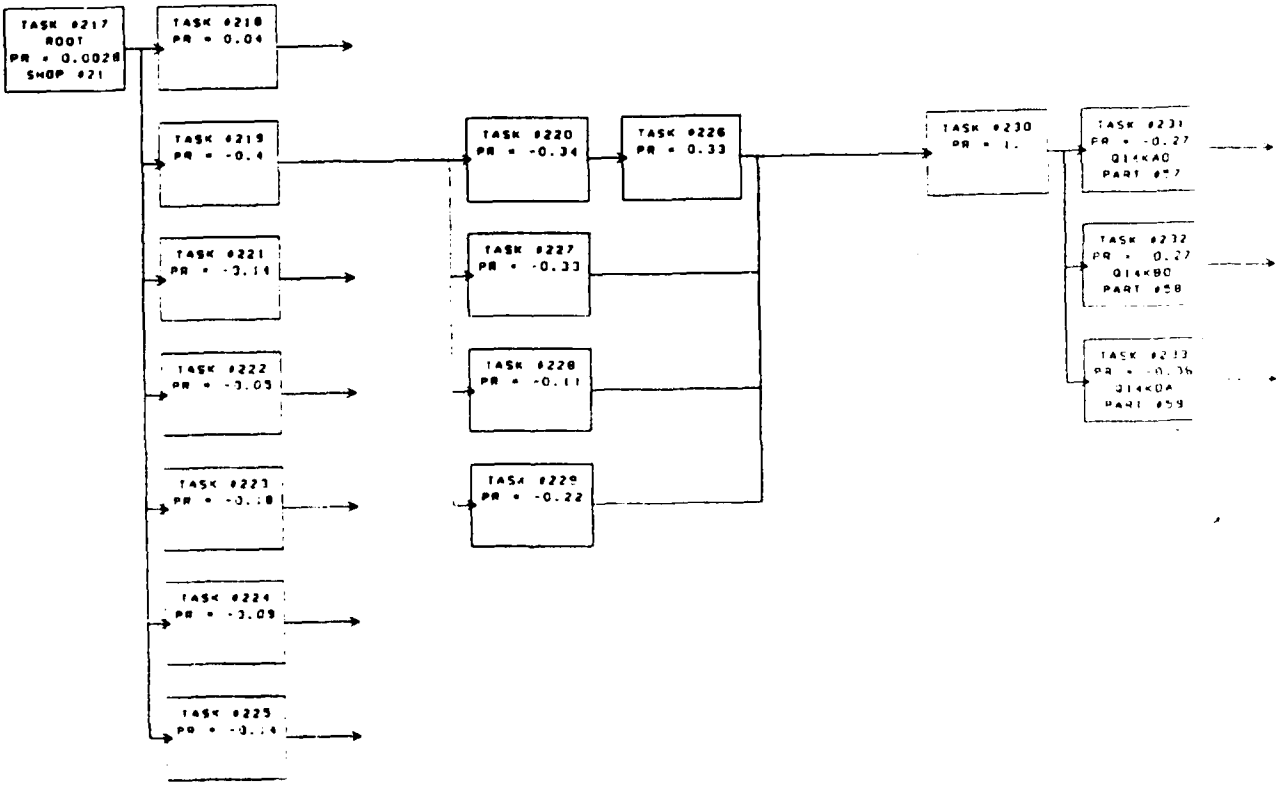


FIGURE 24

III.1.5.24 TASK #234 NETWORK -

14L** -- SPEED BRAKE SYSTEM

| SUBTASK | PROB | PERSONNEL TEAM 1 TYP | TEAM 1 # | TEAM 2 TYP | TEAM 2 # | AGE #1 | AGE #2 | PART NO. | TIME | DIS |
|---|---|---|---|---|---|---|---|---|---|---|
| 235 | .170 | 6 | 2 | - | - | - | - | - | 276 | C |
| 236 | .170 | 6 | 2 | - | - | - | - | - | 210 | O |
| 237 | -.200 | 3 | 2 | - | - | - | - | - | 162 | O |
| 238 | -.200 | 6 | 2 | - | - | - | - | - | 126 | O |
| 239 | -.200 | 3 | 1 | - | - | - | - | - | 132 | O |
| 240 | -.400 | 21 | 2 | - | - | - | - | - | 336 | O |

TOTAL NUMBER OF SUBTASKS = 6

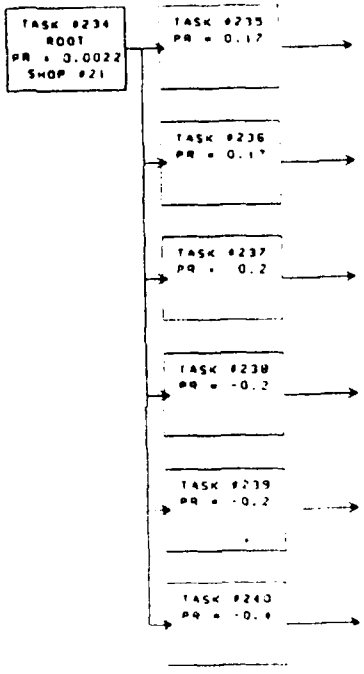


FIGURE 25

III.1.5.25 TASK #241 NETWORK -

14N** -- LEADING EDGE SLAT SYSTEM

| SUBTASK | PROB | PERSONNEL TEAM 1 TYP | TEAM 1 # | TEAM 2 TYP | TEAM 2 # | AGE #1 | AGE #2 | PART NO. | TIME | DIS |
|---|---|---|---|---|---|---|---|---|---|---|
| 242 | .020 | 9 | 2 | - | - | - | - | - | 30 | 0 |
| 243 | .040 | 1 | 2 | - | - | - | - | - | 72 | 0 |
| 244 | .720 | 21 | 2 | - | - | - | - | - | 72 | 0 |
| 245 | -.570 | 9 | 2 | - | - | 4 | - | - | 81 | 0 |
| 246 | -.070 | 6 | 1 | - | - | - | - | - | 126 | 0 |
| 247 | -.070 | 2 | 1 | - | - | - | - | - | 162 | 0 |
| 248 | -.020 | 1 | 1 | - | - | - | - | - | 54 | 0 |
| 249 | -.020 | 21 | 2 | - | - | - | - | - | 96 | 0 |
| 250 | -.250 | 18 | 1 | - | - | - | - | - | 48 | 0 |
| 251 | -.390 | 6 | 1 | - | - | - | - | - | 156 | 0 |
| 252 | -.040 | 1 | 1 | - | - | - | - | - | 84 | 0 |
| 253 | -.220 | 21 | 2 | - | - | - | - | - | 156 | 0 |
| 254 | 1.000 | - | - | - | - | - | - | - | - | 0 |
| 255 | -.300 | 21 | 2 | - | - | 4 | - | 60 | - | 0 |
| 256 | -.390 | - | - | - | - | 4 | - | 61 | - | 0 |
| 257 | -.170 | - | - | - | - | 4 | - | 62 | - | 0 |

TOTAL NUMBER OF SUBTASKS = 16

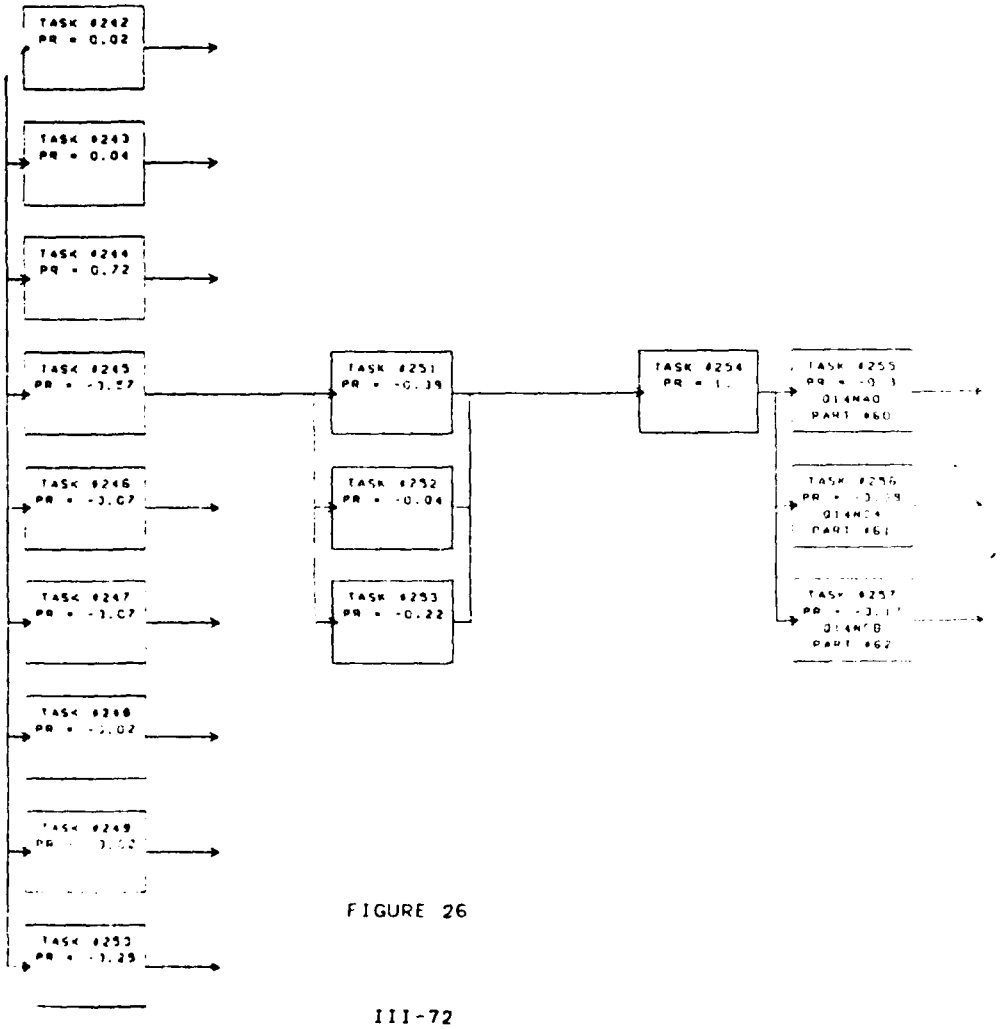


FIGURE 26

AD-A169 062 TSAR (THEATER SIMULATION OF AIRBASE RESOURCES) DATABASE 2/5
DICTIONARY A-10 WITH INTERMEDIATE MAINTENANCE(U)
ORLANDO TECHNOLOGY INC SHALIMAR FL D ROBINSON ET AL.
UNCLASSIFIED 25 APR 86 F/G 1/3 NL

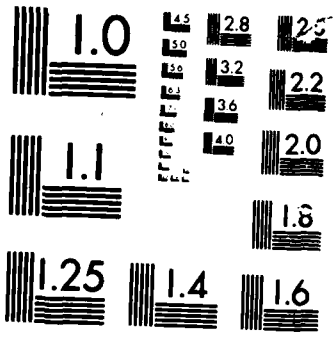


MICROCOPY CHART

III.1.5.26 TASK #258 NETWORK -

230** --TURBO FAN POWER PLANT SYSTEM

| SUBTASK | PROB | PERSONNEL TEAM 1 TYP | TEAM 1 # | TEAM 2 TYP | TEAM 2 # | AGE #1 | AGE #2 | PART NO | TIME | DIS |
|---|---|---|---|---|---|---|---|---|---|---|
| 259 | -.120 | 7 | 2 | - | - | - | - | - | 249 | 0 |
| 260 | .620 | 7 | 5 | - | - | - | - | - | 300 | 0 |
| 261 | 1.000 | 7 | 5 | - | - | 8 | 10 | 63 | - | 0 |
| 262 | .010 | 7 | 3 | - | - | - | - | - | 180 | 0 |
| 263 | -.020 | 7 | 4 | - | - | - | - | - | 960 | 0 |
| 264 | -.060 | 7 | 2 | - | - | - | - | - | 450 | 0 |
| 265 | -.010 | 18 | 1 | - | - | - | - | - | 60 | 0 |
| 266 | .110 | 5 | 2 | - | - | - | - | - | 60 | 0 |
| 267 | .060 | 7 | 2 | - | - | - | - | - | 210 | 0 |
| 268 | -.400 | 9 | 1 | - | - | - | - | - | - | 0 |
| 269 | -.660 | 7 | 2 | - | - | 2 | - | - | 510 | 0 |
| 270 | -.020 | 1 | 2 | - | - | - | - | - | 450 | 0 |
| 271 | -.070 | 9 | 1 | - | - | - | - | - | 150 | 0 |
| 272 | -.070 | 21 | 2 | - | - | - | - | - | 60 | 0 |
| 273 | -.300 | 7 | 2 | - | - | 2 | - | - | 300 | 0 |
| 274 | -.080 | 19 | 1 | - | - | - | - | - | 117 | 0 |
| 275 | -.060 | 2 | 1 | - | - | - | - | - | 60 | 0 |
| 276 | -.010 | 1 | 1 | - | - | - | - | - | 30 | 0 |
| 277 | -.010 | 3 | 1 | - | - | - | - | - | 60 | 0 |
| 278 | -.160 | 21 | 1 | - | - | - | - | - | 30 | 0 |
| 279 | 1.000 | - | - | - | - | - | - | - | - | 0 |
| 280 | -.110 | - | - | - | - | 9 | - | 64 | - | 0 |
| 281 | -.010 | - | - | - | - | 9 | - | 65 | - | 0 |
| 282 | -.020 | - | - | - | - | 9 | - | 66 | - | 0 |
| 283 | -.010 | - | - | - | - | 9 | - | 67 | - | 0 |
| 284 | -.010 | - | - | - | - | 9 | - | 68 | - | 0 |
| 285 | -.140 | - | - | - | - | 9 | - | 69 | - | 0 |
| 286 | -.030 | - | - | - | - | 9 | - | 70 | - | 0 |
| 287 | -.100 | - | - | - | - | 9 | - | 71 | - | 0 |
| 288 | -.040 | - | - | - | - | 9 | - | 72 | - | 0 |
| 289 | -.010 | - | - | - | - | 9 | - | 73 | - | 0 |
| 290 | -.010 | - | - | - | - | 9 | - | 74 | - | 0 |
| 291 | -.020 | - | - | - | - | 9 | - | 75 | - | 0 |
| 292 | -.010 | - | - | - | - | 9 | - | 76 | - | 0 |
| 293 | -.030 | - | - | - | - | 9 | - | 77 | - | 0 |
| 294 | -.020 | - | - | - | - | 9 | - | 78 | - | 0 |
| 295 | -.050 | - | - | - | - | 9 | - | 79 | - | 0 |
| 296 | -.010 | - | - | - | - | 9 | - | 80 | - | 0 |
| 297 | -.120 | - | - | - | - | 9 | - | 81 | - | 0 |
| 298 | -.170 | - | - | - | - | 9 | - | 82 | - | 0 |
| 299 | -.010 | - | - | - | - | 9 | - | 83 | - | 0 |
| 300 | -.070 | - | - | - | - | 9 | - | 84 | - | 0 |

TOTAL NUMBER OF SUBTASKS = 42

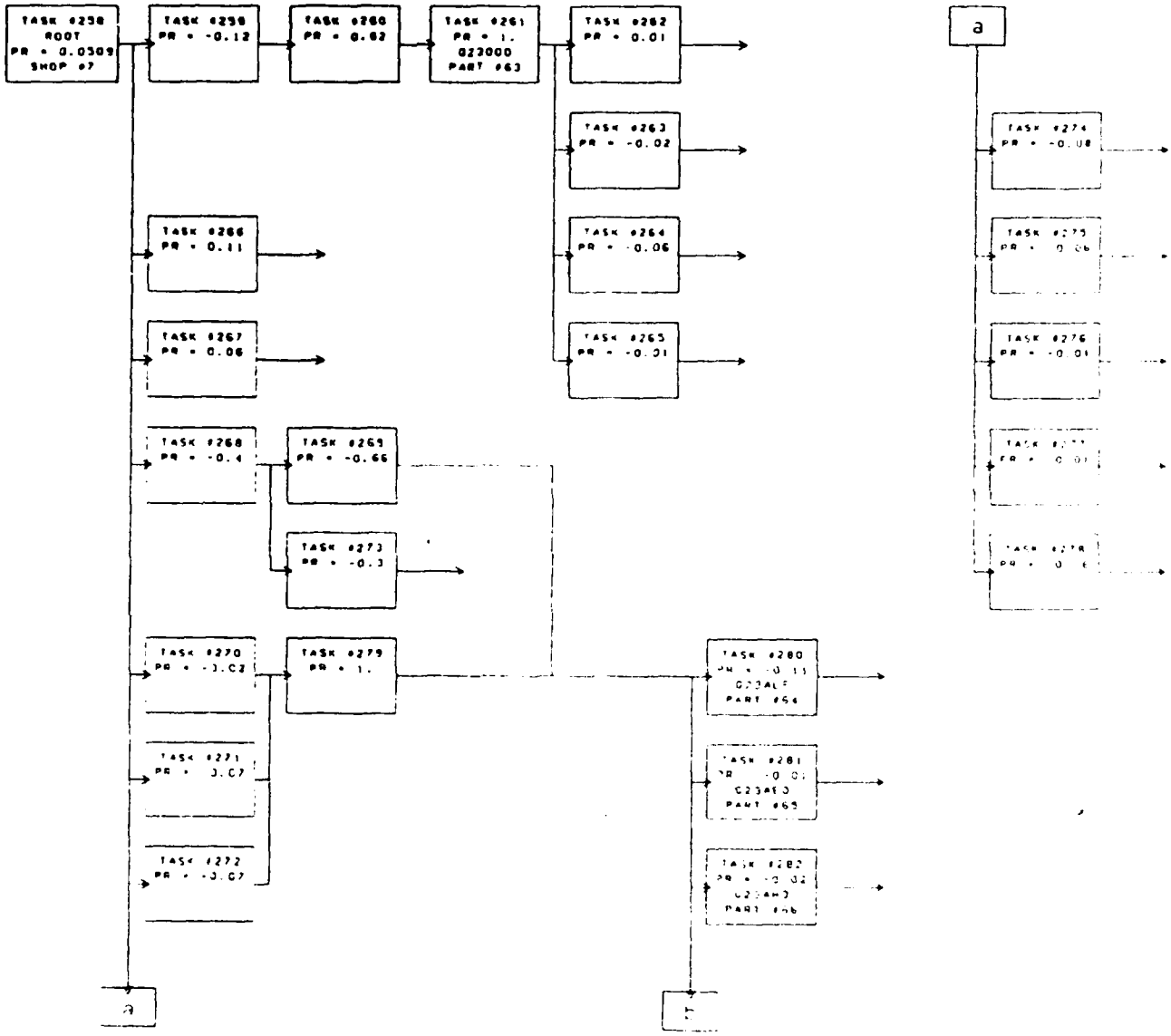
TASK #258
ROOT
PR = 0.0509
SHOP #7
TASK #259
PR = -0.12
TASK #260
PR = 0.02
TASK #261
PR = 1.
023000
PART #63
TASK #262
PR = 0.01
TASK #263
PR = -0.02
TASK #264
PR = -0.06
TASK #265
PR = -0.01
TASK #266
PR = 0.11
TASK #267
PR = 0.06
TASK #268
PR = -0.4
TASK #269
PR = -0.66
TASK #273
PR = -0.3
TASK #270
PR = -3.02
TASK #279
PR = 1.
TASK #271
PR = 3.07
TASK #272
PR = -3.07
TASK #280
PART #64
TASK #281
PART #65
TASK #282
a
a
TASK #274
PR = -0.08
TASK #275
PR = 0.06
TASK #276
PR = -0.01

FIGURE 27a

RESOURCE REQUIREMENTS
AIRCRAFT, PART AND SUPPORT EQUIPMENT REPAIR DATA

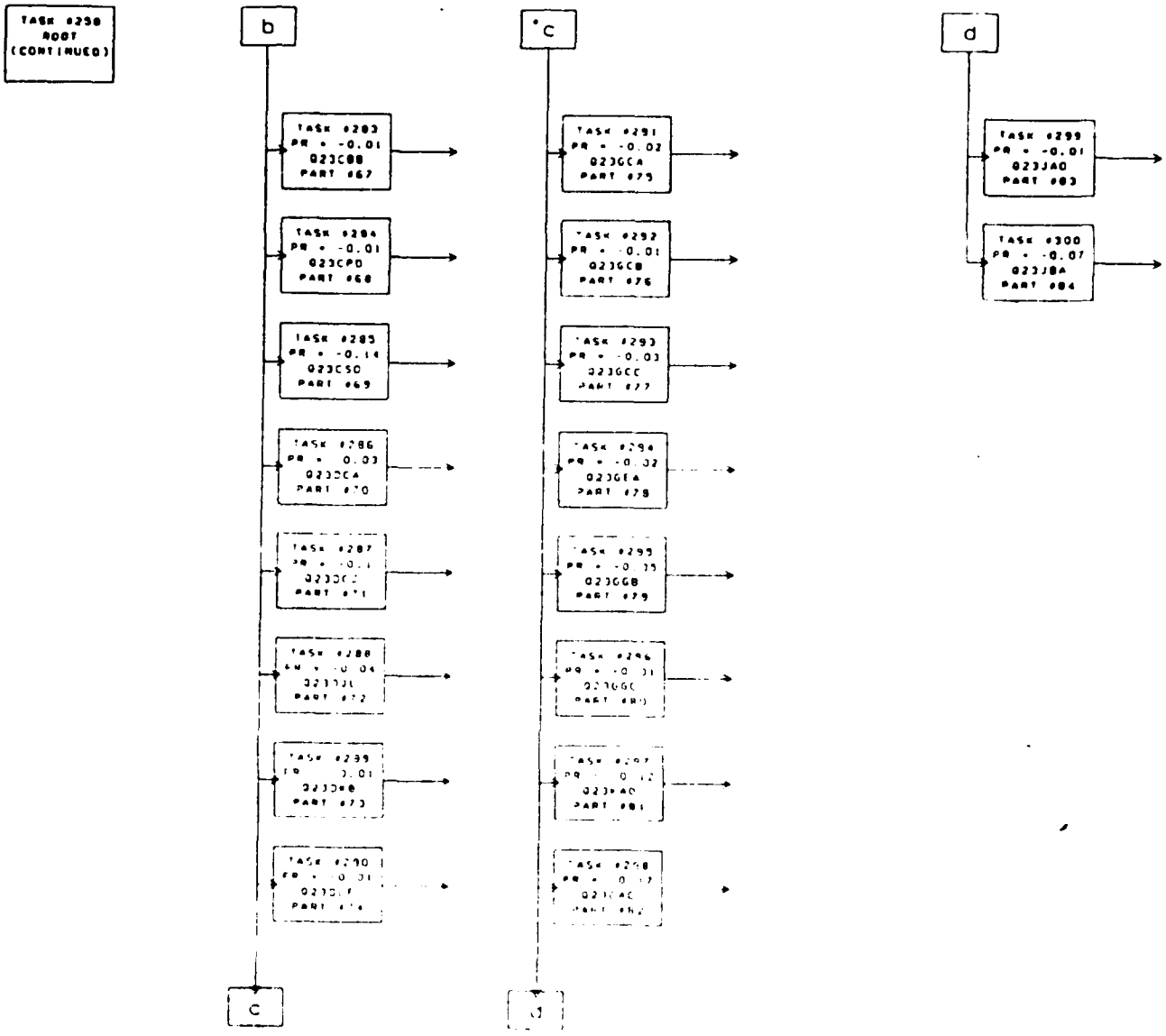


FIGURE 27b

III.1.5.27 TASK #301 NETWORK -

24A** --AUXILIARY POWER UNIT, GTCP36-50

| SUBTASK | PROB | PERSONNEL TEAM 1 TYP | TEAM 1 # | TEAM 2 TYP | TEAM 2 # | AGE #1 | AGE #2 | PART NO. | TIME | DIS |
|---|---|---|---|---|---|---|---|---|---|---|
| 302 | .570 | 7 | 2 | - | - | - | - | - | 120 | 0 |
| 303 | -.930 | 7 | 2 | - | - | - | - | - | 51 | 0 |
| 304 | -.020 | 9 | 2 | - | - | - | - | - | 66 | 0 |
| 305 | -.050 | 18 | 2 | - | - | - | - | - | 30 | 0 |
| 306 | -.070 | 3 | 1 | - | - | 11 | - | - | 144 | 0 |
| 307 | -.730 | 7 | 2 | - | - | 11 | - | - | 360 | 0 |
| 308 | 1.000 | - | - | - | - | - | - | - | - | 0 |
| 309 | -.210 | - | - | - | - | - | - | 85 | - | 0 |
| 310 | -.150 | - | - | - | - | - | - | 86 | - | 0 |
| 311 | -.060 | - | - | - | - | - | - | 87 | - | 0 |

TOTAL NUMBER OF SUBTASKS = 10

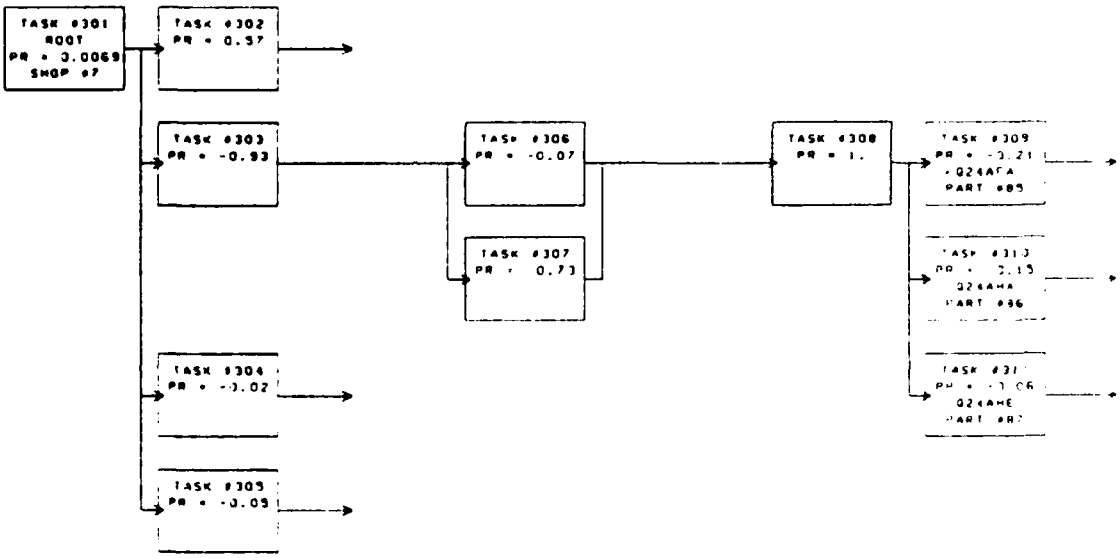


FIGURE 28

III.1.5.28 TASK #312 NETWORK -

41A** -- COCKPIT AIR TEMPERATURE CONTROL SYSTEM

| | | PERSONNEL | | | | | | | | |
|---|---|---|---|---|---|---|---|---|---|---|
| | | TEAM 1 | | TEAM 2 | | AGE | | PART | | |
| SUBTASK | PROB | TYP | # | TYP | # | #1 | #2 | NO. | TIME | DIS |
| 313 | .320 | 4 | 1 | - | - | - | - | - | 36 | 0 |
| 314 | 1.000 | 4 | 2 | - | - | - | - | - | 166 | 0 |
| 315 | -.200 | - | - | - | - | - | - | 86 | - | 0 |
| 316 | -.030 | - | - | - | - | - | - | 89 | - | 0 |
| 317 | -.120 | - | - | - | - | - | - | 90 | - | 0 |

TOTAL NUMBER OF SUBTASKS = 5

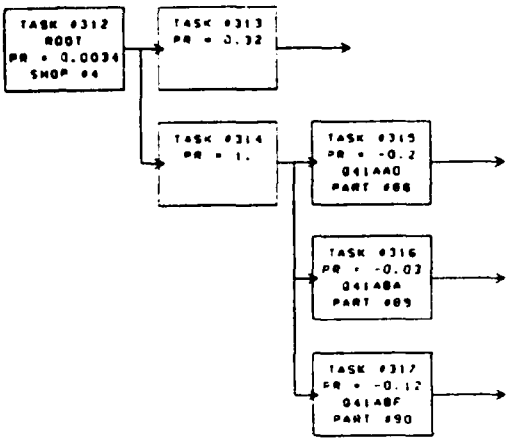


FIGURE 29

III.1.5.29 TASK #318 NETWORK -

41B** -- AIR CONDITIONING SYSTEM

| SUBTASK | PROB | PERSONNEL TEAM 1 TYP | TEAM 1 # | TEAM 2 TYP | TEAM 2 # | AGE #1 | AGE #2 | PART NO. | TIME | DIS |
|---|---|---|---|---|---|---|---|---|---|---|
| 319 | 1.000 | 4 | 1 | - | - | - | - | - | 12 | 0 |
| 320 | .310 | 4 | 1 | - | - | - | - | - | 12 | 0 |
| 321 | .030 | 1 | 1 | - | - | - | - | - | 54 | 0 |
| 322 | 1.000 | 4 | 1 | - | - | - | - | - | 27 | 0 |
| 323 | -.270 | 4 | 2 | - | - | 11 | - | - | 84 | 0 |
| 324 | -.640 | 4 | 2 | - | - | 11 | - | - | 366 | 0 |
| 325 | -.090 | 1 | 1 | - | - | 11 | - | - | 54 | 0 |
| 326 | 1.000 | - | - | - | - | - | - | - | - | 0 |
| 327 | .210 | - | - | - | - | 7 | - | 91 | - | 0 |
| 328 | -.060 | - | - | - | - | 7 | - | 92 | - | 0 |
| 329 | -.090 | - | - | - | - | 7 | - | 93 | - | 0 |
| 330 | -.030 | - | - | - | - | 7 | - | 94 | - | 0 |
| 331 | -.230 | - | - | - | - | 7 | - | 95 | - | 0 |
| 332 | -.060 | - | - | - | - | 7 | - | 96 | - | 0 |
| 333 | -.030 | 4 | 2 | - | - | 7 | - | 97 | - | 0 |

TOTAL NUMBER OF SUBTASKS = 15

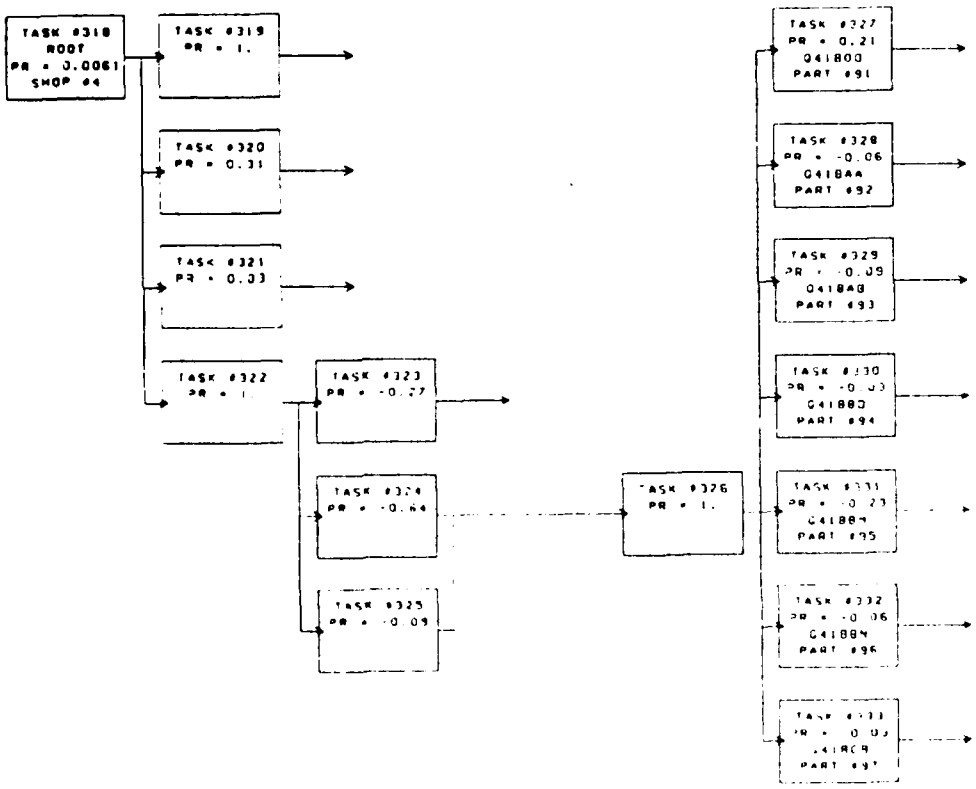


FIGURE 30

III.1.5.30 TASK #334 NETWORK -

41C** -- PRESSURIZATION

| SUBTASK | PROB | PERSONNEL TEAM 1 TYP | TEAM 1 # | TEAM 2 TYP | TEAM 2 # | AGE #1 | AGE #2 | PART NO. | TIME | DIS |
|---|---|---|---|---|---|---|---|---|---|---|
| 335 | .350 | 4 | 2 | - | - | - | - | - | 54 | 0 |
| 336 | 1.000 | 4 | 2 | - | - | 12 | - | - | 360 | 0 |
| 337 | .500 | 4 | 1 | - | - | - | - | - | 66 | 0 |

TOTAL NUMBER OF SUBTASKS = 3

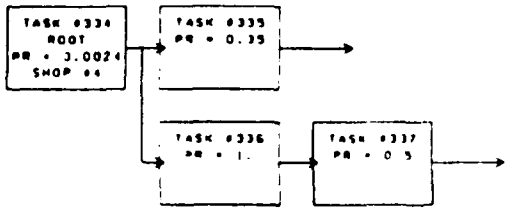


FIGURE 31

III.1.5.31 TASK #338 NETWORK -

41E** -- ANTI-ICE SYSTEM

| SUBTASK | PROB | PERSONNEL TEAM 1 TYP | TEAM 1 # | TEAM 2 TYP | TEAM 2 # | AGE #1 | AGE #2 | PART NO. | TIME | DIS |
|---|---|---|---|---|---|---|---|---|---|---|
| 339 | 1.000 | 3 | 1 | - | - | - | - | 98 | 192 | 0 |

TOTAL NUMBER OF SUBTASKS = 1

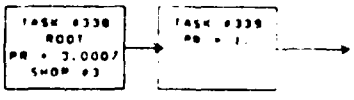


FIGURE 32

III.1.5.32 TASK #340 NETWORK -

41G** -- WASH SYSTEM

| SUBTASK | PROB | PERSONNEL TEAM 1 TYP | TEAM 1 # | TEAM 2 TYP | TEAM 2 # | AGE #1 | AGE #2 | PART NO. | TIME | DIS |
|---|---|---|---|---|---|---|---|---|---|---|
| 341 | .020 | 4 | 2 | - | - | 12 | - | 99 | - | 0 |
| 342 | .010 | 4 | 1 | - | - | 12 | - | 100 | - | 0 |

TOTAL NUMBER OF SUBTASKS = 2

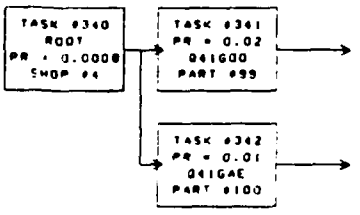


FIGURE 33

III.1.5.33 TASK #343 NETWORK -

42A** -- AC POWER GENERATING SYSTEM

| SUBTASK | PROB | PERSONNEL TEAM 1 TYP | TEAM 1 # | TEAM 2 TYP | TEAM 2 # | AGE #1 | AGE #2 | PART NO. | TIME | DIS |
|---|---|---|---|---|---|---|---|---|---|---|
| 344 | .020 | 3 | 1 | - | - | - | - | - | 102 | 0 |
| 345 | 1.000 | 3 | 2 | - | - | 11 | - | - | 102 | 0 |
| 346 | .940 | 7 | 2 | - | - | - | - | - | 204 | 0 |
| 347 | .020 | - | - | - | - | - | - | 101 | - | 0 |
| 348 | -.480 | 7 | 2 | - | - | - | - | 102 | - | 0 |
| 349 | -.190 | 3 | 1 | - | - | - | - | 103 | - | 0 |

TOTAL NUMBER OF SUBTASKS = 6

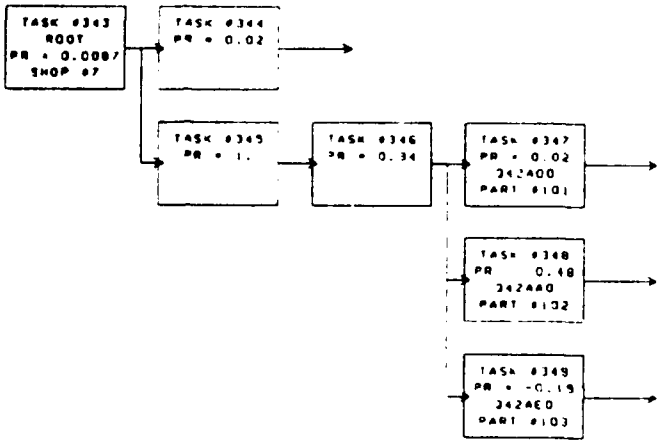


FIGURE 34

III.1.5.34 TASK #350 NETWORK -

42B** -- EMERGENCY AC POWER SYSTEM

| SUBTASK | PROB | PERSONNEL TEAM 1 TYP | TEAM 1 # | TEAM 2 TYP | TEAM 2 # | AGE #1 | AGE #2 | PART NO | TIME | DIS |
|---|---|---|---|---|---|---|---|---|---|---|
| 351 | .140 | 3 | 2 | - | - | - | - | - | 90 | 0 |
| 352 | -.140 | 3 | 2 | - | - | - | - | - | 162 | 0 |
| 353 | -.860 | 3 | 1 | - | - | - | - | - | 171 | 0 |
| 354 | .670 | 3 | 1 | - | - | - | - | 104 | - | 0 |

TOTAL NUMBER OF SUBTASKS = 4

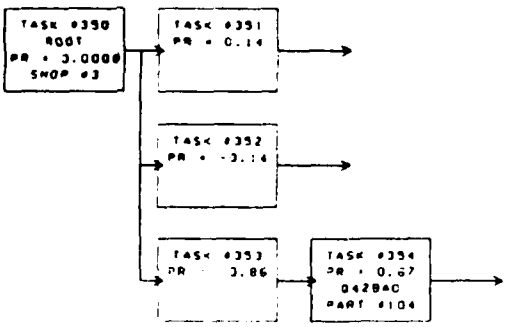


FIGURE 35

III 1.5.35 TASK #355 NETWORK -

42E** -- EMERGENCY DC POWER SYSTEM

| SUBTASK | PROB | PERSONNEL TEAM 1 TYP | TEAM 1 # | TEAM 2 TYP | TEAM 2 # | AGE #1 | AGE #2 | PART NO. | TIME | DIS |
|---|---|---|---|---|---|---|---|---|---|---|
| 356 | -.080 | 18 | 1 | - | - | - | - | - | 60 | 0 |
| 357 | -.920 | 3 | 1 | - | - | - | - | - | 102 | 0 |

TOTAL NUMBER OF SUBTASKS = 2

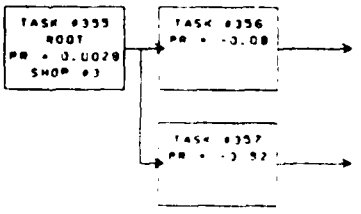


FIGURE 36

III.1.5.36 TASK #358 NETWORK -

42F** -- AC/DC DISTRIBUTION SYSTEM

| SUBTASK | PROB | PERSONNEL TEAM 1 TYP | TEAM 1 # | TEAM 2 TYP | TEAM 2 # | AGE #1 | AGE #2 | PART NO | TIME | DIS |
|---|---|---|---|---|---|---|---|---|---|---|
| 359 | .320 | 3 | 1 | - | - | - | - | - | 114 | 0 |
| 360 | -.950 | 3 | 1 | - | - | 11 | - | - | 102 | 0 |
| 361 | -.050 | 18 | 1 | - | - | - | - | - | 60 | 0 |
| 362 | .250 | - | - | - | - | - | - | 105 | - | 0 |
| 363 | -.130 | 3 | 1 | - | - | - | - | 106 | - | 0 |
| 364 | -.040 | 3 | 1 | - | - | - | - | 107 | - | 0 |
| 365 | -.130 | 3 | 1 | - | - | - | - | 108 | - | 0 |
| 366 | -.040 | 3 | 1 | - | - | - | - | 109 | - | 0 |

TOTAL NUMBER OF SUBTASKS = 8

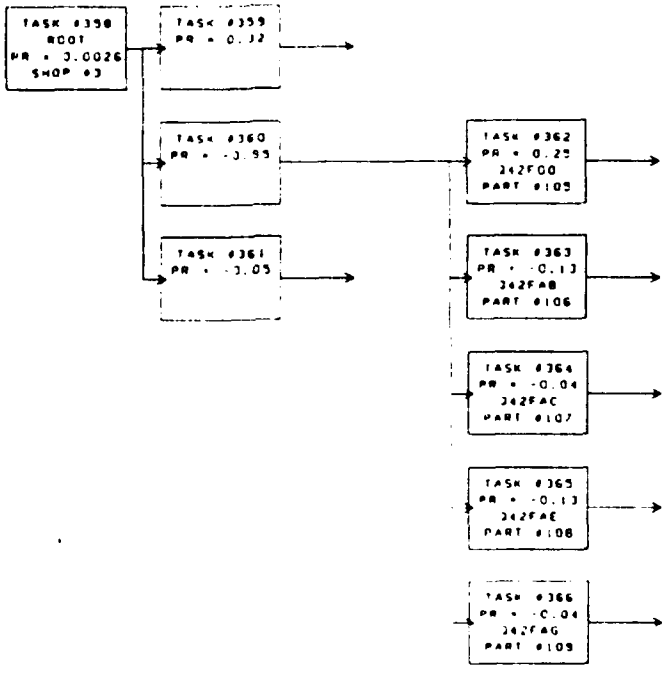


FIGURE 37

III.1.5.37 TASK #367 NETWORK -

44A** -- LIGHTING CONTROLS

| SUBTASK | PROB | PERSONNEL TEAM 1 TYP | TEAM 1 # | TEAM 2 TYP | TEAM 2 # | AGE #1 | AGE #2 | PART NO | TIME | DIS |
|---|---|---|---|---|---|---|---|---|---|---|
| 368 | 330 | 3 | 1 | - | - | - | - | - | 100 | 0 |
| 369 | 1.000 | 3 | 1 | - | - | - | - | - | 12 | 0 |
| 370 | - 600 | 3 | 1 | - | - | 11 | - | - | 16[illegible] | 0 |
| 371 | - 200 | 1 | 1 | - | - | 11 | - | | 42 | [illegible] |
| 372 | 1.000 | - | - | - | - | - | - | 110 | | 0 |

TOTAL NUMBER OF SUBTASKS = 5

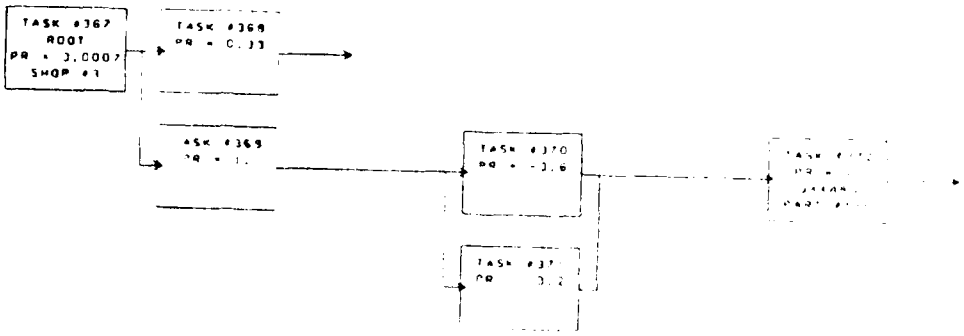


FIGURE 36

III.1.5.38 TASK #373 NETWORK -

44B** -- EXTERIOR LIGHTING SYSTEM

| SUBTASK | PROB | PERSONNEL TEAM 1 TYP | TEAM 1 # | TEAM 2 TYP | TEAM 2 # | AGE #1 | AGE #2 | PART NO | TIME | DIS |
|---|---|---|---|---|---|---|---|---|---|---|
| 374 | -.690 | 3 | 1 | - | - | - | - | - | 36 | 0 |
| 375 | -.250 | 18 | 1 | - | - | - | - | - | 30 | 0 |
| 376 | -.060 | 1 | 1 | - | - | - | - | - | 54 | 0 |
| 377 | -.270 | 3 | 1 | - | - | 11 | - | - | 174 | 0 |
| 378 | -.490 | 1 | 1 | - | - | 11 | - | - | 84 | 0 |
| 379 | 1.000 | - | - | - | - | - | - | - | - | 0 |
| 380 | -.110 | - | - | - | - | - | - | 111 | - | 0 |
| 381 | -.210 | 1 | 1 | - | - | - | - | 112 | - | 0 |
| 382 | -.050 | - | - | - | - | - | - | 113 | - | 0 |

TOTAL NUMBER OF SUBTASKS = 9

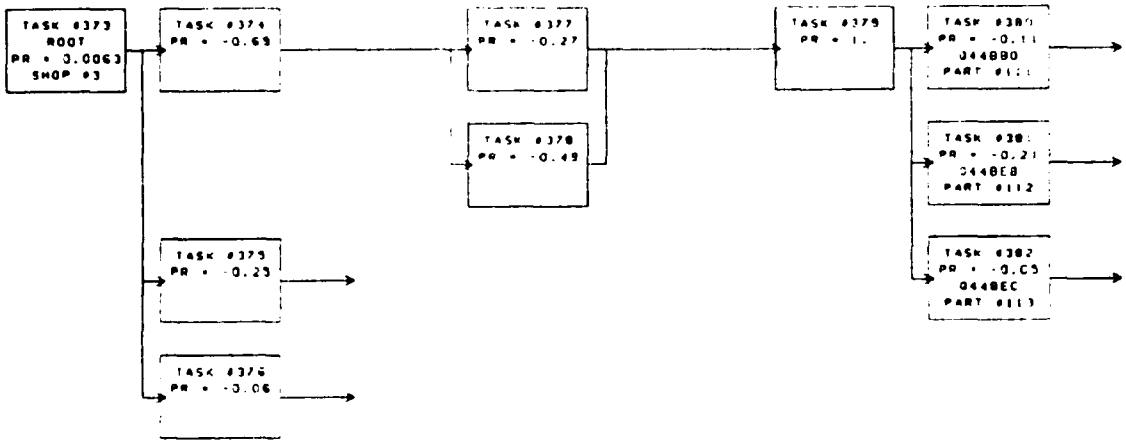


FIGURE 39

III.1.5.39 TASK #383 NETWORK -

44C** -- INTERIOR LIGHTING SYSTEM

| SUBTASK | PROB | PERSONNEL TEAM 1 TYP | TEAM 1 # | TEAM 2 TYP | TEAM 2 # | AGE #1 | AGE #2 | PART NO. | TIME | DIS |
|---|---|---|---|---|---|---|---|---|---|---|
| 384 | .020 | 1 | 1 | - | - | - | - | - | 54 | C |
| 385 | -.980 | 3 | 1 | - | - | - | - | - | 99 | O |
| 386 | -.020 | 1 | 1 | - | - | - | - | - | 54 | O |
| 387 | -.020 | 8 | 1 | - | - | 11 | - | - | 144 | O |
| 388 | -.310 | 3 | 1 | - | - | 11 | - | - | 168 | O |
| 389 | -.060 | 1 | 1 | - | - | 11 | - | - | 84 | O |
| 390 | .950 | - | - | - | - | - | - | - | - | O |
| 391 | .210 | - | - | - | - | - | - | 114 | - | O |
| 392 | -.210 | - | - | - | - | - | - | 115 | - | C |
| 393 | -.320 | - | - | - | - | - | - | 116 | - | O |
| 394 | -.110 | - | - | - | - | - | - | 117 | - | O |

TOTAL NUMBER OF SUBTASKS = 11

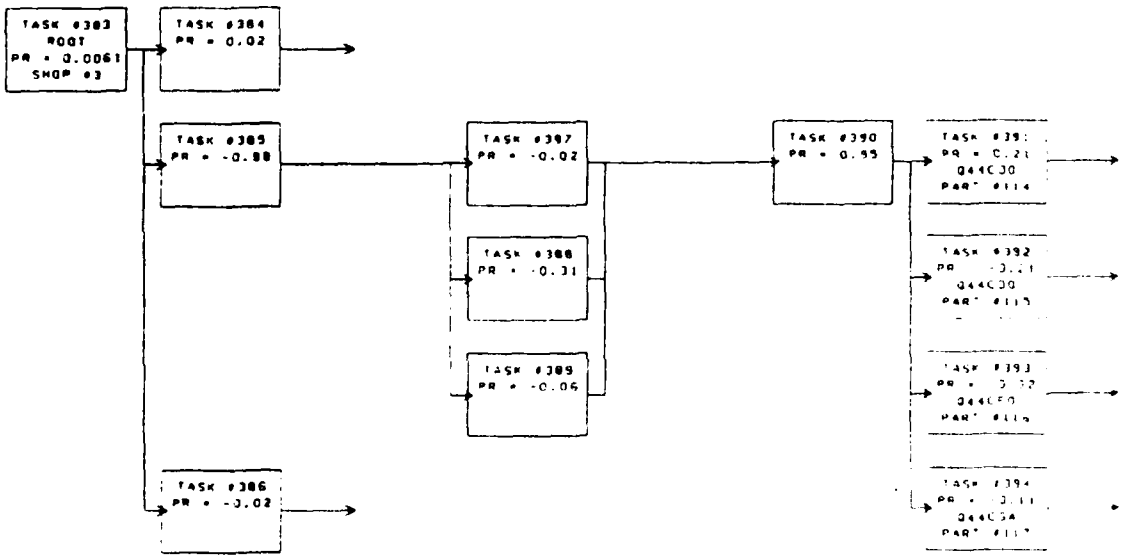


FIGURE 40

III.1.5.40 TASK #395 NETWORK -

45A** -- LEFT HYDRAULIC POWER SYSTEM

| SUBTASK | PROB | PERSONNEL TEAM 1 TYP | TEAM 1 # | TEAM 2 TYP | TEAM 2 # | AGE #1 | AGE #2 | PART NO | TIME | DIS |
|---|---|---|---|---|---|---|---|---|---|---|
| 396 | .030 | 1 | 2 | - | - | - | - | - | 54 | O |
| 397 | -.630 | 9 | 2 | - | - | - | - | - | 6 | O |
| 398 | -.190 | 6 | 2 | - | - | - | - | - | 126 | O |
| 399 | -.180 | 2 | 1 | - | - | - | - | - | 432 | O |
| 400 | -.870 | 17 | 3 | - | - | 4 | - | - | 336 | O |
| 401 | -.050 | 2 | 1 | - | - | 4 | - | - | 642 | O |
| 402 | -.050 | 1 | 2 | - | - | 4 | - | - | 84 | O |
| 403 | .910 | - | - | - | - | - | - | - | - | O |
| 404 | .040 | - | - | - | - | - | - | 118 | - | O |
| 405 | -.050 | 7 | 1 | - | - | - | - | 119 | - | O |
| 406 | -.020 | - | - | - | - | - | - | 120 | - | O |
| 407 | -.050 | - | - | - | - | - | - | 121 | - | O |
| 408 | -.170 | - | - | - | - | - | - | 122 | - | O |
| 409 | -.070 | - | - | - | - | - | - | 123 | - | O |

TOTAL NUMBER OF SUBTASKS = 14

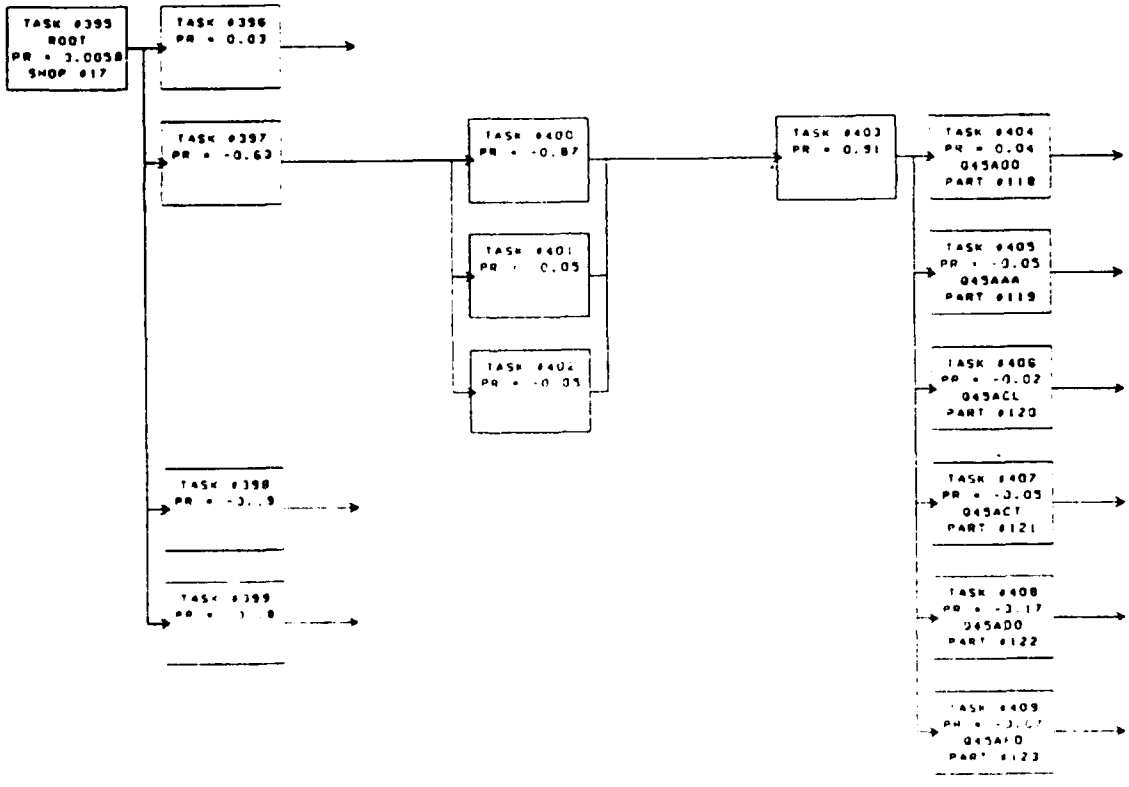


FIGURE 41

III.1.5.41 TASK #410 NETWORK -

45B** -- RIGHT HYDRAULIC POWER SYSTEM

| SUBTASK | PROB | PERSONNEL TEAM 1 TYP | TEAM 1 # | TEAM 2 TYP | TEAM 2 # | AGE #1 | AGE #2 | PART NO. | TIME | DIS |
|---|---|---|---|---|---|---|---|---|---|---|
| 411 | -.950 | 6 | 2 | - | - | - | - | - | 78 | 0 |
| 412 | -.050 | 18 | 1 | - | - | - | - | - | 42 | 0 |
| 413 | -.070 | 9 | 1 | - | - | 2 | 4 | - | 102 | 0 |
| 414 | -.540 | 6 | 2 | - | - | 2 | 4 | - | 246 | 0 |
| 415 | 1.000 | - | - | - | - | - | - | - | - | 0 |
| 416 | -.150 | - | - | - | - | 3 | 4 | 124 | - | 0 |
| 417 | -.150 | 6 | 2 | - | - | 3 | 4 | 125 | - | 0 |

TOTAL NUMBER OF SUBTASKS = 7

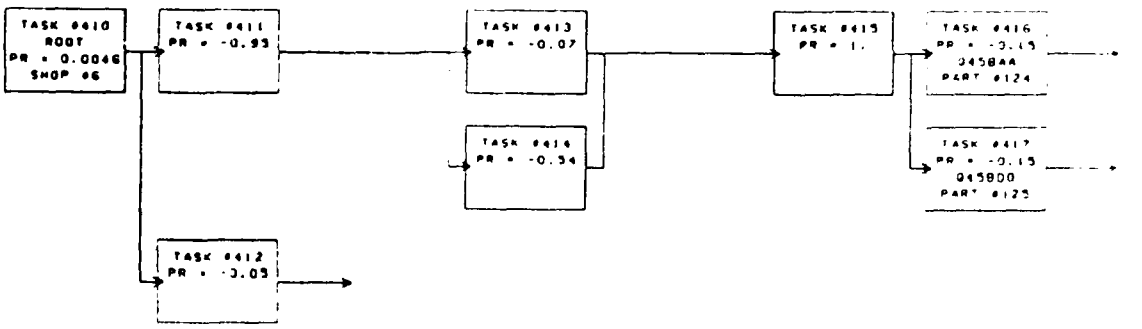


FIGURE 42

III.1.5.42 TASK #418 NETWORK -

45D** -- APU DRIVEN HYDRAULIC SYSTEM

| SUBTASK | PROB | PERSONNEL TEAM 1 TYP | TEAM 1 # | TEAM 2 TYP | TEAM 2 # | AGE #1 | AGE #2 | PART NO | TIME | DIS |
|---|---|---|---|---|---|---|---|---|---|---|
| 419 | .560 | 6 | 2 | - | - | 3 | 4 | 126 | 180 | 0 |

TOTAL NUMBER OF SUBTASKS = 1

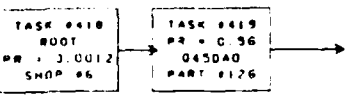


FIGURE 43

III.1.5.43 TASK #420 NETWORK -

46A** -- FUEL TANK INSTALLATION

| SUBTASK | PROB | PERSONNEL TEAM 1 TYP | TEAM 1 # | TEAM 2 TYP | TEAM 2 # | AGE #1 | AGE #2 | PART NO | TIME | DIS |
|---|---|---|---|---|---|---|---|---|---|---|
| 421 | .370 | 23 | 2 | - | - | - | - | - | 66 | 0 |
| 422 | .530 | 23 | 2 | - | - | - | - | - | 480 | 0 |
| 423 | .370 | 1 | 1 | - | - | - | - | - | 30 | 0 |
| 424 | -.690 | 23 | 2 | - | - | - | - | - | 144 | 0 |
| 425 | -.150 | 18 | 1 | - | - | - | - | - | 144 | 0 |
| 426 | -.150 | 23 | 3 | - | - | - | - | - | 318 | 0 |
| 427 | 1.000 | 1 | 3 | - | - | 17 | - | - | 60 | 0 |
| 428 | .250 | - | - | - | - | 17 | - | 127 | - | 0 |

TOTAL NUMBER OF SUBTASKS = 8

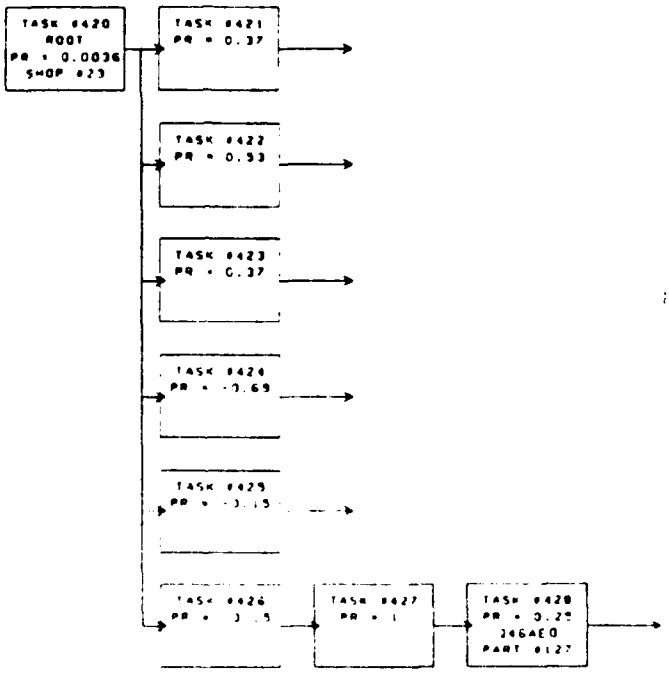


FIGURE 44

III.1.5.44 TASK #429 NETWORK -

J6B** -- AERIAL REFUELING RECEPTACLE

| SUBTASK | PROB | PERSONNEL TEAM 1 TYP | TEAM 1 # | TEAM 2 TYP | TEAM 2 # | AGE #1 | AGE #2 | PART NO | TIME | DIS |
|---|---|---|---|---|---|---|---|---|---|---|
| 430 | .570 | 3 | 2 | - | - | - | - | - | 30 | 0 |
| 431 | .290 | 23 | 2 | - | - | - | - | - | 120 | 0 |
| 432 | 1.000 | 23 | 2 | - | - | - | - | - | 246 | 0 |
| 433 | -.370 | - | - | - | - | - | - | 128 | - | 0 |
| 434 | -.120 | 23 | 1 | - | - | - | - | 129 | - | 0 |

TOTAL NUMBER OF SUBTASKS = 5

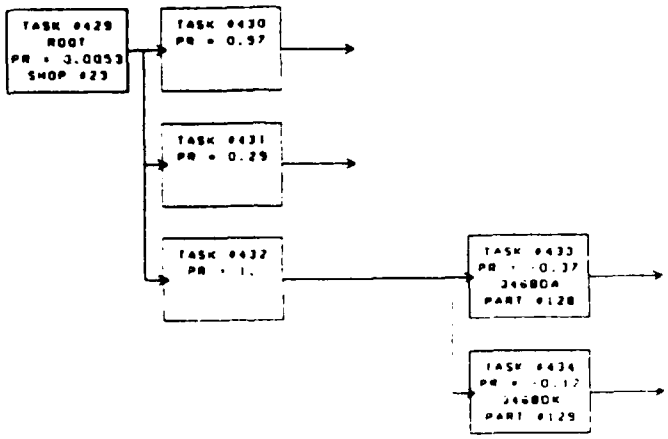


FIGURE 45

III.1.5.45 TASK #435 NETWORK -

46C** -- FUEL VENT/PRESSURE SYSTEM

| SUBTASK | PROB | PERSONNEL TEAM 1 TYP | TEAM 1 # | TEAM 2 TYP | TEAM 2 # | AGE #1 | AGE #2 | PART NO | TIME | DIS |
|---|---|---|---|---|---|---|---|---|---|---|
| 436 | .580 | 9 | 2 | - | - | - | - | - | 264 | 0 |
| 437 | .110 | 1 | 2 | - | - | - | - | - | 72 | 0 |
| 438 | .320 | 23 | 2 | - | - | - | - | - | 120 | 0 |
| 439 | -.890 | 23 | 2 | - | - | - | - | - | 441 | 0 |
| 440 | -.110 | 18 | 1 | - | - | - | - | - | 60 | 0 |

TOTAL NUMBER OF SUBTASKS = 5

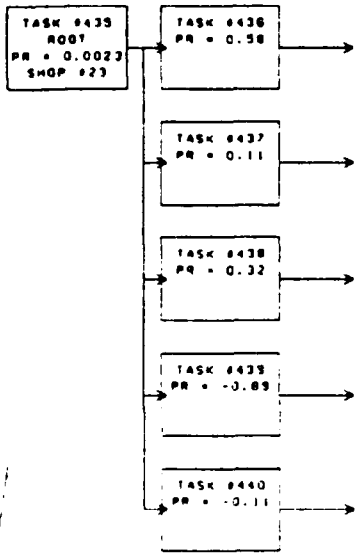


FIGURE 46

III.1.5.46 TASK #441 NETWORK -

46D** -- FUEL QUANTITY INDICATING SYSTEM

| SUBTASK | PROB | PERSONNEL TEAM 1 TYP | TEAM 1 # | TEAM 2 TYP | TEAM 2 # | AGE #1 | AGE #2 | PART NO | TIME | DIS |
|---|---|---|---|---|---|---|---|---|---|---|
| 442 | .160 | 9 | 2 | - | - | - | - | - | 102 | 0 |
| 443 | -.580 | 9 | 2 | - | - | - | - | - | 432 | 0 |
| 444 | -.020 | 18 | 1 | - | - | - | - | - | 30 | 0 |
| 445 | -.400 | 23 | 2 | - | - | - | - | - | 616 | 0 |
| 446 | -.180 | - | - | - | - | - | - | 130 | - | 0 |
| 447 | -.530 | 9 | 2 | - | - | - | - | 131 | - | 0 |

TOTAL NUMBER OF SUBTASKS = 6

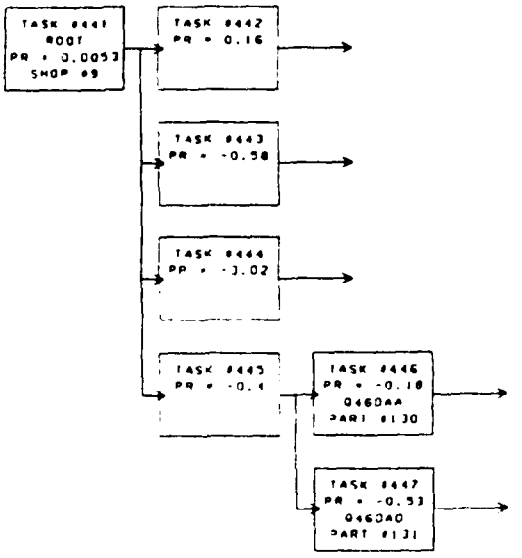


FIGURE 47

III.1.5.47 TASK #448 NETWORK -

46E** -- FUEL FEED SYSTEM

| SUBTASK | PROB | PERSONNEL TEAM 1 TYP | TEAM 1 # | TEAM 2 TYP | TEAM 2 # | AGE #1 | AGE #2 | PART NO. | TIME | DIS |
|---|---|---|---|---|---|---|---|---|---|---|
| 449 | .100 | 23 | 2 | - | - | - | - | - | 150 | 0 |
| 450 | -.900 | 23 | 2 | - | - | - | - | - | 72 | 0 |
| 451 | -.100 | 3 | 2 | - | - | - | - | - | 24 | 0 |
| 452 | -.620 | 1 | 3 | - | - | - | - | - | 960 | 0 |
| 453 | 1.000 | 23 | 2 | - | - | - | - | - | 432 | 0 |
| 454 | -.070 | 26 | 2 | - | - | - | - | - | 240 | 0 |
| 455 | .850 | - | - | - | - | - | - | - | - | 0 |
| 456 | .090 | - | - | - | - | - | - | 132 | - | 0 |

TOTAL NUMBER OF SUBTASKS = 8

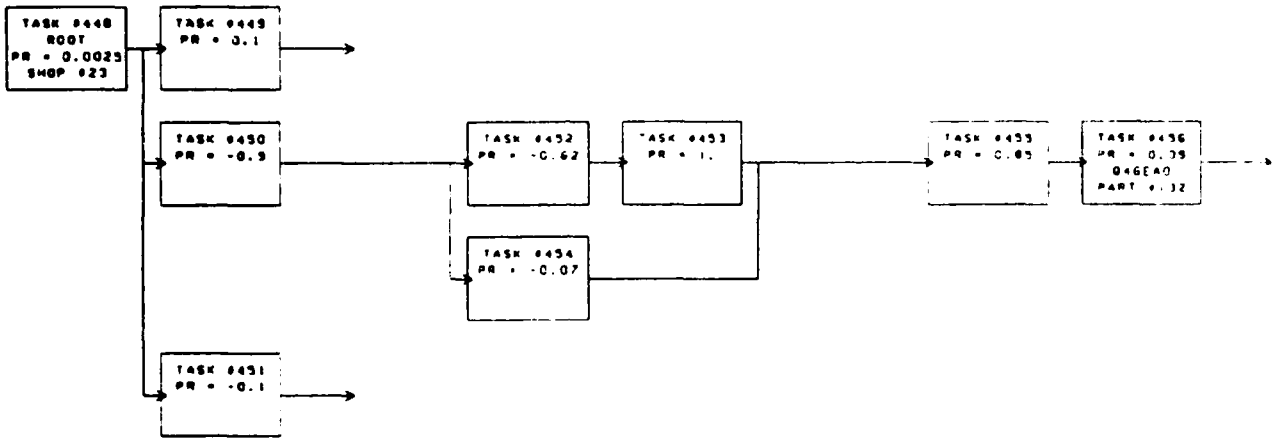


FIGURE 48

III.1.5.48 TASK #457 NETWORK -

46F** -- GROUND REFUELING SYSTEM

| SUBTASK | PROB | PERSONNEL TEAM 1 TYP | TEAM 1 # | TEAM 2 TYP | TEAM 2 # | AGE #1 | AGE #2 | PART NO. | TIME | DIS |
|---|---|---|---|---|---|---|---|---|---|---|
| 458 | .050 | 3 | 2 | - | - | - | - | - | 102 | 0 |
| 459 | .050 | 23 | 2 | - | - | - | - | - | 150 | 0 |
| 460 | .050 | 3 | 1 | - | - | - | - | - | 72 | 0 |
| 461 | 1.000 | 23 | 2 | - | - | - | - | - | 501 | 0 |
| 462 | .710 | 1 | 3 | - | - | - | - | - | 60 | 0 |
| 463 | .080 | - | - | - | - | - | - | 133 | - | 0 |

TOTAL NUMBER OF SUBTASKS = 6

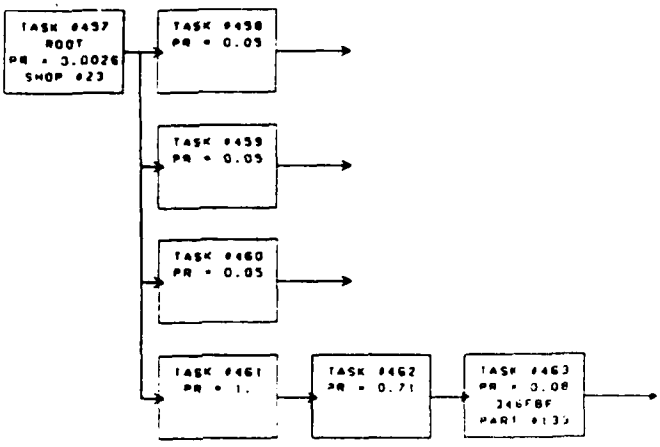


FIGURE 49

III.1.5.49 TASK #464 NETWORK -

47A** --LOX SUPPLY SYSTEM

| SUBTASK | PROB | PERSONNEL TEAM 1 TYP | TEAM 1 # | TEAM 2 TYP | TEAM 2 # | AGE #1 | AGE #2 | PART NO | TIME | DIS |
|---|---|---|---|---|---|---|---|---|---|---|
| 465 | .040 | 9 | 1 | - | - | - | - | - | 60 | 0 |
| 466 | .130 | 4 | 1 | - | - | - | - | - | 48 | 0 |
| 467 | .020 | 1 | 1 | - | - | - | - | - | 42 | 0 |
| 468 | -.870 | 9 | 2 | - | - | - | - | - | 24 | 0 |
| 469 | -.110 | 4 | 1 | - | - | - | - | - | 114 | 0 |
| 470 | -.020 | 1 | 2 | - | - | - | - | - | 54 | 0 |
| 471 | -.220 | 9 | 2 | - | - | - | - | - | 108 | 0 |
| 472 | -.500 | 4 | 2 | - | - | - | - | - | 126 | 0 |
| 473 | -.050 | 1 | 2 | - | - | - | - | - | 84 | 0 |
| 474 | 1.000 | - | - | - | - | - | - | - | - | 0 |
| 475 | -.060 | - | - | - | - | 18 | - | 134 | - | 0 |
| 476 | -.740 | - | - | - | - | 18 | - | 135 | - | 0 |
| 477 | -.020 | - | - | - | - | 18 | - | 136 | - | 0 |
| 478 | -.120 | - | - | - | - | 18 | - | 137 | - | 0 |
| 479 | -.060 | - | - | - | - | 18 | - | 138 | - | 0 |

TOTAL NUMBER OF SUBTASKS = 15

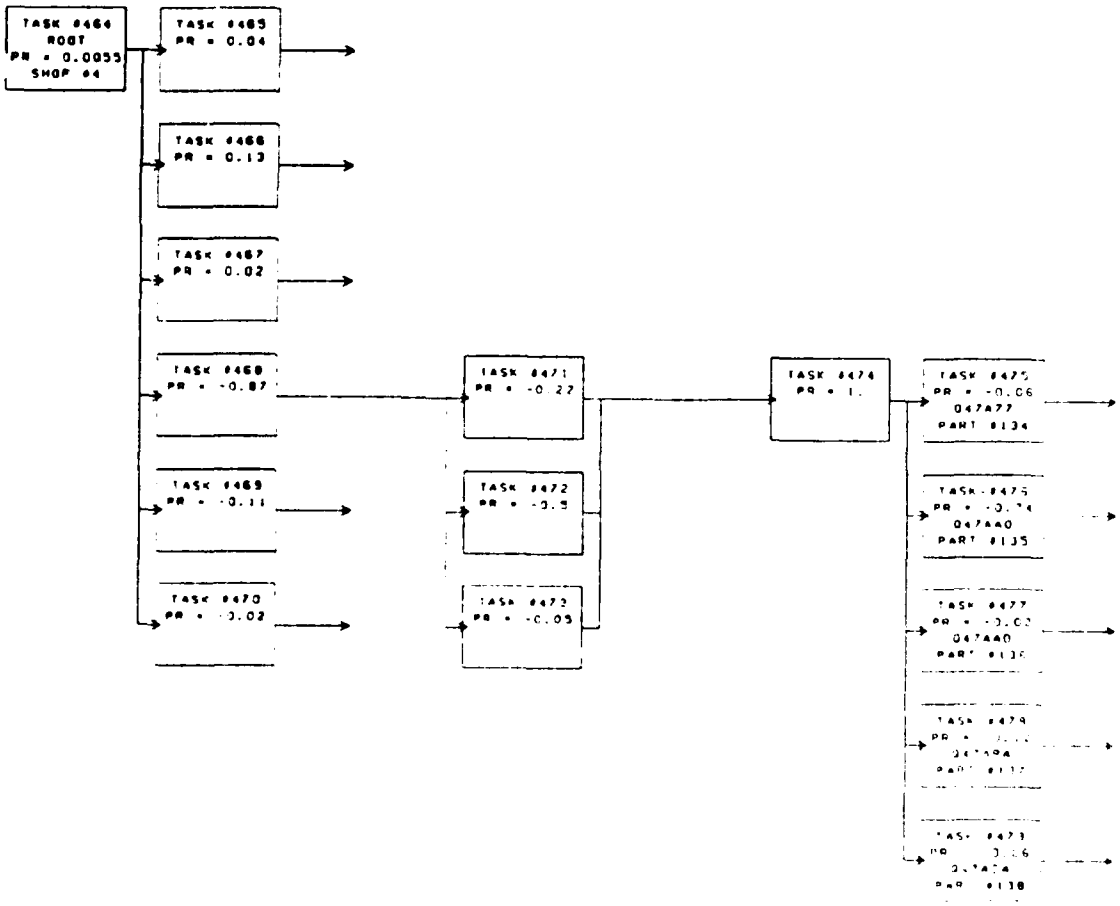


FIGURE 50

III 1.5.50 TASK #480 NETWORK -

49A** -- FIRE DETECTION AND OVERHEAT SYSTEM

| SUBTASK | PROB | PERSONNEL TEAM 1 TYP | TEAM 1 # | TEAM 2 TYP | TEAM 2 # | AGE #1 | AGE #2 | PART NO. | TIME | DIS |
|---|---|---|---|---|---|---|---|---|---|---|
| 481 | -.940 | 3 | 2 | - | - | - | - | - | 45 | 0 |
| 482 | -.060 | 4 | 1 | - | - | - | - | - | 66 | 0 |
| 483 | 1.000 | 4 | 2 | - | - | - | - | - | 180 | 0 |
| 484 | -.530 | 3 | 2 | - | - | 11 | - | - | 186 | 0 |
| 485 | -.180 | 4 | 2 | - | - | 11 | - | - | 420 | 0 |
| 486 | 1.000 | - | - | - | - | - | - | - | - | 0 |
| 487 | .130 | 7 | 1 | - | - | - | - | 139 | - | 0 |

TOTAL NUMBER OF SUBTASKS = 7

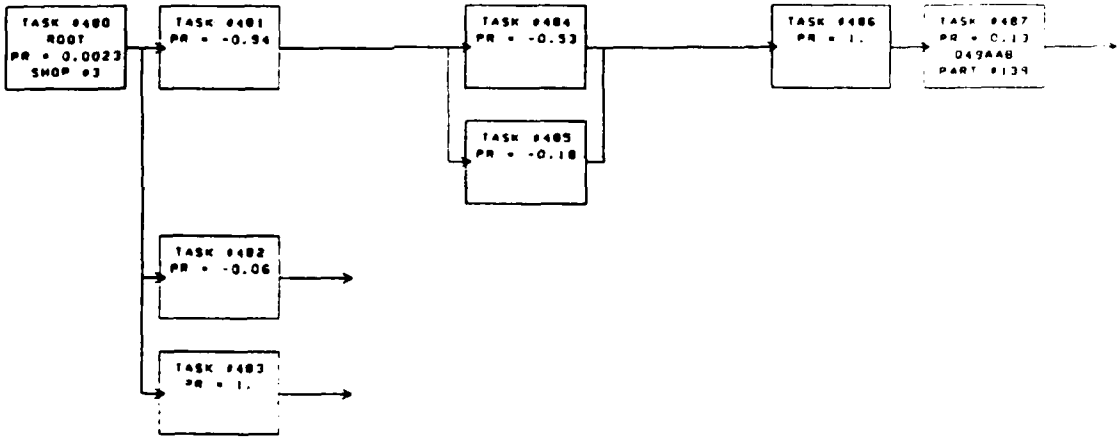


FIGURE 51

III.1.5.51 TASK #488 NETWORK -

498** -- FIRE EXTINGUISHING SYSTEM

| SUBTASK | PROB | PERSONNEL TEAM 1 TYP | TEAM 1 # | TEAM 2 TYP | TEAM 2 # | AGE #1 | AGE #2 | PART NO | TIME | DIS |
|---|---|---|---|---|---|---|---|---|---|---|
| 489 | .200 | 4 | 1 | - | - | - | - | - | 48 | C |
| 490 | -.800 | 3 | 1 | - | - | - | - | - | 30 | C |
| 491 | 1.000 | 3 | 2 | - | - | - | - | - | 120 | O |
| 492 | -.200 | 4 | 2 | - | - | - | - | - | 138 | O |
| 493 | 1.000 | - | - | - | - | 7 | - | 140 | - | C |
| 494 | .750 | - | - | - | - | 7 | - | 141 | - | O |

TOTAL NUMBER OF SUBTASKS = 6

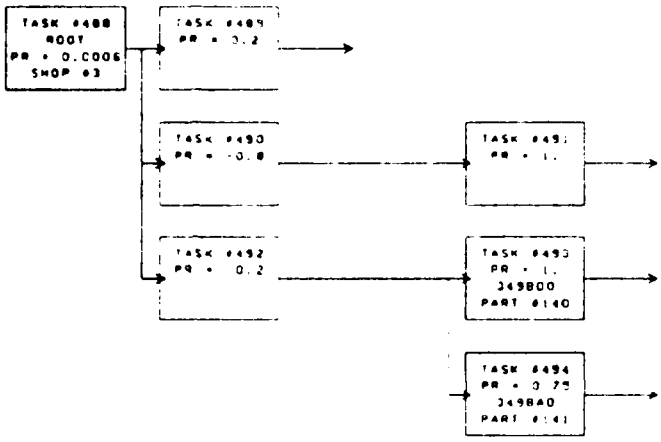


FIGURE 52

III.1.5.52 TASK #495 NETWORK -

51INS -- INERTIAL SYSTEMS

| SUBTASK | PROB | PERSONNEL TEAM 1 TYP | TEAM 1 # | TEAM 2 TYP | TEAM 2 # | AGE #1 | AGE #2 | PART NO | TIME | DIS |
|---|---|---|---|---|---|---|---|---|---|---|
| 496 | .170 | 15 | 3 | - | - | 11 | - | - | 174 | 0 |
| 497 | .280 | 15 | 3 | - | - | 11 | - | - | 204 | 0 |
| 498 | .110 | 15 | 3 | - | - | 11 | - | - | 162 | 0 |
| 499 | -.700 | 15 | 3 | - | - | 11 | - | - | 174 | 0 |
| 500 | -.300 | - | - | - | - | 11 | - | 142 | - | 0 |
| 501 | 1.000 | 15 | 3 | - | - | - | - | - | 222 | 0 |

TOTAL NUMBER OF SUBTASKS = 6

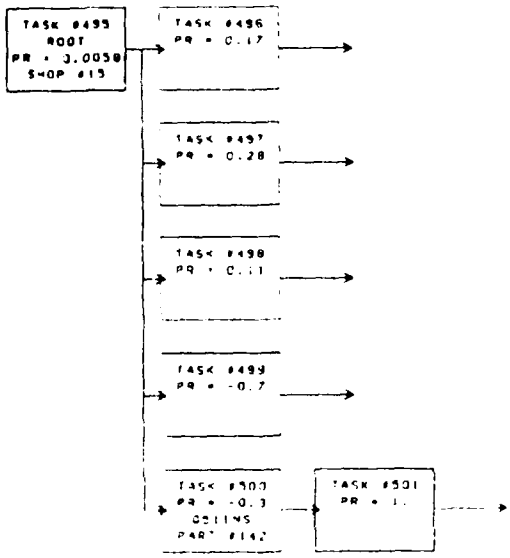


FIGURE 53

III.1.5.53 TASK #502 NETWORK -

51C** -- FLIGHT INSTRUMENTS

| | | PERSONNEL | | | | | | | | |
|---|---|---|---|---|---|---|---|---|---|---|
| | | TEAM 1 | | TEAM 2 | | AGE | | PART | | |
| SUBTASK | PROB | TYP | # | TYP | # | #1 | #2 | NO | TIME | DIS |
| 503 | .130 | 9 | 2 | - | - | - | - | - | 66 | 0 |
| 504 | -.980 | 9 | 2 | - | - | 11 | 13 | - | 126 | 0 |
| 505 | -.020 | 18 | 1 | - | - | - | - | - | 30 | 0 |
| 506 | .020 | - | - | - | - | 7 | 13 | 143 | - | 0 |
| 507 | -.010 | - | - | - | - | 7 | 13 | 144 | - | 0 |
| 508 | -.020 | 9 | 2 | - | - | 7 | 13 | 145 | - | 0 |
| 509 | -.050 | - | - | - | - | 7 | 13 | 146 | - | 0 |
| 510 | -.010 | 9 | 2 | - | - | 7 | 13 | 147 | - | 0 |
| 511 | -.160 | 9 | 2 | - | - | 7 | 13 | 148 | - | 0 |
| 512 | -.050 | - | - | - | - | 7 | 13 | 149 | - | 0 |
| 513 | -.040 | - | - | - | - | 7 | 13 | 150 | - | 0 |
| 514 | -.040 | 9 | 2 | - | - | 7 | 13 | 151 | - | 0 |
| 515 | -.080 | - | - | - | - | 7 | 13 | 152 | - | 0 |
| 516 | -.010 | - | - | - | - | 7 | 13 | 153 | - | 0 |
| 517 | -.030 | 9 | 2 | - | - | 7 | 13 | 154 | - | 0 |

TOTAL NUMBER OF SUBTASKS = 15

RESOURCE REQUIREMENTS
AIRCRAFT, PART AND SUPPORT EQUIPMENT REPAIR DATA

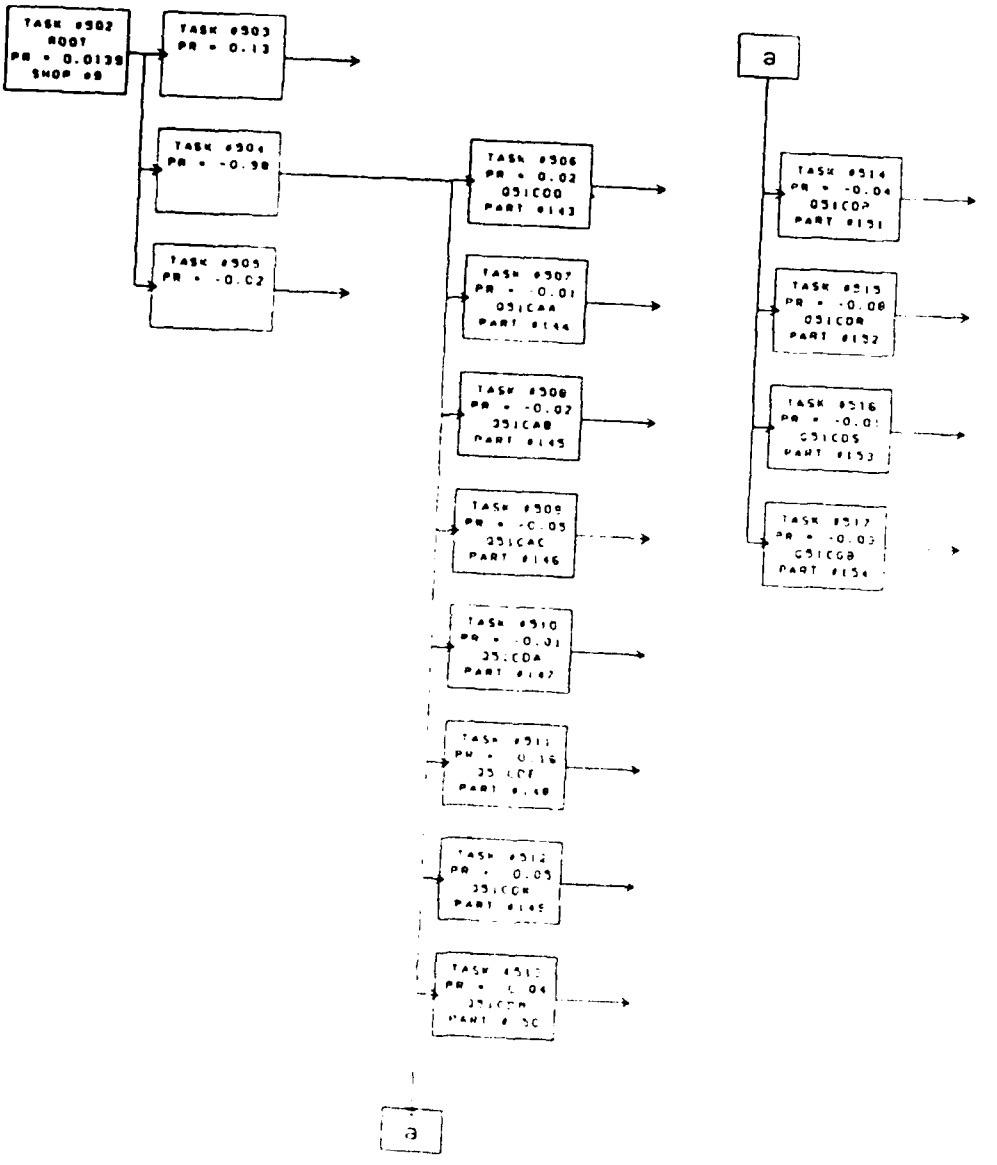


FIGURE 54

III.1.5.54 TASK #518 NETWORK -

51E** -- NAVIGATION INSTRUMENTS

| SUBTASK | PROB | PERSONNEL TEAM 1 TYP | TEAM 1 # | TEAM 2 TYP | TEAM 2 # | AGE #1 | AGE #2 | PART NO. | TIME | DIS |
|---|---|---|---|---|---|---|---|---|---|---|
| 519 | -.060 | 9 | 2 | - | - | - | - | - | 72 | 0 |
| 520 | -.880 | 9 | 1 | - | - | 11 | 13 | - | 90 | 0 |
| 521 | -.060 | 18 | 1 | - | - | - | - | - | 36 | 0 |
| 522 | .030 | - | - | - | - | 7 | 13 | 155 | - | 0 |
| 523 | .750 | 9 | 1 | - | - | 7 | 13 | 156 | - | 0 |

TOTAL NUMBER OF SUBTASKS = 5

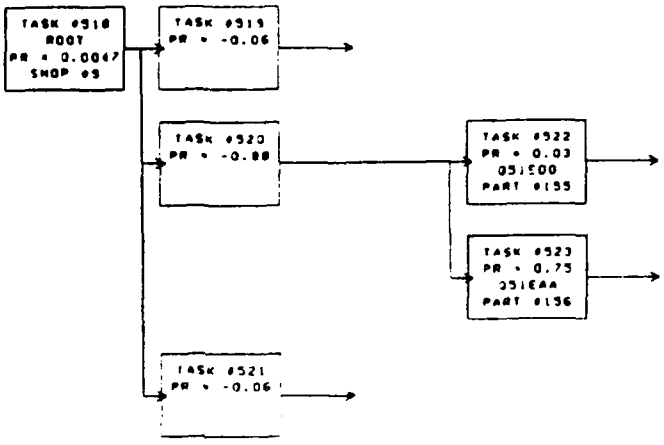


FIGURE 55

III.1.5.55 TASK #524 NETWORK -

51F** -- CONTROL SET, GYROSCOPE, ATTITUDE HEADING

| SUBTASK | PROB | PERSONNEL TEAM 1 TYP | TEAM 1 # | TEAM 2 TYP | TEAM 2 # | AGE #1 | AGE #2 | PART NO. | TIME | DIS |
|---|---|---|---|---|---|---|---|---|---|---|
| 525 | .270 | 9 | 2 | - | - | - | - | - | 72 | 0 |
| 526 | -.980 | 9 | 2 | - | - | 11 | - | - | 213 | 0 |
| 527 | .840 | 9 | 1 | - | - | 11 | - | - | 132 | 0 |
| 528 | -.020 | 18 | 1 | - | - | - | - | - | 30 | 0 |
| 529 | .150 | - | - | - | - | 7 | - | 157 | - | 0 |
| 530 | -.320 | - | - | - | - | 7 | - | 158 | - | 0 |
| 531 | -.320 | - | - | - | - | 7 | - | 159 | - | 0 |
| 532 | -.020 | - | - | - | - | 7 | - | 160 | - | 0 |
| 533 | -.050 | - | - | - | - | 7 | - | 161 | - | 0 |

TOTAL NUMBER OF SUBTASKS = 9

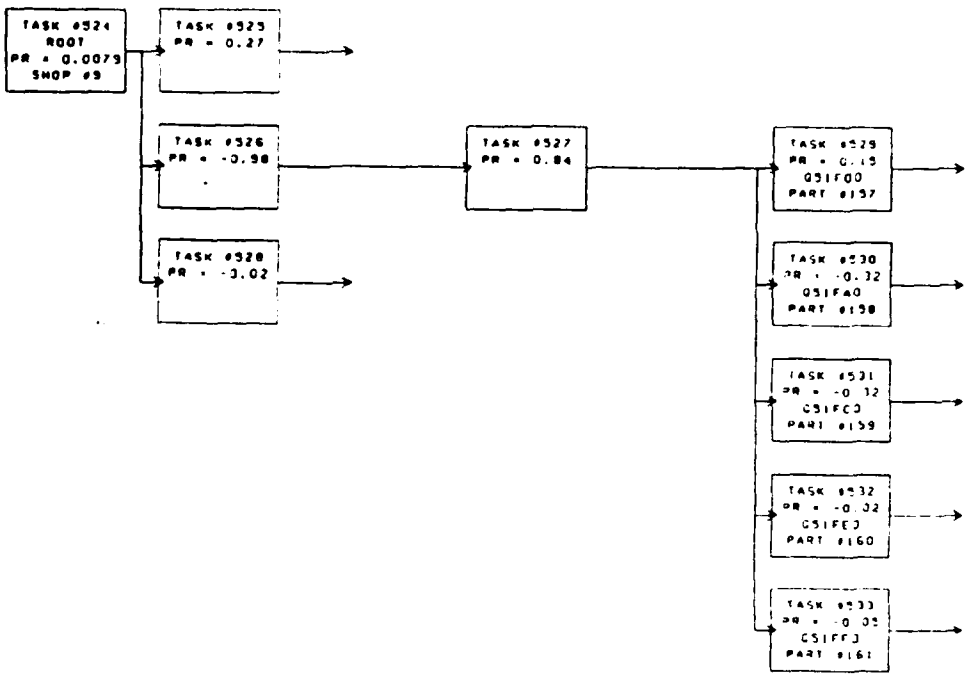


FIGURE 56

III.1.5.56 TASK #534 NETWORK -

51G** -- INDICATOR, HORIZONTAL SITUATION

| SUBTASK | PROB | PERSONNEL TEAM 1 TYP | TEAM 1 # | TEAM 2 TYP | TEAM 2 # | AGE #1 | AGE #2 | PART NO | TIME | DIS |
|---|---|---|---|---|---|---|---|---|---|---|
| 535 | .270 | 9 | 2 | - | - | - | - | - | 90 | 0 |
| 536 | 1.000 | 9 | 2 | - | - | 11 | - | - | 174 | 0 |
| 537 | .910 | 9 | 1 | - | - | 11 | - | - | 117 | 0 |
| 538 | .840 | 9 | 1 | - | - | 7 | - | 162 | - | 0 |

TOTAL NUMBER OF SUBTASKS = 4

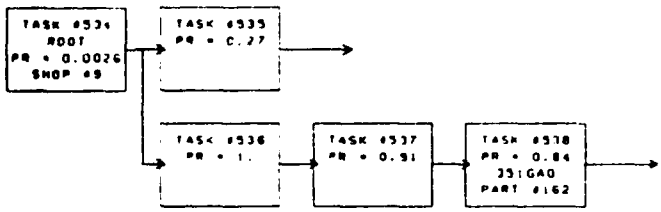


FIGURE 57

III.1.5.57 TASK #539 NETWORK -

52A** -- STABILITY AUGMENTATION SYSTEM

| SUBTASK | PROB | PERSONNEL TEAM 1 TYP | TEAM 1 # | TEAM 2 TYP | TEAM 2 # | AGE #1 | AGE #2 | PART NO | TIME | DIS |
|---|---|---|---|---|---|---|---|---|---|---|
| 540 | -.370 | 8 | 1 | - | - | - | - | 163 | - | 0 |
| 541 | -.110 | - | - | - | - | - | - | 164 | - | 0 |
| 542 | -.070 | 8 | 1 | - | - | - | - | 165 | - | 0 |

TOTAL NUMBER OF SUBTASKS = 3

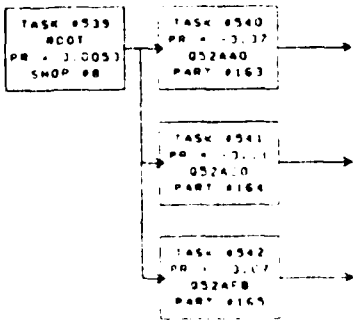


FIGURE 58

RESOURCE REQUIREMENTS
AIRCRAFT, PART AND SUPPORT EQUIPMENT REPAIR DATA

III 1 5.58 TASK #543 NETWORK -

52B** -- BETA DOT COMPUTER SYSTEM

| SUBTASK | PROB | PERSONNEL TEAM 1 TYP | TEAM 1 # | TEAM 2 TYP | TEAM 2 # | AGE #1 | AGE #2 | PART NO | TIME | DIS |
|---|---|---|---|---|---|---|---|---|---|---|
| 544 | .430 | 8 | 2 | - | - | - | - | 166 | - | 0 |

TOTAL NUMBER OF SUBTASKS = 1

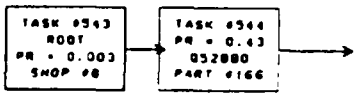


FIGURE 59

III.1.5.59 TASK #545 NETWORK -

55A** -- VGH RECORDING SYSTEM

| SUBTASK | PROB | PERSONNEL TEAM 1 TYP | TEAM 1 # | TEAM 2 TYP | TEAM 2 # | AGE #1 | AGE #2 | PART NO. | TIME | DIS |
|---|---|---|---|---|---|---|---|---|---|---|
| 546 | .450 | 9 | 1 | - | - | - | - | - | 102 | 0 |
| 547 | 1.000 | 9 | 2 | - | - | 11 | - | - | 330 | 0 |
| 548 | -.110 | 9 | 1 | - | - | - | - | - | 90 | 0 |
| 549 | 1.000 | 9 | 3 | - | - | 11 | - | - | 60 | 0 |
| 550 | -.070 | - | - | - | - | 7 | - | 167 | - | 0 |
| 551 | -.560 | - | - | - | - | 7 | - | 168 | - | 0 |
| 552 | -.140 | - | - | - | - | 7 | - | 169 | - | 0 |
| 553 | -.040 | - | - | - | - | 7 | - | 170 | - | 0 |
| 554 | -.040 | - | - | - | - | 7 | - | 171 | - | 0 |
| 555 | -.040 | - | - | - | - | 7 | - | 172 | - | 0 |

TOTAL NUMBER OF SUBTASKS = 10

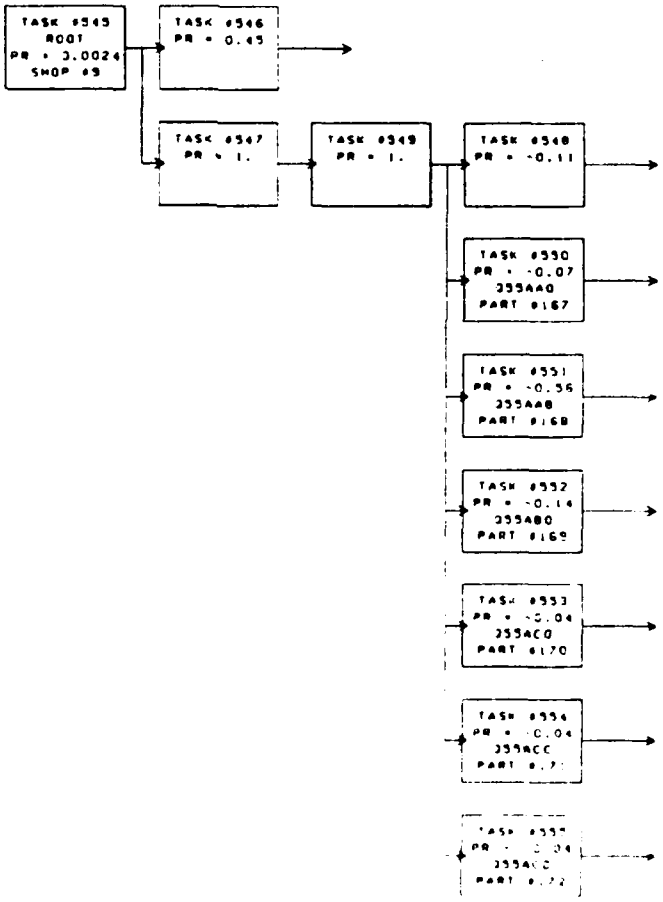


FIGURE 60

III.1.5.60 TASK #556 NETWORK -

55C** -- ENGINE TIME/TEMPERATURE RECORDER

| SUBTASK | PROB | PERSONNEL TEAM 1 TYP | TEAM 1 # | TEAM 2 TYP | TEAM 2 # | AGE #1 | AGE #2 | PART NO | TIME | DIS |
|---|---|---|---|---|---|---|---|---|---|---|
| 557 | .920 | 9 | 1 | - | - | - | - | - | 48 | 0 |
| 558 | 1.000 | 9 | 1 | - | - | 11 | - | - | 69 | 0 |
| 559 | .820 | 9 | 1 | - | - | 7 | - | 173 | - | 0 |

TOTAL NUMBER OF SUBTASKS = 3

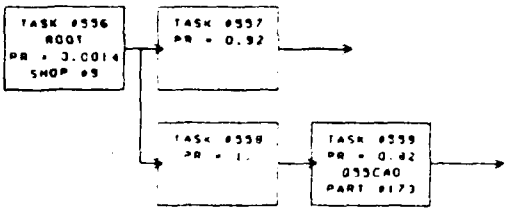


FIGURE 61

III 1.5.61 TASK #560 NETWORK -

62A** -- VHF/FM COMMUNICATION SYSTEM

| SUBTASK | PROB | PERSONNEL TEAM 1 TYP | TEAM 1 # | TEAM 2 TYP | TEAM 2 # | AGE #1 | AGE #2 | PART NO | TIME | DIS |
|---|---|---|---|---|---|---|---|---|---|---|
| 561 | .100 | - | - | - | - | - | - | 174 | - | 0 |
| 562 | -.530 | 12 | 2 | - | - | - | - | 175 | - | 0 |
| 563 | -.050 | - | - | - | - | - | - | 176 | - | 0 |
| 564 | -.050 | - | - | - | - | - | - | 177 | - | 0 |

TOTAL NUMBER OF SUBTASKS = 4

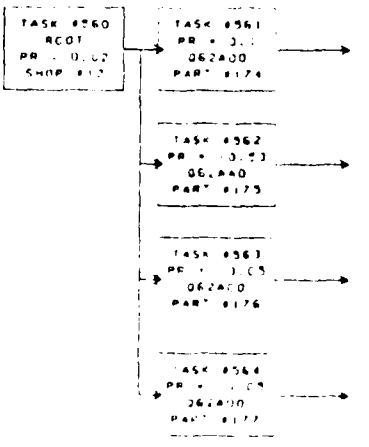


FIGURE 62

III.1.5.62 TASK #565 NETWORK -

62C** -- VHF/AM COMMUNICATION SYSTEM

| SUBTASK | PROB | PERSONNEL TEAM 1 TYP | TEAM 1 # | TEAM 2 TYP | TEAM 2 # | AGE #1 | AGE #2 | PART NO | TIME | DIS |
|---|---|---|---|---|---|---|---|---|---|---|
| 566 | -.550 | 12 | 2 | - | - | - | - | 178 | - | 0 |
| 567 | -.180 | - | - | - | - | - | - | 179 | - | 0 |

TOTAL NUMBER OF SUBTASKS = 2

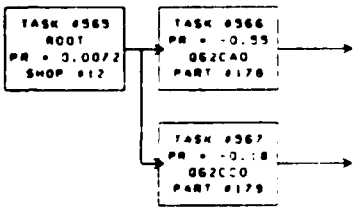


FIGURE 63

III.1.5.63 TASK #568 NETWORK -

62D** -- VHF/AM COMMUNICATION SYSTEM

| SUBTASK | PROB | PERSONNEL TEAM 1 TYP | TEAM 1 # | TEAM 2 TYP | TEAM 2 # | AGE #1 | AGE #2 | PART NO | TIME | DIS |
|---|---|---|---|---|---|---|---|---|---|---|
| 569 | -.440 | 12 | 2 | - | - | - | - | 180 | - | 0 |
| 570 | -.210 | 12 | 2 | - | - | - | - | 181 | | 0 |

TOTAL NUMBER OF SUBTASKS = 2

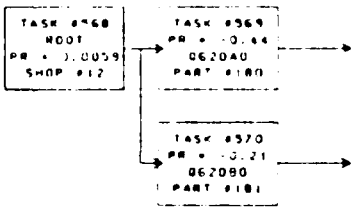


FIGURE 64

III.1.5.64 TASK #571 NETWORK -

63A** -- UHF COMMUNICATION SYSTEM

| SUBTASK | PROB | PERSONNEL TEAM 1 TYP | TEAM 1 # | TEAM 2 TYP | TEAM 2 # | AGE #1 | AGE #2 | PART NO | TIME | DIS |
|---|---|---|---|---|---|---|---|---|---|---|
| 572 | .100 | - | - | - | - | - | - | 182 | - | 0 |
| 573 | -.280 | 12 | 2 | - | - | - | - | 183 | - | 0 |
| 574 | -.200 | 12 | 2 | - | - | - | - | 184 | - | 0 |
| 575 | -.040 | - | - | - | - | - | - | 185 | - | 0 |

TOTAL NUMBER OF SUBTASKS = 4

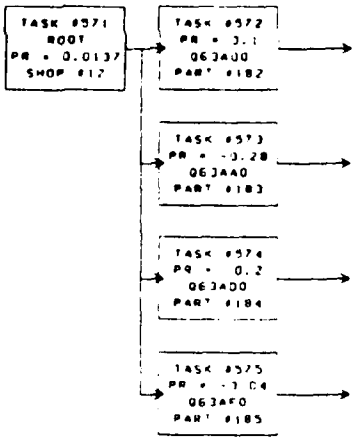


FIGURE 65

III 1.5.65 TASK #576 NETWORK -

64A** -- INTERCOMMUNICATION SYSTEM

| SUBTASK | PROB | PERSONNEL TEAM 1 TYP | TEAM 1 # | TEAM 2 TYP | TEAM 2 # | AGE #1 | AGE #2 | PART NO. | TIME | DIS |
|---|---|---|---|---|---|---|---|---|---|---|
| 577 | -.160 | 12 | 2 | - | - | - | - | 186 | 48 | 0 |
| 578 | -.120 | 12 | 2 | - | - | - | - | 187 | 108 | 0 |

TOTAL NUMBER OF SUBTASKS = 2

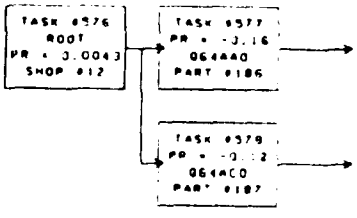


FIGURE 66

III.1.5.66 TASK #579 NETWORK -

65A** -- TRANSPONDER SET

| SUBTASK | PROB | PERSONNEL TEAM 1 TYP | TEAM 1 # | TEAM 2 TYP | TEAM 2 # | AGE #1 | AGE #2 | PART NO | TIME | DIS |
|---|---|---|---|---|---|---|---|---|---|---|
| 580 | -.990 | 13 | 2 | - | - | 11 | - | - | 276 | 0 |
| 581 | -.010 | 18 | 1 | - | - | - | - | - | 18 | 0 |
| 582 | .190 | - | - | - | - | - | - | 188 | - | 0 |
| 583 | -.170 | 13 | 2 | - | - | - | - | 189 | - | 0 |
| 584 | -.070 | - | - | - | - | - | - | 190 | - | 0 |

TOTAL NUMBER OF SUBTASKS = 5

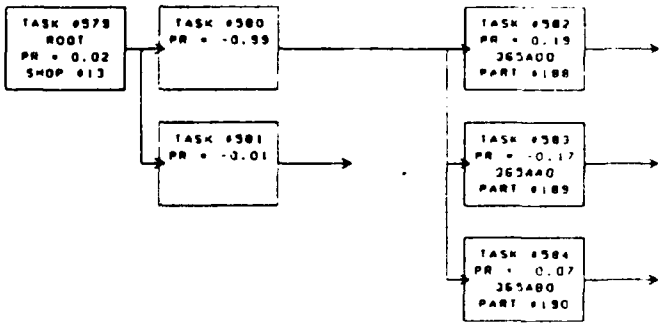


FIGURE 67

III.1.5.67 TASK #585 NETWORK -

71C** -- NAV MODE CONTROLS

| SUBTASK | PROB | PERSONNEL TEAM 1 TYP | TEAM 1 # | TEAM 2 TYP | TEAM 2 # | AGE #1 | AGE #2 | PART NO. | TIME | DIS |
|---|---|---|---|---|---|---|---|---|---|---|
| 586 | -.420 | 13 | 1 | - | - | - | - | 191 | - | 0 |
| 587 | -.170 | 13 | 1 | - | - | - | - | 192 | - | 0 |

TOTAL NUMBER OF SUBTASKS = 2

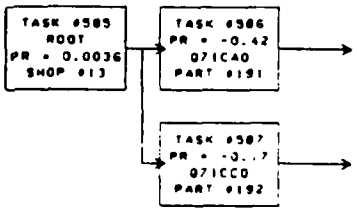


FIGURE 68

III.1.5.68 TASK #588 NETWORK -

71D** -- INSTRUMENT LANDING SYSTEMS

| SUBTASK | PROB | PERSONNEL TEAM 1 TYP | TEAM 1 # | TEAM 2 TYP | TEAM 2 # | AGE #1 | AGE #2 | PART NO | TIME | DIS |
|---|---|---|---|---|---|---|---|---|---|---|
| 589 | .330 | 13 | 2 | - | - | - | - | 193 | - | 0 |

TOTAL NUMBER OF SUBTASKS = 1

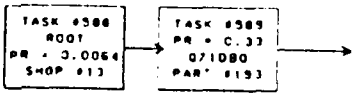


FIGURE 69

III.1.5.69 TASK #590 NETWORK -

71Z** -- TACAN SYSTEM

| SUBTASK | PROB | PERSONNEL TEAM 1 TYP | TEAM 1 # | TEAM 2 TYP | TEAM 2 # | AGE #1 | AGE #2 | PART NO | TIME | DIS |
|---|---|---|---|---|---|---|---|---|---|---|
| 591 | -.230 | 13 | 2 | - | - | - | - | 194 | - | 0 |
| 592 | -.080 | 13 | 2 | - | - | - | - | 195 | - | 0 |
| 593 | -.180 | 13 | 2 | - | - | - | - | 196 | - | 0 |

TOTAL NUMBER OF SUBTASKS = 3

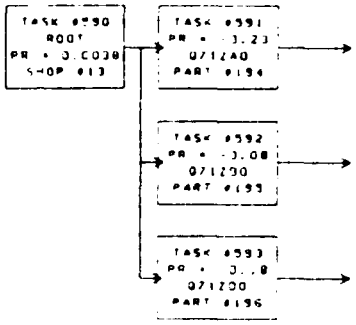


FIGURE 70

III.1.5.70 TASK #594 NETWORK -

72A** -- RADAR NAVIGATION

| SUBTASK | PROB | PERSONNEL TEAM 1 TYP | TEAM 1 # | TEAM 2 TYP | TEAM 2 # | AGE #1 | AGE #2 | PART NO | TIME | DIS |
|---|---|---|---|---|---|---|---|---|---|---|
| 595 | .500 | 13 | 1 | - | - | - | - | 197 | - | 0 |

TOTAL NUMBER OF SUBTASKS = 1

FIGURE 71

III 1.5.71 TASK #596 NETWORK -

74A** -- HEAD-UP DISPLAY SYSTEM

| SUBTASK | PROB | PERSONNEL TEAM 1 TYP | TEAM 1 # | TEAM 2 TYP | TEAM 2 # | AGE #1 | AGE #2 | PART NO. | TIME | DIS |
|---|---|---|---|---|---|---|---|---|---|---|
| 597 | .220 | 16 | 1 | - | - | - | - | 198 | 102 | 0 |
| 598 | -.290 | 16 | 2 | - | - | - | - | 199 | 90 | 0 |
| 599 | -.230 | 16 | 2 | - | - | - | - | 200 | - | 0 |
| 600 | -.130 | 16 | 1 | - | - | - | - | 201 | - | 0 |

TOTAL NUMBER OF SUBTASKS = 4

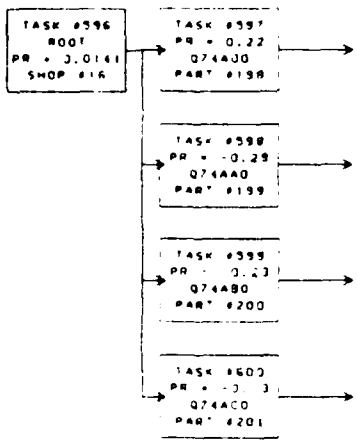


FIGURE 72

III.1.5.72 TASK #601 NETWORK -

74C** -- TARGET IDENTIFICATION SET, PAVE PENNY

| SUBTASK | PROB | PERSONNEL TEAM 1 TYP | TEAM 1 # | TEAM 2 TYP | TEAM 2 # | AGE #1 | AGE #2 | PART NO. | TIME | DIS |
|---|---|---|---|---|---|---|---|---|---|---|
| 602 | 1.000 | 10 | 2 | - | - | - | - | - | 72 | 0 |
| 603 | .070 | 10 | 2 | - | - | - | - | - | 72 | 0 |
| 604 | -.980 | 10 | 2 | - | - | 11 | - | - | 180 | 0 |
| 605 | -.020 | 18 | 1 | - | - | - | - | - | 30 | 0 |
| 606 | .130 | - | - | - | - | - | - | 202 | - | 0 |
| 607 | -.540 | - | - | - | - | - | - | 203 | - | 0 |
| 608 | -.100 | 10 | 2 | - | - | - | - | 204 | - | 0 |

TOTAL NUMBER OF SUBTASKS = 7

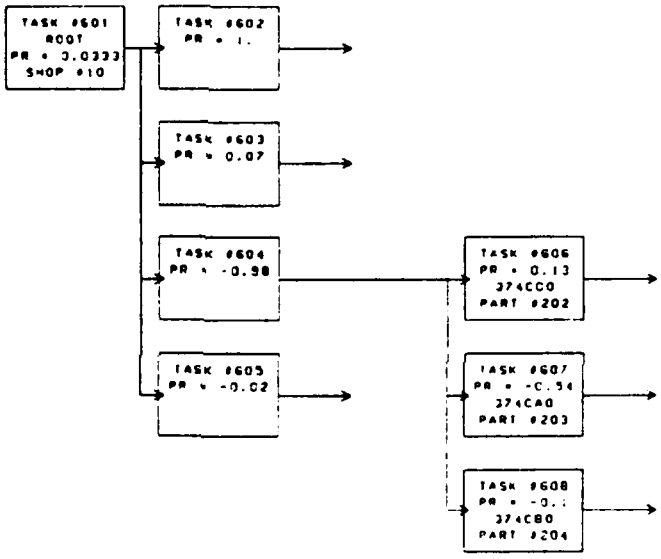


FIGURE 73

III.1.5.73 TASK #609 NETWORK -

74D** -- GUN CAMERA SYSTEM

| SUBTASK | PROB | PERSONNEL TEAM 1 TYP | TEAM 1 # | TEAM 2 TYP | TEAM 2 # | AGE #1 | AGE #2 | PART NO. | TIME | DIS |
|---|---|---|---|---|---|---|---|---|---|---|
| 610 | .730 | 20 | 1 | - | - | - | - | - | 168 | 0 |
| 611 | -.870 | 20 | 1 | - | - | 11 | - | - | 204 | 0 |
| 612 | -.130 | 20 | 2 | - | - | - | - | - | 222 | 0 |
| 613 | -.150 | - | - | - | - | - | - | 205 | - | 0 |
| 614 | -.150 | - | - | - | - | - | - | 206 | - | 0 |
| 615 | -.230 | - | - | - | - | - | - | 207 | - | 0 |

TOTAL NUMBER OF SUBTASKS = 6

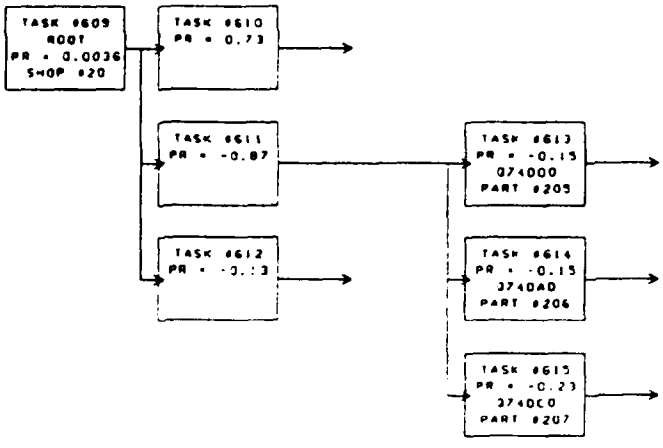


FIGURE 74

III.1.5.74 TASK #616 NETWORK -

74E** -- TV MONITOR SYSTEM

| SUBTASK | PROB | PERSONNEL TEAM 1 TYP | TEAM 1 # | TEAM 2 TYP | TEAM 2 # | AGE #1 | AGE #2 | PART NO. | TIME | DIS |
|---|---|---|---|---|---|---|---|---|---|---|
| 617 | .140 | 20 | 1 | - | - | - | - | - | 420 | C |
| 618 | 1.000 | 16 | 2 | - | - | 11 | - | - | 276 | O |
| 619 | .110 | - | - | - | - | - | - | 208 | - | O |
| 620 | -.170 | 16 | 2 | - | - | - | - | 209 | - | O |
| 621 | -.110 | 16 | 2 | - | - | - | - | 210 | - | C |

TOTAL NUMBER OF SUBTASKS = 5

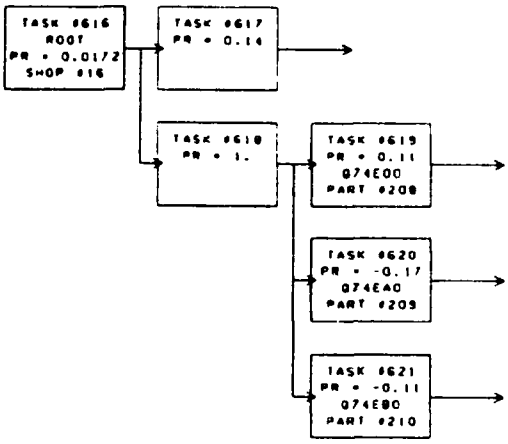


FIGURE 75

III.1.5.75 TASK #622 NETWORK -

74F** -- TV MONITOR SYSTEM (HARTMAN)

| SUBTASK | PROB | PERSONNEL TEAM 1 TYP | TEAM 1 # | TEAM 2 TYP | TEAM 2 # | AGE #1 | AGE #2 | PART NO. | TIME | DIS |
|---|---|---|---|---|---|---|---|---|---|---|
| 623 | -.500 | 16 | 1 | - | - | - | - | 211 | - | 0 |
| 624 | -.500 | 16 | 1 | - | - | - | - | 212 | - | 0 |

TOTAL NUMBER OF SUBTASKS = 2

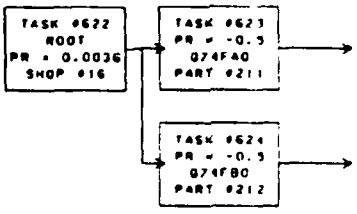


FIGURE 76

III.1.5.76 TASK #625 NETWORK -

75A** -- GUN SYSTEM, 30MM

| SUBTASK | PROB | PERSONNEL TEAM 1 TYP | TEAM 1 # | TEAM 2 TYP | TEAM 2 # | AGE #1 | AGE #2 | PART NO. | TIME | DIS |
|---|---|---|---|---|---|---|---|---|---|---|
| 626 | .010 | 25 | 2 | - | - | - | - | - | 72 | 0 |
| 627 | 1.000 | 17 | 3 | - | - | - | - | - | 54 | 0 |
| 628 | .350 | 17 | 3 | - | - | - | - | - | 54 | 0 |
| 629 | -.920 | 17 | 3 | - | - | 21 | - | - | 252 | 0 |
| 630 | -.070 | 18 | 1 | - | - | - | - | - | 66 | 0 |
| 631 | -.010 | 2 | 1 | - | - | - | - | - | 162 | 0 |
| 632 | -.140 | - | - | - | - | - | - | 213 | - | 0 |
| 633 | -.040 | - | - | - | - | - | - | 214 | - | 0 |
| 634 | -.020 | - | - | - | - | - | - | 215 | - | 0 |
| 635 | -.070 | - | - | - | - | - | - | 216 | - | 0 |
| 636 | -.170 | - | - | - | - | - | - | 217 | - | 0 |
| 637 | -.010 | - | - | - | - | - | - | 218 | - | 0 |
| 638 | -.010 | - | - | - | - | - | - | 219 | - | 0 |
| 639 | -.020 | - | - | - | - | - | - | 220 | - | 0 |
| 640 | -.020 | - | - | - | - | - | - | 221 | - | 0 |
| 641 | -.010 | 17 | 3 | - | - | - | - | 222 | - | 0 |
| 642 | -.010 | - | - | - | - | - | - | 223 | - | 0 |

TOTAL NUMBER OF SUBTASKS = 17

RESOURCE REQUIREMENTS
AIRCRAFT, PART AND SUPPORT EQUIPMENT REPAIR DATA

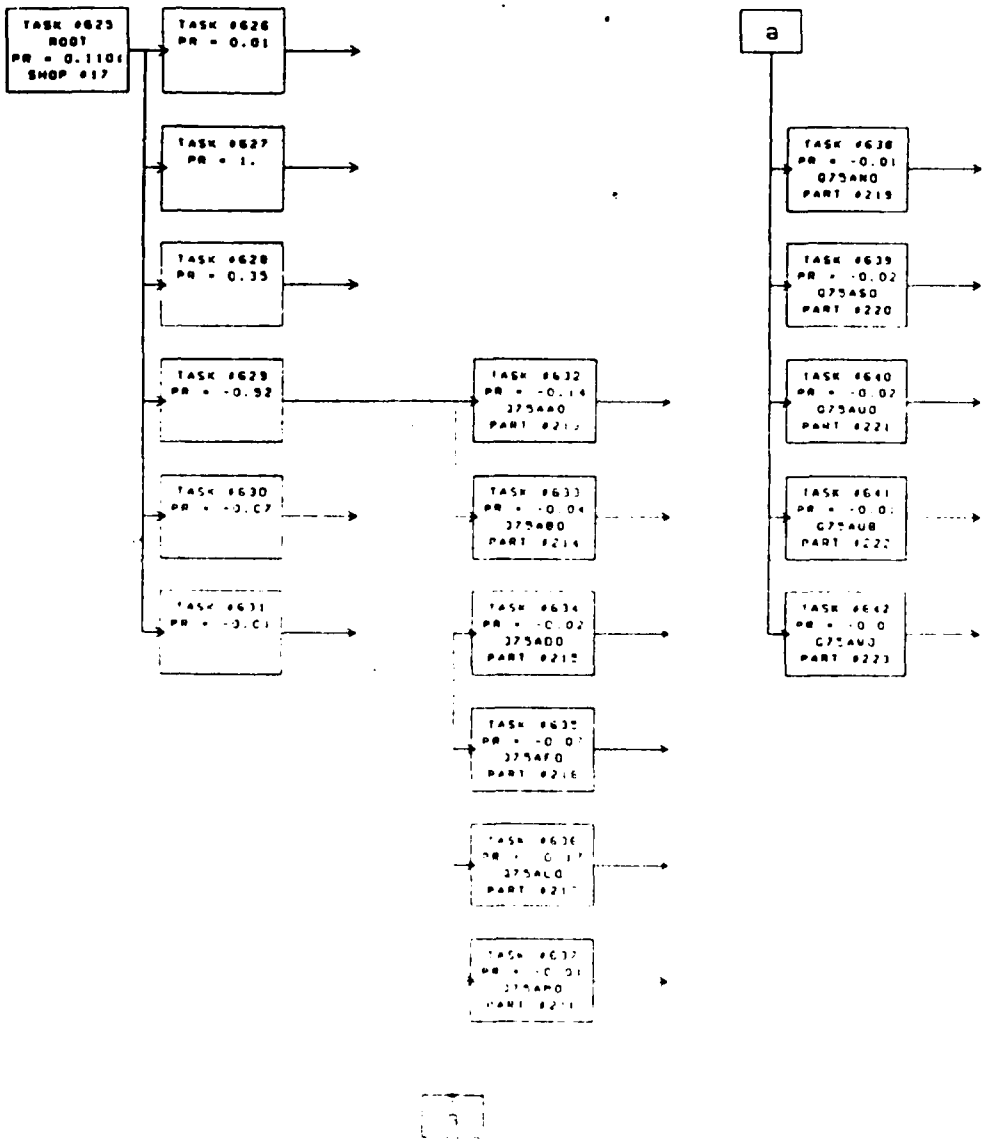


FIGURE 77

III.1.5 77 TASK #643 NETWORK -

75B** -- ARMAMENT CONTROL SYSTEM

| SUBTASK | PROB | PERSONNEL TEAM 1 TYP | TEAM 1 # | TEAM 2 TYP | TEAM 2 # | AGE #1 | AGE #2 | PART NO | TIME | DIS |
|---|---|---|---|---|---|---|---|---|---|---|
| 644 | 1.000 | 17 | 3 | - | - | - | - | - | 54 | 0 |
| 645 | .550 | 17 | 3 | - | - | - | - | - | 54 | 0 |
| 646 | 1.000 | 17 | 3 | - | - | 11 | - | - | 108 | 0 |
| 647 | .130 | - | - | - | - | - | - | 224 | - | 0 |
| 648 | -.220 | 17 | 3 | - | - | - | - | 225 | - | 0 |
| 649 | -.010 | 17 | 3 | - | - | - | - | 226 | - | 0 |
| 650 | -.320 | 17 | 3 | - | - | - | - | 227 | - | 0 |
| 651 | -.090 | 17 | 3 | - | - | - | - | 228 | - | 0 |
| 652 | -.020 | - | - | - | - | - | - | 229 | - | 0 |

TOTAL NUMBER OF SUBTASKS = 9

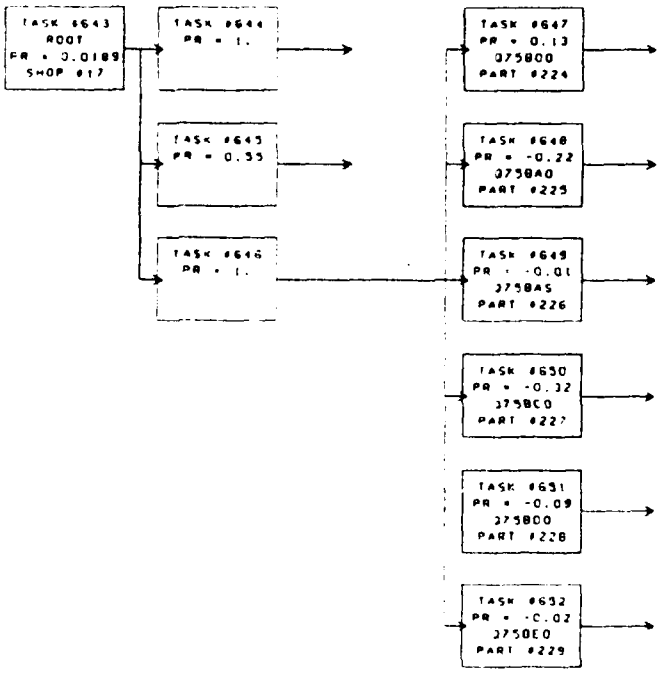


FIGURE 78

III.1.5.78 TASK #653 NETWORK -

75C** -- EXTERNAL ARMAMENT SYSTEM

| SUBTASK | PROB | PERSONNEL TEAM 1 TYP | TEAM 1 # | TEAM 2 TYP | TEAM 2 # | AGE #1 | AGE #2 | PART NO | TIME | DIS |
|---|---|---|---|---|---|---|---|---|---|---|
| 654 | 1.000 | 17 | 3 | - | - | - | - | - | 84 | 0 |
| 655 | .130 | 17 | 3 | - | - | - | - | - | 84 | 0 |
| 656 | -.330 | 18 | 1 | - | - | - | - | - | 30 | 0 |
| 657 | -.270 | 2 | 1 | - | - | - | - | - | 162 | 0 |
| 658 | -.400 | 17 | 3 | - | - | - | - | - | 93 | 0 |
| 659 | .610 | - | - | - | - | - | - | 230 | - | 0 |
| 660 | -.040 | - | - | - | - | - | - | 231 | - | 0 |
| 661 | -.320 | 17 | 3 | - | - | - | - | 232 | - | 0 |
| 662 | -.110 | - | - | - | - | - | - | 233 | - | 0 |
| 663 | -.070 | - | - | - | - | - | - | 234 | - | 0 |

TOTAL NUMBER OF SUBTASKS = 10

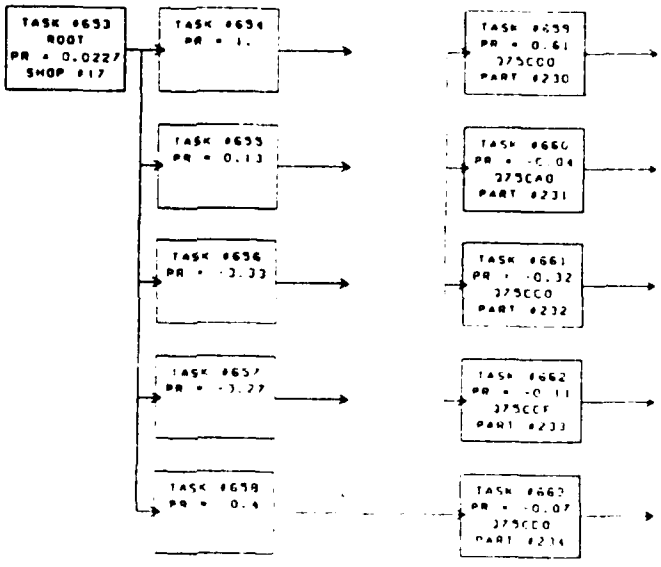


FIGURE 79

III.1.5.79 TASK #664 NETWORK -

75D** -- CABLE ADAPTERS

| SUBTASK | PROB | PERSONNEL TEAM 1 TYP | TEAM 1 # | TEAM 2 TYP | TEAM 2 # | AGE #1 | AGE #2 | PART NO | TIME | DIS |
|---|---|---|---|---|---|---|---|---|---|---|
| 665 | .040 | 17 | 1 | - | - | - | - | 235 | - | 0 |
| 666 | -.430 | 17 | 1 | - | - | - | - | 236 | - | 0 |
| 667 | -.540 | 17 | 1 | - | - | - | - | 237 | - | 0 |

TOTAL NUMBER OF SUBTASKS = 3

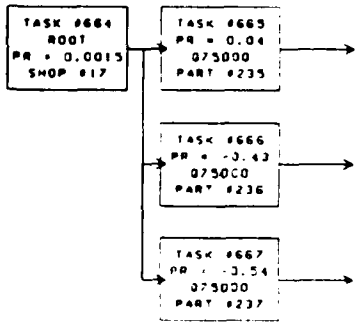


FIGURE 80

III.1.5.80 TASK #668 NETWORK -

75F** -- RACKS

| SUBTASK | PROB | PERSONNEL TEAM 1 TYP | TEAM 1 # | TEAM 2 TYP | TEAM 2 # | AGE #1 | AGE #2 | PART NO | TIME | DIS |
|---|---|---|---|---|---|---|---|---|---|---|
| 669 | -.060 | 18 | 1 | - | - | - | - | - | 24 | 0 |
| 670 | -.020 | 26 | 1 | - | - | - | - | - | 15 | 0 |
| 671 | -.920 | 17 | 3 | - | - | - | - | - | 54 | 0 |
| 672 | -.330 | - | - | - | - | - | - | 238 | - | 0 |
| 673 | -.070 | - | - | - | - | - | - | 239 | - | 0 |
| 674 | -.380 | - | - | - | - | - | - | 240 | - | 0 |

TOTAL NUMBER OF SUBTASKS = 6

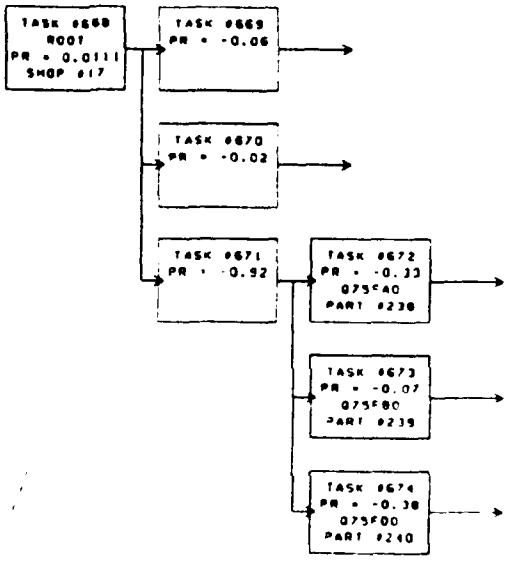


FIGURE 81

III.1.5.81 TASK #675 NETWORK -

76A** -- ELECTRONIC COUNTERMEASURE

| SUBTASK | PROB | PERSONNEL TEAM 1 TYP | TEAM 1 # | TEAM 2 TYP | TEAM 2 # | AGE #1 | AGE #2 | PART NO. | TIME | DIS |
|---|---|---|---|---|---|---|---|---|---|---|
| 676 | .330 | 14 | 2 | - | - | - | - | - | 84 | 0 |
| 677 | -.990 | 14 | 2 | - | - | 11 | - | - | 126 | 0 |
| 678 | -.010 | 18 | 2 | - | - | - | - | - | 42 | 0 |
| 679 | -.090 | - | - | - | - | - | - | 241 | - | 0 |
| 680 | -.060 | - | - | - | - | - | - | 242 | - | 0 |
| 681 | -.020 | - | - | - | - | - | - | 243 | - | 0 |
| 682 | -.060 | - | - | - | - | - | - | 244 | - | 0 |
| 683 | -.020 | - | - | - | - | - | - | 245 | - | 0 |

TOTAL NUMBER OF SUBTASKS = 8

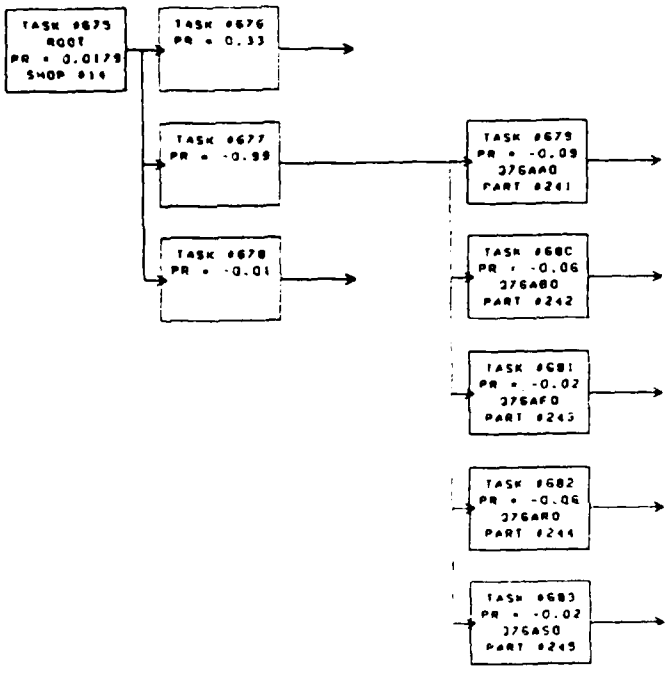


FIGURE 82

III.1.5.82 TASK #684 NETWORK -

76POD -- ELECTRONIC COUNTERMEASURE POD

| SUBTASK | PROB | PERSONNEL TEAM 1 TYP | TEAM 1 # | TEAM 2 TYP | TEAM 2 # | AGE #1 | AGE #2 | PART NO | TIME | DIS |
|---|---|---|---|---|---|---|---|---|---|---|
| 685 | .830 | 14 | 3 | - | - | - | - | 246 | 96 | 0 |

TOTAL NUMBER OF SUBTASKS = 1

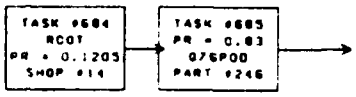


FIGURE 83

III.1.5.83 TASK #686 NETWORK -

76E** - COMPASS TIE SYSTEM AN/ALR-69

| SUBTASK | PROB | PERSONNEL TEAM 1 TYP | TEAM 1 # | TEAM 2 TYP | TEAM 2 # | AGE #1 | AGE #2 | PART NO. | TIME | DIS |
|---|---|---|---|---|---|---|---|---|---|---|
| 687 | .060 | 14 | 2 | - | - | - | - | 247 | - | 0 |

TOTAL NUMBER OF SUBTASKS = 1

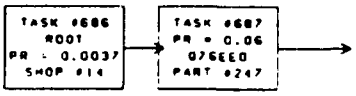


FIGURE 84

III.1.5.84 TASK #688 NETWORK -

91B** -- PARACHUTE SYSTEM

| SUBTASK | PROB | PERSONNEL TEAM 1 TYP | TEAM 1 # | TEAM 2 TYP | TEAM 2 # | AGE #1 | AGE #2 | PART NO. | TIME | DIS |
|---|---|---|---|---|---|---|---|---|---|---|
| 689 | .110 | 4 | 2 | - | - | - | - | - | 12 | 0 |
| 690 | 1.000 | 4 | 2 | - | - | - | - | - | 6 | 0 |
| 691 | -.130 | 5 | 2 | - | - | - | - | - | 120 | 0 |
| 692 | -.760 | 4 | 2 | - | - | - | - | - | 96 | 0 |
| 693 | .750 | - | - | - | - | - | - | - | - | 0 |
| 694 | -.170 | - | - | - | - | 18 | - | 248 | - | 0 |
| 695 | -.500 | 4 | 1 | - | - | 18 | - | 249 | - | 0 |

TOTAL NUMBER OF SUBTASKS = 7

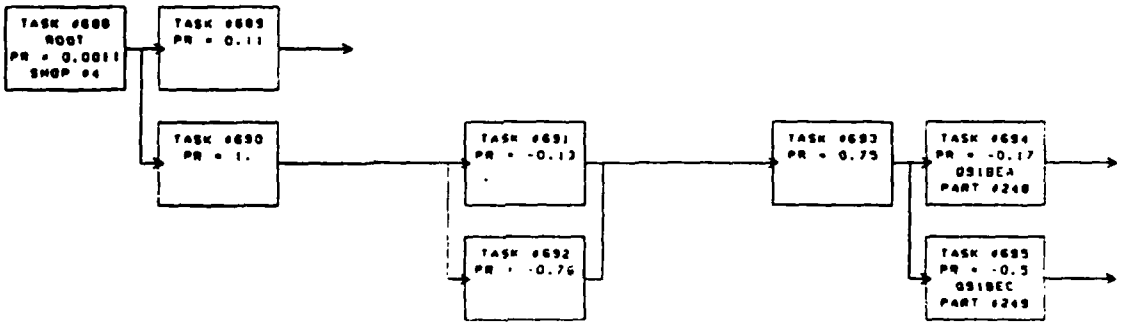


FIGURE 85

III.1.5.85 SIMPLE TASKS - #700, #701, AND #705 -

| SUBTASK | PROB | PERSONNEL TEAM 1 TYP | TEAM 1 # | TEAM 2 TYP | TEAM 2 # | AGE #1 | AGE #2 | PART NO. | TIME | DIS | DESCRIPTION |
|---|---|---|---|---|---|---|---|---|---|---|---|
| 700 | SCHED | 1 | 3 | - | - | 80 | - | - | 15 | - | REFUEL |
| 701 | SCHED | 1 | 2 | - | - | 21 | - | 12916 | 18 | - | LOAD GUN |
| 705 | SCHED | 1 | 2 | - | - | 1 | - | - | 15 | - | HOT PIT |

** THESE ARE SIMPLE TASKS, THEREFORE NO NETWORKS FOLLOW

III.1.5.86 TASK #800 NETWORK -

100 HR PHASED MAINTENANCE

| SUBTASK | PROB | PERSONNEL TEAM 1 TYP | TEAM 1 # | TEAM 2 TYP | TEAM 2 # | AGE #1 | AGE #2 | PART NO | TIME | DIS |
|---|---|---|---|---|---|---|---|---|---|---|
| 801 | SCHED | 7 | 1 | - | - | 6 | - | - | 15 | 0 |
| 802 | SCHED | 7 | 1 | - | - | 6 | - | - | 20 | 0 |
| 803 | SCHED | 4 | 1 | - | - | - | - | - | 10 | 0 |
| 804 | SCHED | 4 | 1 | - | - | - | - | - | 10 | 0 |
| 805 | SCHED | 4 | 1 | - | - | - | - | - | 10 | 0 |

TOTAL NUMBER OF SUBTASKS = 5

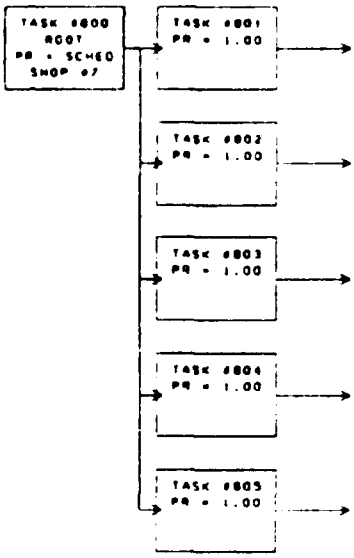


FIGURE 86

III.1.5.87 SIMPLE TASKS - 806, 809, 810, 811, 812 -

| SUBTASK | PROB | PERSONNEL TEAM 1 TYP | TEAM 1 # | TEAM 2 TYP | TEAM 2 # | AGE #1 | AGE #2 | PART NO. | TIME | DIS | DESCRIPTION |
|---|---|---|---|---|---|---|---|---|---|---|---|
| 806 | SCHED | 17 | 2 | - | - | - | - | - | 90 | 0 | 36000 RDS GUN BARREL |
| 809 | SCHED | 17 | 2 | - | - | - | - | - | 30 | 0 | 3000 RDS GUN INSPECT |
| 810 | SCHED | 17 | 2 | - | - | - | - | - | 60 | 0 | 6000 RDS GUN INSPECT |
| 811 | SCHED | 17 | 2 | - | - | - | - | - | 1440 | 0 | 25000 RDS GUN INSPECT |
| 812 | SCHED | 4 | 1 | - | - | - | - | - | 120 | 0 | 200 HR OXY PURGE |

** THESE ARE SIMPLE TASKS, THEREFORE NO NETWORKS FOLLOW

III.1.5.88 AIRCRAFT BATTLE DAMAGE REPAIR -

III.1.5.88.1 BATTLE DAMAGE TASK DATA -

(CARD TYPES #5 AND #15/2)

| | | PERSONNEL | | | | | | | | |
|---|---|---|---|---|---|---|---|---|---|---|
| | | TEAM 1 | | TEAM 2 | | AGE | | PART | | |
| SUBTASK | PROB | TYP | # | TYP | # | #1 | #2 | NO | TIME | DIS |
| 711 | .030 | 41 | 6 | - | - | - | - | - | 4800 | 0 |
| 712 | .050 | 41 | 5 | - | - | - | - | - | 2400 | 0 |
| 713 | .040 | 41 | 2 | - | - | - | - | - | 2400 | 0 |
| 714 | .120 | 41 | 4 | - | - | - | - | - | 1200 | 0 |
| 715 | .200 | 41 | 3 | - | - | - | - | - | 600 | 0 |
| 716 | .120 | 41 | 6 | - | - | - | - | - | 300 | 0 |
| 717 | .640 | 41 | 2 | - | - | - | - | - | 240 | 0 |
| 718 | 1.000 | 41 | 1 | - | - | - | - | - | 120 | 0 |

III.1.5.88.2 AIRBASE DAMAGED AIRCRAFT TASK DATA -

(CARD TYPES #5 AND #15/2)

| | | PERSONNEL | | | | | | | | |
|---|---|---|---|---|---|---|---|---|---|---|
| | | TEAM 1 | | TEAM 2 | | AGE | | PART | | |
| SUBTASK | PROB | TYP | # | TYP | # | #1 | #2 | NO. | TIME | DIS |
| 719 | .030 | 41 | 6 | - | - | - | - | - | 2700 | 0 |
| 720 | .050 | 41 | 5 | - | - | - | - | - | 1950 | 0 |
| 721 | .040 | 41 | 2 | - | - | - | - | - | 1350 | 0 |
| 722 | .120 | 41 | 4 | - | - | - | - | - | 750 | 0 |
| 723 | .200 | 41 | 3 | - | - | - | - | - | 450 | 0 |
| 724 | .120 | 41 | 6 | - | - | - | - | - | 150 | 0 |
| 725 | .640 | 41 | 2 | - | - | - | - | - | 120 | 0 |
| 726 | 1.000 | 41 | 1 | - | - | - | - | - | 75 | 0 |

III.1.5.89 MUNITIONS ASSEMBLY DATA -

(CARD TYPES #11/1 AND #11/2)

| TYPE MUNITION | TIME (MIN) | PERSONNEL TYPE | PERSONNEL # | AGE #1 | AGE #2 | QUANTITY | PERSONNEL SUITABILITY |
|---|---|---|---|---|---|---|---|
| 2 | 150 | 22 | 3 | - | - | 3 | 0 |
| 5 | 72 | 30 | 3 | - | - | 12 | 1 |
| 6 | 132 | 30 | 3 | - | - | 12 | 1 |
| 7 | 156 | 30 | 3 | - | - | 6 | 1 |
| 8 | 132 | 30 | 3 | - | - | 12 | 1 |
| 9 | 96 | 50 | 3 | - | - | 6 | 0 |
| 10 | 243 | 50 | 3 | - | - | 2 | 0 |
| 11 | 198 | 50 | 3 | - | - | 6 | 0 |
| 12 | 210 | 30 | 3 | - | - | 6 | 1 |
| 13 | 201 | 22 | 3 | - | - | 4 | 0 |
| 14 | 120 | 22 | 3 | - | - | 4 | 0 |
| 18 | 66 | 30 | 3 | - | - | 6 | 1 |
| 19 | 66 | 30 | 3 | - | - | 6 | 1 |
| 20 | 66 | 30 | 3 | - | - | 6 | 1 |

III.1.5.90 MUNITIONS LOADING DATA -

(CARD TYPE #13)

| SCL | CONFIG | MUNITION TYPE | MUNITION QUAN | TIME (MIN) | PERSONNEL TYPE | PERSONNEL # | AGE #1 | AGE #2 |
|---|---|---|---|---|---|---|---|---|
| 5 | 3 | 5 | 4 | 10 | 28 | 4 | 20 | - |
| 5 | 3 | 9 | - | -- | 28 | 4 | 20 | - |
| 6 | 3 | 12 | 6 | 27 | 28 | 4 | 20 | - |
| 7 | 1 | 11 | 2 | 30 | 28 | 4 | 20 | - |
| 9 | 2 | 5 | 6 | 24 | 28 | 4 | 20 | - |
| 10 | 2 | 6 | 6 | 24 | 28 | 4 | 20 | - |
| 11 | 2 | 8 | 8 | 33 | 28 | 4 | 20 | - |
| 12 | 2 | 8 | 6 | 24 | 28 | 4 | 20 | - |
| 13 | 2 | 8 | 4 | 15 | 28 | 4 | 20 | - |
| 14 | 2 | 5 | 4 | 15 | 28 | 4 | 20 | - |
| 15 | 2 | 7 | 2 | 15 | 28 | 4 | 20 | - |
| 16 | 2 | 18 | 4 | 15 | 28 | 4 | 20 | - |

## III.1.6 PART REPAIR DATA (CARD TYPE #8)

### III.1.6.1 LRU #1 -

11AFO - WINDSHIELD ASSEMBLY

| REPAIR PROC | ITEM PROB | TIME MIN. | PERSONNEL TYPE | PERSONNEL NO | AGE #1 | AGE #2 |
|---|---|---|---|---|---|---|
| 250 | .42 | 240 | 82 | 2 | - | - |
| 251 | .58 | 114 | 82 | 1 | - | - |

TOTAL NUMBER OF PART REPAIR PROCEDURES = 2

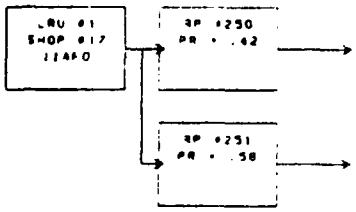


FIGURE 87

### III.1.6.2 SIMPLE PART REPAIR TASKS #2 - #16 -

| LRU NO. | PART DESCRIPTION | SHOP | TIME MIN | PERSONNEL TYPE | PERSONNEL # | AGE #1 | AGE #2 |
|---|---|---|---|---|---|---|---|
| 2 | GLASS, SD WINDSH | 17 | 210 | 82 | 2 | - | - |
| 3 | BALLAST, VARIABLE | 17 | 60 | 82 | 2 | - | - |
| 4 | F2, OXY CONVERTER | 17 | 90 | 82 | 2 | - | - |
| 5 | SAFING/GUN ACCESS | 17 | 46 | 82 | 2 | - | - |
| 6 | ARMAMENT CB ACCESS | 17 | 486 | 82 | 2 | - | - |
| 7 | AVIONICS ACCESS | 17 | 168 | 82 | 1 | - | - |
| 8 | INVERTER RELAY ACC | 17 | 702 | 82 | 2 | - | - |
| 9 | BATTERY ACCESS | 17 | 1038 | 82 | 1 | - | - |
| 10 | LADDER COMPARTMENT | 17 | 150 | 82 | 1 | - | - |
| 11 | AVIONICS ACCESS | 17 | 120 | 82 | 1 | - | - |
| 12 | FUSELAGE, CENTER | 2 | 78 | 82 | 1 | - | - |
| 13 | ELECT TROUGH ACCESS | 2 | 78 | 82 | 1 | - | - |
| 14 | FUSELAGE, AFT | 2 | 120 | 82 | 1 | - | - |
| 15 | ECS/FUEL ACCESS | 2 | 120 | 82 | 1 | - | - |
| 16 | AUX POWER UNIT ACC | 2 | 120 | 82 | 1 | - | - |

** THESE ARE SIMPLE REPAIR PROCED., THEREFORE NO NETWORKS FOLLOW

III.1.6.3 LRU #17 -

11DOO - WING ASSEMBLY

| REPAIR PROC | ITEM PROB | TIME MIN. | PERSONNEL TYPE | PERSONNEL NO | AGE #1 | AGE #2 |
|---|---|---|---|---|---|---|
| 252 | .28 | 1278 | 82 | 2 | - | - |
| 253 | .72 | 498 | 82 | 1 | - | - |

TOTAL NUMBER OF PART REPAIR PROCEDURES = 2

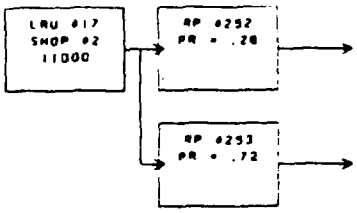


FIGURE 88

III.1.6.4 SIMPLE PART REPAIR TASKS #18 - #24 -

| LRU NO. | PART DESCRIPTION | SHOP | TIME MIN. | PERSONNEL TYPE | PERSONNEL # | AGE #1 | AGE #2 |
|---|---|---|---|---|---|---|---|
| 18 | LOW PANEL ACC RT | 2 | 366 | 82 | 1 | - | - |
| 19 | LOW PANEL ACC LF | 2 | 366 | 82 | 1 | - | - |
| 20 | ACC PANEL OUTBOARD | 2 | 474 | 82 | 1 | - | - |
| 21 | EMPENNAGE | 2 | 396 | 82 | 1 | - | - |
| 22 | COMPASS FLUX ACCESS | 2 | 300 | 82 | 2 | - | - |
| 23 | RUDDER HINGE ACC LF | 2 | 498 | 82 | 1 | - | - |
| 24 | RUDDER HINGE ACC RT | 2 | 1200 | 82 | 1 | - | - |

** THESE ARE SIMPLE REPAIR PROCED., THEREFORE NO NETWORKS FOLLOW

III.1.6.5 LRU #25 -

11F00 - ENGINE NACELLE, L.H./R.H.

| REPAIR PROC | ITEM PROB | TIME MIN | PERSONNEL TYPE | PERSONNEL NO | AGE #1 | AGE #2 |
|---|---|---|---|---|---|---|
| 254 | 20 | 150 | 82 | 2 | - | - |
| 255 | .80 | 108 | 82 | 1 | - | - |

TOTAL NUMBER OF PART REPAIR PROCEDURES = 2

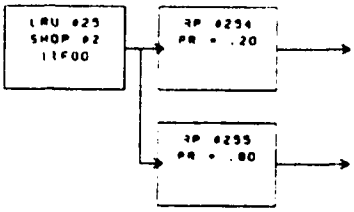


FIGURE 89

III.1.6.6 SIMPLE PART REPAIR TASKS #26 - #31 -

| LRU NO. | PART DESCRIPTION | SHOP | TIME MIN. | PERSONNEL TYPE | PERSONNEL # | AGE #1 | AGE #2 |
|---|---|---|---|---|---|---|---|
| 26 | ENGINE LINE QAD ACC | 2 | 228 | 82 | 1 | - | - |
| 27 | COCKPIT | 2 | 60 | 82 | 1 | - | - |
| 28 | BOTTLE ASSEM, VACUUM | 2 | 258 | 82 | 1 | - | - |
| 29 | GLARESHIELD, MAIN | 2 | 402 | 82 | 1 | - | - |
| 30 | ANTI-REF SHIELD | 2 | 300 | 82 | 1 | - | - |
| 31 | LADDER, CREW BOARD | 1 | 1002 | 82 | 2 | - | - |

** THESE ARE SIMPLE REPAIR PROCED., THEREFORE NO NETWORKS FOLLOW

III.1.6.7 LRU #32 -

12GGA - ACTUATOR ASSEMBLY, CANOPY

| REPAIR PROC | ITEM PROB | TIME MIN. | PERSONNEL TYPE | PERSONNEL NO | AGE #1 | AGE #2 |
|---|---|---|---|---|---|---|
| 256 | .43 | 213 | 83 | 1 | - | - |
| 257 | .57 | 228 | 83 | 2 | - | - |

TOTAL NUMBER OF PART REPAIR PROCEDURES = 2

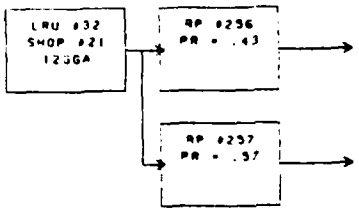


FIGURE 90

III.1.6.8 SIMPLE PART REPAIR TASKS #34 - #37 -

| LRU NO. | PART DESCRIPTION | SHOP | TIME MIN. | PERSONNEL TYPE | PERSONNEL # | AGE #1 | AGE #2 |
|---|---|---|---|---|---|---|---|
| 34 | TIRE, NOSE LAND | 1 | 120 | 11 | 1 | - | - |
| 35 | MAIN LAND GEAR | 21 | 228 | 82 | 1 | - | - |
| 36 | ACT, MAIN LAND GEAR | 21 | 264 | 86 | 2 | - | - |
| 37 | ACT, NOSE LAND GEAR | 1 | 72 | 86 | 2 | - | - |

** THESE ARE SIMPLE REPAIR PROCED . THEREFORE NO NETWORKS FOLLOW

III.1.6.9 LRU #38 -

13C00 - NOSE WHEEL STEERING SYSTEM

| REPAIR PROC | ITEM PROB | TIME MIN | PERSONNEL TYPE | PERSONNEL NO | AGE #1 | AGE #2 |
|---|---|---|---|---|---|---|
| 258 | .50 | 120 | 86 | 2 | - | - |
| 259 | .50 | 96 | 83 | 1 | - | - |

TOTAL NUMBER OF PART REPAIR PROCEDURES = 2

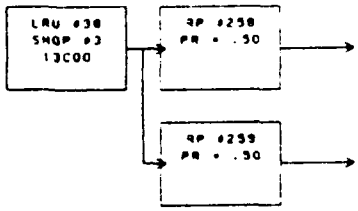


FIGURE 91

III.1.6.10 SIMPLE PART REPAIR TASKS #39 - #47 -

| LRU NO. | PART DESCRIPTION | SHOP | TIME MIN. | PERSONNEL TYPE | PERSONNEL # | AGE #1 | AGE #2 |
|---|---|---|---|---|---|---|---|
| 39 | BRAKE ASSEMBLY | 3 | 180 | 82 | 1 | - | - |
| 40 | ANTI-SKID SYS | 3 | 30 | 83 | 1 | - | - |
| 41 | CNTL UNIT, ANTI-SK | 3 | 30 | 83 | 1 | - | - |
| 42 | PANEL, LND GR CNTL | 3 | 180 | 83 | 1 | - | - |
| 43 | VALVE, LND GR CNTL | 3 | 90 | 86 | 2 | - | - |
| 44 | EMERG FLIGHT CNTL | 3 | 294 | 83 | 1 | - | - |
| 45 | ACT, AILERON | 21 | 72 | 86 | 2 | - | - |
| 46 | ACT, SERVO TAB SH | 21 | 150 | 83 | 1 | - | - |
| 47 | ACT, TRIM STEPPER | 21 | 60 | 83 | 1 | - | - |

** THESE ARE SIMPLE REPAIR PROCED., THEREFORE NO NETWORKS FOLLOW

III.1.6.11 LRU #48 -

14E00 - PITCH CONTROL SYSTEM

| REPAIR PROC | ITEM PROB | TIME MIN. | PERSONNEL TYPE | PERSONNEL NO | AGE #1 | AGE #2 |
|---|---|---|---|---|---|---|
| 260 | .33 | 90 | 82 | 1 | - | - |
| 261 | .67 | 60 | 83 | 1 | - | - |

TOTAL NUMBER OF PART REPAIR PROCEDURES = 2

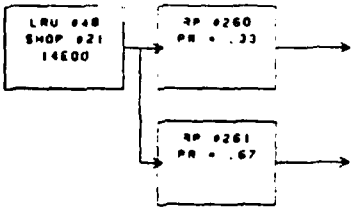


FIGURE 92

III.1.6.12 SIMPLE PART REPAIR TASK #49 -

| LRU NO | PART DESCRIPTION | SHOP | TIME MIN. | PERSONNEL TYPE | PERSONNEL # | AGE #1 | AGE #2 |
|---|---|---|---|---|---|---|---|
| 49 | ELEV ASSEMBLY | 21 | 270 | 82 | 1 | - | - |

** THIS IS A SIMPLE REPAIR PROCED., THEREFORE NO NETWORK FOLLOW

III.1.6.13 LRU #50 -

14EAA - TAE TRIM

| REPAIR PROC | ITEM PROB | TIME MIN | PERSONNEL TYPE | PERSONNEL NO | AGE #1 | AGE #2 |
|---|---|---|---|---|---|---|
| 262 | 67 | 126 | 83 | 1 | - | - |
| 263 | 33 | 630 | 82 | 1 | - | - |

TOTAL NUMBER OF PART REPAIR PROCEDURES = 2

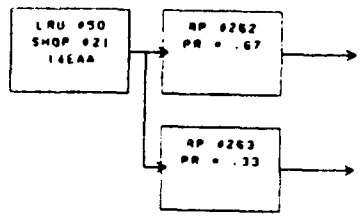


FIGURE 93

III.1.6.14 SIMPLE PART REPAIR TASKS #51 - #62 -

| LRU NO. | PART DESCRIPTION | SHOP | TIME MIN. | PERSONNEL TYPE | PERSONNEL # | AGE #1 | AGE #2 |
|---|---|---|---|---|---|---|---|
| 51 | TORQUE, ELEV ACT | 21 | 90 | 82 | 1 | - | - |
| 52 | ACT, ELEVATOR | 21 | 150 | 86 | 2 | - | - |
| 53 | ACT, PITCH TRIM | 21 | 7899 | 83 | 1 | - | - |
| 54 | ACT, PTCH TRIM TAB | 21 | 384 | 83 | 1 | - | - |
| 55 | RUDDER ASSEMBLY | 21 | 510 | 82 | 2 | - | - |
| 56 | ACT, RUDDER | 21 | 72 | 86 | 2 | - | - |
| 57 | FLAP ASSY, INBOARD | 21 | 1422 | 82 | 1 | - | - |
| 58 | FLAP ASSY, OUTBOARD | 21 | 798 | 82 | 1 | - | - |
| 59 | ACT, FLAP | 21 | 72 | 86 | 2 | - | - |
| 60 | SLAT ASSEMBLY | 21 | 162 | 82 | 1 | - | - |
| 61 | ACT, SLAT | 21 | 216 | 86 | 2 | - | - |
| 62 | VALVE, ASSY, CNTL | 21 | 72 | 86 | 2 | - | - |

** THESE ARE SIMPLE REPAIR PROCED., THEREFORE NO NETWORKS FOLLOW

III.1.6.15 LRU #63 -

23000 - TURBO FAN POWER PLANT

| REPAIR PROC | ITEM PROB | TIME MIN | PERSONNEL TYPE | PERSONNEL NO | AGE #1 | AGE #2 |
|---|---|---|---|---|---|---|
| 264 | .97 | 48. | 87 | 4 | - | - |
| 265 | .03 | 03 | 87 | 1 | - | - |

TOTAL NUMBER OF PART REPAIR PROCEDURES = 2

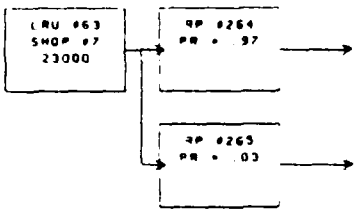


FIGURE 94

III.1.6.16 SIMPLE PART REPAIR TASKS #64 - #84 -

| LRU NO. | PART DESCRIPTION | SHOP | TIME MIN. | PERSONNEL TYPE | PERSONNEL # | AGE #1 | AGE #2 |
|---|---|---|---|---|---|---|---|
| 64 | AFT SHROUD DRN SEAL | 7 | 90 | 82 | 1 | - | - |
| 65 | SEAL ASSY, FAN AIR | 7 | 180 | 82 | 1 | - | - |
| 66 | ENGINE/NACELLE PYLON | 7 | 60 | 82 | 1 | - | - |
| 67 | FAN FORWARD CASING | 7 | 180 | 82 | 1 | - | - |
| 68 | INTERTURBINE SEAL | 7 | 90 | 82 | 1 | - | - |
| 69 | C-SUMP REAR COVER | 7 | 30 | 87 | 1 | - | - |
| 70 | MAIN FUEL CNTL | 7 | 30 | 87 | 1 | - | - |
| 71 | MAIN FUEL FILTER | 7 | 30 | 87 | 1 | - | - |
| 72 | AMP CNTL, T5 | 7 | 30 | 87 | 1 | - | - |
| 73 | OIL FILLER TUBE | 7 | 30 | 87 | 1 | - | - |
| 74 | LUBE FILTER ELEMENT | 7 | 30 | 87 | 1 | - | - |
| 75 | GENER, TACH CORE | 7 | 48 | 89 | 1 | - | - |
| 76 | INDIC, TACH CORE | 7 | 30 | 89 | 1 | - | - |
| 77 | INDIC, TACH FAN | 7 | 30 | 89 | 1 | - | - |
| 78 | INDIC, TURB TEMP | 7 | 48 | 89 | 1 | - | - |
| 79 | INDIC, FUEL FLOW LF | 7 | 30 | 89 | 1 | - | - |
| 80 | INDIC, FUEL FLOW RT | 7 | 30 | 89 | 1 | - | - |
| 81 | QUAD ASSY, ENGINE CN | 7 | 162 | 83 | 1 | - | - |
| 82 | FAN BLADE | 7 | 30 | 87 | 1 | - | - |
| 83 | START, AIR TURBINE | 7 | 30 | 87 | 1 | - | - |
| 84 | VALVE, ENGINE START | 7 | 30 | 87 | 1 | - | - |

** THESE ARE SIMPLE REPAIR PROCED., THEREFORE NO NETWORKS FOLLOW

III.1.6.17 LRU #85 -

24AFA - FUEL CONTROL

| REPAIR PROC | ITEM PROB | TIME MIN | PERSONNEL TYPE | PERSONNEL NO | AGE #1 | AGE #2 |
|---|---|---|---|---|---|---|
| 266 | .29 | 42 | 83 | 1 | - | - |
| 267 | .71 | 30 | 87 | 1 | - | - |

TOTAL NUMBER OF PART REPAIR PROCEDURES = 2

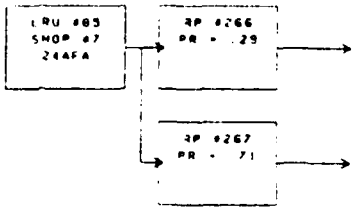


FIGURE 95

III.1.6.16 SIMPLE PART REPAIR TASKS #86 - #90 -

| LRU NO | PART DESCRIPTION | SHOP | TIME MIN | PERSONNEL TYPE | PERSONNEL # | AGE #1 | AGE #2 |
|---|---|---|---|---|---|---|---|
| 86 | CNTL, ELECTRONIC | 7 | 42 | 83 | 1 | - | - |
| 87 | THERMOCPL, EGT | 7 | 72 | 83 | 1 | - | - |
| 88 | PANEL, ENVIR CNTL | 4 | 120 | 84 | 2 | - | - |
| 89 | VALVE, TEMP CNTL | 4 | 60 | 84 | 2 | - | - |
| 90 | CNTL, CABIN TEMP CNT | 4 | 180 | 84 | 2 | - | - |

** THESE ARE SIMPLE REPAIR PROCED., THEREFORE NO NETWORKS FOLLOW

III.1.6.19 LRU #91 -

41B00 - AIR CONDITIONING SYSTEM

| REPAIR PROC | ITEM PROB | TIME MIN. | PERSONNEL TYPE | PERSONNEL NO | AGE #1 | AGE #2 |
|---|---|---|---|---|---|---|
| 268 | .20 | 225 | 82 | 1 | - | - |
| 269 | .80 | 75 | 84 | 2 | - | - |

TOTAL NUMBER OF PART REPAIR PROCEDURES = 2

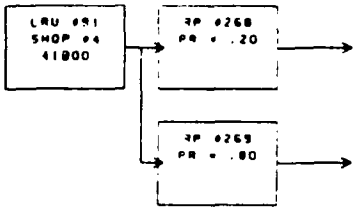


FIGURE 96

III 1 6 20 LRU #92 -

41BAA - AIR CYCLE MACHINE

| REPAIR PROC | ITEM PROB | TIME MIN. | PERSONNEL TYPE | PERSONNEL NO | AGE #1 | AGE #2 |
|---|---|---|---|---|---|---|
| 270 | .75 | 240 | 84 | 2 | - | - |
| 271 | .25 | 840 | 82 | 2 | - | - |

TOTAL NUMBER OF PART REPAIR PROCEDURES = 2

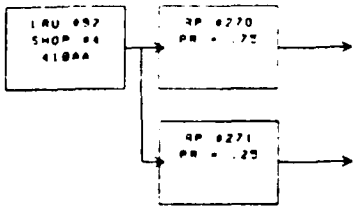


FIGURE 97

III.1.6.21 SIMPLE PART REPAIR TASKS #93 - #107 -

| LRU NO. | PART DESCRIPTION | SHOP | TIME MIN. | PERSONNEL TYPE | # | AGE #1 | #2 |
|---|---|---|---|---|---|---|---|
| 93 | HOUS/ASPIR ASSY | 4 | 180 | 82 | 1 | - | - |
| 94 | DUCTS, LF SERV AIR | 4 | 78 | 84 | 2 | - | - |
| 95 | OUT ASSY, CABIN AIR | 4 | 48 | 84 | 2 | - | - |
| 96 | VALVE, MANUAL CABIN | 4 | 30 | 84 | 2 | - | - |
| 97 | VALVE, PRESS REGUL | 4 | 150 | 84 | 2 | - | - |
| 98 | CNTL UNIT, ANTI-ICE | 3 | 42 | 83 | 1 | - | - |
| 99 | WASH SYSTEMS | 4 | 60 | 84 | 2 | - | - |
| 100 | PRESS REG, WASH SYS | 4 | 84 | 84 | 2 | - | - |
| 101 | AC POWER GENER SYS | 7 | 162 | 83 | 1 | - | - |
| 102 | INTEGR DRIVE GENER | 7 | 2382 | 83 | 1 | - | - |
| 103 | CNTL UNIT, GENER | 7 | 5286 | 83 | 1 | - | - |
| 104 | INVERTER, STANDBY | 3 | 60 | 83 | 1 | - | - |
| 105 | AC/DC DISTRIB SYS | 3 | 72 | 83 | 1 | - | - |
| 106 | BOX ASSY, MISC RELAY | 3 | 180 | 83 | 1 | - | - |
| 107 | BOX ASSY, CP AC PWR | 3 | 102 | 83 | 1 | - | - |

** THESE ARE SIMPLE REPAIR PROCED., THEREFORE NO NETWORKS FOLLOW

III.1.6.22 LRU #108 -

42FAE - BOX ASSEMBLY, FUEL/ENGINE RELAYS

| REPAIR PROC | ITEM PROB | TIME MIN | PERSONNEL TYPE | NO | AGE #1 | #2 |
|---|---|---|---|---|---|---|
| 272 | .50 | 102 | 83 | 1 | - | - |
| 273 | .50 | 162 | 83 | 2 | - | - |

TOTAL NUMBER OF PART REPAIR PROCEDURES = 2

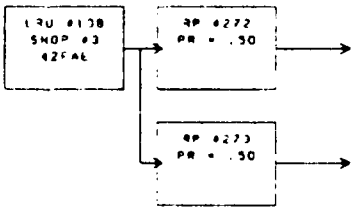


FIGURE 98

III.1.6.23 SIMPLE PART REPAIR TASKS #109 - #126 -

| LRU NO. | PART DESCRIPTION | SHOP | TIME MIN. | PERSONNEL TYPE | # | AGE #1 | #2 |
|---|---|---|---|---|---|---|---|
| 109 | BOX ASSY, LAND GEAR | 3 | 168 | 83 | 1 | - | - |
| 110 | CNTL PANEL, LIGHTS | 3 | 213 | 83 | 1 | - | - |
| 111 | PWR SPPY, STRB LGTS | 3 | 183 | 83 | 1 | - | - |
| 112 | LIGHT, LOW FUSELAGE | 3 | 144 | 83 | 1 | - | - |
| 113 | LGHT,FORM/TAIL FLOOD | 3 | 72 | 83 | 1 | - | - |
| 114 | INTERIOR LIGHT SYS | 3 | 84 | 83 | 1 | - | - |
| 115 | PANEL ASSY, AUX LGHT | 3 | 105 | 83 | 1 | - | - |
| 116 | PANEL, CAUTION ANN | 3 | 471 | 83 | 1 | - | - |
| 117 | UTILITY LIGHT | 3 | 51 | 83 | 1 | - | - |
| 118 | LF HYDRAU PWR SYS | 17 | 60 | 86 | 2 | - | - |
| 119 | PUMP, HYDR PWR SYS | 17 | 210 | 86 | 2 | - | - |
| 120 | VALVE, SYS SHUT OFF | 17 | 78 | 86 | 2 | - | - |
| 121 | ACCUM, BOOT STRAP | 17 | 72 | 86 | 2 | - | - |
| 122 | LF HYDR RESER ASSY | 17 | 336 | 86 | 2 | - | - |
| 123 | HOSE, PRESS.ENG/FUS | 17 | 72 | 86 | 2 | - | - |
| 124 | PUMP, HYDR ENG DRIV | 6 | 84 | 86 | 2 | - | - |
| 125 | RT HYDR RESER ASSY | 6 | 348 | 86 | 2 | - | - |
| 126 | PUMP, HYDR, 10 GPM | 6 | 72 | 86 | 2 | - | - |

** THESE ARE SIMPLE REPAIR PROCED.. THEREFORE NO NETWORKS FOLLOW

III.1.6.24 LRU #127 -

46AEO - PUMP ASSY, LEFT/RIGHT MAIN TANK

| REPAIR PROC | ITEM PROB | TIME MIN. | PERSONNEL TYPE | NO | AGE #1 | #2 |
|---|---|---|---|---|---|---|
| 274 | .09 | 231 | 23 | 2 | - | - |
| 275 | .91 | 180 | 23 | 1 | - | - |

TOTAL NUMBER OF PART REPAIR PROCEDURES = 2

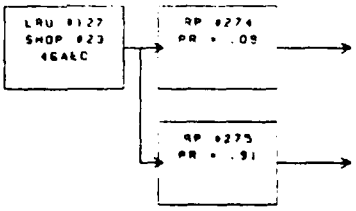


FIGURE 99

III.1.6.25 SIMPLE PART REPAIR TASKS #128 - #146 -

| LRU NO. | PART DESCRIPTION | SHOP | TIME MIN. | PERSONNEL TYPE | # | AGE #1 | #2 |
|---|---|---|---|---|---|---|---|
| 128 | RELAY, ELECTRICAL | 23 | 30 | 23 | 1 | - | - |
| 129 | AMP, SIGNAL | 23 | 90 | 23 | 1 | - | - |
| 130 | INDIC, FUEL QUANT | 9 | 102 | 23 | 1 | - | - |
| 131 | INTERMED DEVICE | 9 | 522 | 23 | 1 | - | - |
| 132 | PUMP, ASSY,TANK BST | 23 | 72 | 23 | 1 | - | - |
| 133 | VALVE, RT WING SHUT | 23 | 150 | 23 | 1 | - | - |
| 134 | CONN, AIRCRAFT ELEC | 4 | 501 | 89 | 1 | - | - |
| 135 | CONVERTER ASSY, LOX | 4 | 75 | 84 | 2 | - | - |
| 136 | CAP, BUILD-UP/VENT | 4 | 54 | 84 | 2 | - | - |
| 137 | REGULAT, DILUTER DEM | 4 | 120 | 84 | 2 | - | - |
| 138 | INDIC, LOX QUANTTITY | 4 | 48 | 89 | 2 | - | - |
| 140 | FIRE EXTINGUISH SYS | 3 | 60 | 84 | 2 | - | - |
| 141 | CANISTERS, EXTINGU | 3 | 78 | 84 | 2 | - | - |
| 142 | INSTRUMENTS | 15 | 537 | 78 | 2 | - | - |
| 143 | FLIGHT INSTRUMENTS | 9 | 48 | 89 | 1 | | - |
| 144 | ACCELEROMET, NORMAL | 9 | 318 | 89 | 1 | - | - |
| 145 | INDIC, STANDBY ATT | 9 | 804 | 89 | 1 | - | - |
| 146 | INDIC, ATT DIRECT | 9 | 453 | 89 | 1 | | - |

** THESE ARE SIMPLE REPAIR PROCED . THEREFORE NO NETWORKS FOLLOW

III.1.6.26 LRU #149 -

51CDK - COMPUTER TRANSDUCER-ALTITUDE

| REPAIR PROC | ITEM PROB | TIME MIN. | PERSONNEL TYPE | NO | AGE #1 | #2 |
|---|---|---|---|---|---|---|
| 276 | .75 | 78 | 89 | 1 | - | - |
| 277 | .25 | 60 | 84 | 2 | - | - |

TOTAL NUMBER OF PART REPAIR PROCEDURES = 2

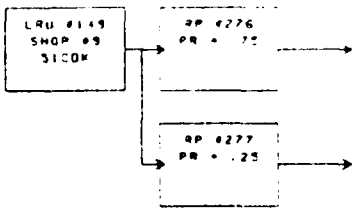


FIGURE 100

III.1.6.27 SIMPLE PART REPAIR TASKS #150 - #160 -

| LRU NO. | PART DESCRIPTION | SHOP | TIME MIN. | PERSONNEL TYPE | # | AGE #1 | #2 |
|---|---|---|---|---|---|---|---|
| 150 | INDIC, AIRSPEED | 9 | 264 | 89 | 1 | - | - |
| 152 | ALTIM, AAU-19/A | 9 | 360 | 89 | 1 | - | - |
| 153 | ALTIM, AAU-34/A | 9 | 318 | 89 | 1 | - | - |
| 154 | INDIC, ANGLE OF ATT | 9 | 150 | 89 | 1 | - | - |
| 155 | NAVIGAT INSTRUMENTS | 9 | 30 | 89 | 1 | - | - |
| 156 | CLOCK, AIRCRAFT | 9 | 789 | 89 | 1 | - | - |
| 157 | CNTL SET, GYRO ATT | 9 | 78 | 89 | 1 | - | - |
| 158 | GYRO, DISPLACEMENT | 9 | 495 | 89 | 1 | - | - |
| 159 | AMP, ELECT CNTL | 9 | 324 | 89 | 1 | - | - |
| 160 | CNTL, COMPASS SYS | 9 | 462 | 89 | 1 | - | - |

** THESE ARE SIMPLE REPAIR PROCED., THEREFORE NO NETWORKS FOLLOW

III 1.6.28 LRU #161 -

51FFO - DETECTOR, MAGNETIC AZIMUTH

| REPAIR PROC | ITEM PROB | TIME MIN. | PERSONNEL TYPE | NO | AGE #1 | #2 |
|---|---|---|---|---|---|---|
| 278 | .13 | 60 | 88 | 2 | - | - |
| 279 | .87 | 276 | 89 | 1 | - | - |

TOTAL NUMBER OF PART REPAIR PROCEDURES = 2

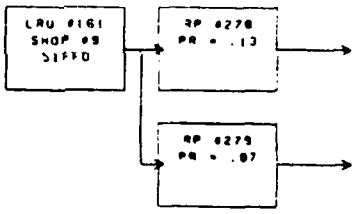


FIGURE 101

III.1.6.29 SIMPLE PART REPAIR TASKS #162 - #163 -

| LRU NO | PART DESCRIPTION | SHOP | TIME MIN | PERSONNEL TYPE | # | AGE #1 | #2 |
|---|---|---|---|---|---|---|---|
| 162 | INDIC. HORIZ SITUAT | 9 | 687 | 89 | 1 | - | - |
| 163 | COMPUTER | 8 | 561 | 88 | 1 | - | - |

** THESE ARE SIMPLE REPAIR PROCED., THEREFORE NO NETWORKS FOLLOW

III.1.6.30 LRU #164 -

52ACO - CONTROL PANEL, AUX FLIGHT

| REPAIR PROC | ITEM PROB | TIME MIN. | PERSONNEL TYPE | NO | AGE #1 | #2 |
|---|---|---|---|---|---|---|
| 280 | .80 | 150 | 88 | 1 | - | - |
| 281 | .20 | 180 | 88 | 2 | - | - |

TOTAL NUMBER OF PART REPAIR PROCEDURES = 2

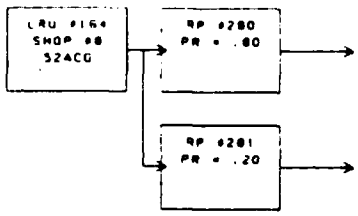


FIGURE 102

III.1.6.31 SIMPLE PART REPAIR TASKS #166 - #205 -

| LRU NO. | PART DESCRIPTION | SHOP | TIME MIN. | PERSONNEL TYPE | # | AGE #1 | #2 |
|---|---|---|---|---|---|---|---|
| 166 | COMPUTER, BETA DOT | 8 | 1206 | 88 | 1 | - | - |
| 167 | RECORD, SIGNAL DATA | 9 | 156 | 89 | 1 | - | - |
| 168 | MAGAZINE, RECORD | 9 | 90 | 89 | 1 | - | - |
| 169 | CONVERT/MULTIPLEXER | 9 | 90 | 89 | 1 | - | - |
| 170 | SENSING DEVICES | 9 | 102 | 89 | 1 | - | - |
| 171 | ACCELEROMET, NORMAL | 9 | 102 | 89 | 1 | - | - |
| 172 | ACCELEROMET, TRANSV | 9 | 102 | 89 | 1 | - | - |
| 173 | ENG TIME/TEMP RECOR | 9 | 1581 | 89 | 1 | - | - |
| 174 | VHF/FM COMMUNICAT | 12 | 30 | 80 | 1 | - | - |
| 175 | RADIO SET, REC/TRAN | 12 | 273 | 80 | 1 | - | - |
| 176 | CNTL, C-921/FM-622A | 12 | 102 | 80 | 1 | - | - |
| 177 | ANTENNA ASSY, BLADE | 12 | 216 | 80 | 1 | - | - |
| 178 | RADIO SET, REC/TRAN | 12 | 369 | 80 | 1 | - | - |
| 179 | CNTL UNIT, VHF/AM | 12 | 168 | 80 | 1 | - | - |
| 180 | RADIO SET, REC/TRAN | 12 | 360 | 80 | 1 | - | - |
| 181 | CNTL UNIT, C-10604 | 12 | 90 | 80 | 1 | - | - |
| 182 | UHF COMMUNICAT SYS | 12 | 84 | 80 | 1 | - | - |
| 183 | RADIO SET, REC/TRAN | 12 | 255 | 80 | 1 | - | - |
| 184 | DIRECT FINDER, UHF | 12 | 333 | 80 | 1 | - | - |
| 185 | REMOTE CHANNEL FREQ | 12 | 369 | 80 | 1 | - | - |
| 186 | CNTL, INTERCOMM SET | 12 | 324 | 80 | 1 | - | - |
| 187 | RELAY BOX, AVIONICS | 12 | 372 | 80 | 1 | - | - |
| 188 | TRANSPONDER SET | 13 | 30 | 81 | 1 | - | - |
| 189 | RECEIV/TRANSMITTER | 13 | 291 | 81 | 1 | - | - |
| 190 | CONTROL UNIT | 13 | 108 | 81 | 1 | - | - |
| 191 | PANEL, NAV MODE SEL | 13 | 132 | 81 | 1 | - | - |
| 192 | RELAY BOX, NAV MODE | 13 | 294 | 81 | 1 | - | - |
| 193 | RADIO RECEIVER | 13 | 219 | 81 | 1 | - | - |
| 194 | RECEIV/TRANSMITTER | 13 | 219 | 81 | 1 | - | - |
| 195 | ADAPTER, MX-9577/A | 13 | 204 | 81 | 1 | - | - |
| 196 | CNTL PANEL ARN-118 | 13 | 105 | 81 | 1 | - | - |
| 197 | ENCODER/TRANSPOND | 13 | 312 | 81 | 1 | - | - |
| 198 | HEAD-UP DISPLAY | 16 | 72 | 79 | 2 | - | - |
| 199 | PROJECT UNIT,HEADUP | 16 | 441 | 79 | 2 | - | - |
| 200 | SYMBOL GENERATOR | 16 | 231 | 79 | 2 | - | - |
| 201 | CONTROL UNIT | 16 | 153 | 79 | 2 | - | - |
| 202 | TARGET ID SET LASER | 10 | 372 | 90 | 1 | - | - |
| 203 | DETECT, LASER ILLUM | 10 | 1509 | 90 | 2 | - | - |
| 204 | ADAPTER, CNTL DETEC | 10 | 552 | 90 | 1 | - | - |
| 205 | GUN CAMERA SYSTEM | 20 | 108 | 20 | 1 | - | - |

** THESE ARE SIMPLE REPAIR PROCED., THEREFORE NO NETWORKS FOLLOW

III.1.6.32 LRU #206 -

74DAD - ELECTRONICS MODULE

| REPAIR PROC | ITEM PROB | TIME MIN. | PERSONNEL TYPE | PERSONNEL NO | AGE #1 | AGE #2 |
|---|---|---|---|---|---|---|
| 282 | .33 | 90 | 20 | 1 | - | - |
| 283 | .67 | 405 | 20 | 2 | - | - |

TOTAL NUMBER OF PART REPAIR PROCEDURES = 2

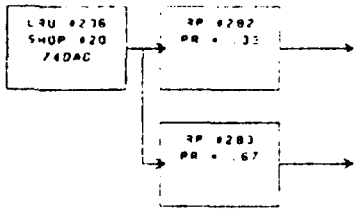


FIGURE 103

III.1.6.33 SIMPLE PART REPAIR TASKS #207, #208 -

| LRU NO. | PART DESCRIPTION | SHOP | TIME MIN | PERSONNEL TYPE | PERSONNEL # | AGE #1 | AGE #2 |
|---|---|---|---|---|---|---|---|
| 207 | MAGAZINE 100 FT | 20 | 33 | 20 | 1 | - | - |
| 208 | TV MONIT (CARDION) | 16 | 72 | 79 | 2 | - | - |

** THESE ARE SIMPLE REPAIR PROCED , THEREFORE NO NETWORKS FOLLOW

III.1.6.34 LRU #209 -

74EAO - TV MONITOR INSTALLATION (CARDION)

| REPAIR PROC | ITEM PROB | TIME MIN. | PERSONNEL TYPE | PERSONNEL NO | AGE #1 | AGE #2 |
|---|---|---|---|---|---|---|
| 284 | .62 | 234 | 79 | 2 | - | - |
| 285 | .38 | 357 | 79 | 1 | - | - |

TOTAL NUMBER OF PART REPAIR PROCEDURES = 2

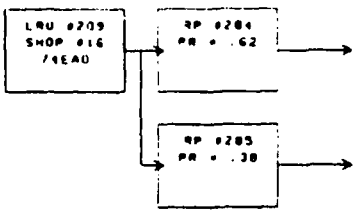


FIGURE 104

III.1.6.35 LRU #210 -

74EBO - CONTROL UNIT, FIRE CONTROL

| REPAIR PROC | ITEM PROB | TIME MIN. | PERSONNEL TYPE | PERSONNEL NO | AGE #1 | AGE #2 |
|---|---|---|---|---|---|---|
| 286 | .57 | 159 | 79 | 1 | - | - |
| 287 | .43 | 264 | 79 | 2 | - | - |

TOTAL NUMBER OF PART REPAIR PROCEDURES = 2

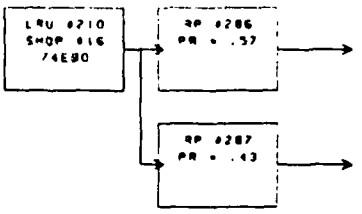


FIGURE 105

RESOURCE REQUIREMENTS
AIRCRAFT, PART AND SUPPORT EQUIPMENT REPAIR DATA

III.1.6.36 SIMPLE PART REPAIR TASKS #211 - #227 -

| LRU NO. | PART DESCRIPTION | SHOP | TIME MIN. | PERSONNEL TYPE | # | AGE #1 | #2 |
|---|---|---|---|---|---|---|---|
| 211 | DISPLAY UNIT, TV | 16 | 996 | 79 | 2 | - | - |
| 212 | CNTL UNIT, TV MONIT | 16 | 258 | 79 | 2 | - | - |
| 213 | GUN, 30 MM | 17 | 585 | 27 | 2 | - | - |
| 214 | DRUM, AMMUNITION | 17 | 1002 | 27 | 2 | - | - |
| 215 | GUN, 30 MM, OTHER | 17 | 120 | 27 | 2 | - | - |
| 216 | ACC UNIT, WEAPON | 17 | 75 | 27 | 2 | - | - |
| 217 | BELT, CONVEYOR | 17 | 468 | 27 | 2 | - | - |
| 218 | WEAPON DELIV.OTHER | 17 | 111 | 27 | 2 | - | - |
| 219 | WEAPON DELIV.OTHER | 17 | 600 | 27 | 2 | - | - |
| 220 | ELECT CNTL UNIT | 17 | 132 | 27 | 2 | - | - |
| 221 | DRIVE SYSTEM | 17 | 252 | 27 | 2 | - | - |
| 223 | TRANSFER UNIT | 17 | 147 | 27 | 2 | - | - |
| 224 | ARMAMENT CNTL SYS | 17 | 114 | 27 | 2 | - | - |
| 225 | PANEL, ARMAM CNTL | 17 | 144 | 27 | 2 | - | - |
| 227 | INTERSTAT CNTL UNIT | 17 | 129 | 27 | 2 | - | - |

** THESE ARE SIMPLE REPAIR PROCED . THEREFORE NO NETWORKS FOLLOW

III 1.6 37 LRU #228 -

75BDO - WEAPON DELIVERY, OTHER

| REPAIR PROC | ITEM PROB | TIME MIN. | PERSONNEL TYPE | NO | AGE #1 | #2 |
|---|---|---|---|---|---|---|
| 288 | ..83 | 159 | 27 | 1 | - | - |
| 289 | .17 | 135 | 27 | 2 | - | - |

TOTAL NUMBER OF PART REPAIR PROCEDURES = 2

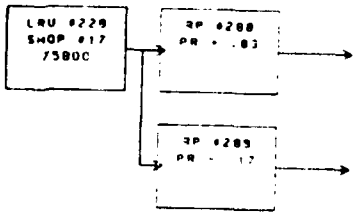


FIGURE 106

III.1.6.38 SIMPLE PART REPAIR TASK #229 -

| LRU NO. | PART DESCRIPTION | SHOP | TIME MIN. | PERSONNEL TYPE | # | AGE #1 | #2 |
|---|---|---|---|---|---|---|---|
| 229 | WEAPON DELIV,OTHER | 17 | 264 | 27 | 1 | - | - |

** THIS IS A SIMPLE REPAIR PROCED.,THEREFORE NO NETWORK WILL FOLLOW

III 1.6.39 LRU #230 -

75C00 - EXTERNAL ARMAMENT SYSTEM

| REPAIR PROC | ITEM PROB | TIME MIN. | PERSONNEL TYPE | NO | AGE #1 | #2 |
|---|---|---|---|---|---|---|
| 290 | .35 | 324 | 82 | 1 | - | - |
| 291 | .65 | 456 | 27 | 2 | - | - |

TOTAL NUMBER OF PART REPAIR PROCEDURES = 2

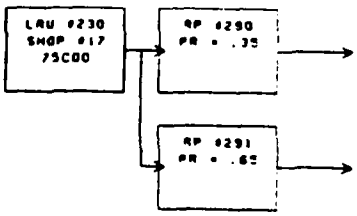


FIGURE 107

III.1.6.40 SIMPLE PART REPAIR TASK #231 -

| LRU NO. | PART DESCRIPTION | SHOP | TIME MIN. | PERSONNEL TYPE | PERSONNEL # | AGE #1 | AGE #2 |
|---|---|---|---|---|---|---|---|
| 231 | PYLON,STAT 1 & 11 | 17 | 360 | 82 | 1 | - | - |

** THIS IS A SIMPLE REPAIR PROCED..THEREFORE NO NETWORK WILL FOLLOW

III.1.6.41 LRU #232 -

75CCO - PYLON, WING WEAPON STATION 2 & 10

| REPAIR PROC | ITEM PROB | TIME MIN. | PERSONNEL TYPE | PERSONNEL NO | AGE #1 | AGE #2 |
|---|---|---|---|---|---|---|
| 292 | .79 | 183 | 27 | 2 | - | - |
| 293 | .21 | 90 | 82 | 1 | - | - |

TOTAL NUMBER OF PART REPAIR PROCEDURES = 2

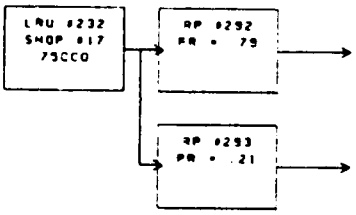


FIGURE 108

III.1.6.42 SIMPLE PART REPAIR TASK #233 -

| LRU NO. | PART DESCRIPTION | SHOP | TIME MIN. | PERSONNEL TYPE | # | AGE #1 | #2 |
|---|---|---|---|---|---|---|---|
| 233 | SEAL ASSY, PYLON | 17 | 282 | 82 | 1 | - | - |

** THIS IS A SIMPLE REPAIR PROCED.,THEREFORE NO NETWORK WILL FOLLOW

III.1.6.43 LRU #234 -

75CDO - PYLON, WING WEAPON STATION 4 & 8

| REPAIR PROC | ITEM PROB | TIME MIN. | PERSONNEL TYPE | NO | AGE #1 | #2 |
|---|---|---|---|---|---|---|
| 294 | .67 | 420 | 27 | 2 | - | - |
| 295 | .33 | 90 | 82 | 1 | - | - |

TOTAL NUMBER OF PART REPAIR PROCEDURES = 2

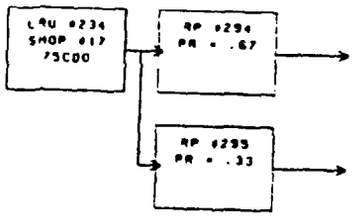


FIGURE 109

III.1.6.44 SIMPLE PART REPAIR TASKS #235 - #239 -

| LRU NO. | PART DESCRIPTION | SHOP | TIME MIN. | PERSONNEL TYPE | # | AGE #1 | #2 |
|---|---|---|---|---|---|---|---|
| 235 | CABLE ADAPTERS | 17 | 72 | 27 | 2 | - | - |
| 236 | TER-9 ADAPTERS | 17 | 405 | 27 | 2 | - | - |
| 237 | LAU-88 ADAPTER | 17 | 324 | 27 | 2 | - | - |
| 238 | BOMB RACK, MAU-40 | 17 | 186 | 27 | 2 | - | - |
| 239 | BOMB RACK, MAU-50 | 17 | 69 | 27 | 2 | - | - |

** THESE ARE SIMPLE REPAIR PROCED., THEREFORE NO NETWORKS FOLLOW

III.1.6 45 LRU #240 -

75FDO - TRIPLE-EJECTOR RACK, TER-9A

| REPAIR PROC | ITEM PROB | TIME MIN. | PERSONNEL TYPE | NO | AGE #1 | #2 |
|---|---|---|---|---|---|---|
| 296 | .99 | 183 | 27 | 2 | - | - |
| 297 | .01 | 90 | 82 | 2 | - | - |

TOTAL NUMBER OF PART REPAIR PROCEDURES = 2

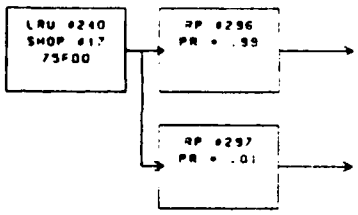


FIGURE 110

III.1.6.46 SIMPLE PART REPAIR TASKS #241 - 251 -

| LRU NO. | PART DESCRIPTION | SHOP | TIME MIN. | PERSONNEL TYPE | # | AGE #1 | #2 |
|---|---|---|---|---|---|---|---|
| 241 | SIGNAL PROCESSOR | 14 | 120 | 85 | 2 | - | - |
| 242 | AMP, DETECTORS | 14 | 558 | 85 | 2 | - | - |
| 243 | INDIC, AZIMUTH | 14 | 120 | 85 | 2 | - | - |
| 244 | COMPASS SAIL AMP | 14 | 225 | 85 | 2 | - | - |
| 245 | INDICAT, CNTL | 14 | 252 | 85 | 2 | - | - |
| 246 | ECM POD | 14 | 498 | 85 | 2 | - | - |
| 248 | CYLINDER ASSY | 4 | 60 | 84 | 2 | - | - |
| 250 | TIRE, MAIN LAND,LF | 1 | 120 | 11 | 1 | - | - |
| 251 | TIRE, MAIN LAND,RT | 1 | 120 | 11 | 1 | - | - |

** THESE ARE SIMPLE REPAIR PROCED., THEREFORE NO NETWORKS FOLLOW

## III.1.7 TASK TIME MODIFIERS

(CARD TYPE #17/2)

### III.1.7.1 HURRY FACTORS -

| TASK CATEGORY | HURRY FACTOR | EXPLANATION |
|---|---|---|
| ON-EQUIPMENT | 100 | ON-EQUIPMENT TASK TIMES ARE BASED ON PEACE-TIME RATES. 0% FASTER TIMES ARE EXPECTED IN A WARTIME ENVIRONMENT |
| PREFLIGHT | 100 | PREFLIGHT TASK TIMES ARE BASED ON PEACE-TIME RATES. 0% FASTER TIMES ARE EXPECTED IN A WARTIME ENVIRONMENT |
| PART/EQUIP | 100 | PART/EQUIP TASK TIMES ARE BASED ON PEACE-TIME RATES. 0% FASTER TIMES ARE EXPECTED IN A WARTIME ENVIRONMENT |
| MUNITION ASSY | 100 | MUNITION ASSY TASK TIMES ARE BASED ON PEACE-TIME RATES. 0% FASTER TIMES ARE EXPECTED IN A WARTIME ENVIRONMENT |
| CE REPAIRS | 100 | CE REPAIR TASK TIMES ARE BASED ON PEACE-TIME RATES. 0% FASTER TIMES ARE EXPECTED IN A WARTIME ENVIRONMENT |

### III.1.7.2 REDUCE TIMES -

| TASK CATEGORY | REDUCE FACTOR | EXPLANATION |
|---|---|---|
| ON-EQUIPMENT | 0 | THERE IS NO REDUCTION IN THE MEAN TIME FOR ON-EQUIPMENT TASKS |
| PREFLIGHT | 0 | THERE IS NO REDUCTION IN THE MEAN TIME FOR PREFLIGHT TASKS |
| PART/EQUIP | 0 | THERE IS NO REDUCTION IN THE MEAN TIME FOR PART/EQUIPMENT TASKS |
| MUNITION ASSY | 0 | THERE IS NO REDUCTION IN THE MEAN TIME FOR MUNITION ASSEMBLY TASKS |
| CE REPAIRS | 0 | THERE IS NO REDUCTION IN THE MEAN TIME FOR CE REPAIR TASKS |

III.1.7.3 SAVE TIMES -

| TASK CATEGORY | SAVE FACTOR | EXPLANATION |
|---|---|---|
| ON-EQUIPMENT | 0 | THERE IS NO OVERALL ON-EQUIPMENT TASK TIME REDUCTION IN MINUTES |
| PREFLIGHT | 0 | THERE IS NO OVERALL PREFLIGHT TASK TIME REDUCTION IN MINUTES |
| PART/EQUIP | 0 | THERE IS NO OVERALL PART/EQUIPMENT TASK TIME REDUCTION IN MINUTES |
| MUNITION ASSY | 0 | THERE IS NO OVERALL MUNITION ASSY TASK TIME REDUCTION IN MINUTES |
| CE REPAIRS | 0 | THERE IS NO OVERALL CE REPAIR TASK TIME REDUCTION IN MINUTES |

## III.1.8 AIRCRAFT DATA

(CARD TYPES #15/1, #15/2, #15/3)

AIRCRAFT TYPE 1 (A-10)

| POST-FLIGHT DELAY | PRE-FLIGHT DELAY | FUEL QUAN | FUELING TASK # | NUMBER MISSIONS | UNSCHED TIME | NOMINAL CYCLE TIME | 1ST PART LOCATION |
|---|---|---|---|---|---|---|---|
| 3 MIN. | 0 MIN. | 5 | 700 | 2 | 90 | 100 | 1 |

| LOAD TYPE | TEAM # | SPECIAL #1 | AGE #2 | TRANSFER DELAY | BATTLE DAMAGE FIRST | BATTLE DAMAGE LAST | AIRBASE DAMAGE FIRST | AIRBASE DAMAGE LAST | PART RECOVERY PERCENT |
|---|---|---|---|---|---|---|---|---|---|
| 28 | 4 | -- | -- | 60 MIN. | 711 | 718 | 719 | 726 | 0 |

| BATTLE DAMAGE SPARES SORTIES/AC | ALERT PERSON TYPE | ALERT PERSON # | AC EQUIP TYPE | AC EQUIP # | REAR MAINT. BASE | ELIGIBLE FOR ORA | AIR/AIR MISSION | HOT PIT TASK |
|---|---|---|---|---|---|---|---|---|
| 0 | - | - | - | - | 0 | 0 | 0 | [illegible] |

## III 1.9 BASE DATA

(CARD TYPE #17/1)

BASE 1 IS THE MOS ORGANIZED UNDER AFR 66-1 AND THE TASK DATA IS PREPARED FOR A COMO (AFR 66-5) ORGANIZATION

| CROSS-TRAINED PERSONNEL | TASK-ASSIST-QUALIFIED PERSONNEL | WEAPON ASSEMBLY TASKS | NUMBER OF AC SHELTERS | AC PER SHELTER |
|---|---|---|---|---|
| 1 | 1 | 3 | 6[illegible] | 1 |

| NUMBER OF ALERT AC SHELTERS | POL CAPACITY | FUEL TRUCK EQUIP # | NO. OF AC LOADS PER FUEL TRUCK | FUEL TRUCK REFUEL TIME |
|---|---|---|---|---|
| 3 | 30000 | 60 | 9 | 45 MIN |

| AVERAGE TAXI TIME | EXTRA AC SHELTER TIME | METEOROLOGICAL STATE |
|---|---|---|
| 12 MIN | 0 MIN | 0 |

# CHAPTER IV

# INITIAL STOCKS AND STATUS OF AIRBASE RESOURCES

## IV.1 AIRCRAFT

### IV.1.1 AIRCRAFT ASSIGNMENT BY BASE

(CARD TYPE #20)

| BASE# | BASE DESCRIPTION | A/C TYPE | #AIRCRAFT | #SQUADRONS | #CREWS |
|---|---|---|---|---|---|
| 1 | MOB | A-10 | 72 | 0 | 90 |

### IV.1.2 AIRCRAFT INITIAL STATUS

(CARD TYPE #41)

| BASE# | MISSION# | # ASSIGNED AIRCRAFT |
|---|---|---|
| 1 | 1 | 24 |
| 1 | 2 | 48 |
| 1 | 3 | 0 |
| 1 | 4 | 0 |

### IV.1.3 AIRCRAFT INITIAL MAINTENANCE STATUS

(CARD TYPE #42)

SINCE THERE IS NO CARD TYPE #42 IN THE DATA BASE, ALL AIRCRAFT ARE ASSUMED TO BE COMPLETELY ARMED AND READY FOR THE INITIAL MISSION WITH NO INITIAL MAINTENANCE REQUIREMENTS.

## IV.2 PERSONNEL DATA

### IV.2.1 PERSONNEL LIST

(CARD TYPE #21)

BASE #1 (MOB)

| PERSONNEL TYPE | SHOP | AFSC | DESCRIPTION | TOTAL ACTUAL | TOTAL TARGETED | DAY SHIFT ACTUAL | DAY SHIFT TARGETED | MIN SIZE |
|---|---|---|---|---|---|---|---|---|
| 1 | 1 | 431X1C | FLIGHTLINE | 48 | 48 | 28 | 28 | 3 |
| 2 | 2 | 427X5 | AIRFRAME REP | 14 | 14 | 9 | 9 | 2 |
| 3 | 3 | 423X0 | ELECTRICAL SYS | 7 | 7 | 5 | 5 | 2 |
| 4 | 4 | 423X1 | ENVIRONMENTAL | 6 | 6 | 4 | 4 | 2 |
| 5 | 5 | 423X2 | EGRESS SYS | 8 | 8 | 4 | 4 | 2 |
| 6 | 6 | 423X4 | PNEUDRAULICS | 7 | 7 | 5 | 5 | 2 |
| 7 | 7 | 426X2 | ENGINE | 13 | 13 | 8 | 8 | 4 |
| 8 | 8 | 325X0 | AUTOPILOT | 4 | 4 | 2 | 2 | 2 |
| 9 | 9 | 325X1 | AVIONICS/INSTR | 7 | 7 | 5 | 5 | 2 |
| 10 | 10 | 322X2 | SENSORS | 4 | 4 | 2 | 2 | 2 |
| 11 | 11 | 431X1C | WHEEL/TIRE | 6 | 6 | 4 | 4 | 2 |
| 12 | 12 | 328X0 | RADIO COMM | 6 | 6 | 4 | 4 | 2 |
| 13 | 13 | 328X1 | RADAR NAVIGAT | 6 | 6 | 4 | 4 | 2 |
| 14 | 14 | 328X3 | ECM SYSTEMS | 12 | 12 | 8 | 8 | 2 |
| 15 | 15 | 328X4 | INERTIAL SYS | 7 | 7 | 5 | 5 | 2 |
| 16 | 16 | 321X2Q | FIRE CONTROL | 16 | 16 | 12 | 12 | 2 |
| 17 | 17 | 462WO | WEAPON CONTROL | 24 | 24 | 18 | 18 | 3 |
| 18 | 18 | 427X0 | MACHINIST | 8 | 8 | 6 | 6 | 2 |
| 19 | 19 | 427X4 | WELDER | 7 | 7 | 4 | 4 | 2 |
| 20 | 20 | 404X1 | CAMERA | 4 | 4 | 2 | 2 | 2 |
| 21 | 21 | 431X1C | HEAVY REPAIR | 28 | 28 | 18 | 18 | 4 |
| 22 | 30 | 316X1L | MISSILE MAINT | 18 | 18 | 12 | 12 | 3 |
| 23 | 23 | 423X3 | FUEL SYSTEMS | 19 | 19 | 12 | 12 | 2 |
| 24 | 24 | 582X1 | PARACHUTE | 11 | 11 | 6 | 6 | 2 |
| 25 | 24 | 531X5 | N.D.I | 8 | 8 | 4 | 4 | 2 |
| 26 | 24 | 531X4 | CORROSION CNTL | 13 | 13 | 8 | 8 | 2 |
| 27 | 28 | 462GO | GUN SERVICE | 24 | 24 | 18 | 18 | 4 |
| 28 | 28 | 462LO | LOADER | 120 | 96 | 92 | 92 | 4 |
| 29 | 28 | 322XO | AC CONFIGUR | 10 | 10 | 6 | 6 | 2 |
| 30 | 30 | 461XO | MUNITION MAINT | 48 | 48 | 33 | 33 | 3 |
| 31 | 1 | 431X1C | FLIGHTLINE | 48 | 48 | 28 | 28 | 2 |
| 32 | 2 | 427X5 | AIRFRAME REP | 14 | 14 | 9 | 9 | 2 |
| 33 | 3 | 423XO | ELECTRICAL SYS | 7 | 7 | 5 | 5 | 2 |
| 34 | 4 | 423X1 | ENVIRONMENTAL | 6 | 6 | 4 | 4 | 1 |
| 35 | 5 | 423X2 | EGRESS SYS | 8 | 8 | 4 | 4 | 2 |
| 36 | 6 | 423X4 | PNEUDRAULICS | 7 | 7 | 5 | 5 | 2 |
| 37 | 7 | 426X2 | ENGINE | 13 | 13 | 8 | 8 | 4 |
| 38 | 8 | 325XO | AUTOPILOT | 4 | 4 | 2 | 2 | 1 |
| 39 | 9 | 325X1 | AVIONICS/INSTR | 7 | 7 | 5 | 5 | 2 |
| 40 | 10 | 322X2 | SENSORS | 4 | 4 | 2 | 2 | 2 |
| 41 | 2 | | ABDR ASSESSORS | 15 | 15 | 9 | 9 | 6 |
| 42 | 12 | 328XO | RADIO COMM | 6 | 6 | 4 | 4 | 2 |
| 43 | 13 | 328X1 | RADAR NAVIGAT | 6 | 6 | 4 | 4 | 2 |
| 44 | 14 | 328X3 | ECM SYSTEMS | 6 | 6 | 4 | 4 | 2 |
| 45 | 15 | 328X4 | INERTIAL SYS | 7 | 7 | 5 | 5 | 2 |
| 46 | 16 | 321X2Q | FIRE CONTROL | 16 | 16 | 12 | 12 | 2 |
| 47 | 17 | 462WO | WEAPON CONTROL | 24 | 24 | 18 | 18 | 3 |
| 50 | 28 | | | 9 | 9 | 5 | 5 | 3 |
| 51 | 1 | 431X1C | FLIGHTLINE | 48 | 48 | 28 | 28 | 2 |
| 52 | 2 | 427X5 | AIRFRAME REP | 14 | 14 | 9 | 9 | 2 |
| 53 | 3 | 423XO | ELECTRICAL SYS | 7 | 7 | 5 | 5 | 2 |
| 54 | 4 | 423X1 | ENVIRONMENTAL | 6 | 6 | 4 | 4 | 1 |
| 55 | 5 | 423X2 | EGRESS SYS | 8 | 8 | 4 | 4 | 2 |

INITIAL STOCKS AND STATUS OF AIRBASE RESOURCES
PERSONNEL DATA

BASE #1 (MOB) (CONTINUED)

| PERSONNEL TYPE | SHOP | AFSC | DESCRIPTION | TOTAL ACTUAL | TOTAL TARGETED | DAY SHIFT ACTUAL | DAY SHIFT TARGETED | MIN SIZE |
|---|---|---|---|---|---|---|---|---|
| 56 | 6 | 423X4 | PNEUDRAULICS | 7 | 7 | 5 | 5 | 2 |
| 57 | 7 | 426X2 | ENGINE | 13 | 13 | 8 | 8 | 4 |
| 58 | 8 | 325X0 | AUTOPILOT | 4 | 4 | 2 | 2 | 1 |
| 59 | 9 | 325X1 | AVIONICS/INSTR | 7 | 7 | 5 | 5 | 2 |
| 60 | 10 | 322X2 | SENSORS | 4 | 4 | 2 | 2 | 2 |
| 62 | 12 | 328X0 | RADIO COMM | 6 | 6 | 4 | 4 | 2 |
| 63 | 13 | 328X1 | RADAR NAVIG | 6 | 6 | 4 | 4 | 2 |
| 64 | 14 | 328X3 | ECM SYSTEMS | 6 | 6 | 4 | 4 | 2 |
| 65 | 15 | 328X4 | INERTIAL SYS | 7 | 7 | 5 | 5 | 2 |
| 66 | 16 | 321X2Q | FIRE CONTROL | 16 | 16 | 12 | 12 | 2 |
| 67 | 17 | 462W0 | WEAPON CONTROL | 24 | 24 | 18 | 18 | 3 |
| 70 | 17 | 462W0 | WEAPON CONTROL | 6 | 6 | 3 | 3 | 3 |
| 75 | 5 | 423X2 | EGRESS SYS | 4 | 4 | 2 | 2 | 2 |
| 78 | 15 | 328X4 | INERTIAL SYS | 4 | 4 | 2 | 2 | 1 |
| 79 | 16 | 321X2Q | FIRE CONTROL | 16 | 16 | 8 | 8 | 1 |
| 80 | 12 | 328X0 | RADIO COMM | 6 | 6 | 3 | 3 | 1 |
| 81 | 13 | 328X1 | RADAR NAVIG | 6 | 6 | 3 | 3 | 1 |
| 82 | 2 | 427X5 | AIRFRAME REP | 4 | 4 | 2 | 2 | 2 |
| 83 | 3 | 423X0 | ELECTRICAL SYS | 4 | 4 | 2 | 2 | 1 |
| 84 | 4 | 423X1 | ENVIRONMENTAL | 4 | 4 | 2 | 2 | 1 |
| 85 | 14 | 328X3 | ECM SYSTEMS | 4 | 4 | 2 | 2 | 2 |
| 86 | 6 | 423X4 | PNEUDRAULICS | 4 | 4 | 2 | 2 | 1 |
| 87 | 7 | 426X2 | ENGINE | 12 | 12 | 8 | 8 | 2 |
| 88 | 8 | 325X0 | AUTOPILOT | 4 | 4 | 2 | 2 | 1 |
| 89 | 9 | 325X1 | AVIONICS/INSTR | 4 | 4 | 2 | 2 | 1 |
| 90 | 10 | 322X2 | SENSORS | 4 | 4 | 2 | 2 | 1 |
| 197 | 30 | | CE/RRR | 60 | 60 | 30 | 30 | 5 |
| 198 | 30 | | CE/RRR | 124 | 50 | 62 | 62 | 6 |
| 199 | 30 | | CE/RRR | 200 | 50 | 100 | 100 | 10 |

INITIAL STOCKS AND STATUS OF AIRBASE RESOURCES
PERSONNEL DATA

BASE #2 (COB)

| PERSONNEL TYPE | SHOP | AFSC | DESCRIPTION | TOTAL ACTUAL | TOTAL TARGETED | DAY SHIFT ACTUAL | DAY SHIFT TARGETED | MIN SIZE |
|---|---|---|---|---|---|---|---|---|
| 1 | 1 | 431X1C | FLIGHTLINE | 18 | 18 | 12 | 12 | 3 |
| 2 | 2 | 427X5 | AIRFRAME REP | 6 | 6 | 2 | 2 | 2 |
| 3 | 3 | 423XO | ELECTRICAL SYS | 4 | 4 | 2 | 2 | 2 |
| 4 | 4 | 423X1 | ENVIRONMENTAL | 4 | 4 | 2 | 2 | 2 |
| 5 | 5 | 423X2 | EGRESS SYS | 4 | 4 | 2 | 2 | 2 |
| 6 | 6 | 423X4 | PNEUDRAULICS | 4 | 4 | 2 | 2 | 2 |
| 7 | 7 | 426X2 | ENGINE | 8 | 8 | 4 | 4 | 4 |
| 8 | 8 | 325XO | AUTOPILOT | 4 | 4 | 2 | 2 | 2 |
| 9 | 9 | 325X1 | AVIONICS/INSTR | 4 | 4 | 2 | 2 | 2 |
| 10 | 10 | 322X2 | SENSORS | 4 | 4 | 2 | 2 | 2 |
| 11 | 11 | 431X1C | WHEEL/TIRE | 6 | 6 | 4 | 4 | 2 |
| 12 | 12 | 328XO | RADIO COMM | 6 | 6 | 4 | 4 | 2 |
| 13 | 13 | 328X1 | RADAR NAVIG | 6 | 6 | 4 | 4 | 2 |
| 14 | 14 | 328X3 | ECM SYSTEMS | 6 | 6 | 4 | 4 | 2 |
| 15 | 15 | 328X4 | INERTIAL SYS | 7 | 7 | 5 | 5 | 2 |
| 16 | 16 | 321X2Q | FIRE CONTROL | 16 | 16 | 12 | 12 | 2 |
| 17 | 17 | 462WO | WEAPON CONTROL | 9 | 9 | 6 | 6 | 3 |
| 18 | 18 | 427XO | MACHINIST | 8 | 8 | 6 | 6 | 2 |
| 19 | 19 | 427X4 | WELDER | 7 | 7 | 4 | 4 | 2 |
| 20 | 20 | 404X1 | CAMERA | 4 | 4 | 2 | 2 | 2 |
| 21 | 21 | 431X1C | HEAVY REPAIR | 28 | 28 | 18 | 18 | 4 |
| 22 | 30 | 316X1L | MISSILE MAINT | 18 | 18 | 12 | 12 | 3 |
| 23 | 23 | 423X3 | FUEL SYSTEMS | 19 | 19 | 12 | 12 | 2 |
| 24 | 24 | 582X1 | PARACHUTE | 11 | 11 | 6 | 6 | 2 |
| 25 | 24 | 531X5 | N.D.I. | 8 | 8 | 4 | 4 | 2 |
| 26 | 24 | 531X4 | CORROSION CNTL | 13 | 13 | 8 | 8 | 2 |
| 27 | 28 | 462GO | GUN SERVICE | 4 | 4 | 4 | 4 | 4 |
| 28 | 28 | 462LO | LOADER | 4 | 4 | 4 | 4 | 4 |
| 29 | 28 | 322XO | AC CONFIGUR | 6 | 6 | 4 | 4 | 2 |
| 30 | 30 | 461XO | MUNITION MAINT | 48 | 48 | 33 | 33 | 3 |
| 41 | 2 | | ABDR ASSESSORS | 12 | 12 | 6 | 6 | 6 |
| 50 | 28 | 322XO | AC CONFIGUR | 9 | 9 | 5 | 5 | 3 |
| 70 | 17 | 462WO | WEAPON CONTROL | 6 | 6 | 3 | 3 | 3 |
| 75 | 5 | 423X2 | EGRESS SYS | 4 | 4 | 2 | 2 | 2 |
| 78 | 15 | 328X4 | INERTIAL SYS | 4 | 4 | 2 | 2 | 2 |
| 79 | 16 | 321X2Q | FIRE CONTROL | 16 | 16 | 8 | 8 | 2 |
| 80 | 12 | 328XO | RADIO COMM | 6 | 6 | 3 | 3 | 1 |
| 81 | 13 | 328X1 | RADAR NAVIG | 6 | 6 | 3 | 3 | 1 |
| 82 | 2 | 427X5 | AIRFRAME REP | 4 | 4 | 2 | 2 | 2 |
| 83 | 3 | 423XO | ELECTRICAL SYS | 4 | 4 | 2 | 2 | 2 |
| 84 | 4 | 423X1 | ENVIRONMENTAL | 4 | 4 | 2 | 2 | 2 |
| 85 | 14 | 328X3 | ECM SYSTEMS | 4 | 4 | 2 | 2 | 2 |
| 86 | 6 | 423X4 | PNEUDRAULICS | 4 | 4 | 2 | 2 | 2 |
| 87 | 7 | 426X2 | ENGINE | 12 | 12 | 8 | 8 | 4 |
| 88 | 8 | 325XO | AUTOPILOT | 4 | 4 | 2 | 2 | 2 |
| 89 | 9 | 325X1 | AVIONICS/INSTR | 4 | 4 | 2 | 2 | 2 |
| 90 | 10 | 322X2 | SENSORS | 4 | 4 | 2 | 2 | 1 |

## IV.2.2 EQUIVALENT PERSONNEL

(CARD TYPE #45/1)

| PERSONNEL TYPE | AFSC | PERSONNEL DESCRIPTION | SQUADRON #2 | SQUADRON #3 | WING LEVEL |
|---|---|---|---|---|---|
| (SQUAD #1) | | | | | |
| 1 | 431X1C | FLIGHTLINE | 31 | 51 | -- |
| 2 | 427X5 | AIRFRAME REPAIR | 32 | 52 | 82 |
| 3 | 423XO | ELECTRICAL SYS | 33 | 53 | 83 |
| 4 | 423X1 | ENVIRONMENTAL | 34 | 54 | 84 |
| 5 | 423X2 | EGRESS SYS | 35 | 55 | 75 |
| 6 | 423X4 | PNEUDRAULICS | 36 | 56 | 86 |
| 7 | 426X2 | ENGINE | 37 | 57 | 87 |
| 8 | 325XO | AUTOPILOT | 38 | 58 | 88 |
| 9 | 325X1 | AVIONICS/INSTR | 39 | 59 | 89 |
| 10 | 322X2 | SENSORS | 40 | 60 | 90 |
| 12 | 328XO | RADIO COMM | 42 | 62 | 80 |
| 13 | 328X1 | RADAR NAVIGATION | 43 | 63 | 81 |
| 14 | 328X3 | ECM SYSTEMS | 44 | 64 | 85 |
| 15 | 328X4 | INERTIAL SYSTEMS | 45 | 65 | 78 |
| 16 | 321X2Q | FIRE CONTROL | 46 | 66 | 79 |
| 17 | 462WO | WEAPON CONTROL | 47 | 67 | 70 |
| 18 | 427XO | MACHINIST | -- | -- | -- |
| 19 | 427X4 | WELDER | -- | -- | -- |
| 20 | 404X1 | CAMERA | -- | -- | -- |
| 21 | 431X1C | HEAVY REPAIR | -- | -- | -- |
| 22 | 316X1L | MISSLILE MAINT | -- | -- | -- |
| 23 | 423X3 | FUEL SYSTEMS | -- | -- | -- |
| 24 | 582X1 | PARACHUTE | -- | -- | -- |
| 25 | 531X5 | N.D.I. | -- | -- | -- |
| 26 | 531X4 | CORROSION CONTROL | -- | -- | -- |
| 27 | 462GO | GUN SERVICE | -- | -- | -- |
| 28 | 462LO | LOADER | -- | -- | -- |
| 29 | 322XO | AC CONFIGUR | -- | -- | -- |
| 30 | 461XO | MUNITION MAINT | -- | -- | -- |

| PERSONNEL TYPE | AFSC | PERSONNEL DESCRIPTION | SQUADRON #1 | SQUADRON #3 | WING LEVEL |
|---|---|---|---|---|---|
| (SQUAD #2) | | | | | |
| 31 | 431X1C | FLIGHTLINE | 1 | 51 | -- |
| 32 | 427X5 | AIRFRAME REPAIR | 2 | 52 | 82 |
| 33 | 423XO | ELECTRICAL SYS | 3 | 53 | 83 |
| 34 | 423X1 | ENVIRONMENTAL | 4 | 54 | 84 |
| 35 | 423X2 | EGRESS SYS | 5 | 55 | 75 |
| 36 | 423X4 | PNEUDRAULICS | 6 | 56 | 86 |
| 37 | 426X2 | ENGINE | 7 | 57 | 87 |
| 38 | 325XO | AUTOPILOT | 8 | 58 | 88 |
| 39 | 325X1 | AVIONICS/INSTR | 9 | 59 | 89 |
| 40 | 322X2 | SENSORS | 10 | 60 | 90 |
| 41 | | ABDR ASSESSORS | -- | -- | -- |
| 42 | 328XO | RADIO COMM | 12 | 62 | 80 |
| 43 | 328X1 | RADAR NAVIGATION | 13 | 63 | 81 |
| 44 | 328X3 | ECM SYSTEMS | 14 | 64 | 85 |
| 45 | 328X4 | INERTIAL SYS | 15 | 65 | 78 |
| 46 | 321X2Q | FIRE CONTROL | 16 | 66 | 79 |
| 47 | 462WO | WEAPON CONTROL | -- | -- | -- |
| 50 | 322XO | AC CONFIGUR | -- | -- | -- |

INITIAL STOCKS AND STATUS OF AIRBASE RESOURCES
PERSONNEL DATA

EQUIVALENT PERSONNEL (CONTINUED)

| PERSONNEL TYPE | AFSC | PERSONNEL DESCRIPTION | SQUADRON #1 | SQUADRON #2 | WING LEVEL |
|---|---|---|---|---|---|
| (SQUAD #3) | | | | | |
| 51 | 431X1C | FLIGHTLINE | 1 | 31 | -- |
| 52 | 427X5 | AIRFRAME REPAIR | 2 | 32 | 82 |
| 53 | 423XO | ELECTRICAL SYS | 3 | 33 | 83 |
| 54 | 423X1 | ENVIRONMENTAL | 4 | 34 | 84 |
| 55 | 423X2 | EGRESS SYS | 5 | 35 | 75 |
| 56 | 423X4 | PNEUDRAULICS | 6 | 36 | 86 |
| 57 | 426X2 | ENGINE | 7 | 37 | 87 |
| 58 | 325XO | AUTOPILOT | 8 | 38 | 88 |
| 59 | 325X1 | AVIONICS/INSTR | 9 | 39 | 89 |
| 60 | 322X2 | SENSORS | 10 | 40 | 90 |
| 62 | 328XO | RADIO COMM | 12 | 42 | 80 |
| 63 | 328X1 | RADAR NAVIGATION | 13 | 43 | 81 |
| 64 | 328X3 | ECM SYSTEMS | 14 | 44 | 85 |
| 65 | 328X4 | INERTIAL SYS | 15 | 45 | 78 |
| 66 | 321X2Q | FIRE CONTROL | 16 | 46 | 79 |
| 67 | 462WO | WEAPON CONTROL | -- | -- | -- |
| 70 | 462WO | WEAPON CONTROL | -- | -- | -- |

| PERSONNEL TYPE | AFSC | PERSONNEL DESCRIPTION | SQUADRON #1 | SQUADRON #2 | SQUADRON #3 |
|---|---|---|---|---|---|
| (WING) | | | | | |
| 75 | 423X2 | EGRESS SYS | 5 | 35 | 55 |
| 78 | 328X4 | INERTIAL SYS | 15 | 45 | 65 |
| 79 | 321X2Q | FIRE CONTROL | 16 | 46 | 66 |
| 80 | 328XO | RADIO COMM | 12 | 42 | 62 |
| 81 | 328X1 | RADAR NAVIGATION | 13 | 43 | 63 |
| 82 | 427X5 | AIRFRAME REPAIR | 2 | 32 | 52 |
| 83 | 423XO | ELECTRICAL SYS | 3 | 33 | 53 |
| 84 | 423X1 | ENVIRONMENTAL | 4 | 34 | 54 |
| 85 | 328X3 | ECM SYSTEMS | 14 | 44 | 64 |
| 86 | 423X4 | PNEUDRAULICS | 6 | 36 | 56 |
| 87 | 426X2 | ENGINE | 7 | 37 | 57 |
| 88 | 325XO | AUTOPILOT | 8 | 38 | 58 |
| 89 | 325X1 | AVIONICS/INSTR | 9 | 39 | 59 |
| 90 | 322X2 | SENSORS | 10 | 60 | 90 |
| 197 | | CE/RRR | -- | -- | -- |
| 198 | | CE/RRR | -- | -- | -- |
| 199 | | CE/RRR | -- | -- | -- |

## IV.2.3 CROSSED TRAINED PERSONNEL

(CARD TYPE #45/2)

| PERSONNEL TYPE | AFSC | PERSONNEL DESCRIPTION | CROSS TRAINED TYPES #1 | #2 | #3 | #4 | #5 |
|---|---|---|---|---|---|---|---|
| 1 | 431X1C | FLIGHTLINE | -- | -- | -- | -- | -- |
| 2 | 427X5 | AIRFRAME REPAIR | 41 | -- | -- | -- | -- |
| 3 | 423XO | ELECTRICAL SYS | -- | -- | -- | -- | -- |
| 4 | 423X1 | ENVIRONMENTAL | -- | -- | -- | -- | -- |
| 5 | 423X2 | EGRESS SYS | -- | -- | -- | -- | -- |
| 6 | 423X4 | PNEUDRAULICS | -- | -- | -- | -- | -- |
| 7 | 426X2 | ENGINE | -- | -- | -- | -- | -- |
| 8 | 325XO | AUTOPILOT | -- | -- | -- | -- | -- |
| 9 | 325X1 | AVIONICS/INSTR | -- | -- | -- | -- | -- |
| 10 | 322X2 | SENSORS | -- | -- | -- | -- | -- |
| 11 | 431X1C | WHEEL/TIRE | 1 | -- | -- | -- | -- |
| 12 | 328XO | RADIO COMM | -- | -- | -- | -- | -- |
| 13 | 328X1 | RADAR NAVIGATION | -- | -- | -- | -- | -- |
| 14 | 328X3 | ECM SYSTEMS | -- | -- | -- | -- | -- |
| 15 | 328X4 | INERTIAL SYSTEMS | -- | -- | -- | -- | -- |
| 16 | 321X2Q | FIRE CONTROL | -- | -- | -- | -- | -- |
| 17 | 462WO | WEAPON CONTROL | -- | -- | -- | -- | -- |
| 18 | 427XO | MACHINIST | -- | -- | -- | -- | -- |
| 19 | 427X4 | WELDER | -- | -- | -- | -- | -- |
| 20 | 404X1 | CAMERA | -- | -- | -- | -- | -- |
| 21 | 431X1C | HEAVY REPAIR | -- | -- | -- | -- | -- |
| 22 | 316X1L | MISSILE MAINT | 50 | -- | -- | -- | -- |
| 23 | 423X3 | FUEL SYSTEMS | -- | -- | -- | -- | -- |
| 24 | 582X1 | PARACHUTE | -- | -- | -- | -- | -- |
| 25 | 531X5 | N.D.I. | -- | -- | -- | -- | -- |
| 26 | 531X4 | CORROSION CONTROL | -- | -- | -- | -- | -- |
| 27 | 462GO | GUN SERVICE | -- | -- | -- | -- | -- |
| 28 | 462LO | LOADER | -- | -- | -- | -- | -- |
| 29 | 322XO | AC CONFIGUR | -- | -- | -- | -- | -- |
| 30 | 461XO | MUNITION MAINT | 50 | -- | -- | -- | -- |
| 31 | 431X1C | FLIGHTLINE | -- | -- | -- | -- | -- |
| 32 | 427X5 | AIRFRAME REPAIR | -- | -- | -- | -- | -- |
| 33 | 423XO | ELECTRICAL SYS | -- | -- | -- | -- | -- |
| 34 | 423X1 | ENVIRONMENTAL | -- | -- | -- | -- | -- |
| 35 | 423X2 | EGRESS SYSTEMS | -- | -- | -- | -- | -- |
| 36 | 423X4 | PNEUDRAULICS | -- | -- | -- | -- | -- |
| 37 | 426X2 | ENGINE | -- | -- | -- | -- | -- |
| 38 | 325XO | AUTOPILOT | -- | -- | -- | -- | -- |
| 39 | 325X1 | AVIONICS/INSTR | -- | -- | -- | -- | -- |
| 40 | 322X2 | SENSORS | -- | -- | -- | -- | -- |
| 41 | | ABDR ASSESSOR | 2 | -- | -- | -- | -- |
| 42 | 328XO | RADIO COMM | -- | -- | -- | -- | -- |
| 43 | 328X1 | RADAR NAVIGATION | -- | -- | -- | -- | -- |
| 44 | 328X3 | ECM SYSTEMS | -- | -- | -- | -- | -- |
| 45 | 328X4 | INERTIAL SYS | -- | -- | -- | -- | -- |
| 46 | 321X2Q | FIRE CONTROL | -- | -- | -- | -- | -- |
| 47 | 462WO | WEAPON CONTROL | -- | -- | -- | -- | -- |
| 50 | 322XO | AC CONFIGUR | -- | -- | -- | -- | -- |
| 51 | 431X1C | FLIGHTLINE | -- | -- | -- | -- | -- |
| 52 | 427X5 | AIRFRAME REPAIR | -- | -- | -- | -- | -- |
| 53 | 423XO | ELECTRICAL SYS | -- | -- | -- | -- | -- |
| 54 | 423X1 | ENVIRONMENTAL | -- | -- | -- | -- | -- |
| 55 | 423X2 | EGRESS SYS | -- | -- | -- | -- | -- |
| 56 | 423X4 | PNEUDRAULICS | -- | -- | -- | -- | -- |
| 57 | 426X2 | ENGINE | -- | -- | -- | -- | -- |
| 58 | 325XO | AUTOPILOT | -- | -- | -- | -- | -- |

CROSS TRAINED PERSONNEL (CONTINUED)

| PERSONNEL TYPE | AFSC | PERSONNEL DESCRIPTION | CROSS TRAINED TYPES #1 | #2 | #3 | #4 | #5 |
|---|---|---|---|---|---|---|---|
| 59 | 325X1 | AVIONICS/INSTR | -- | -- | -- | -- | -- |
| 60 | 322X2 | SENSORS | -- | -- | -- | -- | -- |
| 62 | 328XO | RADIO COMM | -- | -- | -- | -- | -- |
| 63 | 328X1 | RADAR NAVIGATION | -- | -- | -- | -- | -- |
| 64 | 328X3 | ECM SYSTEMS | -- | -- | -- | -- | -- |
| 65 | 328X4 | INERTIAL SYS | -- | -- | -- | -- | -- |
| 66 | 321X2Q | FIRE CONTROL | -- | -- | -- | -- | -- |
| 67 | 462WO | WEAPON CONTROL | -- | -- | -- | -- | -- |
| 70 | 462WO | WEAPON CONTROL | -- | -- | -- | -- | -- |
| 75 | 423X2 | EGRESS SYS | -- | -- | -- | -- | -- |
| 78 | 328X4 | INERTIAL SYS | -- | -- | -- | -- | -- |
| 79 | 321X2Q | FIRE CONTROL | -- | -- | -- | -- | -- |
| 80 | 328XO | RADIO COMM | -- | -- | -- | -- | -- |
| 81 | 328X1 | RADAR NAVIGATION | -- | -- | -- | -- | -- |
| 82 | 427X5 | AIRFRAME REPAIR | -- | -- | -- | -- | -- |
| 83 | 423XO | ELECTRICAL SYS | -- | -- | -- | -- | -- |
| 84 | 423X1 | ENVIRONMENTAL | -- | -- | -- | -- | -- |
| 85 | 328X3 | ECM SYSTEMS | -- | -- | -- | -- | -- |
| 86 | 423X4 | PNEUDRAULICS | -- | -- | -- | -- | -- |
| 87 | 426X2 | ENGINE | -- | -- | -- | -- | -- |
| 88 | 325XO | AUTOPILOT | -- | -- | -- | -- | -- |
| 89 | 325X1 | AVIONICS/INSTR | -- | -- | -- | -- | -- |
| 90 | 322X2 | SENSORS | -- | -- | -- | -- | -- |
| 197 | | CE/RRR | -- | -- | -- | -- | -- |
| 198 | | CE/RRR | -- | -- | -- | -- | -- |
| 199 | | CE/RRR | -- | -- | -- | -- | -- |

## IV.2.4 TASK-ASSIST PERSONNEL

(CARD TYPE #45/3)

| PERSONNEL TYPE | AFSC | PERSONNEL DESCRIPTION | TASK-ASSIST-QUALIFIED TYPES #1 | #2 | #3 | #4 | #5 |
|---|---|---|---|---|---|---|---|
| 1 | 431X1C | FLIGHTLINE | -- | -- | -- | -- | -- |
| 2 | 427X5 | AIRFRAME REPAIR | 1 | 21 | -- | -- | -- |
| 3 | 423XO | ELECTRICAL SYS | -- | -- | -- | -- | -- |
| 4 | 423X1 | ENVIRONMENTAL | -- | -- | -- | -- | -- |
| 5 | 423X2 | EGRESS SYS | -- | -- | -- | -- | -- |
| 6 | 423X4 | PNEUDRAULICS | -- | -- | -- | -- | -- |
| 7 | 426X2 | ENGINE | -- | -- | -- | -- | -- |
| 8 | 325XO | AUTOPILOT | 9 | -- | -- | -- | -- |
| 9 | 325X1 | AVIONICS/INSTR | 13 | -- | -- | -- | -- |
| 10 | 322X2 | SENSORS | -- | -- | -- | -- | -- |
| 11 | 431X1C | WHEEL/TIRE | 1 | -- | -- | -- | -- |
| 12 | 328XO | RADIO COMM | -- | -- | -- | -- | -- |
| 13 | 328X1 | RADAR NAVIGATION | -- | -- | -- | -- | -- |
| 14 | 328X3 | ECM SYSTEMS | -- | -- | -- | -- | -- |
| 15 | 328X4 | INERTIAL SYS | -- | -- | -- | -- | -- |
| 16 | 321X2Q | FIRE CONTROL | -- | -- | -- | -- | -- |
| 17 | 462WO | WEAPON CONTROL | -- | -- | -- | -- | -- |
| 18 | 427XO | MACHINIST | -- | -- | -- | -- | -- |
| 19 | 427X4 | WELDER | -- | -- | -- | -- | -- |
| 20 | 404X1 | CAMERA | -- | -- | -- | -- | -- |
| 21 | 431X1C | HEAVY REPAIR | 1 | 2 | -- | -- | -- |
| 22 | 316X1L | MISSILE MAINT | 30 | -- | -- | -- | -- |
| 23 | 423X3 | FUEL SYSTEMS | -- | -- | -- | -- | -- |

TASK-ASSIST (CONTINUED)

| PERSONNEL TYPE | AFSC | PERSONNEL DESCRIPTION | TASK-ASSIST-QUALIFIED TYPES #1 | #2 | #3 | #4 | #5 |
|---|---|---|---|---|---|---|---|
| 24 | 582X1 | PARACHUTE | -- | -- | -- | -- | -- |
| 25 | 531X5 | N.D.I. | -- | -- | -- | -- | -- |
| 26 | 531X4 | CORROSION CONTROL | -- | -- | -- | -- | -- |
| 27 | 462GO | GUN SERVICE | 28 | -- | -- | -- | -- |
| 28 | 462LO | LOADER | -- | -- | -- | -- | -- |
| 29 | 322XO | AC CONFIGUR | -- | -- | -- | -- | -- |
| 30 | 461XO | MUNITION MAINT | -- | -- | -- | -- | -- |
| 31 | 431X1C | FLIGHTLINE | -- | -- | -- | -- | -- |
| 32 | 427X5 | AIRFRAME REPAIR | -- | -- | -- | -- | -- |
| 33 | 423XO | ELECTRICAL SYS | -- | -- | -- | -- | -- |
| 34 | 423X1 | ENVIRONMENTAL | -- | -- | -- | -- | -- |
| 35 | 423X2 | EGRESS SYS | -- | -- | -- | -- | -- |
| 36 | 423X4 | PNEUDRAULICS | -- | -- | -- | -- | -- |
| 37 | 426X2 | ENGINE | -- | -- | -- | -- | -- |
| 38 | 325XO | AUTOPILOT | -- | -- | -- | -- | -- |
| 39 | 325X1 | AVIONICS/INSTR | -- | -- | -- | -- | -- |
| 40 | 322X2 | SENSORS | -- | -- | -- | -- | -- |
| 41 | | ABDR ASSESSOR | 2 | -- | -- | -- | -- |
| 42 | 328XO | RADIO COMM | -- | -- | -- | -- | -- |
| 43 | 328X1 | RADAR NAVIGATION | -- | -- | -- | -- | -- |
| 44 | 328X3 | ECM SYSTEMS | -- | -- | -- | -- | -- |
| 45 | 328X4 | INERTIAL SYS | -- | -- | -- | -- | -- |
| 46 | 321X2Q | FIRE CONTROL | -- | -- | -- | -- | -- |
| 47 | 462WO | WEAPON CONTROL | -- | -- | -- | -- | -- |
| 50 | 322XO | AC CONFIGUR | -- | -- | -- | -- | -- |
| 51 | 431X1C | FLIGHTLINE | -- | -- | -- | -- | -- |
| 52 | 427X5 | AIRFRAME REPAIR | -- | -- | -- | -- | -- |
| 53 | 423XO | ELECTRICAL SYS | -- | -- | -- | -- | -- |
| 54 | 423X1 | ENVIRONMENTAL | -- | -- | -- | -- | -- |
| 55 | 423X2 | EGRESS SYS | -- | -- | -- | -- | -- |
| 56 | 423X4 | PNEUDRAULICS | -- | -- | -- | -- | -- |
| 57 | 426X2 | ENGINE | -- | -- | -- | -- | -- |
| 58 | 325XO | AUTOPILOT | -- | -- | -- | -- | -- |
| 59 | 325X1 | AVIONICS/INSTR | -- | -- | -- | -- | -- |
| 60 | 322X2 | SENSORS | -- | -- | -- | -- | -- |
| 62 | 328XO | RADIO COMM | -- | -- | -- | -- | -- |
| 63 | 328X1 | RADAR NAVIGATION | -- | -- | -- | -- | -- |
| 64 | 328X3 | ECM SYSTEMS | -- | -- | -- | -- | -- |
| 65 | 328X4 | INERTIAL SYS | -- | -- | -- | -- | -- |
| 66 | 321X2Q | FIRE CONTROL | -- | -- | -- | -- | -- |
| 67 | 462WO | WEAPON CONTROL | -- | -- | -- | -- | -- |
| 70 | 462WO | WEAPON CONTROL | -- | -- | -- | -- | -- |
| 75 | 423X2 | EGRESS SYS | -- | -- | -- | -- | -- |
| 78 | 328X4 | INERTIAL SYS | -- | -- | -- | -- | -- |
| 79 | 321X2Q | FIRE CONTROL | -- | -- | -- | -- | -- |
| 80 | 328XO | RADIO COMM | -- | -- | -- | -- | -- |
| 81 | 328X1 | RADAR NAVIGATION | -- | -- | -- | -- | -- |
| 82 | 427X5 | AIRFRAME REPAIR | -- | -- | -- | -- | -- |
| 83 | 423XO | ELECTRICAL SYS | -- | -- | -- | -- | -- |
| 84 | 423X1 | ENVIRONMENTAL | -- | -- | -- | -- | -- |
| 85 | 328X3 | ECM SYSTEMS | -- | -- | -- | -- | -- |
| 86 | 423X4 | PNEUDRAULICS | -- | -- | -- | -- | -- |
| 87 | 426X2 | ENGINE | -- | -- | -- | -- | -- |
| 88 | 325XO | AUTOPILOT | -- | -- | -- | -- | -- |
| 89 | 325X1 | AVIONICS/INSTR | -- | -- | -- | -- | -- |
| 90 | 322X2 | SENSORS | -- | -- | -- | -- | -- |
| 197 | | CE/RRR | -- | -- | -- | -- | -- |
| 198 | | CE/RRR | -- | -- | -- | -- | -- |
| 199 | | CE/RRR | -- | -- | -- | -- | -- |

INITIAL STOCKS AND STATUS OF AIRBASE RESOURCES
PERSONNEL DATA

## IV 3 SUPPORT EQUIPMENT

### IV.3.1 AGE LIST

(CARD TYPES #22 AND #46)

| BASE NO | AGE TYPE | SHOP | DESCRIPTION | ACTUAL | TARGETED | EQUIVALENT AGE #1 | #2 | #3 |
|---|---|---|---|---|---|---|---|---|
| 1 | 1 | 1 | FUEL HYDRANT | 3 | 3 | -- | -- | -- |
| 1 | 2 | 21 | OIL CART | 6 | 6 | -- | -- | -- |
| 1 | 3 | 6 | HYDRAULIC MULE | 9 | 9 | -- | -- | -- |
| 1 | 4 | 6 | HYDRAULIC CART | 9 | 9 | -- | -- | -- |
| 1 | 5 | 21 | B-1 MAINT STAND | 15 | 15 | -- | -- | -- |
| 1 | 6 | 21 | B-4 MAINT STAND | 28 | 28 | -- | -- | -- |
| 1 | 7 | 21 | C-1 MAINT STAND | 21 | 21 | -- | -- | -- |
| 1 | 8 | 7 | ENGINE CART | 6 | 6 | -- | -- | -- |
| 1 | 9 | 7 | ENGINE STAND | 6 | 6 | -- | -- | -- |
| 1 | 10 | 7 | ENGINE HOIST ASSY | 10 | 10 | -- | -- | -- |
| 1 | 11 | 21 | AM32A-60 GENERATOR | 9 | 9 | -- | -- | -- |
| 1 | 12 | 21 | MC-1A AIR COMPRESS | 8 | 8 | -- | -- | -- |
| 1 | 13 | 21 | MC-2A AIR COMPRESS | 13 | 13 | -- | -- | -- |
| 1 | 14 | 21 | AXLE JACK | 17 | 17 | -- | -- | -- |
| 1 | 15 | 21 | WING JACK | 30 | 30 | -- | -- | -- |
| 1 | 16 | 23 | FUEL BOWERS | 6 | 6 | -- | -- | -- |
| 1 | 17 | 23 | FUEL TANK LOADER | 12 | 12 | -- | -- | -- |
| 1 | 18 | 21 | LOX CART | 8 | 8 | -- | -- | -- |
| 1 | 19 | 25 | GUN TRAILER | 20 | 20 | -- | -- | -- |
| 1 | 20 | 25 | MHU-83 BOMBLIFT | 16 | 16 | -- | -- | -- |
| 1 | 21 | 25 | GUN LOADER GFU-7 | 24 | 24 | -- | -- | -- |
| 1 | 22 | 4 | NITROGEN BOTTLE | 8 | 8 | -- | -- | -- |
| 1 | 80 | 1 | FUEL TRUCK | 13 | 13 | -- | -- | -- |

| BASE NO | AGE TYPE | SHOP | DESCRIPTION | ACTUAL | TARGETED | EQUIVALENT AGE #1 | #2 | #3 |
|---|---|---|---|---|---|---|---|---|
| 2 | 1 | 1 | FUEL HYDRANT | 2 | 2 | -- | -- | -- |
| 2 | 2 | 21 | OIL CART | 4 | 4 | -- | -- | -- |
| 2 | 3 | 6 | HYDRAULIC MULE | 6 | 6 | -- | -- | -- |
| 2 | 4 | 6 | HYDRAULIC CART | 6 | 6 | -- | -- | -- |
| 2 | 5 | 21 | B-1 MAINT STAND | 10 | 10 | -- | -- | -- |
| 2 | 6 | 21 | B-4 MAINT STAND | 18 | 18 | -- | -- | -- |
| 2 | 7 | 21 | C-1 MAINT STAND | 14 | 14 | -- | -- | -- |
| 2 | 8 | 7 | ENGINE CART | 4 | 4 | -- | -- | -- |
| 2 | 9 | 7 | ENGINE STAND | 4 | 4 | -- | -- | -- |
| 2 | 10 | 7 | ENGINE HOIST ASSY | 6 | 6 | -- | -- | -- |
| 2 | 11 | 21 | AM32A-60 GENERATOR | 6 | 6 | -- | -- | -- |
| 2 | 12 | 21 | MC-1A AIR COMPRESS | 5 | 5 | -- | -- | -- |
| 2 | 13 | 21 | MC-2A AIR COMPRESS | 8 | 8 | -- | -- | -- |
| 2 | 14 | 21 | AXLE JACK | 11 | 11 | -- | -- | -- |
| 2 | 15 | 21 | WING JACK | 20 | 20 | -- | -- | -- |
| 2 | 16 | 23 | FUEL BOWERS | 4 | 4 | -- | -- | -- |
| 2 | 17 | 23 | FUEL TANK LOADER | 8 | 8 | -- | -- | -- |
| 2 | 18 | 21 | LOX CART | 5 | 5 | -- | -- | -- |
| 2 | 19 | 25 | GUN TRAILER | 14 | 14 | -- | -- | -- |
| 2 | 20 | 25 | MHU-83 BOMBLIFT | 10 | 10 | -- | -- | -- |
| 2 | 21 | 25 | GUN LOADER GFU-7 | 16 | 16 | -- | -- | -- |
| 2 | 22 | 4 | NITROGEN BOTTLE | 5 | 5 | -- | -- | -- |
| 2 | 80 | 1 | FUEL TRUCK | 8 | 8 | -- | -- | -- |

## IV.4 SPARE PARTS

### IV.4.1 LIST OF PARTS

(CARD TYPE #23)

| PART NO | WUC CODE | PART DESCRIPTION | AVAILABLE SPARES | NOMINAL STOCK LEVEL |
|---|---|---|---|---|
| 1 | 11AFO | WINDSHIELD ASSEMBLY | 1 | 1 |
| 2 | 11AFC | GLASS, SIDE WINDSHIELD, L.H./R.H. | 2 | 2 |
| 3 | 11ALO | BALLAST, VARIABLE | 0 | 0 |
| 4 | 11ARB | F2, OXYGEN CONVERTER | 2 | 2 |
| 5 | 11ARE | F5, SAFING AND GUN REMOVAL ACCESS | 1 | 1 |
| 6 | 11ARV | F14, ARMAMENT CIRCUIT BREAKER ACCESS | 0 | 0 |
| 7 | 11ASH | F44, AVIONICS ACCESS | 0 | 0 |
| 8 | 11ASK | F61, INVERTER, BATTERY RELAY BOX ACC | 0 | 0 |
| 9 | 11ASP | F65, BATTERY ACCESS | 0 | 0 |
| 10 | 11AST | F69, LADDER COMPARTMENT | 0 | 0 |
| 11 | 11ATE | F103, AVIONICS ACCESS | 0 | 0 |
| 12 | 11BOO | FUSELAGE, CENTER SECTION, STATION | 1 | 1 |
| 13 | 11BNA | F46, ELECTRICAL TROUGH ACCESS | 1 | 1 |
| 14 | 11COO | FUSELAGE, AFT SECTION, STATION | 0 | 0 |
| 15 | 11CEN | F45, ECS AND FUEL ACCESS | 2 | 2 |
| 16 | 11CEP | F47, AUXILIARY POWER UNIT ACCESS | 1 | 1 |
| 17 | 11DOO | WING ASSEMBLY | 1 | 1 |
| 18 | 11DGK | W21, LOWER PANEL ACCESS, RIGHT | 0 | 0 |
| 19 | 11DHK | W22, LOWER PANEL ACCESS, LEFT | 0 | 0 |
| 20 | 11DQB | W24, ACCESS PANEL OUTBOARD | 0 | 0 |
| 21 | 11EOO | EMPENNAGE | 0 | 0 |
| 22 | 11EEB | E3, COMPASS FLUX GATE ACCESS | 0 | 0 |
| 23 | 11EEF | E11, RUDDER TOP HINGE ACCESS, L.H. | 0 | 0 |
| 24 | 11EFF | E12, RUDDER TOP HINGE ACCESS, R.H. | 0 | 0 |
| 25 | 11FOO | ENGINE NACELLE, L.H./R.H. | 1 | 1 |
| 26 | 11FCC | N5, ENGINE LINES QAD ACCESS | 0 | 0 |
| 27 | 12AOO | COCKPIT | 0 | 0 |
| 28 | 12AAB | BOTTLE ASSEMBLY, INSULATED VACUUM | 0 | 0 |
| 29 | 12AAK | GLARESHIELD, MAIN INSTRUMENT PANEL | 1 | 1 |
| 30 | 12AAL | ANTI-REFLECTION SHIELD | 1 | 1 |
| 31 | 12BAO | LADDER, CREW BOARDING | 0 | 0 |
| 32 | 12GGA | ACTUATOR ASSEMBLY, CANOPY | 1 | 1 |
| 34 | 13BHA | TIRE, NOSE LANDING GEAR | 6 | 6 |
| 35 | 13AOO | MAIN LANDING GEAR | 4 | 4 |
| 36 | 13ADO | ACTUATOR, MAIN LAND GEAR RETRACTION | 1 | 1 |
| 37 | 13BDO | ACTUATOR, NOSE LAND GEAR RETRACTION | 1 | 1 |
| 38 | 13COO | NOSE WHEEL STEERING SYSTEM | 0 | 0 |
| 39 | 13DAO | BRAKE ASSEMBLY, R.H./L.H. | 0 | 0 |
| 40 | 13DFO | ANTI-SKID SYSTEM | 1 | 1 |
| 41 | 13DFA | CONTROL UNIT, ANTI-SKID | 3 | 3 |
| 42 | 13GAA | PANEL, LANDING GEAR CONTROL | 1 | 1 |
| 43 | 13GAC | VALVE, LANDING GEAR SELECTOR | 1 | 1 |
| 44 | 14ABO | EMERGENCY FLIGHT CONTROL PANEL | 0 | 0 |
| 45 | 14CCA | ACTUATOR, AILERON | 2 | 2 |
| 46 | 14CDA | ACTUATOR, SERVO TAB SHIFTER | 0 | 0 |
| 47 | 14CDB | ACTUATOR, TRIM STEPPER | 1 | 1 |
| 48 | 14EOO | PITCH CONTROL SYSTEM | 0 | 0 |
| 49 | 14EAO | ELEVATOR ASSEMBLY, L.H./R.H. | 1 | 1 |
| 50 | 14EAA | TAB TRIM | 1 | 1 |
| 51 | 14EBM | TORQUESHAFT, ELEVATOR ACTUATOR | 1 | 1 |
| 52 | 14ECA | ACTUATOR, ELEVATOR | 4 | 4 |

SPARE PARTS (CONTINUED)

| PART NO | WUC CODE | PART DESCRIPTION | AVAILABLE SPARES | NOMINAL STOCK LEVEL |
|---|---|---|---|---|
| 53 | 14EDA | ACTUATOR, PITCH TRIM | 5 | 5 |
| 54 | 14EDB | ACTUATOR, PITCH TRIM TAB | 1 | 1 |
| 55 | 14GAO | RUDDER ASSEMBLY, L.H./R.H | 1 | 1 |
| 56 | 14GCA | ACTUATOR, RUDDER | 1 | 1 |
| 57 | 14KAO | FLAP ASSEMBLY, INBOARD | 0 | 0 |
| 58 | 14KBO | FLAP ASSEMBLY, OUTBOARD | 0 | 0 |
| 59 | 14KDA | ACTUATOR, FLAP | 1 | 1 |
| 60 | 14NAO | SLAT ASSEMBLY | 1 | 1 |
| 61 | 14NCA | ACTUATOR, SLAT | 2 | 2 |
| 62 | 14NCB | VALVE ASSEMBLY, CONTROL | 2 | 2 |
| 63 | 23000 | TURBO FAN POWER PLANT SYSTEM | 3 | 3 |
| 64 | 23ALF | AFT SHROUD DRAIN SEAL | 2 | 2 |
| 65 | 23AEO | SEAL ASSEMBLY, FAN AIR DUCT | 0 | 0 |
| 66 | 23AHO | ENGINE TO NACELLE PYLON ASSEMBLY | 0 | 0 |
| 67 | 23CBB | FAN FORWARD CASING | 0 | 0 |
| 68 | 23CPD | INTERTURBINE SEAL AND LINER | 0 | 0 |
| 69 | 23CSD | C-SUMP REAR COVER | 8 | 8 |
| 70 | 23DCA | MAIN FUEL CONTROL | 2 | 2 |
| 71 | 23DCJ | MAIN FUEL FILTER | 6 | 6 |
| 72 | 23DJL | AMPLIFIER CONTROL, T5 | 3 | 3 |
| 73 | 23DKB | OIL FILLER TUBE | 1 | 1 |
| 74 | 23DLF | LUBE FILTER ELEMENT | 1 | 1 |
| 75 | 23GCA | GENERATOR, TACH CORE SPEED (NG) | 1 | 1 |
| 76 | 23GCB | INDICATOR, TACH, CORE SPEED (NG) | 1 | 1 |
| 77 | 23GCC | INDICATOR, TACH, FAN SPEED (NF) | 2 | 2 |
| 78 | 23GEA | INDICATOR, INTERTURBINE TEMPERATURE | 1 | 1 |
| 79 | 23GGB | INDICATOR, FUEL FLOW, LEFT ENGINE | 3 | 3 |
| 80 | 23GGC | INDICATOR, FUEL FLOW, RIGHT ENGINE | 1 | 1 |
| 81 | 23KAO | QUADRANT ASSEMBLY, ENGINE CONTROL | 3 | 3 |
| 82 | 23CAC | FAN BLADE | 9 | 9 |
| 83 | 23JAO | STARTER, AIR TURBINE | 1 | 1 |
| 84 | 23JBA | VALVE, ENGINE START, SOLENOID SHUT-OFF | 4 | 4 |
| 85 | 24AFA | FUEL CONTROL | 3 | 3 |
| 86 | 24AHA | CONTROL, ELETRONIC | 3 | 3 |
| 87 | 24AHE | THERMOCOUPLE, EGT | 1 | 1 |
| 88 | 41AAO | PANEL, ENVIRONMENTAL CONTROL | 2 | 2 |
| 89 | 41ABA | VALVE, TEMPERATURE CONTROL | 1 | 1 |
| 90 | 41ABF | CONTROLLER, CABIN TEMPERATURE SYSTEM | 2 | 2 |
| 91 | 41BOO | AIR CONDITIONING SYSTEM | 2 | 2 |
| 92 | 41BAA | AIR CYCLE MACHINE | 1 | 1 |
| 93 | 41BAB | HOUSING AND ASPIRATOR ASSEMBLY | 1 | 1 |
| 94 | 41BBD | DUCTS, LEFT SIDE, SERVICE AIR | 1 | 1 |
| 95 | 41BBM | OUTLET ASSEMBLY, CABIN AIR | 3 | 3 |
| 96 | 41BBN | VALVE, MANUAL CABIN AIR DIRECTOR | 1 | 1 |
| 97 | 41BCB | VALVE, PRESSURE REGULATING/SHUT-OFF | 1 | 1 |
| 98 | 41EAA | CONTROL UNIT, ANTI-ICE SYSTEM | 3 | 3 |
| 99 | 41GOO | WASH SYSTEMS | 0 | 0 |
| 100 | 41GAE | PRESSURE REGULATOR, WASH SYSTEMS | 0 | 0 |
| 101 | 42AOO | AC POWER GENERATING SYSTEM | 0 | 0 |
| 102 | 42AAO | INTEGRATED DRIVE GENERATOR, L.H./R.H. | 10 | 10 |
| 103 | 42AEO | CONTROL UNIT, GENERATOR L.H./R.H. | 5 | 5 |
| 104 | 42BAO | INVERTER, STANDBY | 2 | 2 |
| 105 | 42FOO | AC/DC DISTRIBUTION SYSTEM | 1 | 1 |
| 106 | 42FAB | BOX ASSEMBLY, MISC RELAYS | 1 | 1 |
| 107 | 42FAC | BOX ASSEMBLY, COCKPIT AC POWER RELAYS | 0 | 0 |
| 108 | 42FAE | BOX ASSEMBLY, FUEL/ENGINE RELAYS | 1 | 1 |
| 109 | 42FAG | BOX ASSEMBLY, LANDING GEAR RELAYS | 0 | 0 |

SPARE PARTS (CONTINUED)

| PART NO | WUC CODE | PART DESCRIPTION | AVAILABLE SPARES | NOMINAL STOCK LEVEL |
|---|---|---|---|---|
| 110 | 44AAO | CONTROL PANEL, EXT & INTERIOR LIGHT | 1 | 1 |
| 111 | 44BBO | POWER SUPPLY, STROBE LIGHTS | 1 | 1 |
| 112 | 44BEB | LIGHT, LOWER FUSELAGE | 2 | 2 |
| 113 | 44BEC | LIGHT, FORMATION/TAIL FLOOD, VERT STAB | 0 | 0 |
| 114 | 44COO | INTERIOR LIGHTING SYSTEM | 1 | 1 |
| 115 | 44CDO | PANEL ASSEMBLY, AUX LIGHTING | 1 | 1 |
| 116 | 44CFO | PANEL, MASTER CAUTION ANNUNCIATOR | 2 | 2 |
| 117 | 44CGA | UTILITY LIGHT | 0 | 0 |
| 118 | 45AOO | LEFT HYDRAULIC POWER SYSTEM | 0 | 0 |
| 119 | 45AAA | PUMP, HYDRAULIC ENGINE DRIVEN, LEFT | 1 | 1 |
| 120 | 45ACL | VALVE, SYSTEM SHUT OFF | 0 | 0 |
| 121 | 45ACT | ACCUMULATOR, BOOT STRAP | 1 | 1 |
| 122 | 45ADO | LEFT HYDRAULIC RESERVOIR ASSEMBLY | 2 | 2 |
| 123 | 45AFD | HOSE, PRESSURE, ENGINE/FUSELAGE PYLONS | 1 | 1 |
| 124 | 45BAA | PUMP, HYDRAULIC ENGINE DRIVEN, RIGHT | 2 | 2 |
| 125 | 45BDO | RIGHT HYDRAULIC RESERVOIR ASSEMBLY | 1 | 1 |
| 126 | 45DAO | PUMP, HYDRAULIC, 10 GPM | 3 | 3 |
| 127 | 46AEO | FUEL TANK, EXTERNAL, 600 GALLON | 0 | 0 |
| 128 | 46BDA | RELAY, ELECTRICAL | 5 | 5 |
| 129 | 46BDK | AMPLIFIER, SIGNAL | 3 | 3 |
| 130 | 46DAA | INDICATOR, FUEL QUANTITY & TOTALIZER | 1 | 1 |
| 131 | 46DAD | INTERMEDIATE DEVICE | 3 | 3 |
| 132 | 46EAO | PUMP ASSY, LEFT/RIGHT MAIN TANK BOOST | 0 | 0 |
| 133 | 46FBF | VALVE, RIGHT WING PILOT SHUTOFF | 1 | 1 |
| 134 | 47A77 | CONNECTORS, AIRCRAFT ELECTRICAL | 0 | 0 |
| 135 | 47AAO | CONVERTER ASSEMBLY, LOX, MB-5/A | 4 | 4 |
| 136 | 47AAD | CAP, BUILD-UP AND VENT | 0 | 0 |
| 137 | 47ABA | REGULATOR, DILUTER DEMAND, CRU-73A | 2 | 2 |
| 138 | 47ACA | INDICATOR, LOX QUANTITY, GMU-37A | 1 | 1 |
| 139 | 49AAB | SENSOR, 650 DEGREES F | 1 | 1 |
| 140 | 49BOO | FIRE EXTINGUISHING SYSTEM | 0 | 0 |
| 141 | 41BAD | CANISTERS, EXTINGUISHING SYSTEM | 0 | 0 |
| 142 | 51INS | INSTRUMENTS | 3 | 3 |
| 143 | 51COO | FLIGHT INSTRUMENTS | 0 | 0 |
| 144 | 51CAA | ACCELEROMETER, NORMAL | 1 | 1 |
| 145 | 51CAB | INDICATOR, STANDBY ATTITUDE | 1 | 1 |
| 146 | 51CAC | INDICATOR, ATTITUDE DIRECTOR | 2 | 2 |
| 147 | 51CDA | PROBE, PITOT STATIC | 1 | 1 |
| 148 | 51CDE | DRAINS, PITOT STATIC LINES | 6 | 6 |
| 149 | 51CDK | COMPUTER TRANSDUCER-ALTITUDE | 3 | 3 |
| 150 | 51CDM | INDICATOR, AIRSPEED | 2 | 2 |
| 151 | 51CDP | ALTIMETER, AAU-19/A | 2 | 2 |
| 152 | 51CDR | ALTIMETER, AAU-34/A | 3 | 3 |
| 153 | 51CDS | INDICATOR, VERICAL VELOCITY | 1 | 1 |
| 154 | 51CGB | INDICATOR, ANGLE OF ATTACK | 2 | 2 |
| 155 | 51EOO | NAVIGATION INSTRUMENTS | 0 | 0 |
| 156 | 51EAA | CLOCK, AICRAFT, ABU-11/A | 7 | 7 |
| 157 | 51FOO | CONTROL SET, GYROSCOPE, ATTITUDE | 1 | 1 |
| 158 | 51FAO | GYROSCOPE, DISPLACEMENT | 5 | 5 |
| 159 | 51FCO | AMPLIFIER, ELETRONIC CONTROL | 2 | 2 |
| 160 | 51FEO | CONTROLLER, COMPASS SYSTEM | 0 | 0 |
| 161 | 51FFO | DETECTOR, MAGNETIC AZIMUTH | 2 | 2 |
| 162 | 51GAO | INDICATOR, HORIZONTAL SITUATION | 5 | 5 |
| 163 | 52AAO | COMPUTER | 2 | 2 |
| 164 | 52ACO | CONTROL PANEL, AUX FLIGHT | 1 | 1 |
| 165 | 52AFB | TRANSDUCER, SPEED BRAKE POSITION LVDT | 2 | 2 |
| 166 | 52BBO | COMPUTER, BETA DOT | 3 | 3 |

AD-A169 062 TSAR (THEATER SIMULATION OF AIRBASE RESOURCES) DATABASE 3/3
DICTIONARY A-10 WITH INTERMEDIATE MAINTENANCE(U)
ORLANDO TECHNOLOGY INC SHALIMAR FL D ROBINSON ET AL.
UNCLASSIFIED 25 APR 86 F/G 1/3 NL

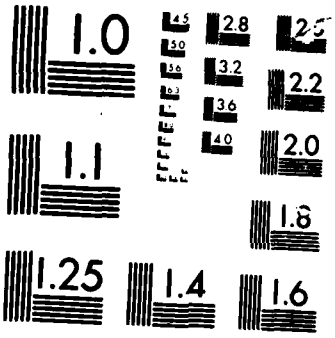


MICROCOPY CHART

INITIAL STOCKS AND STATUS OF AIRBASE RESOURCES
SPARE PARTS

SPARE PARTS (CONTINUED)

| PART NO | WUC CODE | PART DESCRIPTION | AVAILABLE SPARES | NOMINAL STOCK LEVEL |
|---|---|---|---|---|
| 167 | 55AAO | RECORDER, SIGNAL DATA | 1 | 1 |
| 168 | 55AAB | MAGAZINE, RECORDER | 4 | 4 |
| 169 | 55ABO | CONVERTER/MULTIPLEXER | 2 | 2 |
| 170 | 55ACO | SENSING DEVICES | 0 | 0 |
| 171 | 55ACC | ACCELEROMETER, NORMAL | 0 | 0 |
| 172 | 55ACD | ACCELEROMETER, TRANSVERSE | 0 | 0 |
| 173 | 55CAO | ENGINE TIME/TEMPERATURE RECORDER | 4 | 4 |
| 174 | 62AOO | VHF/FM COMMUNICATION | 2 | 2 |
| 175 | 62AAO | RADIO SET, RECEIVER/TRANSMITTER | 7 | 7 |
| 176 | 62ACO | CONTROL, C-921/FM-622A | 1 | 1 |
| 177 | 62ADO | ANTENNA ASSEMBLY, BLADE | 3 | 3 |
| 178 | 62CAO | RADIO SET, RECEIVER/TRANSMITTER | 3 | 3 |
| 179 | 62CCO | CONTROL UNIT, VHF/AM-807A | 2 | 2 |
| 180 | 62DAO | RADIO SET, RECEIVER/TRANSMITTER | 5 | 5 |
| 181 | 62DBO | CONTROL UNIT, C-10604 | 2 | 2 |
| 182 | 63AOO | UHF COMMUNICATIONS SYSTEM | 1 | 1 |
| 183 | 63AAO | RADIO SET, RECEIVER/TRANSMITTER | 5 | 5 |
| 184 | 63ADO | DIRECTION FINDER, UHF/ADF/ARD | 6 | 6 |
| 185 | 63AFO | REMOTE CHANNEL FREQ INDICATOR | 2 | 2 |
| 186 | 64AAO | CONTROL, INTERCOMM SET | 1 | 1 |
| 187 | 64ACO | RELAY BOX, AVIONICS | 2 | 2 |
| 188 | 65AOO | TRANSPONDER SET | 3 | 3 |
| 189 | 65AAO | RECEIVER/TRANSMITTER | 4 | 4 |
| 190 | 65ABO | CONTROL UNIT | 1 | 1 |
| 191 | 71CAO | PANEL, NAV MODE SELECT | 1 | 1 |
| 192 | 71CCO | RELAY BOX, NAV MODE, 51 RELAYS | 2 | 2 |
| 193 | 71DBO | RADIO RECEIVER | 2 | 2 |
| 194 | 71ZAO | RECEIVER/TRANSMITTER | 2 | 2 |
| 195 | 71ZBO | ADAPTER, MX-9577/A | 1 | 1 |
| 196 | 71ZDO | CONTROL PANEL ARN-118 | 1 | 1 |
| 197 | 72AAO | ENCODER/TRANSPONDER | 1 | 1 |
| 198 | 74AOO | HEAD-UP DISPLAY | 2 | 2 |
| 199 | 74AAO | PROJECTION UNIT, HEAD-UP DISPLAY | 3 | 3 |
| 200 | 74ABO | SYMBOL GENERATOR | 3 | 3 |
| 201 | 74ACO | CONTROL UNIT | 2 | 2 |
| 202 | 74COO | TARGET ID SET LASER, PAVE PENNY | 3 | 3 |
| 203 | 74CAO | DETECTOR, LASER ILLUMINATED TARGET | 8 | 8 |
| 204 | 74CBO | ADAPTER, CONTROL DETECTOR | 2 | 2 |
| 205 | 74DOO | GUN CAMERA SYSTEM | 1 | 1 |
| 206 | 74DAD | ELECTRONICS MODULE | 1 | 1 |
| 207 | 74DCO | MAGAZINE 100 FT LB-41A | 1 | 1 |
| 208 | 74ECO | TV MONITOR INSTALLATION (CARDION) | 2 | 2 |
| 209 | 74EAO | DISPLAY UNIT, FIRE CONTROL | 4 | 4 |
| 210 | 74EBO | CONTROL UNIT, FIRE CONTROL | 2 | 2 |
| 211 | 74FAO | DISPLAY UNIT, TV MONITOR | 2 | 2 |
| 212 | 74FBO | CONTROL UNIT, TV MONITOR | 2 | 2 |
| 213 | 75AAO | GUN, 30 MM | 7 | 7 |
| 214 | 75ABO | DRUM, AMMUNITION | 3 | 3 |
| 215 | 75ADO | GUN, 30 MM, OTHER | 2 | 2 |
| 216 | 75AFO | ACCESS UNIT, WEAPON DELIVERY | 4 | 4 |
| 217 | 75ALO | BELT, CONVEYOR | 8 | 8 |
| 218 | 75AMO | WEAPON DELIVERY, OTHER | 1 | 1 |
| 219 | 75ANO | WEAPON DELIVERY, OTHER | 1 | 1 |
| 220 | 75ASO | ELECTRONIC CONTROL UNIT | 2 | 2 |
| 221 | 75AUO | DRIVE SYSTEM | 4 | 4 |
| 222 | 75AUB | DRIVE, HYDRAULIC MOTOR | 4 | 4 |
| 223 | 75AWO | TRANSFER UNIT | 1 | 1 |

SPARE PARTS (CONTINUED)

| PART NO | WUC CODE | PART DESCRIPTION | AVAILABLE SPARES | NOMINAL STOCK LEVEL |
|---|---|---|---|---|
| 224 | 75BOO | ARMAMENT CONTROL SYSTEM | 2 | 2 |
| 225 | 75BAO | PANEL, ARMAMENT CONTROL | 3 | 3 |
| 226 | 75BAS | INDICATOR, STORES LOADING DISPLAY | 1 | 1 |
| 227 | 75BCO | INTERSTATION CONTROL UNIT | 4 | 4 |
| 228 | 75BDO | WEAPON DELIVERY, OTHER | 2 | 2 |
| 229 | 75BEO | WEAPON DELIVERY, OTHER | 1 | 1 |
| 230 | 75COO | EXTERNAL ARMAMENT SYSTEM | 3 | 3 |
| 231 | 75CAO | PYLON, WING WEAPON STATION 1 & 11 | 1 | 1 |
| 232 | 75CCO | PYLON, WING WEAPON STATION 2 & 10 | 2 | 2 |
| 233 | 75CCF | SEAL ASSEMBLY, PYLON | 2 | 2 |
| 234 | 75CDO | PYLON, WING WEAPON STATION 4 & 8 | 1 | 1 |
| 235 | 75DOO | CABLE ADAPTERS | 0 | 0 |
| 236 | 75DCO | TER-9 ADAPTER | 1 | 1 |
| 237 | 75DDO | LAU-88 ADAPTER | 1 | 1 |
| 238 | 75FAO | BOMB RACK, MAU-40/A | 2 | 2 |
| 239 | 75FBO | BOMB RACK, MAU-50/A | 1 | 1 |
| 240 | 75FDC | TRIPLE-EJECTOR RACK, TER-9A | 3 | 3 |
| 241 | 76AAO | SIGNAL PROCESSOR | 3 | 3 |
| 242 | 76ABO | AMPLIFIER, DETECTORS | 2 | 2 |
| 243 | 76AFO | INDICATOR, AZIMUTH | 1 | 1 |
| 244 | 76ARO | COMPASS SAIL AMPLIFIER DETECTOR | 2 | 2 |
| 245 | 76ASO | INDICATOR, CONTROL | 1 | 1 |
| 246 | 76POD | ECM POD | 34 | 34 |
| 247 | 76EEO | RECEIVER, FREQ SELECTIVE | 1 | 1 |
| 248 | 91BEA | CYLINDER ASSEMBLY | 0 | 0 |
| 249 | 91BEC | HOSE, EMERGENCY OXYGEN | 2 | 2 |
| 250 | 13AHAL | TIRE, MAIN LANDING GEAR, L.H. | 7 | 7 |
| 251 | 13AHAR | TIRE, MAIN LANDING GEAR, R.H. | 7 | 7 |

## IV.4.2 LIST OF SALVAGEABLE PARTS

(CARD TYPE #28)
(FROM AIRCRAFT TOO BADLY DAMAGED TO REPAIR )

| PART NO | WUC CODE | PART DESCRIPTION | QUANTITY |
|---|---|---|---|
| 1 | 11AFO | WINDSHIELD ASSEMBLY | 1 |
| 2 | 11AFC | GLASS, SIDE WINDSHIELD, L.H./R.H | 1 |
| 3 | 11ALO | BALLAST, VARIABLE | 1 |
| 4 | 11ARB | F2, OXYGEN CONVERTER | 1 |
| 5 | 11ARE | F5, SAFING AND GUN REMOVAL ACCESS | 1 |
| 6 | 11ARV | F14, ARMAMENT CIRCUIT BREAKER ACCESS | 1 |
| 7 | 11ASH | F44, AVIONICS ACCESS | 1 |
| 8 | 11ASK | F61, INVERTER, BATTERY RELAY BOX ACCESS | 1 |
| 9 | 11ASP | F65, BATTERY ACCESS | 1 |
| 10 | 11AST | F69, LADDER COMPARTMENT | 1 |
| 11 | 11ATE | F103, AVIONICS ACCESS | 1 |
| 12 | 11BOO | FUSELAGE, CENTER SECTION, STATION | 1 |
| 13 | 11BNA | F46, ELECTRICAL TROUGH ACCESS | 1 |
| 14 | 11COO | FUSELAGE, AFT SECTION, STATION | 1 |
| 15 | 11CEN | F45, ECS AND FUEL ACCESS | 1 |
| 16 | 11CEP | F47, AUXILIARY POWER UNIT ACCESS | 1 |
| 17 | 11DOO | WING ASSEMBLY | 1 |
| 18 | 11DGK | W21, LOWER PANEL ACCESS, RIGHT | 1 |
| 19 | 11DHK | W22, LOWER PANEL ACCESS, LEFT | 1 |
| 20 | 11DQB | W24, ACCESS PANEL OUTBOARD | 1 |
| 21 | 11EOO | EMPENNAGE | 1 |
| 22 | 11EEB | E3, COMPASS FLUX GATE ACCESS | 1 |
| 23 | 11EEF | E11, RUDDER TOP HINGE ACCESS, L.H | 1 |
| 24 | 11EFF | E12, RUDDER TOP HINGE ACCESS, R.H | 1 |
| 25 | 11FOO | ENGINE NACELLE, L.H./R.H. | 1 |
| 26 | 11FCC | N5, ENGINE LINES QAD ACCESS | 1 |
| 27 | 12AOO | COCKPIT | 1 |
| 28 | 12AAB | BOTTLE ASSEMBLY, INSULATED VACUUM | 1 |
| 29 | 12AAK | GLARESHIELD, MAIN INSTRUMENT PANEL | 1 |
| 30 | 12AAL | ANTI-REFLECTION SHIELD | 1 |
| 31 | 12BAO | LADDER, CREW BOARDING | 1 |
| 32 | 12GGA | ACTUATOR ASSEMBLY, CANOPY | 1 |
| 34 | 13BHA | TIRE, NOSE LANDING GEAR | 1 |
| 35 | 13AOO | MAIN LANDING GEAR | 2 |
| 36 | 13ADO | ACTUATOR, MAIN LAND GEAR RETRACTION/DRAG | 1 |
| 37 | 13BDO | ACTUATOR, NOSE LAND GEAR RETRACTION/DRAG | 1 |
| 38 | 13COO | NOSE WHEEL STEERING SYSTEM | 1 |
| 39 | 13DAO | BRAKE ASSEMBLY, R.H./L.H | 1 |
| 40 | 13DFO | ANTI-SKID SYSTEM | 1 |
| 41 | 13DFA | CONTROL UNIT, ANTI-SKID | 1 |
| 42 | 13GAA | PANEL, LANDING GEAR CONTROL | 1 |
| 43 | 13GAC | VALVE, LANDING GEAR SELECTOR | 1 |
| 44 | 14ABO | EMERGENCY FLIGHT CONTROL PANEL | 1 |
| 45 | 14CCA | ACTUATOR, AILERON | 1 |
| 46 | 14CDA | ACTUATOR, SERVO TAB SHIFTER | 1 |
| 47 | 14CDB | ACTUATOR, TRIM STEPPER | 1 |
| 48 | 14EOO | PITCH CONTROL SYSTEM | 1 |
| 49 | 14EAO | ELEVATOR ASSEMBLY, L.H./R.H | 1 |
| 50 | 14EAA | TAB TRIM | 1 |
| 51 | 14EBM | TORQUESHAFT, ELEVATOR ACTUATOR | 1 |
| 52 | 14ECA | ACTUATOR, ELEVATOR | 1 |
| 53 | 14EDA | ACTUATOR, PITCH TRIM | 1 |
| 54 | 14EDB | ACTUATOR, PITCH TRIM TAB | 1 |

SALVAGEABLE PARTS (CONTINUED)

| PART NO | WUC CODE | PART DESCRIPTION | QUANTITY |
|---|---|---|---|
| 55 | 14GAO | RUDDER ASSEMBLY, L.H./R.H. | 1 |
| 56 | 14GCA | ACTUATOR, RUDDER | 1 |
| 57 | 14KAO | FLAP ASSEMBLY, INBOARD | 1 |
| 58 | 14KBO | FLAP ASSEMBLY, OUTBOARD | 1 |
| 59 | 14KDA | ACTUATOR, FLAP | 1 |
| 60 | 14NAO | SLAT ASSEMBLY | 1 |
| 61 | 14NCA | ACTUATOR, SLAT | 1 |
| 62 | 14NCB | VALVE ASSEMBLY, CONTROL | 1 |
| 63 | 23000 | TURBO FAN POWER PLANT SYSTEM | 1 |
| 64 | 23ALF | AFT SHROUD DRAIN SEAL | 1 |
| 65 | 23AEO | SEAL ASSEMBLY, FAN AIR DUCT | 1 |
| 66 | 23AHO | ENGINE TO NACELLE PYLON ASSEMBLY | 1 |
| 67 | 23CBB | FAN FORWARD CASING | 1 |
| 68 | 23CPD | INTERTURBINE SEAL AND LINER | 1 |
| 69 | 23CSD | C-SUMP REAR COVER | 1 |
| 70 | 23DCA | MAIN FUEL CONTROL | 1 |
| 71 | 23DCJ | MAIN FUEL FILTER | 1 |
| 72 | 23DJL | AMPLIFIER CONTROL, T5 | 1 |
| 73 | 23DKB | OIL FILLER TUBE | 1 |
| 74 | 23DLF | LUBE FILTER ELEMENT | 1 |
| 75 | 23GCA | GENERATOR, TACH CORE SPEED (NG) | 1 |
| 76 | 23GCB | INDICATOR, TACH, CORE SPEED (NG) | 1 |
| 77 | 23GCC | INDICATOR, TACH, FAN SPEED (NF) | 1 |
| 78 | 23GEA | INDICATOR, INTERTURBINE TEMPERATURE | 1 |
| 79 | 23GGB | INDICATOR, FUEL FLOW, LEFT ENGINE | 1 |
| 80 | 23GGC | INDICATOR, FUEL FLOW, RIGHT ENGINE | 1 |
| 81 | 23KAO | QUADRANT ASSEMBLY, ENGINE CONTROL | 1 |
| 82 | 23CAC | FAN BLADE | 1 |
| 83 | 23JAO | STARTER, AIR TURBINE | 1 |
| 84 | 23JBA | VALVE, ENGINE START, SOLENOID SHUT-OFF | 1 |
| 85 | 24AFA | FUEL CONTROL | 1 |
| 86 | 24AHA | CONTROL, ELETRONIC | 1 |
| 87 | 24AHE | THERMOCOUPLE, EGT | 1 |
| 88 | 41AAO | PANEL, ENVIRONMENTAL CONTROL | 1 |
| 89 | 41ABA | VALVE, TEMPERATURE CONTROL | 1 |
| 90 | 41ABF | CONTROLLER, CABIN TEMPERATURE SYSTEM | 1 |
| 91 | 41BOC | AIR CONDITIONING SYSTEM | 1 |
| 92 | 41BAA | AIR CYCLE MACHINE | 1 |
| 93 | 41BAB | HOUSING AND ASPIRATOR ASSEMBLY | 1 |
| 94 | 41BBD | DUCTS, LEFT SIDE, SERVICE AIR | 1 |
| 95 | 41BBM | OUTLET ASSEMBLY, CABIN AIR | 1 |
| 96 | 41BBN | VALVE, MANUAL CABIN AIR DIRECTOR | 1 |
| 97 | 41BCB | VALVE, PRESSURE REGULATING/SHUT-OFF | 1 |
| 98 | 41EAA | CONTROL UNIT, ANTI-ICE SYSTEM | 1 |
| 99 | 41GOO | WASH SYSTEMS | 1 |
| 100 | 41GAE | PRESSURE REGULATOR, WASH SYSTEMS | 1 |
| 101 | 42AOO | AC POWER GENERATING SYSTEM | 1 |
| 102 | 42AAO | INTEGRATED DRIVE GENERATOR, L.H./R.H. | 1 |
| 103 | 42AEO | CONTROL UNIT, GENERATOR L.H./R.H. | 1 |
| 104 | 42BAO | INVERTER, STANDBY | 1 |
| 105 | 42FOO | AC/DC DISTRIBUTION SYSTEM | 1 |
| 106 | 42FAB | BOX ASSEMBLY, MISC RELAYS | 1 |
| 107 | 42FAC | BOX ASSEMBLY, COCKPIT AC POWER RELAYS | 1 |
| 108 | 42FAE | BOX ASSEMBLY, FUEL/ENGINE RELAYS | 1 |
| 109 | 42FAG | BOX ASSEMBLY, LANDING GEAR RELAYS | 1 |
| 110 | 44AAO | CONTROL PANEL, EXTERIOR & INTERIOR LIGHT | 1 |
| 111 | 44BBO | POWER SUPPLY, STROBE LIGHTS | 1 |

INITIAL STOCKS AND STATUS OF AIRBASE RESOURCES
SPARE PARTS

SALVAGEABLE PARTS (CONTINUED)

| PART NO | WUC CODE | PART DESCRIPTION | QUANTITY |
|---|---|---|---|
| 112 | 44BEB | LIGHT, LOWER FUSELAGE | 1 |
| 113 | 44BEC | LIGHT, FORMATION/TAIL FLOOD, VERT STAB | 1 |
| 114 | 44COO | INTERIOR LIGHTING SYSTEM | 1 |
| 115 | 44CDO | PANEL ASSEMBLY, AUX LIGHTING | 1 |
| 116 | 44CFO | PANEL, MASTER CAUTION ANNUNCIATOR | 1 |
| 117 | 44CGA | UTILITY LIGHT | 1 |
| 118 | 45AOO | LEFT HYDRAULIC POWER SYSTEM | 1 |
| 119 | 45AAA | PUMP, HYDRAULIC ENGINE DRIVEN, LEFT | 1 |
| 120 | 45ACL | VALVE, SYSTEM SHUT OFF | 1 |
| 121 | 45ACT | ACCUMULATOR, BOOT STRAP | 1 |
| 122 | 45ADO | LEFT HYDRAULIC RESERVOIR ASSEMBLY | 1 |
| 123 | 45AFD | HOSE, PRESSURE, ENGINE/FUSELAGE PYLONS | 1 |
| 124 | 45BAA | PUMP, HYDRAULIC ENGINE DRIVEN, RIGHT | 1 |
| 125 | 45BDO | RIGHT HYDRAULIC RESERVOIR ASSEMBLY | 1 |
| 126 | 45DAO | PUMP, HYDRAULIC, 10 GPM | 1 |
| 127 | 46AEO | FUEL TANK, EXTERNAL, 600 GALLON | 1 |
| 128 | 46BDA | RELAY, ELECTRICAL | 1 |
| 129 | 46BDK | AMPLIFIER, SIGNAL | 1 |
| 130 | 46DAA | INDICATOR, FUEL QUANTITY & TOTALIZER | 1 |
| 131 | 46DAD | INTERMEDIATE DEVICE | 1 |
| 132 | 46EAO | PUMP ASSY, LEFT/RIGHT MAIN TANK BOOST | 1 |
| 133 | 46FBF | VALVE, RIGHT WING PILOT SHUTOFF | 1 |
| 134 | 47A77 | CONNECTORS, AIRCRAFT ELECTRICAL | 1 |
| 135 | 47AAO | CONVERTER ASSEMBLY, LOX, MB-5/A | 1 |
| 136 | 47AAD | CAP, BUILD-UP AND VENT | 1 |
| 137 | 47ABA | REGULATOR, DILUTER DEMAND, CRU-73A | 1 |
| 138 | 47ACA | INDICATOR, LOX QUANTITY, GMU-37A | 1 |
| 139 | 49AAB | SENSOR, 650 DEGREES F | 1 |
| 140 | 49BOO | FIRE EXTINGUISHING SYSTEM | 1 |
| 141 | 41BAD | CANISTERS, EXTINGUISHING SYSTEM | 1 |
| 142 | 51INS | INSTRUMENTS | 1 |
| 143 | 51COO | FLIGHT INSTRUMENTS | 1 |
| 144 | 51CAA | ACCELEROMETER, NORMAL | 1 |
| 145 | 51CAB | INDICATOR, STANDBY ATTITUDE | 1 |
| 146 | 51CAC | INDICATOR, ATTITUDE DIRECTOR | 1 |
| 147 | 51CDA | PROBE, PITOT STATIC | 1 |
| 148 | 51CDE | DRAINS, PITOT STATIC LINES | 1 |
| 149 | 51CDK | COMPUTER TRANSDUCER-ALTITUDE | 1 |
| 150 | 51CDM | INDICATOR, AIRSPEED | 1 |
| [illegible] | 51CDP | ALTIMETER, AAU-19/A | 1 |
| [illegible] | 51CDR | ALTIMETER, AAU-34/A | 1 |
| [illegible] | 51CDS | INDICATOR, VERICAL VELOCITY | 1 |
| [illegible] | 51CGB | INDICATOR, ANGLE OF ATTACK | 1 |
| [illegible] | 51EOO | NAVIGATION INSTRUMENTS | 1 |
| 156 | 51EAA | CLOCK, AICRAFT, ABU-11/A | 1 |
| 157 | 51FOO | CONTROL SET, GYROSCOPE, ATTITUDE | 1 |
| 158 | 51FAO | GYROSCOPE, DISPLACEMENT | 1 |
| 159 | 51FCO | AMPLIFIER, ELETRONIC CONTROL | 1 |
| 160 | 51FEO | CONTROLLER, COMPASS SYSTEM | 1 |
| 161 | 51FFO | DETECTOR, MAGNETIC AZIMUTH | 1 |
| 162 | 51GAO | INDICATOR, HORIZONTAL SITUATION | 1 |
| 163 | 52AAO | COMPUTER | 1 |
| 164 | 52ACO | CONTROL PANEL, AUX FLIGHT | 1 |
| 165 | 52AFE | TRANSDUCER, SPEED BRAKE POSITION LVDT | 1 |
| 166 | 52BBO | COMPUTER, BETA DOT | 1 |
| 167 | 55AAC | RECORDER, SIGNAL DATA | 1 |
| 168 | 55AAB | MAGAZINE, RECORDER | |

SALVAGEABLE PARTS (CONTINUED)

| PART NO | WUC CODE | PART DESCRIPTION | QUANTITY |
|---|---|---|---|
| 169 | 55ABO | CONVERTER/MULTIPLEXER | 1 |
| 170 | 55ACO | SENSING DEVICES | 1 |
| 171 | 55ACC | ACCELEROMETER, NORMAL | 1 |
| 172 | 55ACD | ACCELEROMETER, TRANSVERSE | 1 |
| 173 | 55CAO | ENGINE TIME/TEMPERATURE RECORDER | 1 |
| 174 | 62AOO | VHF/FM COMMUNICATION | 1 |
| 175 | 62AAO | RADIO SET, RECEIVER/TRANSMITTER | 1 |
| 176 | 62ACO | CONTROL, C-921/FM-622A | 1 |
| 177 | 62ADO | ANTENNA ASSEMBLY, BLADE | 1 |
| 178 | 62CAO | RADIO SET, RECEIVER/TRANSMITTER | 1 |
| 179 | 62CCO | CONTROL UNIT, VHF/AM-807A | 1 |
| 180 | 62DAO | RADIO SET, RECEIVER/TRANSMITTER | 1 |
| 181 | 62DBO | CONTROL UNIT, C-10604 | 1 |
| 182 | 63AOO | UHF COMMUNICATIONS SYSTEM | 1 |
| 183 | 63AAO | RADIO SET, RECEIVER/TRANSMITTER | 1 |
| 184 | 63ADC | DIRECTION FINDER, UHF/ADF/ARD | 1 |
| 185 | 63AFO | REMOTE CHANNEL FREQ INDICATOR | 1 |
| 186 | 64AAO | CONTROL, INTERCOMM SET | 1 |
| 187 | 64ACO | RELAY BOX, AVIONICS | 1 |
| 188 | 65AOO | TRANSPONDER SET | 1 |
| 189 | 65AAO | RECEIVER/TRANSMITTER | 1 |
| 190 | 65ABO | CONTROL UNIT | 1 |
| 191 | 71CAO | PANEL, NAV MODE SELECT | 1 |
| 192 | 71CCO | RELAY BOX, NAV MODE, 51 RELAYS | 1 |
| 193 | 71DBO | RADIO RECEIVER | 1 |
| 194 | 71ZAO | RECEIVER/TRANSMITTER | 1 |
| 195 | 71ZBO | ADAPTER, MX-9577/A | 1 |
| 196 | 71ZDO | CONTROL PANEL ARN-116 | 1 |
| 197 | 72AAO | ENCODER/TRANSPONDER | 1 |
| 198 | 74AOO | HEAD-UP DISPLAY | 1 |
| 199 | 74AAO | PROJECTION UNIT, HEAD-UP DISPLAY | 1 |
| 200 | 74ABO | SYMBOL GENERATOR | 1 |
| 201 | 74ACO | CONTROL UNIT | 1 |
| 202 | 74COO | TARGET ID SET LASER, PAVE PENNY | 1 |
| 203 | 74CAO | DETECTOR, LASER ILLUMINATED TARGET | 1 |
| 204 | 74CBO | ADAPTER, CONTROL DETECTOR | 1 |
| 205 | 74DOO | GUN CAMERA SYSTEM | 1 |
| 206 | 74DAD | ELECTRONICS MODULE | 1 |
| 207 | 74DCO | MAGAZINE 100 FT LB-41A | 1 |
| 208 | 74EOO | TV MONITOR INSTALLATION (CARDION) | 1 |
| 209 | 74EAO | DISPLAY UNIT, FIRE CONTROL | 1 |
| 210 | 74EBO | CONTROL UNIT, FIRE CONTROL | 1 |
| 211 | 74FAO | DISPLAY UNIT, TV MONITOR | 1 |
| 212 | 74FBO | CONTROL UNIT, TV MONITOR | 1 |
| 213 | 75AAO | GUN, 30 MM | 1 |
| 214 | 75ABO | DRUM, AMMUNITION | 1 |
| 215 | 75ADO | GUN, 30 MM, OTHER | 1 |
| 216 | 75AFO | ACCESS UNIT, WEAPON DELIVERY | 1 |
| 217 | 75ALO | BELT, CONVEYOR | 1 |
| 218 | 75AMO | WEAPON DELIVERY, OTHER | 1 |
| 219 | 75ANO | WEAPON DELIVERY, OTHER | 1 |
| 220 | 75ASO | ELECTRONIC CONTROL UNIT | 1 |
| 221 | 75AUO | DRIVE SYSTEM | 1 |
| 222 | 75AUB | DRIVE, HYDRAULIC MOTOR | 1 |
| 223 | 75AWO | TRANSFER UNIT | 1 |
| 224 | 75BOO | ARMAMENT CONTROL SYSTEM | 1 |
| 225 | 75BAO | PANEL, ARMAMENT CONTROL | 1 |

SALVAGEABLE PARTS (CONTINUED)

| PART NO | WUC CODE | PART DESCRIPTION | QUANTITY |
|---|---|---|---|
| 226 | 75BAS | INDICATOR, STORES LOADING DISPLAY | 1 |
| 227 | 75BCO | INTERSTATION CONTROL UNIT | 1 |
| 228 | 75BDO | WEAPON DELIVERY, OTHER | 1 |
| 229 | 75BEO | WEAPON DELIVERY, OTHER | 1 |
| 230 | 75COO | EXTERNAL ARMAMENT SYSTEM | 1 |
| 231 | 75CAO | PYLON, WING WEAPON STATION 1 & 11 | 1 |
| 232 | 75CCO | PYLON, WING WEAPON STATION 2 & 10 | 1 |
| 233 | 75CCF | SEAL ASSEMBLY, PYLON | 1 |
| 234 | 75CDO | PYLON, WING WEAPON STATION 4 & 8 | 1 |
| 235 | 75DOO | CABLE ADAPTERS | 1 |
| 236 | 75DCO | TER-9 ADAPTER | 1 |
| 237 | 75DDO | LAU-88 ADAPTER | 1 |
| 238 | 75FAO | BOME RACK, MAU-40/A | 1 |
| 239 | 75FBO | BOMB RACK, MAU-50/A | 1 |
| 240 | 75FDO | TRIPLE-EJECTOR RACK, TER-9A | 1 |
| 241 | 76AAO | SIGNAL PROCESSOR | 1 |
| 242 | 76ABO | AMPLIFIER, DETECTORS | 1 |
| 243 | 76AFO | INDICATOR, AZIMUTH | 1 |
| 244 | 76ARO | COMPASS SAIL AMPLIFIER DETECTOR | 1 |
| 245 | 76ASO | INDICATOR, CONTROL | 1 |
| 246 | 76POD | ECM POD | 1 |
| 247 | 76EEO | RECEIVER, FREQ SELECTIVE | 1 |
| 248 | 91BEA | CYLINDER ASSEMBLY | 1 |
| 249 | 91BEC | HOSE, EMERGENCY OXYGEN | 1 |
| 250 | 13AHAL | TIRE, MAIN LANDING GEAR, L H | 1 |
| 251 | 13AHAR | TIRE, MAIN LANDING GEAR, R H | 1 |

## IV.4.3 CANNIBALIZATION DATA

(CARD TYPES #35/1, #35/2, AND #35/3)

THE NOMINAL TASK TIME FOR CANNIBALIZATION OF A PART IS 150 % (CANMUL ON CT #3/1) OF THE NOMINAL TIME FOR THE TASK SEGMENT THAT SPECIFIES THAT PART.

*** INDICATES THAT THE PART CANNOT BE CANNIBALIZED

| PART NO | WUC CODE | PART DESCRIPTION | ADDITIONAL CANNIBALIZATION TIME (MIN) | PROB OF BROKEN PART |
|---|---|---|---|---|
| 1 | 11AFO | WINDSHIELD ASSEMBLY | 0 | 0 |
| 2 | 11AFC | GLASS, SIDE WINDSHIELD, L.H./R.H. | 0 | 0 |
| 3 | 11ALO | BALLAST, VARIABLE | 0 | 0 |
| 4 | 11ARB | F2, OXYGEN CONVERTER | 0 | 0 |
| 5 | 11ARE | F5, SAFING AND GUN REMOVAL ACCESS | 0 | 0 |
| 6 | 11ARV | F14, ARMAMENT CIRCUIT BREAKER ACCESS | 47 | 0 |
| 7 | 11ASH | F44, AVIONICS ACCESS | 0 | 0 |
| 8 | 11ASK | F61, INVERTER, BATTERY RELAY BOX ACCESS | 0 | 0 |
| 9 | 11ASP | F65, BATTERY ACCESS | 47 | 0 |
| 10 | 11AST | F69, LADDER COMPARTMENT | 0 | 0 |
| 11 | 11ATF | F103, AVIONICS ACCESS | 0 | 0 |
| 12 | 11BOO | FUSELAGE, CENTER SECTION, STATION | 0 | 0 |
| 13 | 11BNA | F46, ELECTRICAL TROUGH ACCESS | 0 | 0 |
| 14 | 11COO | FUSELAGE, AFT SECTION, STATION | 0 | 0 |
| 15 | 11CEN | F45, ECS AND FUEL ACCESS | 0 | 0 |
| 16 | 11CEP | F47, AUXILIARY POWER UNIT ACCESS | 0 | 0 |
| 17 | 11DOO | WING ASSEMBLY | 0 | 0 |
| 18 | 11DGK | W21, LOWER PANEL ACCESS, RIGHT | 0 | 0 |
| 19 | 11DHK | W22, LOWER PANEL ACCESS, LEFT | 0 | 0 |
| 20 | 11DQB | W24, ACCESS PANEL OUTBOARD | 0 | 0 |
| 21 | 11EOO | EMPENNAGE | 0 | 0 |
| 22 | 11EEB | E3, COMPASS FLUX GATE ACCESS | 0 | 0 |
| 23 | 11EEF | E11, RUDDER TOP HINGE ACCESS, L.H. | 0 | 0 |
| 24 | 11EFF | E12, RUDDER TOP HINGE ACCESS, R.H. | 0 | 0 |
| 25 | 11FOO | ENGINE NACELLE, L.H./R.H. | 0 | 0 |
| 26 | 11FCC | N5, ENGINE LINES OAD ACCESS | 0 | 0 |
| 27 | 12AOO | COCKPIT | 0 | 0 |
| 28 | 12AAB | BOTTLE ASSEMBLY, INSULATED VACUUM | 0 | 0 |
| 29 | 12AAK | GLARESHIELD, MAIN INSTRUMENT PANEL | 0 | 0 |
| 30 | 12AAL | ANTI-REFLECTION SHIELD | 0 | 0 |
| 31 | 12BAO | LADDER, CREW BOARDING | 0 | 0 |
| 32 | 12GGA | ACTUATOR ASSEMBLY, CANOPY | 0 | 0 |
| 34 | 13BHA | TIRE, NOSE LANDING GEAR | 0 | 0 |
| 35 | 13AOO | MAIN LANDING GEAR | 0 | 0 |
| 36 | 13ADO | ACTUATOR, MAIN LAND GEAR RETRACTION/DRAG | 0 | 0 |
| 37 | 13BDO | ACTUATOR, NOSE LAND GEAR RETRACTION/DRAG | 0 | 0 |
| 38 | 13COO | NOSE WHEEL STEERING SYSTEM | 0 | 0 |
| 39 | 13DAO | BRAKE ASSEMBLY, R.H./L.H. | 0 | 0 |
| 40 | 13DFO | ANTI-SKID SYSTEM | 0 | 0 |
| 41 | 13DFA | CONTROL UNIT, ANTI-SKID | 0 | 0 |
| 42 | 13GAA | PANEL, LANDING GEAR CONTROL | 90 | 0 |
| 43 | 13GAC | VALVE, LANDING GEAR SELECTOR | 335 | 0 |
| 44 | 14ABO | EMERGENCY FLIGHT CONTROL PANEL | 0 | 0 |
| 45 | 14CCA | ACTUATOR, AILERON | 0 | 0 |
| 46 | 14CDA | ACTUATOR, SERVO TAB SHIFTER | 0 | 0 |
| 47 | 14CDB | ACTUATOR, TRIM STEPPER | 0 | 0 |
| 48 | 14EOO | PITCH CONTROL SYSTEM | 0 | 0 |

CANNIBALIZATION DATA (CONTINUED)

| PART NO | WUC CODE | PART DESCRIPTION | ADDITIONAL CANNIBALIZATION TIME (MIN) | PROB OF BROKEN PART |
|---|---|---|---|---|
| 49 | 14EAO | ELEVATOR ASSEMBLY, L.H./R.H. | 0 | 0 |
| 50 | 14EAA | TAB TRIM | 0 | 0 |
| 51 | 14EBM | TORQUESHAFT, ELEVATOR ACTUATOR | 0 | 0 |
| 52 | 14ECA | ACTUATOR, ELEVATOR | 245 | 0 |
| 53 | 14EDA | ACTUATOR, PITCH TRIM | 341 | 0 |
| 54 | 14EDB | ACTUATOR, PITCH TRIM TAB | 341 | 0 |
| 55 | 14GAO | RUDDER ASSEMBLY, L.H./R.H. | 0 | 0 |
| 56 | 14GCA | ACTUATOR, RUDDER | 0 | 0 |
| 57 | 14KAO | FLAP ASSEMBLY, INBOARD | 0 | [illegible] |
| 58 | 14KBO | FLAP ASSEMBLY, OUTBOARD | 0 | [illegible] |
| 59 | 14KDA | ACTUATOR, FLAP | 0 | [illegible] |
| 60 | 14NAO | SLAT ASSEMBLY | 155 | [illegible] |
| 61 | 14NCA | ACTUATOR, SLAT | 0 | [illegible] |
| 62 | 14NCB | VALVE ASSEMBLY, CONTROL | 0 | [illegible] |
| 63 | 23000 | TURBO FAN POWER PLANT SYSTEM | 269 | [illegible] |
| 64 | 23ALF | AFT SHROUD DRAIN SEAL | 0 | [illegible] |
| 65 | 23AEO | SEAL ASSEMBLY, FAN AIR DUCT | 0 | 0 |
| 66 | 23AHO | ENGINE TO NACELLE PYLON ASSEMBLY | 0 | [illegible] |
| 67 | 23CBB | FAN FORWARD CASING | 0 | [illegible] |
| 68 | 23CPD | INTERTURBINE SEAL AND LINER | 0 | [illegible] |
| 69 | 23CSD | C-SUMP REAR COVER | 0 | [illegible] |
| 70 | 23DCA | MAIN FUEL CONTROL | 0 | [illegible] |
| 71 | 23DCJ | MAIN FUEL FILTER | 0 | [illegible] |
| 72 | 23DJL | AMPLIFIER CONTROL, T5 | [illegible] | [illegible] |
| 73 | 23DKB | OIL FILLER TUBE | 0 | [illegible] |
| 74 | 23DLF | LUBE FILTER ELEMENT | 0 | [illegible] |
| 75 | 23GCA | GENERATOR, TACH CORE SPEED (NG) | 0 | [illegible] |
| 76 | 23GCB | INDICATOR, TACH, CORE SPEED (NG) | 0 | [illegible] |
| 77 | 23GCC | INDICATOR, TACH, FAN SPEED (NF) | 0 | [illegible] |
| 78 | 23GEA | INDICATOR, INTERTURBINE TEMPERATURE | 0 | [illegible] |
| 79 | 23GGB | INDICATOR, FUEL FLOW, LEFT ENGINE | 0 | [illegible] |
| 80 | 23GGC | INDICATOR, FUEL FLOW, RIGHT ENGINE | 0 | [illegible] |
| 81 | 23KAO | QUADRANT ASSEMBLY, ENGINE CONTROL | 0 | [illegible] |
| 82 | 23CAC | FAN BLADE | 0 | [illegible] |
| 83 | 23JAO | STARTER, AIR TURBINE | 0 | [illegible] |
| 84 | 23JBA | VALVE, ENGINE START, SOLENOID SHUT-OFF | 0 | [illegible] |
| 85 | 24AFA | FUEL CONTROL | 0 | [illegible] |
| 86 | 24AHA | CONTROL, ELETRONIC | 0 | [illegible] |
| 87 | 24AHE | THERMOCOUPLE, EGT | 0 | [illegible] |
| 88 | 41AAO | PANEL, ENVIRONMENTAL CONTROL | 0 | [illegible] |
| 89 | 41ABA | VALVE, TEMPERATURE CONTROL | 0 | [illegible] |
| 90 | 41ABF | CONTROLLER, CABIN TEMPERATURE SYSTEM | 0 | [illegible] |
| 91 | 41BOO | AIR CONDITIONING SYSTEM | 0 | [illegible] |
| 92 | 41BAA | AIR CYCLE MACHINE | 0 | [illegible] |
| 93 | 41BAB | HOUSING AND ASPIRATOR ASSEMBLY | 0 | [illegible] |
| 94 | 41BBD | DUCTS, LEFT SIDE, SERVICE AIR | 0 | 0 |
| 95 | 41BBM | OUTLET ASSEMBLY, CABIN AIR | 0 | [illegible] |
| 96 | 41BBN | VALVE, MANUAL CABIN AIR DIRECTOR | 0 | [illegible] |
| 97 | 41BCB | VALVE, PRESSURE REGULATING/SHUT-OFF | 317 | [illegible] |
| 98 | 41CAA | CONTROL UNIT, ANTI-ICE SYSTEM | 0 | [illegible] |
| 99 | 41GOO | WASH SYSTEMS | 0 | [illegible] |
| 100 | 42AOO | AC POWER GENERATING SYSTEM | ... | [illegible] |
| 102 | 42AAO | INTEGRATED DRIVE GENERATOR, L.H./R.H. | 203 | [illegible] |
| 103 | 42AEO | CONTROL UNIT, GENERATOR L.H./R.H. | 101 | [illegible] |
| 104 | 42BAO | INVERTER, STANDBY | 161 | [illegible] |
| 105 | 42FOO | AC/DC DISTRIBUTION SYSTEM | ... | [illegible] |

CANNIBALIZATION DATA (CONTINUED)

| PART NO | WUC CODE | PART DESCRIPTION | ADDITIONAL CANNIBALIZATION TIME (MIN) | PROB OF BROKEN PART |
|---|---|---|---|---|
| 106 | 42FAB | BOX ASSEMBLY, MISC RELAYS | 60 | 0 |
| 107 | 42FAC | BOX ASSEMBLY, COCKPIT AC POWER RELAYS | 60 | 0 |
| 108 | 42FAE | BOX ASSEMBLY, FUEL/ENGINE RELAYS | 60 | 0 |
| 109 | 42FAG | BOX ASSEMBLY, LANDING GEAR RELAYS | 60 | 0 |
| 110 | 44AAO | CONTROL PANEL, EXTERIOR & INTERIOR LIGHT | 0 | 0 |
| 111 | 44BBO | POWER SUPPLY, STROBE LIGHTS | 0 | 0 |
| 112 | 44BEB | LIGHT, LOWER FUSELAGE | 83 | 0 |
| 113 | 44BEC | LIGHT, FORMATION/TAIL FLOOD, VERT STAB | 0 | 0 |
| 114 | 44COO | INTERIOR LIGHTING SYSTEM | 0 | 0 |
| 115 | 44CDO | PANEL ASSEMBLY, AUX LIGHTING | 0 | 0 |
| 116 | 44CFO | PANEL, MASTER CAUTION ANNUNCIATOR | 0 | 0 |
| 117 | 44CGA | UTILITY LIGHT | 0 | 0 |
| 118 | 45AOO | LEFT HYDRAULIC POWER SYSTEM | 0 | 0 |
| 119 | 45AAA | PUMP, HYDRAULIC ENGINE DRIVEN, LEFT | 317 | 0 |
| 120 | 45ACL | VALVE, SYSTEM SHUT OFF | 0 | 0 |
| 121 | 45ACT | ACCUMULATOR, BOOT STRAP | 0 | 0 |
| 122 | 45ADO | LEFT HYDRAULIC RESERVOIR ASSEMBLY | 0 | 0 |
| 123 | 45AFD | HOSE, PRESSURE, ENGINE/FUSELAGE PYLONS | 0 | 0 |
| 124 | 45BAA | PUMP, HYDRAULIC ENGINE DRIVEN, RIGHT | 0 | 0 |
| 125 | 45BDO | RIGHT HYDRAULIC RESERVOIR ASSEMBLY | 245 | 0 |
| 126 | 45DAO | PUMP, HYDRAULIC, 10 GPM | 0 | 0 |
| 127 | 46AEO | FUEL TANK, EXTERNAL, 600 GALLON | 0 | 0 |
| 128 | 46BDA | RELAY, ELECTRICAL | 0 | 0 |
| 129 | 46BDK | AMPLIFIER, SIGNAL | 90 | 0 |
| 130 | 46DAA | INDICATOR, FUEL QUANTITY & TOTALIZER | 0 | 0 |
| 131 | 46DAD | INTERMEDIATE DEVICE | 90 | 0 |
| 132 | 46EAO | PUMP ASSY, LEFT/RIGHT MAIN TANK BOOST | 0 | 0 |
| 133 | 46FBF | VALVE, RIGHT WING PILOT SHUTOFF | 0 | 0 |
| 134 | 47A77 | CONNECTORS, AIRCRAFT ELECTRICAL | 0 | 0 |
| 135 | 47AAO | CONVERTER ASSEMBLY, LOX, MB-5/A | 0 | 0 |
| 136 | 47AAD | CAP, BUILD-UP AND VENT | 0 | 0 |
| 137 | 47ABA | REGULATOR, DILUTER DEMAND, CRU-73A | 0 | 0 |
| 138 | 47ACA | INDICATOR, LOX QUANTITY, GMU-37A | 0 | 0 |
| 139 | 49AAB | SENSOR, 650 DEGREES F | 227 | 0 |
| 140 | 49BOO | FIRE EXTINGUISHING SYSTEM | 0 | 0 |
| 141 | 41BAD | CANISTERS, EXTINGUISHING SYSTEM | 0 | 0 |
| 142 | 51INS | INSTRUMENTS | 0 | 0 |
| 143 | 51COO | FLIGHT INSTRUMENTS | 0 | 0 |
| 144 | 51CAA | ACCELEROMETER, NORMAL | 0 | 0 |
| 145 | 51CAB | INDICATOR, STANDBY ATTITUDE | 65 | 0 |
| 146 | 51CAC | INDICATOR, ATTITUDE DIRECTOR | 0 | 0 |
| 147 | 51CDA | PROBE, PITOT STATIC | 65 | 0 |
| 148 | 51CDE | DRAINS, PITOT STATIC LINES | 65 | 0 |
| 149 | 51CDK | COMPUTER TRANSDUCER-ALTITUDE | 0 | 0 |
| 150 | 51CDM | INDICATOR, AIRSPEED | 0 | 0 |
| 151 | 51CDP | ALTIMETER, AAU-19/A | 65 | 0 |
| 152 | 51CDR | ALTIMETER, AAU-34/A | 0 | 0 |
| 153 | 51CDS | INDICATOR, VERICAL VELOCITY | 0 | 0 |
| 154 | 51CGB | INDICATOR, ANGLE OF ATTACK | 65 | 0 |
| 155 | 51EOO | NAVIGATION INSTRUMENTS | *** | - |
| 156 | 51EAA | CLOCK, AICRAFT, ABU-11/A | 60 | 0 |
| 157 | 51FOO | CONTROL SET, GYROSCOPE, ATTITUDE | 0 | 0 |
| 158 | 51FAO | GYROSCOPE, DISPLACEMENT | 0 | 0 |
| 159 | 51FCO | AMPLIFIER, ELETRONIC CONTROL | 0 | 0 |
| 160 | 51FEO | CONTROLLER, COMPASS SYSTEM | 0 | 0 |
| 161 | 51FFO | DETECTOR, MAGNETIC AZIMUTH | 0 | 0 |

INITIAL STOCKS AND STATUS OF AIRBASE RESOURCES
SPARE PARTS

CANNIBALIZATION DATA (CONTINUED)

| PART NO | WUC CODE | PART DESCRIPTION | ADDITIONAL CANNIBALIZATION TIME (MIN) | PROB OF BROKEN PART |
|---|---|---|---|---|
| 162 | 51GAO | INDICATOR, HORIZONTAL SITUATION | 71 | 0 |
| 163 | 52AAO | COMPUTER | 173 | 0 |
| 164 | 52ACO | CONTROL PANEL, AUX FLIGHT | 0 | 0 |
| 165 | 52AFB | TRANSDUCER, SPEED BRAKE POSITION LVDT | 173 | 0 |
| 166 | 52BBO | COMPUTER, BETA DOT | 120 | 0 |
| 167 | 55AAO | RECORDER, SIGNAL DATA | 0 | 0 |
| 168 | 55AAB | MAGAZINE, RECORDER | 0 | 0 |
| 169 | 55ABO | CONVERTER/MULTIPLEXER | 0 | 0 |
| 170 | 55ACO | SENSING DEVICES | 0 | 0 |
| 171 | 55ACC | ACCELEROMETER, NORMAL | 0 | 0 |
| 172 | 55ACD | ACCELEROMETER, TRANSVERSE | 0 | 0 |
| 173 | 55CAO | ENGINE TIME/TEMPERATURE RECORDER | 60 | 0 |
| 174 | 62AOO | VHF/FM COMMUNICATION | 0 | 0 |
| 175 | 62AAO | RADIO SET, RECEIVER/TRANSMITTER | 175 | 0 |
| 176 | 62ACO | CONTROL, C-921/FM-622A | 0 | 0 |
| 177 | 62ADO | ANTENNA ASSEMBLY, BLADE | 0 | 0 |
| 178 | 62CAO | RADIO SET, RECEIVER/TRANSMITTER | 107 | 0 |
| 179 | 62CCO | CONTROL UNIT, VHF/AM-807A | 0 | 0 |
| 180 | 62DAO | RADIO SET, RECEIVER/TRANSMITTER | 113 | 0 |
| 181 | 62DBO | CONTROL UNIT, C-10604 | 113 | 0 |
| 182 | 63AOO | UHF COMMUNICATIONS SYSTEM | 0 | 0 |
| 183 | 63AAO | RADIO SET, RECEIVER/TRANSMITTER | 65 | 0 |
| 184 | 63ADO | DIRECTION FINDER, UHF/ADF/ARD | 65 | 0 |
| 185 | 63AFO | REMOTE CHANNEL FREQ INDICATOR | 0 | 0 |
| 186 | 64AAO | CONTROL, INTERCOMM SET | 0 | 0 |
| 187 | 64ACO | RELAY BOX, AVIONICS | 0 | 0 |
| 188 | 65AOO | TRANSPONDER SET | 0 | 0 |
| 189 | 65AAO | RECEIVER/TRANSMITTER | 203 | 0 |
| 190 | 65ABO | CONTROL UNIT | 0 | 0 |
| 191 | 71CAO | PANEL, NAV MODE SELECT | 0 | |
| 192 | 71CCO | RELAY BOX, NAV MODE, 51 RELAYS | 0 | 0 |
| 193 | 71DBO | RADIO RECEIVER | 180 | 0 |
| 194 | 71ZAO | RECEIVER/TRANSMITTER | 143 | 0 |
| 195 | 71ZBO | ADAPTER, MX-9577/A | 143 | 0 |
| 196 | 71ZDO | CONTROL PANEL ARN-118 | 143 | 0 |
| 197 | 72AAO | ENCODER/TRANSPONDER | 0 | 0 |
| 198 | 74AOO | HEAD-UP DISPLAY | 0 | 0 |
| 199 | 74AAO | PROJECTION UNIT, HEAD-UP DISPLAY | 90 | 0 |
| 200 | 74ABO | SYMBOL GENERATOR | 90 | 0 |
| 201 | 74ACO | CONTROL UNIT | 0 | 0 |
| 202 | 74COO | TARGET ID SET LASER, PAVE PENNY | 0 | 0 |
| 203 | 74CAO | DETECTOR, LASER ILLUMINATED TARGET | 0 | 0 |
| 204 | 74CBO | ADAPTER, CONTROL DETECTOR | 101 | 0 |
| 205 | 74DOO | GUN CAMERA SYSTEM | 0 | 0 |
| 206 | 74DAO | ELECTRONICS MODULE | 0 | 0 |
| 207 | 74DCO | MAGAZINE 100 FT LB-41A | 0 | 0 |
| 208 | 74EOO | TV MONITOR INSTALLATION (CARDION) | 0 | 0 |
| 209 | 74EAO | DISPLAY UNIT, FIRE CONTROL | 143 | 0 |
| 210 | 74EBO | CONTROL UNIT, FIRE CONTROL | 143 | 0 |
| 211 | 74FAO | DISPLAY UNIT, TV MONITOR | 0 | 0 |
| 212 | 74FBO | CONTROL UNIT, TV MONITOR | 0 | 0 |
| 213 | 75AAO | GUN, 30 MM | 0 | 0 |
| 214 | 75ABO | DRUM, AMMUNITION | 0 | 0 |
| 215 | 75ADO | GUN, 30 MM, OTHER | 0 | 0 |
| 216 | 75AFO | ACCESS UNIT, WEAPON DELIVERY | 0 | |
| 217 | 75ALO | BELT, CONVEYOR | 0 | |

CANNIBALIZATION DATA (CONTINUED)

| PART NO | WUC CODE | PART DESCRIPTION | ADDITIONAL CANNIBALIZATION TIME (MIN) | PROB OF BROKEN PART |
|---|---|---|---|---|
| 218 | 75AMO | WEAPON DELIVERY, OTHER | 0 | 0 |
| 219 | 75ANO | WEAPON DELIVERY, OTHER | 0 | 0 |
| 220 | 75ASO | ELECTRONIC CONTROL UNIT | 0 | 0 |
| 221 | 75AUO | DRIVE SYSTEM | 0 | 0 |
| 222 | 75AUB | DRIVE, HYDRAULIC MOTOR | 197 | 0 |
| 223 | 75AWO | TRANSFER UNIT | 0 | 0 |
| 224 | 75BOO | ARMAMENT CONTROL SYSTEM | 0 | 0 |
| 225 | 75BAO | PANEL, ARMAMENT CONTROL | 65 | 0 |
| 226 | 75BAS | INDICATOR, STORES LOADING DISPLAY | 65 | 0 |
| 227 | 75BCO | INTERSTATION CONTROL UNIT | 65 | 0 |
| 228 | 75BDO | WEAPON DELIVERY, OTHER | 65 | 0 |
| 229 | 75BEO | WEAPON DELIVERY, OTHER | 0 | 0 |
| 230 | 75COO | EXTERNAL ARMAMENT SYSTEM | 0 | 0 |
| 231 | 75CAO | PYLON, WING WEAPON STATION 1 & 11 | 0 | 0 |
| 232 | 75CCO | PYLON, WING WEAPON STATION 2 & 10 | 101 | 0 |
| 232 | 75CCO | PYLON, WING WEAPON STATION 2 & 10 | 0 | 0 |
| 233 | 75CCF | SEAL ASSEMBLY, PYLON | 0 | 0 |
| 234 | 75CDO | PYLON, WING WEAPON STATION 4 & 8 | 0 | 0 |
| 235 | 75DOO | CABLE ADAPTERS | 0 | 0 |
| 236 | 75DCO | TER-9 ADAPTER | 0 | 0 |
| 237 | 75DDO | LAU-88 ADAPTER | 0 | 0 |
| 238 | 75FAO | BOMB RACK, MAU-40/A | 0 | 0 |
| 239 | 75FBO | BOMB RACK, MAU-50/A | 0 | 0 |
| 240 | 75FDO | TRIPLE-EJECTOR RACK, TER-9A | 0 | 0 |
| 241 | 76AAO | SIGNAL PROCESSOR | 0 | 0 |
| 242 | 76ABO | AMPLIFIER, DETECTORS | 0 | 0 |
| 243 | 76AFO | INDICATOR, AZIMUTH | 0 | 0 |
| 244 | 76ARO | COMPASS SAIL AMPLIFIER DETECTOR | 0 | 0 |
| 245 | 76ASO | INDICATOR, CONTROL | 0 | 0 |
| 246 | 76POD | ECM POD | ... | - |
| 247 | 76EEO | RECEIVER, FREQ SELECTIVE | 65 | 0 |
| 248 | 91BEA | CYLINDER ASSEMBLY | 0 | 0 |
| 249 | 91BEC | HOSE, EMERGENCY OXYGEN | 95 | 0 |
| 250 | 13AHAL | TIRE, MAIN LANDING GEAR, L.H. | 0 | 0 |
| 251 | 13AHAR | TIRE, MAIN LANDING GEAR, R.H. | 0 | 0 |

## IV.5 TRAP DATA

BASE #1 (MOB)

(CARD TYPE #25)

| TRAP TYPE | DESCRIPTION | STOCK LEVEL |
|---|---|---|
| 1 | ECM ADAPTER | 144 |
| 2 | LAU-88 | 288 |
| 6 | LAU-117 | 288 |
| 11 | ECM POD | 72 |
| 16 | GUN AMMO TUBES | 5000 |

## IV.6 POL DATA

(CARD TYPE #27)

| BASE # | POL STOCK LEVEL |
|---|---|
| 1 | 30000 |
| 2 | 2000 |

# CHAPTER V

# COMMUNICATION SYSTEM DATA

## V.1 INTRA-THEATER SHIPMENT DATA

(CARD TYPES #32/1 AND #32/2)

| FROM BASE | TO BASE | DEPARTURE FREQ | DEPARTURE HOURS | DEPARTURE DELAY | DEPARTURE DIST | TRANSIT TIME | TRANSIT DIST | ARRIVAL PROBABILITY |
|---|---|---|---|---|---|---|---|---|
| 1 | 2 | 1 | 18 | 0 | 0 | 12HR | 0 | .98 |
| 2 | 1 | 1 | 18 | 0 | 0 | 12HR | 0 | .98 |

THERE IS A DAILY SHIPMENT FROM BASE #1 (MOB) TO BASE #2 (COB) AT 1800 HOURS. THERE IS ALSO A DAILY SHIPMENT FROM BASE #2 (COB) TO BASE #1 (MOB) AT 1800 HOURS.

## V.2 RESOURCE RESUPPLY DATA

(CARD TYPE #33)

| RESOURCE CLASS | RESUPPLY TIME DAYS | RESUPPLY TIME HOURS | DIST | DESCRIPTION |
|---|---|---|---|---|
| 8 | 7 | 0 | 0 | |

## V.3 NRTS PARTS SHIPMENT DATA

(CARD TYPE #34)

| SENDING BASE# | PART FROM | PART TO | RECEIVING BASE# | DESCRIPTION |
|---|---|---|---|---|
| 1 | 1 | 300 | 2 | PARTS 1-300 ON BASE #1 ARE NRTSED TO BASE #2 |
| 2 | 1 | 300 | 9 | PARTS 1-300 ON BASE #2 ARE NRTSED TO CONUS |

# CHAPTER VI

# CROSS-REFERENCES

## VI 1 TASK CROSS-REFERENCE

| TSAR TASK | TASK DESCRIPTION | PAGES |
|---|---|---|
| 1 | FUSELAGE, FORWARD SECTION | III-34,49 |
| 25 | FUSELAGE, CENTER SECTION | III-7,51 |
| 32 | FUSELAGE, AFT SECTION | III-7,52 |
| 41 | WING ASSEMBLY | III-7,53 |
| 54 | EMPENNAGE | III-7,54 |
| 63 | ENGINE NACELLE, L.H./R.H. | III-7,55 |
| 73 | COCKPIT | III-7,56 |
| 82 | LADDER, CREW BOARDING | III-6,57 |
| 92 | CANOPY INSTALLATION | III-40,58 |
| 106 | EJECTION SEAT SYSTEM | III-13,59 |
| 109 | LANDING GEAR | III-6,59 |
| 112 | MAIN LANDING GEAR | III-40,60 |
| 125 | NOSE LANDING GEAR | III-6,61 |
| 135 | NOSE WHEEL STEERING SYSTEM | III-9,62 |
| 144 | WHEEL BRAKES | III-9,63 |
| 157 | LANDING GEAR CONTROL SYSTEM | III-9,64 |
| 165 | LANDING GEAR INDICATING SYSTEM | III-9,64 |
| 168 | MISC LANDING GEAR COMPONENTS | III-15,65 |
| 171 | PILOT CONTROLS | III-9,66 |
| 179 | ROLL CONTROL SYSTEM | III-40,67 |
| 192 | PITCH CONTROL SYSTEM | III-40,68 |
| 209 | YAW CONTROL SYSTEM | III-40,69 |
| 217 | TRAILING EDGE FLAP SYSTEM | III-40,70 |
| 234 | SPEED BRAKE SYSTEM | III-40,71 |
| 241 | LEADING EDGE SLAT SYSTEM | III-40,72 |
| 258 | TURBO FAN POWER PLANT SYSTEM | III-17,73 |
| 301 | AUXILIARY POWER PLANT | III-17,76 |
| 312 | COCKPIT AIR TEMP CONTROL SYSTEM | III-12,77 |
| 318 | AIR CONDITIONING SYSTEM | III-12,78 |
| 334 | PRESSURIZATION | III-12,79 |
| 338 | ANTI-ICE SYSTEM | III-9,79 |
| 340 | WASH SYSTEMS | III-12,80 |
| 343 | AC POWER GENERATING SYSTEM | III-17,81 |
| 350 | EMERGENCY AC POWER SYSTEM | III-9,82 |
| 355 | EMERGENCY DC POWER SYSTEM | III-9,82 |
| 358 | AC/DC DISTRUBUTION SYSTEM | III-9,83 |
| 367 | LIGHTING CONTROLS | III-9,84 |
| 373 | EXTERIOR LIGHTING SYSTEM | III-9,85 |
| 383 | INTERIOR LIGHTING SYSTEM | III-9,86 |
| 395 | LEFT HYDRAULIC POWER SYSTEM | III-34,87 |
| 410 | RIGHT HYDRAULIC POWER SYSTEM | III-15,88 |
| 418 | APU DRIVEN HYDRAULIC SYSTEM | III-15,86 |
| 420 | FUEL TANK INSTALLATION | III-44,89 |
| 429 | AERIAL REFUELING RECEPTACLE | III-44,90 |
| 435 | FUEL VENT/PRESSURE INSTALLATION | III-44,91 |
| 441 | FUEL QUANTITY INDICATING SYSTEM | III-20,92 |
| 448 | FUEL FEED SYSTEM | III-44,93 |
| 457 | GROUND REFUELING SYSTEM | III-44,94 |
| 464 | LOX SUPPLY SYSTEM | III-12,95 |
| 480 | FIRE DETECTION SYSTEM | III-9,96 |
| 488 | FIRE EXTINGUISHING SYSTEM | III-9,97 |
| 495 | INERTIAL NAVIGATION SYSTEM | III-31,98 |
| 502 | FLIGHT INSTRUMENTS | III-20,99 |
| 518 | NAVIGATION INSTRUMENTS | III-20,101 |
| 524 | CONTROL SET, GYROSCOPE, ATTITUDE | III-20,102 |

TASK CROSS-REFERENCE (CONTINUED)

| TSAR TASK | TASK DESCRIPTION | PAGES |
|---|---|---|
| 534 | INDICATOR, HORIZONTAL SITUATION | III-20,103 |
| 539 | STABILITY AUGMENT SYSTEM | III-18,103 |
| 543 | BETA DOT COMPUTER SYSTEM | III-16,104 |
| 545 | VGH RECORDING SYSTEM | III-20,105 |
| 556 | ENGINE TIME/TEMP RECORDER | III-20,106 |
| 560 | VHF/FM COMMUNICATION SYSTEM | III-25,106 |
| 565 | VHF/AM COMMUNICATION SYSTEM | III-25,107 |
| 568 | VHF/AM COMMUNICATION SYSTEM | III-25,107 |
| 571 | UHF COMMUNICATION SYSTEM | III-25,108 |
| 576 | INTERCOMMUNICATION SYSTEM | III-25,108 |
| 579 | TRANSPONDER SET, AN/APX-101 | III-27,109 |
| 585 | NAV MODE CONTROLS | III-27,110 |
| 588 | INSTRUMENT LANDING SYSTEMS | III-27,110 |
| 590 | TACAN SYSTEM, AN/ARN-118 | III-27,111 |
| 594 | RADAR NAVIGATION SYSTEM | III-27,111 |
| 596 | HEAD-UP DISPLAY SYSTEM | III-32,112 |
| 601 | TARGET ID SET LASER, PAVE PENNY | III-32,113 |
| 609 | GUN CAMERA SYSTEM | III-38,114 |
| 616 | TV MONITOR, CARDION | III-32,115 |
| 622 | TV MONITOR, HARTMAN | III-32,116 |
| 625 | GUN SYSTEM, 30MM | III-34,116 |
| 643 | ARMAMENT CONTROL SYSTEM | III-34,118 |
| 653 | PYLON, WING WEAPON STATION | III-34,119 |
| 664 | CABLE ADAPTERS | III-34,120 |
| 668 | RACKS | III-34,121 |
| 675 | RADAR HOMING AND WARNING SYSTEM | III-29,122 |
| 684 | ECM POD | III-29,123 |
| 686 | COMPASS TIE SYSTEM | III-29,123 |
| 688 | PARACHUTE SYSTEM | III-12,124 |
| 700 | REFUEL | III-124,155 |
| 701 | LOAD GUNS | III-124 |
| 705 | HOT PIT REFUEL | III-124,155 |
| 711 | AIRCRAFT BATTLE DAMAGE REPAIR | III-127,155 |
| 712 | AIRCRAFT BATTLE DAMAGE REPAIR | III-127 |
| 713 | AIRCRAFT BATTLE DAMAGE REPAIR | III-127 |
| 714 | AIRCRAFT BATTLE DAMAGE REPAIR | III-127 |
| 715 | AIRCRAFT BATTLE DAMAGE REPAIR | III-127 |
| 716 | AIRCRAFT BATTLE DAMAGE REPAIR | III-127 |
| 717 | AIRCRAFT BATTLE DAMAGE REPAIR | III-127 |
| 718 | AIRCRAFT BATTLE DAMAGE REPAIR | III-127,155 |
| 719 | AIRBASE DAMAGED AIRCRAFT REPAIR | III-127,155 |
| 720 | AIRBASE DAMAGED AIRCRAFT REPAIR | III-127 |
| 721 | AIRBASE DAMAGED AIRCRAFT REPAIR | III-127 |
| 722 | AIRBASE DAMAGED AIRCRAFT REPAIR | III-127 |
| 723 | AIRBASE DAMAGED AIRCRAFT REPAIR | III-127 |
| 724 | AIRBASE DAMAGED AIRCRAFT REPAIR | III-127 |
| 725 | AIRBASE DAMAGED AIRCRAFT REPAIR | III-127 |
| 726 | AIRBASE DAMAGED AIRCRAFT REPAIR | III-127,155 |
| 800 | 100 HOUR PHASED MAINTENANCE | III-125 |
| 806 | 36000 ROUNDS GUN BARREL INSPECTION | III-126 |
| 809 | 3000 ROUNDS GUN INSPECTION | III-126 |
| 810 | 6000 ROUNDS GUN INSPECTION | III-126 |
| 811 | 25000 ROUNDS GUN INSPECTION | III-126 |
| 812 | 200 HOUR OXYGEN PURGE | III-126 |

## VI.2 PERSONNEL CROSS-REFERENCE

| PERSONNEL TYPE | AFSC | DESCRIPTION | PAGES |
|---|---|---|---|
| 1 | 431X1C | FLIGHTLINE | III-5,49,51,52, 53,54,55,56,57, 58,60,61,62,63, 64,68,69,70,72, 73,78,84,85,86, 87,89,91,93,94, 95,124, IV-2,4, 5,6,7,8 |
| 2 | 427X5 | AIRFRAME REPAIR | III-7,49,51,52, 53,54,55,56,57, 58,60,67,68,69, 70,72,73,87,116, 119, IV-2,4,5,6, 7,8 |
| 3 | 423XO | ELECTRICAL SYSYEMS | III-9,57,58,62, 63,64,66,67,68, 70,71,73,76,79, 81,82,83,84,85, 86,90,93,94,96, 97, IV-2,4,5,6, 7,8 |
| 4 | 423X1 | ENVIRONMENTAL | III-11,58,77,78 ,79,95,96,97,124 125,126, IV-2,4, 5,6,7,8 |
| 5 | 423X2 | EGRESS SYSTEMS | III-13,56,58,59, 73,124, IV-2,4, 5,6,7,8, |
| 6 | 423X4 | PNEUDRAULICS | III-14,54,60,61, 62,63,64,65,67, 68,69,70,71,72, 87,88, IV-2,4, 5,6,7,8 |
| 7 | 426X2 | ENGINE | III-16,73,76,81, 87,96,125, IV-2,4,5,6,7,8 |
| 8 | 325XO | AUTOPILOT | III-18,86,103, 104, IV-2,4,5,6, 7,8 |
| 9 | 325X1 | AVIONICS/INSTR | III-20,64,72,73, 76,87,88,91,92, 95,99,101,102, 103,105,106, IV-2,4,5,6,7,8 |
| 10 | 322X2 | SENSORS | III-22,113, IV-2,4,5,6,7,8 |
| 11 | 431X1C | WHEEL/TIRE | III-24,59,132, IV-2,4,5,7,8 |
| 12 | 328XO | RADIO COMMUNICATION | III-25,106,107, 108, IV-2,4,5,6, 7,8 |
| 13 | 328X1 | RADAR NAVIGATION | III-27,109,110, 111, IV-2,4,5, 6,7,8 |

PERSONNEL CROSS-REFERENCE (CONTINUED)

| PERSONNEL TYPE | AFSC | DESCRIPTION | PAGES |
|---|---|---|---|
| 14 | 328X3 | ECM SYSTEMS | III-29,122,123, IV-2,4,5,6,7,8 |
| 15 | 328X4 | INERTIAL SYSTEMS | III-31,98, IV-2, 4,5,6,7,8 |
| 16 | 321X2Q | FIRE CONTROL | III-32,112,115, IV-2,4,5,6,7,8 |
| 17 | 462WO | WEAPON CONTROL | III-34,49,87,116, 118,119,121,126, IV-2,4,5,7,8 |
| 18 | 427XO | MACHINIST | III-36,49,51,52, 53,54,55,57,58, 60,65,66,70,72, 73,76,82,83,85, 88,89,91,92,99, 101,102,109,113, 116,119,121,122, IV-2,4,5,7,8 |
| 19 | 427X4 | WELDER | III-37,73, IV-2 4,5,7,8 |
| 20 | 404X1 | CAMERA | III-38,114,115, 144,145, IV-2,4, 5,7,8 |
| 21 | 431X1C | HEAVY REPAIR | III-39,49,51,52, 53,58,59,60,61, 66,67,68,69,70, 71,72,73, IV-2, 4,5,7,8 |
| 22 | 316X1L | MISSILE MAINT | III-48,128, IV-2,4,5,7,8 |
| 23 | 423X3 | FUEL SYSTEMS | III-43,53,89,90, 91,92,93,94,140, 141, IV-2,4,5,7,8 |
| 24 | 582X1 | PARACHUTE | III-45, IV-2,4, 5,7,9 |
| 25 | 531X5 | N D I | III-45,60,116, IV-2,4,5,7,9 |
| 26 | 531X4 | CORROSION CONTROL | III-45,93,121, IV-2,4,5,7,9 |
| 27 | 462GO | GUN SERVICE | III-47,147,148, 149,149,151, IV-2,4,5,7,9 |
| 28 | 462LO | LOADER | III-47,128,155, IV-2,4,5,7,9 |
| 29 | 322XO | AC CONFIGURATION | III-47, IV-2,4, 5,7,9 |
| 30 | 461XO | MUNITION MAINTENANCE | III-48,128, IV-2,4,5,7,9 |
| 31 | 431X1C | FLIGHTLINE | III-5, IV-2,5,6, 7,9 |
| 32 | 427X5 | AIRFRAME REPAIR | III-7, IV-2,5,6, 7,9 |
| 33 | 423XO | ELECTRICAL SYSTEMS | III-9, IV-2,5,6, 7,9 |
| 34 | 423X1 | ENVIRONMENTAL | III-11, IV-2,5, 6,7,9 |
| 35 | 423X2 | EGRESS SYSTEMS | III-13, IV-2,5, 6,7,9 |

PERSONNEL CROSS-REFERENCE (CONTINUED)

| PERSONNEL TYPE | AFSC | DESCRIPTION | PAGES |
|---|---|---|---|
| 36 | 423X4 | PNEUDRAULICS | III-14, IV-2,5, 6,7,9 |
| 37 | 426X2 | ENGINE | III-16, IV-2,5, 6,7,9 |
| 38 | 325XO | AUTOPILOT | III-18, IV-2,5, 6,7,9 |
| 39 | 325X1 | AVIONICS/INSTR | III-20, IV-2,5, 6,7,9 |
| 40 | 322X2 | SENSORS | III-22, IV-2,5, 6,7,9 |
| 41 | | ABDR ASSESSOR | III-7,127, IV-2, 4,5,7,9 |
| 42 | 328XO | RADIO COMMUNICATION | III-25, IV-2,5, 6,7,9 |
| 43 | 328X1 | RADAR NAVIGATION | III-27, IV-2,5, 6,7,9 |
| 44 | 328X3 | ECM SYSTEMS | III-29, IV-2,5, 6,7,9 |
| 45 | 328X4 | INERTIAL SYSTEMS | III-31, IV-2,5, 6,7,9 |
| 46 | 321X2Q | FIRE CONTROL | III-32, IV-2,5, 6,7,9 |
| 47 | 462WO | WEAPON CONTROL | III-34, IV-2,5, 7,9 |
| 50 | 322XO | AC CONFIGURATION | III-47,128, IV-2,4,5,7,9 |
| 51 | 431X1C | FLIGHTLINE | III-5, IV-2,5,6, 7,9 |
| 52 | 427X5 | AIRFRAME REPAIR | III-7, IV-2,5,6, 7,9 |
| 53 | 423XO | ELECTRICAL SYSTEMS | III-9, IV-2,5,6, 7,9 |
| 54 | 423X1 | ENVIRONMENTAL | III-11, IV-2,5, 6,7,9 |
| 55 | 423X2 | EGRESS SYSTEMS | III-13, IV-2,5, 6,7,9 |
| 56 | 423X4 | PNEUDRAULICS | III-14, IV-3,5, 6,7,9 |
| 57 | 426X2 | ENGINE | III-16, IV-3,5, 6,7,9 |

PERSONNEL CROSS-REFERENCE (CONTINUED)

| PERSONNEL TYPE | AFSC | DESCRIPTION | PAGES |
|---|---|---|---|
| 58 | 325X0 | AUTOPILOT | III-18, IV-3,5, 6,7,9 |
| 59 | 325X1 | AVIONICS/INSTR | III-20, IV-3,5, 6,8,9 |
| 60 | 322X2 | SENSORS | III-22, IV-3,5, 6,8,9 |
| 62 | 328X0 | RADIO COMMUNICATION | III-25, IV-3,5, 6,8,9 |
| 63 | 328X1 | RADAR NAVIGATION | III-27, IV-3,5, 6,8,9 |
| 64 | 328X3 | ECM SYSTEMS | III-29, IV-3,5, 6,8,9 |
| 65 | 328X4 | INERTIAL SYSTEMS | III-31, IV-3,5, 6,8,9 |
| 66 | 321X20 | FIRE CONTROL | III-32, IV-3,5, 6,8,9 |
| 67 | 462W0 | WEAPON CONTROL | III-34, IV-3,5, 6,8,9 |
| 70 | 462W0 | WEAPON CONTROL | III-34, IV-3,4, 5,6,8,9 |
| 75 | 423X2 | EGRESS SYSTEM | III-13, IV-3,4, 5,6,8,9 |
| 78 | 328X4 | INERTIAL SYSTEMS | III-31,141, IV-3,4,5,6,8,9 |
| 79 | 321X20 | FIRE CONTROL | III-32,144,145, 146,147, IV-3,4, 5,6,8,9 |
| 80 | 328X0 | RADIO COMMUNICATION | III-25,144, IV-3,4,5,6,8,9 |
| 81 | 328X1 | RADAR NAVIGATION | III-27,144, IV-3,4,5,6,8,9 |
| 82 | 427X5 | AIRFRAME REPAIR | III-7,129,130, 131,132,133,134, 135,136,138,139, 148,149,149,151, IV-3,4,5,6,8,9 |
| 83 | 423X0 | ELECTRICAL SYSTEMS | III-9,132,133, 134,135,136,137, 139,140, IV-3,4, 5,6,8,9 |
| 84 | 423X1 | ENVIRONMENTAL | III-11,137,138, 139,141,152, IV-3,5,6,8,9 |
| 85 | 328X3 | ECM SYSTEMS | III-29,152, IV-3,4,5,6,8,9 |
| 86 | 423X4 | PNEUDRAULICS | III-14,132,133, 135,140, IV-3,4, 5,6,8,9 |
| 87 | 426X2 | ENGINE | III-16,136,137, IV-3,4,5,6,8,9 |
| 88 | 325X0 | AUTOPILOT | III-18,142,143, IV-3,4,5,6,8,9 |
| 89 | 325X1 | AVIONICS/INSTR | III-20,136,141, 142,143,144, IV-3,4,5,6,8,9 |

PERSONNEL CROSS-REFERENCE (CONTINUED)

| PERSONNEL TYPE | AFSC | DESCRIPTION | PAGES |
|---|---|---|---|
| 90 | 322X2 | SENSORS | III-22,144, IV-3,4,5,6,8,9 |
| 197 | | CE/RRR | III-48, IV-3,6, 8,9 |
| 198 | | CE/RRR | III-48, IV-3,6, 8,9 |
| 199 | | CE/RRR | III-48, IV-3,6, 8,9 |

## VI.3 AGE CROSS-REFERENCE

| AGE TYPE | DESCRIPTION | PAGES |
|---|---|---|
| 1 | FUEL HYDRANT | III-5,6,124, IV-10 |
| 2 | OIL CART | III-39,40,42,86, IV-10 |
| 3 | HYDRAULIC MULE | III-14,42,60,88, IV-10 |
| 4 | HYDRAULIC CART | III-14,42,63,64, 70,72,87,88, IV-10 |
| 5 | B-1 MAINT STAND | III-39,40,42,53, 56, IV-10 |
| 6 | B-4 MAINT STAND | III-39,40,42,49, 51,58,125, IV-10 |
| 7 | C-1 MAINT STAND | III-39,40,42,59, 67,68,76,97,99, 101,102,103,105, 106, IV-10 |
| 8 | ENGINE CART | III-16,55,73, IV-10 |
| 9 | ENGINE STAND | III-16,73, IV-10 |
| 10 | ENGINE HOIST ASSY | III-16,73, IV-10 |
| 11 | AM32A-60 GENERATOR | III-39,40,42,64, 67,68,69,76,78, 81,83,84,85,86, 96,98,99,101,102, 103,105,106,108, 113,114,115,118, 122, IV-10 |
| 12 | MC-1A AIR COMPRESS | III-39,40,42,74, 80, IV-10 |
| 13 | MC-2A AIR COMPRESS | III-39,40,42,99, 101, IV-10 |
| 14 | AXLE JACK | III-39,40,42,60, 61,62,63, IV-10 |
| 15 | WING JACK | III-39,40,42,64, IV-10 |
| 16 | FUEL BOWERS | III-43, IV-10 |
| 17 | FUEL TANK LOADER | III-43,89, IV-10 |
| 18 | LOX CART | III-39,40,42,95, 124, IV-10 |
| 19 | GUN TRAILER | III-46, IV-10 |
| 20 | MHU-83 BOMBLIFT | III-46,128, IV-10 |
| 21 | GUN LOADER GFU-7 | III-42,46,116,124, IV-10 |
| 22 | NITROGEN BOTTLE | III-11, IV-10 |
| 80 | FUEL TRUCK | III-5,6,124,155, IV-10 |

## VI.4 PART NUMBER CROSS-REFERENCE

| PART NO | WUC CODE | PART DESCRIPTION | PAGES |
|---|---|---|---|
| 1 | 11AFO | WINDSHIELD ASSEMBLY | III-6,49,129, IV-11,16,21 |
| 2 | 11AFC | GLASS, SIDE WINDSHIELD, L.H./R.H. | III-35,49,129, IV-11,16,21 |
| 3 | 11ALO | BALLAST, VARIABLE | III-35,49,129, IV-11,16,21 |
| 4 | 11ARB | F2, OXYGEN CONVERTER | III-35,49,129, IV-11,16,21 |
| 5 | 11ARE | F5, SAFING AND GUN REMOVAL ACCESS | III-35,49,129, IV-11,16,21 |
| 6 | 11ARV | F14, ARMAMENT CIRCUIT BREAKER ACCESS | III-35,49,129, IV-11,16,21 |
| 7 | 11ASH | F44, AVIONICS ACCESS | III-35,49,129, IV-11,16,21 |
| 8 | 11ASK | F61, INVERTER, BATTERY RELAY BOX ACC | III-35,49,129, IV-11,16,21 |
| 9 | 11ASP | F65, BATTERY ACCESS | III-35,49,129, IV-11,16,21 |
| 10 | 11AST | F69, LADDER COMPARTMENT | III-35,49,129, IV-11,16,21 |
| 11 | 11ATE | F103, AVIONICS ACCESS | III-35,49,129, IV-11,16,21 |
| 12 | 11BOO | FUSELAGE, CENTER SECTION, STATION | III-8,51,129, IV-11,16,21 |
| 13 | 11BNA | F46, ELECTRICAL TROUGH ACCESS | III-8,51,129, IV-11,16,21 |
| 14 | 11COO | FUSELAGE, AFT SECTION, STATION | III-8,52,129, IV-11,16,21 |
| 15 | 11CEN | F45, ECS AND FUEL ACCESS | III-8,52,129, IV-11,16,21 |
| 16 | 11CEP | F47, AUXILIARY POWER UNIT ACCESS | III-8,52,129, IV-11,16,21 |
| 17 | 11DOO | WING ASSEMBLY | III-6,53,130, IV-11,16,21 |
| 18 | 11DGK | W21, LOWER PANEL ACCESS, RIGHT | III-8,53,130, IV-11,16,21 |
| 19 | 11DHK | W22, LOWER PANEL ACCESS, LEFT | III-8,53,130, IV-11,16,21 |
| 20 | 11DOB | W24, ACCESS PANEL OUTBOARD | III-8,53,130, IV-11,16,21 |
| 21 | 11EOO | EMPENNAGE | III-8,54,130, IV-11,16,21 |
| 22 | 11EEB | E3, COMPASS FLUX GATE ACCESS | III-8,54,130, IV-11,16,21 |
| 23 | 11EEF | E11, RUDDER TOP HINGE ACCESS, L.H. | III-8,54,130, IV-11,16,21 |
| 24 | 11EFF | E12, RUDDER TOP HINGE ACCESS, R.H. | III-8,54,130, IV-11,16,21 |
| 25 | 11FOO | ENGINE NACELLE, L.H./R.H. | III-8,55,131, IV-11,16,21 |
| 26 | 11FCC | N5, ENGINE LINES QAD ACCESS | III-8,55,131, IV-11,16,21 |
| 27 | 12AOO | COCKPIT | III-8,56,131, IV-11,16,21 |

PART CROSS-REFERENCE (CONTINUED)

| PART NO | WUC CODE | PART DESCRIPTION | PAGES |
|---|---|---|---|
| 28 | 12AAB | BOTTLE ASSEMBLY, INSULATED VACUUM | III-8,56,131, IV-11,16,21 |
| 29 | 12AAK | GLARESHIELD, MAIN INSTRUMENT PANEL | III-8,56,131, IV-11,16,21 |
| 30 | 12AAL | ANTI-REFLECTION SHIELD | III-8,56,131, IV-11,16,21 |
| 31 | 12BAO | LADDER, CREW BOARDING | III-6,57,131, IV-11,16,21 |
| 32 | 12GGA | ACTUATOR ASSEMBLY, CANOPY | III-41,58,132, IV-11,16,21 |
| 34 | 13BHA | TIRE, NOSE LANDING GEAR | III-6,59,132, IV-11,16,21 |
| 35 | 13AOO | MAIN LANDING GEAR | III-41,60,132, IV-11,16,21 |
| 36 | 13ADO | ACTUATOR, MLG RETRACT/DRAG | III-41,60,132, IV-11,16,21 |
| 37 | 13BDO | ACTUATOR, NLG RETRACT/DRAG | III-6,61,132, IV-11,16,21 |
| 38 | 13COO | NOSE WHEEL STEERING SYSTEM | III-10,62,133, IV-11,16,21 |
| 39 | 13DAO | BRAKE ASSEMBLY, R.H./L.H. | III-10,63,133, IV-11,16,21 |
| 40 | 13DFO | ANTI-SKID SYSTEM | III-10,63,133, IV-11,16,21 |
| 41 | 13DFA | CONTROL UNIT, ANTI-SKID | III-10,63,133, IV-11,16,21 |
| 42 | 13GAA | PANEL, LANDING GEAR CONTROL | III-10,64,133, IV-11,16,21 |
| 43 | 13GAC | VALVE, LANDING GEAR SELECTOR | III-10,64,133, IV-11,16,21 |
| 44 | 14ABO | EMERGENCY FLIGHT CONTROL PANEL | III-10,66,133, IV-11,16,21 |
| 45 | 14CCA | ACTUATOR, AILERON | III-41,67,133, IV-11,16,21 |
| 46 | 14CDA | ACTUATOR, SERVO TAB SHIFTER | III-41,67,133, IV-11,16,21 |
| 47 | 14CDB | ACTUATOR, TRIM STEPPER | III-41,67,133, IV-11,16,21 |
| 48 | 14EOO | PITCH CONTROL SYSTEM | III-41,68,134, IV-11,16,21 |
| 49 | 14EAO | ELEVATOR ASSEMBLY, L.H./R.H. | III-41,68,134, IV-11,16,21 |
| 50 | 14EAA | TAB TRIM | III-41,68,135, IV-11,16,21 |
| 51 | 14EBM | TORQUESHAFT, ELEVATOR ACTUATOR | III-41,68,135, IV-11,16,21 |
| 52 | 14ECA | ACTUATOR, ELEVATOR | III-41,68,135, IV-11,16,21 |
| 53 | 14EDA | ACTUATOR, PITCH TRIM | III-41,68,135, IV-11,16,21 |
| 54 | 14EDB | ACTUATOR, PITCH TRIM TAB | III-41,68,135, IV-12,16,21 |
| 55 | 14GAO | RUDDER ASSEMBLY, L.H./R.H. | III-41,69,135, IV-12,16,21 |
| 56 | 14GCA | ACTUATOR, RUDDER | III-41,69,135, IV-12,16,21 |

PART CROSS-REFERENCE (CONTINUED)

| PART NO | WUC CODE | PART DESCRIPTION | PAGES |
|---|---|---|---|
| 57 | 14KAO | FLAP ASSEMBLY, INBOARD | III-41,70,135, IV-12,17,22 |
| 58 | 14KBO | FLAP ASSEMBLY, OUTBOARD | III-41,70,135, IV-12,17,22 |
| 59 | 14KDA | ACTUATOR, FLAP | III-41,70,135, IV-12,17,22 |
| 60 | 14NAO | SLAT ASSEMBLY | III-41,72,135, IV-12,17,22 |
| 61 | 14NCA | ACTUATOR, SLAT | III-41,72,135, IV-12,17,22 |
| 62 | 14NCB | VALVE ASSEMBLY, CONTROL | III-41,72,135, IV-12,17,22 |
| 63 | 23000 | TURBO FAN POWER PLANT SYSTEM | III-17,73,136, IV-12,17,22 |
| 64 | 23ALF | AFT SHROUD DRAIN SEAL | III-17,73,136, IV-12,17,22 |
| 65 | 23AEO | SEAL ASSEMBLY, FAN AIR DUCT | III-17,73,136, IV-12,17,22 |
| 66 | 23AHO | ENGINE TO NACELLE PYLON ASSEMBLY | III-17,73,136, IV-12,17,22 |
| 67 | 23CBB | FAN FORWARD CASING | III-17,73,136, IV-12,17,22 |
| 68 | 23CPD | INTERTURBINE SEAL AND LINER | III-17,73,136, IV-12,17,22 |
| 69 | 23CSD | C-SUMP REAR COVER | III-17,73,136, IV-12,17,22 |
| 70 | 23DCA | MAIN FUEL CONTROL | III-17,73,136, IV-12,17,22 |
| 71 | 23DCJ | MAIN FUEL FILTER | III-17,73,136, IV-12,17,22 |
| 72 | 23DJL | AMPLIFIER CONTROL, T5 | III-17,73,136, IV-12,17,22 |
| 73 | 23DKB | OIL FILLER TUBE | III-17,73,136, IV-12,17,22 |
| 74 | 23DLF | LUBE FILTER ELEMENT | III-17,73,136, IV-12,17,22 |
| 75 | 23GCA | GENERATOR, TACH CORE SPEED (NG) | III-17,73,136, IV-12,17,22 |
| 76 | 23GCB | INDICATOR, TACH, CORE SPEED (NG) | III-17,73,136, IV-12,17,22 |
| 77 | 23GCC | INDICATOR, TACH, FAN SPEED (NF) | III-17,73,136, IV-12,17,22 |
| 78 | 23GEA | INDICATOR, INTERTURBINE TEMPERATURE | III-17,73,136, IV-12,17,22 |
| 79 | 23GGB | INDICATOR, FUEL FLOW, LEFT ENGINE | III-17,73,136, IV-12,17,22 |
| 80 | 23GGC | INDICATOR, FUEL FLOW, RIGHT ENGINE | III-17,73,136, IV-12,17,22 |
| 81 | 23KAO | QUADRANT ASSEMBLY, ENGINE CONTROL | III-17,73,136, IV-12,17,22 |
| 82 | 23CAC | FAN BLADE | III-17,73,136, IV-12,17,22 |
| 83 | 23JAO | STARTER, AIR TURBINE | III-17,73,136, IV-12,17,22 |
| 84 | 23JBA | VALVE,ENGINE START,SOLENOID SHUT-OFF | III-17,73,136, IV-12,17,22 |

PART CROSS-REFERENCE (CONTINUED)

| PART NO | WUC CODE | PART DESCRIPTION | PAGES |
|---|---|---|---|
| 85 | 24AFA | FUEL CONTROL | III-17,76,137. IV-12,17,22 |
| 86 | 24AHA | CONTROL, ELECTRONIC | III-17,76,137. IV-12,17,22 |
| 87 | 24AHE | THERMOCOUPLE, EGT | III-17,76,137. IV-12,17,22 |
| 88 | 41AAO | PANEL, ENVIRONMENTAL CONTROL | III-12,77,137. IV-12,17,22 |
| 89 | 41ABA | VALVE, TEMPERATURE CONTROL | III-12,77,137. IV-12,17,22 |
| 90 | 41ABF | CONTROLLER, CABIN TEMPERATURE SYSTEM | III-12,77,137. IV-12,17,22 |
| 91 | 41BOO | AIR CONDITIONING SYSTEM | III-12,78,138. IV-12,17,22 |
| 92 | 41BAA | AIR CYCLE MACHINE | III-12,78,138. IV-12,17,22 |
| 93 | 41BAB | HOUSING AND ASPIRATOR ASSEMBLY | III-12,78,139. IV-12,17,22 |
| 94 | 41BBD | DUCTS, LEFT SIDE, SERVICE AIR | III-12,78,139. IV-12,17,22 |
| 95 | 41BBM | OUTLET ASSEMBLY, CABIN AIR | III-12,78,139. IV-12,17,22 |
| 96 | 41BBN | VALVE, MANUAL CABIN AIR DIRECTOR | III-12,78,139. IV-12,17,22 |
| 97 | 41BCB | VALVE, PRESSURE REGULATING/SHUT-OFF | III-12,78,139. IV-12,17,22 |
| 98 | 41EAA | CONTROL UNIT, ANTI-ICE SYSTEM | III-10,79,139. IV-12,17,22 |
| 99 | 41GOO | WASH SYSTEMS | III-12,80,139. IV-12,17,22 |
| 100 | 41GAE | PRESSURE REGULATOR, WASH SYSTEMS | III-12,80,139. IV-12,17,22 |
| 101 | 42AOO | AC POWER GENERATING SYSTEM | III-17,81,139. IV-12,17,22 |
| 102 | 42AAO | INTEGRATED DRIVE GENERATOR, L.H./R.H. | III-17,81,139. IV-12,17,22 |
| 103 | 42AEO | CONTROL UNIT, GENERATOR L.H./R.H | III-17,81,139. IV-12,17,22 |
| 104 | 42BAO | INVERTER, STANDBY | III-10,82,139. IV-12,17,22 |
| 105 | 42FOO | AC/DC DISTRIBUTION SYSTEM | III-10,83,139. IV-12,17,22 |
| 106 | 42FAB | BOX ASSEMBLY, MISC RELAYS | III-10,83,139. IV-12,17,23 |
| 107 | 42FAC | BOX ASSEMBLY, COCKPIT AC POWER RELAYS | III-10,83,139. IV-12,17,23 |
| 108 | 42FAE | BOX ASSEMBLY, FUEL/ENGINE RELAYS | III-10,83,139. IV-12,17,23 |
| 109 | 42FAG | BOX ASSEMBLY, LANDING GEAR RELAYS | III-10,83,140. IV-12,17,23 |
| 110 | 44AAO | CNTL PANEL, EXTERIOR & INTER LIGHT | III-10,84,140. IV-13,17,23 |
| 111 | 44BBO | POWER SUPPLY, STROBE LIGHTS | III-10,85,140. IV-13,17,23 |
| 112 | 44BEB | LIGHT, LOWER FUSELAGE | III-10,85,140. IV-13,18,23 |

PART CROSS-REFERENCE (CONTINUED)

| PART NO | WUC CODE | PART DESCRIPTION | PAGES |
|---|---|---|---|
| 113 | 44BEC | LIGHT,FORMAT/TAIL FLOOD, VERT STAB | III-10,85,140, IV-13,18,23 |
| 114 | 44COO | INTERIOR LIGHTING SYSTEM | III-10,86,140, IV-13,18,23 |
| 115 | 44CDO | PANEL ASSEMBLY, AUX LIGHTING | III-10,86,140, IV-13,18,23 |
| 116 | 44CFO | PANEL, MASTER CAUTION ANNUNCIATOR | III-10,86,140, IV-13,18,23 |
| 117 | 44CGA | UTILITY LIGHT | III-10,86,140, IV-13,18,23 |
| 118 | 45AOO | LEFT HYDRAULIC POWER SYSTEM | III-35,87,140, IV-13,18,23 |
| 119 | 45AAA | PUMP, HYDRAULIC ENGINE DRIVEN, LEFT | III-35,87,140, IV-13,18,23 |
| 120 | 45ACL | VALVE, SYSTEM SHUT OFF | III-35,87,140, IV-13,18,23 |
| 121 | 45ACT | ACCUMULATOR, BOOT STRAP | III-35,87,140, IV-13,18,23 |
| 122 | 45ADO | LEFT HYDRAULIC RESERVOIR ASSEMBLY | III-35,87,140, IV-13,18,23 |
| 123 | 45AFD | HOSE, PRESS,ENGINE/FUSELAGE PYLONS | III-35,87,140, IV-13,18,23 |
| 124 | 45BAA | PUMP, HYDRAUL ENGINE DRIVEN, RIGHT | III-15,88,140, IV-13,18,23 |
| 125 | 45BDO | RIGHT HYDRAULIC RESERVOIR ASSEMBLY | III-15,88,140, IV-13,18,23 |
| 126 | 45DAO | PUMP, HYDRAULIC, 10 GPM | III-15,88,140, IV-13,18,23 |
| 127 | 46AEO | FUEL TANK, EXTERNAL, 600 GALLON | III-44,89,140, IV-13,18,23 |
| 128 | 46BDA | RELAY, ELECTRICAL | III-44,90,141, IV-13,18,23 |
| 129 | 46BDK | AMPLIFIER, SIGNAL | III-44,90,141, IV-13,18,23 |
| 130 | 46DAA | INDICATOR, FUEL QUANTITY & TOTAL | III-21,92,141, IV-13,18,23 |
| 131 | 46DAD | INTERMEDIATE DEVICE | III-21,92,141, IV-13,18,23 |
| 132 | 46EAO | PUMP ASSY,LEFT/RIGHT MAIN TANK BOOST | III-44,93,141, IV-13,18,23 |
| 133 | 46FBF | VALVE, RIGHT WING PILOT SHUTOFF | III-44,94,141, IV-13,18,23 |
| 134 | 47A77 | CONNECTORS, AIRCRAFT ELECTRICAL | III-12,95,141, IV-13,18,23 |
| 135 | 47AAO | CONVERTER ASSEMBLY, LOX, MB-5/A | III-12,95,141, IV-13,18,23 |
| 136 | 47AAD | CAP, BUILD-UP AND VENT | III-12,95,141, IV-13,18,23 |
| 137 | 47ABA | REGULATOR, DILUTER DEMAND, CRU-73A | III-12,95,141, IV-13,18,23 |
| 138 | 47ACA | INDICATOR, LOX QUANTITY, GMU-37A | III-12,95,141, IV-13,18,23 |
| 139 | 49AAB | SENSOR, 650 DEGREES F | III-96, IV-13,18, 23 |
| 140 | 49BOO | FIRE EXTINGUISHING SYSTEM | III-10,97,141, IV-13,18,23 |

PART CROSS-REFERENCE (CONTINUED)

| PART NO | WUC CODE | PART DESCRIPTION | PAGES |
|---|---|---|---|
| 141 | 41BAD | CANISTERS, EXTINGUISHING SYSTEM | III-10,97,141, IV-13,18,23 |
| 142 | 51INS | INERTIAL SYSTEMS | III-31,98,141, IV-13,18,23 |
| 143 | 51COO | FLIGHT INSTRUMENTS | III-21,99,141, IV-13,18,23 |
| 144 | 51CAA | ACCELEROMETER, NORMAL | III-21,99,141, IV-13,18,23 |
| 145 | 51CAB | INDICATOR, STANDBY ATTITUDE | III-21,99,141, IV-13,18,23 |
| 146 | 51CAC | INDICATOR, ATTITUDE DIRECTOR | III-21,99,141, IV-13,18,23 |
| 147 | 51CDA | PROBE, PITOT STATIC | III-99, IV-13,18, 23 |
| 148 | 51CDE | DRAINS, PITOT STATIC LINES | III-99, IV-13,18, 23 |
| 149 | 51CDK | COMPUTER TRANSDUCER-ALTITUDE | III-21,99,141, IV-13,18,23 |
| 150 | 51CDM | INDICATOR, AIRSPEED | III-6,21,59,99, 142, IV-13,18,23 |
| 151 | 51CDP | ALTIMETER, AAU-19/A | III-6,59,99,142, IV-13,18,23 |
| 152 | 51CDR | ALTIMETER, AAU-34/A | III-21,99,142, IV-13,18,23 |
| 153 | 51CDS | INDICATOR, VERICAL VELOCITY | III-21,99,142, IV-13,18,23 |
| 154 | 51CGB | INDICATOR, ANGLE OF ATTACK | III-21,99,142, IV-13,18,23 |
| 155 | 51EOO | NAVIGATION INSTRUMENTS | III-21,101,142, IV-13,18,23 |
| 156 | 51EAA | CLOCK, AICRAFT, ABU-11/A | III-21,101,142, IV-13,18,23 |
| 157 | 51FOO | CONTROL SET, GYROSCOPE, ATTITUDE | III-21,102,142, IV-13,18,23 |
| 158 | 51FAO | GYROSCOPE, DISPLACEMENT | III-21,102,142, IV-13,18,23 |
| 159 | 51FCO | AMPLIFIER, ELECTRONIC CONTROL | III-21,102,142, IV-13,18,23 |
| 160 | 51FEO | CONTROLLER, COMPASS SYSTEM | III-21,102,142, IV-13,18,23 |
| 161 | 51FFO | DETECTOR, MAGNETIC AZIMUTH | III-21,102,142, IV-13,18,23 |
| 162 | 51GAO | INDICATOR, HORIZONTAL SITUATION | III-21,103,143, IV-13,18,24 |
| 163 | 52AAO | COMPUTER | III-19,103,143, IV-13,18,24 |
| 164 | 52ACO | CONTROL PANEL, AUX FLIGHT | III-19,103,143, IV-13,18,24 |
| 165 | 52AFB | TRANSDUCER, SPEED BRAKE POSIT LVDT | III-103, IV-13, 18,24 |
| 166 | 52BBO | COMPUTER, BETA DOT | III-19,104,144, IV-13,18,24 |
| 167 | 55AAO | RECORDER, SIGNAL DATA | III-21,105,144, IV-14,18,24 |
| 168 | 55AAB | MAGAZINE, RECORDER | III-21,105,144, IV-14,18,24 |

PART CROSS-REFERENCE (CONTINUED)

| PART NO | WUC CODE | PART DESCRIPTION | PAGES |
|---|---|---|---|
| 169 | 55ABO | CONVERTER/MULTIPLEXER | III-21,105,144, IV-14,19,24 |
| 170 | 55ACO | SENSING DEVICES | III-21,105,144, IV-14,19,24 |
| 171 | 55ACC | ACCELEROMETER, NORMAL | III-21,105,144, IV-14,19,24 |
| 172 | 55ACD | ACCELEROMETER, TRANSVERSE | III-21,105,144, IV-14,19,24 |
| 173 | 55CAO | ENGINE TIME/TEMPERATURE RECORDER | III-21,106,144, IV-14,19,24 |
| 174 | 62AOO | VHF/FM COMMUNICATION | III-26,106,144, IV-14,19,24 |
| 175 | 62AAO | RADIO SET, RECEIVER/TRANSMITTER | III-26,106,144, IV-14,19,24 |
| 176 | 62ACO | CONTROL, C-921/FM-622A | III-26,106,144, IV-14,19,24 |
| 177 | 62ADO | ANTENNA ASSEMBLY, BLADE | III-26,106,144, IV-14,19,24 |
| 178 | 62CAO | RADIO SET, RECEIVER/TRANSMITTER | III-26,107,144, IV-14,19,24 |
| 179 | 62CCO | CONTROL UNIT, VHF/AM-807A | III-26,107,144, IV-14,19,24 |
| 180 | 62DAO | RADIO SET, RECEIVER/TRANSMITTER | III-26,107,144, IV-14,19,24 |
| 181 | 62DBO | CONTROL UNIT, C-10604 | III-26,107,144, IV-14,19,24 |
| 182 | 63AOO | UHF COMMUNICATIONS SYSTEM | III-26,108,144, IV-14,19,24 |
| 183 | 63AAO | RADIO SET, RECEIVER/TRANSMITTER | III-26,108,144, IV-14,19,24 |
| 184 | 63ADO | DIRECTION FINDER, UHF/ADF/ARD | III-26,108,144, IV-14,19,24 |
| 185 | 63AFO | REMOTE CHANNEL FREQ INDICATOR | III-26,108,144, IV-14,19,24 |
| 186 | 64AAO | CONTROL, INTERCOMM SET | III-26,108,144, IV-14,19,24 |
| 187 | 64ACO | RELAY BOX, AVIONICS | III-26,108,144, IV-14,19,24 |
| 188 | 65AOO | TRANSPONDER SET | III-28,109,144, IV-14,19,24 |
| 189 | 65AAO | RECEIVER/TRANSMITTER | III-28,109,144, IV-14,19,24 |
| 190 | 65ABO | CONTROL UNIT | III-28,109,144, IV-14,19,24 |
| 191 | 71CAO | PANEL, NAV MODE SELECT | III-28,110,144, IV-14,19,24 |
| 192 | 71CCO | RELAY BOX, NAV MODE, 51 RELAYS | III-28,110,144, IV-14,19,24 |
| 193 | 71DBO | RADIO RECEIVER | III-28,110,144, IV-14,19,24 |
| 194 | 71ZAO | RECEIVER/TRANSMITTER | III-28,111,144, IV-14,19,24 |
| 195 | 71ZBO | ADAPTER, MX-9577/A | III-28,111,144, IV-14,19,24 |
| 196 | 71ZDO | CONTROL PANEL ARN-118 | III-28,111,144, IV-14,19,24 |

PART CROSS-REFERENCE (CONTINUED)

| PART NO | WUC CODE | PART DESCRIPTION | PAGES |
|---|---|---|---|
| 197 | 72AAO | ENCODER/TRANSPONDER | III-26,111,144, IV-14,19,24 |
| 198 | 74AOO | HEAD-UP DISPLAY | III-33,112,144, IV-14,19,24 |
| 199 | 74AAO | PROJECTION UNIT, HEAD-UP DISPLAY | III-33,112,144, IV-14,19,24 |
| 200 | 74ABO | SYMBOL GENERATOR | III-33,112,144, IV-14,19,24 |
| 201 | 74ACO | CONTROL UNIT | III-33,112,144, IV-14,19,24 |
| 202 | 74COO | TARGET ID SET LASER, PAVE PENNY | III-23,113,144, IV-14,19,24 |
| 203 | 74CAO | DETECTOR, LASER ILLUMINATED TARGET | III-23,113,144, IV-14,19,24 |
| 204 | 74CBO | ADAPTER, CONTROL DETECTOR | III-23,113,144, IV-14,19,24 |
| 205 | 74DOO | GUN CAMERA SYSTEM | III-35,114,144, IV-14,19,24 |
| 206 | 74DAD | ELECTRONICS MODULE | III-38,114,145, IV-14,19,24 |
| 207 | 74DCO | MAGAZINE 100 FT LB-41A | III-38,114,145, IV-14,19,24 |
| 208 | 74EOO | TV MONITOR INSTALLATION (CARDION) | III-33,115,145, IV-14,19,24 |
| 209 | 74EAO | DISPLAY UNIT, FIRE CONTROL | III-33,115,146, IV-14,19,24 |
| 210 | 74EBO | CONTROL UNIT, FIRE CONTROL | III-33,115,146, IV-14,19,24 |
| 211 | 74FAO | DISPLAY UNIT, TV MONITOR | III-33,116,147, IV-14,19,24 |
| 212 | 74FBO | CONTROL UNIT, TV MONITOR | III-33,116,147, IV-14,19,24 |
| 213 | 75AAO | GUN, 30 MM | III-35,116,147, IV-14,19,24 |
| 214 | 75ABO | DRUM, AMMUNITION | III-35,116,147, IV-14,19,24 |
| 215 | 75ADO | GUN, 30 MM, OTHER | III-35,116,147, IV-14,19,24 |
| 216 | 75AFO | ACCESS UNIT, WEAPON DELIVERY | III-35,116,147, IV-14,19,24 |
| 217 | 75ALO | BELT, CONVEYOR | III-35,116,147, IV-14,19,24 |
| 218 | 75AMO | WEAPON DELIVERY, OTHER | III-35,116,147, IV-14,19,25 |
| 219 | 75ANO | WEAPON DELIVERY, OTHER | III-35,116,147, IV-14,19,25 |
| 220 | 75ASO | ELECTRONIC CONTROL UNIT | III-35,116,147, IV-14,19,25 |
| 221 | 75AUO | DRIVE SYSTEM | III-35,116,147, IV-14,19,25 |
| 222 | 75AUB | DRIVE, HYDRAULIC MOTOR | III-35,116, IV-14,19,25 |
| 223 | 75AWO | TRANSFER UNIT | III-35,116,147, IV-14,19,25 |
| 224 | 75BOO | ARMAMENT CONTROL SYSTEM | III-35,118,147, IV-15,19,25 |

PART CROSS-REFERENCE (CONTINUED)

| PART NO | WUC CODE | PART DESCRIPTION | PAGES |
|---|---|---|---|
| 225 | 75BAO | PANEL, ARMAMENT CONTROL | III-35,118,147, IV-15,19,25 |
| 226 | 75BAS | INDICATOR, STORES LOADING DISPLAY | III-35,118, IV-15,20,25 |
| 227 | 75BCO | INTERSTATION CONTROL UNIT | III-35,118,147, IV-15,20,25 |
| 228 | 75BDO | STATION CONTROL UNIT, TYPE A | III-35,118,147, IV-15,20,25 |
| 229 | 75BEO | WEAPON DELIVERY, OTHER | III-35,118,148, IV-15,20,25 |
| 230 | 75COO | EXTERNAL ARMAMENT SYSTEM | III-35,119,148, IV-15,20,25 |
| 231 | 75CAO | PYLON, WING WEAPON STATION 1 & 11 | III-35,119,149, IV-15,20,25 |
| 232 | 75CCO | PYLON, WING WEAPON STATION 2 & 10 | III-35,119,149, IV-15,20,25 |
| 233 | 75CCF | SEAL ASSEMBLY, PYLON | III-35,119,149, IV-15,20,25 |
| 234 | 75CDO | PYLON, WING WEAPON STATION 4 & 8 | III-35,119,149, IV-15,20,25 |
| 235 | 75DOO | CABLE ADAPTERS | III-35,120,151, IV-15,20,25 |
| 236 | 75DCO | TER-9 ADAPTER | III-35,120,151, IV-15,20,25 |
| 237 | 75DDO | LAU-88 ADAPTER | III-35,120,151, IV-15,20,25 |
| 238 | 75FAO | BOMB RACK, MAU-40/A | III-35,121,151, IV-15,20,25 |
| 239 | 75FBO | BOMB RACK, MAU-50/A | III-35,121,151, IV-15,20,25 |
| 240 | 75FDO | TRIPLE-EJECTOR RACK, TER-9A | III-35,121,151, IV-15,20,25 |
| 241 | 76AAO | SIGNAL PROCESSOR | III-30,122,152, IV-15,20,25 |
| 242 | 76ABO | AMPLIFIER, DETECTORS | III-30,122,152, IV-15,20,25 |
| 243 | 76AFO | INDICATOR, AZIMUTH | III-30,122,152, IV-15,20,25 |
| 244 | 76ARO | COMPASS SAIL AMPLIFIER DETECTOR | III-30,122,152, IV-15,20,25 |
| 245 | 76ASO | INDICATOR, CONTROL | III-30,122,152, IV-15,20,25 |
| 246 | 76POD | ECM POD | III-30,123,152, IV-15,20,25 |
| 247 | 76EEO | RECEIVER, FREQ SELECTIVE | III-123, IV-15, 20,25 |
| 248 | 91BEA | CYLINDER ASSEMBLY | III-12,124,152, IV-15,20,25 |
| 249 | 91BEC | HOSE, EMERGENCY OXYGEN | III-124, IV-15, 20,25 |
| 250 | 13AHAL | TIRE, MAIN LANDING GEAR, L.H. | III-6,59,152, IV-15,20,25 |
| 251 | 13AHAR | TIRE, MAIN LANDING GEAR, R.H. | III-6,59,152, IV-15,20,25 |

END

DTIC

7-86