AD-A165 903 THE SYNTHESIS OF STABLE GRASPS IN THE PLANE(U) 1/1
MASSACHUSETTS INST OF TECH CAMBRIDGE ARTIFICIAL
INTELLIGENCE LAB V NGUYEN OCT 85 AI-M-862
UNCLASSIFIED N00014-80-C-0505 F/G 9/2 NL

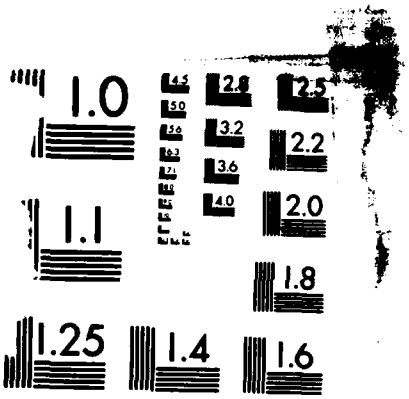

MICROCOPY RESOLUTION TEST CHART
NATIONAL BUREAU OF STANDARDS-1963-A

UNCLASSIFIED

SECURITY CLASSIFICATION OF THIS PAGE (When Data Entered)

AD-A165 903

REPORT DOCUMENTATION PAGE

READ INSTRUCTIONS BEFORE COMPLETING FORM

REPORT NUMBER: AIM 862	2. GOVT ACCESSION NO.
3. RECIPIENT'S CATALOG NUMBER	
TITLE (and Subtitle): The Synthesis of Stable Grasps in the Plane	5. TYPE OF REPORT & PERIOD COVERED: AI Memo
6. PERFORMING ORG. REPORT NUMBER	
AUTHOR(s): Van-Duc Nguyen	8. CONTRACT OR GRANT NUMBER(s): N00014-80-C-0505, N00014-82-K-0334
PERFORMING ORGANIZATION NAME AND ADDRESS: rtificial Inteligence Laboratory, 45 Technology Square, ambridge, MA 02139	10. PROGRAM ELEMENT, PROJECT, TASK AREA & WORK UNIT NUMBERS
CONTROLLING OFFICE NAME AND ADDRESS: Advanced Research Projects Agency, 1400 Wilson Blvd., Arlington, VA 22209	12. REPORT DATE: October 1985
	13. NUMBER OF PAGES: 22
14. MONITORING AGENCY NAME & ADDRESS (if different from Controlling Office): Office of Naval Research, Information Systems, Arlington, VA 22217	15. SECURITY CLASS. (of this report): UNCLASSIFIED
	15a. DECLASSIFICATION/DOWNGRADING SCHEDULE

16. DISTRIBUTION STATEMENT (of this Report)

Distribution is unlimited.

17. DISTRIBUTION STATEMENT (of the abstract entered in Block 20, if different from Report)

DTIC ELECTE MAR 2 8 1986 S D E

18. SUPPLEMENTARY NOTES

None

19. KEY WORDS (Continue on reverse side if necessary and identify by block number)

grasp planning
stable grasp
grasp synthesis
active compliance

20. ABSTRACT (Continue on reverse side if necessary and identify by block number)

This paper addresses the problem of synthesizing stable grasps on arbitrary planar polygons. Each finger is a virtual spring whose stiffness and compression can be programmed. The contacts between the finger tips and the object are point contacts without friction.
We prove that all force-closure grasps can be made stable, and it costs O(n) time to synthesize a set of n virtual springs such that a given force-closure

(over)

DTIC FILE COPY

DD FORM 1 JAN 73 1473 EDITION OF 1 NOV 65 IS OBSOLETE S/N 0102-014-6601

UNCLASSIFIED

SECURITY CLASSIFICATION OF THIS PAGE (When Data Entered)

(block 20 continued)

is stable. We can also choose the compliance center and the stiffness matrix of the grasp, and so choose the compliant behavior of the grasped object about its equilibrium. the planning and execution of grasps and assembly operations become easier and less sensitive to errors.

MASSACHUSETTS INSTITUTE OF TECHNOLOGY
ARTIFICIAL INTELLIGENCE LABORATORY

A. I. Memo 862 **October, 1985**

The Synthesis of Stable Grasps in the Plane

Van-Duc Nguyen

Abstract: This paper addresses the problem of synthesizing stable grasps on arbitrary planar polygons. Each finger is a virtual spring whose stiffness and compression can be programmed. The contacts between the finger tips and the object are point contacts without friction.

~~We prove~~ It is proven that all force-closure grasps can be made stable, and it costs $O(n)$ time to synthesize a set of n virtual springs such that a given force-closure grasp is stable. We can also choose the compliance center and the stiffness matrix of the grasp, and so choose the compliant behavior of the grasped object about its equilibrium. The planning and execution of grasps and assembly operations become easier and less sensitive to errors.

Keywords: Planning or synthesis of stable grasps, active compliance.

Acknowledgments: This report describes research done at the General Motors Research Laboratories and at the Artificial Intelligence Laboratory of the Massachusetts Institute of Technology. Support for the MIT Laboratory's Artificial Intelligence research is provided in part by a grant from the System Development Foundation, and in part by the Advanced Research Projects Agency under Office of Naval Research contracts N00014-80-C-0505 and N00014-82-K-0334.

© Massachusetts Institute of Technology 1985

Contents

1 Introduction **1**

1.1 Models For Grasp, Fingers, and Contacts 1

1.2 Main Results 1

1.3 A Grasp Planner 3

1.4 Other Related Works 3

2 Planar Grasps With Virtual Springs **4**

2.1 Potential Function of a Grasp 4

2.2 Grasp Equilibrium 5

2.3 Grasp Stability 6

2.4 Compliance About Stable Equilibrium 9

3 Construction of Stable Grasps **11**

3.1 Center of Compliance 12

3.2 Outside-In / Inside-Out Grasps 14

3.3 Making a Force-Closure Grasp Stable 16

3.4 Controlling a Compliant Grasp 18

4 Conclusion and Extensions **20**

Accession For

NTIS GRA&I ☒
DTIC TAB ☐
Unannounced ☐
Justification

By
Distribution/

Availability Codes

Dist	Avail and/or Special
A-1	

1 Introduction

1.1 Models For Grasp, Fingers, and Contacts.

This paper addresses the problem of synthesizing stable grasps in the plane. The grasped object can be any arbitrary polygon. The grasp is modeled as a set of grasp points on the edges of the object. Input to the system will be this set of grasp points and the corresponding set of contacting edges. Ouput will be a set of spring constants and compressions at the fingers, such that the grasp is stable. The behavior of the grasped object about its equilibrium is described by a diagonal stiffness matrix.

Each finger is a virtual spring with programmable stiffness and compression. The stiffness at a finger tip comes from the stiffnesses at its joint. The stiffness at a finger joint in turn comes from the fixed stiffness of the tendon and motor, and from the variable stiffness of the control loop. We assume that each joint has stiffness control as its high level control loop.

The contacts between the finger tips and the object are point contacts without friction. So, each finger tip can only exert a force normal to its edge of contact. Each finger is therefore modeled as a linear spring normal to the edge of contact.

We assume that the weight of the object is small compared to the contact forces, and so is neglected. A more realistic scenario is a grasp on a polygonal cross section of a cylinder. The weight is perpendicular to the grasping plane, and is balanced by the frictional forces at the rolling fingers. The fingers roll without friction in the grasping plane. Figure 1.

1.2 Main Results

- We prove that all force-closure grasps can be made stable (Corollary 5). The algorithm for constructing a stable grasp is both simple and efficient (Algorithm 1). It costs $O(n)$ time to synthesize a set of n virtual springs such that a given force-closure grasp is stable (Complexity 1).

- We can choose the compliance center and the stiffness matrix of the grasp, or in other words, choose the behavior of the grasped object about its stable equilibrium. The object behaves as though it is attached to two linear springs and one angular spring at its compliance center (Figure 4). The grasp is robust to disturbances. If the object is accidentally displaced, there will be restoring wrenches that will pull it back to its stable equilibrium. All this is done automatically, fast, and without any extra effort from planning or execution.

- The planning and execution of grasps are greatly simplified, and a lot less sensitive to errors, because of the existence of stable configurations. Knowing that a stable grasp exists on a set of edges, we can just grasp near the desired

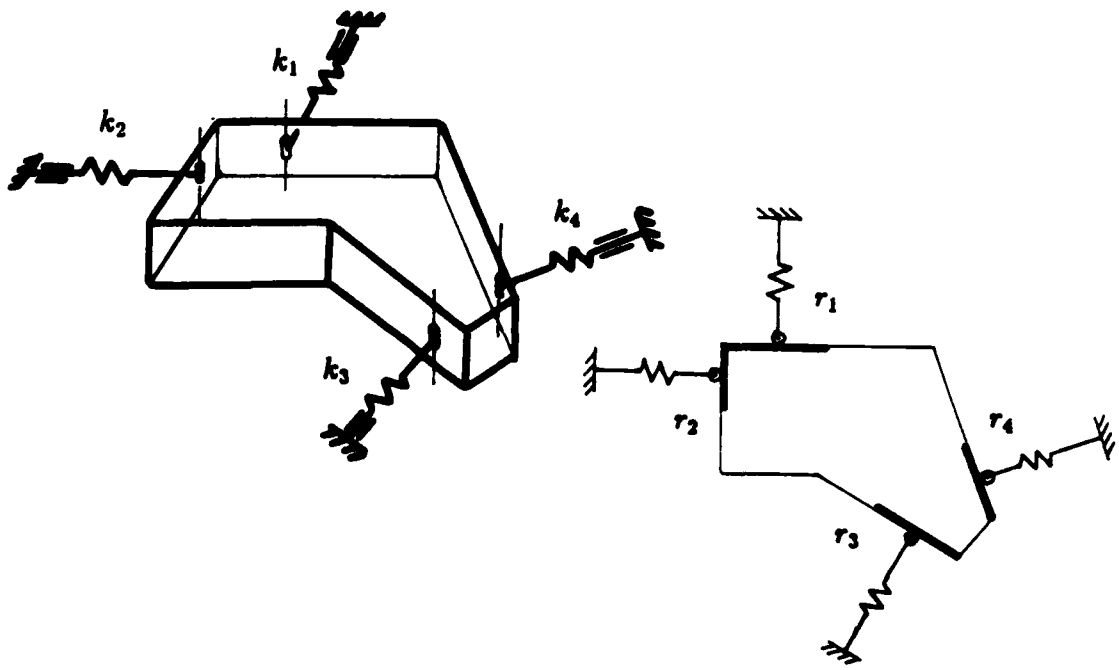

Figure 1: An example of planar grasps.

grasp points and let the fingers adjust themselves on these edges until they end up on the planned grasp points. Any fast oscillation will be damped by the mechanical damping of the fingers and some nominal damping in the joint control loops. We will only see the fingers slide and comply to the edges until the desired grasp is achieved. This execution is fast because the fingers can be servoed in parallel, independently from each other.

- The planning and execution of assembly operations is also greatly simplified and a lot less sensitive to errors, because we can choose the center of compliance and the stiffness matrix. Instead of planning for explicit force and trajectory, we plan for a compliant behavior of the parts respective to each other. For example, to do peg and hole insertion, we need to stably grasp the peg, put the compliance center at the mouth of the hole, and push the peg into the hole. [1] A dextrous hand with active compliance is therefore much more flexible than the RCC [2] gripper, (Whitney 1982).

[1] This paper shows how to control the position of the compliance center in the horizontal plane perpendicular to the axis of the hole. To control the position of the compliance center in the vertical plane containing the axis of the hole, we need point contacts with friction, see (Nguyen 1986).

[2] The Remote Center of Compliance wrist is a device with passive compliance which puts the center of compliance at the tip of the peg. The springs and the center of compliance are fixed relative to the peg.

1.3 A Grasp Planner

Figure 1 shows a planar grasp that is both force-closure and stable. Force-closure is defined as follows:

Definition 1 *A grasp G is force-closure if and only if we can exert, through the set of grasp points, arbitrary force and moment on the object. Equivalently, any motion of the object is resisted by a contact force, that is the object cannot break contact with the finger tips without some non-zero external work.*

Mathematically, let $\mathbf{w_i} = (f_{ix}, f_{iy}, m_{iz})'$ be the planar wrench that can be exerted through point contact P_i. Grasp G is force-closure if and only if the set of n wrenches $\{\mathbf{w_1}, \ldots, \mathbf{w_n}\}$ has rank equal to three and there exists a set of non-negative coefficients $\{\alpha_1, \ldots, \alpha_n\}$ such that:

$$\sum_{i=1}^{n} \alpha_i \mathbf{w_i} = \mathbf{0}$$

A Grasp Planner can generate a stable grasp G on a set of edges $\{e_1, \ldots, e_n\}$ as follows:

- Synthesize a set of grasp points $\{P_1, \ldots, P_n\}$ for which the grasp G at these grasp points is force-closure.

  Better yet we find the optimal set of grasps with independent regions of contact $\{r_1, \ldots, r_n\}$ for the given n edges. The regions are independent from each other, in the sense that as long as we pick grasp point P_i in region r_i the resulting grasp $G = \{P_1, \ldots, P_n\}$ is always force-closure. The set is optimal in the sense that the smallest region has the largest length for the given set of edges, so this length gives a lower bound on the accuracy in finger positioning, (Nguyen 1985). We then pick the mid point of the region r_i as the optimal grasp point P_i.

- Synthesize a corresponding set of virtual springs, such that grasp G is stable. Each finger F_i behaves as a virtual spring with linear stiffness k_i and compression σ_{io}. We can also construct the set of n virtual springs such that the grasp has some desired compliance center and stiffness matrix.

1.4 Other Related Works

Related works can be grouped as follows:

- Force-closure grasps — Force-closure and total freedom capture the main constraint between the fingers and the grasped object. Force-closure is analyzed in details in (Ohwovoriole 1980, 1984). Efficient algorithms for constructing force-closure grasps are presented in (Nguyen 1985, 1986). Related to force-closure are the notion of degree of freedom (Bottema & Roth 1979), (Hunt 1978), and the solution of systems of linear inequations (Hunt & Tucker 1956).

- Equilibrium grasps — There are many works on analyzing the equilibrium of forces in a grasp with different types of contact (Salisbury 1982), with flexible contacts (Cutkosky 1984), or with friction (Abel, Holzmann & McCarthy 1985). Finding a good grasp is often formalized as a search of the space of all grasps with some goal function, such as optimum for internal forces (Kerr 1984), or security of grasp (Jameson 1985).

- Stable grasps — A stable prehension of a planar hand on a polygon can be found by centering the hand on the center of mass, and check for grasps that are stable with respect to rotation, then stable with respect to translation (Hanafusa & Asada 1977), (Asada 1979). (Baker, Fortune & Grosse 1985) prove that stable grasps on a convex polygon exist, and present efficient algorithms that require no incremental search.

- Compliant grasps — We can have active stiffness control of the hands and the grasped object as in (Salisbury & Craig 1981), (Salisbury 1984, 1982), or build in some proximity damping as in (Jacobsen, Wood, Knutti & Biggers 1983) Grasps can be achieved easily with active compliance and slipping at the fingers as in (Fearing 1984), or by exploiting the passive compliance of the object with the fingers and the environment as in (Mason 1982). Grasping a peg and inserting it into a hole is currently done best with a passive compliance wrist known as the Remote Center of Compliance (Whitney 1982).

2 Planar Grasps With Virtual Springs

Each finger is modelled as a virtual spring with arbitrary finite stiffness. The spring behavior can be implemented by a control loop which enforces:

$$\mathbf{f} = K(\mathbf{x_o} - \mathbf{x}) \tag{1}$$

where $\mathbf{f}$ is the force applied by the finger tip on the grasped object, K is the stiffness matrix of the finger at its tip, and $\mathbf{x}$ (resp. $\mathbf{x_o}$) is the actual (resp. desired) position of the finger tip.

The contacts between the finger tips and the grasped object are point contacts without friction. The finger tips slide on the edges of grasped object when this later is moved away from its equilibrium. The springs will compress or stretch depending on the configuration of the grasp, and depending on the displacement of the object.

Given that each finger of grasp G behaves like a spring, we would like to derive 1) the analytical conditions for which G is in stable equilibrium, and 2) the compliant behavior of grasp G about this stable equilibrium.

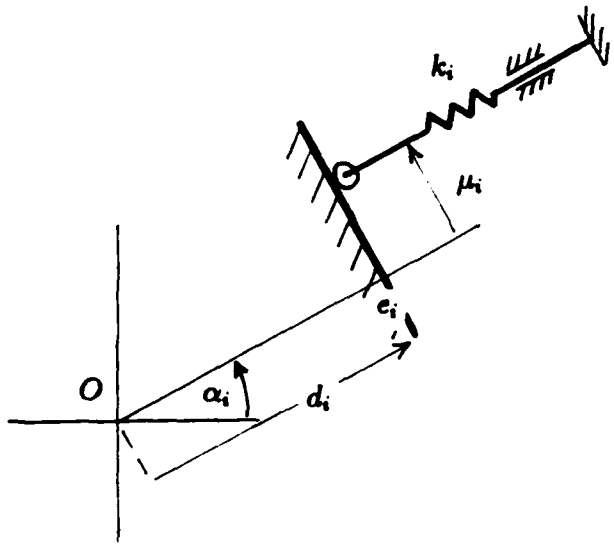

Figure 2: Contact between the finger and the grasped object.

2.1 Potential Function of a Grasp

Figure 2 shows a finger F_i with linear stiffness k_i, contacting without friction on an edge e_i. The compression of finger F_i when the grasped object is moved away by (x, y, θ) from its equilibrium is:

$$\sigma_i(x, y, \theta) = \sigma_{io} + \frac{d_i(1 - \cos\theta) + \mu_i \sin\theta + x\cos(\alpha_i + \theta) + y\sin(\alpha_i + \theta)}{\cos\theta} \quad (2)$$

where α_i and μ_i are respectively the orientation and moment of the line of action of the spring k_i about the point of rotation O, d_i is the algebraic distance from O to edge e_i. The spring k_i has direction the normal of the edge e_i, and has compression σ_{io} when grasp G is in equilibrium.

Assuming that the weight is perpendicular to the grasping plane of the object, or that the effect of gravity is negligible, the potential function of grasp G is equal to the sum of the potentials of all its springs:

$$U(x, y, \theta) = \sum_{i=1}^{n} \frac{1}{2} k_i \sigma_i^2(x, y, \theta) \quad (3)$$

where k_i, $\sigma_i(x, y, \theta)$ are respectively the spring constant and compression at finger F_i, and n is the number of fingers in grasp G.

2.2 Grasp Equilibrium

The grasp G is in equilibrium if and only if the sum of all forces and moments in the grasping plane of G is zero. This is equivalent to the first partial derivatives of the potential function $U(x, y, \theta)$ being all zero. Formally:

Theorem 1 *A grasp G composed of n virtual springs is in equilibrium if and only if:*

$$\begin{cases} \left.\frac{\partial U}{\partial x}\right|_{(0,0,0)} = \sum_{i=1}^{n} k_i \sigma_{io} \cos\alpha_i = 0 \\ \left.\frac{\partial U}{\partial y}\right|_{(0,0,0)} = \sum_{i=1}^{n} k_i \sigma_{io} \sin\alpha_i = 0 \\ \left.\frac{\partial U}{\partial \theta}\right|_{(0,0,0)} = \sum_{i=1}^{n} k_i \sigma_{io}\, \mu_i = 0 \end{cases} \tag{4}$$

where the spring constants k_i, and the compressions σ_{io} are all positive. α_i, and μ_i are respectively the orientation and the moment of the line of action of spring k_i. The spring k_i is oriented along the normal of edge e_i.

The above system of equations can be rewriten in a force-closure form:

$$\sum_{i=1}^{n} f_{io}\, \mathbf{u}_i = \mathbf{0}, \qquad f_{io} \geq 0 \tag{5}$$

where $f_{io} = k_i \sigma_{io}$, and $\mathbf{u}_i = (\cos\alpha_i, \sin\alpha_i, \mu_i)^t$ is a unit contact-wrench representing the point contact at finger F_i. Force equilibrium exists if and only if there exists a set of positive contact forces [3] $\{f_{1o}, \ldots, f_{no}\}$ such that equation (5) holds, or if the grasp is force-closure. The force-closure condition is sufficient but not necessary for the existence of force equilibrium. For example, a grasp on two parallel edges can have force equilibrium with two opposite wrenches instead of the minimum of four wrenches required for planar force-closure, (Nguyen 1985).

Corollary 1 *If grasp G is force-closure, then we can always find a set of positive contact forces at the fingers, such that G is in equilibrium.*

2.3 Grasp Stability

The grasp G is stable if and only if the potential function $U(x, y, \theta)$ of G reaches a local minimum. We can write the Taylor's expansion of the potential function $U(x, y, \theta)$ about the equilibrium as follows:

$$U(x, y, \theta) = \sum_{i=1}^{n} \frac{1}{2} k_i \sigma_{io}^2 + \mathbf{x}^t \nabla U|_{(0,0,0)} + \frac{1}{2} \mathbf{x}^t H|_{(0,0,0)} \mathbf{x} + \ldots \tag{6}$$

[3] The contact force is positive (resp. negative) if the finger is pushing into (resp. pulling out of) the object.

where $\mathbf{x} = (x, y, \theta)^t$. So, a multivariable function reaches a local minimum if 1) the first partial derivatives are all zero, and 2) the Hessian matrix of the second partial derivatives is positive definite. Formally:

Theorem 2 *A grasp G composed of n virtual springs is in stable equilibrium if both of the following hold:*

- *The gradient $\nabla U|_{(0,0,0)}$ is zero.*
- *The Hessian matrix $H|_{(0,0,0)}$ of the potential function $U(x, y, \theta)$ is positive definite.*

$$
\begin{aligned}
H_O &= \begin{pmatrix} \frac{\partial^2 U}{\partial x^2} & \frac{\partial^2 U}{\partial x \partial y} & \frac{\partial^2 U}{\partial x \partial \theta} \\ \frac{\partial^2 U}{\partial y \partial x} & \frac{\partial^2 U}{\partial y^2} & \frac{\partial^2 U}{\partial y \partial \theta} \\ \frac{\partial^2 U}{\partial \theta \partial x} & \frac{\partial^2 U}{\partial \theta \partial y} & \frac{\partial^2 U}{\partial \theta^2} \end{pmatrix} \qquad at\ (x, y, \theta) = (0, 0, 0) \\
&= \begin{pmatrix} \sum k_i \cos^2 \alpha_i & \sum k_i \sin \alpha_i \cos \alpha_i & \sum k_i \mu_i \cos \alpha_i \\ \sum k_i \sin \alpha_i \cos \alpha_i & \sum k_i \sin^2 \alpha_i & \sum k_i \mu_i \sin \alpha_i \\ \sum k_i \mu_i \cos \alpha_i & \sum k_i \mu_i \sin \alpha_i & \sum k_i (\mu_i^2 + \sigma_{io} d_i) \end{pmatrix}
\end{aligned} \tag{7}
$$

$U(x, y, \theta)$ is the potential function of grasp G, where (x, y, θ) is the displacement of the object from its equilibrium configuration.

The first clause is a restatement of force equilibrium, Equation (4). For the second clause, the Hessian matrix H_O is positive definite if and only if all its principal minors are strictly greater than zero. A principal minor of a matrix M is the determinant of an upper left submatrix of M. (Strang 1976).

$$
\begin{aligned}
\det H_1 &= \sum k_i \cos^2 \alpha_i > 0 \\
\det H_2 &= \begin{vmatrix} \sum k_i \cos^2 \alpha_i & \sum k_i \sin \alpha_i \cos \alpha_i \\ \sum k_i \sin \alpha_i \cos \alpha_i & \sum k_i \sin^2 \alpha_i \end{vmatrix} > 0 \\
\det H_3 &= \det H_O > 0
\end{aligned}
$$

The first two principal minors are always strictly positive. The third principal minor does not lead to a simple equation in terms the virtual springs. However, it has two interesting special cases for which the Hessian matrix H_O is diagonalizable. (In the next section, we'll see that the stiffness matrix of the grasp about the equilibrium is equal to the Hessian matrix. So the stiffness matrix is also diagonalizable, i.e. the grasped object behaves as though it is connected with three independent springs, Figure 4.)

1. The compliance center, or point of rotation O of the planar object, is at the common intersection of the lines of action of the springs, Figure 3. This is

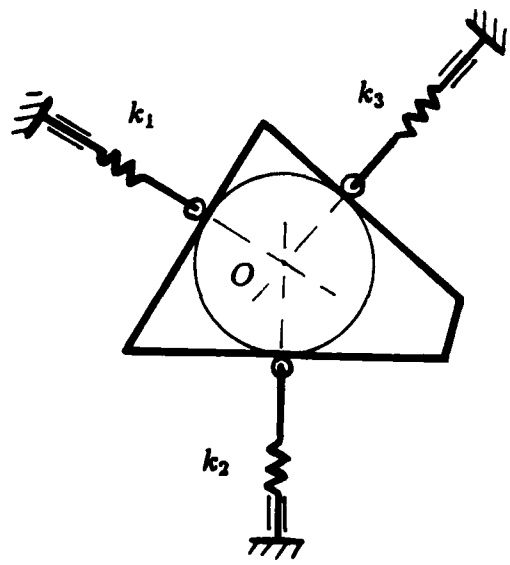

Figure 3: A stable grasp on a convex polygon.

equivalent to all the moments μ_i equal to zero. The third principal minor reduces to:

$$\det H_3 \;=\; (\det H_2) \sum k_i\, \sigma_{io}\, d_i$$

and is strictly positive if and only if $\sum k_i \sigma_{io} d_i$ is positive. This sum is invariant with the origin, and depends only on the contacting edges and the forces on these edges. A special case, reported in (Baker et al. 1984), is when the fingers contact without friction at places where the maximal inscribed circle becomes tangent to the edges of the convex polygon. Note that all the distances d_i are greater than zero, so the third principal minor is greater than zero. The grasp is stable respective to rotation and translation. However this grasp is not force-closure since we cannot exert any torque about O.

2. The compliance center, or point of rotation O of the object, is such that the weighted sum of the virtual springs is zero. The weights in this sum are the moments of the lines of action of the springs about this compliance center. Specifically:

$$\sum_{i=1}^{n} \mu_i\, \mathbf{k}_1 \;=\; \mathbf{0}$$

The third principal minor becomes:

$$\det H_3 \;=\; (\det H_2) \sum k_i \left(\mu_i^2 + \sigma_{io} d_i\right)$$

and is strictly positive if and only if:

$$\sum_{i=1}^{n} k_i \left(\mu_i^2 + \sigma_{io} d_i\right) \;>\; 0$$

The two special cases give only sufficient conditions for the existence of stable grasps. Note that the first special case is included in the second one. The next section will explore in detail the two sufficient conditions of the second special case. We'll prove that a force-closure grasp can always be made stable, and we'll show a simple and direct algorithm for constructing stable grasps. For the moment, let's summarize the sufficient conditions for stability in the following corollary:

Corollary 2 *A grasp G composed of n virtual springs is in stable equilibrium if all of the following hold:*

- *Grasp G is in equilibrium, i.e.:*

$$\sum_{i=1}^{n} \mathbf{w}_i = \mathbf{0} \tag{8}$$

where $\mathbf{w}_i = -k_i\,\sigma_{io}\,(\cos\alpha_i, \sin\alpha_i, \mu_i)^t$ is the contact wrench at finger F_i.

- *The center of compliance and the virtual springs are such that:*

$$\sum_{i=1}^{n} \mu_i\,\mathbf{k}_i = \mathbf{0} \tag{9}$$

where $\mathbf{k}_i = k_i\,(\cos\alpha_i, \sin\alpha_i)^t$.

- *The set of spring constants and the set of spring compressions are such that:*

$$\sum_{i=1}^{n} k_i\left(\mu_i^2 + \sigma_{io}\,d_i\right) > 0 \tag{10}$$

where k_i and σ_{io} are respectively the stiffness and the compression at equilibrium; α_i, μ_i are the orientation and the moment of the line of action of spring k_i about the compliance center O.

2.4 Compliance About Stable Equilibrium

The restoring wrench applied on the grasped object is equal to the negative of the gradient of $U(x, y, \theta)$. Assuming that the disturbances of the grasped object from its stable equilibrium are small, we deduce from the Taylor's expansion of $U(x, y, \theta)$ that:

$$\begin{aligned} \mathbf{w} &= -\nabla U(x, y, \theta) \\ &\approx -H|_{(0,0,0)} \begin{bmatrix} x \\ y \\ \theta \end{bmatrix} \end{aligned} \tag{11}$$

The compliance behavior of the grasped object about its stable equilibrium is described by a stiffness matrix which is equal to the Hessian matrix.

The above approximation holds for displacement in orientation θ less than 10 degrees, and for linear displacement in the xy-plane less than one tenth of the size of the grasped object. The compliance of the grasp is more sensitive to errors in orientation than location. The reason is that the stiffness normal to the edge of contact varies drastically as we rotate the object close to 90 degrees. We might no longer have restoring wrench in the correct direction, and the grasp might no longer be force-closure. If there is no error in orientation, then the restoring force opposite to a linear displacement always exists regardless of the amount of displacement. The restoring force is nothing more than the non-null sum of the contact forces generated by the springs.

From the previous section, we have seen that if the compliance center is chosen such that equation (9) holds, then the Hessian matrix has a diagonal form. This means that the stiffness matrix also has a diagonal form:

$$\begin{aligned} K &= H|_{(0,0,0)} \\ &= \begin{pmatrix} \sum k_i \cos^2 \alpha_i & \sum k_i \sin \alpha_i \cos \alpha_i & 0 \\ \sum k_i \sin \alpha_i \cos \alpha_i & \sum k_i \sin^2 \alpha_i & 0 \\ 0 & 0 & \sum k_i \left(\mu_i^2 + \sigma_{io} d_i\right) \end{pmatrix} \end{aligned} \tag{12}$$

Note that the angular displacement is decoupled from the two linear displacements of the object. The grasped object behaves as though there are three independent springs attached to it. Figure 4.

- An angular spring with stiffness k_θ, and axis perpendicular to the grasping plane and going through the center of compliance O of the object.

$$k_\theta = \sum_{i=1}^{n} k_i \left(\mu_i^2 + \sigma_{io} d_i\right) \tag{13}$$

- Two linear springs with respective stiffness k_a, k_b, along two perpendicular axes in the grasping plane of the object. The stiffnesses and directions of these two linear springs are respectively the eigenvalues and the eigenvectors of the following 2×2 symmetric matrix:

$$K_{xy} = \begin{pmatrix} \sum k_i \cos^2 \alpha_i & \sum k_i \sin \alpha_i \cos \alpha_i \\ \sum k_i \sin \alpha_i \cos \alpha_i & \sum k_i \sin^2 \alpha_i \end{pmatrix} \tag{14}$$

The two eigenvalues k_a, k_b are both greater than zero because K_{xy} is positive definite. The two coresponding eigenvectors are perpendicular because K_{xy} is symmetric. We have a linear stiffness field in the shape of an ellipse.

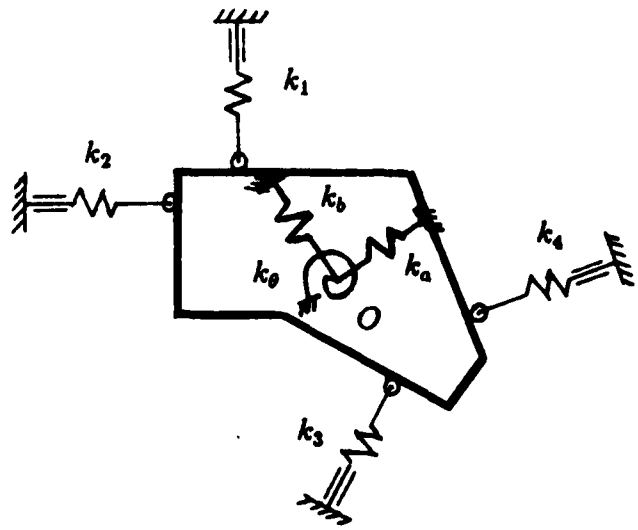

Figure 4: Compliance of the grasped object about its stable equilibrium.

The matrix K_{xy} is nothing more than the sum of the individual stiffness matrices of the fingers expressed in the global frame of the hand:

$$\begin{aligned} K_{xy} &= \textstyle\sum_{i=1}^{n} k_i \begin{pmatrix} \cos^2\alpha_i & \sin\alpha_i\cos\alpha_i \\ \sin\alpha_i\cos\alpha_i & \sin^2\alpha_i \end{pmatrix} \\ &= \textstyle\sum_{i=1}^{n} Rot\,(\alpha_i) \begin{pmatrix} k_i & 0 \\ 0 & 0 \end{pmatrix} Rot\,(-\alpha_i) \end{aligned}$$

where $Rot(\alpha_i)$ is the rotation from the base reference frame to the local frame at the finger tip.

The linear stiffness matrices add up to K_{xy}. The angular effects of these virtual springs also add up into the first sum of the angular stiffness k_θ:

$$k_\theta = \sum_{i=1}^{n} k_i\,\mu_i^2 + \sum_{i=1}^{n} f_{io}\,d_i$$

This angular effect depends on the moments of the lines of action of the springs about the center of rotation O. The second sum depends on the configuration of the fingers, whether the grasp is an outside-in or inside-out grasp (see Section 3.2). This sum describes the effect of the grasp configuration in resisting rotation of the grasped object about O.

3 Construction of Stable Grasps

In the previous section, we have derived the analytical conditions for stable equilibrium. In this section, we will 1) explore the physical meanings of the analytical conditions (9) and (10), 2) prove that a force-closure grasp can always be made stable, and 3) give a simple algorithm for constructing a stable grasp assuming that it is force-closure.

3.1 Center of Compliance

From Section 2.4, we saw that the stiffness matrix is diagonalizable with independent linear and angular springs if and only if equation (9) holds. Let's rewrite equation (9) to make explicit the region in which the compliance center of the grasp must be:

$$\sum_{i=1}^{n} \mu_i \mathbf{k}_i = \sum_{i=1}^{n} |\mu_i| \, (sign(\mu_i)\mathbf{k}_i) = \mathbf{0}$$

When can we find a set of positive spring constants $\{k_1, \ldots, k_n\}$ such that the above equation holds? The equation looks very much like the force-closure condition in the plane, except that we deal with only force directions. It can always be satisfied if the vectors $\{sign(\mu_i)\mathbf{k}_i\}$ span the space of all directions in the plane (Nguyen 1985). The sign of the moment μ_i depends on the position of the compliance center with respect to the line of action of the virtual springs. This means that the compliance center must be inside some polygon delimited by the lines of action of the virtual springs. This polygon is called the *compliance polygon* of the grasp. Figure 5 shows the compliance polygon Ω_G within which the compliance center of grasp G must be.

We now prove that if the grasp is force-closure then the compliance polygon always exists, and so equation (9) can be satisfied. Note that if grasp G is force-closure then the two cones generated by $(-\mathbf{k}_1, -\mathbf{k}_2)$ and $(-\mathbf{k}_3, -\mathbf{k}_4)$ counter-overlap in a non-zero convex polygon C_G, Figure 6. If we pick the compliance center O inside this convex polygon, then the springs k_1 and k_3, resp. k_2 and k_4, have negative, resp. positive, moments about O. One can check that there exists a positive linear combination of $-\mathbf{k}_1, \mathbf{k}_2, -\mathbf{k}_3, \mathbf{k}_4$ such that one walks counter-clock-wise along the boundary of the convex polygon bounded by the lines of action of the springs. Equation (9) holds, and so the compliance polygon is always non null for force-closure grasps. The following corollary formalizes the above results:

Corollary 3 *If grasp G is force-closure then:*

- *The compliance polygon of grasp G, denoted Ω_G, is non empty. The compliance polygon Ω_G has boundary supports the lines of action of the springs. Ω_G is the domain of the reference point O for which the vectors $\{sign(\mu_i)\mathbf{k}_i\}$ span the space of all directions in the plane.*

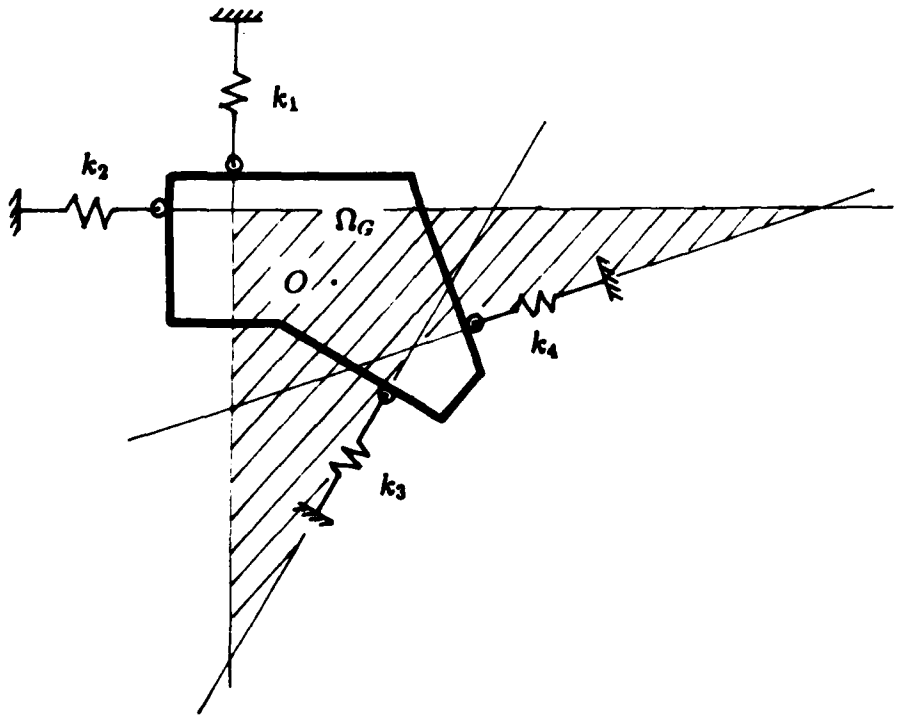

Figure 5: Compliance polygon of a grasp.

- *The convex polygon C_G bounded by the lines of action of the springs is included in the compliance polygon Ω_G.*
- *If we pick the compliance center O of grasp G within the polygon Ω_G, then there always exists a set of spring constants $k_1, \ldots, k_n$ such that the stiffness matrix of grasp G is diagonalizable, or such that equation (9) holds.*

We prefer to pick the compliance center within the convex polygon C_G so that the spring constants are more or less equal. Within this polygon, the desired location of the compliance center O in the global frame depends on the task at hand. For example, to insert a peg into a hole, we ideally want to put the center of compliance at the mouth of the hole (Whitney 1982). Note that grasping the peg with force-closure requires to put fingers on all four sides of the peg, which is unfeasible! Luckily we can have force-closure with two point contacts with friction, and so we can grasp at the top of the peg and at the same time have a compliance center at the mouth of the hole, [4] (Nguyen 1986). We achieve the same effect as the RCC gripper. But, with an active compliance hand, we have more flexibility in choosing the compliance center and the stiffness matrix of the grasp. We can achieve both a stable grasp and a desired compliant behavior of the grasped object during assembly.

[4] The analysis of stable grasps with 2 point contacts with friction is similar to the analysis given in this paper. The form of the stiffness matrix is the same except the expression of k_θ has a minus sign instead of a plus sign. $k_\theta = \sum k_i \left(\mu_i^2 - \sigma_{i0} d_i\right)$

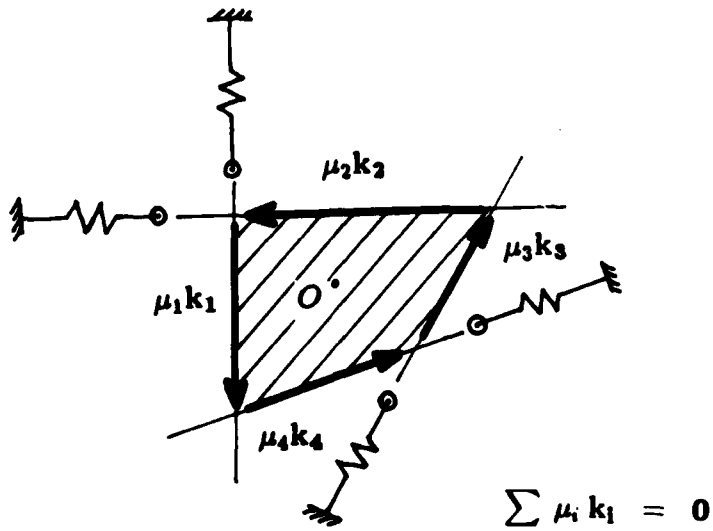

Figure 6: Compliance polygon always exists for force-closure grasps.

3.2 Outside-In / Inside-Out Grasps

We have seen in Section 2.4 that the left hand side of inequation (10) is nothing more than the angular stiffness k_0 of grasp G when the object is slightly rotated from its stable orientation. To have restoring couples in the correct direction, this stiffness must be strictly positive. The stiffness k_0 can be rewritten as:

$$\begin{aligned} k_0 &= \textstyle\sum_{i=1}^{n} k_i \left(\mu_i^2 + \sigma_{io} d_i\right) \\ &= \textstyle\sum_{i=1}^{n} k_i \mu_i^2 \;+\; \sum_{i=1}^{n} f_{io} d_i \end{aligned}$$

where $f_{io} = k_i \sigma_{io}$ is the contact force on edge e_i when grasp G is in equilibrium. The first sum in the above expression depends on the placement of the compliance center inside the compliance polygon Ω_G. This sum is positive and increases as the compliance center moves to the boundary of Ω_G. The second sum is invariant with the location of the compliance center. It depends only on the contact forces and the relative configuration of the contacting edges.

How can we have positive angular stiffness k_0? First, if the distances d_i are all strictly positive, then the angular stiffness k_0 is also strictly positive. This observation leads to a classification of grasp configurations into three categories defined as follows:

- A grasp G is called an *outside-in* grasp if and only if the closed half planes of the contacting edges of G intersect.
- A grasp G is called an *inside-out* grasp if and only if the open half planes of the contacting edges of G intersect.

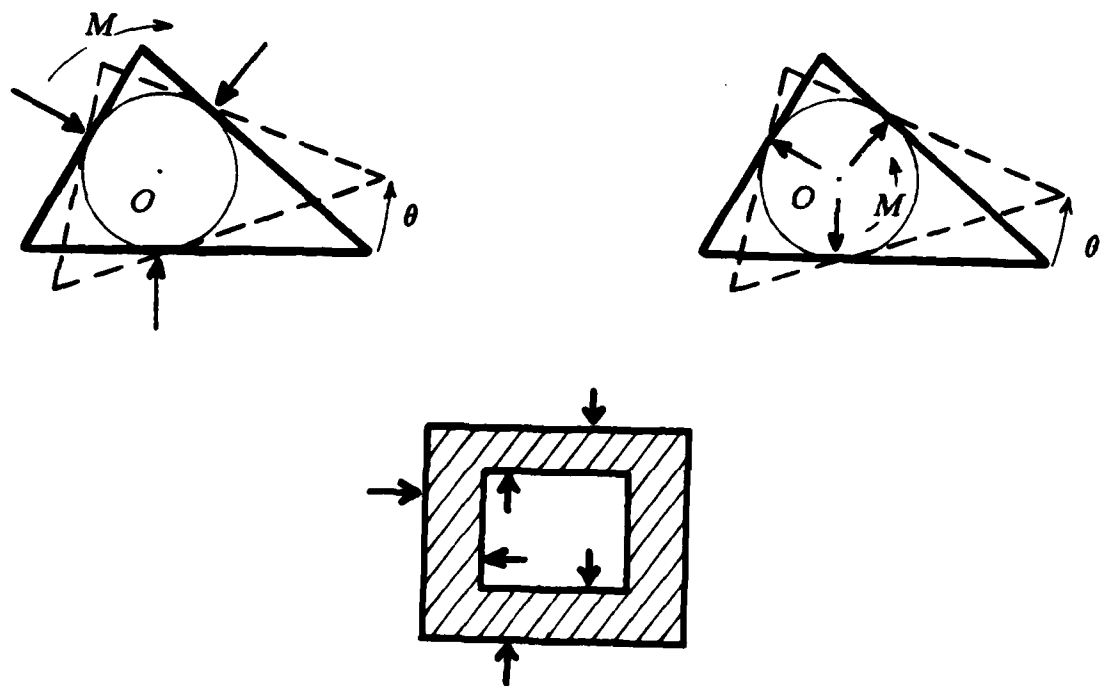

Figure 7: Outside-in / inside-out / mixed grasps.

- A grasp G is called a *mixed* grasp if and only if neither the closed half planes nor the open half planes intersect.

Grasps on the boundary of convex objects are examples of outside-in grasps. Grasps on the boundary of convex holes are examples of inside-out grasps. If a grasp G has exactly the minimum number of contacts required for force-closure, then grasp G is either outside-in or inside-out grasp. Mixed grasps come up only when there are more contacts than the minimum of two for point contacts with friction, and four for point contacts without friction, Figure 7.

From the expression of the angular stiffness k_θ, we see that it is always strictly positive for outside-in grasps. We can prove this by noting that the second sum is invariant to the position of the origin, so we can pick the origin to be in the intersection of the closed half planes, and have all the distances d_i positive.

The angular stiffness k_θ may be negative for inside-out, and mixed grasps. Figure 7 shows two grasps on a same triangular ring. One would suspect that the two grasps on the triangular ring have the same behavior. But surprisingly, one finds that the outside-in grasp is stable, while the inside-out grasp is in an unstable equilibrium, corresponding to a local maximum of the potential function $U(x, y, \theta)$, or a negative stiffness k_θ.

Luckily, with force-closure grasps, we have another positive term in the expression of k_θ, which depends on the moments of the springs about the center of compliance. By scaling up the set of spring constants while keeping constant the set of contact forces we can make the first sum greater than the second sum, and

have k_θ strictly positive. This is possible only if the moments μ_i are not all zero, which means that the lines of action of the virtual springs do not all pass through the compliance center. A sufficient condition is again the force-closure condition. [5] The following corollary formalizes the above interesting results:

Corollary 4 *The angular stiffness k_θ of grasp G can be made strictly positive if either of the following is true:*

- *Grasp G is an outside-in grasp.*
- *The compliance center of G is not at the common intersection of the lines of action of the virtual springs.*
- *Grasp G is force closure.*

3.3 Making a Force-Closure Grasp Stable

If grasp G is force-closure, then:

- We can always synthesize a set of contact forces $\{f_{1o}, \ldots, f_{no}\}$ at the finger tips such that grasp G has force equilibrium (Corollary 1).
- We can choose the compliance center and the corresponding set of spring constants $\{k_1, \ldots, k_n\}$, such that the stiffness matrix K_G of the grasp is diagonalizable (Corollary 3).
- We can make the angular stiffness k_θ strictly positive, and so have the stiffness matrix K_G positive definite (Corollary 4).

From Corollary 2, we conclude that we can always make a force-closure grasp stable, and this is the culminating corollary of this paper.

Corollary 5 *Let G be a planar grasp with n fingers, each is a virtual spring with arbitrary finite stiffness k_i and compression σ_{io}. If grasp G is force-closure then we can always synthesize a compliance center O and a set of n virtual springs such that both of the following hold:*

- *The grasp configuration G is in a stable equilibrium.*
- *The compliance behavior of the grasped object about its compliance center O is described by three orthogonal springs: two linear springs in the grasping plane of the object, and one angular spring about compliance center O.*

[5] If the lines of action of the virtual springs all intersect at a common point, then we cannot generate couple, so the grasp is not force-closure. Conversely, the lines of action of the virtual springs of a force-closure grasp never all intersect at a common point.

Algorithm 1 *A force-closure grasp G with n virtual springs can be made stable as follows:*

1. *Find a set of contact forces $\{f_{1o}, \ldots, f_{no}\}$ such that force equilibrium is achieved.*
2. *Pick a compliance center O from the compliance polygon Ω_G, or preferably from the restricted convex polygon C_G.*
3. *Find a set of positive spring constants $\{k_1, \ldots, k_n\}$ such that:*

$$\sum_{i=1}^{n} k_i \, \mu_i \, \mathbf{u}_i = \mathbf{0}$$

   where $\mathbf{u}_i$ and μ_i are respectively the direction and moment of the virtual spring k_i about the compliance center O.

4. *Check that the angular stiffness k_θ of grasp G is strictly positive:*

$$k_\theta = \sum_{i=1}^{n} k_i \left(\mu_i^2 + \sigma_{io} d_i\right)$$

   If not scale up the set of spring constants $\{k_1, \ldots, k_n\}$ keeping the set of contact forces $\{f_{1o}, \ldots, f_{no}\}$ unchanged, until k_θ is greater than zero.

5. *Find the virtual compressions at equilibrium:*

$$\sigma_{io} = \frac{1}{k_i} f_{io}$$

6. *Output the set of spring constants $\{k_i, \ldots, k_n\}$, and the respective set of compressions $\{\sigma_{1o}, \ldots, \sigma_{no}\}$ such that each finger F_i behaves as a virtual spring as follows:*

$$\mathbf{F}_i = \begin{bmatrix} F_{in} \\ F_{it} \end{bmatrix} = \begin{pmatrix} k_i & 0 \\ 0 & 0 \end{pmatrix} \begin{bmatrix} \sigma_{io} - \sigma_i \\ 0 - \tau_i \end{bmatrix}$$

   where $\mathbf{F}_i$ is the force applied by the finger tip F_i on the grasped object, and $(\sigma_i, \tau_i)^t$ is the displacement of the finger normal and tangential to the ith contacting edge.

Complexity 1 *A force-closure grasp G with n virtual springs can be made stable in $O(n)$ time. We assume that the n springs are sorted by their directions.*

Proof:

- Step 1 is equivalent to solving a system of three equations in n unknowns, and so costs $O(n)$ time. Equation (4). Similarly, step 3 costs $O(n)$ time.

- For step 2, the complete compliance polygon Ω_G is expensive to compute because we have to check for force-direction closure on each of the $O(n^2)$ polygons from the plane partition induced by the n lines of action. Each check will cost $O(n)$ time, so the compliance polygon Ω_G can be computed in $O(n^3)$ time.

  However, we can use the convex polygon C_G bounded by the lines of action of the virtual springs as a subset of Ω_G, and pick the compliance polygon from it. As noted earlier, we prefer to pick a compliance center within the convex polygon C_G so that the springs are more or less equal. The drawback is that C_G is smaller than Ω_G. The convex polygon C_G can be built in $O(n)$ time assuming that the edge normals are sorted. So, we can pick a compliance center in $O(n)$ time.

- The remaining steps 4, 5, and 6 all costs $O(n)$ time each.

We conclude that a force-closure grasp can be made stable in $O(n)$ time. ∎

3.4 Controlling a Compliant Grasp

Figure 8 shows the relationships between force and instantaneous displacement at three different levels:

- At the grasped object, we want to choose a compliance center and a stiffness matrix for grasp G such that the grasped object is stable and have restoring wrenches as follows:

$$\mathcal{F} = K_G \, d\chi$$

- From the desired compliance at the grasped object, we would like to deduce the corresponding set of spring constants and compressions at the finger tips:

$$F = K_F \, dx$$

- From the virtual springs at the finger tips, we then would like to derive the stiffness at all of its joints:

$$T = K_J \, d\theta$$

  We can go further and derive the gains in the control loop of each joint, such that the above joint compliance is enforced. Or we can assume that each joint has a stiffness control loop with programmable stiffness.

From the kinematics of the linked fingers, we know that the force and velocity at each finger tip relate with its corresponding joint torques and velocities by the Jacobian J. Similarly, from the kinematics of the grasp, the velocity and external/internal forces applied at the grasped object relate with the velocities and forces at the finger tips by the grasp matrix G, (Salisbury & Craig 1981). We get

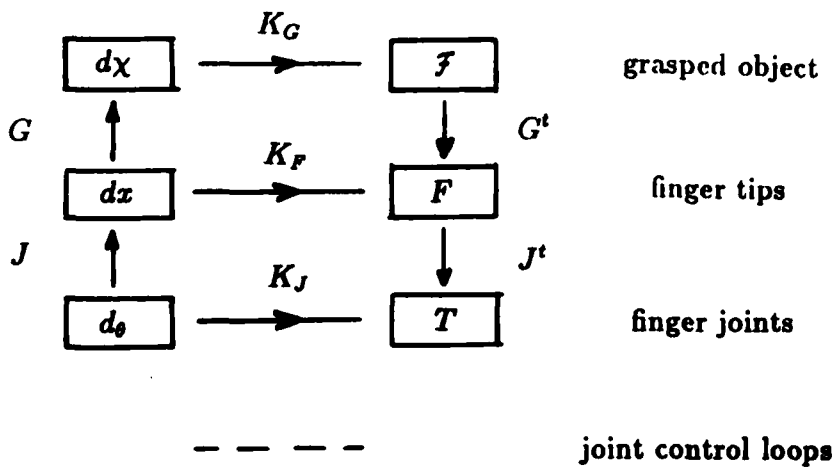

Figure 8: Linked chains and their loop equations.

loops from which we can derive very easily the stiffness matrix of one level in terms of the stiffness matrix of another level. For example, given the desired compliance K_G at the grasped object, we deduce:

$$\begin{aligned} K_F &= G^t K_G G \\ K_J &= J^t G^t K_G G J \end{aligned}$$

This derivation is valid if the fingers of the hand and the grasped object are connected in a linked chain. The linked-chain condition is equivalent to having fixed grasp points, and being able to exert forces both ways through these grasp points.

Unfortunately, the grasp points are not fixed because there is no friction between the finger tips and the edges of the object. So, the kinematics of the closed loop chain change as the object is moved between the fingers. Also, there is no glue between the finger tips and the object, so we can only push on the object, and not pull this later. Finally, we can only press a linear spring normal to the edge of contact because there is no tangential force due to no friction. This is why we have to explicitly model the contacts and the fingers, then derive the potential function and the compliance of the grasp.

This paper discusses in great detail the constraints in the top loop. Algorithm 1 shows how to synthesize a set of virtual springs at the finger tips to get a desired compliance K'_G of the grasped object. K'_G is the Hessian matrix of the potential function of the virtual springs k_i about the equilibrium. K'_F is the stiffness matrix of the springs k_i when expressed in the global reference frame. The stiffness matrices

at the object K'_G, and at the fingers K'_F are related by the conservation of the potential energy in the system, not by the fixed grasp configuration G.

From the kinematics of the fingers, we can deduce the stiffness at the finger joints:

$$K'_J = J^t K'_F J$$

and use this to control the joints. Each finger can be servoed independently, and so the execution of a grasp can very fast. Any oscillation will hopefully be damped by the mechanical damping in the fingers and some nominal damping in the joint control loops.

Grasp execution is greatly simplified and a lot less sensitive to errors, because of the existence of stable configurations. Knowing that a stable grasp exists on a set of edges, we can just grasp near the desired stable grasp points and let the fingers adjust themselves on these edges until they end up on the planned grasp points. The grasp is also robust to disturbances. If the object is accidentally displaced, there will be restoring wrenches that will pull it back to its stable equilibrium. All this is done automatically, quickly, and without any extra effort from planning and execution.

4 Conclusion and Extensions

The contact between the grasped object and the fingers of a dextrous hand is different from traditional bar linkages, or open linked arms in that the links vary as the object is moved between the fingers. We have shown how to analyze a compliant grasp by explicitly modeling the contacts and the fingers. From the potential function of the grasp, we deduce the sufficient conditions for equilibrium and stability. We presented an algorithm for synthesizing a set of virtual springs at the finger tips to get a desired compliance of the grasped object. We also showed how to servo a compliant grasp with stiffness control at the finger joints. The most important result of this paper is: "All force-closure grasps can be made stable". The result is proved for the case the fingers behave as virtual springs, and the contacts between the finger tips and the object are frictionless.

The same line of analysis and synthesis can be worked out for other types of grasps such as:

- Planar grasps with point contacts with friction.
- 3D grasps with point contacts with/without friction.
- 3D grasps with soft finger contacts.
- Grasps with more complex contacts, such as edge/plane contacts, plane/plane contacts, etc...

Some of the extensions mentioned above are currently explored and will be reported in (Nguyen 1986). Experiments also need to be done, and we'll use the Salisbury's three-finger hand to experiment with compliant grasps.

Acknowledgements

This report describes research done at the General Motors Research Laboratories, during the summer of 1985. I benefit from the warm and flexible research environment which is due to my supervisor Robert Tilove, my office-mate Richard Young, and my colleagues and readers: Jeffrey Kerr, Andrea Simon, James Mildrew, Savarjit Sinha, Brian Schunck, and many more at the laboratories.

Part of the research described here is done at the MIT Artificial Intelligence Laboratory. I would like to thank Tomás Lozano-Pérez, Kenneth Salisbury, Sundar Narasimhan, and my office-mate Alain Lanusse at the MIT Artificial Intelligence Laboratory for sharing my enthusiasm over new ideas and results. As always, Tomás Lozano-Pérez carefully reads drafts of this paper, and makes many comments which improve its clarity.

Last but not least, my gratitude goes to my parents and to my fiancée for the joy and happiness that fill my summer of 1985.

Bibliography

Abel, J.M., Holzmann, W., McCarthy, J.M. "On Grasping Planar Objects With Two Articulated Fingers" Proc. IEEE Intl. Conference on Robotics and Automation, St. Louis, March 1985.

Asada, H. "Studies on Prehension and Handling by Robot Hands with Elastic Fingers" Ph.D. thesis, Kyoto University, April 1979.

Baker, B.S., Fortune, S.J., Grosse, E.H. "Stable Prehension with a Multi-Fingered Hand: Extended Abstract" Proc. IEEE Intl. Conference on Robotics and Automation, St. Louis, March 1985.

Bottema, O. & Roth, B. "Theoretical Kinematics" North Holland, Amsterdam, 1979.

Brady, M et. al "Robot Motion: Planning and Control" MIT Press, Cambridge, 1982.

Brady, M. & Paul, R. editors "Robotics Research" MIT Press, Cambridge, Vol. 1, 1984, and Vol. 2, 1985.

Cutkosky, M.R. "Mechanical Properties for the Grasp of a Robotic Hand" CMU-RI-TR-84-24, Carnegie Mellon Robotics Institute, 1984.

Fearing, R.S. "Simplified Grasping and Manipulation with Dextrous Robot hands" MIT AI Memo 809, MIT Artificial Intelligence Lab, Nov. 1984.

Hanafusa, H., & Asada, H. "Stable Prehension By a Robot Hand With Elastic Fingers" Proc. of 7th Intern. Symp. on Industrial Robots, 1977. (Reprinted in "Robot Motion", Brady et al.).

Hogan, N. "Impedance Control of Industrial Robots" Robotics and Computer Integrated Manufacturing, Vol. 1, No. 1, 1984.

Hunt, K.H. & Tucker, A.W. editors "Linear Inequalities and Related Systems" Annals of Math. Studies, Vol 38, pp. 96-114, Princeton, 1956.

Hunt, K.H. "Kinematic Geometry Of Mechanisms" Clarendon Press, Oxford, 1978.

Jacobsen, S.C., Wood, J.E., Knutti, D.F., Biggers, K.B. "The Utah/MIT Dextrous Hand: Work in Progress" Int. Journal of Robotics Research, Vol. 3, No. 4, 1984.

Jameson, J.W. "Analytic Techniques for Automated Grasps" Ph.D. thesis, Dept. of Mechanical Engineering, Stanford University, June 1985.

Kerr, J.R. "An Analysis of Multi-Fingered Hands" Ph.D. thesis, Dept. of Mechanical Engineering, Stanford University, Dec. 1984.

Mason, M.T. "Manipulator Grasping and Pushing Operations" AI-TR-690, MIT Artificial Intelligence Laboratory, June 1982.

Nguyen, V. "The Synthesis of Force-Closure Grasps in the Plane" MIT AI Memo 861, MIT Artificial Intelligence Lab, Sept 1985.

Nguyen, V. "Planning Grasps for Dextrous Hands" Forthcoming S.M. thesis, Dept. of Electrical Engineering and Computer Science, Massachusetts Institute of Technology, June 1986.

Ohwovoriole, M.S. "An Extension of Screw Theory and Its Application to the Automation of Industrial Assemblies" Ph.D. Thesis, Dept. of Mechanical Engineering, Stanford University, April 1980.

Ohwovoriole, E.N. "On The Total Freedom of Planar Bodies With Direct Contact" ASME Transactions, 1984.

Paul, R., Shimano, B. "Compliance and Control" Proc. Joint Automatic Control Conference, Purdue University, July 1976.

Salisbury, J.K. "Kinematic and Force Analysis of Articulated Hands" Ph.D. thesis, Dept. of Computer Science, Stanford University, July 1982.

Salisbury, J.K. "Design and Control of an Articulated Hand" Proc. 1st Int. Symposium on Design and Synthesis, Tokyo, July 1984.

Salisbury, J.K. & Craig, J.J. "Articulated Hands: Force Control and Kinematic Issues" Proceedings of Joint Automatic Control Conference, Virginia, June 1981. (Reprinted in Robotics Research, vol. 1).

Strang, G. "Linear Algebra and Its Application" Academic Press, 1976.

Whitney, D.E. "Quasi-Static Assembly of Compliantly Supported Rigid Parts" Journal of Dynamics Systems, Measurement, and Control, March 1982. (Reprinted in "Robot Motion", Brady, M. et al.)

END
DTIC
4-86