AD-A163 598 THE SCIENCE OF AND ADVANCED TECHNOLOGY FOR COST-EFFECTIVE MANUFACTURE OF..(U) PURDUE UNIV LAFAYETTE IN SCHOOL OF INDUSTRIAL ENGINEERING 1/4

UNCLASSIFIED R VENUGOPAL ET AL. OCT 85 N00014-83-K-0385 F/G 13/9 NL

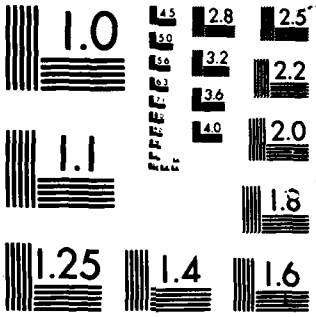

MICROCOPY RESOLUTION TEST CHART
NATIONAL BUREAU OF STANDARDS 1963-A

THE SCIENCE OF AND ADVANCED TECHNOLOGY FOR COST—EFFECTIVE MANUFACTURE OF HIGH PRECISION ENGINEERING PRODUCTS

DTIC
ELECTE
FEB 05 1986
S D
D

ONR Contract No 83K0385
FINAL REPORT
Vol. 4

AD-A163 598

THERMAL EFFECTS ON THE ACCURACY OF NUMERICALLY CONTROLLED MACHINE TOOLS

PREPARED BY
Raghunath Venugopal and M. M. Barash

OCTOBER 1985

DTIC FILE COPY

Schools of
Industrial, Electrical and Mechanical Engineering
Purdue University
West Lafayette, Indiana 47907

DISTRIBUTION STATEMENT A
Approved for public release;
Distribution Unlimited

86 1 24 114

REPRODUCED BY GOVERNMENT LICENSE

DISCLAIMER NOTICE

THIS DOCUMENT IS BEST QUALITY PRACTICABLE. THE COPY FURNISHED TO DTIC CONTAINED A SIGNIFICANT NUMBER OF PAGES WHICH DO NOT REPRODUCE LEGIBLY.

None
SECURITY CLASSIFICATION OF THIS PAGE

AD-A163 598

REPORT DOCUMENTATION PAGE

1a REPORT SECURITY CLASSIFICATION None	1b RESTRICTIVE MARKINGS None
2a SECURITY CLASSIFICATION AUTHORITY None	3 DISTRIBUTION/AVAILABILITY OF REPORT
2b DECLASSIFICATION/DOWNGRADING SCHEDULE None	
4 PERFORMING ORGANIZATION REPORT NUMBER(S) Final Report Vol. 4	5 MONITORING ORGANIZATION REPORT NUMBER(S)
6a NAME OF PERFORMING ORGANIZATION PURDUE UNIVERSITY 6b OFFICE SYMBOL (If applicable)	7a NAME OF MONITORING ORGANIZATION Department of Defense Office of Naval Research
6c ADDRESS (City, State, and ZIP Code) School of Industrial Engineering West Lafayette, Indiana 47907	7b ADDRESS (City, State, and ZIP Code) Arlington, VA 22217-5000
8a NAME OF FUNDING/SPONSORING ORGANIZATION 8b OFFICE SYMBOL (If applicable) 614A	9 PROCUREMENT INSTRUMENT IDENTIFICATION NUMBER N00014-83-K-0385/12/12
8c ADDRESS (City, State, and ZIP Code)	10 SOURCE OF FUNDING NUMBERS PROGRAM ELEMENT NO: ONR: 433 PROJECT NO: TASK NO: SRO-153 WORK UNIT ACCESSION NO:

11 TITLE (Include Security Classification)
THERMAL EFFECTS ON THE ACCURACY OF NUMERICALLY CONTROLLED MACHINE TOOLS

12 PERSONAL AUTHOR(S)
Venugopal, Raghunath and M. M. Barash

13a TYPE OF REPORT	13b TIME COVERED	14 DATE OF REPORT (Year, Month, Day)	15 PAGE COUNT
Final	FROM 1-1-83 TO 8-15-85	October 1985	365

16 SUPPLEMENTARY NOTATION

17 COSATI CODES			18 SUBJECT TERMS (Continue on reverse if necessary and identify by block number)
FIELD	GROUP	SUB GROUP	Machine tool design; M/T accuracy; Computer modeling of machine tools; M/T thermal errors; Error models and prediction; Metrology; Automation.
13			

19 ABSTRACT (Continue on reverse if necessary and identify by block number)

Thermal effects on the accuracy of numerically controlled machine tools are specially important in the context of unmanned manufacture or under conditions of precision metal cutting. Removal of the operator from the direct control of the metal cutting process has created problems in terms of maintaining accuracy. The objective of this research is to study thermal effects on the accuracy of numerically controlled machine tools.

The initial part of the research report is concerned with the analysis of a hypothetical machine. The thermal characteristics of this machine are studied. Numerical methods for evaluating the errors exhibited by the slides of the machine are proposed and the possibility of predicting thermally induced errors by the use of regression equations is investigated. A method for computing the workspace error is also presented.

Machine tools are generally made of box type structures. Based on analysis of box type structures, theoretical evidence for the prediction of machine tool errors is presented. The problem of heat flow in a box made of thin plates is studied and analytic solutions are derived.

(over)

20 DISTRIBUTION/AVAILABILITY OF ABSTRACT ☐ UNCLASSIFIED/UNLIMITED ☒ SAME AS RPT ☐ DTIC USERS	21 ABSTRACT SECURITY CLASSIFICATION None
22a NAME OF RESPONSIBLE INDIVIDUAL Dr. David Mizell, Scientific Officer	22b TELEPHONE (Include Area Code) 818-795-5971 x 56 22c OFFICE SYMBOL 433

DD FORM 1473, 84 MAR — 83 APR edition may be used until exhausted. All other editions are obsolete.

SECURITY CLASSIFICATION OF THIS PAGE
None

19. (continued)

The final part is concerned with the actual measurement of errors on a modern CNC machining center. Thermal influences on the errors is the main objective of the expermental work. Based on experimental evidence, it is shown that thermal effects on the accuracy of machine tools can be predicted by the use of simple regression equations. Finally, numerical methods are used to predict thermal influences on the errors of machine tools. These methods make use of measured values of temperatures for prediction of errors.

Based on the evidence presented in this report it is shown conclusively that thermal influences on the errors of machine tools are predictable. Techniques for determining thermal effects on machine tools at a design stage are also presented.

THE SCIENCE OF AND ADVANCED TECHNOLOGY FOR COST-EFFECTIVE MANUFACTURE OF HIGH PRECISION ENGINEERING PRODUCTS

ONR Contract No. 83K0385
Final Report
Vol. 4

THERMAL EFFECTS OF THE ACCURACY OF NUMERICALLY CONTROLLED MACHINE TOOLS

Prepared by
Raghunath Venugopal and M. M. Barash

Accesion For
NTIS CRA&I ☑
DTIC TAB ☐
Unannounced ☐
Justification
By ltr. on file
Dist. ibution /
Availability Codes
Dist | Avail and / or Special
A-1 | 23

QUALITY INSPECTED 3

October 1985

Schools of
Industrial, Electrical and Mechanical Engineering
Purdue University
West Lafayette, Indiana 47907

This report represents, with minor changes, the thesis submitted by Mr. Raghunath Venugopal to the Faculty of Purdue University for the award of the Degree of Doctor of Philosophy.

Research described in this report has been supported by the Office of Naval Research through Contract No. N83K0385 in the framework of the ONR Precision Engineering projects.

M. M. Barash served as Major Professor for the thesis; he is a member of the faculty of the School of Industrial Engineering at Purdue University.

Work on the Precision Engineering project at Purdue University greatly benefited from the use of the technical facilities of the Purdue Computer Integrated Design, Manufacturing and Automation Center (CIDMAC) and the advice of the CIDMAC member companies*, which is gratefully acknowledged.

Moshe M. Barash
Principal Investigator

C. Richard Liu
Principal Investigator

*Member companies of CIDMAC are:
Cincinnati Milacron; TRW; Ransburg Corporation; Cummins Engine Co.; Control Data Corporation; ALCOA.

TABLE OF CONTENTS

	Page
LIST OF TABLES	v
LIST OF FIGURES	vii
NOTATION	xi
ABSTRACT	xiii
CHAPTER 1. INTRODUCTION	1
1.1 General	1
1.2 Problem Statement and Objectives	3
1.3 Literature Review	9
1.3.1 Quasistatic Errors of a Machine Tool	10
1.3.2 Thermal Effects	19
CHAPTER 2. TEMPERATURE AND ELASTIC DEFORMATION CALCULATIONS	32
2.1 General	32
2.2 Heat Transfer Problem	33
2.3 Boundary Conditions	37
2.4 Evaluation of Heat Transfer Coefficient	38
2.5 Some Numerical Results	40
2.6 The Elastic Problem	40
CHAPTER 3. COMPUTATION OF MACHINE ERRORS	49
3.1 General	49
3.2 Evaluation of Structural Errors	51
3.3 Assessment of Volumetric Errors	54
3.3.1 Model 1	58
3.3.2 Model 2	60
3.3.3 Model 3	62

3.4 Regression Model and Prediction Results..... 65

CHAPTER 4. ANALYTIC SOLUTIONS..... 73

4.1 General..... 73
4.2 A Problem of 3 D Thermoelasticity.. 74
4.3 Heat Conduction in a Cube..... 91
4.4 Solution of Displacement in a Cube..... 106

CHAPTER 5. EXPERIMENTAL WORK..... 108

5.1 General..... 108
5.2 Equipment Used for Measurement of Machine Tool Errors..... 109
5.3 Experimental Conditions..... 116
5.3.1 Additional Sources of Experimental Error..... 123
5.4 Experimental Results..... 124
5.4.1 Discussion on Positioning Errors..... 129
5.4.2 Other Errors..... 137
5.5 Prediction by Numerical Methods.... 142
5.6 Conclusions 160
5.7 Recommendations for Further Research..... 168

LIST OF REFERENCES..... 171

APPENDICES

Appendix 1..... 177
Appendix 2..... 195
Appendix 3..... 201
Appendix 4..... 316
Appendix 5..... 347

LIST OF TABLES

Table		Page
2.1	Comparison of Number of Nodes.....	41
2.2	Comparison of Time Step.....	41
3.1	Error of Outer Most Point of Work Space of Machine Tool, Numerical Work.....	64
5.1	Expansion of Lead Screw (microns)..	136
5.2	Error of Work Space, Experimental Work, No Lead Screw Errors.....	144
5.3	Error of Work Space, Computed, by Regression Equations No Lead Screw Errors.....	145
5.4	Error of Work Space, Experimental Work, Lead Screw Error is Considered.....	146
5.5	Error of Work Space, Computed, by Regression Equations, Lead Screw Error is Considered.....	147
5.6	Error Components Used to Determine Work Space Errors.....	148

Appendix

Table

A1.1	Conditions for which Solutions Have been Obtained - z axis.....	177
A1.2	Conditions for which Solutions Have been Obtained - x y axis.....	178

A1.3 Prediction Capabilities of Regression Equations (t>60 mins)... 194

A1.4 Prediction Capabilities of Regression Equations (0<t<60 mins). 194

A2.1 Location of Thermocouples on the x axis..... 195

A2.2 Location of Thermocouples on the y axis..... 196

A2.3 Location of Thermocouples on the z axis..... 197

LIST OF FIGURES

Figure		Page
1.1	Achievable Machining Accuracy [42]..	2
1.2	Machine Structure.....	8
1.3	The Six Degrees of Freedom [52].....	11
1.4	Definition of Squareness [41].....	13
1.5	A Typical Machine and its Vector Diagram [33].....	15
1.6	Diagram of Thermal Effects in Manufacturing and Metrology [41]....	20
2.1	Grid Point Cluster and And Notation [24].....	36
2.2	A Typical Eight Node Solid Brick Element.....	44
2.3	A Typical Plate Element.....	44
2.4	Deformation of x axis, T = 180 mins.	45
2.5	Deformation of y axis, T = 180 mins.	46
2.6	Deformation of z axis, T = 180 mins.	47
3.1	The Six Degrees of Freedom [52].....	50
3.2	Calculation of Roll.....	53
3.3	Calculation of Pitch.....	53
3.4	Errors, x axis.....	55
3.5	Errors, y axis.....	56
3.6	Errors, z axis.....	57

3.7 Error of Non-Orthogonality..... 61

3.8 Error of Drift..... 61

3.9 Volumetric Accuracy..... 63

3.10 Methodology for Calculation of Thermal Error Regression Functions..... 67

3.11 Check of Regression Equations, x axis..... 68

3.12 Check of Regression Equations, y axis, case 1..... 69

3.13 Check of Regression Equations, y axis, case 2..... 70

3.14 Check of Regression Equations, z axis..... 71

4.1 Body of Thin Plates..... 82

4.2 Boundary Conditions..... 82

4.3 Conventions on Cube..... 93

5.1 Experimental Setup..... 111

5.2 Calibration Of Machine Tool [45].... 120

5.3 Problem Of Drift..... 125

5.4 Hysteresis in Machine Tool Errors... 125

5.5 Standard Deviation of Position Error, x axis..... 127

5.6 Standard Deviation of Yaw Error, x axis..... 128

5.7 Prediction of Position Error, x axis..... 133

5.8 Prediction of Position Error, y axis..... 134

5.9 Prediction of Position Error, z axis..... 135

5.10 Prediction of Other Errors, x axis..... 138

5.11 Prediction of Other Errors, y axis..... 139

5.12 Prediction of Other Err rs, z axis..... 140

5.13 Volumetric Error, Actual vs Computed..... 143

5.14 Prediction by Numerical Methods..... 150

5.15 Measurement of Vertical Straightness, z axis..... 155

5.16 Vertical Straightness from Experiment, z axis..... 156

5.17 Vertical Straightness from Calculations, z axis..... 157

5.18 Calculation vs Experiment for Vertical Straightness, z axis, Test 1 used to get built in error.... 158

5.19 Calculation vs Experiment for Pitch, z axis (drift correction)..... 161

5.20 Calculation vs Experiment for Vertical Straightness, x axis (drift corrected)..... 162

5.21 Calculation vs Experiment for Pitch, x axis (drift corrected)..... 163

5.22 Calculation vs Experiment for Yaw, x axis (drift corrected)..... 164

5.23 Effect of Nonsymmetric Heat Sources. 166

Appendix

Figure

A1.1 Structure, x axis..... 179

A1.2 Structure, y axis..... 180

A1.3 Structure, z axis..... 181

A1.4 Location of Heat Sources..... 182

A1.5 Location of Temperature Points, x axis (Numerical)..... 183

A1.6 Location of Temperature Points, y axis (Numerical)..... 184

A1.7 Location of Temperature Points, z axis (Numerical)..... 185

A2.1 Location of Temperature Points, x axis (Experimental)..... 198

A2.2 Location of Temperature Points, y axis (Experimental)..... 199

A2.3 Location of Temperature Points, z axis (Experimental)..... 200

NOTATION

A_s	= Surface area
c_p	= Heat capacity
δ	= Delta function
ei(j)	= Rotational error in direction i for motion in direction j
E	= Modulus of Elasticity
g	= Acceleration due to gravity
h	= Heat convection coefficient
NU_l	= Nusselt number
K	= Thermal conductivity
L	= Length
Pr	= Prandtl number
P	= Perimeter
q_r	= Heat loss by radiation
q_b	= Heat loss by convection
Q	= Heat generation rate
R_{al}	= Rayleigh number
T	= Temperature
T_b	= Temperature at boundary
T_f	= Temperature of fluid
α, α_e	= Coefficient of thermal expansion

β	= Coefficient of volume expansion
t	= Time
∇	$= \frac{\partial}{\partial x} + \frac{\partial}{\partial y} + \frac{\partial}{\partial z}$
Δx	= Control volume in x direction
Δy	= Control volume in y direction
Δz	= Control volume in z direction
$\Delta i(j)$	= Position error in direction i for motion in direction j
ε	= Stefan Boltzmann's constant
σi	= Stress in the i 'th direction
ν	= Poisson's ratio

ABSTRACT

Thermal effects on the accuracy of numerically controlled machine tools are specially important in the context of unmanned manufacture or under conditions of precision metal cutting. Removal of the operator from the direct control of the metal cutting process has created problems in terms of maintaining accuracy. The objective of this research is to study thermal effects on the accuracy of numerically controlled machine tools.

The initial part of the research report is concerned with the analysis of a hypothetical machine. The thermal characteristics of this machine are studied. Numerical methods for evaluating the errors exhibited by the slides of the machine are proposed and the possibility of predicting thermally induced errors by the use of regression equations is investigated. A method for computing the workspace error is also presented.

Machine tools are generally made of box type structures. Based on analysis of box type structures, theoretical evidence for the prediction of machine tool errors is presented. The problem of heat flow in a box made of thin plates is studied and analytic solutions are derived.

The final part is concerned with the actual measurement of errors on a modern CNC machining center. Thermal influences on the errors is the main objective of the experimental work. Based on experimental evidence, it is shown that thermal effects on the accuracy of machine tools can be predicted by the use of simple regression equations. Finally, numerical methods are used to predict thermal influences on the errors of

machine tools. These methods make use of measured values of temperatures for prediction of errors.

Based on the evidence presented in this report, it is shown conclusively that thermal influences on the errors of machine tools are predictable. Techniques for determining thermal effects on machine tools at a design stage are also presented.

CHAPTER 1. INTRODUCTION

1.1 General

Precision engineering is concerned with the manufacture of artifacts to a high dimensional accuracy. Accuracy is defined as " A measure of the degree of conformance to recognized international or national standards" [41]. Broadly speaking, in terms of accuracy, machining can be split into three classes, normal, precision and ultra precision machining. Chronologically tolerances dealing with location were to tenths of a millimeter, then to hundreds of a millimeter. During World War 2, tolerances began to be expressed in micro meters. In the post war period, tolerances of fractions of a micro meter are common place. Figure 1.1 shows the development of achievable accuracy over the last 40 years and highlights what can be confidently expected by the end of the century [42].

The stringent requirements of precision engineering set grounds for development of better machines and manufacturing processes. Unfortunately high accuracy manufacture is coupled with high costs. Hence it is

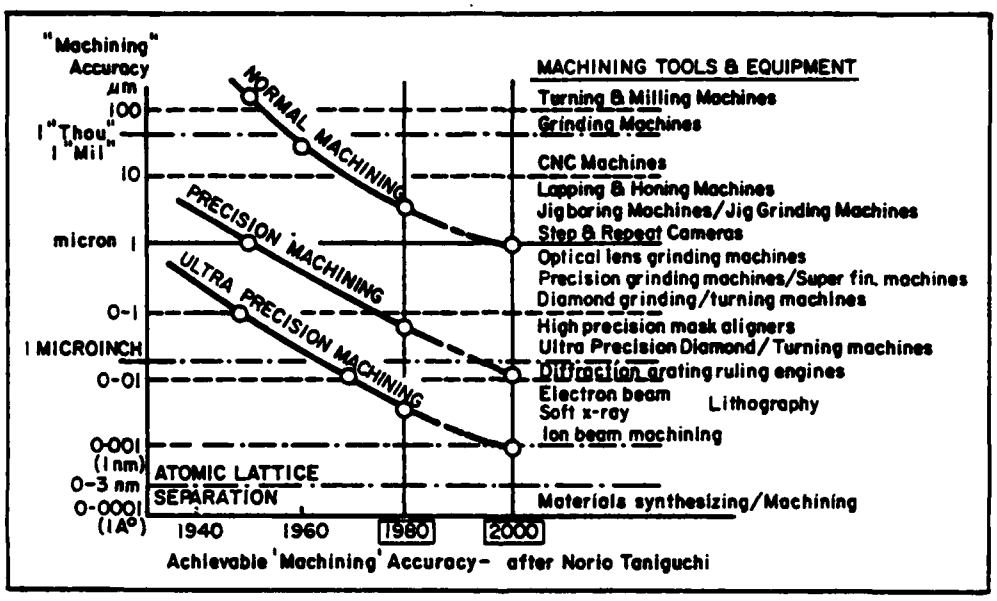

Fig. 1.1 Achievable Machining Accuracy [42]

beneficial to search for new ways in which working tolerances can be maintained when machining at high production rates. Several methods of measurement, production and control have emerged over the last decade to meet the above mentioned goals. A significant event in the last decade is the merging of electronic information sciences and production control techniques with metrology and manufacturing process into a single integrated system [25]. The advent of computers and sensors have in a sense allowed for the possibility of unmanned manufacture. While such a goal is desirable, it leaves much to be said in terms of maintaining accuracy. The intention of this research is to fill a gap between ultra precision engineering which is mastered, for example at Lawrence Livermore Laboratory, and conventional economic production technology practiced in the U.S. industry [46].

1.2 Problem Statement and Objectives

Accuracy of large machine tool structures is affected considerably by their dimensional stability under conditions of temperature and variable load distribution. Initial geometric accuracy of any machine is limited by the precision of the control equipment used during the different stages of the manufacturing process of the said machine. Deviations from accurate performance, are called as errors. Formally errors are

defined as " The difference between the actual response of a machine to a command issued according to the accepted protocol of that machine's operation and the response to that command anticipated by that protocol" [41]. Inaccuracy of a workpiece can be attributed to several factors. These factors are listed as follows [41]:

1. Geometric and kinematic errors of the machine tool.
2. Spindle errors of the machine tool.
3. Thermal effects on the machine tool and on the workpiece.
4. Static loading.
5. Dynamic loading.
6. Tool wear.
7. Errors due to work holding.

This thesis concentrates on thermal effects on the accuracy of numerically controlled machine tools. The reason for concentrating on thermal effects alone is because it is known that thermal effects account for about 60 - 70 percent of the total error in machine tools. In this context errors of interest are generally referred to as "quasistatic" machine tool errors. Quasistatic errors are those errors of relative position between tool and workpiece that are slowly varying in time and are related to the structure of the machine

tool itself. Quasistatic errors are generally classified as follows: those due to geometry and kinematics of the machine, those due to static and slowly varying forces such as the dead weight of the machine, workpiece weights and the like, and those due to thermally induced strains in the machine tool structure [41].

Improvement in accuracy of machine tools is achieved by two means, one approach is error avoidance. Error avoidance calls for elimination of the source of the error. This is mainly a design problem. Although much effort has been spent, error avoidance is by no means completely solved [25]. Typical methods of evaluating the effect of various types of influences on machine tool structures are finite difference methods and finite element methods. The second approach to error reduction is error compensation. Error compensation is defined in [41] as "A method of canceling the effect of the error by predicting it using a model built for the purpose". Software compensation is rapidly being accepted as a means of maintaining workpiece accuracy. Software compensation of errors, is generally achieved by storing error values in computer memory. The process of compensation is generally carried out by automatic correction of positioning commands or position feedback. The problem associated with this

approach is that it is not possible to hold infinite sets of error matrices in computer memory. It is due to this limitation there is need for the development of working models of the process whereby a source gives rise to an error.

In spite of the fact that much research has been done in the field of thermal analysis there are no simple expressions relating the effect of temperature on geometric and kinematic errors. In fact much confusion exists even on classification and measurement schemes for these errors [41] and it appears that much of the work done in the field of thermal effects on machine tools is highly repetitive. Representation and correction of errors has been carried out [13,30,23]. However, the methods used generally store errors in the form of a matrix (look up table) and those that attempt on line compensation, correct a single error (eg. spindle growth [23]). Hence it is felt that a detailed analysis of thermal effects on machine tool structures is required. The present study will attempt to provide cause and effect relationships for each of the quasistatic errors exhibited by the slides of a machine tool. While the study will concentrate on a single machine, sufficient generality will be provided so that the methods of analysis and experimental verification can be applied to any machine tool (of the same class at

least). The machine under consideration has 3 linear axes of motion and a rotary axis, Figure 1.2. The axis of motion are in the x, y and z directions. The directions are as shown in the Figure 1.2. For the rest of the thesis, part of the structure that supports motion in the x direction is referred to x axis, similarly for y axis and z axis. Attention will be focussed mainly on the linear axes. In all 18 error terms will be studied six for each axis. The idea is to see if these errors can be modeled by simple equations. The equations so derived will form the basis for correction of thermally induced errors by the use of sensors, located at a few strategic points.

The main objective of this thesis is to determine if thermal effects on the quasistatic errors of machine tools can be predicted by monitoring the temperature of a few points on the machine tool. This objective is primary and is essential for software correction of numerically controlled machine tools. Associated with this objective are problems of representation and prediction of error as a function of temperature and space variables. The other objective is to use numerical methods for the evaluation of thermal effects on machine tools at a design stage.

The thesis is broadly split into three parts. Chapter 1 provides a general introduction to the whole

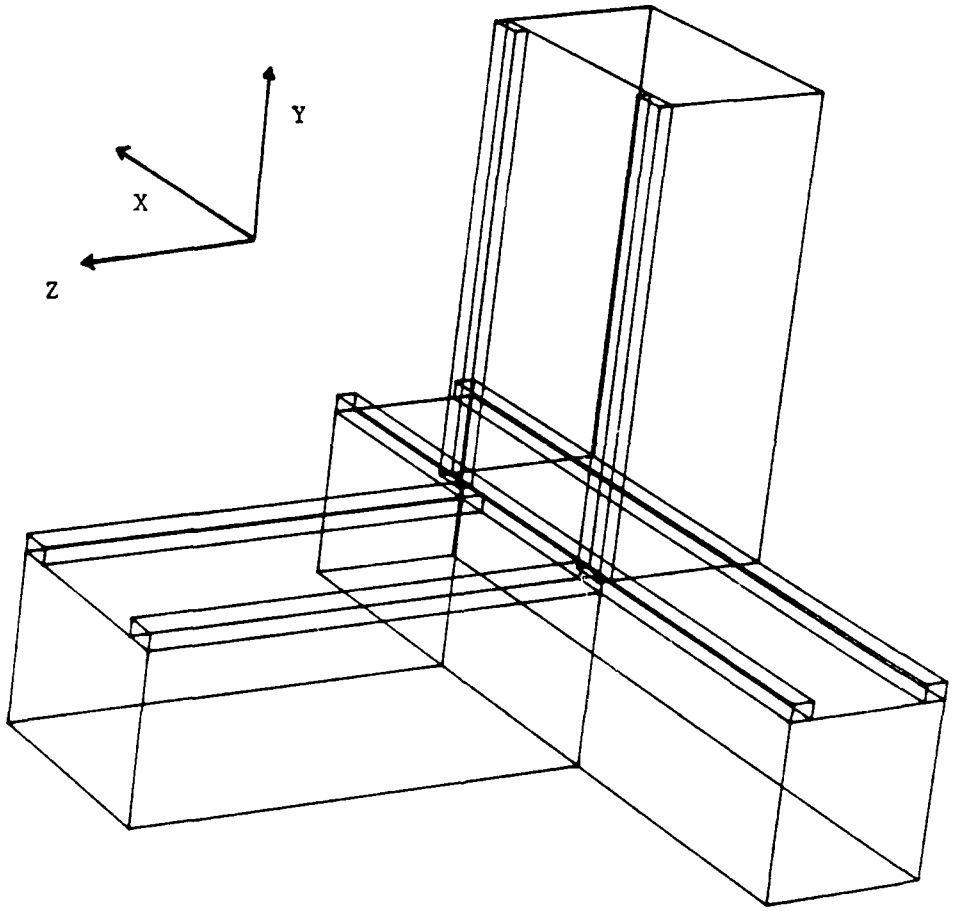

Fig. 1.2 Machine Structure

area and current status of research is discussed. In Chapters 2 and 3 known numerical methods for evaluation of thermal effects on machine tool structures are discussed. Results as evaluated for a hypothetical structure are presented and work space error evaluation techniques are derived. Also it is shown in Chapter 3 that errors of machine tools can be predicted by the use of simple regression equations. Chapter 4 addresses analytic questions and it is shown here that the use of regression equations is valid for prediction of errors. Chapter 4 also shows analytic solutions of thermal profiles and displacements for simple cases of cubes made of thin plates. However the solutions obtained are very restrictive. Chapter 5 is concerned with experimental evaluation of machine tool errors. In Chapter 5, it is conclusively shown that thermal influences on machine tool structures can be predicted by use of simple equations. Experimentally measured errors are presented in the appendices.

1.3 Literature Review

The following section describes the various errors of a machine tool. Thermal effects on error terms will be discussed, and status of current research in these topics will be presented in the next section.

1.3.1 Quasistatic Errors of a Machine Tool

All machine tools are composed of moving carriages, tables or other elements whose purpose is to position the workpiece with respect to the tool for metal removal. It is customary (as far as possible) to design each positioning element such that it behaves as a rigid body with five of its six degrees of freedom eliminated, then to drive the element in the remaining direction and measure its motion in that direction as accurately as necessary for that application. Normally the desired motion is pure linear or rotary. Exceptions to this practice are few [41]. A typical linear carriage is shown in Figure 1.3. The following assumptions are made:

1. It is designed for linear motion.
2. It is a rigid body.
3. Has a device for measuring position.

On such a carriage, one can measure at least six error terms. Three of these are translational (linear) and three are rotational. The rotational terms are generally called pitch, roll and yaw. These are defined with respect to the direction of motion. Linear errors are more difficult to define, the reason being due to presence of angular motion. Of the linear errors, it is customary to measure one error as the difference between the actual carriage position in the motion direction and

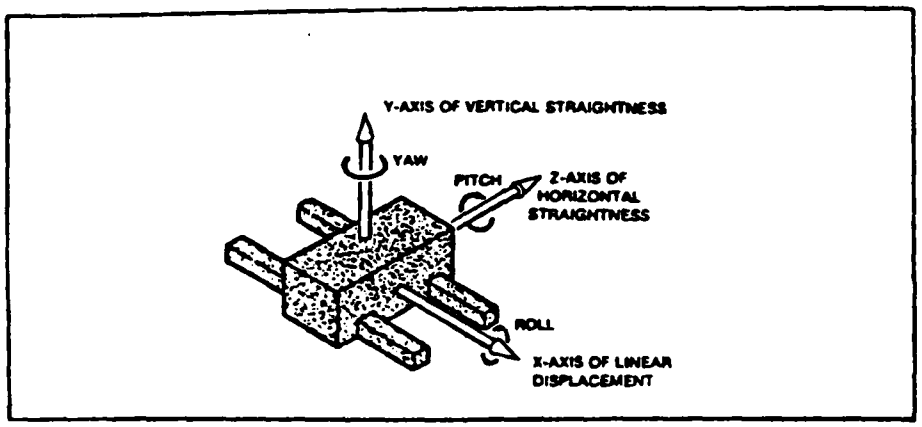

Fig. 1.3 The Six Degrees of Freedom [52]

the scale reading and two errors of motion along machine axes perpendicular to this direction. The first error is called a "positioning error", and the other two as "straightness of motion" [41]. It is desired to measure positioning errors as close to the scale as is feasible to reduce Abbe offset errors. The Abbe principle is defined as : " The displacement measuring system should be in line with the functional point whose displacement is to be measured. If this is not possible either the slideways that transfer the displacement must be free of angular motion or angular motion data must be used to calculate the consequence of the offset " [32]. Besides translational and angular errors, errors of non-orthogonality present themselves. These are shown in Figure 1.4. Non-orthogonality errors are generally defined as squareness errors.

Having described errors of interest, it is desirable to present statistical issues for the specification of measured errors. Much effort has been spent towards this end [11,12,41]. Two of the more important documents that specify the positioning accuracy of machine tools are published by VDI in Germany and NMTBA in America [12]. NMTBA defines spread of machine tool error as the standard deviation of the error in reaching a particular point.

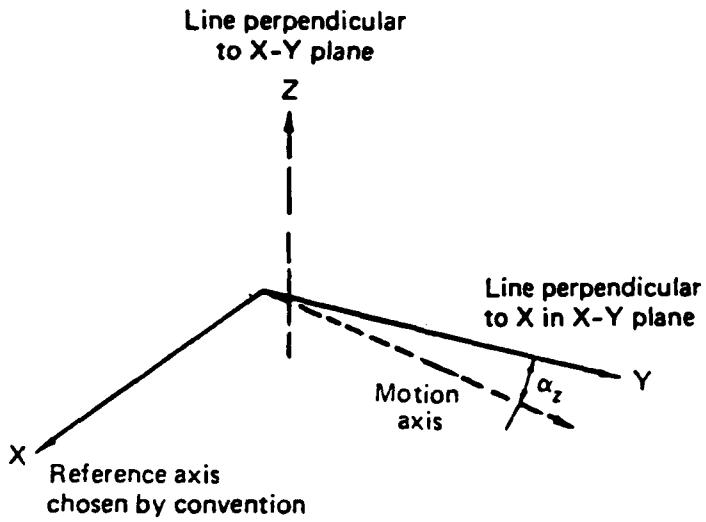

In X-Y Plane

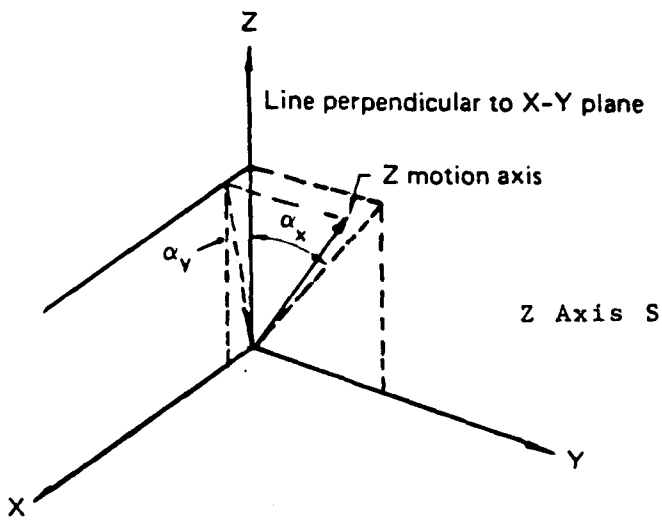

Z Axis Squareness

Fig. 1.4 Definition of Squareness [41]

VDI defines spread as follows [11] :

$$\sigma_i = R_i/d \tag{1.1}$$

where

R_i = range of sample

d = correction factor

Correction factors are provided in tabular form by the VDI [12]. All the papers [11,12,37,40] identify two groups of errors: a) Systematic errors and b) Statistical errors. Systematic errors are those that are reproducible while statistical errors are those that are not. In [40], the effect of hysteresis is also shown. The concept of an error template is proposed in [40,37]. The error template defines the acceptable range for an error graph.

The problem discussed in [17,18,33,40] deals with evaluation of the combined error in the work space of a given machine. In [33], the analysis is based on vector diagrams. Every machine can be described by vector diagrams. A typical diagram is shown in Figure 1.5. Using vectors to represent each axis, it is shown that the error vector will be of the form

$$Z + EZ + \begin{vmatrix} EAZ \\ EBZ \\ ECZ \end{vmatrix} (X+EX) + \begin{vmatrix} EAX \\ EBX \\ ECX \end{vmatrix} \begin{vmatrix} EAZ \\ EBZ \\ ECZ \end{vmatrix} (W+EW) =$$

$$Y + EY + \begin{vmatrix} EAY \\ EBY \\ ECY \end{vmatrix} T \tag{1.2}$$

where A, B, C are rotational axes, EAZ is the rotation

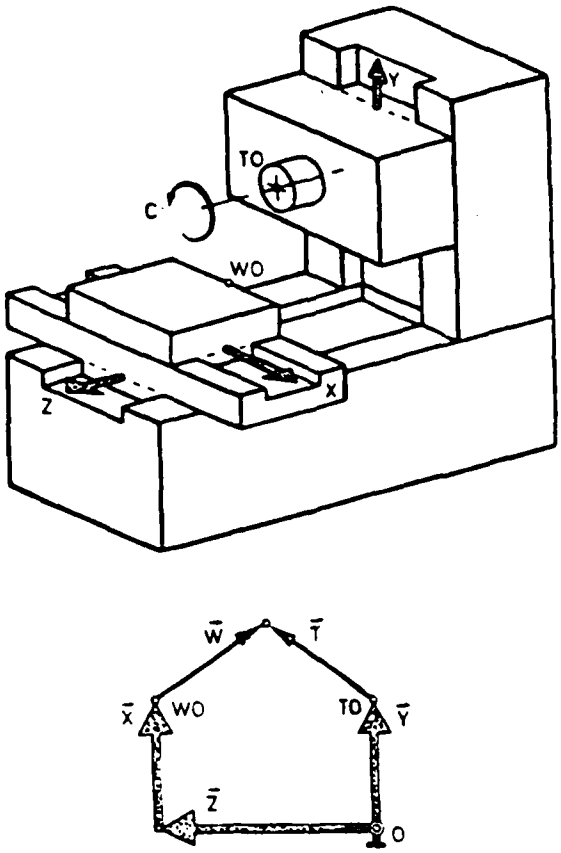

Fig. 1.5 A Typical Machine and its Vector Diagram [33]

of Z axis along A etc. The workpiece error is represented by EW. In equation (1.2), the terms X, Y, Z are vectors along the x, y and z directions.

In [26], an analytical method to evaluate the workpiece errors is presented. This study is based on the use of mathematical properties of infinitely small linear transformations. To determine lathe accuracy, dimensional chain analysis is used. A coordinate system is assigned to every link of the chain which describes the motion of the element with respect to the previous link. Using these transformations, errors are combined. The final error term is defined by the following relationship:

$$\delta_{r0} = (E_0 r_0 + \delta_0) + \sum_{i=0}^{i=k} A_{01} A_{12} \ldots A_{i-1,i} (E_i r_i + \delta_i) \quad (1.3)$$

where

$$E_i = \begin{vmatrix} 0 & -\lambda_i & \beta_i \\ \lambda_i & 0 & -\alpha_i \\ -\beta_i & \alpha_i & 0 \end{vmatrix}$$

$$\delta_i = \begin{vmatrix} \delta_{xi} \\ \delta_{yi} \\ \delta_{zi} \end{vmatrix} \quad (1.4)$$

δ_i is the matrix of displacements, r_i is the vector of tool point in the i th coordinate system, $A_{i-1,i}$ is transformation between the i-1 th and the i th system,

α_i, λ_i and β_i are angular errors. In [17], a comparative analysis of machining error components is done. The authors list out machine error components as belonging to one of the following two classes: a) errors of the NC system and b) errors of the MFTW system. (MTFW Machine tool, fixture, tool, workpiece). These errors are combined to give the overall effective error. A similar analysis is done by Donaldson in [41]. He proposes a system of error budget. This concept deals with the determination of the complete set of error sources in a machine tool, finding the resultant displacement error, dividing them into directions, combining errors in the same direction and finding the final workpiece error in each direction using the resultant displacement error and the workpiece geometry.

A major effort has been launched at NBS [13] to explain the problem of three dimensional metrology. Three different techniques are used for understanding machine behavior. These are: a) rigid body kinematics b) temporal modeling and production sampling and c) techniques of multiple redundancy. Rigid body kinematics calls for choosing minimum number of ideal reference frames (coordinate systems) necessary to characterize a machine. Matrix transformations are used to relate coordinates in these chosen frames. Three coordinate systems are chosen: the space system, table

system and the object system. Using error transformations, relations are obtained for expressing errors in the object system. Temporal modeling deals with use of statistical means to eliminate drift and temporal variations in measured values. The technique calls for using a single point as a gauge point and k other points as check points. Using the gauge point as one which is employed in every measured cycle, drift is determined. The drift so obtained is used to correct all other check points. Multiple redundancy method is used to eliminate non-orthogonality and scale errors in measurement. The result of this effort is that the general error term is a function of machine position, and of such variables as loading and temperature. This is confirmed with experimental work carried out at NBS. They also propose methods for computer compensation of errors by storing the actual error values in matrix form. The study, however, has been carried out on a measuring machine. Measuring machines as compared with NC machine tools work in a better environment and are generally not subject to forces experienced by machine tools. This will be a fundamental difference between the present research effort and the one carried out at NBS.

In [18], an analysis of the displacement, planar and volumetric errors of multi-axis machines is

presented. The combined effects of all errors in the measuring system and errors in geometric features such as linearity of motions and orthogonality of axes of motion is considered. Using measured values of errors, the authors show that it is possible to evaluate volumetric error in the work space of a machine tool.

1.3.2 Thermal Effects

Thermally induced errors in machine tools compare in size and type to those resulting from tool wear and mechanical deformations [8,20,41]. Awareness of thermal effects as an error source requiring attention in the basic design of machine tools is typically increased each time that the human operator is removed from the direct control of the process.

Thermal effects in manufacturing and metrology can be categorized as in Figure 1.6 [41]. Speaking broadly, thermally induced errors are caused by three types of sources: temperature of the environment, external heat sources and internal heat sources. External heat sources are pumps, motors, cutting forces and chips produced during machining operation. Internal heat sources are bearings, gears, clutches, slideways and hydraulic oil. Heat dissipation from these sources into the structure and workpiece result in thermal gradients with consequent structural and workpiece deformations.

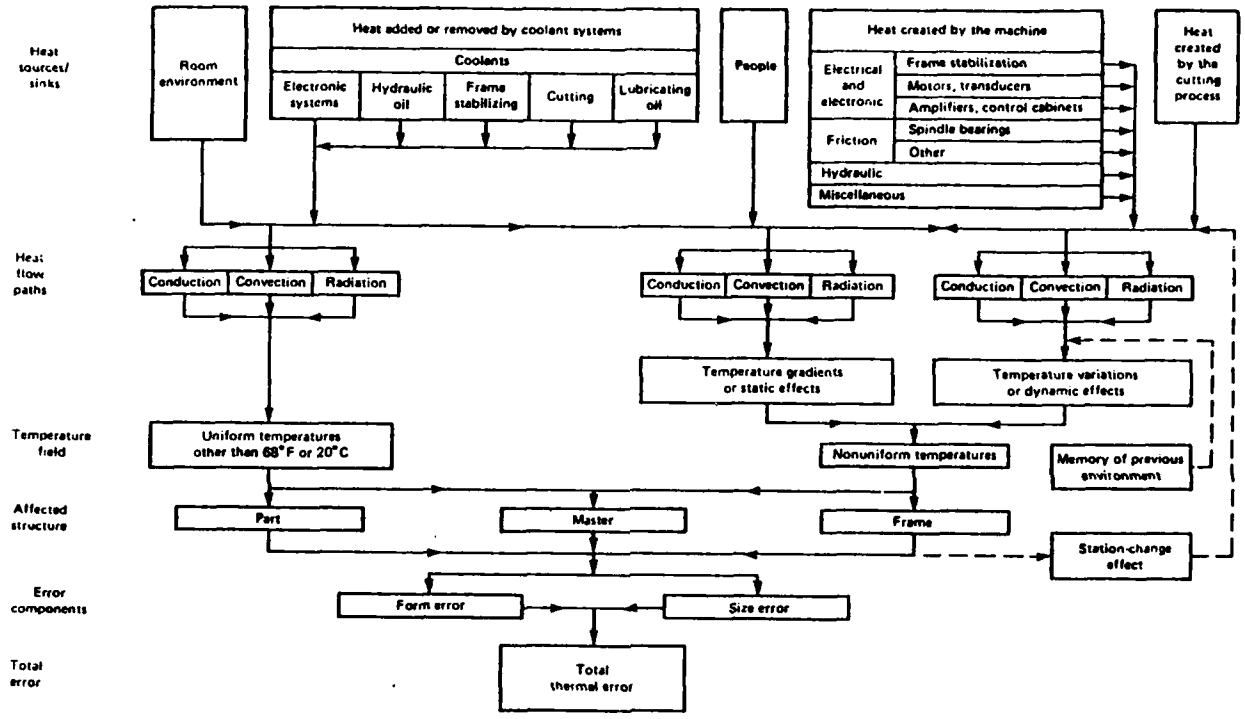

Fig. 1.6 Diagram of Thermal Effects in Manufacturing and Metrology [41]

Generated heat also influences the measuring system of the machine, hence contributing to positioning error.

The theoretical basis for the evaluation of the deformation behavior of solids due to thermal loads is generally known [7,10,22,36], but, mathematical difficulties in treating the problem of thermo-elasticity are considerable. Hence only a few rigorous solutions have been obtained [7,22]. Due to such complications, numerical techniques are generally used.

Several studies have been carried out in the area of thermal deformations [16,19,20,21,23,27,28,29,31]. In these studies, the finite element technique is generally used to evaluate deformation characteristics of machine tools. Then experimental data is used to evaluate the accuracy of predictions by numerical methods. However it should be noted that due to inadequacy of information on heat sources and transfer of heat at joints, computations to determine thermal deformation behavior of machine tools provide no more than trend predictions.

Spur and De Haas study the effect of temperature on machine tools [34]. The machine used in [34] is driven by a lead screw, and is of the open loop system type. The study done consists of experimental findings. The authors propose methods for improving the thermal

stability of machine tool structures. The methods proposed include insulating the measurement system, which reduced the original error by 90 percent. Cooling of the machine tool is also experimented with. Heat is removed by splashing oil on the inner surfaces of the machine tool. This along with cooling of clutches by splashing oil causes substantial reductions in the deformation behavior. One of the experiments is concerned with transfer of heat by hot chips. Experimental work proved that heat transfer is not affected by the temperature of chips, their form, or by the manner of pouring (all at once or continuously). The authors propose two methods for reducing the influence of heat input from chips. a) Removal of chips (but this would call for auxiliary energy) and b) Insulation of the machine tool. Insulation of the machine tool by a cool layer of chips shows a reduction in heat transfer rate with increase in thickness of the layer of cool chips.

A recent study done in Japan [28] shows innovative methods for improving the accuracy of machining centers by software correction. Geometric error is measured in advance by using a standard master part fixed on the table. Relative displacement between workpiece and spindle caused by thermal deformations is evaluated by a simple finite element model of the machine. The finite

element model is programmed on a dedicated minicomputer and uses on line temperature measurements. NC command pulses are modified by the computer to account for the geometric error and deformation of the machine. Errors in three dimensions cannot be measured accurately, hence they are measured in a single plane. Once these planar errors are measured, equations of the following form are fitted to measured data.

$$\delta x = c1x + c2y + c3x^2 + c4xy + c5y^2$$
$$\delta y = c6x + c7y + c8x^2 + c9xy + c10y^2 \qquad (1.5)$$

The coefficients c1 .. c10 are evaluated by the use of least square estimators. A method of evaluating deformations due to thermal effects by finite element method is also formulated. An equation of the following form was used for the on line evaluation of thermal deformations:

$$(\delta x)^i = [\ M\ ](f)^j + [\ N\ ](\theta)^k \qquad (1.6)$$

where

(δx) = displacement vector

(f) = force vector

(θ) = temperature at heat source.

$[M]$ = inverse of force stiffness vector, $[K]^{-1}$.

$[N]$ = $[\ K\ ]\ [\ F\ ]$

$[F]$ = Force conversion Matrix

In equation (1.6), i denotes the node at which

displacement is required, for nodal force at j and heat at k, and [K] is the stiffness matrix. It is shown by experimental methods that the technique causes a reduction in error. In [27], a machine tool structural analysis program has been developed. The program is capable of analyzing the static, thermal and dynamic behavior of machine tool structures. Data input is designed so that analysis can be carried out by providing structural information as a combination of plate elements, modules and units. The program evaluates static, dynamic and thermal rigidity of a given structure.

In [23], displacement of the spindle is correlated to temperature of a single point on the spindle head. The correlation is linear and the analysis shows that the response of loss in accuracy due to heat generation rate follows a first order time lag. However there is no time lag between temperature raise and displacements. It should be mentioned that this is one of the few efforts to correlate thermal displacements to temperature of a specific point on the machine tool structure. The report also provides interesting information on software compensation of thermally induced error.

In [16,29,38], principles and examples of calculation of thermal deformations by finite element

technique are provided. The calculation sequence is divided into two complexes, calculation of temperature distribution and calculation of thermally caused deformations. These two calculations are independent of each other except that calculation of the thermal problem must precede calculation of the deformation problem [38]. A variational principle for evaluation of the temperature distribution is presented in [38].

$$(\Phi^e) = [\ H^e\ ]^{-1}(Q^e) \tag{1.7}$$

where

(Φ^e) = temperature distribution

$[\ H^e\ ]$ = temperature stiffness matrix

(Q^e) = matrix of heat input or heat loss.

Similarly equations are derived for deformation of a bar

$$(u^e) = [\ K^e\ ]^{-1}\left|(F^e)+(F_v^e)\right| \tag{1.8}$$

where

(u^e) = deformation

$[\ K^e\ ]$ = stiffness matrix

(F^e) = matrix of external forces.

(F_v^e) = matrix of thermal forces.

The analysis is based on one dimensional conditions, however it can be extended to multi-dimensional cases. Calculation of thermal deformations and measured values of temperature are plotted against duration of heat

generation. The authors point out that in spite of satisfactory correlation between measurement and calculation, the use of calculation sequences to determine thermally induced errors is suspect. The reason for this suspicion is due to lack of information on thermal and mechanical boundary conditions.

In [29], a method for calculating the deformation of structures due to thermal loads is presented. The development here is two dimensional. The machine is modeled as a thin walled structure, and results of the analysis are compared with experimental work. The other interesting aspect of the paper is the development of a method for evaluating the intensity of heat sources. The method is one of matrix partitioning. It calls for partitioning the thermal relation matrix into two parts, nodes that are connected with heat sources and nodes that are not. The authors also propose methods for evaluating both the intensity of heat sources as well as the temperature of nodes not associated with heat sources, based on measured values of temperatures of nodes connected with heat sources.

Attempts towards clarification of methods used for curbing thermal deformation as well as methods used for control of thermal deformation of machine tools are presented in [16,28]. In [16], computer methods are used to evaluate the effect of column and guide

structures, cooling units and types of spindle bearings on the thermal behavior of a machine tool. The study restricts itself to horizontal type machining centers. Three types of structures are considered, single column, partially symmetric double column, and a fully symmetric double column. All models have about the same height and about the same stroke. Spindle bearings and hydraulic pumps are taken to be the two main generators of heat. Design parameters considered are type of guide: sliding guide (whole surface is in contact) and roller guide (contact is restricted to a small portion of the guide-way). Three types of cooling devices are considered: no cooling, fan cooler and refrigeration cooler. Finite element analysis of the three different structures is carried out and the differences in performances noted. Use of a refrigerating cooler has dramatic effects on the deflection pattern. Under ideal conditions (cooling capacity of cooler is equal to heat generating rate of the machine) a small temperature elevation is noted. This type of refrigeration is not sufficient for control of thermal influences, hence the authors recommend use of an excess capacity refrigerator to maintain the temperature of the circulating oil to within 1 degree Celsius.

Attempts to control thermal deformations are discussed in [28, 29]. In both papers, methods are

identified for control of thermal deformation through the use of heaters. The problem is modeled as a time optimization one. The general approach is to use heaters to heat up the structure to steady state temperatures and maintain these temperatures over time. Experimental results are compared to theoretical solutions. In this context, the efforts of J.B. Bryan at Lawrence Livermore Labs [41] should be mentioned. Thermal stability is achieved by immersing the whole machine in a bath of oil. It appears that a brute force approach as in [41] will succeed.

R.L. Murthy has analyzed the thermal deformation of a semi-automatic chucking machine [21]. Heat sources considered are: power pack, motor, pump, relief valve, and friction in bearings. He evaluates the temperature along the spindle shaft as:

$$T = 12e^{4x} + 52e^{-4x} \tag{1.9}$$

where T is the temperature and x is the distance from rear bearing. Using a one dimensional thermal diffusion equation, thermal shift of the spindle is calculated.

Attempts to correct the error induced due to thermal expansion of the tool are discussed in [35,30]. Both methods rely on the assumption that thermal expansion of a tool can be expressed as function of heat generation rate and time. Software correction indicates

that errors can be reduced from 80 micrometers to 15 micrometers.

This last section is devoted to current research in thermal contact resistance as applied to machine tool structures. In the past few years much work has been done in this field typically by M.H. Attia and L.Kops [1,2,3,4,5,6]. Analysis of the process of heat transfer across joints in machine tool structures reveals their non-linear thermoelastic behavior. Nonlinear behavior is exhibited due to two causes: a) material nonlinearity due to the fact that surface asperities take a nonlinear load dependent form, b) nonlinearity resulting from the thermoelastic behavior of contacting elements, which experience a closed loop interaction between the thermal field and thermal deformation of structural elements in contact. This interaction causes changes in contact pressure and the change is reflected in redistribution of thermal resistance. Hence thermal contact resistance is to be defined as a distribution, not a single value [6]. In their work Attia and Kops include the time dependent behavior of a joint in the analysis of machine tool structures. This theory is a departure from existing methods in which thermal contact resistance is measured as a single average value, not representing realistically the conditions of heat transfer across machine tool joints. In [6], the theory is verified by

photoelastic models. Using the developed theory, deformation of structures is studied in [2]. The difference between results obtained from a model with thermoelastic interactions and a model without thermoelastic interactions is presented in [2]. The analysis however is restricted to two-dimensional cases. The formula for equivalent thermal conductivity is given as follows:

$$k_c = \frac{Al}{a}\left|\frac{\sigma}{k\tan\theta}\left(\frac{H_B}{p_c}\right)+4\frac{b}{k}\sum_{n=1}^{n=inf}\frac{1}{n}\right|^{-1} * \left|\left|\int_0^1 \frac{p_c}{p_{av}} * \cos(n\pi\bar{y})d\bar{y}\right|^2 * p_c * \sum_{i=1}^{N}\frac{1}{p_{ci}}\right|^{-1} \qquad (1.10)$$

In Equation (1.10), the terms are defined as follows

a = crossectional area of contact element.

A = nominal interface area

b = length of contact

H_B = hardness

k = thermal conductivity.

k_c = equivalent thermal cond. of contact element.

l = length of contact element

N = number of contact elements along joint.

p_c = local contact pressure.

p_{av} = average contact presure.

$\bar{y}$ = y/b dimensionless variable.

σ = standard deviation of contacting surface.

$\tan\theta$ = mean abs. slope of surface irregularities.

The second term may be neglected without causing much error. This leads to the following simplification

$$k_c = \left| \frac{A}{a} \frac{1}{} * \frac{k\tan\theta}{H_B \sigma} \right| P_c \qquad (1.11)$$

For the same problem, the authors show the equivalent modulus of elasticity to be E_c

$$E_c = \frac{1}{C} \left| \frac{A}{a} \right| p_c^{1-m} \qquad (1.12)$$

In equation (1.12), C and m are constants. Using the above formulas, the thermal problem and elasticity problem are solved. The solutions are compared and significant differences are shown. One drawback appears to be that the solutions of the thermal and elastic equations for machine tool structures are not compared with experimental results.

Although much work has been done in the area of thermal effects on accuracy of machine tools, it has not yet been established that thermally induced errors can be predicted by monitoring the temperature of a few points on the machine tool structure. This problem and associated issues will be discussed in the next few chapters of the thesis.

CHAPTER 2. TEMPERATURE AND ELASTIC DEFORMATION CALCULATIONS

2.1 General

Analysis of thermal behaviour is possible by two methods, numerical and experimental. Chapter 2 is concerned with the usage of known numerical methods for the evaluation of thermally induced deformations. The structure chosen is a hypothetical one. It resembles the one shown in Figure 1.2. Details of the structure are shown in Appendix 1, Figures A1.1, A1.2 and A1.3. For the purpose of calculations, the z axis (part of the structure that supports motion in the z direction) of the machine is considered independent of the x and y axes. The reason for doing this is because the z axis is not an integral part of the machine. The x and y axes are modeled together. The analysis is three dimensional. The reason for resorting to three dimensional analysis is because heat sources are not located symmetrically on the machine. Location of heat sources is shown in Appendix 1, Figure A1.4.

Calculation of thermal behavior of a structure can be divided into two complexes: calculation of the temperature distribution and calculation of thermally caused deformation. These two complexes are independent of each other, except that the temperature calculation must precede the deformation calculation [38]. The mathematical relationship is formulated in equations of heat transfer and elasticity. The precise analytical solution of these differential equations in technical applications is usually impossible, because of complicated boundary conditions and complex shapes. So approximations have to be used. The approximations used are finite difference equations for the heat transfer problem and the finite element technique for the elastic deformation problem. For the purpose of calculations, the structure is assumed to be made of an isotropic homogeneous material.

2.2 Heat Transfer Problem

The heat transfer equation to be solved is as follows [15] :

$$\partial^2 T/\partial x^2 + \partial^2 T/\partial y^2 + \partial^2 T/\partial z^2 + Q/K = (\rho c_p/K) * \partial T/\partial t \qquad (2.1)$$

Equation (2.1) governs the conduction of heat in a solid. Solution of Equation (2.1) is carried out by subdividing the calculation domain into a number of

smaller subdomains or elements and evaluating the value of the dependent variable within each element. In this manner the continuum calculation domain is discretized. It is this systematic discretization of space and dependent variables that makes it possible to replace the governing differential equations with simple algebraic equations, which can be solved with relative ease. Solution of Equation (2.1) is desired over time to define the thermal profile of the machine tool. Since time is a one-way coordinate, the solution is obtained by marching in time from a given initial distribution of temperature. The task is: Given a set of temperatures at time t(i) it is desired to obtain the value of temperatures at time t(i+1) and so on. Discretization of the heat transfer Equation (2.1) can lead to several forms of equations:

1. The Implicit form
2. The Explicit form
3. The Crank-Nicolson form

The implicit form is used in this thesis because of limitations on time step size in the explicit form and of possible errors in the assumption of linear variation of temperature over the time step in the Crank Nicolson solution [24].

Applying the principle of discretization to Equation (2.1), it can be represented as follows [24]:

$$a_p T_p = a_e T_e + a_w T_w + a_n T_n + a_s T_s + a_t T_t + a_b T_b + B \quad (2.2)$$

Where each of the terms is defined as follows.

$$a_e = K_e \ \Delta y \ \Delta z / \partial x_e \quad (2.3)$$

$$a_w = K_w \ \Delta y \ \Delta z / \partial x_w$$

$$a_n = K_n \ \Delta z \ \Delta x / \partial y_n$$

$$a_s = K_s \ \Delta z \ \Delta x / \partial y_s$$

$$a_t = K_t \ \Delta x \ \Delta y / \partial z_t$$

$$a_b = K_b \ \Delta x \ \Delta y / \partial z_b$$

$$a^0_p = \rho c_p \ \Delta x \ \Delta y \ \Delta z / \Delta(t)$$

$$B = Q \ \Delta x \ \Delta y \ \Delta z + a^0_p T^0_p$$

$$a_p = a_e + a_w + a_n + a_s + a_t + a_b + a^0_p - Q \Delta x \ \Delta y \ \Delta z$$

Referring to Figure 2.1, the meaning of this discretized equation is readily clear. The Equation (2.2) defines the value of temperature at any point in a discretization grid as the linear sum of the temperatures of it's neighboring points. Calculation of steady state condition is possible by setting $\Delta(t) = \infty$, in Equation (2.3). Solution of the above discretized equation is obtained by an iterative method, for large problems. Sparseness of matrix and lack of tri-diagonal matrix structure prevent easy matrix inversion, hence iterative methods have to be used. Here the overrelaxation scheme is used and convergence of solution is checked for, at each iteration.

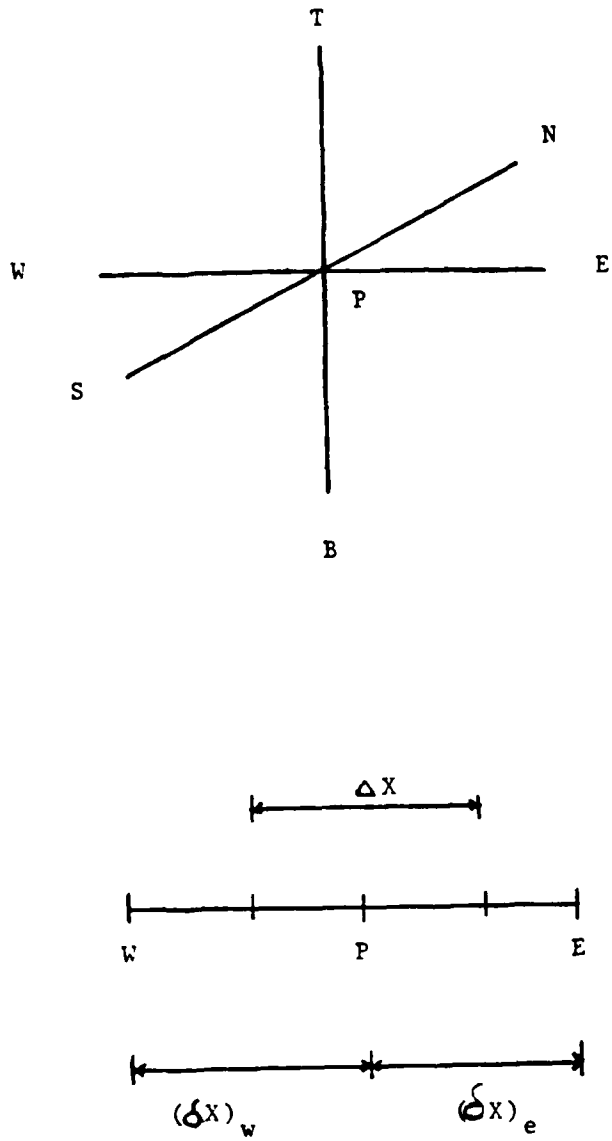

Fig. 2.1 Grid Point Cluster And Notation [24]

2.3 Boundary Conditions

Evaluation of boundary conditions is the most difficult task in the determination of temperature profile of any machine. While a wide variety of boundary conditions are available for modeling of heat transfer from structures, dynamic conditions present on the surface prevent exact modeling. Inclusion of boundary conditions in the numerical solution do not present any great difficulty. Three types of boundary conditions are used for analysis:

1. Natural boundary condition (Heat transfer to atmosphere)
2. Heat transfer in closed cavities.
3. Insulated boundary conditions.

Natural boundary conditions are used for the surface of the structure. The form of the boundary condition is as follows [15]

$$q_b = h(T_f - T_b) \tag{2.4}$$

This boundary condition is incorporated into the heat diffusion equation as follows [24] :

$$a_b T_b = a_i T_i + b \tag{2.5}$$

where

$$a_i = \frac{K_i}{\partial x_i} \tag{2.6}$$

$$b = hT_f \tag{2.7}$$

The term a_b is written out as [24]:

$$a_b = a_i + h \tag{2.8}$$

Inclusion of insulated boundary conditions (on the base of the machine) is easily achieved by setting h to zero. Boundary conditions within closed cavities are more difficult to handle, because it is impossible to make any realistic estimate of temperature distribution within a cavity. Hence for the problem on hand, internal cavity temperature is assumed to be the average of the inner wall temperatures. The cavity temperature is calculated from time step to time step. Also, exact evaluation of heat transfer coefficient within a cavity is not possible. It is expected that with rotating parts, some form of turbulent convection will be taking place.

2.4 Evaluation of Heat Transfer Coefficient

Heat transfer coefficients are evaluated for each of the plates (horizontal and vertical) on the machine using the following relationships. For vertical plates, it is known that [15]:

$$R_{al} = \frac{g\beta(T_b - T_f)L^3}{\alpha\ \upsilon} \tag{2.9}$$

In Equation (2.9), the terms are as follows:

α = thermal diffusivity

υ = kinematic viscosity

The Nusselt number NU_1 is evaluated as [15]:

$$NU_1 = \left| 0.825 + \frac{0.387 R_{a1}^{1/6}}{\left| 1 + 0.492/Pr^{9/16} \right|^{8/27}} \right|^2$$

$$h = NU_1 K/L \tag{2.10}$$

For Horizontal Plates [15]:

$$L = A_s/P \tag{2.11}$$

$$NU_1 = 0.27\ Ra_1^{1/4} \tag{2.12}$$

Now calculation of h is as before with Equation (2.10).

For Cavities [15]:

$$Ra_1 = \frac{g\beta(T_b - T_f)L^3}{\alpha\ \upsilon} \tag{2.13}$$

Evaluation of Nusselt number is as follows [15]:

$$NU_1 = 0.18\left(Pr\frac{Ra_1}{0.2+Pr}\right)^{0.29} \tag{2.14}$$

Evaluation of overall heat transfer coefficient for the machine is done by averaging each of the above values based on the respective contribution to heat loss (depending on the surface area). Radiation effects are also considered. Radiation heat loss is as follows [15]:

$$q_r = \varepsilon\sigma(T_b^4 - T_f^4) \tag{2.15}$$

2.5 Some Numerical Results

Following are some of the numerical results obtained as a result of the finite difference calculations for the z axis. Room temperature is assumed to be at zero degrees Celsius. Table 2.1 indicates the difference in solution of temperature field by using a very large grid (1224 nodes) as compared to a smaller grid (648 nodes). Table 2.2 indicates the difference in solution with a time step of 15 minutes as compared with a time step of 5 minutes. The temperature is given in degrees Celsius. Tables 2.1 and 2.2 present the temperature in Celsius at the source point. It is seen that the temperature does not vary by more than a degree Celsius for both cases. So all solutions have been carried out with a time step size of 15 minutes and 648 nodes. Similar analysis on the x y axis indicates that a time step of 15 minutes and 1652 nodes is sufficient.

2.6 The Elastic Problem

One of the causes of strains in a body is its non-uniform heating. With rising temperature, the elements of a body expand. Such expansion generally cannot proceed freely in a continuous body. Hence thermally induced stresses and strains result. Deformation of a body under non-uniform heating is typically an elastic

Table 2.1 Comparison of Number of Nodes

no of nodes	Temp at Source
648	7.4
1224	7.0

Table 2.2 Comparison of Time Step

Time step(min)	Temp at source
15	7.4
5	8.5

problem. Laws of elasticity being linear allow for easy solution of the deformation characteristics of the structure. Laws governing deformation of any structure follow from Hooke's law. Theory of elasticity defines these laws as follows [36]:

$$\begin{aligned} \varepsilon_x &= \frac{1}{E}(\sigma_x - \nu(\sigma_y + \sigma_z)) + \alpha T \\ \varepsilon_y &= \frac{1}{E}(\sigma_y - \nu(\sigma_x + \sigma_z)) + \alpha T \\ \varepsilon_z &= \frac{1}{E}(\sigma_z - \nu(\sigma_x + \sigma_y)) + \alpha T \end{aligned} \tag{2.16}$$

Associated with stress strain relations given above, are equations of equilibrium, equations of compatibility and boundary conditions that have to be satisfied. Reference [7,36,22] provide a good review of the required material.

For a finite element formulation, displacements in a structure is represented in matrix form as follows:

$$[K]\ \{D\} = \{R\} \tag{2.17}$$

[D] is the vector of displacements to be calculated, given the nodal loads {R} and stiffness of the structure. Each node in a finite element mesh has associated with it a certain number of degrees of freedom, (depending on the type of element). Each degree of freedom is a displacement and is represented as an equation in the matrix representation of (2.17). In Equation (2.17) the stiffness matrix [K] is explained as follows: The jth column of [K] is the vector of nodal

forces that must be applied to the nodes to maintain static equilibrium when the jth d.o.f. has unit displacement and all other d.o.f. have zero displacement [48]. Boundary conditions are incorporated into degrees of freedom of a particular node. Those that are active are kept as equations in the matrix Equation (2.17), while those that are not active have no equations associated. Having obtained the vector of displacements, it is possible to evaluate stresses and strains from theory of elasticity.

In Equation (2.17) evaluation of the stiffness matrix is done at two levels:

1. At each element in the structure
2. For the whole structure (global stiffness matrix) from element matrices.

A variety of methods are available for formulation of the stiffness matrix given in Equation (2.17). Any standard text in finite elements presents these issues.

For evaluation of displacements the structure under consideration, the SAP 5 finite element program from University of California, Berkeley is used. Two type of elements are used for modeling the structure:

1. Eight node solid elements (three d.o.f./node ,Figure 2.2)
2. Thin plate elements (six d.o.f./node ,Figure 2.3)

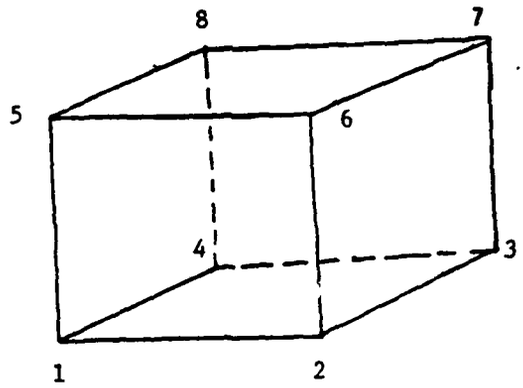

Fig. 2.2 A Typical Eight Node Solid Brick Element

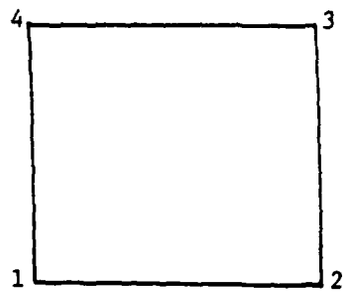

Fig 2.3 A Typical Plate Element

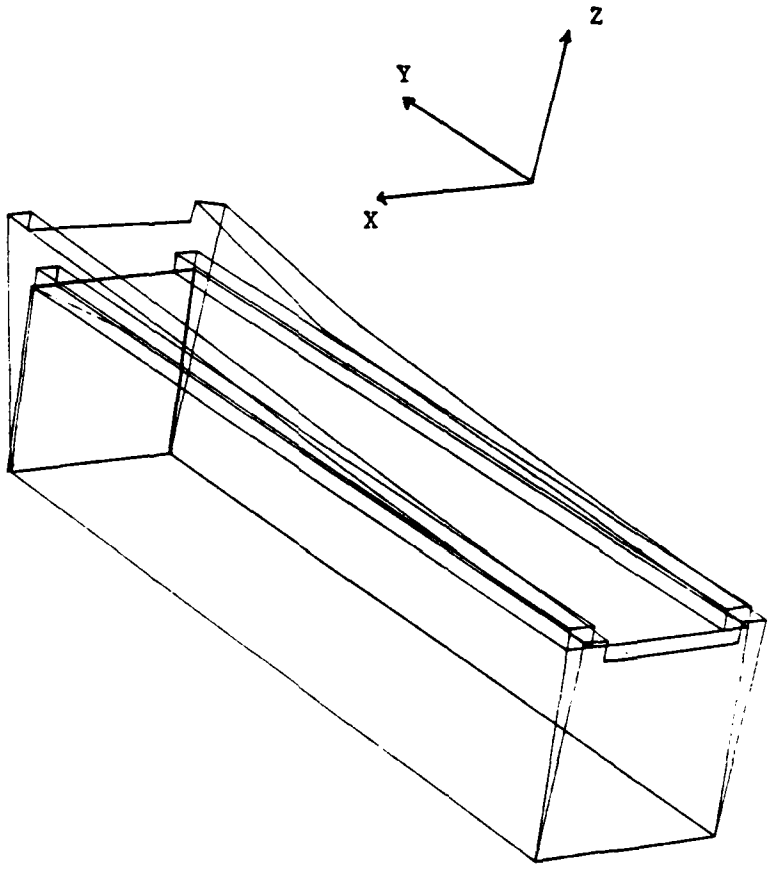

Fig. 2.4 Deformation of x axis, T = 180 mins

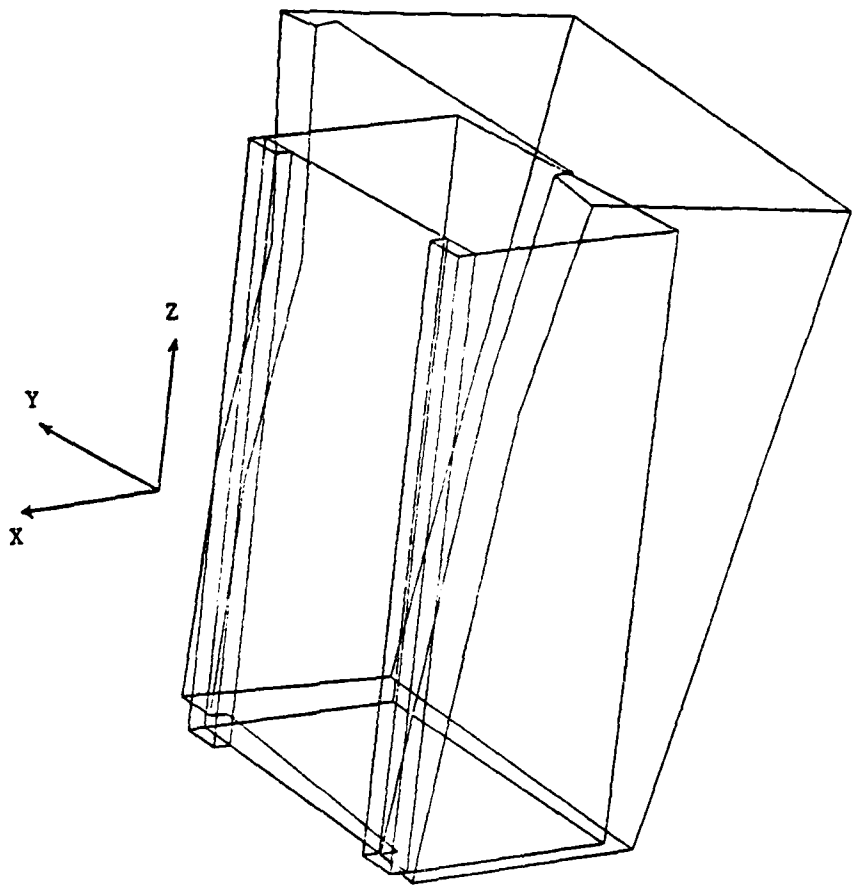

Fig. 2.5 Deformation of y axis, T = 180 mins

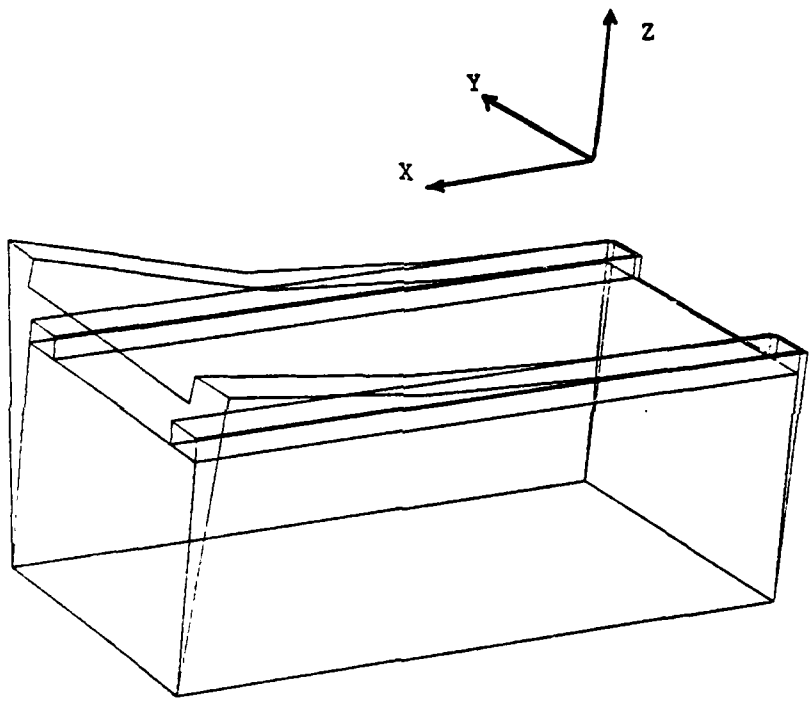

Fig. 2.6 Deformation of z axis, T = 180 mins

Eight node solid elements are in the shape of a brick and have eight nodal points, with three degrees of freedom per node. Thin plate elements are used for modeling plates in the structure. These nodes have six degrees of freedom per node. At nodal points common to both types of nodes, non-trivial degrees of freedom are found by combination. For the problem on hand, all nodes associated with the base of the machine are given zero degrees of freedom (essentially the base is fixed). All other nodes are given all possible degrees of freedom.

Results of numerical calculations are presented in the form of plots. For sake of clarity the plots presented show each of these axes independently. Displacements obtained at time 180 minutes for heat source type 1 (refer Appendix 1, Table A1.1 and Table A1.2) are plotted for each of axis, Figures 2.4, 2.5 and 2.6. The variety of conditions for which solutions have been obtained is presented in Appendix 1, Tables A1.1 and A1.2. Each of the Figures 2.4, 2.5 and 2.6 have local coordinate systems and these are shown in the respective figures. These coordinate systems are different from the machine coordinate system, shown in Figure 1.2. All calculations have been performed with respect to coordinate systems as shown in respective figures.

CHAPTER 3. COMPUTATION OF MACHINE ERRORS

3.1 General

Numerical techniques for evaluation of thermally induced displacements in machine tools were presented in chapter 2. Evaluation of errors from a distorted structure is discussed in the present chapter.

A typical linear carriage is shown in Figure 3.1. The following assumptions are made about the carriage:

1. It is designed for linear motion in x direction.
2. It is a rigid body.
3. Has a measuring device for x position.

On such a carriage, one can measure at least six different error terms, one for each degree of freedom [41]. Besides these errors, errors of drift and errors of non-orthogonality of the various axes present themselves. Each of these errors vary with temperature and it is suspected that strong relations exist between these errors and thermal fields in a machine tool structure. While some of these errors, typically positioning errors are a function of the positioning

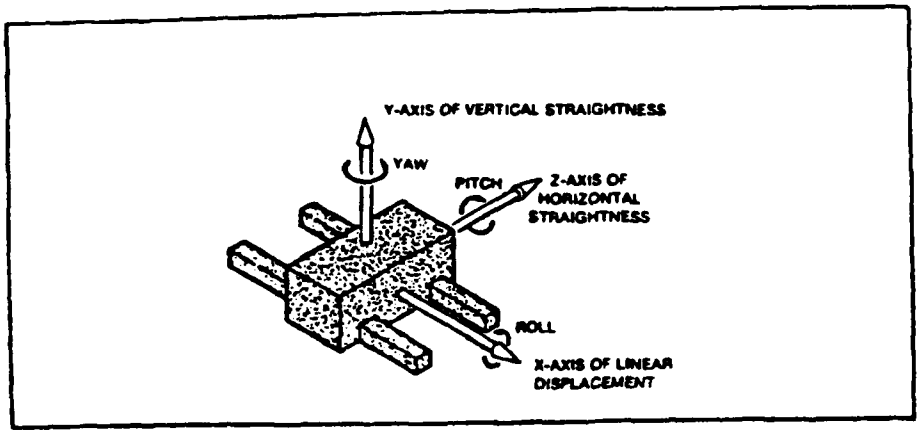

Fig. 3.1 The Six Degrees of Freedom [52]

system (lead screw, resolvers etc), rotational errors, and errors of straightness, will exhibit strong dependence, on machine structural distortions. A procedure for evaluation of structurally dependent errors is presented here. Combination of all errors causes the accuracy of a machine tool to deteriorate in it's work space. This is the principle offered by "Abbe offset" errors [32]. A method for evaluating the combined error in the work space is proposed. This chapter also discusses the possibility of prediction of thermally induced errors in machine tools. The approach proposed here uses regression equations and the method is verified with numerically evaluated data.

3.2 Evaluation of Structural Errors

Errors of interest are the six degrees of freedom exhibited by a carriage. The idea used here is to simulate carriage motion on a distorted structure (numerically computed) to obtain the error characteristics of the carriage. The methodology for obtaining structural errors is related to rigid body motion.

The carriage itself is represented as a line that spans the guideways. Motion of the carriage is numerically implemented by moving the line (representing the carriage) along that portion of the distorted

structure represented by the guideways. As the line moves along the guideways, it will exhibit six degrees of freedom (errors) which are similar in nature to the errors exhibited by a moving carriage.

The technique is explained in Figures 3.2 and 3.3. In Figures 3.2 and 3.3, the shaded portion is the guideway, while the line itself is the carriage. Figure 3.2 shows the calculation of vertical straightness error and roll. Figure 3.3 shows the calculation of pitch. Calculation of vertical straightness error is done by averaging the values of displacements at points 1,2,3 and 4. For calculation of roll, displacements at points 1 and 2 are averaged to give displacement at point 5. Displacements at points 3 and 4 are averaged to give the displacement at point 6. Roll is now calculated as

$$\text{Roll} = \text{atan}(\Delta z/dl) \tag{3.1}$$

Δz and dl are as shown in Figure 3.2. Figure 3.3 shows the technique for the calculation of pitch. Similarly yaw and horizontal straightness can be evaluated by considering the horizontal displacements of the guideways.

A few comments are appropriate here to distinguish between measurement of errors and evaluation of errors, as proposed above. Errors are invariably measured with respect to some reference frame. It is not possible to

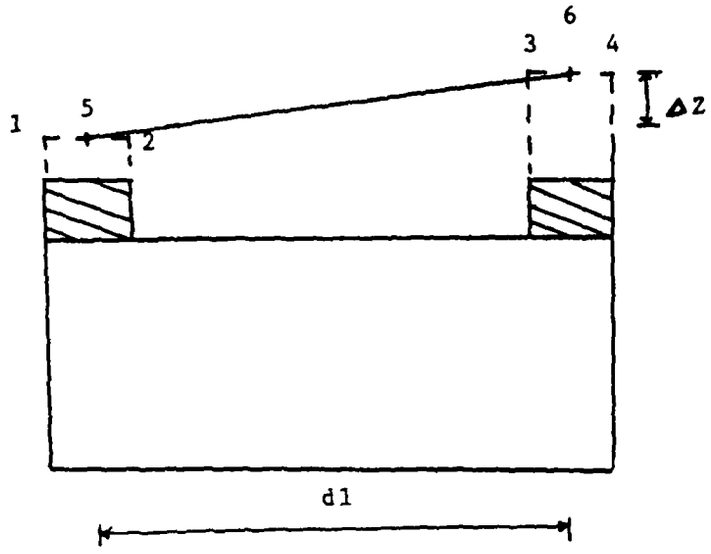

Fig. 3.2 Calculation of Roll

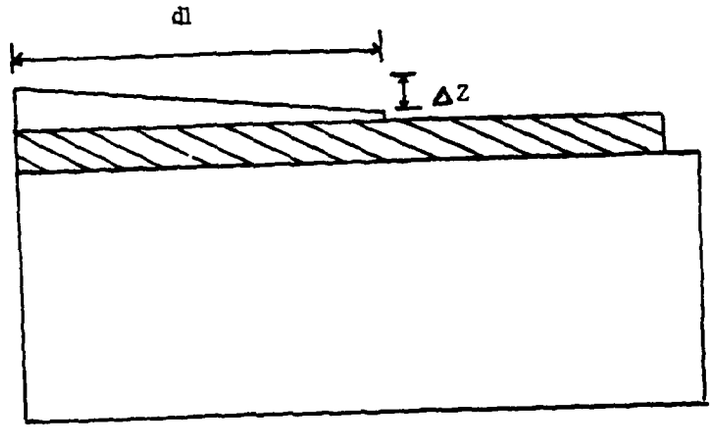

Fig. 3.3 Calculation of Pitch

measure error magnitudes in terms of absolutes. In contrast, in the above method, one has a fixed reference frame, namely the undistorted structure to compare against. This undistorted ("nice") structure does not exist in the case of experimental work. Further it is not possible to evaluate errors that are built into the machine. These errors are associated with manufacture and mounting of the machine in question.

As regards positional errors, it is well known that these are a function of the lead screw errors (pitch errors of lead screw) and of linear expansion of the lead screw. The lead screw is not incorporated into the model, hence it is not possible to evaluate lead screw induced errors. However, if it is assumed that lead screw expansion follows that of the structure, then it is reasonable to deduce that linear expansion of the lead screw is at least of the same magnitude as that evaluated by structural calculations. The calculated errors are plotted in Figures 3.4,3.5 and 3.6.

3.3 Assessment of Volumetric Errors

Volumetric error is defined here as the error vector of all combined errors in the work space of the machine. It is importance to determine how errors detected at the various axis combine in the work space of the machine. Evaluation of the combined error

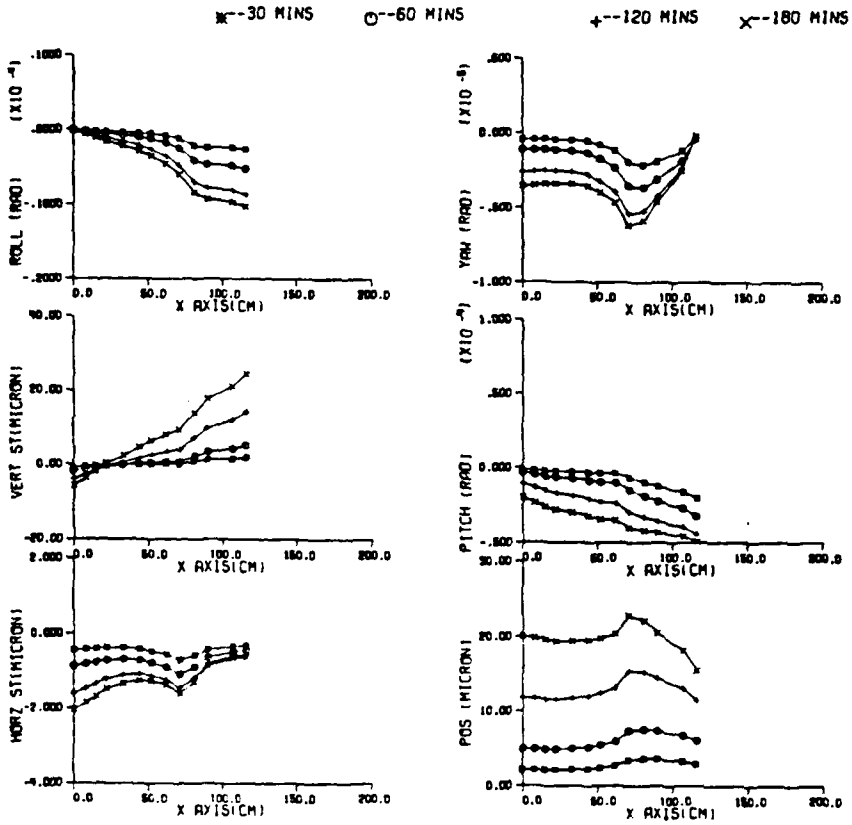

Fig. 3.4 Errors, x axis

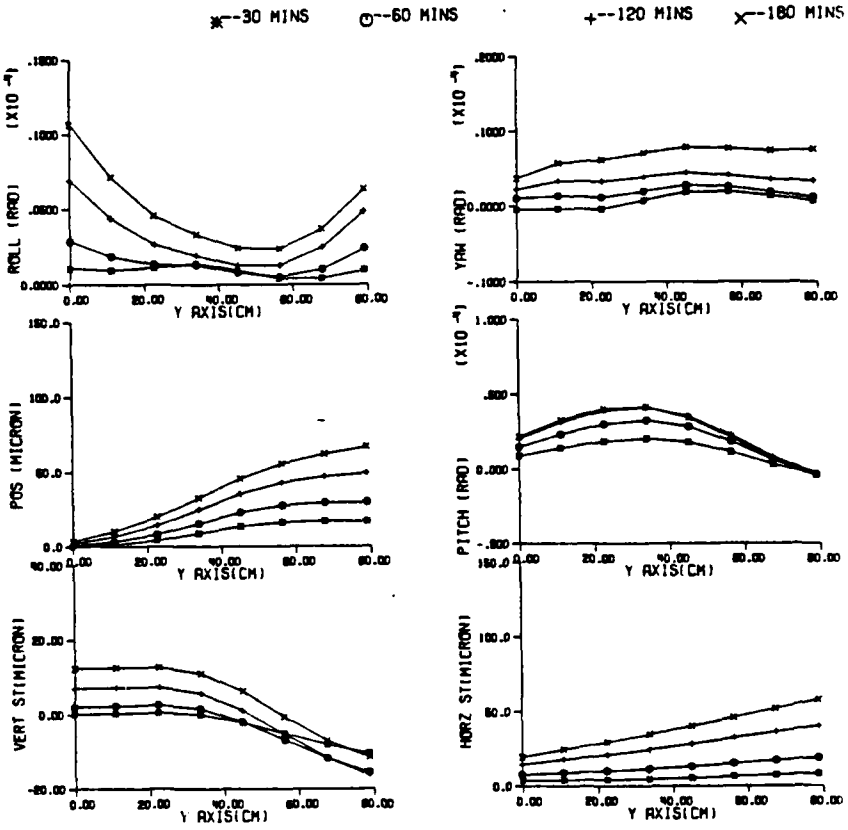

Fig. 3.5 Errors, y axis

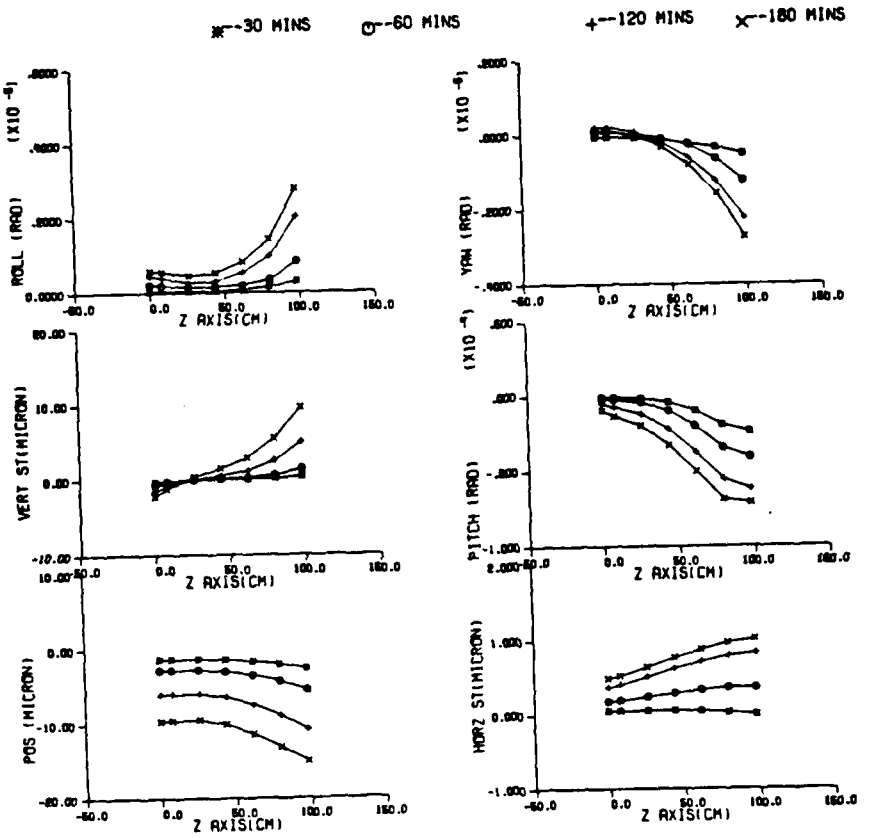

Fig. 3.6 Errors, z axis

provides an indication of the actual error a workpiece will experience. Here it should be stressed that errors of the cutting process and errors in location of tool and workpiece are not considered. For this part of the analysis, three models are formulated,

1. The coordinate system is orthogonal (model 1)
2. Non orthogonality of the coordinate system is considered (model 2)
3. Errors of drift are introduced (model 3)

Using the above models, it is possible to determine the error vector in the work space of a machine tool. The relations are defined for a three axis machine. Extension to larger number of axes is easy.

3.3.1 Model 1

The model derived here defines the volumetric error for a perfectly orthogonal system. By a perfectly orthogonal system, it is meant that motion along all three axes follows along three orthogonal lines. All errors are defined with respect to a single reference point and this point is the zero of the machine tool coordinate system. Second order effects are not considered.

Homogeneous transformations are are ideal for representation of errors. They are also ideal for calculation of volumetric errors. Combining errors for

x axis, the following transformation results [49]:

$$\begin{vmatrix} 1 & -ez(x) & ey(x) & \Delta x(x) \\ ez(x) & 1 & -ex(x) & \Delta y(x) \\ -ey(x) & ex(x) & 1 & \Delta z(x) \\ 0 & 0 & 0 & 1 \end{vmatrix} \qquad (3.2)$$

Similarly matrix transformations can be obtained for axes y and z. It is known that neglecting second order terms, these matrices possess the following property :

$$[X] \quad [Y] = [Y] \quad [X] \qquad (3.3)$$

Matrices obtained for x, y and z axes can be combined to obtain the volumetric error matrix as follows:

$$E = \begin{vmatrix} 1 & -EAZ & EAY & \Delta x \\ EAZ & 1 & -EAX & \Delta y \\ -EAY & EAX & 1 & \Delta z \\ 0 & 0 & 0 & 1 \end{vmatrix} \qquad (3.4)$$

Each of the above terms is defined as follows :

$$EAX = ex(x)+ex(y)+ex(z) \qquad (3.5)$$

$$EAY = ey(x)+ey(y)+ey(z)$$

$$EAZ = ez(x)+ez(y)+ez(z)$$

$$\Delta x = \Delta x(x) + \Delta x(y) + \Delta x(z)$$

$$\Delta y = \Delta y(x) + \Delta y(y) + \Delta y(z)$$

$$\Delta z = \Delta z(x) + \Delta z(y) + \Delta z(z)$$

Now volumetric error is calculated at any point in the work space as follows: If the vector of a point in the work space is given as:

$$[pos] = \begin{vmatrix} x \\ y \\ z \\ 1 \end{vmatrix} \tag{3.6}$$

then the volumetric error is :

$$[V] = [E] \; [pos] - [pos] \tag{3.7}$$

3.3.2 Model 2

Here errors of non-orthogonality are considered. Errors of non-orthogonality are due to non orthogonal motion of slides on the axes. Referring to Figure 3.7:

$$oa^2 + (oa*\tan(\beta))^2 + (oa*\tan(\alpha))^2 = ob^2$$

Defining the following,

$$con1 = \sqrt{1+\tan^2\alpha+\tan^2\beta} \tag{3.8}$$

real motion along any axis say x, is obtained as

$$\text{Real motion} = X \; con1 \tag{3.9}$$

In Equation (3.9), X is the x component of the [pos] vector. Similarly real motions along the other two axes are calculated. The calculation yields a vector of the form,

$$\begin{vmatrix} Xcon1 \\ Ycon2 \\ Zcon3 \\ 1 \end{vmatrix} \tag{3.10}$$

Equation (3.10) is necessary for calculation of volumetric error and it should be used in the place of

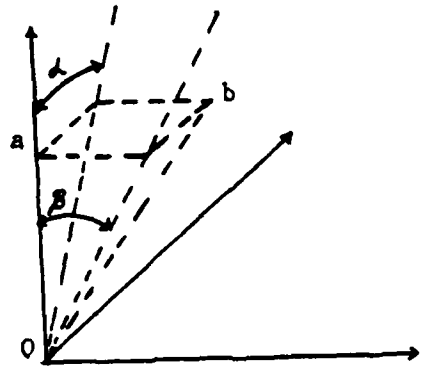

Fig. 3.7 Error of Non-Orthogonality

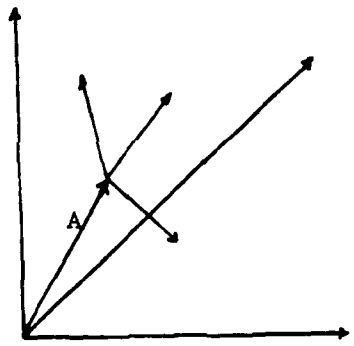

$$A = \begin{vmatrix} x & d \\ y & d \\ z & d \end{vmatrix}$$

Fig. 3.8 Error of Drift

[pos]. It should be noted that out of plane displacements, are represented as straightness errors and these have already been considered in model 1.

3.3.3 Model 3

The problem of drift is considered here. Referring to Figure 3.8, drift is defined as the following vector:

$$\begin{vmatrix} xd \\ yd \\ zd \end{vmatrix} \tag{3.11}$$

If, after the calculations of models 1 and 2, the following error vector results,

$$\begin{vmatrix} a_i \\ b_j \\ c_k \end{vmatrix} \tag{3.12}$$

then the volumetric error is

$$\begin{vmatrix} a_i+xd \\ b_j+yd \\ c_k+zd \end{vmatrix} \tag{3.13}$$

This vector effectively represents the error that a workpiece will experience. Calculation of this vector for the machine under consideration at various thermal states is shown in Figure 3.9. The calculations are for a cubic work space of 66 Centimeters (26 Inches). Error values as computed for the outer most point (66,66,66) of the cube are presented in Table 3.1.

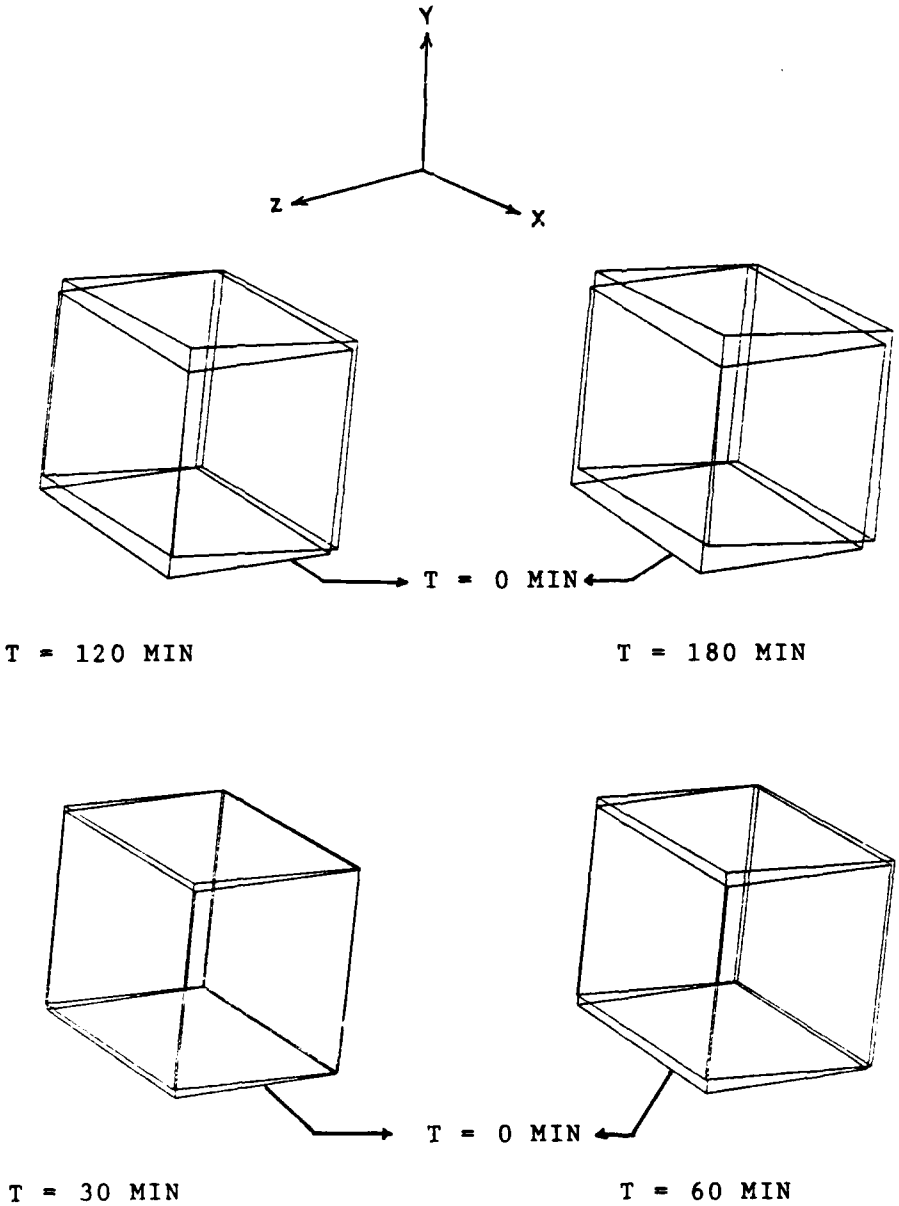

Fig. 3.9 Volumetric Accuracy

Table 3.1 Error of Outer Most Point of Work Space of Machine Tool, Numerical Work.

Time	Error (Microns)		
Mins	X dir.	Y dir.	Z dir.
30.	-14.31	11.41	20.37
60.	-24.76	27.24	34.48
120.	-38.95	59.97	57.75
180.	-48.18	87.97	82.52

3.4 Regression Model and Prediction Results

The objective is to obtain equations which will predict the errors of a machine at any point in time, simply based on the temperature values measured at certain points on the machine tool structure. The technique used is shown in Figure 3.10. With this objective in mind two models have been formulated. One is for time periods greater than 60 minutes while the other is for time periods less than 60 minutes. The models are developed and validated using numerical results computed by the techniques of section 3.2.

The models attempted are as follows :

$$\text{Error} = \sum_{i=1}^{i=n} (a_i T_i + b_i X T_i + c_i X^2 T_i) + d \qquad (3.14)$$

$$\text{Error} = \sum_{i=1}^{i=n} (a_i \log T_i + b_i X \log T_i + c_i X^2 \log T_i) + d \qquad (3.15)$$

In Equations (3.14 and 3.15), X indicates the position of the axis at which the error is evaluated and T_i is the temperature of the i'th point on the machine tool. For evaluation of the prediction equations, a maximum of 11 temperature points are used. Eight of these points are the corner points that make up a cube and the remaining are those that are associated with heat sources. Location of the temperature points are shown in

Appendix 1, Figures A1.5, A1.6 and A1.7.

Equation (3.14) is used for time periods greater than 60 minutes, while Equation (3.15) is used for time periods less than 60 minutes. The coefficients of Equations (3.14, 3.15) are evaluated using a standard SPSS package. Equation (3.15) is used because of the exponential nature of the heating process. The reason for using higher order terms of X is because it is known that the temperature and displacement fields are generally represented as sine and cosine terms of X multiplied by eigen values. Hence higher order terms of X are used. Results of the regression indicate in each of the 18 cases considered (6 on each axis), a coefficient of multiple determination greater than 0.95. Equations (3.14,3.15) for the machine being modeled are presented in Appendix 1. Appendix 1, Tables A1.3 and A1.4 present the accuracy obtainable by regression equations. It should be mentioned that the errors in the first 60 minutes of operation are of very small magnitude in comparison with those at later times. Due to this characteristic, it is felt that compensation based on look up tables would work very well for the first 60 minutes. The look up table would consist of average values of errors.

The prediction capabilities of the regression equations are presented in Figures 3.11, 3.12, 3.13 and

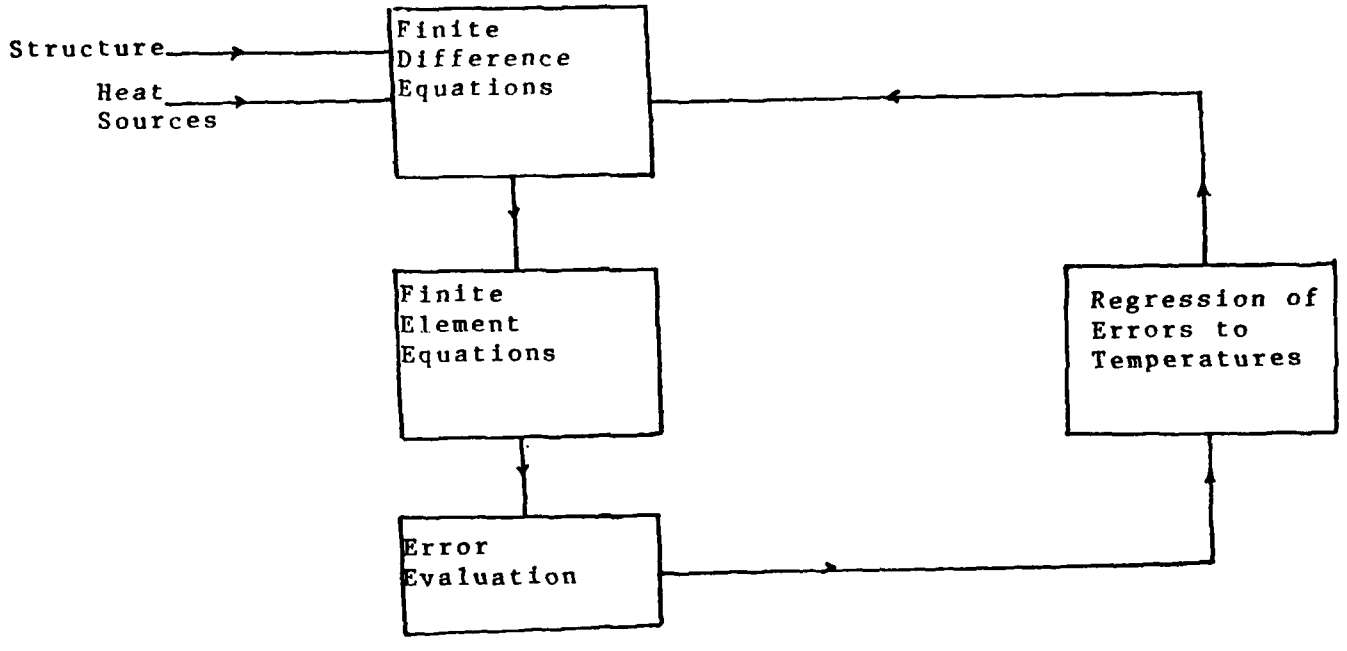

Fig. 3.10 Methodology for Calculation of Thermal Error Regression Functions

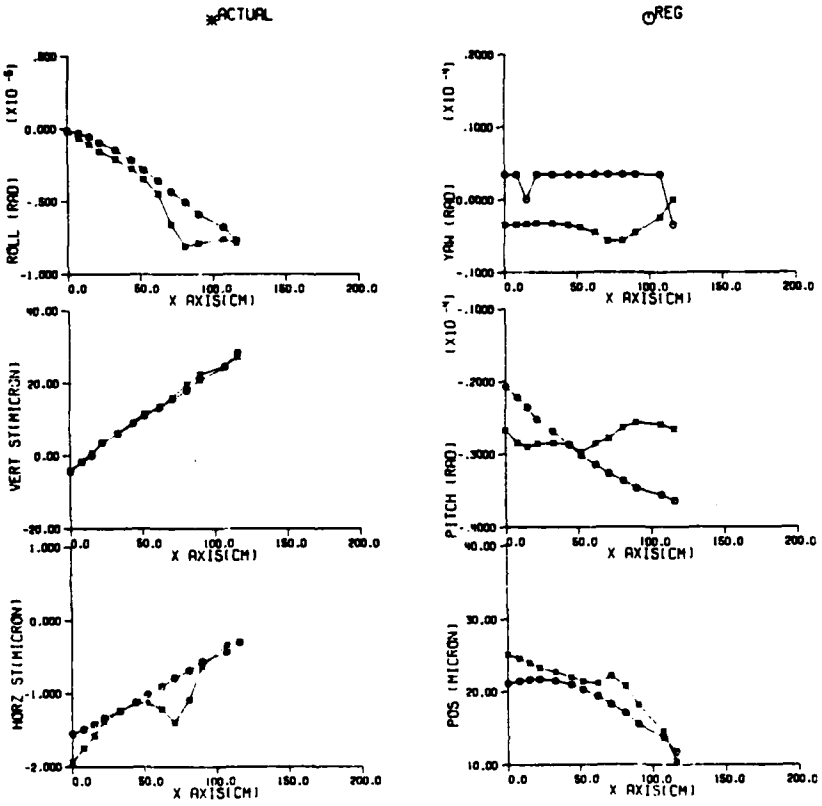

Fig. 3.11 Check of Regression Equations, x axis

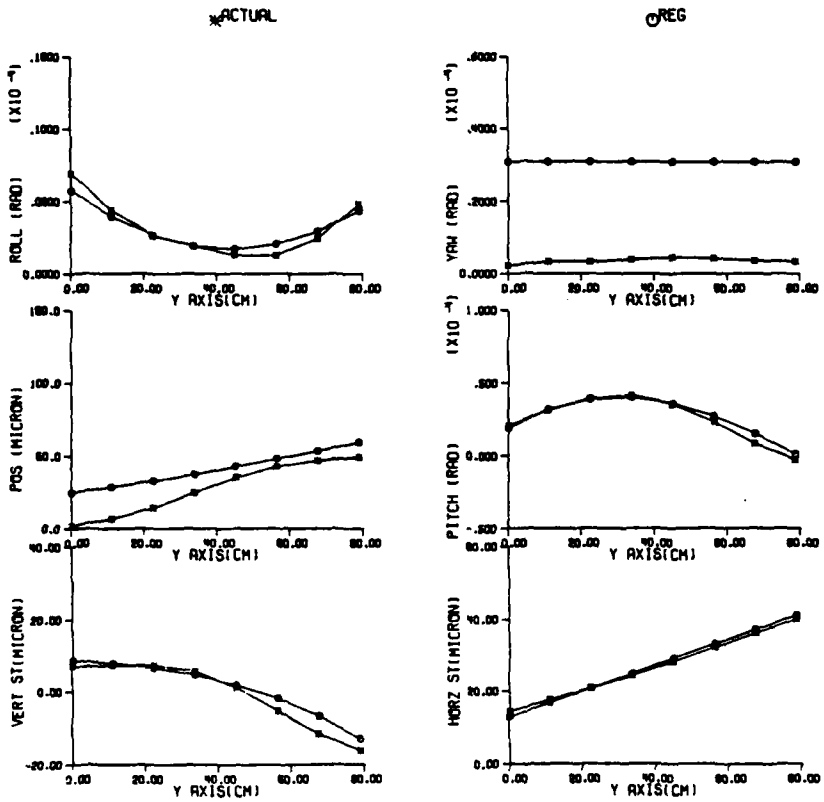

Fig. 3.12 Check of Regression Equations, y axis, case 1

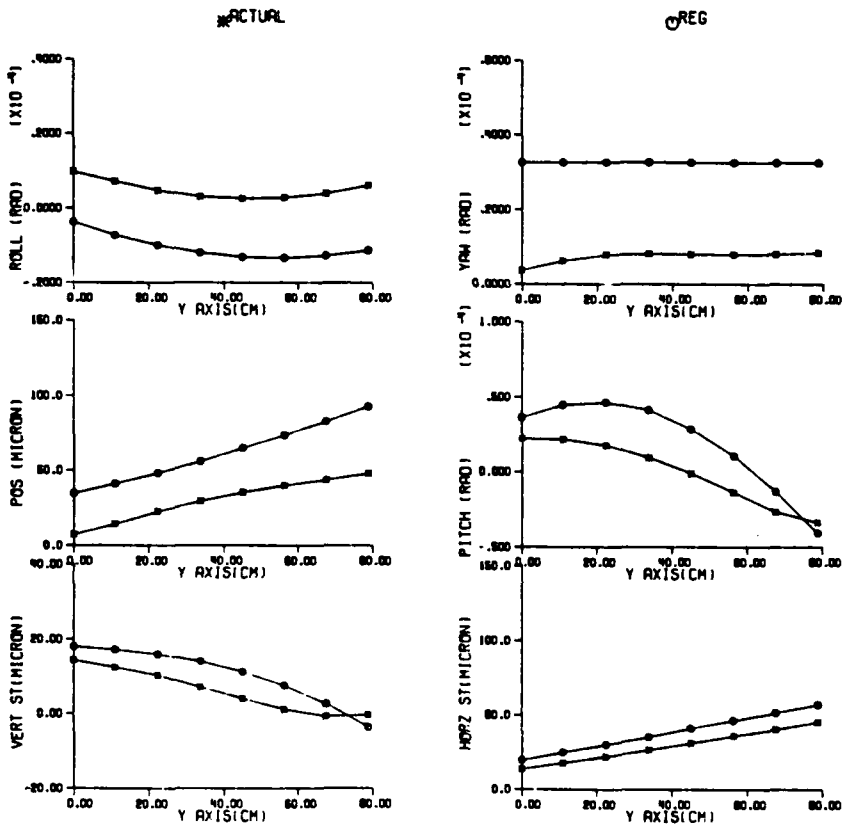

Fig. 3.13 Check of Regression Equations, y axis, case 2

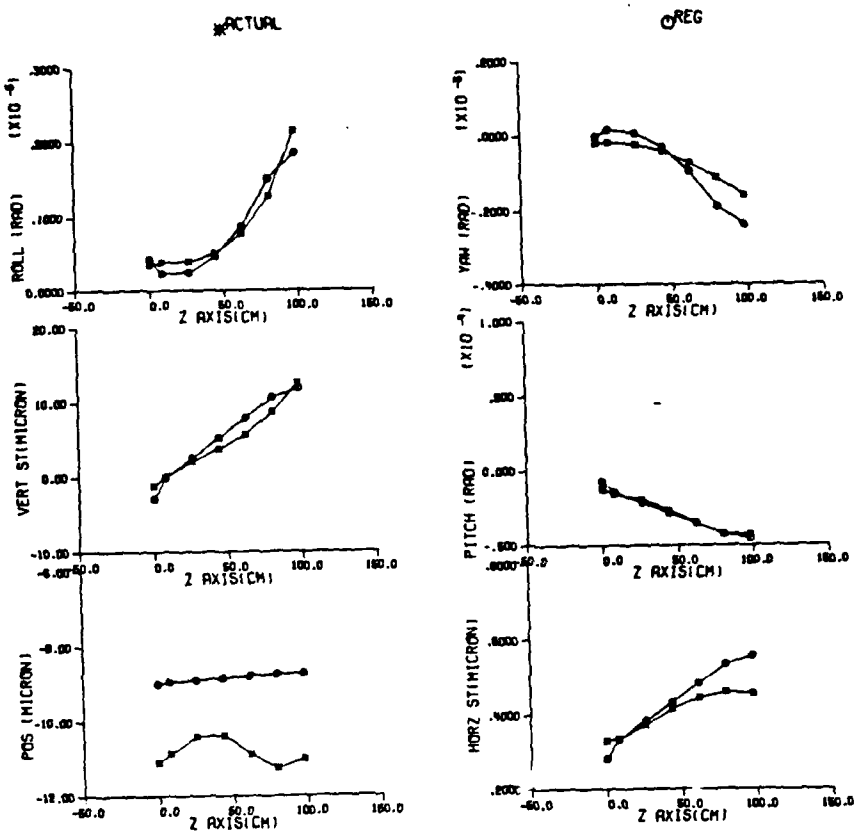

Fig. 3.14 Check of Regression Equations, z axis

3.14. The data points in Figures 3.11, 3.13 and 3.14 have not been used in the evaluation of the regression equations. Figure 3.12 shows the fit of the regression equation for data used to generate the equation. Figure 3.13 is specially relevant because the location of the heat source on the y axis has been shifted. In spite of the shift in the heat source, the form of the errors is the same, although there is a change in the constant term associated with the regression equation.

The data used for analysis has been generated by numerical methods and hence is idealistic. The real test of methods proposed is when the models of the type used in Equations (3.14,3.15), is tested with experimental data.

CHAPTER 4. ANALYTIC SOLUTIONS

4.1 General

Machine tools are generally made up of box type structures. Analysis of machine tool structures has been done in the past and a detailed discussion of the subject is present in [50]. However the discussion in [50] does not cover thermal deformations. Analysis of box type structures made of isotropic, homogeneous materials is of concern in this chapter and two types of analysis are covered here. One shows that thermal effects on the errors of machine tools can be predicted by the use of simple regression equations as shown in Chapter 3. The second gives analytic expressions for the evaluation of thermal fields in cubic box type structures. The second analysis has been extended to cover thermal deformations. Both analysis make use of quasistatic approximations. Experimental results presented in chapter 5, indicate that quasistatic conditions are present. Quasistatic approximations permit solution of uncoupled thermoelastic equations.

4.2 A Problem of 3 D Thermoelasticity

The problem of interest is to show that thermally induced displacements in a box made of thin plates can be predicted by monitoring the temperature of a few points. Machine tools are generally made of thin plate box type structures, and so the analysis should hold them too. In this section most of the ideas for simplification of differential equations have been adopted from [36].

A technique for the evaluation of machine tool errors has been presented in chapter 3. This technique essentially relates machine tool errors to displacements by simple transformations. Because of simple relationships between errors and displacements, prediction of displacements leads to the conclusion that prediction of errors is possible. The analysis also provides indications regarding the location of the minimum number of thermocouples required for prediction of thermally induced errors. It should be noted that as the number of thermocouples used increases, reliability in prediction is higher.

The thermoelastic equations to be solved are as follows [7]:

$$(\lambda + \mu) \frac{\partial e}{\partial x} + \mu \nabla^2 u - (3 \lambda + 2 \mu) \alpha_e \frac{\partial T}{\partial x} = 0 \quad (4.1)$$

$$(\lambda + \mu) \frac{\partial e}{\partial y} + \mu \nabla^2 v - (3 \lambda + 2 \mu) \alpha_e \frac{\partial T}{\partial y} = 0$$

$$(\lambda + \mu) \frac{\partial e}{\partial z} + \mu \nabla^2 w - (3 \lambda + 2 \mu) \alpha_e \frac{\partial T}{\partial z} = 0$$

Body forces have been neglected in the Equations (4.1) .

The terms are defined as follows:

$$e = \frac{\partial u}{\partial x} + \frac{\partial v}{\partial y} + \frac{\partial w}{\partial z} \tag{4.2}$$

u,v,w= displacements in x,y,z respectively

$T = T(x,y,z,t)$ is temperature and t is time

$$\lambda = \frac{(\nu E)}{(1 + \nu)(1 - 2 \nu)}$$

$$\mu = \frac{E}{2 (1 + \nu)}$$

ν = Poisson's ratio

E = Modulus of Elasticity

α_e = Coefficient of thermal expansion

For the heat transfer problem, the equation is [51],

$$\nabla^2 T + \frac{g(t)}{K} \delta(x-x_1)\delta(y-y_1)\delta(z-z_1) - h T = \frac{1}{(\alpha_t)} \frac{\partial T}{\partial t} \tag{4.3}$$

In Equation (4.3), the terms are

h = Heat transfer coefficient (4.4)

T = Temperature

K = Thermal conductivity

g(t) = Heat generation

$$\alpha_t = \frac{K}{(\rho c_p)}$$

ρ = Density

c_p = Heat capacity

The -h T term in Equation (4.3) indicates heat loss from the surface of the body to a medium at zero temperature.

Initially the elasticity problem will be simplified and then the thermal problem will be incorporated. Define potentials of the form [36]:

$$u = \frac{\partial \psi}{\partial x} e^{-\alpha_t ht} \tag{4.5}$$
$$v = \frac{\partial \psi}{\partial y} e^{-\alpha_t ht}$$
$$w = \frac{\partial \psi}{\partial z} e^{-\alpha_t ht}$$

Using Equations (4.5), it is seen that,

$$e = \nabla^2 \psi \, e^{-\alpha_t ht} \tag{4.6}$$

and

$$\nabla^2 u = \frac{\partial}{\partial x} [\nabla^2 \psi] e^{-\alpha_t ht} \tag{4.7}$$
$$\nabla^2 v = \frac{\partial}{\partial y} [\nabla^2 \psi] e^{-\alpha_t ht}$$
$$\nabla^2 w = \frac{\partial}{\partial z} [\nabla^2 \psi] e^{-\alpha_t ht}$$

Substituting Equations (4.6) and (4.5) in Equations (4.1) yields,

$$[(\lambda+\mu)\frac{\partial}{\partial x} \nabla^2\psi + \mu\frac{\partial}{\partial x} \nabla^2 \psi]e^{-\alpha_t ht} = (3\lambda+2\mu)\, \alpha_e \frac{\partial T}{\partial x} \tag{4.8}$$
$$[(\lambda+\mu)\frac{\partial}{\partial y} \nabla^2\psi + \mu\frac{\partial}{\partial y} \nabla^2 \psi]e^{-\alpha_t ht} = (3\lambda+2\mu)\, \alpha_e \frac{\partial T}{\partial y}$$
$$[(\lambda+\mu)\frac{\partial}{\partial z} \nabla^2\psi + \mu\frac{\partial}{\partial z} \nabla^2 \psi]e^{-\alpha_t ht} = (3\lambda+2\mu)\, \alpha_e \frac{\partial T}{\partial z}$$

Simplifying Equations (4.8),

$$(\lambda+2\mu)\, [\nabla^2 \frac{\partial \psi}{\partial x}]e^{-\alpha_t ht} = (3\lambda+2\mu)\, \alpha_e \frac{\partial T}{\partial x} \tag{4.9}$$
$$(\lambda+2\mu)\, [\nabla^2 \frac{\partial \psi}{\partial y}]e^{-\alpha_t ht} = (3\lambda+2\mu)\, \alpha_e \frac{\partial T}{\partial y}$$
$$(\lambda+2\mu)\, [\nabla^2 \frac{\partial \psi}{\partial z}]e^{-\alpha_t ht} = (3\lambda+2\mu)\, \alpha_e \frac{\partial T}{\partial z}$$

From [36], the following relationship is known:

$$\frac{(3\lambda + 2\mu)}{(\lambda + 2\mu)} = \frac{(1+\nu)}{(1-\nu)} \tag{4.10}$$

Using Equations (4.10) in Equations (4.9), yields

$$[\nabla^2 \frac{\partial\psi}{\partial x}]e^{-\alpha_t ht} = \frac{(1+\nu)}{(1-\nu)}\alpha_e \frac{\partial T}{\partial x} \tag{4.11}$$

$$[\nabla^2 \frac{\partial\psi}{\partial y}]e^{-\alpha_t ht} = \frac{(1+\nu)}{(1-\nu)}\alpha_e \frac{\partial T}{\partial y}$$

$$[\nabla^2 \frac{\partial\psi}{\partial z}]e^{-\alpha_t ht} = \frac{(1+\nu)}{(1-\nu)}\alpha_e \frac{\partial T}{\partial z}$$

Equations (4.11) are satisfied if [36]

$$[\nabla^2 \psi]e^{-\alpha_t ht} = \frac{(1+\nu)}{(1-\nu)}\alpha_e T \tag{4.12}$$

The general solution of Equation (4.12) is given by [36]

$$\psi = -\frac{(1+\nu)\alpha_e}{4\pi(1-\nu)}\iiint_D T(\xi,\eta,\zeta,t) \frac{1}{r'} * e^{\alpha_t ht} d\xi, d\eta, d\zeta \tag{4.13}$$

In Equation (4.13) r' is distance between point ξ, η, ζ and x, y, z.

Also $T(\xi,\eta,\zeta,t)$ is the temperature at point ξ, η, ζ at time t. Notice that time enters Equation (4.13) only as a parameter. Solution of Equation (4.13) is generally very difficult, hence an alternate formulation is necessary.

In Equation (4.3), the -h T term can be removed by using the following transformation. Let

$$T = L\, e^{-\alpha_t ht}$$

Now Equation (4.3) will be written as :

$$\nabla^2 L + \frac{g(t)}{(K)}\delta(x-x')\delta(y-y')\delta(z-z')e^{\alpha_t ht} = \frac{1}{\alpha_t}\frac{\partial L}{\partial t} \qquad (4.14)$$

Letting

$$\frac{g(t)}{K}\delta(x-x')\delta(y-y')\delta(z-z') = \nabla^2 Q$$

enables Equation (4.14) to be written as

$$\nabla^2 L + \nabla^2 Q\, e^{\alpha_t ht} = \frac{1}{\alpha_t}\frac{\partial L}{\partial t} \qquad (4.15)$$

Equation (4.15) then simplifies to

$$\nabla^2 [\, L + Q\, e^{\alpha\, ht} \,] = \frac{1}{\alpha_t}\frac{\partial L}{\partial t} \qquad (4.16)$$

Differentiating Equation (4.12) with respect to t, after making the substitution $T = Le^{-\alpha_t ht}$ results in,

$$\nabla^2 \frac{\partial \psi}{\partial t} = \frac{(1+\nu)}{(1-\nu)}\alpha_e \frac{\partial L}{\partial t} \qquad (4.17)$$

Using Equation (4.16) in (4.17) gives

$$\nabla^2 \frac{\partial \psi}{\partial t} = \frac{(1+\nu)}{(1-\nu)}\alpha_e \alpha_t \nabla^2 [\, L + Qe^{\alpha_t ht} \,] \qquad (4.18)$$

Replacing ∇^2 on both sides of Equation (4.18)

$$\frac{\partial \psi}{\partial t} = \frac{(1+\nu)}{(1-\nu)}\alpha_e \alpha_t [\, L + Qe^{\alpha_t ht} \,] \qquad (4.19)$$

From Equation (4.19) ψ is evaluated to be

$$\psi = \frac{(1+\nu)}{(1-\nu)}\alpha_e\, \alpha_t \int_0^t [\, L + Qe^{\alpha_t ht} \,]dt \qquad (4.20)$$

Boundary conditions have to be considered. Machine tools are generally fixed at a few points on the base to

AD-A163 598 THE SCIENCE OF AND ADVANCED TECHNOLOGY FOR COST-EFFECTIVE MANUFACTURE OF..(U) PURDUE UNIV LAFAYETTE IN SCHOOL OF INDUSTRIAL ENGINEERING 2/4

UNCLASSIFIED R VENUGOPAL ET AL. OCT 85 N00014-83-K-0385 F/G 13/9 NL

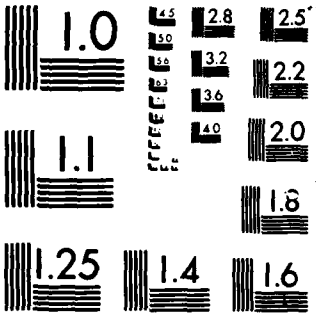

MICROCOPY RESOLUTION TEST CHART
NATIONAL BUREAU OF STANDARDS 1963 A

the foundation. For the problem on hand, let the machine be fixed at k points on the base (x1,y1,0), (x2,y2,0) ..... (xk,yk,0) These boundary conditions are written as

$$u(x,y,0,t) = 0 \ ; \text{ at all } k \tag{4.21}$$
$$v(x,y,0,t) = 0 \ ; \text{ at all } k$$
$$w(x,y,0,t) = 0 \ ; \text{ at all } k$$

Inclusion of boundary conditions is generally done by splitting them into two parts as follows,

$$u = u^{(1)} + u^{(2)} \tag{4.22}$$
$$v = v^{(1)} + v^{(2)}$$
$$w = w^{(1)} + w^{(2)}$$

In Equations (4.22), u(x,y,z,t) is written as u. Similarly for v and w. In Equations (4.22), the terms $u^{(1)}$, $v^{(1)}$ and $w^{(1)}$ satisfy Equations (4.1) without any boundary conditions, while the terms $u^{(2)}$, $v^{(2)}$ and $w^{(2)}$ satisfy the problem of isothermal elasticity with the boundary conditions suitably modified.

The problem of isothermal elasticity is defined as follows

$$(\lambda + \mu)\frac{\partial e^{(2)}}{\partial x} + \mu\nabla^2 u^{(2)} = 0 \tag{4.23}$$
$$(\lambda + \mu)\frac{\partial e^{(2)}}{\partial y} + \mu\nabla^2 v^{(2)} = 0$$
$$(\lambda + \mu)\frac{\partial e^{(2)}}{\partial z} + \mu\nabla^2 w^{(2)} = 0$$

For the isothermal problem, the boundary conditions are

written as Equations (4.24), from (4.22).

$$u^{(2)} = -u^{(1)} \quad ; \text{ at all k;} \tag{4.24}$$
$$v^{(2)} = -v^{(1)} \quad ; \text{ at all k;}$$
$$w^{(2)} = -w^{(1)} \quad ; \text{ at all k;}$$

Equations (4.24) force the base to remain fixed at all k points. From Equation (4.20) and (4.5) the displacements are

$$u^{(1)} = \frac{\partial\psi}{\partial x} e^{-\alpha_t ht} \tag{4.25}$$
$$v^{(1)} = \frac{\partial\psi}{\partial y} e^{-\alpha_t ht}$$
$$w^{(1)} = \frac{\partial\psi}{\partial z} e^{-\alpha_t ht}$$

Using Equations (4.25), the boundary conditions for the isothermal problem are written as

$$u^{(2)} = -\frac{\partial\psi}{\partial x} e^{-\alpha_t ht} \quad \text{at all k} \tag{4.26}$$
$$v^{(2)} = -\frac{\partial\psi}{\partial y} e^{-\alpha_t ht} \quad \text{at all k}$$
$$w^{(2)} = -\frac{\partial\psi}{\partial z} e^{-\alpha_t ht} \quad \text{at all k}$$

The isothermal problem defined by Equation (4.23) and associated boundary conditions of Equation (4.26) is solved by a superposition principle over the k points where the displacements are zero. Despite the simple appearance of Equations (4.23), their treatment is not very simple. One method of solving such Equations is presented in [36]. The method is calls for setting up displacements as follows

$$u = \phi_1 - \frac{\alpha\partial}{\partial x}(\phi_0 + x\phi_1 + y\phi_2 + z\phi_3) \tag{4.27}$$
$$v = \phi_1 - \frac{\alpha\partial}{\partial y}(\phi_0 + x\phi_1 + y\phi_2 + z\phi_3)$$
$$w = \phi_1 - \frac{\alpha\partial}{\partial z}(\phi_0 + x\phi_1 + y\phi_2 + z\phi_3)$$

In Equations (4.27)

$$4\alpha = \frac{1}{1 - \nu} \tag{4.28}$$

also the functions are to satisfy the following conditions.

$$\nabla^2\phi_0 = 0 \tag{4.29}$$
$$\nabla^2\phi_1 = 0$$
$$\nabla^2\phi_2 = 0$$
$$\nabla^2\phi_3 = 0$$

Essentially the isothermal problem is to be solved at the k points where displacements are to be equal to zero. Explicit solution of the isothermal problems will not be attempted here. Let $u^{k(2)}$, $v^{k(2)}$ and $w^{k(2)}$ be the solution of the k th problem. Solution of the displacement problem is now written out as

$$u = \frac{1+\nu}{1-\nu}\,\alpha_e\alpha_t\int_0^t [\frac{\partial}{\partial x}(L+Qe^{\alpha_t ht}) + \sum_{j=1}^{k} u^{j(2)}]e^{-\alpha_t ht}\,dt \tag{4.30}$$
$$v = \frac{1+\nu}{1-\nu}\,\alpha_e\alpha_t\int_0^t [\frac{\partial}{\partial y}(L+Qe^{\alpha_t ht}) + \sum_{j=1}^{k} v^{j(2)}]e^{-\alpha_t ht}\,dt$$
$$w = \frac{1+\nu}{1-\nu}\,\alpha_e\alpha_t\int_0^t [\frac{\partial}{\partial z}(L+Qe^{\alpha_t ht}) + \sum_{j=1}^{k} w^{j(2)}]e^{-\alpha_t ht}\,dt$$

The thermal solution will be included into the above equation. For the thermal problem, variation of temperature through thickness will be neglected and the

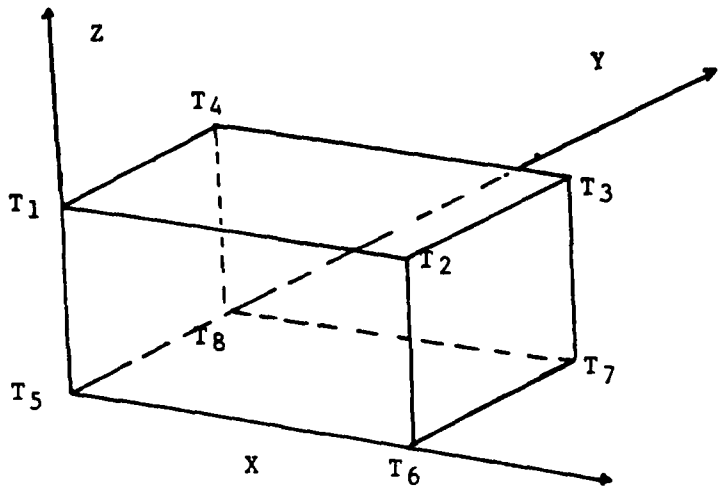

Fig. 4.1 Body of Thin Plates

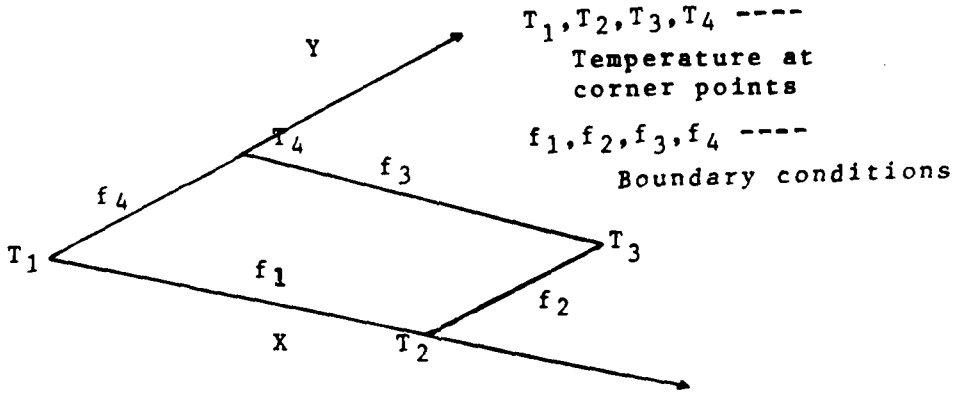

Fig. 4.2 Boundary Conditions

analysis will be restricted to a single plate. Consider the body shown in Figure (4.1). The body is heated by a point heat source, and the observed boundary conditions are as as shown in Figure (4.2). Explicitly the boundary conditions are written out as

$$T = f_4(y,t) \text{ at } x = 0 \qquad (4.31)$$
$$T = f_2(y,t) \text{ at } x = a$$
$$T = f_1(x,t) \text{ at } y = 0$$
$$T = f_3(x,t) \text{ at } y = b$$

The boundary conditions as defined by Equations (4.31), are assumed to satisfy the heat conduction equation, and so are separable into functions of space and time. Explicitly $f_4(y,t)$ can be written as

$$f_4 = F_4(y)\, e^{-p\,t} \qquad (4.32)$$

In Equation (4.32), $F_4(y)$ is a function of the variable y, while $e^{-p\,t}$ is the variation with time. p is a constant and the variation with time is negative exponential. All the functions f_1, f_2, f_3 and f_4 are expressible as products of space and time.

$$f_1(x,t) = F_1(x)e^{-p\,t}$$
$$f_2(x,t) = F_2(x)e^{-p\,t}$$
$$f_3(y,t) = F_3(y)e^{-p\,t}$$
$$f_4(y,t) = F_4(y)e^{-p\,t}$$

The initial condition is

$$T(x,y,z,0) = 0 \qquad (4.33)$$

Typically in an experiment, if the temperatures of corner points are measured, then, the temperature of corner point 1 (refer Figure 4.2) will be given as

$$\text{Temp at point 1} = F_1(0)e^{-p\ t} = F_4(0)e^{-p\ t}$$

Similarly the temperatures of the other 7 corner points can be derived from equations like (4.32). The heat transfer problem (two dimensional version) given by Equation (4.3) will be considered. Using the following simplification $T = L\ e^{-\alpha_t ht}$, Equation (4.3) is written as

$$\nabla^2 L + \frac{1}{K} e^{\alpha_t ht} g(t)\delta(x-x_1)\delta(y-y_1) = \frac{1}{(\alpha_t)}\frac{\partial L}{\partial t} \qquad (4.34)$$

The boundary conditions as expressed by Equations (4.31) will undergo the same transformations and are written as

$$L = f_4(y,t)\ e^{\alpha_t ht} \quad \text{at } x = 0 \qquad (4.35)$$

$$L = f_2(y,t)\ e^{\alpha_t ht} \quad \text{at } x = a$$

$$L = f_1(x,t)\ e^{\alpha_t ht} \quad \text{at } y = 0$$

$$L = f_3(x,t)\ e^{\alpha_t ht} \quad \text{at } y = b$$

The initial condition is

$$T(x,y,z,0) = 0 \text{ ie } L(x,y,z,0) = 0 \qquad (4.36)$$

The Green's function for the problem is given as [51],

$$G(x,y,t|x',y',\tau) = \frac{4}{ab}\sum_{m=1}^{\infty}\sum_{n=1}^{\infty} e^{-\alpha_t(\beta_m^2 + \eta_n^2)(t-\tau)} *$$

$$\sin(\beta_m x)\sin(\eta_n y)\sin(\beta_m x')\sin(\eta_n') \qquad (4.37)$$

In Equation (4.37), β_m and η_n are the eigen values.

$$\beta_m = \frac{m\pi}{a} \; ; \; \eta_n = \frac{n\pi}{b} \; ; \; m = 1,2,\ldots \; n = 1,2,\ldots\ldots$$

Letting,

$$c = \alpha_t(\beta_m^2 + \eta_n^2)$$

and

$$cl = \alpha_t(\beta_m^2 + \eta_n^2 + h)$$

solution of the heat transfer problem is now written out as

$$\begin{aligned}
L = \frac{4\alpha_t}{(Kab)} \int_{\tau=0}^{t} \int_{x'=0}^{a} \int_{y'=0}^{b} \Sigma\Sigma_{mn} e^{-c(t-\tau)} \sin(\beta_m x)\sin(\eta_n y) * \\
\sin(\beta_m x')\sin(\eta_n y')g(\tau)e^{\alpha_t h\tau} * \\
\delta(x-x_1)\delta(y-y_1)d\tau dx' dy' \\
+\alpha_t \Sigma\Sigma_{mn} \int_{\tau=0}^{t} \int_{y'=0}^{b} e^{-c(t-\tau)} \beta_m \sin(\beta_m x)\sin(\eta_n y) * \\
\sin(\eta_n y')f_4(y',\tau)e^{\alpha_t h\tau} d\tau dy' \\
-\alpha_t \Sigma\Sigma_{mn} \int_{\tau=0}^{t} \int_{y'=0}^{b} e^{-c(t-\tau)} (-1)^m \beta_m \sin(\beta_m x)\sin(\eta_n y) * \\
\sin(\eta_n y')f_2(y',\tau)e^{\alpha_t h\tau} d\tau dy' \\
+\alpha_t \Sigma\Sigma_{mn} \int_{\tau=0}^{t} \int_{x'=0}^{a} e^{-c(t-\tau)} \eta_n \sin(\beta_m x)\sin(\eta_n y) * \\
\sin(\beta_m x')f_1(x',\tau)e^{\alpha_t h\tau} d\tau dx' \\
-\alpha_t \Sigma\Sigma_{mn} \int_{\tau=0}^{t} \int_{x'=0}^{a} e^{-c(t-\tau)} (-1)^n \eta_n \sin(\beta_m x)\sin(\eta_n y) * \\
\sin(\beta_m x')f_3(x',\tau)e^{\alpha_t h\tau} d\tau dx' \qquad (4.38)
\end{aligned}$$

Term by term simplification can be done. The first term

of Equation (4.38) is written as (under constant heat generation conditions ie g(t) = g)

$$\frac{4\alpha_t}{K}\sum_m\sum_n g\left[\frac{e^{\alpha_t ht}-e^{-ct}}{\alpha_t h+c}\right]\sin(\beta_m x) * \sin(\eta_n y)\sin(\beta_m x_1)\sin(\eta_n y_1) \tag{4.39}$$

The second integral on simplification will give

$$\alpha_t\sum_m\sum_{2n-1} e^{-ct}\beta_m\sin(\beta_m x)\sin(\eta_n y)\frac{2}{\eta_n}\left[\frac{e^{(c1-p)t}}{c1-p}*(F_4(b)-T_4(0))\right] \tag{4.40}$$

Note that n is replaced by (2n-1), indicating that n will take on only odd values. This notation will be adopted henceforth. In the above simplification, the second and higher derivatives of F_4 with respect to y have not been considered. During the simplification, it is seen that the odd derivatives drop out, while the even derivatives will produce functions of the form

$$-\int_0^b \sin(\eta_n y')f_4''(y',\tau)dy' \tag{4.41}$$

In Equation (4.41) f_4'' denotes the second derivative with respect to y'. It is seen that the Equation (4.41) will essentially produce a series of the form

$$\frac{-1}{\eta_n}[-\cos(\eta_n y')f_4''(y',\tau)+\frac{1}{\eta_n}[\cos(\eta_n y')f_4''''(y',\tau)\ldots\ldots$$

The whole thermal profile is written as

$$L = \tag{4.42}$$

$$\frac{4g\alpha_t}{K}\sum_m\sum_n \frac{[e^{\alpha_t ht} - e^{-ct}]}{c + \alpha_t h} *$$

$$\sin(\beta_m x)\sin(\eta_n y)\sin(\beta_m x_1)\sin(\eta_n y1)$$

$$+\alpha_t \sum_m \sum_{2n-1} \frac{e^{(\alpha_t h-p)t}}{c1-p}\left(\frac{2\beta_m}{\eta_n}\right)\sin(\beta_m x)\sin(\eta_n y) *$$

$$[F_4(b)-F_4(0)]$$

$$-\alpha_t \sum_m \sum_{2n-1} \frac{e^{(\alpha_t h-p)t}}{c1-p}\left(\frac{2\beta_m(-1)^m}{\eta_n}\right)\sin(\beta_m x)\sin(\eta_n y) *$$

$$[F_2(b)-F_2(0)]$$

$$+\alpha_t \sum_{2m-1} \sum_n \frac{e^{(\alpha_t h-p)t}}{c1-p}\left(\frac{2\eta_n}{\beta_m}\right)\sin(\beta_m x)\sin(\eta_n y) *$$

$$[F_1(a)-F_1(0)]$$

$$-\alpha_t \sum_{2m-1} \sum_n \frac{e^{(\alpha_t h-p)t}}{c1-p}\left(\frac{2\eta_n(-1)^n}{\beta_m}\right)\sin(\beta_m x)\sin(\eta_n y) *$$

$$[F_3(a)-F_3(0)]$$

For computation of the errors of machine tools refer to chapter 3, where a technique has been described for evaluation of the errors as a function of displacements. Essentially the method calls for the evaluation of displacements along two lines of interest. The slide essentially moves along these two lines. To show that errors are predictable, as a function of temperatures, it will be sufficient if we show that displacements u,v and w are predictable. Also variation of errors is of interest only along a particular

direction and this direction is the one along which motion takes place. For this particular problem, assume that the direction of motion is the x axis, then if it can be shown that displacements along x (with y, z being held constant) can be predicted as a function of temperatures it will be sufficient. This will be done for one of the displacement u, since for v and w the same analysis will hold. u is defined to be

$$u = \frac{1+\nu}{1-\nu}\alpha_e \alpha_t \int_0^t [\frac{\partial}{\partial x}(L+Qe^{\alpha_t ht}) + \sum_{j=1}^{k} u^{j(2)}]e^{-\alpha_t ht} dt$$

Now a term by term simplification will be carried out. The first term L is defined in Equation (4.42). Differentiating L with respect to x, integrating L with respect to t and noting that y is a constant yields the following result (neglecting constants)

$$\frac{1}{K}\sum_m\sum_n [t+\frac{e^{-c1t}-1}{c1}]\frac{\beta_m}{c1}\cos(\beta_m x) \tag{4.43}$$

$$-\alpha_t \sum_m \sum_{2n-1} \frac{2\beta_m^2}{\eta_n}\cos(\beta_m x)[F_4(b)-F_4(0)]\frac{e^{-pt}}{(c1-p)p}$$

$$+\alpha_t \sum_m \sum_{2n-1} (-1)^m \frac{2\beta_m^2}{\eta_n}\cos(\beta_m x)[F_2(b)-F_2(0)]\frac{e^{-pt}}{(c1-p)p}$$

$$-\alpha_t \sum_{2m-1} \sum_n 2\eta_n \cos(\beta_m x)[F_1(a)-F_1(0)]\frac{e^{-pt}}{(c1-p)p}$$

$$+\alpha_t \sum_{2m-1} \sum_n (-1)^n 2\eta_n \cos(\beta_m x)[F_3(a)-F_3(0)]\frac{e^{-pt}}{(c1-p)p}$$

In Equation (4.43), $F_4(b)e^{-p\ t}$ and similar terms represent the corner temperatures. It is also known that

$$\cos(\beta_m x) = 1 - \frac{(\beta_m x)^2}{2} + \frac{(\beta_m x)^4}{24} \ldots\ldots \qquad (4.44)$$

Substituting the Equation (4.44) in (4.43), it is seen that $\int_0^t \frac{\partial L}{\partial x}$ can be represented as a function of the corner temperatures and the heat source point. Carrying out the same analysis on all six plates that make up a box, it will be seen that temperatures of all 8 corner points will be required. To carry out the process of monitoring temperatures, it will be necessary to place thermocouples at the corner points as well as on the heat source points.

The second term Q is known to be

$$\nabla^2 Q = \frac{g}{k}\delta(x-x_1)\delta(y-y_1)$$

The solution of this equation will contain terms of the form $\delta(x-x_1), \delta(y-y_1)$ and polynominals of x and y.

The last term $u^{2(k)}$, is the contribution of the isothermal part of the problem. The isothermal problem is defined by Equations (4.23). By assuming a potential of the form

$$u = \frac{\partial \phi}{\partial x}$$
$$v = \frac{\partial \phi}{\partial y}$$
$$w = \frac{\partial \phi}{\partial z}$$

the isothermal problem reduces to

$$\nabla^2 \frac{\partial \phi}{\partial x} = 0 \qquad (4.45)$$

$$\nabla^2 \frac{\partial \phi}{\partial y} = 0$$
$$\nabla^2 \frac{\partial \phi}{\partial z} = 0$$

An approximate solution to the problem is given as

$$\phi = ax^2+by^2+cz^2+dxy+fyz+gzx \qquad (4.46)$$

This solution will satisfy the isothermal problem, and the boundary conditions (4.26) will help determine the constants of the Equation (4.46). u is evaluated to be

$$u = 2\ ax+dy+gz \qquad (4.47)$$

since u is required only as variable in x (y,z being constants), the Equation (4.47) will reduce to

$$u = 2\ ax+k \qquad (4.48)$$

In Equation (4.48), k is some constant. It should be noted that the isothermal problem is mainly concerned with inclusion of boundary conditions. It is known from Saint-Venant's principle, that these influences will be local and so they can be neglected without significantly affecting dispacements and stresses at far away points.

Adding the three terms of the Equation (4.30), it is evident that the displacements can be represented as linear function of the temperatures. A typical function is given below, Equation (4.49)

$$u = a + b\ \Sigma T_i + cx\ \Sigma T_i \ldots\ldots \qquad (4.49)$$

In the Equation (4.49), the terms a, b,c...., are to be determined from simple regression equations, while the

T_i terms are the temperatures measured at the corners and at the heat sources. Due to the existence of such simple regression equations, it is possible to predict errors as a function of temperatures. An objectives of chapter 3 is to show that such regression equations exist based on numerically computed results. Chapter 5 presents experimental evidence to show that expressions like Equation (4.49) can be obtained for complex machine tools.

4.3 Heat Conduction in a Cube

The problem is to solve the heat conduction equation in a cube made of thin plates. Figure (4.3) shows the cube and the conventions used. The cube is assumed to be in a medium at zero degrees. Define the following, Figure (4.3)

$T_{1,0}$ = Temperature at x = 0 plane

$T_{1,a}$ = Temperature at x = a plane

$T_{2,0}$ = Temperature at y = 0 plane

$T_{2,b}$ = Temperature at y = a plane

$T_{3,0}$ = Temperature at z = 0 plane

$T_{3,c}$ = Temperature at z = a plane

The problem to be solved is defined as follows

$$\frac{\partial^2 T_{1,0}}{\partial y^2} + \frac{\partial^2 T_{1,0}}{\partial z^2} - \beta\, T_{1,0} = \frac{1}{\alpha_t}\frac{\partial T_{1,0}}{\partial t} \qquad (4.50)$$

$$\frac{\partial^2 T_{1,a}}{\partial y^2} + \frac{\partial^2 T_{1,a}}{\partial z^2} - \beta\, T_{1,a} = \frac{1}{\alpha_t}\frac{\partial T_{1,a}}{\partial t}$$

$$\frac{\partial^2 T_{2,0}}{\partial x^2} + \frac{\partial^2 T_{2,0}}{\partial z^2} - \beta\, T_{2,0} = \frac{1}{\alpha_t}\frac{\partial T_{2,0}}{\partial t}$$

$$\frac{\partial^2 T_{2,b}}{\partial x^2} + \frac{\partial^2 T_{2,b}}{\partial z^2} - \beta\, T_{2,b} = \frac{1}{\alpha_t}\frac{\partial T_{2,b}}{\partial t}$$

$$\frac{\partial^2 T_{3,0}}{\partial x^2} + \frac{\partial^2 T_{3,0}}{\partial y^2} - \beta\, T_{3,0} = \frac{1}{\alpha_t}\frac{\partial T_{3,0}}{\partial t}$$

$$\frac{\partial^2 T_{3,c}}{\partial x^2} + \frac{\partial^2 T_{3,c}}{\partial y^2} - \beta\, T_{3,c} = \frac{1}{\alpha_t}\frac{\partial T_{3,c}}{\partial t}$$

In Equations (4.50), β is $\frac{h}{K}$, where h is the heat transfer coefficient and K is the thermal conductivity. α_t, is $\frac{K}{\rho * c_p}$. Where ρ is density and c_p is heat capacity. The boundary conditions are

$$T_{1,0}(0,z) = T_{2,0}(0,z) \tag{4.51}$$

$$-\frac{\partial T_{1,0}}{\partial y}(0,z) = \frac{\partial T_{2,0}}{\partial x}(0,z)$$

$$T_{1,0}(a,z) = T_{2,b}(0,z)$$

$$\frac{\partial T_{1,0}}{\partial y}(a,z) = \frac{\partial T_{2,b}}{\partial x}(0,z)$$

$$T_{2,0}(a,z) = T_{1,a}(0,z)$$

$$\frac{\partial T_{2,0}}{\partial x}(a,z) = \frac{\partial T_{1,a}}{\partial y}(0,z)$$

$$T_{2,b}(a,z) = T_{1,a}(a,z)$$

$$-\frac{\partial T_{2,b}}{\partial x}(a,z) = \frac{\partial T_{1,a}}{\partial y}(a,z)$$

$$T_{1,0}(y,0) = T_{3,0}(0,y)$$

$$-\frac{\partial T_{1,0}}{\partial z}(y,0) = \frac{\partial T_{3,0}}{\partial x}(0,y)$$

$$T_{1,0}(y,a) = T_{3,c}(0,y)$$

$$\frac{\partial T_{1,0}}{\partial z}(y,a) = \frac{\partial T_{3,c}}{\partial x}(0,y)$$

$0 < X < a$
$0 < Y < a$
$0 < Z < a$

$T_{1,0}(y,z)$ = Temp. on plane x = 0.

$T_{1,a}(y,z)$ = Temp. on plane x = a.

$T_{2,0}(x,z)$ = Temp. on plane y = 0.

$T_{2,b}(x,z)$ = Temp. on plane y = a.

$T_{3,0}(x,y)$ = Temp. on plane z = 0.

$T_{3,c}(x,y)$ = Temp. on plane z = a.

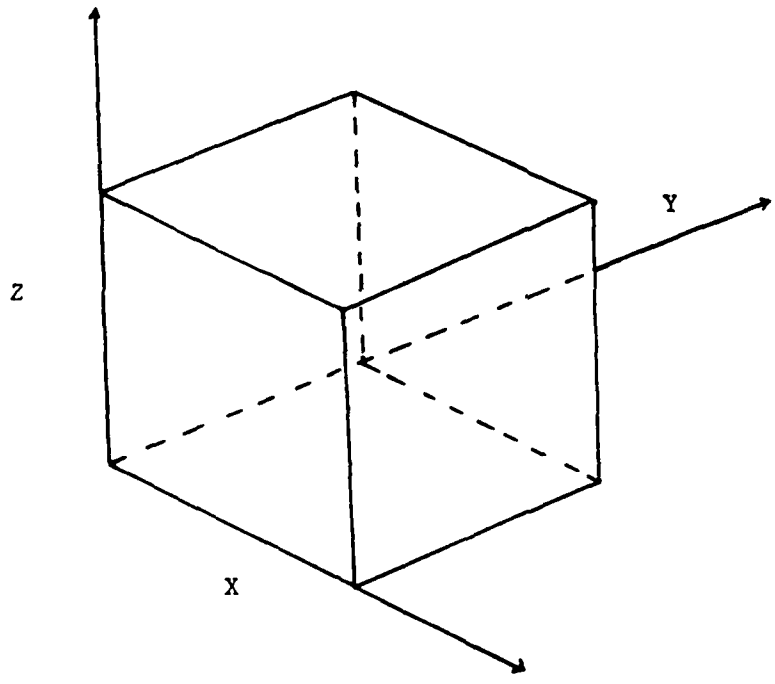

Fig. 4.3 Conventions On Cube

$$T_{3,0}(a,y) = T_{1,a}(y,0)$$
$$\frac{\partial T_{3,0}}{\partial x}(a,y) = \frac{\partial T_{1,a}}{\partial z}(y,0)$$
$$T_{3,c}(a,y) = T_{1,a}(y,a)$$
$$-\frac{\partial T_{3,c}}{\partial x}(a,y) = \frac{\partial T_{1,a}}{\partial z}(y,a)$$
$$T_{2,0}(x,0) = T_{3,0}(x,0)$$
$$-\frac{\partial T_{2,0}}{\partial z}(x,0) = \frac{\partial T_{3,0}}{\partial y}(x,0)$$
$$T_{2,0}(x,a) = T_{3,c}(x,0)$$
$$\frac{\partial T_{2,0}}{\partial z}(x,a) = \frac{\partial T_{3,c}}{\partial y}(x,0)$$
$$T_{3,0}(x,a) = T_{2,b}(x,0)$$
$$\frac{\partial T_{3,0}}{\partial y}(x,a) = \frac{\partial T_{2,b}}{\partial z}(x,0)$$
$$T_{3,c}(x,a) = T_{2,b}(x,a)$$
$$-\frac{\partial T_{3,c}}{\partial y}(x,a) = \frac{\partial T_{2,b}}{\partial z}(x,a)$$

To simplify the problem, the β term in Equations (4.50) is factorized out by the substitution

$$L = T\, e^{\alpha_t \beta t} \tag{4.52}$$

Using Equation (4.52), in Equation (4.50), it is seen that Equation (4.50), reduces to

$$\frac{\partial^2 L_{1,0}}{\partial y^2} + \frac{\partial^2 L_{1,0}}{\partial z^2} = \frac{1}{\alpha_t}\frac{\partial L_{1,0}}{\partial t} \tag{4.53}$$
$$\frac{\partial^2 L_{1,a}}{\partial y^2} + \frac{\partial^2 L_{1,a}}{\partial z^2} = \frac{1}{\alpha_t}\frac{\partial L_{1,a}}{\partial t}$$
$$\frac{\partial^2 L_{2,0}}{\partial x^2} + \frac{\partial^2 L_{2,0}}{\partial z^2} = \frac{1}{\alpha_t}\frac{\partial L_{2,0}}{\partial t}$$
$$\frac{\partial^2 L_{2,b}}{\partial x^2} + \frac{\partial^2 L_{2,b}}{\partial z^2} = \frac{1}{\alpha_t}\frac{\partial L_{2,b}}{\partial t}$$

$$\frac{\partial^2 L_{3,0}}{\partial x^2} + \frac{\partial^2 L_{3,0}}{\partial y^2} = \frac{1}{\alpha_t}\frac{\partial L_{3,0}}{\partial t}$$

$$\frac{\partial^2 L_{3,c}}{\partial x^2} + \frac{\partial^2 L_{3,c}}{\partial y^2} = \frac{1}{\alpha_t}\frac{\partial L_{3,c}}{\partial t}$$

The boundary conditions defined by Equations (4.51), remain the same, but the term T is replaced by L.

The problem defined by Equations (4.53), is represented in the form of an operator as

$$O = \begin{vmatrix} -\frac{\partial^2}{\partial y^2} - \frac{\partial^2}{\partial z^2} & 0 & 0 \\ 0 & -\frac{\partial^2}{\partial z^2} - \frac{\partial^2}{\partial x^2} & 0 \\ 0 & 0 & -\frac{\partial^2}{\partial x^2} - \frac{\partial^2}{\partial y^2} \end{vmatrix} \quad (4.54)$$

The domain of the operator is

D(O) = All functions satisfying boundary conditions (4.51)

also

$$\underline{O} = [O, D(O)] \quad (4.55)$$

The under bar is used in Equation (4.55), to indicate that it is a vector. The temperatures are written in the form of a matrix as

$$\underline{L} = \begin{vmatrix} L_{1,0} & L_{1,a} \\ L_{2,0} & L_{2,b} \\ L_{3,0} & L_{3,c} \end{vmatrix} \quad (4.56)$$

The whole problem is conveniently defined as

$$\frac{1}{\alpha_t}\frac{\partial}{\partial t}\ \underline{L} = -O\ \ \underline{L} \tag{4.57}$$

Equation (4.57) is written as

$$\frac{1}{\alpha_t}\frac{\partial}{\partial t}\ \langle \underline{L},\ \underline{U}\rangle = -\langle\ O\ \underline{L}\ ,\ \underline{U}\ \rangle \tag{4.58}$$

The α_t term is absorbed into time and is written as $\tau = \alpha_t\ t$ Now the Equation (4.58), is written as

$$\frac{\partial}{\partial \tau}\langle\ \underline{L},\ \underline{U}\rangle = -\langle\ O\ \underline{L}\ ,\ \underline{U}\ \rangle \tag{4.59}$$

Equation (4.59) is simplified to give

$$\frac{\partial}{\partial \tau}\langle \underline{L},\underline{U}\rangle = -\lambda\ \langle\ \underline{L}\ ,\ \underline{U}\ \rangle$$

The above Equation is possible because

$$\langle O\ \underline{L},\underline{U}\rangle = \langle \underline{L},O\underline{U}\rangle = \lambda\langle \underline{L},\underline{U}\rangle$$

The inner product for the operator O is written as

$$\begin{aligned}\langle \underline{U}\ ,\ \underline{V}\rangle = &\int_0^a\int_0^a [U_{1,0}V_{1,0}+U_{1,a}V_{1,a}]dydz+ \\ &\int_0^a\int_0^a [U_{2,0}V_{2,0}+U_{2,b}V_{2,b}]dxdz+ \\ &\int_0^a\int_0^a [U_{3,0}V_{3,0}+U_{3,c}V_{3,c}]dxdy\end{aligned} \tag{4.60}$$

In Equations (4.60), U, V are eigen functions. The operator O is self adjoint because [47],

$$\langle O\ \underline{U}\ ^{\bullet}\ \underline{V}\rangle = \langle \underline{U}\ ^{\bullet}\ O\ \underline{V}\rangle \tag{4.61}$$

To show that the Equation (4.61) is true, boundary conditions (4.51) are required. Also in Equation (4.61), the term $\langle O\ \underline{U}\ ^{\bullet}\ \underline{V}\rangle$ is defined in terms of the inner product as

$$\int_0^a\int_0^a - \left[\frac{\partial^2 U_{1,0}}{\partial y^2}+\frac{\partial^2 U_{1,0}}{\partial z^2}\right]V_{1,0}\,dy\,dz \tag{4.62}$$

$$- \left[\frac{\partial^2 U_{1,a}}{\partial y^2}+\frac{\partial^2 U_{1,a}}{\partial z^2}\right]V_{1,a}\,dy\,dz$$

$$+ \int_0^a\int_0^a - \left[\frac{\partial^2 U_{2,0}}{\partial x^2}+\frac{\partial^2 U_{2,0}}{\partial z^2}\right]V_{2,0}\,dx\,dz$$

$$- \left[\frac{\partial^2 U_{2,b}}{\partial x^2}+\frac{\partial^2 U_{2,b}}{\partial z^2}\right]V_{2,b}\,dx\,dz$$

$$+ \int_0^a\int_0^a - \left[\frac{\partial^2 U_{3,0}}{\partial x^2}+\frac{\partial^2 U_{3,0}}{\partial y^2}\right]V_{3,0}\,dx\,dy$$

$$- \left[\frac{\partial^2 U_{3,c}}{\partial x^2}+\frac{\partial^2 U_{3,c}}{\partial y^2}\right]V_{3,c}\,dx\,dy$$

A good overview of linear operator theory as applied to heat and mass transfer is provided in [47]. Applying separation of variables, and defining the following

$$\begin{aligned} U_{1,0} &= Y_{1,0}Z_{1,0} \\ U_{2,0} &= X_{2,0}Z_{2,0} \\ U_{3,0} &= X_{3,0}Y_{3,0} \\ U_{1,a} &= Y_{1,a}Z_{1,a} \\ U_{2,b} &= X_{2,b}Z_{2,b} \\ U_{3,c} &= X_{3,c}Y_{3,c} \end{aligned} \tag{4.63}$$

The boundary conditions in the separated form is written as

$$\begin{aligned} Y_{1,0}(0)Z_{1,0} &= X_{2,0}(0)Z_{2,0} \\ -Y'_{1,0}(0)Z_{1,0} &= X'_{2,0}(0)Z_{2,0} \\ Y_{1,0}(a)Z_{1,0} &= X_{2,b}(0)Z_{2,b} \\ Y'_{1,0}(a)Z_{1,0} &= X'_{2,b}(0)Z_{2,b} \end{aligned} \tag{4.64}$$

$$X_{2,0}(a)Z_{2,0} = Y_{1,a}(0)Z_{1,a}$$
$$X'_{2,0}(a)Z_{2,0} = Y'_{1,a}(0)Z_{1,a}$$
$$X_{2,b}(a)Z_{2,b} = Y_{1,a}(a)Z_{1,a}$$
$$-X'_{2,b}(a)Z_{2,b} = Y'_{1,a}(a)Z_{1,a}$$
$$Y_{1,0}Z_{1,0}(0) = X_{3,0}(0)Y_{3,0}$$
$$-Y_{1,0}Z'_{1,0}(0) = X'_{3,0}(0)Y_{3,0}$$
$$Y_{1,0}Z_{1,0}(a) = X_{3,c}(0)Y_{3,c}$$
$$Y_{1,0}Z'_{1,0}(a) = X'_{3,c}(0)Y_{3,c}$$
$$X_{3,0}(a)Y_{3,0} = Y_{1,a}Z_{1,a}(0)$$
$$X'_{3,0}(a)Y_{3,0} = Y_{1,a}Z'_{1,a}(0)$$
$$X_{3,c}(a)Y_{3,c} = Y_{1,a}Z_{1,a}(a)$$
$$-X'_{3,c}(a)Y_{3,c} = Y_{1,a}Z'_{1,a}(a)$$
$$X_{2,0}Z_{2,0}(0) = X_{3,0}Y_{3,0}(0)$$
$$-X_{2,0}Z'_{2,0}(0) = X_{3,0}Y'_{3,0}(0)$$
$$X_{2,0}Z_{2,0}(a) = X_{3,c}Y_{3,c}(0)$$
$$X_{2,0}Z'_{2,0}(a) = X_{3,c}Y'_{3,c}(0)$$
$$X_{3,0}Y_{3,0}(a) = X_{2,b}Z_{2,b}(0)$$
$$X_{3,0}Y'_{3,0}(a) = X_{2,b}Z'_{2,b}(0)$$
$$X_{3,c}Y_{3,c}(a) = X_{2,b}Z_{2,b}(a)$$
$$-X_{3,c}Y'_{3,c}(a) = X_{2,b}Z'_{2,b}(a)$$

In Equations (4.64), the prime indicates differentiation. From Equations (4.64), it is apparent that

$$\frac{X''_{2,0}}{X_{2,0}} = \frac{X''_{2,b}}{X_{2,b}} = \frac{X''_{3,c}}{X_{3,c}} = \frac{X''_{3,c}}{X_{3,c}} = \mu^2 \quad (4.65)$$
$$\frac{Y''_{1,0}}{Y_{1,0}} = \frac{Y''_{1,a}}{Y_{1,b}} = \frac{Y''_{3,c}}{Y_{3,c}} = \frac{Y''_{3,c}}{Y_{3,c}} = \eta^2$$

$$\frac{Z''_{1,0}}{Z_{1,0}} = \frac{Z''_{1,a}}{Z_{1,b}} = \frac{Z''_{2,b}}{Z_{2,b}} = \frac{Z''_{2,b}}{Z_{2,b}} = \delta^2$$

But it is also known that [47]

$$O\underline{U} = \lambda\ \underline{U} \tag{4.66}$$

Substituting the Equation (4.65), in (4.66), it is seen that

$$\eta^2 + \delta^2 = \lambda \tag{4.67}$$
$$\mu^2 + \delta^2 = \lambda$$
$$\mu^2 + \eta^2 = \lambda$$

Equations (4.67), indicate that $\mu^2 = \eta^2 = \delta^2$. This leads to the conclusion that

$$\lambda = 2\mu^2 \tag{4.68}$$

The assumed solution is written out as

$$X_{2,0} = \xi^a_{2,0}\cos(\mu x) + \xi^b_{2,0}\sin(\mu x) \tag{4.69}$$
$$X_{2,b} = \xi^a_{2,b}\cos(\mu x) + \xi^b_{2,b}\sin(\mu x)$$
$$X_{3,0} = \xi^a_{3,0}\cos(\mu x) + \xi^b_{3,0}\sin(\mu x)$$
$$X_{3,c} = \xi^a_{3,c}\cos(\mu x) + \xi^b_{3,c}\sin(\mu x)$$
$$Y_{1,0} = \eta^a_{1,0}\cos(\mu y) + \eta^b_{1,0}\sin(\mu y)$$
$$Y_{1,a} = \eta^a_{1,a}\cos(\mu y) + \eta^b_{1,a}\sin(\mu y)$$
$$Y_{3,0} = \eta^a_{3,0}\cos(\mu y) + \eta^b_{3,0}\sin(\mu y)$$
$$Y_{3,c} = \eta^a_{3,c}\cos(\mu y) + \eta^b_{3,c}\sin(\mu y)$$
$$Z_{1,0} = \zeta^a_{1,0}\cos(\mu z) + \zeta^b_{1,0}\sin(\mu z)$$
$$Z_{1,a} = \zeta^a_{1,a}\cos(\mu z) + \zeta^b_{1,a}\sin(\mu z)$$
$$Z_{2,0} = \zeta^a_{2,0}\cos(\mu z) + \zeta^b_{2,0}\sin(\mu z)$$
$$Z_{2,b} = \zeta^a_{2,b}\cos(\mu z) + \zeta^b_{2,b}\sin(\mu z)$$

Also from the boundary conditions it is known that

$$\frac{Z_{1,0}}{Z_{2,0}} = c \tag{4.70}$$

$$\frac{Z_{1,0}}{Z_{2,b}} = c1$$

$$\frac{Z_{2,0}}{Z_{1,a}} = c2$$

$$\frac{Z_{2,b}}{Z_{1,a}} = c3$$

In Equation (4.70), c, c1, c2 and c3 are some constants. Due to the conditions defined in Equation (4.64), it is seen that

$$\frac{\zeta^a_{1,0}}{\zeta^b_{1,0}} = \frac{\zeta^a_{1,a}}{\zeta^b_{1,a}} = \frac{\zeta^a_{2,0}}{\zeta^b_{2,0}} = \frac{\zeta^a_{2,b}}{\zeta^b_{2,b}} = k_z \tag{4.71}$$

Similarly for x,y it is seen that

$$\frac{\eta^a_{1,0}}{\eta^b_{1,0}} = \frac{\eta^a_{1,a}}{\eta^b_{1,a}} = \frac{\eta^a_{3,0}}{\eta^b_{3,0}} = \frac{\eta^a_{3,c}}{\eta^b_{3,c}} = k_y \tag{4.72}$$

$$\frac{\xi^a_{2,0}}{\xi^b_{2,0}} = \frac{\xi^a_{2,b}}{\xi^b_{2,b}} = \frac{\xi^a_{3,0}}{\xi^b_{3,0}} = \frac{\xi^a_{3,c}}{\xi^b_{3,c}} = k_z$$

Due to the simplification offered by Equations (4.71) and(4.72), the assumed solution is written out as

$$U_{1,0} = K_{1,0}(\cos(\mu y) + k_y \sin(\mu y))(\cos(\mu z) + k_z \sin(\mu z)) \tag{4.73}$$

$$U_{1,a} = K_{1,a}(\cos(\mu y) + k_y \sin(\mu y))(\cos(\mu z) + k_z \sin(\mu z))$$

$$U_{2,0} = K_{2,0}(\cos(\mu x) + k_x \sin(\mu x))(\cos(\mu z) + k_z \sin(\mu z))$$

$$U_{2,b} = K_{2,b}(\cos(\mu x) + k_x \sin(\mu x))(\cos(\mu z) + k_z \sin(\mu z))$$

$$U_{3,0} = K_{3,0}(\cos(\mu x) + k_x \sin(\mu x))(\cos(\mu y) + k_y \sin(\mu y))$$

$$U_{3,c} = K_{3,c}(\cos(\mu x)+k_x\sin(\mu x))(\cos(\mu y)+k_y\sin(\mu y))$$

In Equations (4.73), the terms $K_{1,0}$, $K_{1,a}$,$K_{3,0}$, $K_{1,a}$,$K_{2,b}$ and $K_{3,c}$ are constants to be determined. Using boundary conditions, it is seen that the eigen values are

$$\sin(\mu a) = 0 \text{ ie } \mu = \frac{n\pi}{a}; n = 0,1,2,\ldots\ldots \tag{4.74}$$

The constants are

$$K_{1,0} = K_{2,0} = K_{3,0} = 1 \tag{4.75}$$

and

$$K_{1,a} = K_{2,b} = K_{3,c} = (-1)^n$$

It is also seen that another solution exists, for $\lambda = 0$. This solution is obtained by solving

$$\begin{aligned} U_{1,0} &= a_1 + a_2y + a_3z + a_4yz \\ U_{1,a} &= a_5 + a_6y + a_7z + a_8yz \\ U_{2,0} &= a_9 + a_{10}x + a_{11}z + a_{12}xz \\ U_{2,b} &= a_{13} + a_{14}x + a_{15}z + a_{16}xz \\ U_{3,0} &= a_{17} + a_{18}x + a_{19}y + a_{20}xy \\ U_{3,c} &= a_{21} + a_{22}x + a_{23}y + a_{24}xy \end{aligned} \tag{4.76}$$

In Equations (4.76), the terms a_1,a_2..... are constants to be determined. Application of boundary conditions shows

$$a_1 = a_5 = a_9 = a_{13} = a_{17} = a_{21} \tag{4.77}$$

The normalizing constant is calculated as [47] :

For the constant term, the normalizing constant is

$$N = \int_0^a\int_0^a dydz + \int_0^a\int_0^a dydz + \int_0^a\int_0^a dxdz \tag{4.78}$$
$$+ \int_0^a\int_0^a dxdz + \int_0^a\int_0^a dxdy + \int_0^a\int_0^a dxdy$$

For the cosine terms, it is

$$N1 = \int_0^a\int_0^a \cos^2(\mu y)\cos^2(\mu z)dydz \tag{4.79}$$
$$+ \int_0^a\int_0^a \cos^2(\mu y)\cos^2(\mu z)dydz$$
$$+ \int_0^a\int_0^a \cos^2(\mu x)\cos^2(\mu z)dxdz$$
$$+ \int_0^a\int_0^a \cos^2(\mu x)\cos^2(\mu z)dxdz$$
$$+ \int_0^a\int_0^a \cos^2(\mu x)\cos^2(\mu y)dxdy$$
$$+ \int_0^a\int_0^a \cos^2(\mu x)\cos^2(\mu y)dxdy$$

The terms are evaluated to be

$$N = 6a^2 \tag{4.80}$$

and

$$N1 = 6a^2/4 \tag{4.81}$$

The solution is now written out as

$$L_{1,0} = \frac{C}{N} + \sum_{n=1}^{\infty} \frac{C_n}{N1}\cos(\mu y)\cos(\mu z)e^{-2\mu^2\alpha_t t} \tag{4.82}$$
$$L_{1,a} = \frac{C}{N} + \sum_{n=1}^{\infty} (-1)^n\frac{C_n}{N1}\cos(\mu y)\cos(\mu z)e^{-2\mu^2\alpha_t t}$$

$$L_{2,0} = \frac{C}{N} + \sum_{n=1}^{\infty} \frac{C_n}{Nl}\cos(\mu x)\cos(\mu z)e^{-2\mu^2\alpha_t t}$$

$$L_{2,b} = \frac{C}{N} + \sum_{n=1}^{\infty} (-1)^n\frac{C_n}{Nl}\cos(\mu x)\cos(\mu z)e^{-2\mu^2\alpha_t t}$$

$$L_{3,0} = \frac{C}{N} + \sum_{n=1}^{\infty} \frac{C_n}{Nl}\cos(\mu x)\cos(\mu y)e^{-2\mu^2\alpha_t t}$$

$$L_{3,c} = \frac{C}{N} + \sum_{n=1}^{\infty} (-1)^n\frac{C_n}{Nl}\cos(\mu x)\cos(\mu y)e^{-2\mu^2\alpha_t t}$$

The temperature is obtained in terms of T from Equations (4.82), by simply multiplying each of them by $e^{-\alpha_t \beta t}$. The solution in terms of T is given as

$$T_{1,0} = \frac{C}{N}e^{-\beta\alpha_t t} + \sum_{n=1}^{\infty} \frac{C_n}{Nl}\cos(\mu y)\cos(\mu z)e^{-(2\mu^2+\beta)\alpha_t t} \tag{4.83}$$

$$T_{1,a} = \frac{C}{N}e^{-\beta\alpha_t t} + \sum_{n=1}^{\infty} (-1)^n\frac{C_n}{Nl}\cos(\mu y)\cos(\mu z)e^{-(2\mu^2+\beta)\alpha_t t}$$

$$T_{2,0} = \frac{C}{N}e^{-\beta\alpha_t t} + \sum_{n=1}^{\infty} \frac{C_n}{Nl}\cos(\mu x)\cos(\mu z)e^{-(2\mu^2+\beta)\alpha_t t}$$

$$T_{2,b} = \frac{C}{N}e^{-\beta\alpha_t t} + \sum_{n=1}^{\infty} (-1)^n\frac{C_n}{Nl}\cos(\mu x)\cos(\mu z)e^{-(2\mu^2+\beta)\alpha_t t}$$

$$T_{3,0} = \frac{C}{N}e^{-\beta\alpha_t t} + \sum_{n=1}^{\infty} \frac{C_n}{Nl}\cos(\mu x)\cos(\mu y)e^{-(2\mu^2+\beta)\alpha_t t}$$

$$T_{3,c} = \frac{C}{N}e^{-\beta\alpha_t t} + \sum_{n=1}^{\infty} (-1)^n\frac{C_n}{Nl}\cos(\mu x)\cos(\mu y)e^{-(2\mu^2+\beta)\alpha_t t}$$

In Equations (4.83), the constants C and C_n have to be evaluated. These constants are obtained from the initial temperature conditions. Let the initial temperature condition, $\underline{T}_0$ be

$$\underline{T}_0 = \begin{vmatrix} F_{1,0} & F_{1,a} \\ F_{2,0} & F_{2,b} \\ F_{3,0} & F_{3,c} \end{vmatrix} \tag{4.84}$$

In Equations (4.84), the functions F are defined over the respective regions of interest. The constant C is evaluated as follows

$$\begin{aligned} C = & \int_0^a\int_0^a [F_{1,0} + F_{1,0}]dydz \\ & + \int_0^a\int_0^a [F_{2,0} + F_{2,b}]dxdz \\ & + \int_0^a\int_0^a [F_{3,0} + F_{3,c}]dxdy \end{aligned} \tag{4.85}$$

The constant Cl is obtained as

$$\begin{aligned} Cl = & \int_0^a\int_0^a [F_{1,0}\cos(\mu y)\cos(\mu z) \\ & \qquad + F_{1,a}(-1)^n\cos(\mu y)\cos(\mu z)]dydz \\ & + \int_0^a\int_0^a [F_{2,0}\cos(\mu x)\cos(\mu z) \\ & \qquad + F_{2,b}(-1)^n\cos(\mu x)\cos(\mu z)]dxdz \\ & + \int_0^a\int_0^a [F_{3,0}\cos(\mu x)\cos(\mu y) \\ & \qquad + {}_{3,c}(-1)^n\cos(\mu x)\cos(\mu y)]dxdy \end{aligned} \tag{4.86}$$

All the above constants are calculated over the inner

product. The calculation of the constants C and C1 are written symbolically as $\langle \underline{T}_0, U_i \rangle$, where $\underline{T}_0$ is the vector denoting the initial temperature condition. To incorporate heat sources, the constants C and C1 are calculated from [47],

$$\int_0^{\tau} \langle \underline{Q}, \underline{U}_i \rangle e^{-\lambda^2(\tau-\xi)} d\xi \tag{4.87}$$

In Equation (4.87), $\underline{Q}$, is the representation of heat sources in the body. This representation is similar to the representation of the initial temperature field $\underline{T}_0$, given in Equation (4.84). In Equation (4.87), the term ξ is an integration constant.

The solution given in Equation (4.83) has restrictions. The initial temperature conditions should satisfy the boundary conditions (4.51). Arbitrary initial conditions cannot be used. Heat sources have to be located symmetrically on each plate. Also it is seen that the solution can be written out in a convenient form as

$$T(x,y,z,t) = \frac{C}{N} e^{-\beta\alpha_t t} + \sum_{n=1}^{\infty} \frac{C_n}{N1} \cos(\mu x)\cos(\mu y)\cos(\mu z) e^{-(2\mu^2+\beta)\alpha_t t} \tag{4.88}$$

The representation as given in equation (4.88), is possible because, $\cos(\mu i)$, $i = x,y$ or z will be zero at $i = 0$ and will be $(-1)^n$ at $i = a$. This concludes the thermal solution.

4.4 Solution of Displacement in a Cube

The thermal field in a cube made of thin plates is presented in equations (4.88). Let u,v and w be the displacements in the directions x,y and z. The boundary conditions for the displacements equations are defined at the 4 corner points on the base. This condition is written out as (4.89) :

$$u = v = w = 0 \qquad (4.89)$$

$$\text{at } (0,0,0),\ (0,a,0),\ (a,0,0),\ (a,a,0)$$

The solution of the displacements problem is composed of two parts. One is the direct solution of the thermal problem and the other is the solution of the isothermal problem with the boundary conditions suitably modified.

For the problem on hand, it is seen that the moments generated on each plate will be zero. Moments are calculated by [7],

$$\text{Moment} = \int_{-h}^{h} Tzdz \qquad (4.90)$$

In equation (4.90), h is the thickness and T is the temperature distribution. Evaluation of moments for T (given by Equation (4.88), indicates that the they are zero. Such situations exist for symmetric loading conditions [7]. Under symmetric loading conditions the main displacements will be inplane and the curvature of the plate will be zero [7]. Solution of the

thermoelastic potential is presented in equation (4.20). For the inplane stress problem, the equation (4.20) will hold, but the term $\frac{(1 + \nu)}{(1 - \nu)}$ will be replaced by $(1 + \nu)$. Equation (4.20) for a source free distribution in terms of T, is

$$\psi = (1 + \nu)\, \alpha_e \alpha_t \int_0^t [\ T\ ]dt \tag{4.91}$$

Substituting equation (4.88), in equation (4.91), it is seen that the potential is written as (4.92) :

$$\psi = (1 + \nu)\, \alpha_e \alpha_t \int_0^t \frac{C}{N} e^{-\beta \alpha_t t} dt + \sum_{n=1}^{\infty} \frac{C_n}{NI} \cos(\mu x)\cos(\mu y)\cos(\mu z) e^{-(2\mu^2+\beta)\alpha_t t} dt \tag{4.92}$$

Without considering edge equilibrium conditions, the displacements are given by

$$u = \frac{\partial \psi}{\partial x} \qquad v = \frac{\partial \psi}{\partial y} \qquad w = \frac{\partial \psi}{\partial z} \tag{4.92}$$

Also for the isothermal problem, it is seen that the displacements at the four corner points of interest are satisfied. This completes solution of the displacement problem. It is seen that the solutions obtained are very restrictive and much more work has to be done to model heat flow and associated displacement problems in non cubic box type structures.

CHAPTER 5. EXPERIMENTAL WORK

5.1 General

This chapter is primarily concerned with experimental work. The type of experiments conducted, results obtained as well as the comparison of experimental and numerical work will be discussed in this chapter. Essentially a numerically controlled machine tool is taken as a test machine. The machine used for experimental work resembles the one shown in Figure 1.2. The idea is to see if the theory built up till now will hold under experimental conditions. The main intention of the experimental work is to see if thermal effects on the accuracy of machine tools can be predicted by monitoring the temperature of a few points located on the machine tool. Errors of interest are the geometric and kinematic errors of each of the axes of the machine tool. Of the errors studied, three are linear and three are angular. In all eighteen errors have been measured and studied. At the onset it should be mentioned that the straightness errors as measured are different from errors that are computed by the methods of Chapter 3. In Chapter 3, computed errors are

not corrected for slope. Slope is the angle associated with the error. It is a measure of the rate of change in error with position. Measured errors on the other hand, are presented without this slope component. This is in accordance with the recommendations of [52]. It is also apparent that this slope is a measure of non orthogonality. In fact squareness error is measured based on the difference of the slopes of two perpendicular axis [52].

Broadly speaking, the chapter is split into two parts, the first is concerned with the measurement of machine errors and the other is comparison of numerical and experimental work. Finite element methods are used here again. The prime motivation is to see if experimental results can be duplicated with simple numerical techniques. An excellent review of testing the accuracy of numerically controlled machine tools is presented in [45]. For thermal effects on machine tool accuracy, Mc Clure's thesis [20] is an outstanding piece of work.

5.2 Equipment Used for Measurement of Machine Tool Errors

All experiments are designed to measure the effect of temperature on machine tool errors. A plan of the experimental setup for the measurement of thermal

effects on the accuracy of a machine tool is shown in Figure 5.1. The instrumentation used is divided into two parts.

1. Measurement of temperature

2. Measurement of Errors.

It is known that heat sources are classified into two types, external heat sources and internal heat sources. The environment is probably the largest external heat source. The machine is in large room and is not exposed to direct sunlight. Unfortunately the room has no facilities for control of room temperature and this has mixed blessings. On one hand, the environment is representative of what can be expected in a typical FMS (flexible manufacturing system) and so measured errors are indicative of what can be expected for typical situations. On the other hand, there are no easy techniques to separate the effect of internal heat sources and external heat sources. The temperature of the room is measured by placing four thermometers at four locations around the machine. Resolution of the thermometers is one degree Centigrade. Based on experimental evidence, it was found that the variation in room temperature over time was about one degree Centigrade.

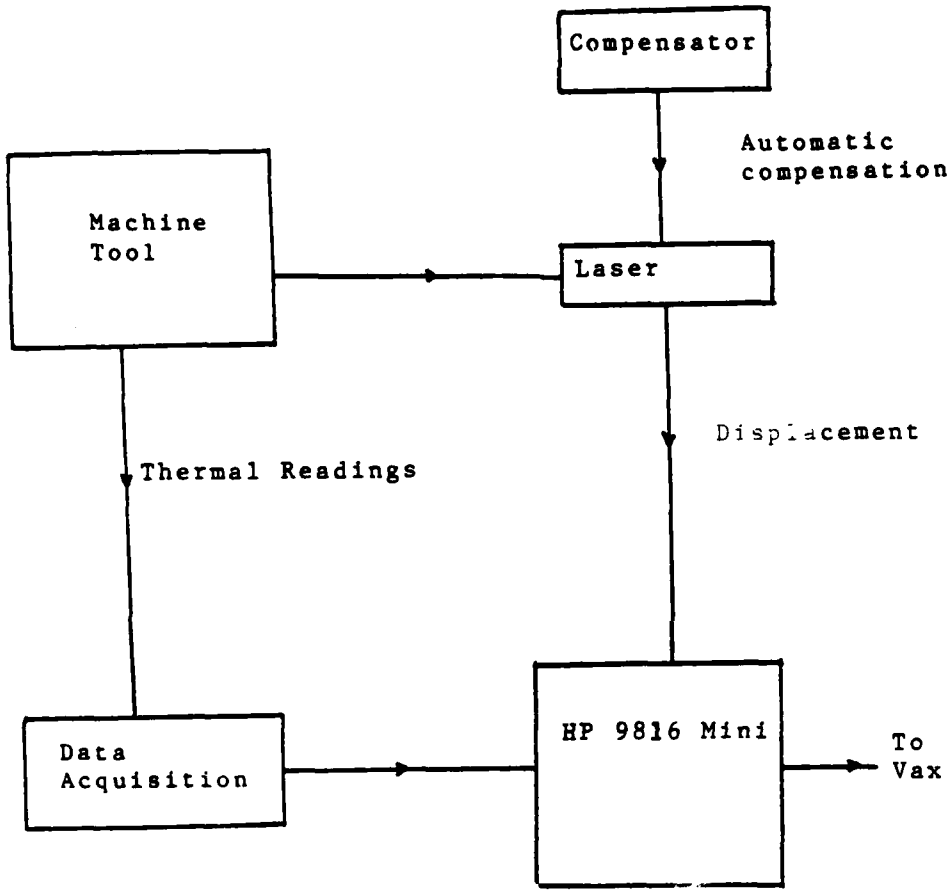

Fig. 5.1 Experimental Setup

Internal heat sources are motors, pumps, heat generated by friction (due to motion) etc. Thermocouples are used for measurement of temperatures induced by internal heat sources. Copper constantan type thermocouples are used. The range of temperatures expected from machine tool activity falls well into the range of linear performance of the copper constantan thermocouple. Thermocouples used are of the shielded variety. Shielded thermocouples are used to cut down external noise. Noise may be an issue because some of the thermocouple leads are as long as 40 meters. Measurement of thermocouple voltage is performed by a Hewlett Packard data acquisition system (3497 A). The system measures voltages using a digital voltmeter and it has a twenty channel relay multiplexer assembly. The multiplexer assembly has an isothermal reference block. The isothermal reference block permits the possibility of using different types of thermocouples in a single multiplexer assembly. Measured voltages are converted to temperatures by a program that resides in the mini computer shown in Figure 5.1.

Temperatures of fifty five points on the machine are measured using thermocouples. Location of these measured points are shown in Appendix 2, Figures A2.1, A2.2 and A2.3. Tables A2.1, A2.2 and A2.3 in Appendix 2 relate the location of each thermocouple to a specific

point on the machine tool. From Tables A2.1, A2.2 and A2.3, it is seen that each heat source has a thermocouple placed on it. Remaining thermocouples are distributed almost evenly on the machine. The thermocouples are glued to the machine by high temperature epoxy. The epoxy holds the thermocouple bead to the machine tool and has very high thermal conductivity. The other approach is to embed the thermocouple bead in a hole. The second approach should offer higher accuracy because the bead is less exposed to the environment. The standard limits of error for the copper constantan thermocouple (type T) is +/- 1 degree Centigrade, based on manufacturer's reports. The data acquisition system accuracy, based on manufacture's reports is better than half a degree Centigrade. A hand held digital thermometer has been used to check the accuracy of the data acquisition system.

Errors of interest are measured using a Hewlett Packard laser measurement system and an electronic level from Federal Products. The laser measurement system consists of a helium-neon gas laser and additional optics for the measurement of individual error components. The optics used depend on the type of error in question. For example, remote interferometer, corner cubes and reflectors are required for measurement of positioning errors. A detailed listing of additional

accessories required is available in the Hewlett Packard Laser manuals [52]. The laser system is capable of measuring better than 0.5 parts per million. This value compares favorably with the best physical standards available and is certainly acceptable for machine tool calibration [41]. Due to variations in the environment and due to random vibrations, it is expected that the accuracy of the laser system will be of the order of 1 micron or better. For measurement of angular errors the laser system has a resolution of one tenth of an arc second.

Laser wavelength depends on the environment and so suitable compensation is necessary. Correction for variations in environmental conditions is achieved by using an automatic compensation device. The device has sensors for measurement of ambient conditions. The conditions of interest are room temperature, barometric pressure and relative humidity. The process of compensation is automatic. The automatic compensation system also has sensors for measuring the temperature of the machine being calibrated. Using measured temperatures, the compensation system corrects for expansion or contraction of the machine. In all the experiments, compensation for machine expansion has not been included. The reason for not doing this is to establish a reference temperature. In the absence of

compensation for machine expansion, the laser assumes that the machine is at 20 degrees Centigrade. This is relevant because automatically a reference temperature is setup. Also it is known that the temperature field is three dimensional and so it is not possible to correct for expansions or contractions caused by a three dimensional thermal field based on 3 or 4 temperature readings.

Measurement of roll is not possible using a laser system. It is accomplished using an electronic level. The level used is from Federal Products. Two levels are used in a differential mode. A differential mode is adopted to cancel out the effect of vibrations. The level has a repetition accuracy of better than half an arc second. The resolution of the electronic level is half an arc second. Here again while performing the experiments, the lowest resolution is not used due to external noise. The estimated accuracy of the level is about 1 arc second.

Figure 5.1, shows a schematic of the experimental setup. The experimental setup is controlled by a Hewlett Packard 9816 mini computer. The computer is interfaced to the data acquisition system by a HP-IB cable. The 9816 is connected to the display of the laser by a BCD interface. Collection of temperature data is independent of laser data. The 9816 has the capability

for up-loading data collected in a experiment to a Vax 11/780 for the purpose of further analysis. Collection of roll errors and room temperature data is manual.

5.3 Experimental Conditions

The test system has three basic features [45]:

1. It is a non-machining system of tests which can be called "tracing of a universal master part".

2. It assumes that individual sources of error and their effects can be, to a reasonable extent, isolated and systematically combined.

3. The tests are formulated from a user's point of view and not from a builder's point of view.

Each of the above features need to be explained. Broadly speaking, testing of machine tools can be split into two classes. They are cutting tests and geometric tests [20]. Both tests provide information but neither are conclusive by themselves. It is not possible to include all types of conditions in cutting tests and so generally it is very difficult to use such tests for identification of error sources. Further cutting tests depend on cutting conditions and fixturing methods and these effects are related to the size and shape of workpiece. Hence it is very difficult to assess what can be optimally achieved [45].

In support of geometric tests, it must be said that they provide information on the sources of error within the machine but are not indicative of the type of process present while cutting. Geometric tests however provide indications on the tolerances that can be achieved by machine tools. From geometric tests, the user knows if a particular machine will meet a certain tolerance or not [20]. Besides this distinction, it is important to keep in mind the type of conditions under which the machine would be required to meet specified tolerances. For example in precision machining (the type under study here), it is known that cutting forces will be almost negligible. This is because precision machining is generally done at high speeds and low feeds. Under conditions of high speed and low feed, cutting forces are generally low and heat generated in the cutting process is taken out by the chip.

In feature 2, it is desirable to know if individual effects can be separated and subsequently superimposed. The main question is, how many of the effects are statistical and how many can be explained using existing knowledge [45]. Of the errors that are under study here, it is known that all of them have both statistical components and systematic components. The identification of the systematic components is important for software compensation [45]. Based on past

experience it is known that the statistical components are relatively small [45].

In feature 3, all tests are from a user's point of view and not from a builder's point of view [45]. The user has different requirements from the builder but both of them are related in one form or the other. The whole test has to be conducted so as to consider the errors of the workpiece resulting from the errors of the machine tool motions. To illustrate the distinction from a builder's point of view, instead of checking straightness of guideways, straightness of motion is checked [45].

Geometric tests have to be capable of measuring effects due to spindle rotation. This is because it is known that heat is generated at spindle bearings, and this has to be considered for evaluating thermal effects on machine tool accuracy. However, the optics associated with the laser system cannot be mounted in a rotating spindle. To account for this additional heat, the machine is heated by artificial heaters. The artificial heaters are placed below the spindle bearings.

Broadly speaking, the approach used here is to split the machine into subsystems, each of which have definite and measurable properties that relate to the accuracy of the machine. The above approach has been

used by many people in the past [20]. For the machine under study, the sub systems are the three axis of the machine, x, y and z, Figure 1.2. Each subsystem is composed of positioning elements and a slide way for the purpose of positioning and guiding the slide. Associated with the positioning elements is the positioning error, while associated with the slide way are straightness errors (horizontal and vertical) and angular errors (pitch, roll and yaw).

The approach is illustrated in Figure 5.2. The workspace of the machine is divided by 3 lines A, B and C. These three lines are mutually perpendicular to one an /other. Six errors are associated with each of these lines. Three of them are angular and three of them are linear. The objective is to measure each of these six errors along all three lines. The table on the z axis of the machine is used as a reference surface for the purpose of locating the three mutually perpendicular axis A,B and C. All errors are measured with respect to a single spot on the table. This spot is that corner of the table closest to (0,0,0) of the machine, Figure 5.2. All errors are measured with respect to a single point on the machine tool table to reduce the possibility of additional errors being introduced in the measurement. Additional errors are possible due to lack of straightness of the table itself.

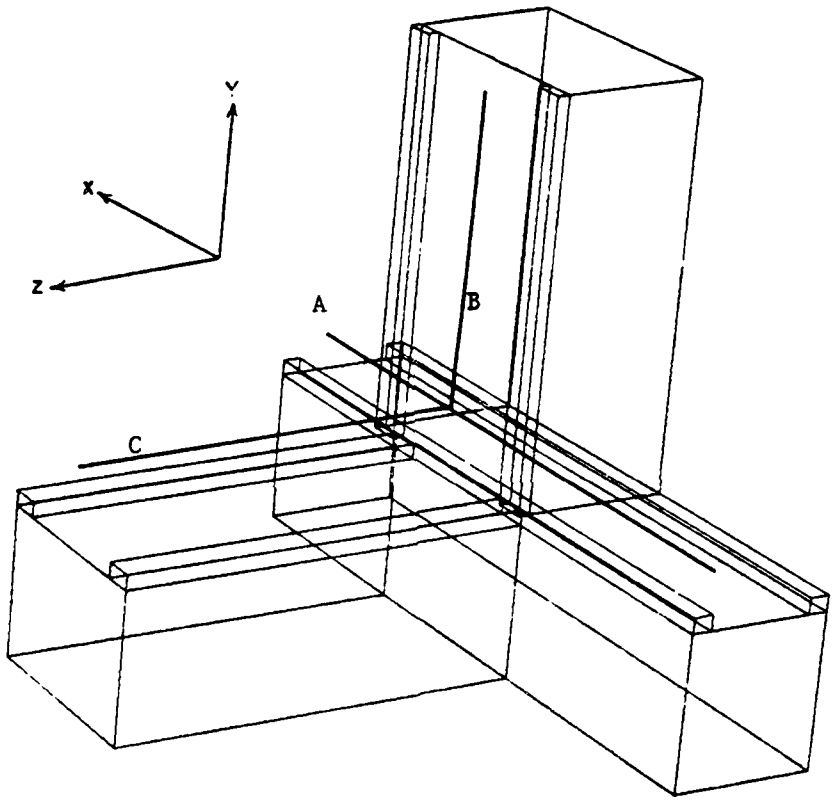

Fig. 5.2 Calibration of Machine Tool [45]

Three factors are important while thermal accuracy of machine tools are studied [20]. They are

1. The thermal environment

2. The affected structure

3. Operating procedure

The thermal environment is composed of all heat sources. As explained earlier, heat sources are generally classified into two types. One type is those heat sources associated with the machine tool itself and the other is heat sources associated with the room. It should be realized that the room itself is probably the largest heat source. Under ideal conditions, the machine would be expected to work in an environment that is at 20 degrees Centigrade. Any change from this would cause the machine's characteristics to change. While such a requirement is ideal, it in generally not possible to hold such conditions except with temperature controlled rooms. For the experiments conducted, the machine is in a room and the temperature of the room is monitored using four accurate thermometers placed around the machine. Because the machine is not exposed to sunlight and based on the experimental data collected, it is seen that the variation of room temperature (over time) is about one degree Centigrade. As explained earlier, temperature of the machine is measured by placing

thermocouples on the structure of the machine.

The process of heating affects the structure which causes the geometric error to change. The purpose of each experiment is to evaluate the effect of change caused by temperature. The operating procedure affects the process of heating and so this is an important factor to be considered.

Each of the eighteen experiments conducted lasted for 10 to 14 hours. During this period, the machine is sent through cycles of heating and cooling. The process of heating and cooling causes the structure to change and these changes present themselves as measurable errors. Each error is measured at as many points as permissible, because the optics take up space. Also, it is not advisable to measure near the end points of travel. Simultaneously thermal readings are taken. Typically each reading consists of a set of temperature measurements and a set of error measurements. The error readings are repeated at least six times at each point of interest (three times up and three time down). All statistical data is based on bidirectional error measurements. Bidirectional error measures include the effect of hysteresis.

During each experiment, once the laser is aligned, it is not turned off. The reason for this is to measure

the cumulative effect of temperature on error. As explained, the laser has a temperature compensation system. Part of the temperature compensation system is to measure the temperature of the body under study. For all experiments, the material temperature compensation is turned off. This is done to establish all errors with respect to some temperature datum. The datum selected is 20 degrees Centigrade. This feature is preset in the system. All errors are measured relative to some specific point (fixed point). Each of these fixed points are specified in Appendix 3, where experimental results are presented. It is known that both fixed point and measured point move, and the objective is to determine the relative displacement or rotation. The relative displacement or rotation is a measure of the error. For further reference on the laser measurement system please consult the appropriate Hewlett Packard manuals. All experiments have been conducted as per recommendations of [52].

5.3.1 Additional Sources of Experimental Error

Of the possible errors of measurement, temperature errors have already been discussed. Errors of the laser system and the electronic level have also been discussed. Other errors include vibrations present in the machine. While performing a straightness test on the y axis, it was observed that the vertical

straightness at any point on the axis fluctuated by about 2 to 4 microns. The source of the vibrations was established as the lubricant pump. The vibrations were reduced by changing the length of the reflector holder. It is also felt that the method of measuring straightness, especially those associated with the vertical axis is extremely complicated. Simpler methods for measuring such errors need to be developed. Roll on the vertical axis (the y axis) is a problem. The electronic level cannot detect out of plane rotations on a vertical axis accurately.

Fixturing the optics on the machine is a problem. The fixturing should be such that it should prevent rotations or displacements and at the same time it should not scratch or harm the optical components in any way. The ideal is make the optics an integral part of the machine components being calibrated.

5.4 Experimental Results

Before experimental results can be presented, error characteristics have to be disussed. A typical error plot is shown in Figure 5.3. With regard to this error plot, certain terms have to described. The terminology described in this paragraph will be used through out the discussion in sections 5.4 and 5.5. Drift is as shown in Figure 5.3. The cause of drift not always clear,

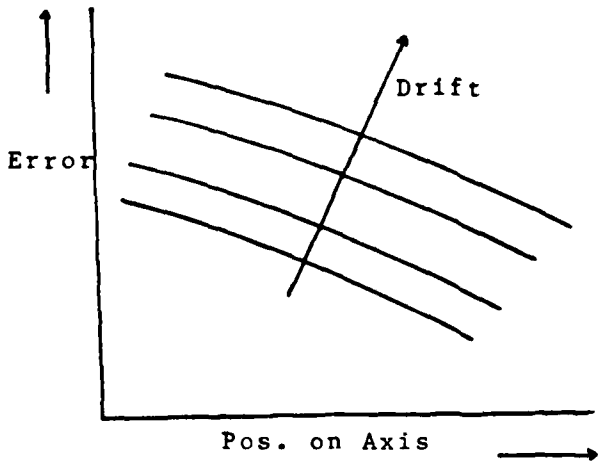

Fig. 5.3 Problem of Drift

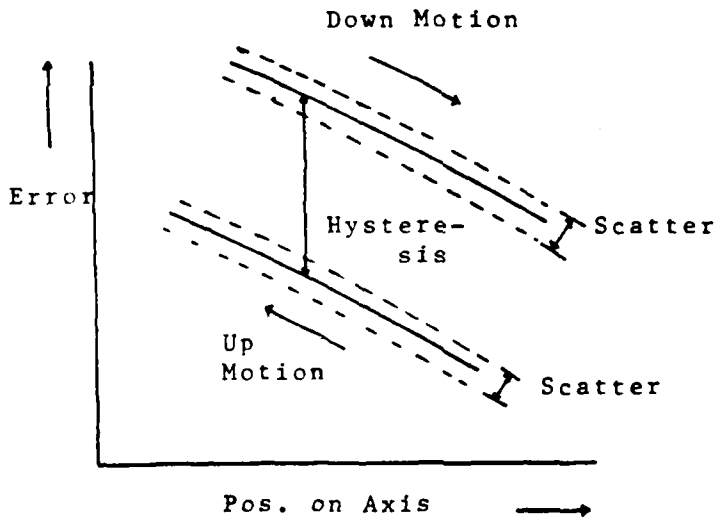

Fig. 5.4 Hysteresis in Machine Tool Errors

although it has on occasions been traceable to lack of balance in the null-circuit of the machine system. Whatever the cause, the main effect has been to increase the observed dispersion [12]. Hysteresis (lost motion, dead zone) is defined in terms of the difference between the right and left approach means at any given point [12]. Hysteresis is shown in Figure 5.4. Pitch errors of the lead screw are directly related to the pitch of the lead screw and these are prominent for short ranges. Lead screw pitch error components are present only in the case of positioning accuracy.

All experimental results are presented in Appendix 3. For the purpose of discussion, errors are classified into two groups:

1. Positioning errors

2. All other errors

The reason for the above classification is apparent on referring to Figures 5.5 and (5.6). Figure 5.5 shows the standard deviation over time of a positioning error and Figure 5.6 shows the same for one of the other errors. It is apparent from Figures 5.5,5.6 that the standard deviations of the positioning errors vary dramatically. All errors, other than the positioning error exhibit small variation of standard deviations. Standard deviations of all errors are presented in Appendix 3.

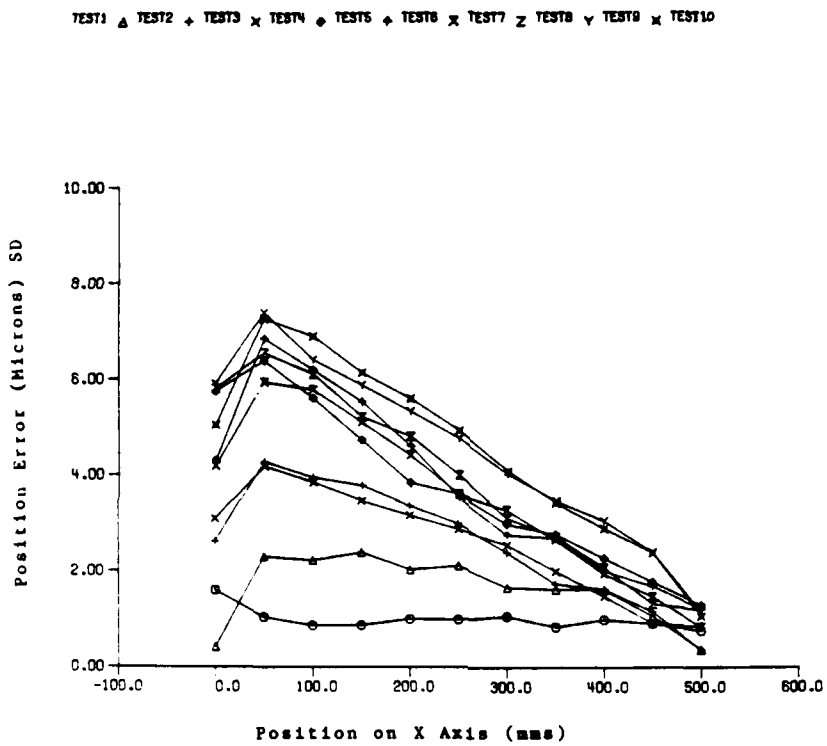

Fig. 5.5 Standard Deviation of Position Error, x axis

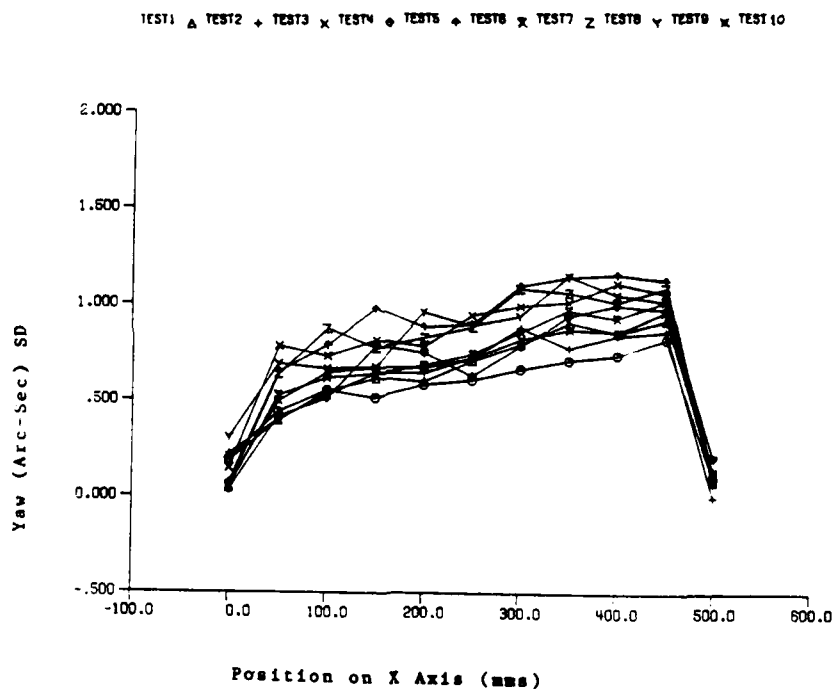

Fig. 5.6 Standard Deviation of Yaw Error, x axis

5.4.1 Discussion on Positioning Errors

Positioning errors are a result of motion of the slide on a lead screw. The positioning error is caused by a misused concept of metrology. The idea of using a screw to measure as well as to clamp is against all principles of metrology. However it is an accepted practice among machine tool manufacturers to use a single lead screw for multi purpose activities. This situation does not exist in lathes where a separate screw is used for thread cutting.

From experimental data, it is seen that positioning errors are very prominent errors in terms of magnitudes and the effect of temperature on these errors is very high. Positioning errors of all three axis x, y and z show identical characteristics, namely large standard deviations. This characteristic makes it impossible to predict this error by the use of statistical techniques of chapters 3 and 4. The reason for this characteristic is due to an extremely active heat source associated with the nut on the lead screw. The problem is all the more complicated because the heat source moves. Some work has been done on the prediction of positioning errors [44]. The approach taken in [44], is to model the system using moving heat source principles. Operating characteristics are also a part of the prediction process. Bearing preloads are also considered in the

analysis of the lead screw of the machine.

It is felt that there are quite a few alternatives to solving the problem of positioning errors. One solution is to develop theoretical models as discussed in [44]. Although this approach is feasible, boundary conditions are a problem and accurate determination of heat transfer coefficients will be difficult.

A different idea is to use an external measure for the evaluation of this error. This technique has been proposed in [46]. The idea is to mount accurate scales on the machines and use these for measurement of the positioning error. Other techniques are to use lasers as at Lawrence Livermore Laboratory [41]. Reports are available [43], where mention is made of an attempt to correct for thermally induced errors at Kerney and Trecker machine Tool Company.

An attempt has been made to predict thermally induced errors in the lead screw. The results are based on measured values of error. It is known that positioning errors have several components. These components are listed as

1. Periodic Error of the lead screw

2. Hysteresis Error of the lead screw

3. Thermal Error of the lead screw

4. Scatter

It is known that for the machine under consideration, the resolution is 0.0001 inches (2.5 microns). Due to this limitation it is not possible to position better than the above said number. In the method proposed, the cumulative average error is predicted based on a single temperature value. The average error is the mean of the bidirectional errors at a point on the axis. The cumulative error is the sum of all the error components listed above. The method is the simplest form of prediction and makes use of the following equation.

$$\text{Error} = {}_{e} * L * (T - 20) \qquad (5.1)$$

In Equation (5.1), $_{e}$, is the coefficient of thermal expansion, L is the location of the point at which the error is measured, and T is the temperature of the nut. (T-20) is used in Equation (5.1) due to the reference temperature principle explained earlier. The prediction capabilities of the Equation (5.1) is shown in Figures 5.7,5.8,5.9. In all the following figures, test refers to the test numbers of Appendix 3. In all the Figures 5.7,5.8,5.9, thermal drift has been corrected. Correction of thermal drift is performed by setting the value of the error at the zero scale position to zero and making corresponding changes at all other points. It is seen that the prediction is quite good. It should be

noted that the data in Figures 5.7,5.8,5.9, show the prediction capabilities for later time periods. In the initial time periods (near start up), the predictions do not seem to be good.

Certain features need to be discussed here about this method of prediction. The method is not capable of predicting thermal drift. To predict drift, some other external reference will be needed. Use of a tool setting station is recommended for this purpose. An alternative to a tool setting station will be a metrology pallet as described in [53]. A feature necessary for prediction of this error is the building of a duty cycle based model. The need for building a duty cycle model is because of the large standard deviations associated with this error. It is seen that in spite of the good prediction offered by Equation (5.1) (on the mean), experimental results indicate that the lead screw expands by as much as 2 microns on each traverse. Experimental results to support this point are shown in Table 5.1. Results in Table 5.1, are for the y axis of the machine. The measurements are taken only at the end points of the said axis and time between readings is almost negligible. The speed used in this experiment is 3000 mm/min. It is seen that the error increases by as much as 2 microns for each pass. The error reduces by as much as 10 to 15 microns, 10 minutes

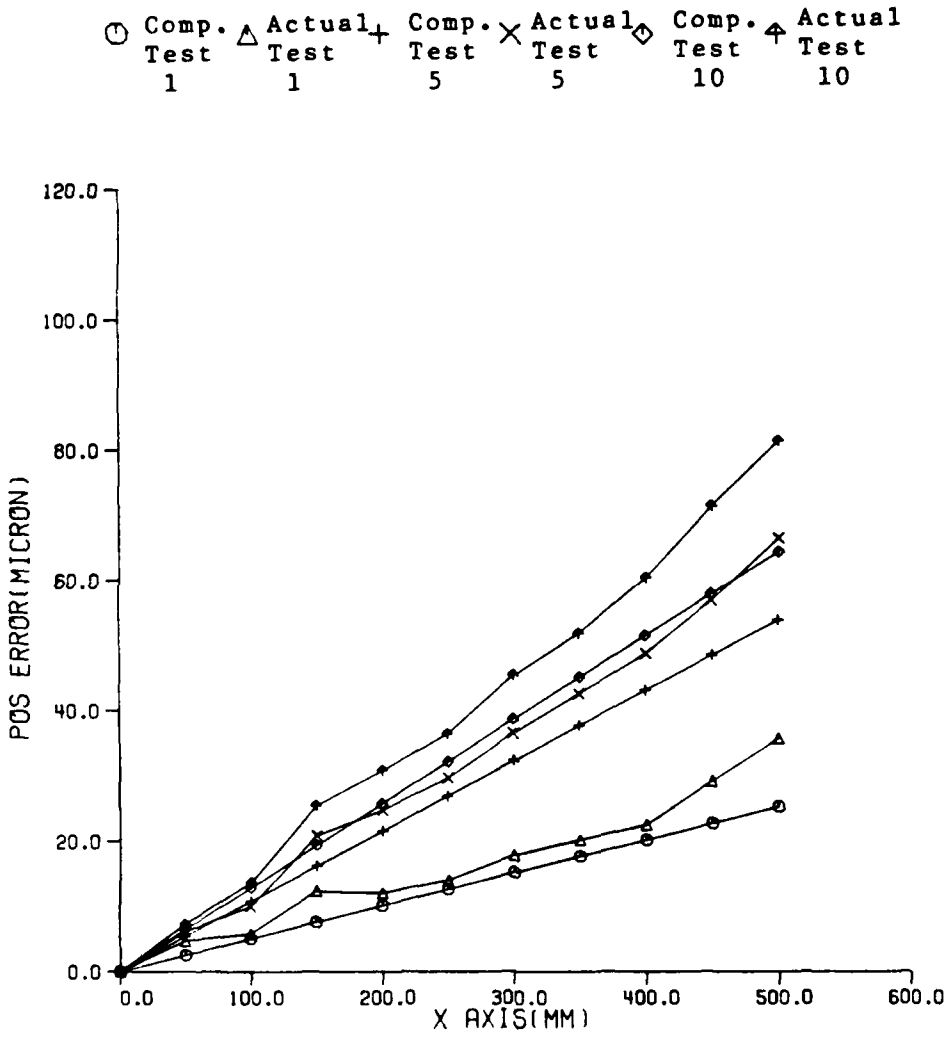

Fig. 5.7 Prediction of Position Error, x axis

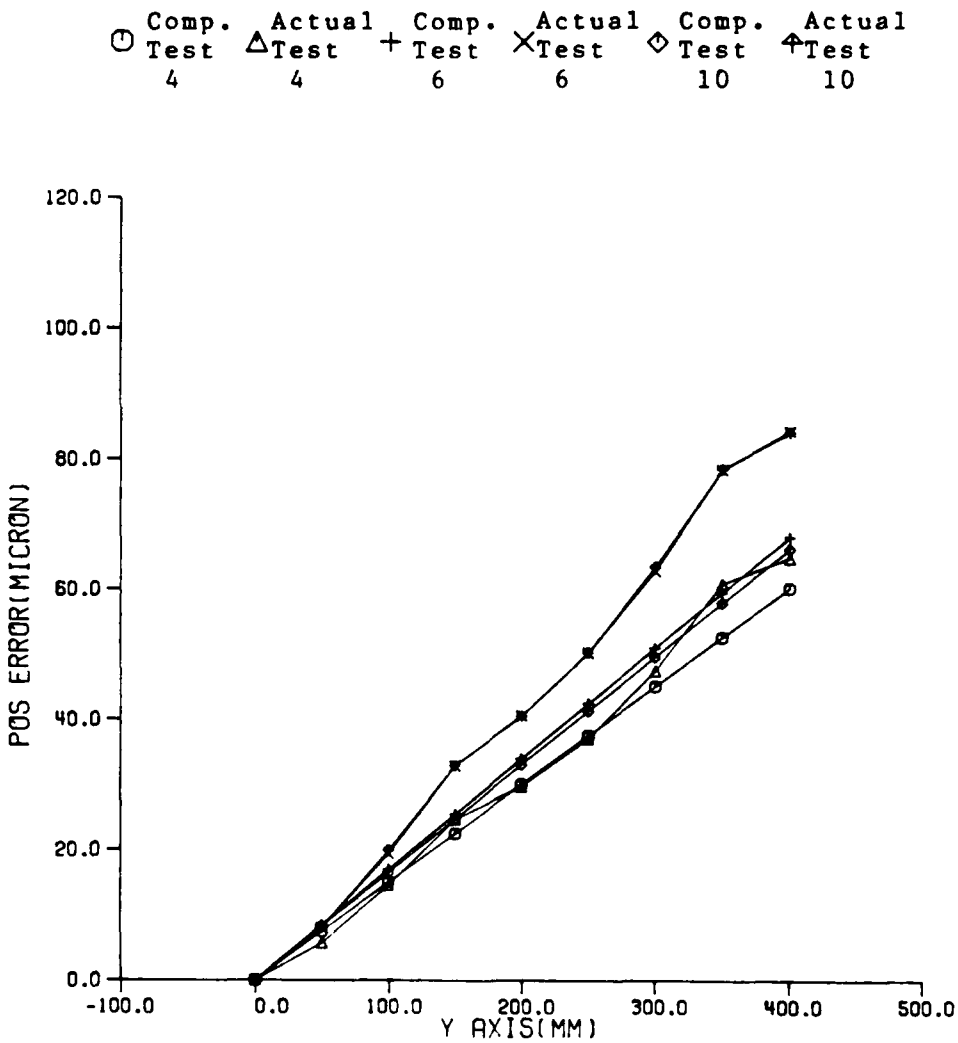

Fig. 5.8 Prediction of Position Error, y axis

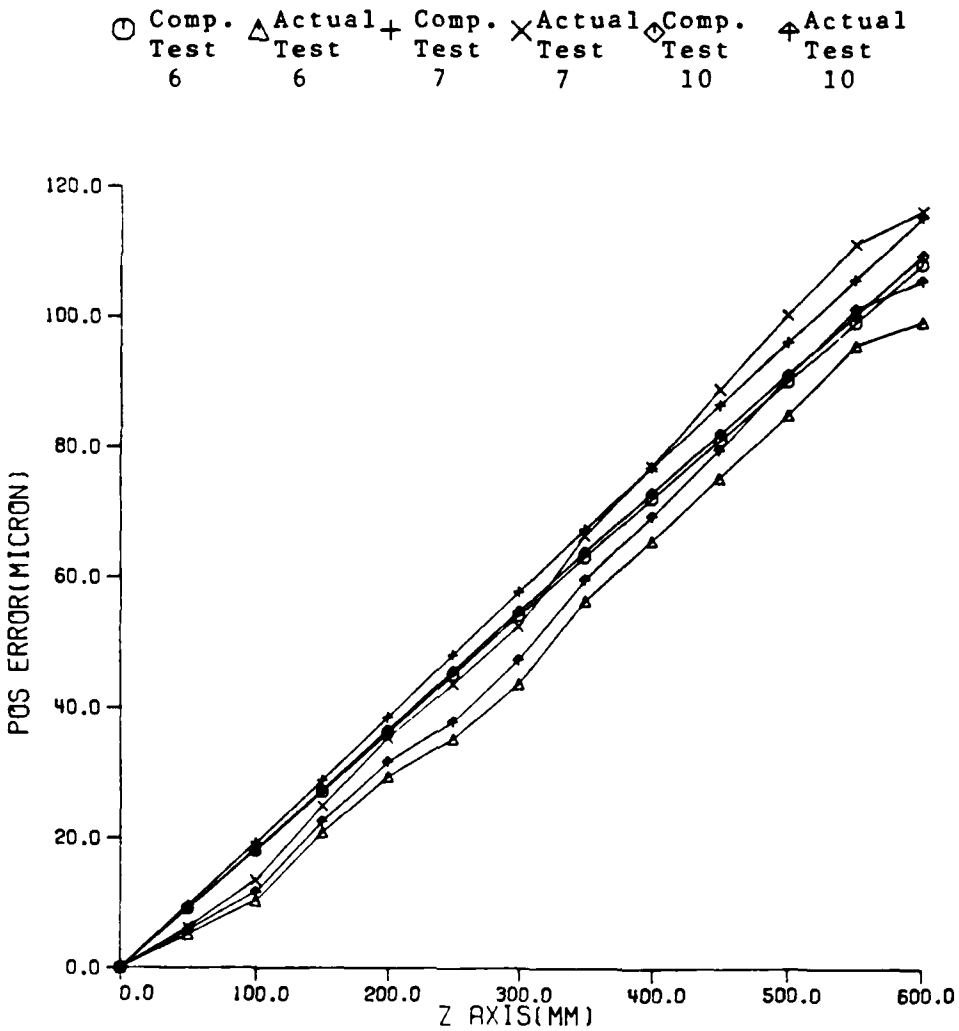

Fig. 5.9 Prediction of Position Error, z axis

Table 5.1 Expansion of Lead Screw (microns)

pass	pos. at 0 mm	pos at 484 mm
1	21.36	88.30
2	20.75	89.42
3	20.51	90.28
4	19.83	91.80
5	20.3	92.04
6	20.72	93.22
7	21.30	93.60
8	21.1	94.35
9	22.0	95.15
10	21.75	95.80
20	24.26	100.30

after the motion is stopped. This characteristic is very disturbing and so there is a need to develop duty cycle based models in addition to the prediction offered by Equation (5.1).

5.4.2 Other Errors

The other errors are those associated with slide ways. These errors are straightness errors and angular errors. The method used for prediction of these errors is a statistical one, similar to the one used in Chapter 3. Results of the statistical prediction capabilities are shown in Figures 5.10,5.11,5.12. Figures 5.10,5.11,5.12 show that the errors are predictable. All the Figures 5.10,5.11,5.12 are predicted against measured values. All comparisons are for test set 5 of each error except y axis vertical straightness. For y axis vertical straightness, the comparison is done for test set 6. Please refer to Appendix 3 for experimental data. Also it should be noted that the data used to compare regression results with actual results has not been used in the determination of the regression equation. The predictions are on the mean and to get the actual values, constant offsets are to be used based on hysteresis. Exerimental results show that the hysteresis

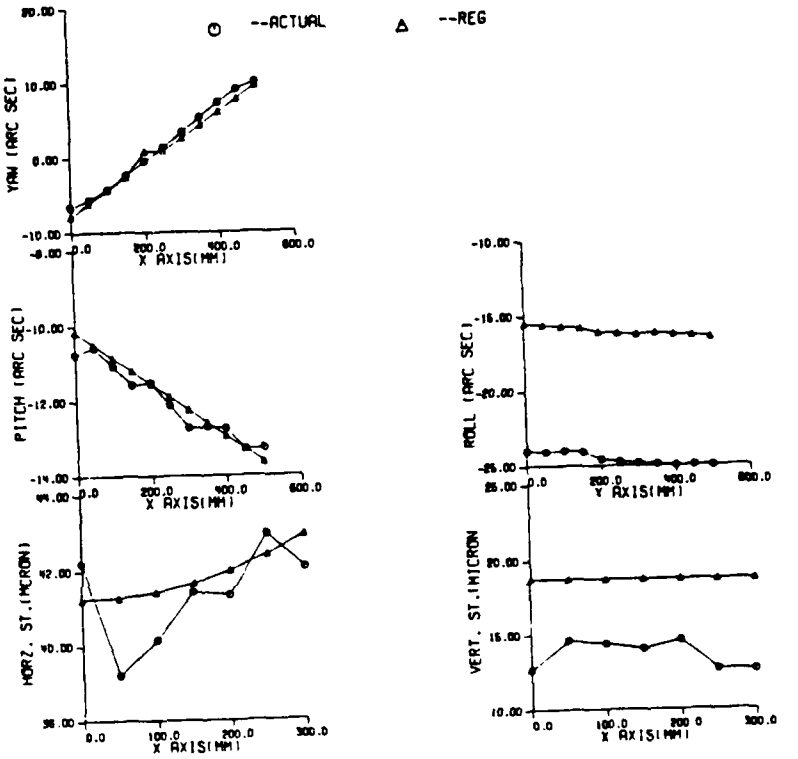

Fig. 5.10 Prediction of Other Errors, x axis

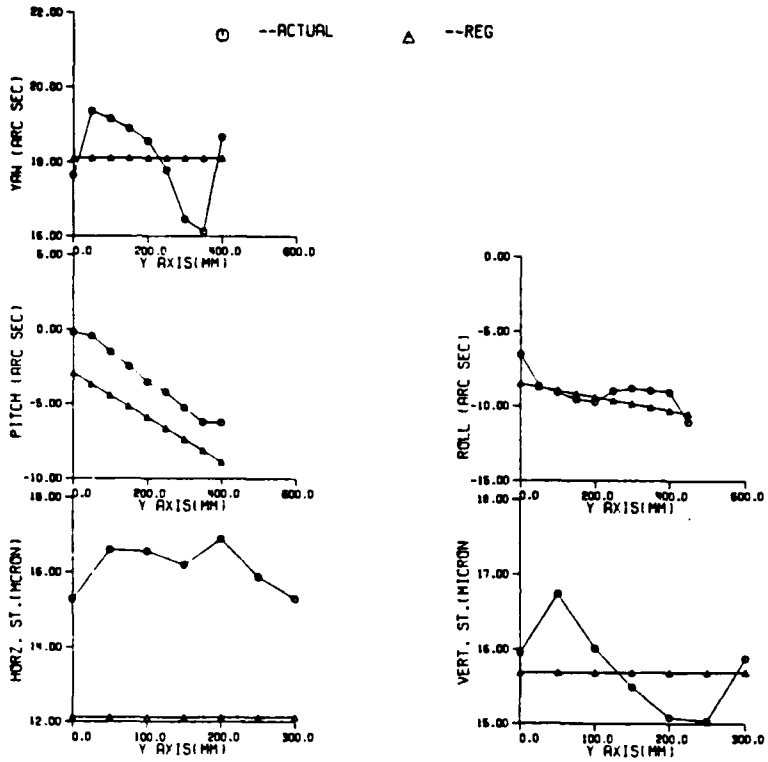

Fig. 5.11 Prediction of Other Errors, y axis

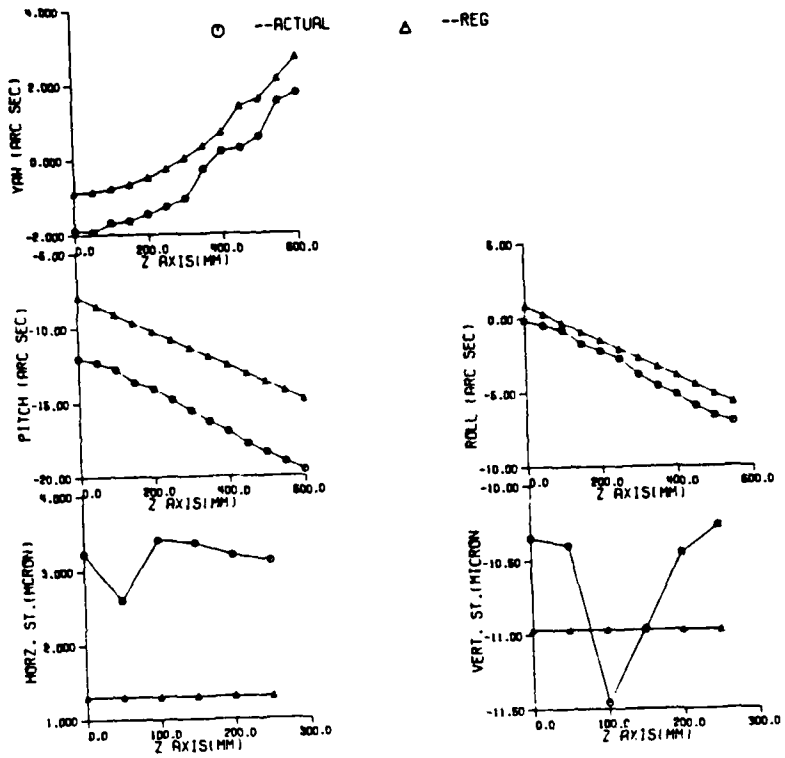

Fig. 5.12 Prediction of Other Errors, z axis

is relatively constant over time. It should also be noticed that some of the errors are relatively constant. The effect of temperature on these few errors is small. This feature is typical of errors in the z axis. Thermal effects are lower because there is only one heat source on the z axis. Hence some of the errors are less affected.

Of interest is to determine how errors in the workspace of the machine reduce due to prediction by regression equations. To determine this, the techniques developed in Chapter 3 are used again. Measured values of errors are combined in the workspace of the machine and these are compared with values as obtained from the regression equations. The difference between the two is an indication of the error. In case 1, the position errors are not included. In case 2, the position errors are included, with prediction of position error by Equation (5.1). In case 2, thermal drift in not considered for position error. The results of case 1 is presented in Table (5.2). Table (5.3), shows the error as predicted by using regression functions. Table (5.4), shows the volumetric error with position error considered. Table (5.5) shows the same error as Table (5.3), but the position error is predicted by using Equation (5.1). It should also be mentioned that values computed for the (0,0,0) point do not have any error

components. This is because it is not possible to measure any error at this point. Figure 5.13, shows the results. Table 5.6 shows the tests (refer Appendix 3) of individual error components used to determine the workspace error.

The experiments conducted prove without a doubt that thermal effects on eighteen errors of a particular machine tools can be predicted by using simple regression equations. This conclusion should hold for all machine tools of the same class (at least). This does not conclude the work needed in the area of thermal effects on machine tools. Much more work has to be done especially on squareness errors between the three axis. Squareness errors and errors of parallelism were not measured. It is suspected that simple regression equations can be obtained for prediction of squareness errors and errors of parallelism.

5.5 Prediction by Numerical Methods

A statistical method for the prediction of errors has been presented in the last section. The problem associated with statistical methods is that the prediction is valid only within the observed ranges of the independent variables (in this case temperature). In order to obtain reliable results one would have to perform experiments over a very wide range of

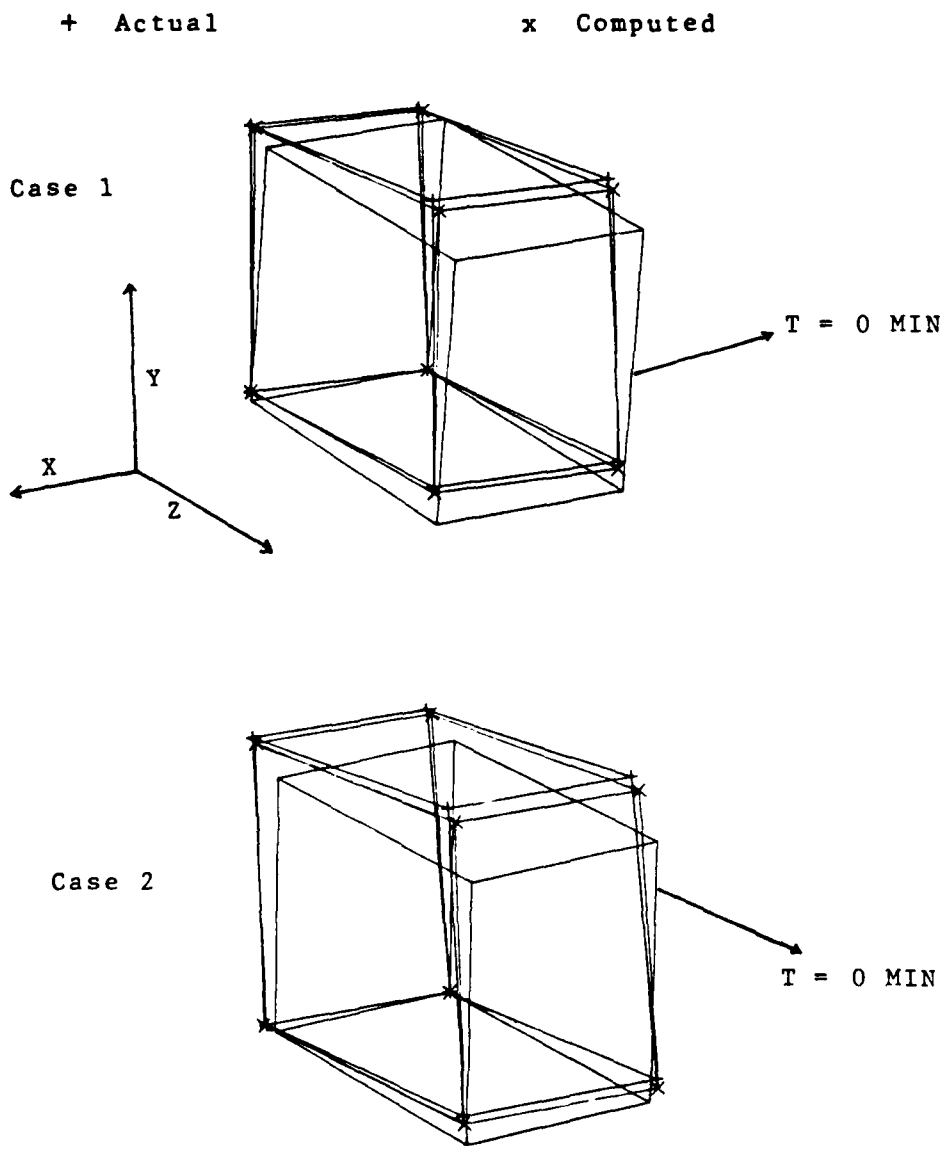

Fig. 5.13 Volumetric Error,
Actual vs Computed

Table 5.2 Error of Work Space, Experimental Work, No Lead Screw Errors

x pos	y pos	z pos	err x	err y	err z
0.	0.	0.	0.	0.	0.
0.	0.	66.00	41.34	-154.74	0.
0.	66.00	0.	40.88	0.	155.43
0.	66.00	66.00	74.60	-174.78	180.38
66.00	0.	0.	0.	-1.23	47.28
66.00	0.	66.00	-13.37	-136.74	58.57
66.00	66.00	0.	32.56	-4.63	191.10
66.00	66.00	66.00	11.57	-160.16	227.33

Table 5.3 Error of Work Space, Computed, by Regression Equations No Lead Screw Errors

x pos	y pos	z pos	err x	err y	err z
0.	0.	0.	0.	0.	0.
0.	0.	66.00	46.15	-120.63	0.
0.	66.00	0.	45.02	0.	118.40
0.	66.00	66.00	76.18	-140.10	141.24
66.00	0.	0.	0.	0.95	49.20
66.00	0.	66.00	-11.01	-101.06	55.24
66.00	66.00	0.	33.47	0.95	163.97
66.00	66.00	66.00	7.48	-120.53	192.85

Table 5.4 Error of Work Space, Experimental Work, Lead Screw Error is Considered

x pos	y pos	z pos	err x	err y	err z
0.	0.	0.	0.	0.	0.
0.	0.	66.00	41.34	-154.74	108.29
0.	66.00	0.	40.88	68.11	155.43
0.66	0.	66.00	74.60	-106.67	288.67
66.00	0.	0.	64.49	-1.23	47.28
66.00	0.	66.00	51.12	-136.74	166.86
66.00	66.00	0.	97.05	63.48	191.10
66.00	66.00	66.00	76.06	-92.05	335.62

Table 5.5 Error of Work Space, Computed, by Regression Equations, Lead Screw Error is Considered

x pos	y pos	z pos	err x	err y	err z
0.	0.	0.	0.	0.	0.
0.	0.	66.00	46.15	-120.63	99.39
0.	66.00	0.	45.02	84.41	118.40
0.	66.00	66.00	76.18	-55.69	240.63
66.00	0.	0.	81.56	0.95	49.20
66.00	0.	66.00	70.55	-101.06	154.63
66.00	66.00	0.	115.03	85.36	163.97
66.00	66.00	66.00	89.04	-36.12	292.24

Table 5.6 Error Components used to Determine Work Space Errors

Error	x axis test	y axis test	z axis test
Position.	10	6	6
Vert. St.	5	6	5
Horz. St.	5	5	5
Pitch.	5	5	5
Roll.	5	5	5
Yaw.	5	5	5

conditions. To overcome this problem, a numerical solution is proposed. The approach has been tested only for the x and z axis.

The general approach for the numerical solution is presented in Figure 5.14. The technique uses finite elements to determine the temperature field of the machine based on the temperatures of a few measured points. The inputs to the finite element program are the structure and the temperatures of the measured points. The finite element program calculates the temperature of the remaining nodal points. The structure is the same as in Appendix 1, Figures A1.1 and A1.2. The only difference is the thickness of the structure. The present structure has a wall thickness of 1.9 Centimeters (0.75 in). Internal plates are the same as before. For the elasticity problem, SAP 5 is used again. Instead of solid elements, all elements in the present formulation are plate elements.

Error calculations from the distorted structure is the same as was used before, in Chapter 3. Straightness errors are corrected for slope, in a manner similar to that done in the experimental work. As mentioned before in Chapter 3, there are fundamental differences between measured errors and calculated errors. The basic difference is that in the calculation sequence, all errors are calculated with respect to a nice undistorted

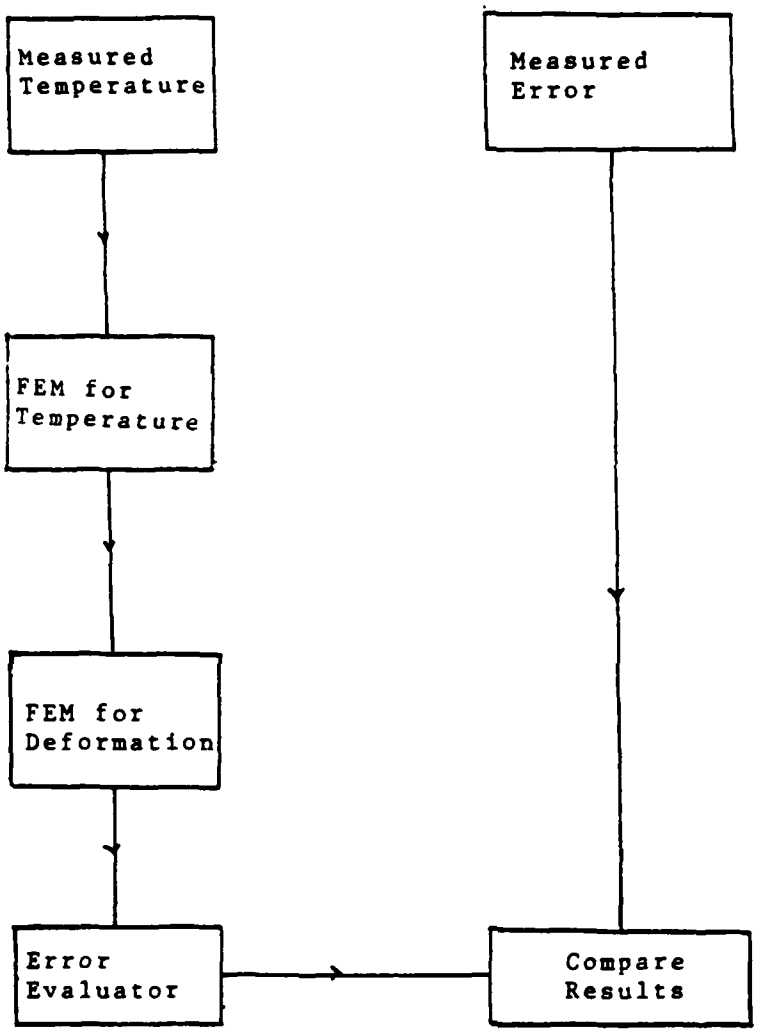

Fig. 5.14 Prediction by Numerical Methods

structure. The calculated errors are in a sense absolute. The errors as measured are relative to some specific point. This immediately creates problems because the relative displacement or rotation between two points is measured as error. There are also problems regarding built in errors of the machine. Without experimental work, built in errors can never be determined. Built in errors are typically related to the process used in the manufacture of the said machine. They are also caused by improper assembly procedures.

In spite of the above problems, a model has been developed and it will be presented. As explained before the model is based on a finite element approach. Machine tool inaccuracy is written out in a linear form as follows:

$$[\text{Total Error}(i)] = [\text{Built in Error}] + [\text{Thermal Error}(i)] \tag{5.2}$$

The thermal error component of Equation (5.2) is given by

$$[\text{Thermal Error}(i)] = [\text{Thermal Error}(i-1)] + \text{Drift} + [\text{Some Component}] \tag{5.3}$$

In Equations (5.2,5.3), error is referred to as a vector. Vectors are distinguished by box brackets and [Error], is used in a generic sense to represent all errors other than the position error. Vector in this

context means that associated with each point on the axis of the machine tool, is a particular error value. The set of error values corresponding to the whole axis of the machine is [Error]. In the above equations, i, refers to time. Essentially Equation (5.3) says that at all points in time, error vectors are identical to one an other but, they differ by drift, which is a scalar and some other component. This additional component is also a vector. [Built in Error], of Equation (5.2), is also a vector.

The finite element approach is used to explain the errors induced in machine tools. Estimation of angular errors and straightness errors have been attempted by the finite element approach. Let [E(i)], be the error at time (i). [E(i)], is a vector in the sense explained before. [E(i)] has a set of values which corresponds to errors at specific points on the axis of the machine tool. [E(i)] has been evaluated at some state T(i). T(i) is the temperatures measured by the thermocouples on the axis of the machine. Let [M(i)], be the measured value of error also at temperature T(i). Now built in error of Equation (5.2) is obtainable as

$$[\text{Built in Error}] = [E(i)] - [M(i)] \qquad (5.4)$$

Drift as explained, is scalar and it can be removed easily. This is done by setting the error associated with the zero scale position to zero and by making

corresponding adjustments to all the other readings.

Errors as obtained from finite element methods are compared to measured errors for the x and z axis. The y axis is not studied because of the complex structure and also because of the moving heat source (the spindle) associated with this axis. On the z axis only two of the errors show significant changes with temperature. These are pitch and vertical straightness. So comparisons have been made for only these two errors. On the x axis, only three of the errors have been compared. The three errors that have been compared show appreciable change with position on the axis. On the x axis, roll and horizontal straightness errors have not been compared as they are relatively constant for variation in position. The reason for this will be explained in the next few paragraphs.

Comparison of numerical and experimental results is done on a error by error basis. This is because thermal fields are not exactly the same for any two different errors. The first step is to determine the built in error vector based on a specific temperature using Equation (5.4). Having evaluated the built in error, the errors are recomputed for a different thermal state. To this new error vector, the built in errors are added. The so computed error is corrected for drift and compared with corresponding experimental results. The

experimental results are also corrected for drift. Drift correction is done as it appears that the finite element models used here are not capable of calculating these values.

It has already been mentioned that the measured errors are relative. With this in mind an attempt has been made to compare numerical results with experimental results. The error in question is the vertical straightness of the z axis. Figure 5.15 provides an indication of the process. Measured values of vertical straightness errors are as plotted in Figure 5.16. Figure 5.17 shows values as computed at the guideways, no offsets have been included and the values are for the same range of motion as the experimental values. It appears that there is no correlation between the two. The missing component is drift. Keeping in mind that the laser is measuring the relative displacement between two points, a measured point and a fixed point, correction is necessary for numerically computed values. The correction required is the displacement of the fixed point. Displacement of the fixed point is obtained by

$$\text{Displacement} = L * e * (\text{room temp} - 20) \qquad (5.5)$$

L in Equation (5.5) is length shown in Figure 5.15. When corrections for displacement of the fixed point are made it is seen that numerical and experimental errors

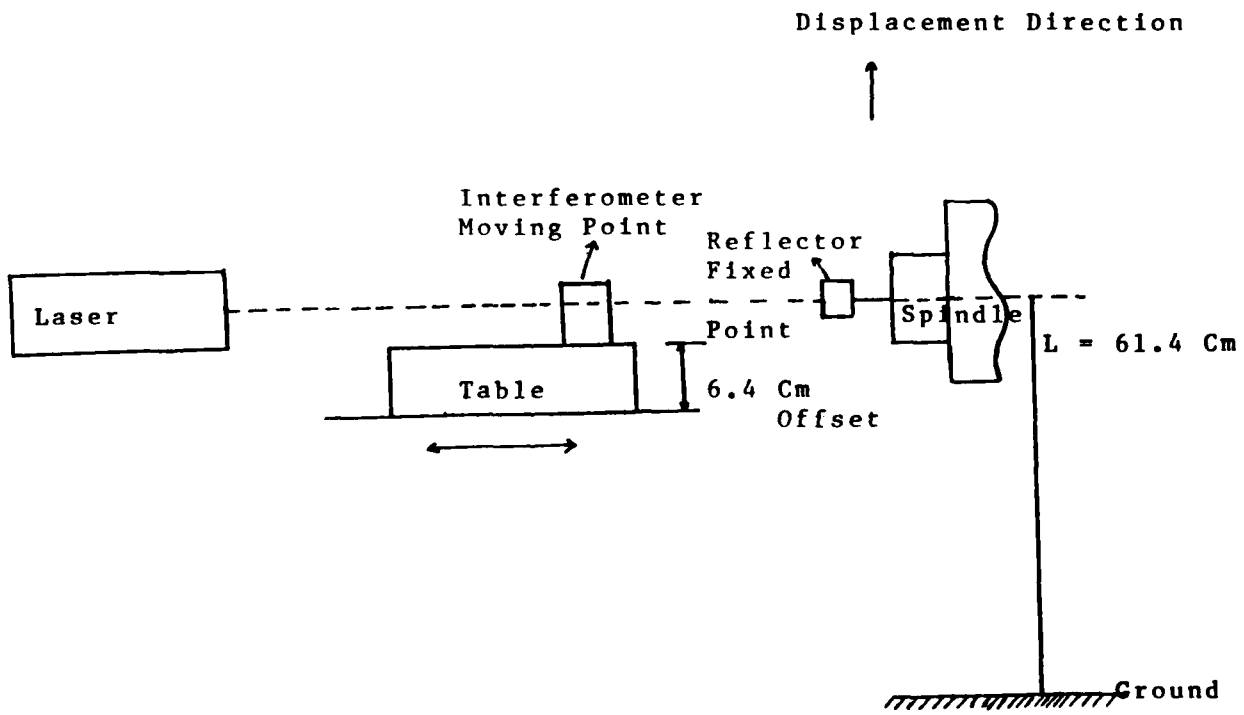

Fig. 5.15 Measurement of Vertical Straightness, z axis

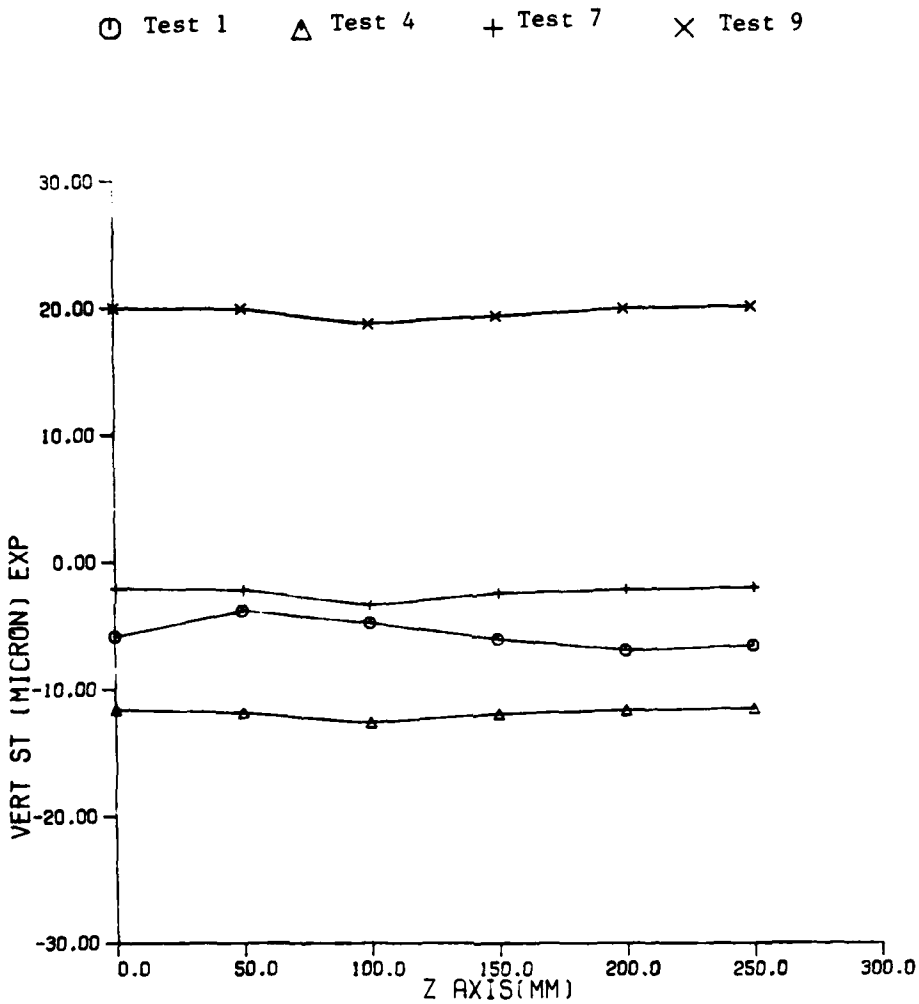

Fig. 5.16 Vertical Straightness from Experiment, z axis

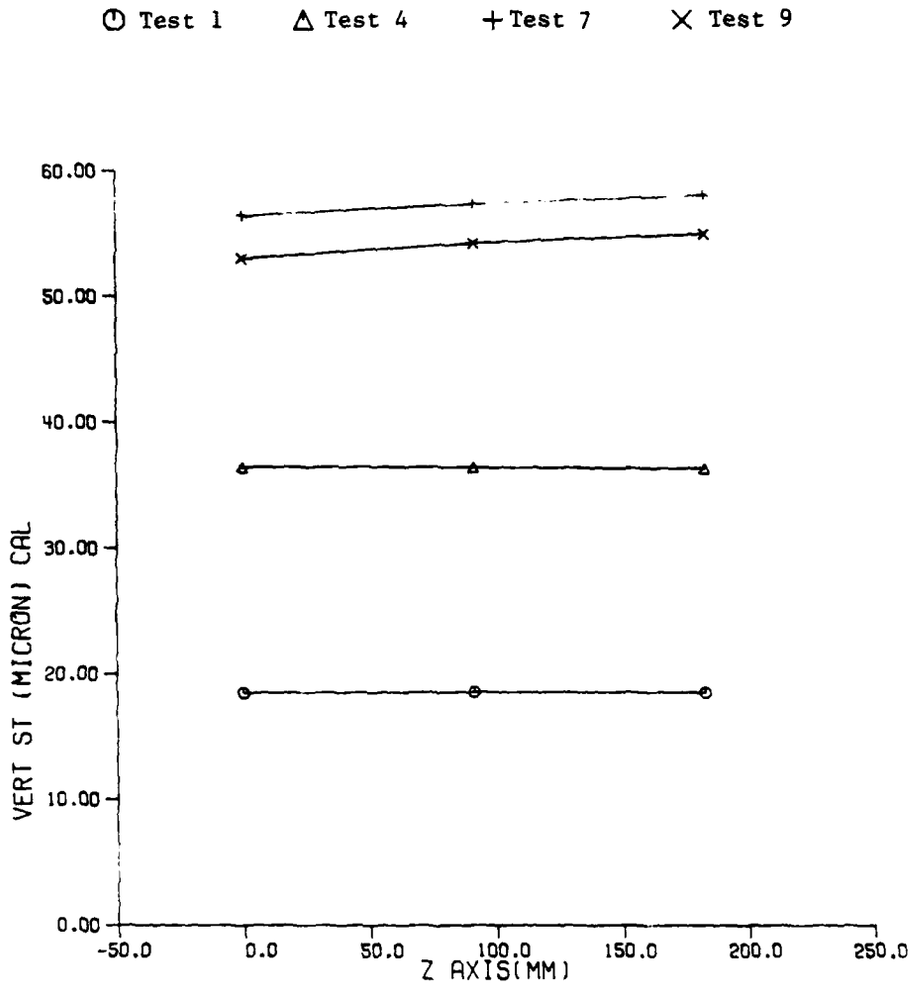

Fig. 5.17 Vertical Straightness from Calculations, z axis

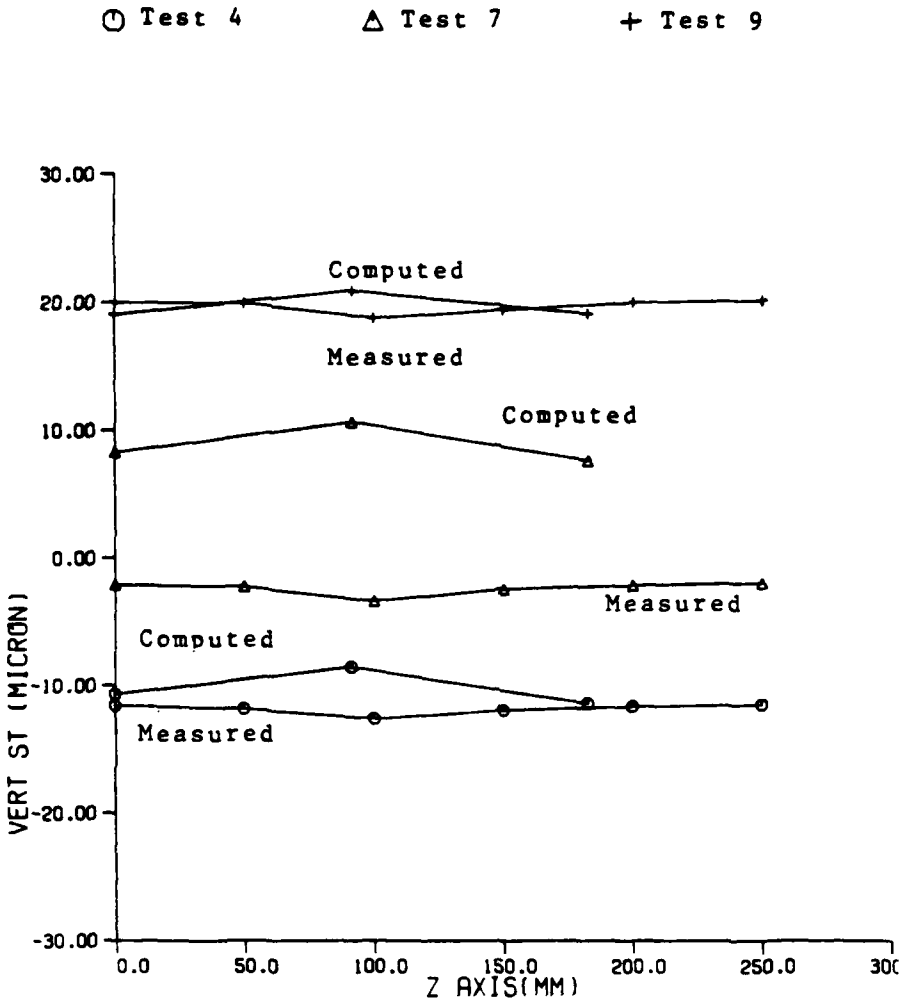

Fig. 5.18 Calculation vs Experiment for Vertical Straightness, z axis, test 1 used to get built in error

are reasonably accurate for the computed cases, Figure 5.18. In Figure 5.18, the computed errors have also been corrected for angular errors on the z axis, using methods of Chapter 3. The offset calculation is given in Equation (5.6),

$$\text{Vert.St.} = \text{Computed Vert. St. at guideway} + \text{pitch} * \text{offset in z} + \text{Roll} * \text{offset in x} \quad (5.6)$$

As roll is relatively constant in z, the roll component is not included. Also it should be remembered that the x offset in Equation (5.6), is constant, it does not change in the experiment.

The above method is relatively easy for *straightness* errors, but evaluation of rotations for the fixed point is not easy. For example, in the case of z axis pitch error, the fixed point is on the spindle. Rotations will occur only if there are thermal gradients between the sides of the spindle and evaluation of fixed point rotations will be very difficult. It is due to such complications, that the finite element procedure for evaluation of errors has not been extended. However the comparison for numerically computed errors and experimentally measured errors are presented in Figures 5.19,5.20,5.21,5.22. All errors are corrected for drift and are shown for the same range as measurement. For the x axis, it is seen that roll and horizontal straightness do not change with scale readings. Due to

this reason, computations have not been performed for these errors.

Much more work has to done to estimate the exact relationships between numerical and experimental work. It is felt that the relationships may work out to be relatively simple as in the case of the vertical straightness of the z axis.

This concludes the work done. The next sections are conclusions and ideas for future research.

5.6 Conclusions

Broadly speaking, thermal influences on machine tool structures should be approached from two view points. One deals with the design phase of the machine and the other is concerned with the software compensation process. The design phase deals with the analysis of a new machine and techniques discussed in Chapters 2 and 3 would form the basis of such an analysis. Software compensation aspects are discussed in Chapter 5. The two problems of design and software compensation are interdependent. It is obvious that good design will reduce the need for software compensation. Software compensation should be viewed as a means of reducing thermal effects that cannot be eliminated at the design phase and not as a remedy for bad design.

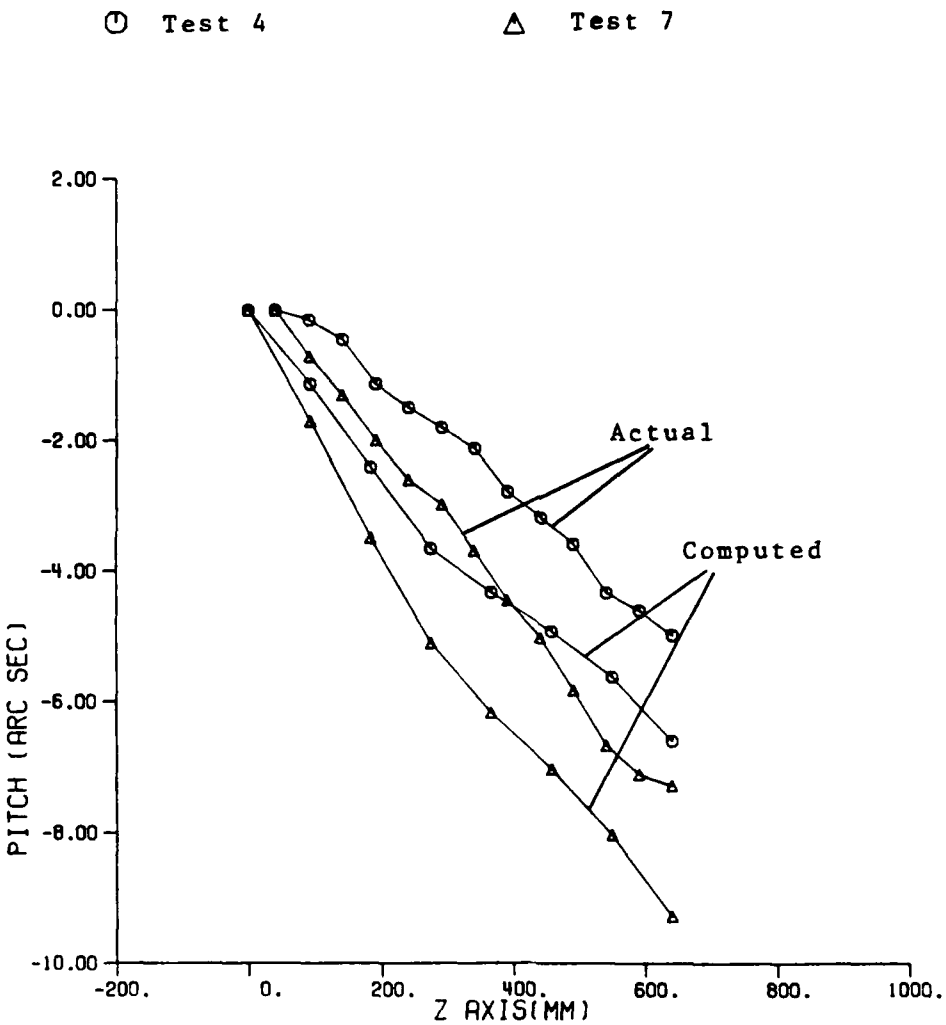

Fig. 5.19 Calculation vs Experiment for Pitch, z axis (drift correction)

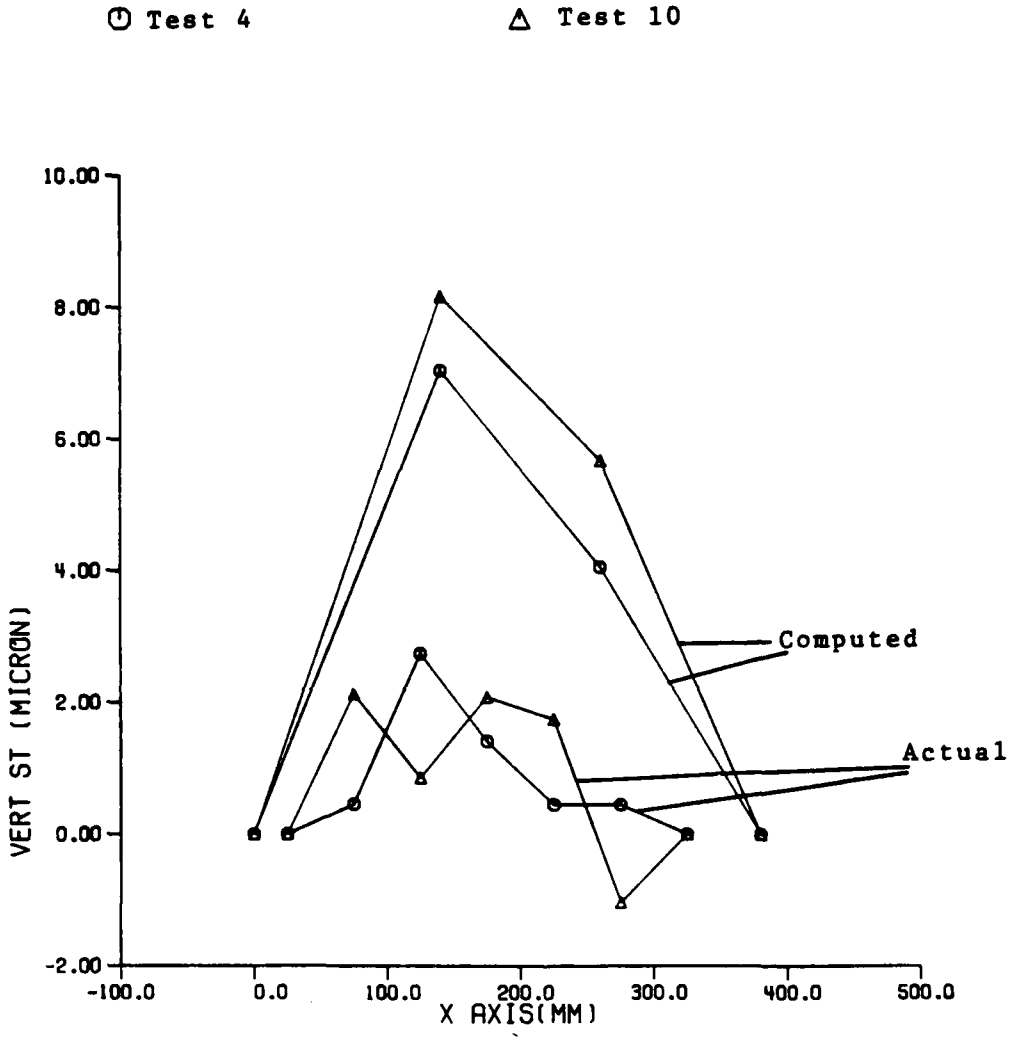

Fig. 5.20 Calculation vs Experiment for Vertical Straightness, x axis (drift corrected)

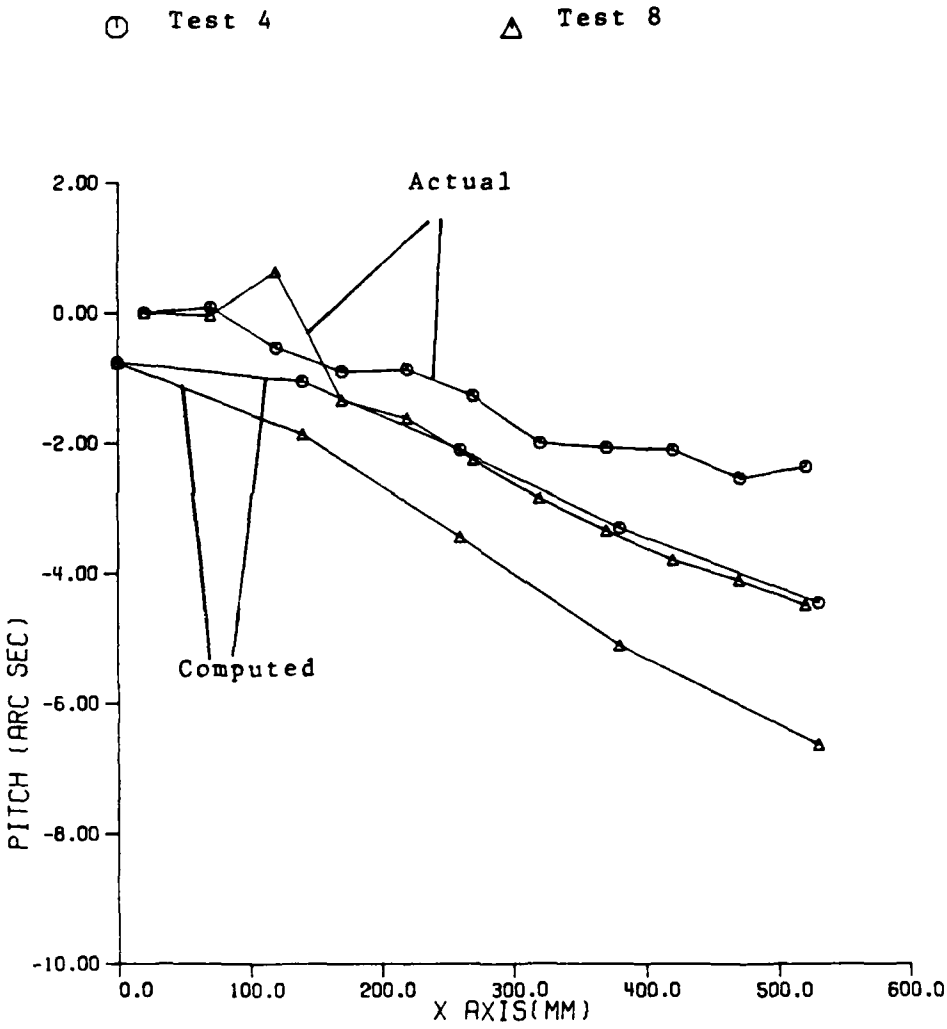

Fig. 5.21 Calculation vs Experiment for Pitch, x axis, (drift corrected)

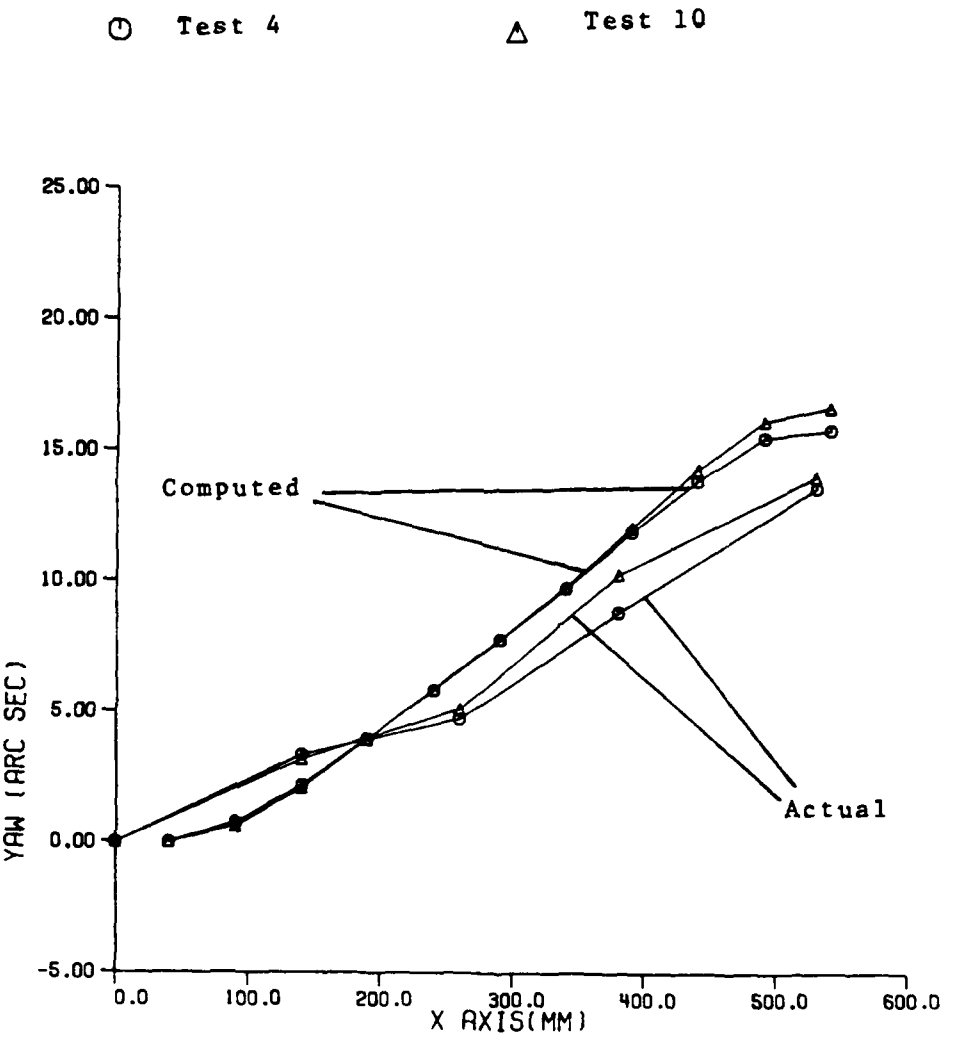

Fig. 5.22 Calculation vs Experiment for Yaw, x axis (drift corrected)

At the design phase, it is known that good design will reduce the effect of thermal influences. An example of good design is shown in Figure 5.23. In Figure 5.23, the effect of nonsymmetric heat sources is shown. The structure under consideration is the z axis of the machine, shown in Figure A1.3. The heat source is as shown in Figure A1.4. Figure 5.23 shows the effect 30 minutes after the heating process begins. It is now obvious that the location of the heat source is extremely important and symmetry would be the deciding factor. The ideal condition would be to take the heat sources out of the machine. This would reduce the heat input to the structure. Reduction of heat input obviously will reduce the deformations. In this context, cooling the lubricating oil is also important.

In terms of boundary conditions, based on numerical computations, it was observed that fixing the base of the machine rigidly would reduce the vertical straightness error by as much as 10 to 15 microns. Undoubtly fixing the base of the machine rigidly would be impossible. However, it would be worthwhile to study the effect of different types of foundations on the accuracy of machine tools.

Regarding software compensation of machine tools, it has conclusively been shown that thermal effects are predictable. Chapter 4 provides the theoretical basis

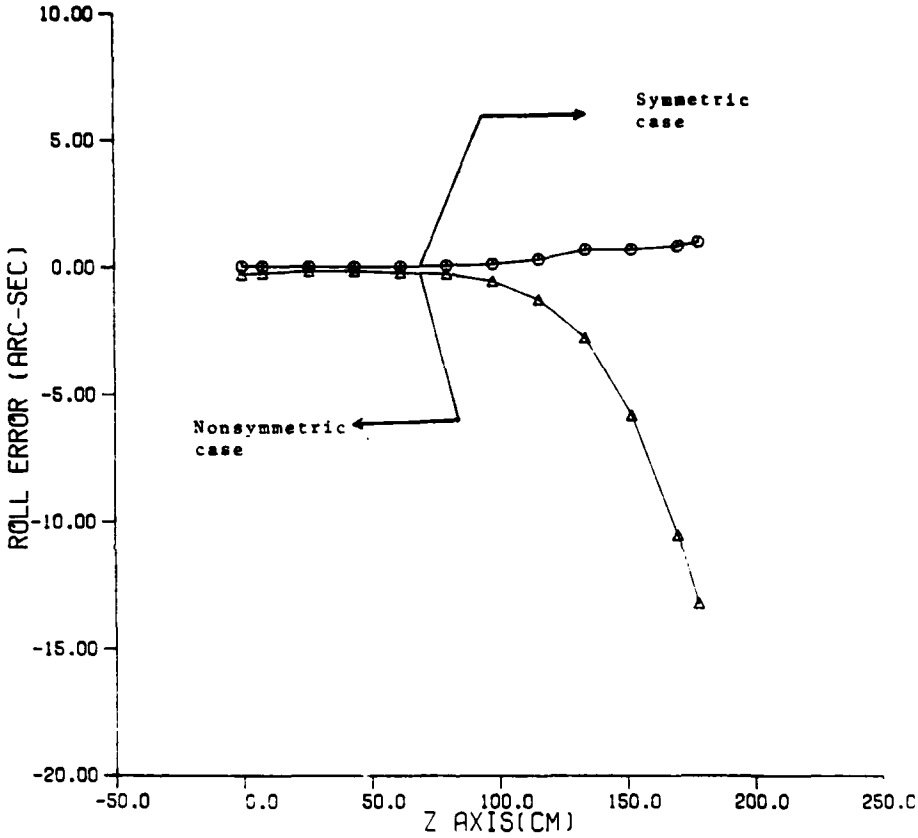

Fig. 5.23 Effect of Nonsymmetric Heat Sources

of software compensation. In Chapter 5, it is shown conclusively that thermal effects on accuracy of machine tools can be predicted. Based on experimental evidence, it should be mentioned that the number of thermocouples required for software compensation will be less than 55, the number used in experimental work. It is seen from the regression equations presented in Appendix 3, that for the x axis, ten thermocouples are required. For the y axis only six thermocouples are required and for the z axis, only seven.

Numerical prediction of thermal effects on machine tools is a definite possibility. Based on the work done, sufficient evidence exists to show that numerical methods are capable of predicting thermal effects on errors. In fact it is apparent that numerical methods will be the suitable alternative to months of calibration. Speed is a cause for concern while using numerical methods for on line prediction of errors. Computation time can be dramatically reduced if it is recognized that the structure does not change. Under such conditions, it will be sufficient if the decomposed L-U matrices of Crout's algorithm be held in the memory of a computer. The problem now changes from one of speed to one of storage.

5.7 Recommendations for Further Research

This section outlines some of the areas that would require further research.

Numerical solution of the y axis of the machine is still a challenge. The problem is complex due to a moving heat source (spindle bearing) and additional heat sources on the column. It is possible that a superposition approach can be attempted. The idea is to model the carrier and the column independently. Once the displacement profiles are obtained, superposition of the two, with a numerical simulation of rigid body motion is feasible (similar to the method in Chapter 3).

As regards numerical methods, it is felt that a simpler technique may be possible. Based on measured temperature values, it may be possible to fit simple polynomials of x, y and z for evaluating thermal profiles based on the temperatures of a few points. The reason for using simple lower order polynomials is because it is known that almost 90 percent of the machine is at room temperature. Only 10 percent reaches temperature which are at most 20 to 30 degrees Centigrade above room temperature. It is possible that very simple polynomials will be sufficient. Using this simplified polynomial thermal field, analytic solutions can be attempted.

Analytic solutions of the form attempted in Chapter 4 are very challenging. Very few solutions are available for three dimensional problems. In the context of machine tools, the problem is essentially three dimensional. This is mainly due to non-symmetric location of heat sources. The motivation for developing analytic solutions is to see if it is possible to control thermal displacements by using additional heaters. The idea is very appealing and definitely deserves some thought.

On lead screw errors, correction techniques are available. Schemes based on scales or on lasers are known. Actual implementation of such schemes are worth while investigating.

Further experiments along the lines of Chapter 5 are required. Accuracy performance of the same machine with a variety of environmental conditions is necessary. Provision for room temperature control would be essential in this regard. Assuming that software correction techniques have been installed, the problem of determining the time between sampling temperatures has to be studied. Is the criterion to based on time or is it to be based on temperature ?

From an instrumentation point of view, development of new equipment is a necessity. It is obvious by now,

that the key aspect to accuracy is good instrumentation. Straightness errors can be measured, but the set up time is long and complicated. Due to such problems newer and simpler methods for measurement are necessary. In this context, the metrology pallet concept is an extremely interesting idea [53]. So is the possibility of using lasers as tools kept in the tool chain for calibration of the machine tool. It is felt at this point, besides concentrating on errors along three axis of the machine tool, measurement of the volumetric error would be a good idea. Volumetric error measurement schemes even if based on planar regions need further research. Thermal effects are appreciable in the working volume of the machine, so direct measurement methods would be very useful.

In conclusion, the most important problem is, having modeled the machine, how does one implement the process of correcting errors ?

LIST OF

REFERENCES

LIST OF REFERENCES

1. M.H. Attia and L. Kops, "On the Role of Fixed Joints in Thermal Deformation of Machine-Tool Structures", C.I.R.P., Vol. 27/1/1978, p 305.

2. M.H. Attia and L. Kops, "Computer Simulation of Nonlinear Thermoelastic Behavior of a Joint in Machine Tool Structure and its Effect on Thermal Deformation", A.S.M.E. Transactions, Journal of Engineering for Industry, Vol. 101, No. 3, 1979, p 355.

3. M.H. Attia and L. Kops, "Nonlinear Thermoelastic Behavior of Structural Joints - Solution to a Missing Link for Prediction of Thermal Deformation of Machine Tools", A.S.M.E. Transactions, Journal of Engineering for Industry, Vol. 101, No. 3, 1979, p 348.

4. M.H. Attia and L. Kops, "Calculation of Thermal Deformation of Machine Tools, in Transient State with the Effect of Structural Joints Taken into Account", C.I.R.P., Vol. 28/1/1979, p 247.

5. M.H. Attia and L. Kops, "System Approach to the Thermal Behavior and Deformation of Machine Tool Structures in Response to the Effect of Fixed Joints", A.S.M.E. Transactions, Journal of Engineering for Industry. Paper No: 80-WA/PROD-14, Winter Annual Meeting, Nov., 1980.

6. M.H. Attia and L. Kops, "A New Method for Determining the Thermal Contact Resistance at Machine Tool Joints", C.I.R.P., Vol. 30/1/1981, p 259.

7. B.A. Boley, J.H. Weiner, "Theory of Thermal Stresses". John Wiley and Sons., 1960.

8. J.B. Bryan, "International Status of Thermal Error Research" C.I.R.P., Vol. 16/1968, p-203.

9. A. Camera, M. Favareto, L. Militano, F. D'Aprile, "Analysis of the Thermal Behavior of a Machine Tool Table Using the Finite Element Method", C.I.R.P., Vol. 25/1/1976, p-297.

10. H.S. Carslaw and J.C. Jaeger, "Conduction of Heat in Solids". Oxford University Press, 1960.

11. C.P. Hemingray, "Some Aspects of the Accuracy Evaluation of Machine Tools", M.T.D.R., Conference Proceedings, Vol. 14, 1973, p 281.

12. C.P. Hemingray, "Positioning Accuracy of Numerically Controlled Machine Tools", M.T.D.R., Conference Proceedings, Vol. 12, 1971, p 319.

13. R. Hocken, J.A. Simpson, et al, "Three Dimensional Metrology", NBS, Washington, C.I.R.P., Vol. 26/2/1977, p 403.

14. K. Jutel, "Inspection and Acceptance Tests for NC Machine Tools", M.T.D.R., Conference Proceedings, Vol. 12, 1971, p 289.

15. Incropera and Dewitt, "Fundamentals of Heat Transfer", Wiley, N.Y. 1981.

16. Kiji Okushima and Yoshiaki Kakino, "An Analysis of Methods Used in Minimising Thermal Deformations of Machine Tools", M.T.D.R., Conference Proceedings, Vol. 16, 1975 p-195.

17. M.I. Koval and G.A. Igonin, "Comparative Analysis of Machining Error Components for a Heavy NC Machine Tool", Machines and Tooling, Vol. 50, No. 9, 1979, p 9.

18. W.J. Love and A.J. Scarr, "The Determination of the Volumetric Accuracy of Multi Axis Machines", M.T.D.R., Conference Proceedings, Vol.14, 1973,p 307.

19. E.R. McClure, "Thermally Induced Errors", Technology of Machine Tools, M.T.T.F., Vol. 5: Machine Tool Accuracy, Lawrence Livermore Laboratory, University of California, Livermore, California, UCRL-52960-5, 1980.

20. E. R. Mc Clure, "Manufacturing Accuracy Through the Control of Thermally Effects", D.Eng. Thesis, Lawrence Livermore National Laboratory, Livermore, California, URCL-50636, 1969.

21. R.L. Murty, "Thermal Deformation of a Semi-Automatic Machine : a Case Study", Precision Engineering, Vol. 2, No 1, Jan 1980, p 17.

22. W. Nowacki, "Thermoelasticity", International Series of monographs on Aeronautics and Astronautic, Division 1 : Solid and Structural Mechanics, Volume 3, Addison-Wesley Publishing Company, 1962.

23. K. Okushima, Y. Kakino, A. Higashimoto, "Compensation of Thermal Displacement by Coordinate System Correction", C.I.R.P. Vol. 24/1/1975 , p 327.

24. S.V.Patankar, "Numerical Heat Transfer and Fluid Flow", McGraw-Hill, 1982.

25. J. Peters, "Metrology in Design and Manufacturing - Facts and Trends", C.I.R.P., Vol. 26/1/1977, p 415.

26. V.T. Portman, "Error Summation in Analytical Calculation of Lathe Accuracy", Machines and Tooling, Vol. 51, No. 1, 1980, p 7.

27. T. Sata, T. Yasui, et al, "Development Of Machine Tool Structure Analysis Program (MASAP)", C.I.R.P., Vol. 25/1/1976, p 287.

AD-A163 598 THE SCIENCE OF AND ADVANCED TECHNOLOGY FOR COST-EFFECTIVE MANUFACTURE OF..(U) PURDUE UNIV LAFAYETTE IN SCHOOL OF INDUSTRIAL ENGINEERING 3/4

UNCLASSIFIED R VENUGOPAL ET AL. OCT 85 N00014-83-K-0385 F/G 13/9 NL

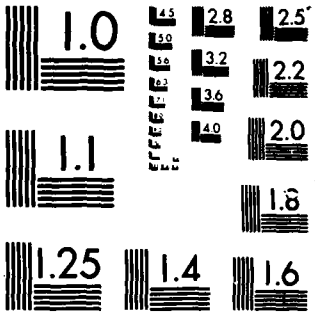

MICROCOPY RESOLUTION TEST CHART
NATIONAL BUREAU OF STANDARDS-1963-A

28. T. Sata, Y. Takeuchi and N. Okubo, "Improvement of Working Accuracy of a Machining Center by Computer Control Compensation", M.T.D.R., Conference Proceedings, Vol. 17, 1976, p 93.

29. T. Sata, Y. Takeuchi, N. Sato, N. Okubo, "Analysis of Thermal Deformation of Machine Tool Structure and its Application". M.T.D.R., Conference Proceedings, Vol. 17, 1973, p 275.

30. T. Sata, Y.Takeuchi, M. Sakamoto, M. Weck, "Improvement of Working Accuracy on NC Lathe by Compensation for Thermal Expansion of Tool", C.I.R.P., Vol. 30, 1981 p 445.

31. T. Sata, Y.Takeuchi, N. Okubo, "Control of The Thermal Deformation of a Machine Tool", M.T.D.R., Conference Proceedings, 1975, Vol. 16, p-203.

32. J.B. Bryan, "The Abbe Principle Revisited: An updated Interpretation", Precision Engineering, Vol. 1, No: 3, 1979.

33. R. Schultschik, "The Components of the Volumetric Accuracy", C.I.R.P., Vol. 25/1/1977, p 233.

34. G. Spur, P. DE Haas, "Thermal Behavior of NC Machine Tools", M.T.D.R., Conference Proceedings, Vol. 14, 1973, p 267.

35. Y. Takeuchi, M.Sakamoto, T. Sata, "Improvement in the Working Accuracy of an NC Lathe by Compensation for Thermal Expansion", Precision Engineering, Vol. 4, No 1, 1982, p-19.

36. S. Timoshenko and J.N. Goodier, "Theory of Elasticity", Mc Graw Hill, 1970.

37. J. Tlusty, G.F. Mutch, "Testing and Evaluating Thermal Deformations of Machine Tools", M.T.D.R., Conference Proceedings, Vol. 14, 1973, p 285.

38. M. Weck, L. Zangs, "Computing the Thermal Behavior of Machine Tools Using the Finite Element Method - Possibilities and Limitations", M.T.D.R., Conference Proceedings, Vol. 16, 1975, p 185.

39. H. Wiele, R. Mangelsdorf, H. Heinke, "Permanent Temperature-Control is Securing Technological Processes in Machine Tools", M.T.D.R., Conference Proceedings, Vol. 23, 1982, p-95.

40. "A Proposal for Defining and Specifying the Dimensional Uncertainity of Multi-Axis Measuring Machines", C.I.R.P. STC <ME> Working Party on 3DU, C.I.R.P., Vol. 27/2/1978, p 623.

41. Technology Of Machine Tools, M.T.T.F., Vol. 5: Machine Tool Accuracy, Lawrence Livermore Laboratory, University of California, Livermore, California, UCRL-52960-5, 1980.

42. P.A. McKeown, "'Mechatronics': The skill-base for Precision Engi Engineering", C.U.P.E. News, Issue 1, May 1983.

43. "Watching as Axis heat up and Grow", American Machinist, Nov 1984, p 146.

44. L.M. Kordysh, L.V. Margolin, "Thermal Calculations for the Actuating Mechanisms on the Feed Drives of NC Machine Tools", Russian Engineering, Stanki i Instrument, Vol. 54, Issue 5, 1983.

45. J. Tlusty, "Testing of Accuracy of NC Machine Tools", UCRL-52960 Supp. 1, Supplement 1 of Technology of Machine Tools, Lawrence Livermore Laboratory, University of California, Livermore, California, 1980.

46. M.M. Barash, C.R. Liu, "The Science of an Advanced Technology for Cost Effective Manufacture of High Precision engineering Products", Proposal for Research, Prepared by School of Industrial Engineering, Purdue University, West Lafayette, Indiana 47907, Oct, 1982.

47. D. Ramakrishna, "Operator-Theoretic Methods In Heat and Mass Transfer Problems", School of Chemical Engineering, Purdue University, W. Lafayette, Indiana 47907, June 30,1982.

48. R.D. Cook, "Concepts and applications of Finite Element Analysis", Wiley, 1981.

49. R.P. Paul, "Robot Manipulators: Mathematics, Programming and Control", MIT Press, 1981.

50. F. Koeingsberger, J. Tlusty, "Machine Tool Structures", Pergamon Press, 1970.

51. Ozisik, M. Necati,"Heat Conduction", Wiley, 1980.

52. "Calibration of a Machine Tool", Laser Measurement System, Application Note 156-4, Hewlett Packard Co., Santa Clara Div., Santa Clara, CA.

53. S.K. Lee, M.M. Barash, "Accuracy Improvement of CNC Machining Center by Using a Touch Probe", Annual Report, The Science of an Advanced Technology for Cost-Effective Manufacture of High Precision Engineering Products. Office Of Naval Research, Purdue University, W. Lafayette, IN 47906, Jan 1,1984 - Dec 31, 1984.

APPENDICES

Appendix 1

Table A1.1 Conditions for which Solutions Have been Obtained - z axis

Conditions	Heat Source cals/min	Type
1	900 cals/node	Continuous
2	1200 cals/node	Continuous
3	500 cals/node	Continuous
4	1000 cals/node	0<t<75 min (switched on and off at 15 min intervals)
	800 cals/node	75<t<360 min (switched on and off at 15 min intervals)

Z axis has 9 heat node points associated with it

0. Condition 4 is used for check of regression equation.

Table A1.2 Conditions for which Solutions Have been Obtained - x y axis

Conditions are	Heat Source cals/min/node					Type
	1	2	3	4	5	
1	1000	350	1110	440	650	Continuous
2	1500	500	1400	800	1000	Continuous
3	500	100	700	200	300	Continuous
4	750	200	1000	300	500	0<t<60 min (switched on and off at 15 min intervals)
	1000	500	1000	500	1000	t>60 min (switched on and off at 15 min intervals)

XY axis has the following number of heat nodes attached with it

Source	Number of nodes
1	8
2	4
3	6
4	6
5	18

0. Conditions 1-3 have spindle located half way along the y axis

   Condition 4 has the spindle located located at the lowest point on the y axis

   Condition 4 is used for check of regression equations.

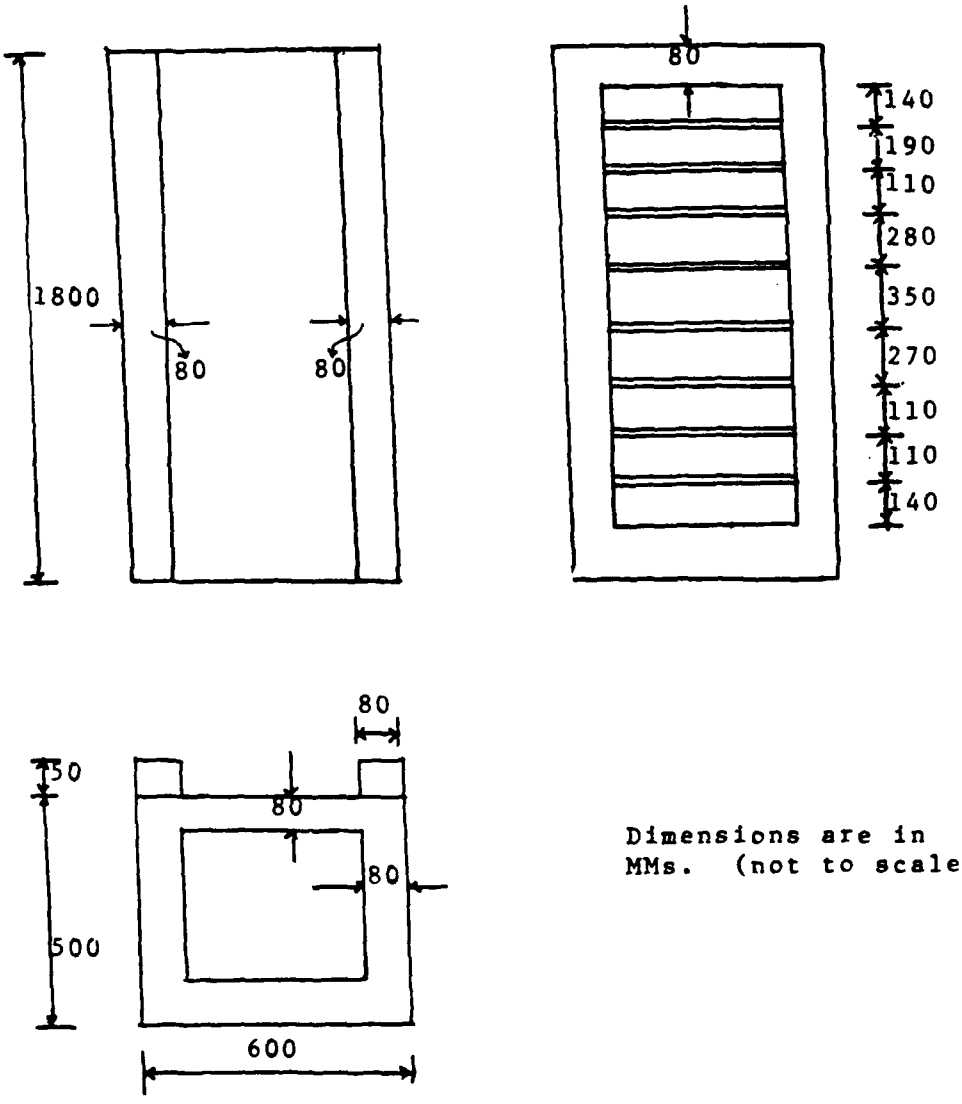

Dimensions are in MMs. (not to scale)

Fig. A1.1 Structure, x axis

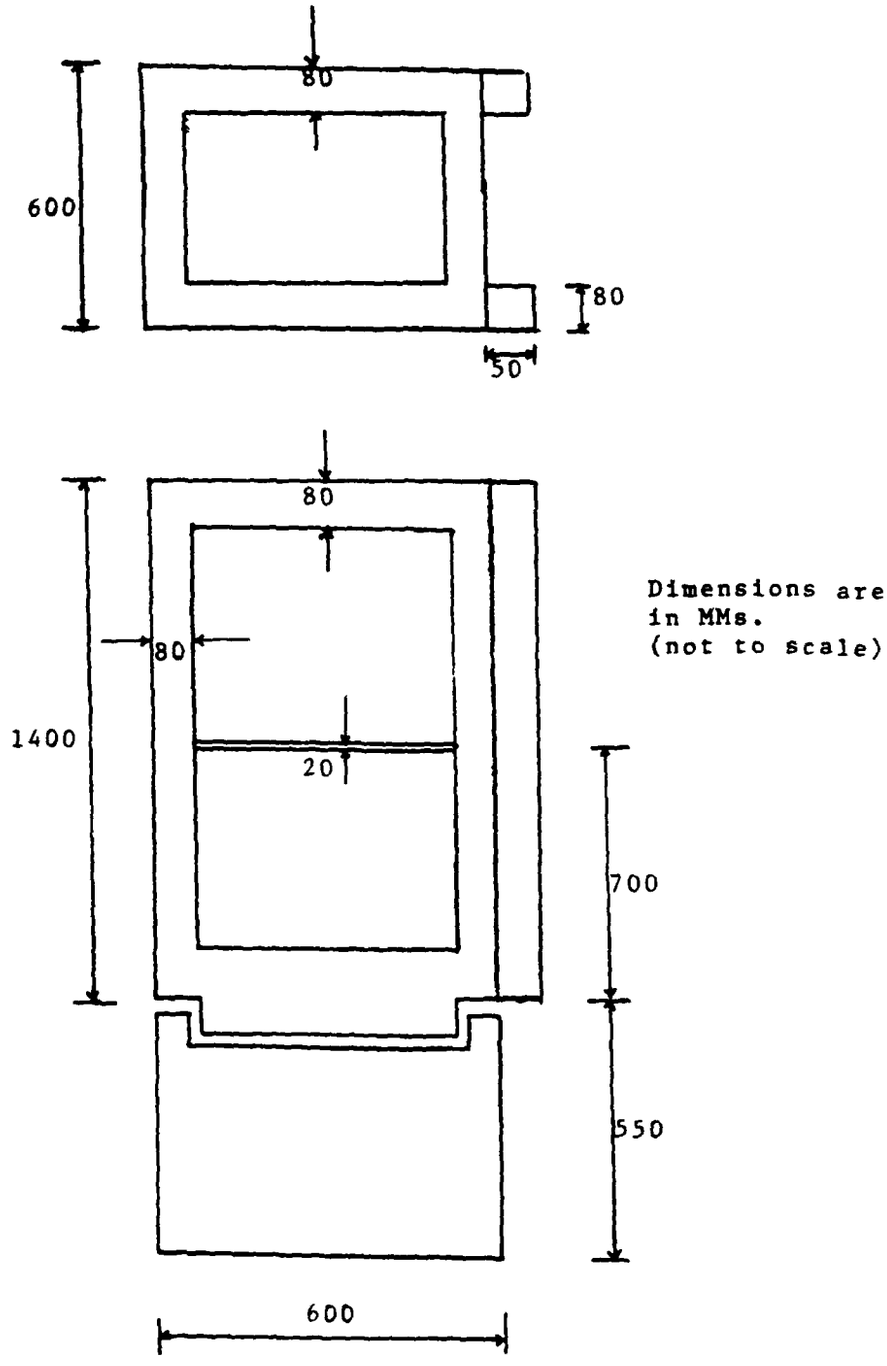

Fig. A1.2 Structure, y axis

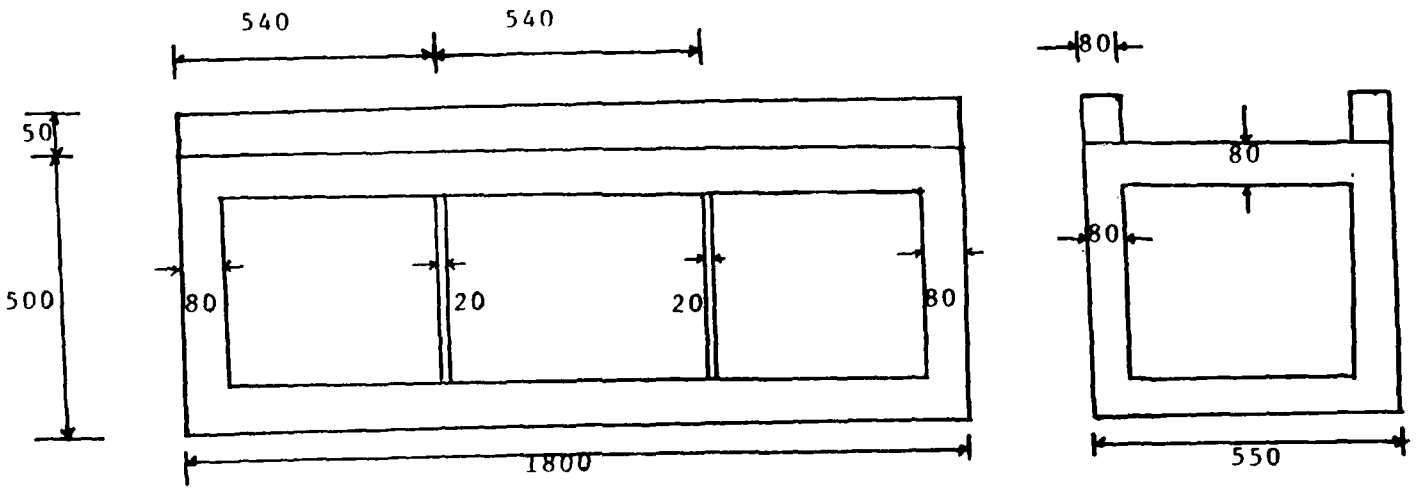

Dimensions are in MMs. (not to scale)

Fig. A1.3 Structure, z axis

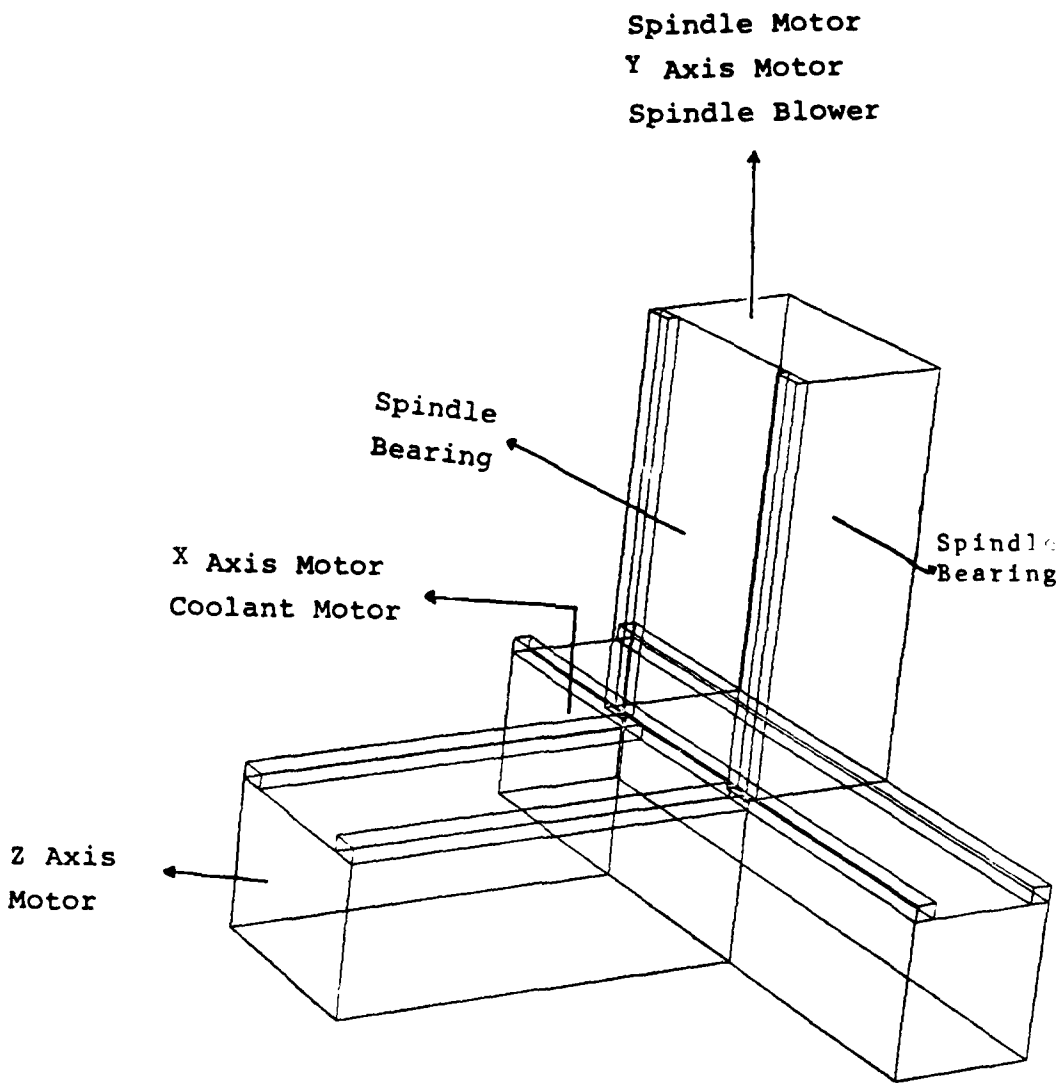

Fig. A1.4 Location of Heat Sources

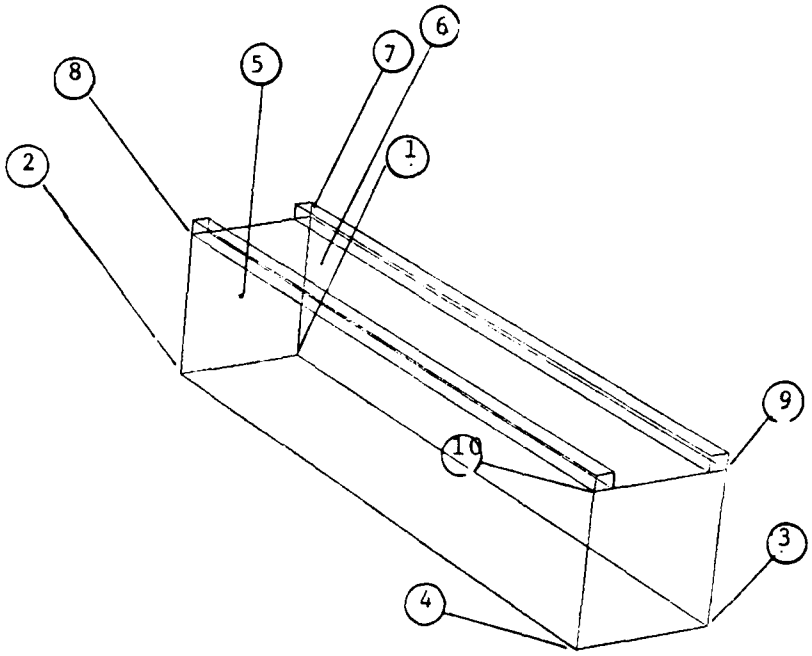

Fig. A1.5 Location of Temperature Points, x axis (Numerical)

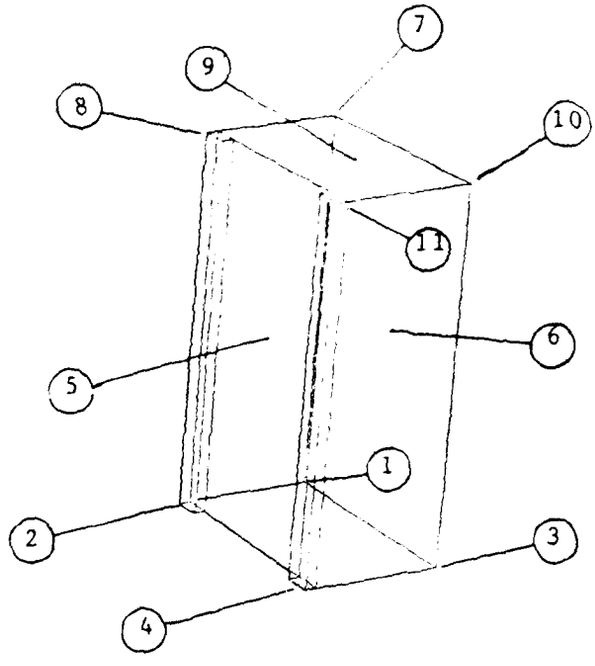

Fig. A1.6 Location of Temperature Points, y axis (Numerical)

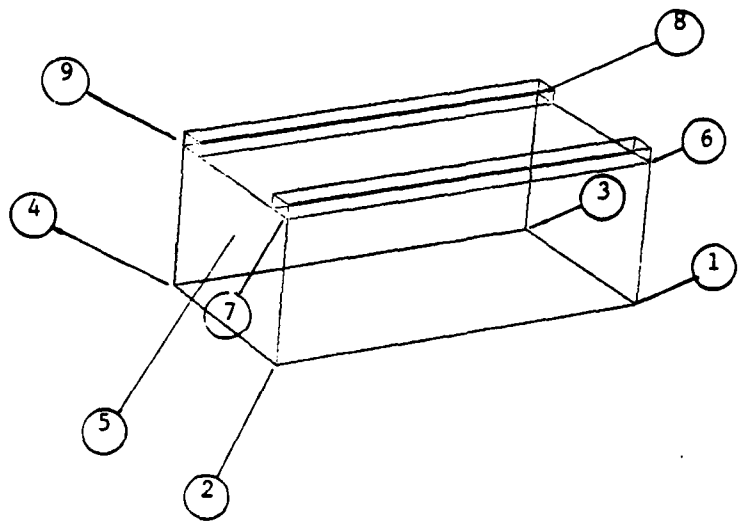

Fig. A1.7 Location of Temperature Points, z axis (Numerical)

Regression Equations, Numerical Method

The regression equations are as shown.

Figures A1.5, A1.6 and A1.7 show temperature points

In the equations that follow, errors are referred to as er1,er2,er3,er4,er5 and er6.

er1 refers to position error in x direction

er2 refers to straightness error in y direction

er3 refers to straightness error in z direction

er4 refers to pitch error

er5 refers to roll error

er6 refers to yaw error.

Errors er1,er2 and er3 are computed according to local coordinate systems shown in Figures A1.1, A1.2 and A1.3.

equations are given in the following order

Equation for $0 < t < 60$ mins

Equation for $t > 60$ mins

For equations in the $0 < t < 60$ mins range, all temperatures are argumented by 1.

This is done to ensure no problems arise in cases of temperatures which are zero.

Equations are marked with a *, it means that the equation is used to predict a constant value, because the variation of that particular error over distance is negligible.

X AXIS

The equations predict the value of the error multiplied by 1e8.

$$er1 = -0.16E9 \log(T5+1) - 0.79e10 \log(T3+1) + 8.9(X^4) \log(T3+1) + 40561182.0$$

$$er1 = -358423.46(X)(T6) + 65.1(X^2)(T6^2) - 105.27 (X^2)(T8^2) + 289200.6 (X)(T5) + 0.1446e9$$

$$er2 = 0.186e10 \log(T10+1) - 17672.6(X^2) \log(T2+1) - 0.171e9$$

$$er2 = 0.251e9\ T1 + 53971.5(X^2)(T3) + 44379242.0$$

$$er3 = 1919408.2(X) + 0.62e10 \log(T1+1) - 0.10e9(X) \log(T1+1) + 476472.1(X^2) \log(T1+1) - 3.9(X^4) \log(T1+1) - 0.27e9$$

$$er3 = -14386836.0(X) + 0.77e10(T10) - 50551674.0(X)(T3) + 0.1847e10$$

$$er4 = -8.9(X)$$

$$- 19804.5 \log(T7+1)$$
$$+ 213.3(X) \log(T7+1)$$
$$- 0.606(X^2) \log(T7+1) + 1705.5$$

$$er4 = 1875.9(T2)$$
$$+ 0.0267(X^2)(T6)$$
$$- 2092.4(T8)$$
$$- 0.044(X^2)(T7) - 156.10$$

$$er5 = - 1.03(X)$$
$$- 2207.3 \log(T2+1)$$
$$+ 15.2(X) \log(T2+1)$$
$$- 0.33e{-8}(X^5) \log(T2+1)$$
$$+ 186.35$$

$$er5 = 2.1(X)$$
$$- 96.2(T6)$$
$$+ 0.688(X)(T6)$$
$$- 0.312e{-7}(X^4)(T6) - 319.45$$

$$er6 = 2786.6 \log(T1+1)$$
$$- (0.3e{-5})(X^4) \log(T5+1)$$
$$- 63.13(X) \log(T2+1)$$
$$+ 0.346(X^2) \log(T8+1)$$
$$- 4.55(X) + 221.29$$

$$*er6 = -188.(T5)$$
$$+ 2.68(T6^2)$$
$$+ 245.3(T3)$$
$$- 1.22(T5^2) - 91.89$$

Y AXIS

The equations predict the value of the error multiplied by 1e8.

$$er1 = -0.27e-1(X^5)\log(T5+1) + 0.207e9$$

$$er1 = 0.591e9(T3) - 5.69(X^4) + 0.448e9$$

$$er2 = 19959656.(X)(\log(T8+1)^2) + 0.7(X^4) + 91534124.0$$

$$er2 = 3814105.8(X)(T8) - 0.126e9(T6) - 0.1738e9$$

$$er3 = 603806.(X^2)\log(T8+1) + 154989.2(X^2)(\log(T2+1)^2 - 12.49(X^4)\log(T6+1) - 18341835.0(X)\log(T2+1) + 0.1e10$$

$$er3 = 97743.7(X)(T10) + (0.157e10)$$

$$er4 = -0.38e-4(X^4)\log(T6+1) + 0.49(X^2)(\log(T5+1)^2) - 132.9$$

$$er4 = 0.904e-5(X^4)(T6) - 0.185(X^2)(T5) - 0.94e-6(X^4) + 12.2(X) - 0.15e-2(X^3)(T6) + 38.98(X)(T5)$$

$$- 1456.0(T5)$$

$$- 765.90$$

$$er5 = 1105.6 \log(T7+1)$$

$$- 11.8(X) \log(T8+1)$$

$$+ 0.21e-5(X^4) \log(T8+1)$$

$$+ 1.46(X)(\log(T10+1)^2)$$

$$- 15.5$$

$$er5 = - 0.117(X^2)(T5)$$

$$+ 17.6(X)(T5)$$

$$- 634.8(T6)$$

$$+ 47.11(X)$$

$$- 4670.46$$

$$er6 = 2026.3 \log(T11+1)$$

$$+ 15.45(X)(\log(T10+1)^2)$$

$$+ 413.9$$

$$*er6 = 509.7(T11) + 25.94$$

Z AXIS

The equations predict the value of the error multiplied by 1e8.

$$
\begin{aligned}
er1 = & -0.1e10 \log(T9+1) \\
& + 13669665.(X) \log(T9+1) \\
& + 94778.9(X^2) \log(T9+1) \\
& + 5025085.5
\end{aligned}
$$

$$
\begin{aligned}
er1 = & - 0.21e9(T9) \\
& + 2841241.2(X)(T1^2) \\
& + 280574.3(X)(T5) \\
& - 16829877.(X)(T1) \\
& + 30043250.0
\end{aligned}
$$

$$
\begin{aligned}
er2 = & 0.4e9 \log(T9+1) \\
& - 0.26e9 \log(T4+1) \\
& - 1475633.4(X)(\log(T9+1)^2) \\
& + 144233.0(X)(\log(T5+1)^2) \\
& + 5502256.3
\end{aligned}
$$

$$
\begin{aligned}
er2 = & 18844258.(T2) \\
& - 20672.7(X)(T5) \\
& - 13927269.(T9) \\
& + 1007418.9
\end{aligned}
$$

$$
\begin{aligned}
er3 = & 36466.9(X^2) \log(T4+1) \\
& + 0.96e9 \log(T9+1) \\
& - 7517186.9(X)(\log(T4+1)^2) \\
& - 0.57e9 \log(T4+1) \\
& - 0.79(X^4) \log(T5+1) \\
& + 14871443.0
\end{aligned}
$$

$$er3 = -8795646.5(X) + 0.29e10(T7) - 30796813(X)(T7) + 0.57e9$$

$$er4 = 3.63(X) - 7866.2 \log(T9+1) + 192.3(X) \log(T9+1) - 1.22(X^2) \log(T9+1) - 220.64$$

$$er4 = -574.8(T2) + 2.9(X)(T5) - 705.97$$

$$er5 = 503.91\log(T9+1) - 6.7(X)(\log(T4+1)^2) + 0.088(X^2) \log(T9+1) - 0.31e-3(X^3) \log(T4+1) - 263.4 \log(T4+1) - 2.25$$

$$er5 = 40.4(T9) - 0.89(X)(T9) + 0.62e-2(X^2)(T9) - 22.3$$

$$er6 = -0.28(X) - 192.4 \log(T4+1) + 9.05(X) \log(T9+1) - 0.112(X^2) \log(T9+1) + 0.408e-3(X^3) \log(T7+1)$$

$$
\begin{aligned}
er6 = \; & + 24.3 \\
& 4.7(X) \\
& - 18.6(T9) \\
& - 0.424e\text{-}1(X^2) \\
& + 0.0847(X)(T5) \\
& -102.18
\end{aligned}
$$

Table A1.3 Prediction Capabilities of Regression Equations (t>60 mins)

AXIS		X	Y	Z
er1	mean	2.04	0.45	0.16
	abs. mean	11.62	20.18	2.35
er2	mean	-0.57	0.5	-0.5
	abs. mean	6.2	0.6	1.9
er3	mean	2.64	0.5	10.8
	abs. mean	21.20	5.0	32.4
er4	mean	-0.21	6.3	0.1
	abs. mean	3.52	15.4	4.87
er5	mean	-4.6	-1.0	0.5
	abs. mean	30.9	8.2	20.9
er6	mean	-0.5	-0.5	18.3
	abs. mean	0.6	0.7	38.2

Table A1.4 Prediction Capabilities of Regression Equations (0<t<60 mins)

AXIS		X	Y	Z
er1	mean	3.1	8.6	0.5
	abs. mean	16.5	24.5	4.1
er2	mean	-0.2	-0.1	4.7
	abs. mean	6.2	1.03	44.1
er3	mean	9.2	0.5	15.2
	abs. mean	46.2	4.9	36.8
er4	mean	1.2	-1.0	-4.6
	abs. mean	12.2	10.8	25.4
er5	mean	6.2	3.35	12.7
	abs. mean	46.7	25.63	43.8
er6	mean	0.8	0.1	1.79
	abs.mean	33.9	3.46	4.87

The values are percentage error in prediction.

Appendix 2

Table A2.1 Location of Thermocouples on the x axis

Axis	Thermocouple #	Placement Point
x	1	Lead screw motor
	2	Lubricant motor
	3	Nut of lead screw
	4	Near lead screw motor
	5 - 12	On guideways
	13 - 16	On side plates
	17	On oil tank

Table A2.2 Location of Thermocouples on the y axis

Axis	Thermocouple #	Placement point
y	1	Lead screw motor
	2	Near lead screw motor
	3	Nut of lead screw
	4	Spindle motor
	5 - 12	On guideways, spindle side
	13 - 18	On back side
	19	Spindle blower
	20	On heater (simulating cutting)

Table A2.3 Location of Thermocouples on the z axis

Axis	Thermocouple #	Placement Point
z	1	Lead screw motor
	2	Near lead screw motor
	3	Nut of lead screw
	4	B axis motor
	5 - 12	On guideways
	13 - 16	On front Plate
	17 - 19	On side plates

In appendix 3, temperature readings are presented. The first of these readings is the room temperature reading. Rest of the temperature readings follow as described above. This will cause reading at thermocouple 5 to be shown in the sixth place.

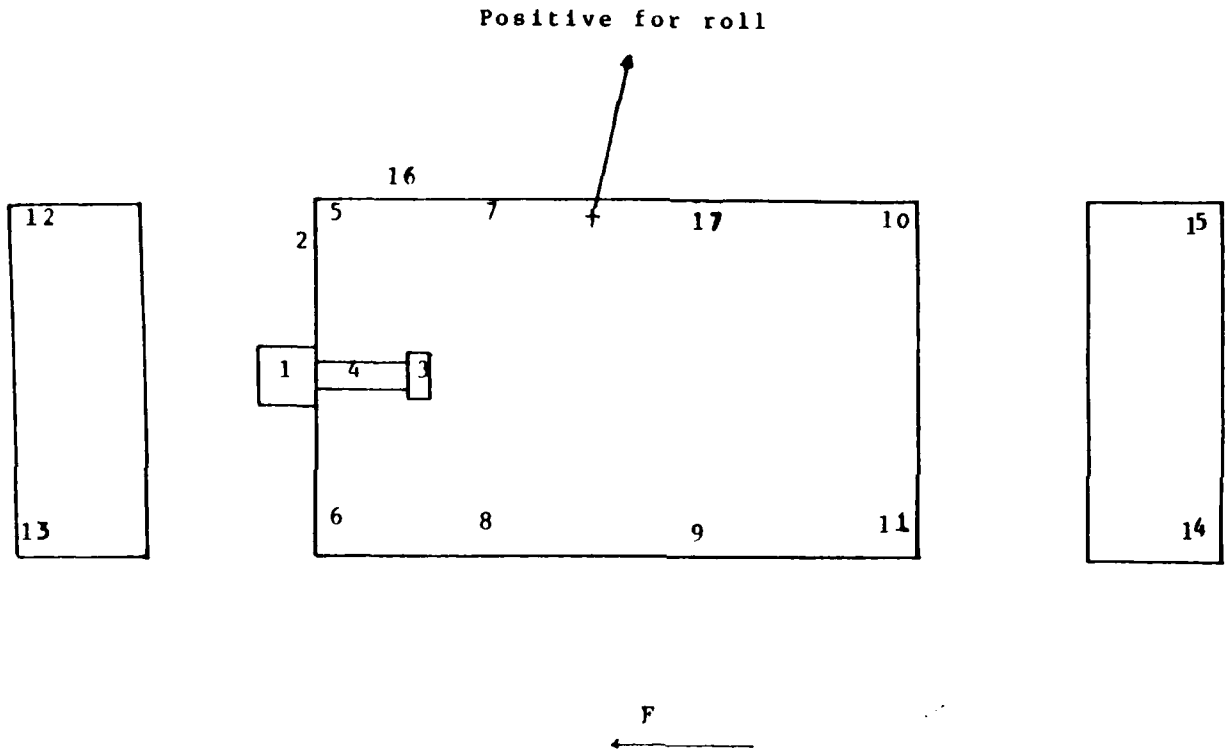

Fig. A2.1 Location of Temperature Points, x axis (Experimental)

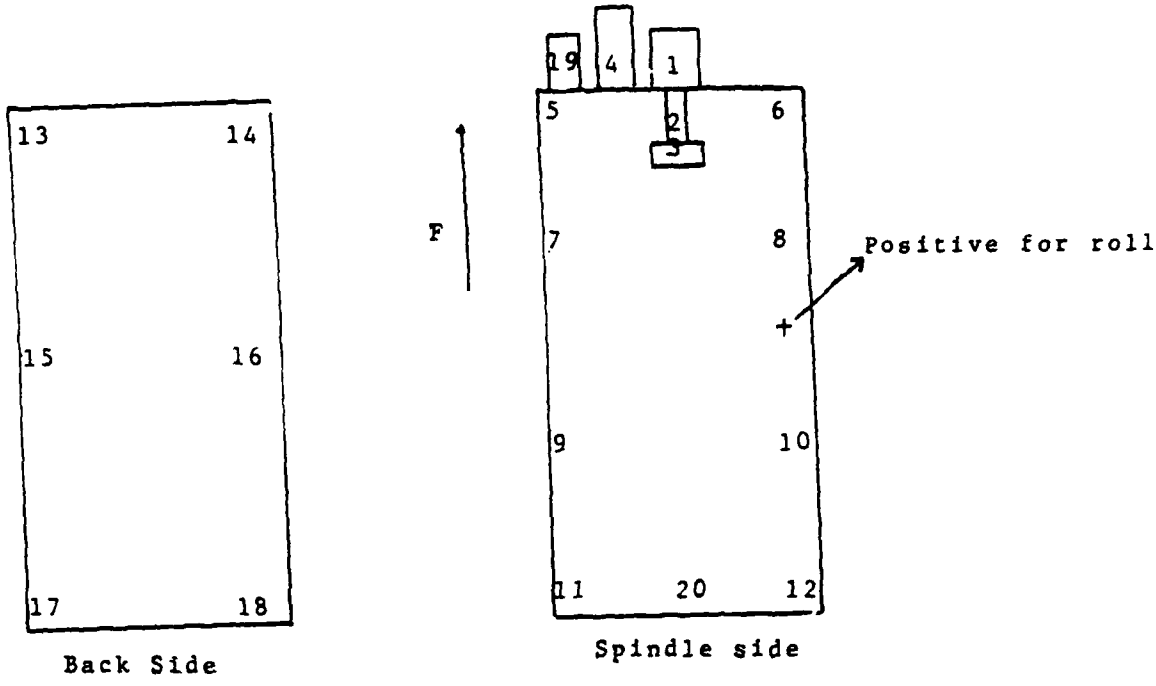

Fig. A2.2 Location of Temperature Points,
y axis (Experimental)

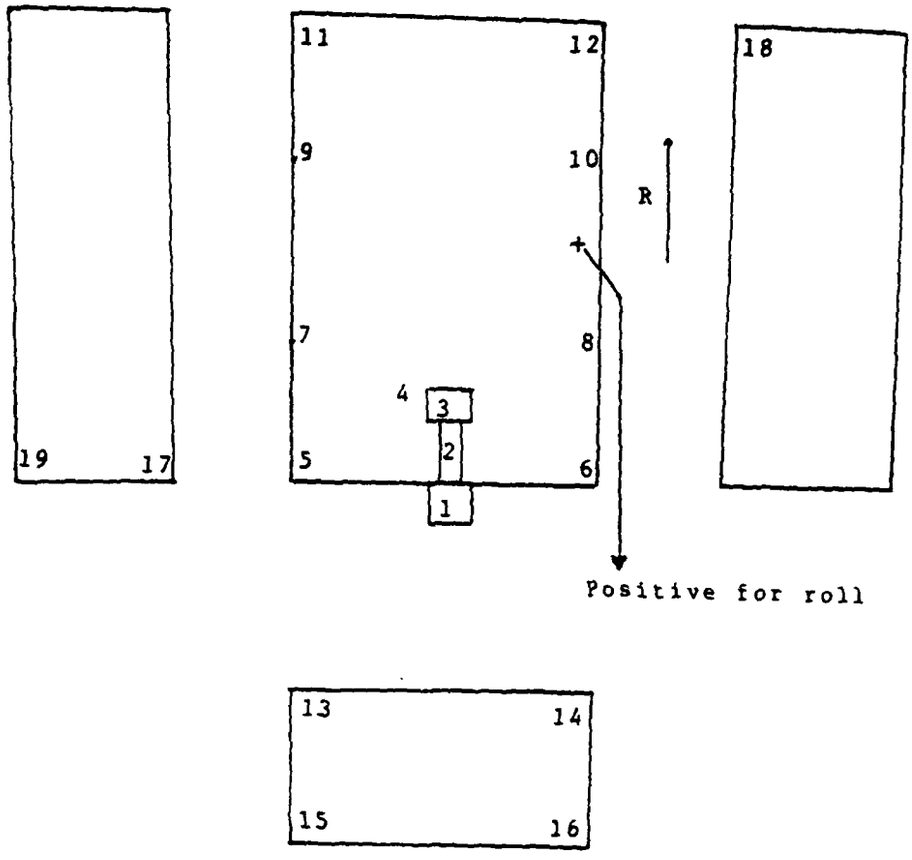

Fig. A2.3 Location of Temperature Points, z axis (Experimental)

Appendix 3

Conventions on Presentation of Results

The first two lines indicate the axis measured and the error being presented.

Then the initial starting point readings are given, this is also the point at which the zero of the laser is set.

The direction of laser indicates the positive direction. When set to F, movement of the reflector away from the laser is positive, while R indicates that movement of the reflector away from the laser is negative.

The experimental readings follow next.

Individual test numbers are indicated.

Positions at which readings are taken are given (marked POS).

Temperatures recorded are given (marked TEMP). The first temperature is the average room temperature. Then the temperatures around the machine follow as given in Appendix 2.

Mean of error is given (marked Mean).

Standard Deviation is given (marked SD).

Finally the actual errors are presented. Also spread from the mean (marked by up and down) is given. Regression equations are presented at the end. Temperatures used in the regression equation are as defined in Appendix 2. When referring to T5, the thermocouple 4 is the one being addressed.

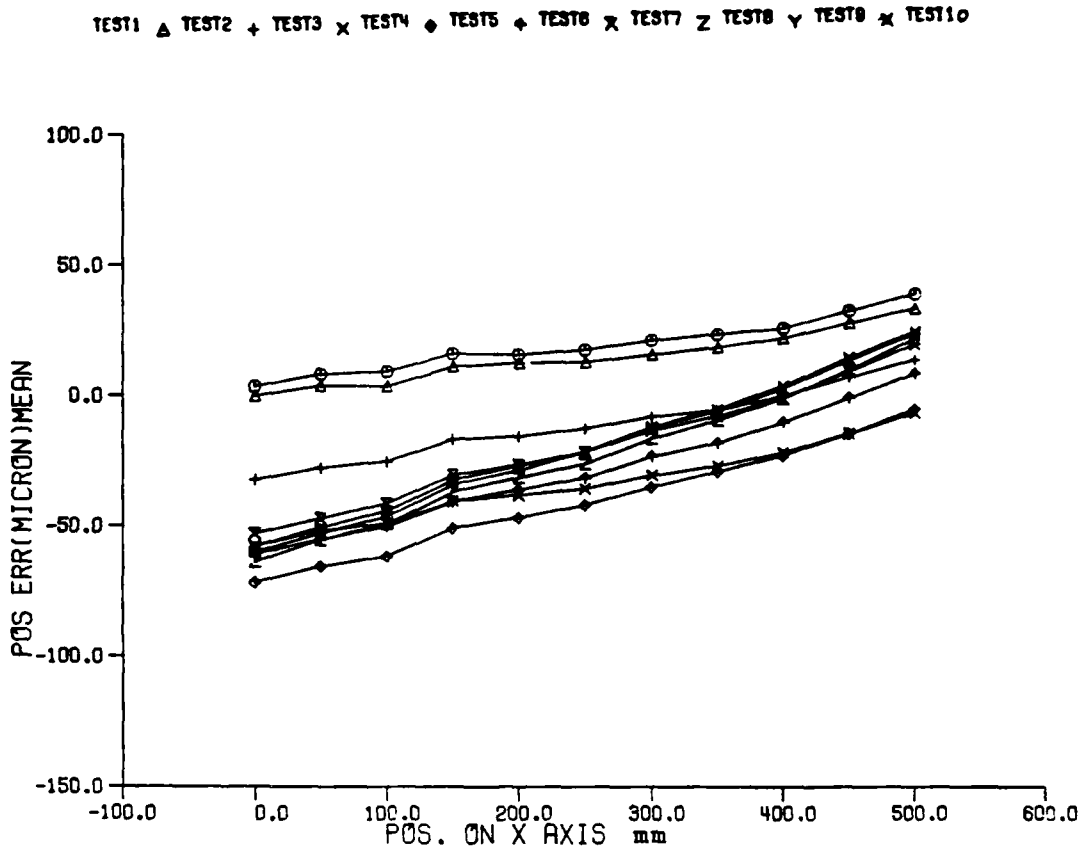
TEST1 TEST2 TEST3 TEST4 TEST5 TEST6 TEST7 TEST8 TEST9 TEST10
100.0
50.0
0.0
-50.0
-100.0
-150.0
POS ERR(MICRON)MEAN
-100.0
0.0
100.0
200.0
300.0
400.0
500.0
600.0
POS. ON X AXIS mm

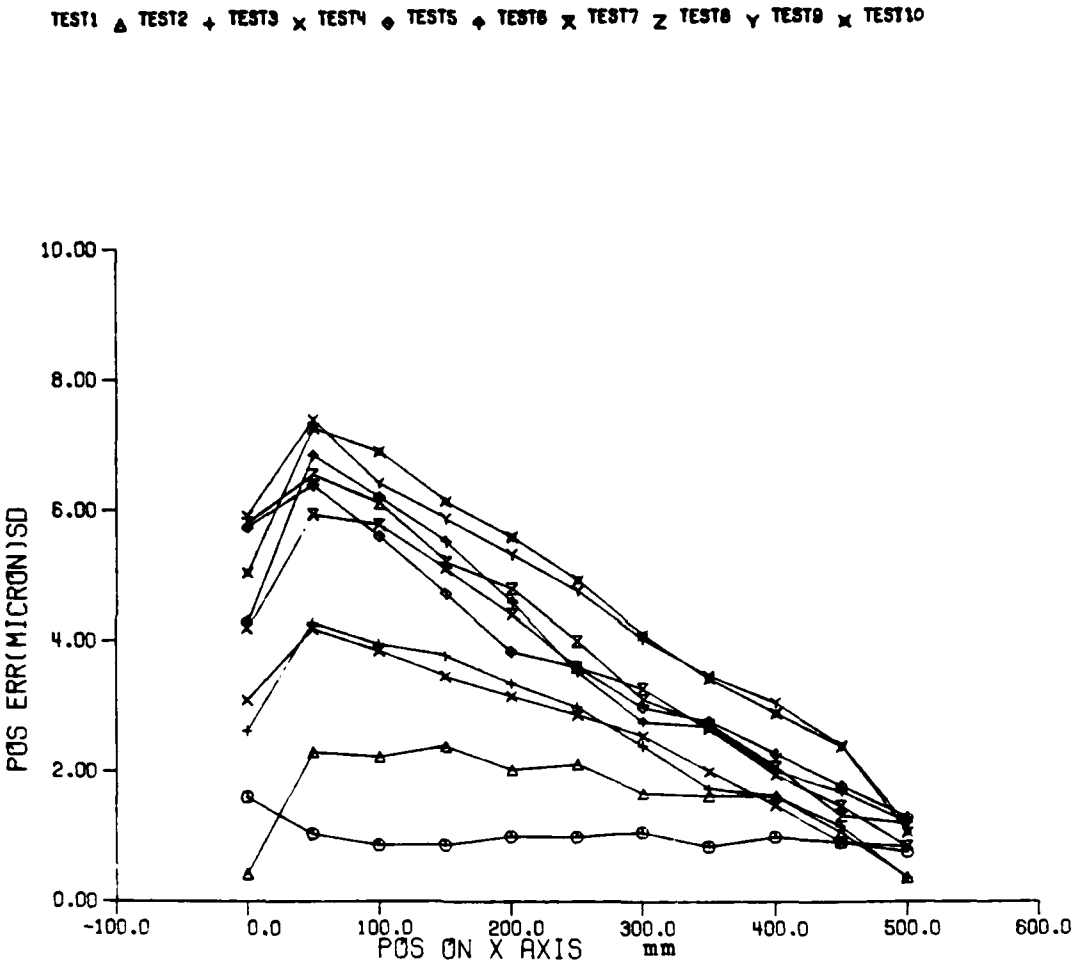
TEST1 TEST2 TEST3 TEST4 TEST5 TEST6 TEST7 TEST8 TEST9 TEST10
10.00
8.00
6.00
4.00
2.00
0.00
POS ERR(MICRON)SD
-100.0
0.0
100.0
200.0
300.0
400.0
500.0
600.0
POS ON X AXIS
mm

X AXIS

RESULTS OF POSITION ERROR (micron)

X axis at 20.000 mms
Y axis at 111.999 mms
Z axis at 660.400 mms (indep)
Dir of laser F

Test # 1

POS	0.	50.	100.	150.	200.	250.
POS	300.	350.	400.	450.	500.	
TEMP	24.30		24.38	33.84	24.56	24.34	24.88
TEMP	24.29		24.88	24.39	24.39	24.39	24.34
TEMP	25.71		24.26	24.14	24.17	36.94	24.56
MEAN	3.42		8.10	9.22	15.78	15.45	17.43
MEAN	21.21		23.63	25.93	32.68	39.20	
SD	1.60		1.04	0.87	0.87	1.00	1.00
SD	1.07		0.85	1.00	0.92	0.77	

Test # 2

POS	0.	50.	100.	150.	200.	250.
POS	300.	350.	400.	450.	500.	
TEMP	25.48		26.40	35.33	25.62	25.69	25.98
TEMP	24.85		25.54	24.78	24.73	25.00	24.73
TEMP	26.79		24.88	24.54	24.66	39.86	25.08
MEAN	-0.13		3.67	3.57	11.00	12.44	12.83
MEAN	15.73		18.60	22.20	28.07	33.67	
SD	0.42		2.30	2.23	2.39	2.03	2.11
SD	1.67		1.63	1.63	1.06	0.37	

Test # 3

POS	0	50.	100.	150.	200.	250.
POS	300	350	400.	450.	500.	
TEMP	26 88		29.59	36.88	27.17	28 10	27.34
TEMP	25 87		26.61	25.61	25.51	26 05	25 56
TEMP	27.95		25.88	25.21	25.56	41.80	26.07
MEAN	-32.20		-27.62	-24.98	-16.91	-15.55	-12.65
MEAN	-8.07		-5.50	-0.13	7.24	13.87	
SD	2.62		4.28	3.95	3.78	3 35	2 99
SD	2 40		1.74	1 63	1.16	0 37	

Test # 4

POS	0.	50.	100	150	200	250.
POS	300	350.	400.	450	500	
TEMP	27 70		31 61	37.64	28 23	29 43	28 36
TEMP	26 77		27 60	26 35	26 20	26 96	26 23
TEMP	28 75		26 72	25 84	26 33	42 69	27 06
MEAN	-57 55		-51.73	-48 87	-40 45	-38 14	-35 59
MEAN	-30 41		-26 67	-21 58	-14 28	-6 39	
SD	3 09		4 18	3 85	3 46	3 16	2 87
SD	2 55		2 00	1 48	0 91	0 85	

Test # 5

POS	0	50	100.	150	200.	250
POS	300.	350	400	450	500	
TEMP	27 73		33 67	38 26	29 72	31 40	29 16
TEMP	27 [illegible]		28 50	27 06	26 91	27 60	26 92
TEMP	29 [illegible]		27 31	26 30	26 94	43 14	27 94
MEAN	-71 [illegible]		-65 48	-61 57	-50 75	-46 84	-41 87
MEAN	-35 01		-28 98	-22 77	-14 53	-5 00	

SD	5.74	6.39	5.60	4.74	3.84	3.60
SD	2.99	2.77	2.27	1.78	1.30	

Test # 6

POS	0.	50.	100.	150.	200.	250.
POS	300.	350.	400.	450.	500.	
TEMP	27.80	35.33	38.57	30.37	32.21	30.10
TEMP	28.69	29.71	28.16	27.98	28.91	27.94
TEMP	29.84	28.13	26.93	27.69	43.49	29.18
MEAN	-60.85	-55.00	-50.12	-40.53	-36.06	-31.37
MEAN	-23.05	-17.90	-10.10	-0.62	8.70	
SD	4.30	6.84	6.20	5.52	4.61	3.53
SD	2.76	2.70	2.01	1.69	1.22	

Test # 7

POS	0.	50.	100.	150.	200.	250.
POS	300.	350.	400.	450.	500.	
TEMP	27.78	34.57	38.34	30.75	32.74	30.31
TEMP	28.86	29.90	28.44	28.27	29.15	28.12
TEMP	29.73	28.05	26.88	27.71	43.48	29.49
MEAN	-52.90	-47.05	-41.25	-30.47	-26.47	-21.63
MEAN	-13.42	-7.82	-1.13	9.44	19.80	
SD	4.18	5.94	5.78	5.11	4.41	3.60
SD	3.27	2.66	1.95	1.47	0.85	

Test # 8

POS	0.	50.	100.	150.	200.	250.
POS	300.	350.	400.	450.	500.	
TEMP	27.48	35.75	38.46	31.86	33.55	30.77
TEMP	29.31	30.43	28.99	28.87	29.65	28.63
TEMP	29.80	28.29	27.06	27.92	43.50	30.04
MEAN	-63.70	-55.30	-49.00	-36.88	-31.45	-26.00
MEAN	-16.27	-9.32	-0.89	10.22	22.14	
SD	5.80	6.54	6.11	5.22	4.81	4.00
SD	3.11	2.73	2.07	1.32	1.20	

Test # 9

POS	0.	50.	100.	150	200.	250.
POS	300.	350.	400.	450.	500.	
TEMP	27.30	35.54	38.42	31.92	33.44	30.85
TEMP	29.37	30.58	29.20	29.03	29.76	28.73
TEMP	29.81	28.37	27.12	28.00	43.35	30.27
MEAN	-60.13	-52.87	-46.32	-34.18	-28.68	-21.52
MEAN	-11.97	-5.15	3.75	14.72	24.89	
SD	5.91	7.39	6.41	5.88	5.33	4.78
SD	4.04	3.47	3.05	2.40	1.17	

Test # 10

POS	0.	50.	100	150.	200.	250.
POS	300.	350.	400.	450.	500.	
TEMP	27.30	35.34	38.39	31.62	33.34	30.89
TEMP	29.38	30.65	29.26	29.12	29.85	28.80
TEMP	29.92	28.48	27.31	28.14	43.31	30.29
MEAN	-57.70	-50.45	-44.02	-32.27	-26.80	-21.25
MEAN	-12.30	-5.77	2.83	13.83	23.86	
SD	5.04	7.25	6.90	6.14	5.60	4.94
SD	4.10	3.42	2.90	2.39	1.07	

ACTUAL DATA

						SPREAD Up	SPREAD Down
Test # 1							
0.20	4.30	4.30	4.10	4.10	3.50	-0.55	0.55
8.10	9.50	7.40	8.70	6.50	8.40	-0.77	0.77
9.10	10.60	8.70	9.60	8.00	9.30	-0.62	0.62
16.30	16.91	15.30	16.30	14.50	15.40	-0.42	0.42
16.01	16.80	14.89	16.01	14.01	15.00	-0.48	0.48
18.30	18.71	17.40	17.59	16.20	16.40	-0.13	0.13
22.19	22.61	21.00	21.39	20.11	19.99	-0.12	0.12
24.20	24.81	23.59	23.80	22.49	22.89	-0.20	0.20
27.01	26.89	26.21	26.00	24.69	24.81	0.04	-0.04
33.39	33.91	32.71	32.81	31.49	31.80	-0.15	0.15
40.01	40.01	39.31	39.31	38.30	38.30	0.	0.
Test # 2							
-0.80	-0.30	-0.30	0.10	0.10	0.40	-0.20	0.20
0.50	5.30	2.50	6.00	2.00	5.70	-2.00	2.00
1.10	5.40	1.70	6.10	1.90	5.20	-2.00	2.00
8.61	13.11	8.70	13.50	9.20	12.89	-2.17	2.17
11.00	14.01	10.30	14.60	10.50	14.21	-1.84	1.84
10.50	14.30	11.20	15.20	11.09	14.69	-1.90	1.90
14.01	17.09	14.10	17.61	14.59	17.00	-1.50	1.50
17.40	19.99	17.30	20.29	16.69	19.90	-1.46	1.46
21.00	23.90	20.69	23.80	20.51	23.28	-1.46	1.46
27.50	29.21	27.10	29.11	26.79	28.69	-0.94	0.94
34.00	34.00	33.81	33.81	33.20	33.20	0.	0.
Test # 3							
-36.10	-33.30	-33.30	-31.00	-31.00	-28.50	-1.27	1.27
-33.70	-25.80	-31.00	-23.80	-28.70	-22.70	-3.52	3.52
-30.70	-23.60	-28.10	-21.60	-25.60	-20.30	-3.15	3.15
-22.29	-15.59	-20.00	-13.79	-17.50	-12.30	-3.02	3.02
-20.20	-14.50	-18.30	-12.80	-16.20	-11.31	-2.68	2.68
-16.80	-11.60	-14.89	-10.41	-13.50	-8.70	-2.42	2.42
-11.41	-7.51	-9.89	-6.01	-8.61	-5.00	-1.90	1.90
-7.90	-4.91	-6.90	-4.21	-5.89	-3.20	-1.39	1.39
-2.01	0.61	-1.89	1.01	-0.49	2.01	-1.34	1.34
6.01	7.81	6.01	7.90	6.81	8.91	-0.97	0.97
13.49	13.49	13.79	13.79	14.31	14.31	0.	0.
Test # 4							
-62.30	-58.80	-58.80	-56.00	-56.00	-53.40	-1.48	1.48
-57.80	-51.30	-54.60	-48.50	-52.10	-46.10	-3.10	3.10
-54.20	-48.70	-52.10	-45.80	-48.60	-43.80	-2.77	2.77
-45.39	-39.99	-43.11	-37.90	-40.50	-35.80	-2.55	2.55
-42.80	-38.10	-40.41	-35.90	-37.70	-33.91	-2.17	2.17
-39.70	-35.90	-37.51	-33.91	-35.10	-31.40	-1.85	1.85
-33.81	-31.01	-32.10	-29.21	-29.91	-26.40	-1.54	1.54
-29.39	-27.01	-28.20	-25.60	-26.09	-23.71	-1.23	1.23
-23.59	-22.00	-22.71	-20.69	-21.00	-19.50	-0.85	0.85
-15.59	-14.50	-14.89	-13.89	-13.79	-13.00	-0.48	0.48
-7.39	-7.39	-6.29	-6.29	-5.49	-5.49	0.	0.
Test # 5							
-80.10	-74.20	-74.20	-68.60	-68.60	-63.80	-2.72	2.72
-74.90	-66.40	-69.30	-61.20	-64.60	-56.50	-4.12	4.12
-70.00	-63.00	-64.50	-58.00	-60.10	-53.80	-3.30	3.30
-59.89	-52.20	-53.21	-47.61	-49.50	-44.20	-2.75	2.75
-50.09	-43.10	-49.39	-44.69	-45.59	-41.20	-2.18	2.18
-47.30	-42.20	-43.59	-39.70	-40.41	-37.00	-1.90	1.90
-39.49	-36.10	-36.59	-33.51	-33.39	-31.01	-1.48	1.48

-32.99	-29.91	-30.30	-28.29	-27.59	-24.81	-1.31	1.31
-25.91	-24.11	-23.80	-22.19	-20.90	-19.71	-0.77	0.77
-16.69	-15.69	-15.59	-14.10	-13.09	-11.99	-0.60	0.60
-6.41	-6.41	-5.10	-5.10	-3.51	-3.51	0.	0
Test #	6						
-68.20	-61.70	-61.70	-59.10	-59.10	-55.30	-2.15	2.15
-65.40	-53.50	-60.30	-50.50	-53.90	-46.40	-4.87	4.87
-59.40	-48.60	-55.20	-46.00	-49.10	-42.40	-4.45	4.45
-48.60	-39.20	-45.30	-37.00	-39.60	-33.49	-3.97	3.97
-42.50	-35.29	-39.99	-33.00	-35.80	-29.80	-3.36	3.36
-36.61	-31.60	-33.91	-29.40	-30.11	-26.60	-2.17	2.17
-27.40	-22.89	-24.90	-21.61	-22.00	-19.50	-1.72	1.72
-22.09	-18.01	-19.71	-15.90	-17.09	-14.59	-1.73	1.73
-13.31	-10.10	-11.51	-8.61	-9.19	-7.90	-1.23	1.23
-3.30	-0.89	-1.71	0.61	0.40	1.19	-0.92	0.92
7.29	7.29	8.79	8.79	10.01	10.01	0.	0.
Test #	7						
-59.50	-54.50	-54.50	-50.70	-50.70	-47.50	-2.00	2.00
-56.00	-46.00	-51.10	-42.40	-47.30	-39.50	-4.42	4.42
-49.90	-40.40	-45.00	-36.90	-41.70	-33.60	-4.28	4.28
-37.99	-29.50	-33.80	-26.70	-31.20	-23.61	-3.87	3.87
-32.90	-25.60	-29.60	-22.99	-26.99	-20.71	-3.36	3.36
-26.99	-21.10	-24.09	-18.91	-21.80	-16.91	-2.66	2.66
-18.31	-13.09	-15.50	-11.20	-13.49	-8.91	-2.35	2.35
-11.51	-7.60	-9.70	-5.80	-8.21	-4.09	-1.99	1.99
-4.09	-1.10	-2.29	0.09	-1.01	1.59	-1.33	1.33
7.11	9.49	8.70	10.41	9.49	11.41	-1.00	1.00
18.80	18.80	19.90	19.90	20.69	20.69	0.	0.
Test #	8						
-72.90	-66.10	-66.10	-60.10	-60.10	-56.90	-2.67	2.67
-65.30	-55.40	-59.00	-50.70	-55.00	-46.40	-4.47	4.47
-58.20	-49.10	-52.80	-44.50	-48.60	-40.80	-4.20	4.20
-44.60	-37.60	-39.99	-33.10	-36.30	-29.69	-3.42	3.42
-38.70	-32.00	-34.30	-27.89	-30.81	-24.99	-3.15	3.15
-31.80	-27.21	-28.31	-23.30	-24.99	-20.40	-2.37	2.37
-20.81	-17.40	-17.79	-14.40	-15.41	-11.81	-1.73	1.73
-13.21	-10.80	-10.50	-7.81	-8.09	-5.49	-1.28	1.28
-3.81	-2.29	-1.71	0.31	0.40	1.80	-0.82	0.82
8.21	9.31	10.01	10.89	11.11	11.81	-0.45	0.45
20.81	20.81	22.09	22.09	23.50	23.50	0	0.
Test #	9						
-69.10	-63.00	-63.00	-56.20	-56.20	-53.30	-2.63	2.63
-63.50	-52.60	-57.80	-46.90	-53.50	-42.90	-5.40	5.40
-55.70	-46.10	-50.40	-41.20	-46.80	-37.70	-4.65	4.65
-43.00	-33.60	-37.80	-29.60	-34.70	-26.40	-4.32	4.32
-36.70	-27.80	-32.30	-24.60	-28.90	-21.80	-3.95	3.95
-28.59	-20.90	-24.70	-18.01	-21.80	-15.11	-3.51	3.51
-18.01	-11.51	-14.40	-9.00	-12.39	-6.50	-2.97	2.97
-10.41	-4.79	-7.20	-2.59	-5.40	-0.49	-2.52	2.52
-0.79	4.00	1.59	6.29	3.81	7.60	-2.21	2.21
11.51	14.50	12.70	16.60	15.01	18.01	-1.65	1.65
23.50	23.50	25.09	25.09	26.09	26.09	0.	0
Test #	10						
-65.00	-60.30	-60.30	-54.70	-54.70	-51.20	-2.30	2.30
-60.50	-49.40	-55.90	-44.40	-51.70	-40.80	-5.58	5.58
-53.50	-43.00	-49.20	-36.40	-45.30	-34.70	-5.32	5.32
-40.00	-31.40	-36.50	-27.21	-33.70	-24.09	-4.70	4.70
-34.61	-26.40	-31.01	-22.51	-27.21	-19.10	-4.14	4.14
-28.11	-21.50	-24.70	-17.59	-21.09	-14.21	-3.48	3.48
-17.70	-12.09	-15.41	-9.21	-12.70	-6.29	-2.97	2.97

-10 71	-5 80	-8 09	-3 30	-5 71	-1 01	-2. 40	2 40
-1 19	2. 99	0. 61	4. 70	2. 90	6 99	-2. 06	2 06
10 50	13 89	11. 99	15. 20	14. 10	17. 30	-1. 63	1 63
22. 71	22. 71	23. 80	23. 80	25. 09	25. 09	0	0.

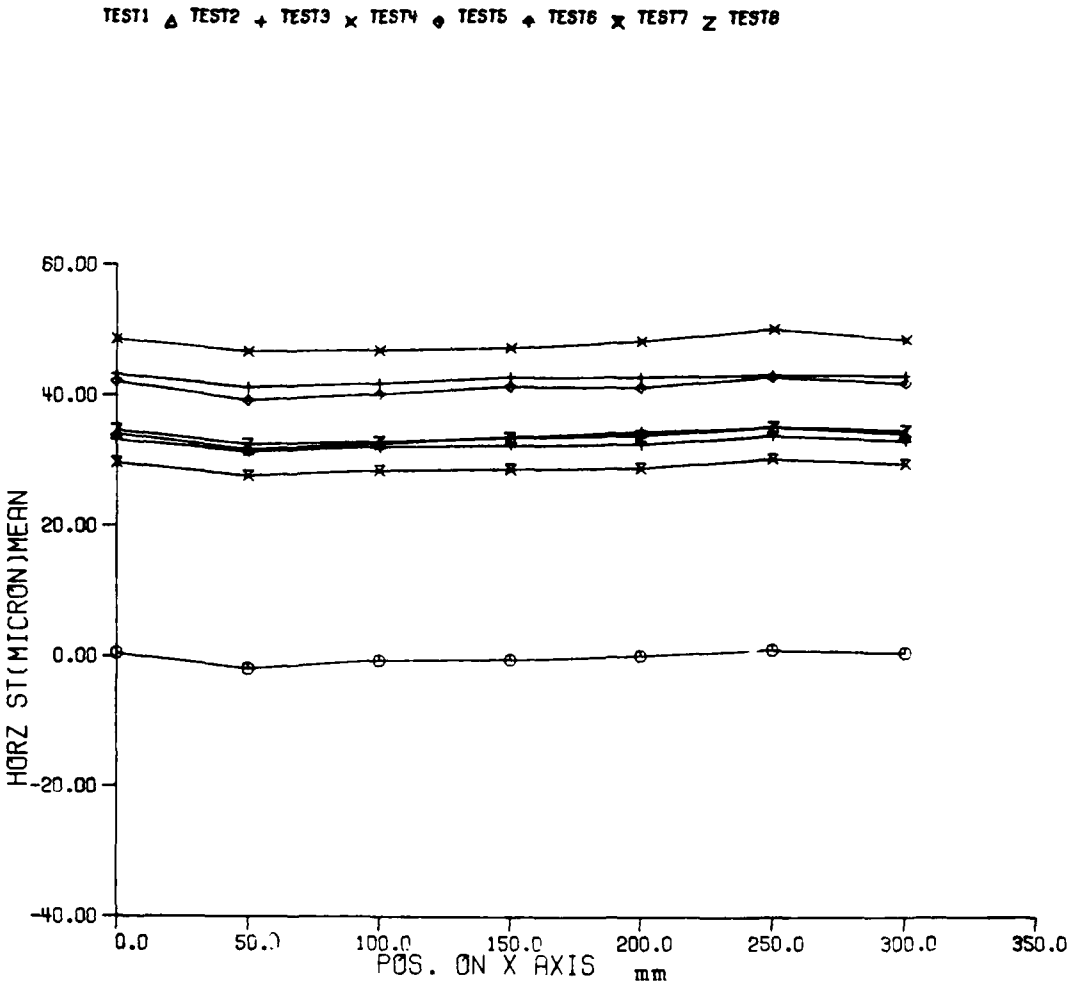
TEST1 TEST2 TEST3 TEST4 TEST5 TEST6 TEST7 TEST8
60.00
40.00
20.00
0.00
-20.00
-40.00
HORZ ST(MICRON)MEAN
0.0
50.0
100.0
150.0
200.0
250.0
300.0
350.0
POS. ON X AXIS
mm

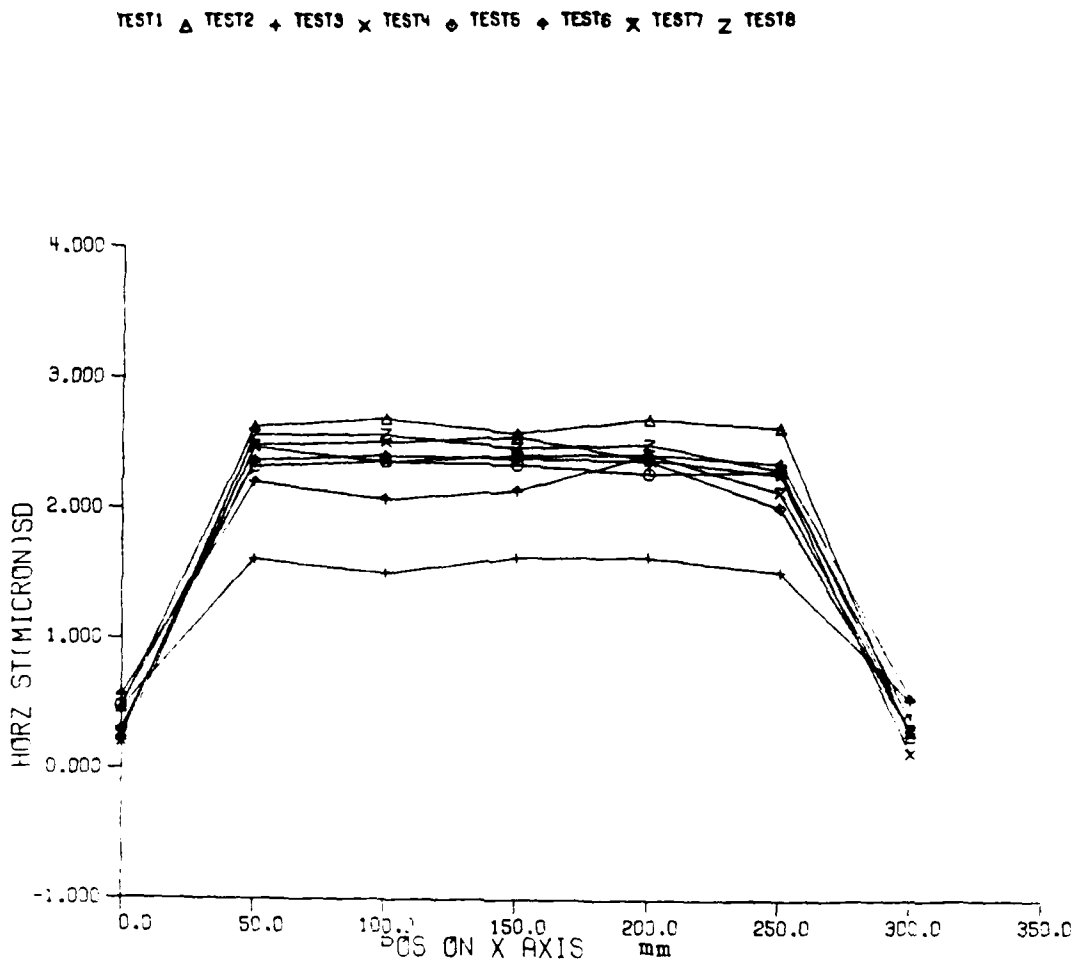
TEST1 △ TEST2 + TEST3 × TEST4 ⊕ TEST5 ✦ TEST6 ✖ TEST7 Z TEST8
4.000
3.000
2.000
1.000
0.000
-1.000
HORZ ST(MICRON)SD
0.0
50.0
100.0
150.0
200.0
250.0
300.0
350.0
POS ON X AXIS
mm

X AXIS

RESULTS OF HORZ. ST. ERROR (micron)

X axis at 25.000 mms
Y axis at 91.554 mms
Z axis at 320.165 mms
Dir of laser F

Test # 1

POS	0.	50.	100.	150.	200.	250.	300.
TEMP	25.20		24.93	34.10	~~24.88~~	~~24.54~~	24.95
TEMP	24.49		25.01	24.64	24.59	24.61	24.54
TEMP	25.69		24.35	24.15	24.20	36.47	24.79
MEAN	0.50		-1.90	-0.58	-0.48	0.18	1.12	0.73
SD	0.48		2.32	2.36	2.35	2.28	2.30	0.40

Test # 2

POS	0	50.	100.	150.	200.	250.	300.
TEMP	26.00		28.17	35.89	26.11	26.16	26.12
TEMP	25.03		25.94	24.94	24.86	25.21	24.99
TEMP	26.95		24.94	24.57	24.69	40.32	25.28
MEAN	34.13		31.70	32.65	33.70	34.48	35.23	34.37
SD	0.46		2.63	2.69	2.59	2.70	2.64	0.27

Test # 3

POS	0.	50.	100.	150.	200.	250.	300.
TEMP	26.58		30.22	36.60	~~27.80~~	~~27.76~~	27.25
TEMP	25.78		26.78	25.48	25.38	26.07	25.56
TEMP	27.71		25.65	25.06	25.38	41.49	26.14
MEAN	43.27		41.24	41.83	42.85	42.87	43.26	43.20
SD	0.46		1.61	1.51	1.63	1.64	1.53	0.54

Test # 4

POS	0.	50.	100.	150.	200.	250.	300.
TEMP	27.13		31.56	37.08	27.61	28.44	27.91
TEMP	26.37		27.59	26.05	25.93	26.76	26.05
TEMP	28.20		26.20	25.46	25.95	42.02	26.86
MEAN	48.70		46.71	46.92	47.35	48.41	50.32	48.77
SD	0.20		2.48	2.51	2.56	2.39	2.28	0.14

Test # 5

POS	0.	50.	100.	150.	200.	250.	300.
TEMP	25.18		30.84	35.67	28.13	28.62	28.11
TEMP	26.35		27.84	26.40	26.25	26.57	25.88
TEMP	27.57		26.25	24.58	25.24	41.07	27.23
MEAN	42.20		39.21	40.14	41.43	41.34	42.96	42.07
SD	0.30		2.37	2.41	2.40	2.38	2.02	0.31

Test # 6

POS	0.	50.	100.	150.	200.	250.	300.
TEMP	23.78		30.34	34.46	28.05	28.25	27.78
TEMP	26.05		27.78	26.49	26.29	26.41	25.73
TEMP	26.85		25.73	24.35	24.97	39.87	27.20
MEAN	33.20		31.35	32.12	32.33	32.60	33.93	33.20
SD	0.56		2.20	2.07	2.15	2.43	2.36	0.56

Test # 7

POS	0	50.	100	150	200	250.	300.
TEMP	23.65		28.07	33.44	~~26.95~~	~~26.97~~	27.34
TEMP	25.75		27.39	26.19	26.21	26.21	25.43

TEMP	26.31	25.16	24.00	24.67	38.96	27.17	
MEAN	29.70	27.64	28.48	28.73	28.94	30.34	29.63
SD	0.27	2.47	2.36	2.42	2.43	2.14	0.31

Test # 8

POS	0.	50.	100.	150.	200.	250.	300.
TEMP	24.30	28.34	34.76	27.70	27.31	27.34	
TEMP	25.62	27.49	26.24	26.16	26.41	25.65	
TEMP	26.87	25.28	24.03	24.77	40.04	27.09	
MEAN	34.70	32.48	32.87	33.57	33.93	35.28	34.80
SD	0.25	2.56	2.57	2.48	2.51	2.31	0.31

ACTUAL DATA

						SPREAD Up	SPREAD Down
Test # 1							
-0.20	0.30	0.30	0.70	0.70	1.20	-0.23	0.23
-4.23	-0.35	-4.03	0.13	-3.70	0.78	-2.09	2.09
-3.07	1.00	-2.67	1.57	-2.40	2.07	-2.13	2.13
-2.90	1.15	-2.60	1.60	-2.30	2.15	-2.12	2.12
-2.33	1.70	-1.93	2.23	-1.30	2.73	-2.04	2.04
-1.37	2.65	-0.97	3.17	-0.50	3.72	-2.06	2.06
0.30	0.30	0.70	0.70	1.20	1.20	0.	0.
Test # 2							
33.30	34.10	34.10	34.30	34.30	34.70	-0.23	0.23
28.78	33.62	29.48	34.32	29.72	34.28	-2.37	2.37
29.57	34.73	30.47	35.33	30.63	35.17	-2.43	2.43
30.85	35.95	31.55	36.05	31.65	36.15	-2.35	2.35
31.43	36.57	32.23	36.97	32.47	37.23	-2.44	2.44
32.02	37.18	33.32	37.68	33.28	37.92	-2.36	2.36
34.10	34.10	34.30	34.30	34.70	34.70	0.00	0.00
Test # 3							
42.90	43.50	43.50	43.60	43.60	42.50	0.07	-0.07
39.53	42.93	39.82	43.03	40.10	42.02	-1.42	1.42
40.27	43.37	40.43	43.57	40.80	42.53	-1.33	1.33
41.00	44.50	41.25	44.60	42.00	43.75	-1.43	1.43
41.03	44.53	41.27	44.63	42.00	43.77	-1.44	1.44
41.57	44.87	41.98	44.97	42.20	43.98	-1.34	1.34
43.50	43.50	43.60	43.60	42.50	42.50	0.	0.
Test # 4							
48.40	48.60	48.60	48.90	48.90	48.80	-0.07	0.07
44.58	48.72	44.52	48.97	44.25	49.23	-2.26	2.26
44.57	49.03	44.53	49.23	44.80	49.37	-2.29	2.29
44.95	49.45	44.95	49.90	45.15	49.70	-2.33	2.33
46.03	50.47	46.27	50.67	46.40	50.63	-2.18	2.18
48.12	52.08	48.18	52.53	48.45	52.57	-2.07	2.07
48.60	48.60	48.90	48.90	48.80	48.80	0.	0.
Test # 5							
42.50	42.10	42.10	42.40	42.40	41.70	0.13	-0.13
37.12	41.45	36.95	41.40	37.07	41.25	-2.16	2.16
38.13	42.60	37.70	42.30	38.03	42.10	-2.19	2.19
39.35	43.75	39.05	44.00	39.40	43.05	-2.17	2.17
39.27	43.80	38.90	43.50	39.37	43.20	-2.16	2.16
41.28	44.95	40.85	44.90	41.23	44.55	-1.84	1.84
42.10	42.10	42.40	42.40	41.70	41.70	0.00	0.00
Test # 6							
33.00	32.70	32.70	33.90	33.90	33.00	-0.00	-0.00
29.67	32.82	29.37	33.77	29.07	33.42	-1.98	1.98

30.63	33.33	30.13	34.53	30.03	34.03	-1.85	1.85
30.60	33.75	30.30	34.80	30.30	34.25	-1.93	1.93
30.37	33.97	30.17	35.47	30.77	34.87	-2.17	2.17
31.73	35.28	31.53	36.83	32.23	35.98	-2.10	2.10
32.70	32.70	33.90	33.90	33.00	33.00	0.	0.
Test #	7						
29.70	30.00	30.00	29.60	29.60	29.30	0.07	-0.07
25.83	30.08	25.22	29.85	25.15	29.70	-2.24	2.24
26.17	30.67	26.63	30.90	26.20	30.30	-2.14	2.14
26.70	30.95	26.55	31.15	26.35	30.70	-2.20	2.20
26.63	31.43	27.07	31.10	26.50	30.90	-2.21	2.21
28.37	32.62	28.58	32.25	28.25	32.00	-1.94	1.94
30.00	30.00	29.60	29.60	29.30	29.30	0.	0.
Test #	8						
34.60	34.60	34.60	34.60	34.60	35.20	-0.10	0.10
30.03	34.63	30.12	34.72	30.30	35.10	-2.33	2.33
30.57	34.87	30.43	35.13	30.60	35.60	-2.33	2.33
31.30	35.60	31.15	35.65	31.50	36.20	-2.25	2.25
31.63	35.93	31.77	35.87	31.60	36.80	-2.27	2.27
33.07	37.17	33.18	37.18	33.30	37.80	-2.10	2.10
34.60	34.60	34.60	34.60	35.20	35.20	0.	0.

Regression Equation

T17*10.30 - 4.07*T3 + 0.19e-4*X*X + 1.88*T15
- 282.84

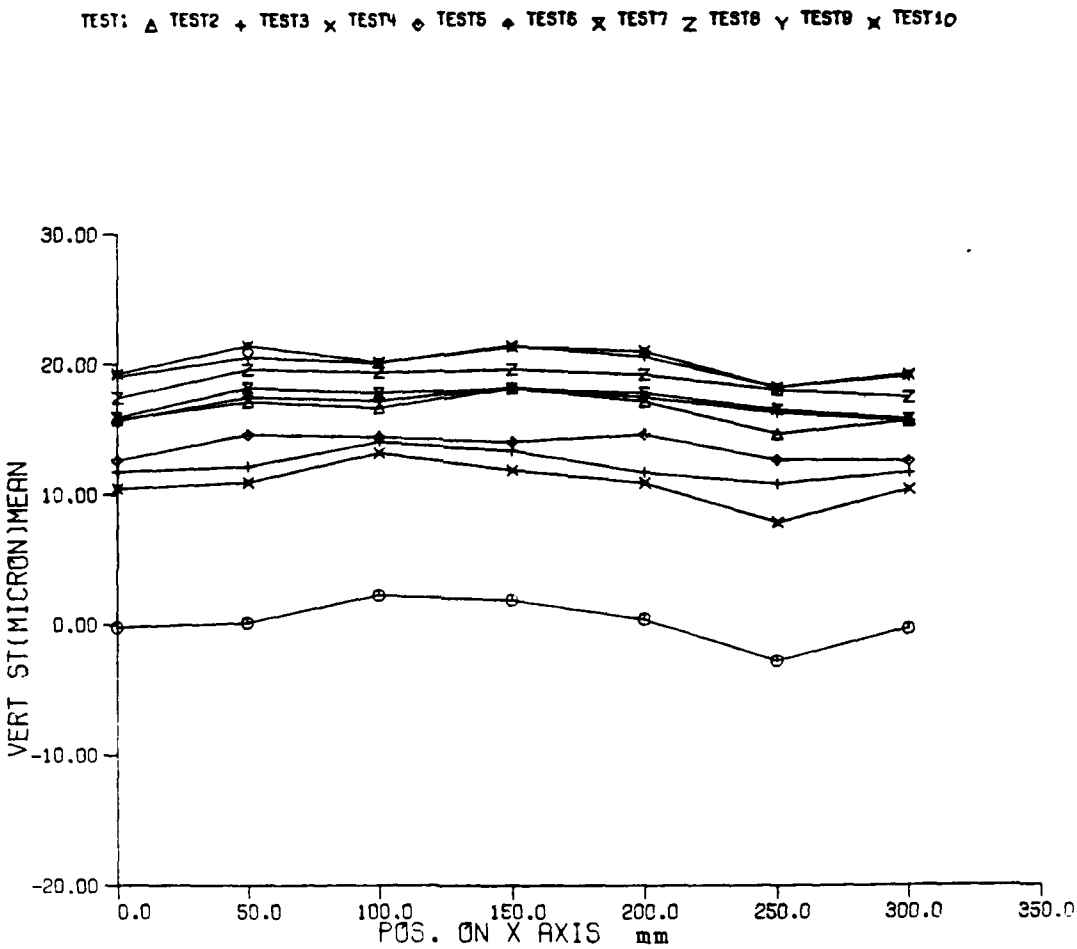
TEST: TEST2 TEST3 TEST4 TEST5 TEST6 TEST7 TEST8 TEST9 TEST10
30.00
20.00
10.00
0.00
-10.00
-20.00
VERT ST(MICRØN)MEAN
0.0
50.0
100.0
150.0
200.0
250.0
300.0
350.0
POS. ØN X AXIS mm

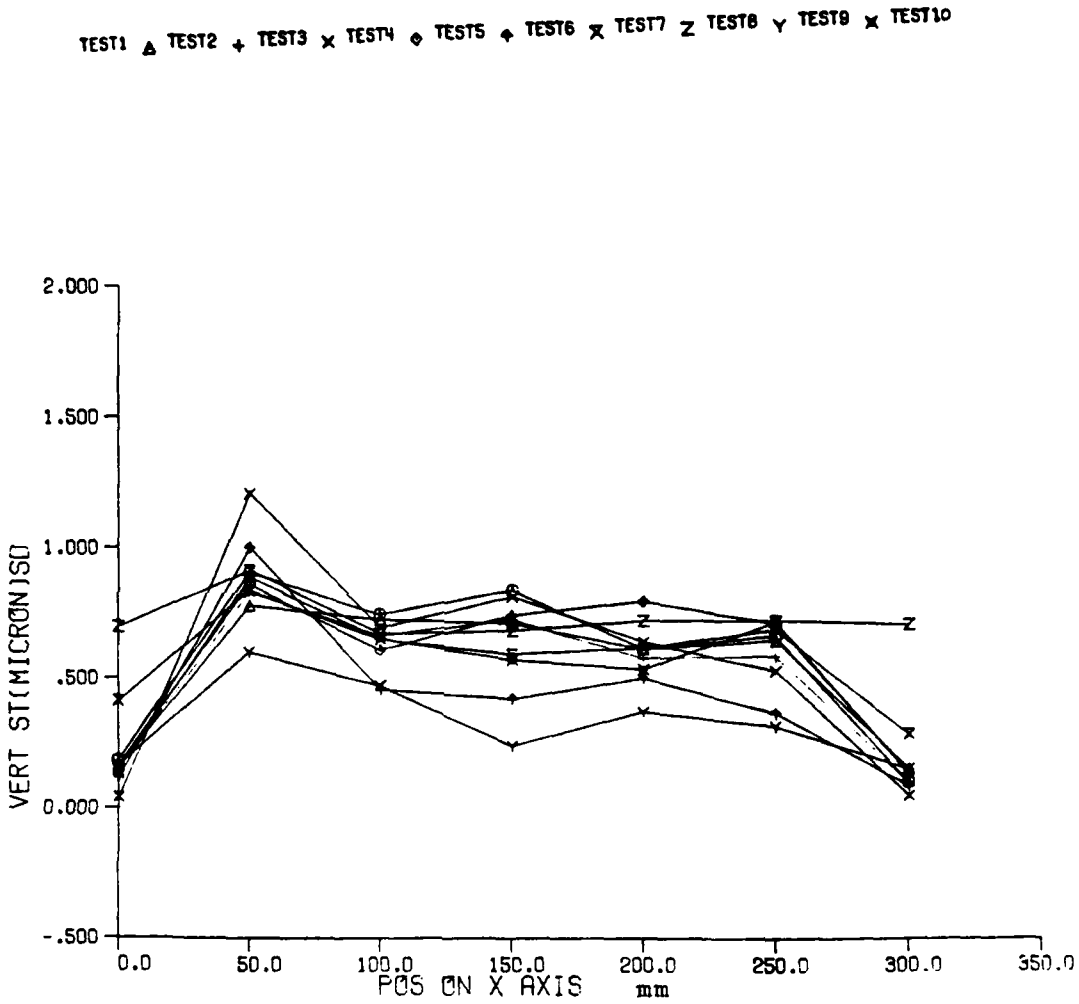
TEST1 TEST2 TEST3 TEST4 TEST5 TEST6 TEST7 TEST8 TEST9 TEST10
2.000
1.500
1.000
.500
0.000
-.500
VERT ST(MICRØN)SD
0.0
50.0
100.0
150.0
200.0
250.0
300.0
350.0
PØS ØN X AXIS mm

X AXIS

RESULTS OF VERT. ST. ERROR (micron)

X axis at 25.000 mms
Y axis at 90.353 mms
Z axis at 319.260 mms
Dir of laser F

Test # 1

POS	0.	50.	100.	150.	200.	250.	300.
TEMP	24.90		25.39		34.79	26.66	26.19	26.05
TEMP	25.02		26.02		25.22	25.17	25.22	25.02
TEMP	26.56		24.87		24.31	24.51	39.43	25.54
MEAN	-0.22		0.17		2.29	1.89	0.44	-2.75	-0.27
SD	0.18		0.90		0.74	0.84	0.62	0.66	0.10

Test # 2

POS	0.	50.	100.	150.	200.	250.	300.
TEMP	24.90		25.76		34.94	26.05	25.73	26.52
TEMP	25.19		26.32		25.34	25.24	25.47	25.05
TEMP	26.84		25.05		24.36	24.68	40.19	25.79
MEAN	15.78		17.11		16.63	18.21	17.17	14.68	15.70
SD	0.16		0.78		0.72	0.71	0.61	0.65	0.15

Test # 3

POS	0.	50.	100.	150.	200.	250.	300.
TEMP	25.03		26.88		35.27	26.63	26.39	27.05
TEMP	25.51		26.83		25.58	25.48	25.97	25.33
TEMP	27.15		25.33		24.57	25.02	40.52	26.24
MEAN	11.77		12.15		14.05	13.40	11.72	10.83	11.73
SD	0.15		0.83		0.66	0.73	0.58	0.59	0.10

Test # 4

POS	0.	50.	100.	150.	200.	250.	300.
TEMP	25.25		27.94		35.81	27.01	27.01	27.50
TEMP	25.88		27.25		25.91	25.81	26.45	25.69
TEMP	27.55		25.71		24.85	25.42	41.22	26.76
MEAN	10.48		10.94		13.22	11.89	10.93	7.86	10.47
SD	0.04		1.21		0.69	0.81	0.64	0.53	0.05

Test # 5

POS	0.	50.	100.	150.	200.	250.	300.
TEMP	25.13		29.15		36.00	27.86	27.94	27.86
TEMP	26.20		27.64		26.22	26.10	26.86	26.00
TEMP	27.74		25.95		25.07	25.73	41.21	27.13
MEAN	12.65		14.61		14.42	14.06	14.63	12.68	12.63
SD	0.16		0.86		0.61	0.74	0.80	0.71	0.14

Test # 6

POS	0.	50.	100.	150.	200.	250.	300.
TEMP	25.15		30.24		35.73	28.24	28.37	28.05
TEMP	26.39		27.90		26.53	26.36	26.92	25.99
TEMP	27.61		26.04		24.45	25.36	41.25	27.41
MEAN	15.68		17.45		17.17	18.26	17.48	16.31	15.70
SD	0.12		1.00		0.46	0.42	0.50	0.37	0.09

Test # 7

POS	0.	50.	100.	150.	200.	250.	300.
TEMP	25.05		28.64		35.54	27.22	27.44	28.10
TEMP	26.44		28.01		26.51	26.37	26.93	25.95

TEMP	27.52	25.98	24.23	25.19	41.21	27.57	
MEAN	15.90	18.17	17.78	18.15	17.82	16.51	15.83
SD	0.41	0.84	0.65	0.59	0.62	0.69	0.29

Test # 8

POS	0.	50.	100.	150.	200.	250.	300.
TEMP	25.00	29.57	35.47	28.32	28.15	28.05	
TEMP	26.37	28.05	26.66	26.44	26.98	25.98	
TEMP	27.44	25.90	24.18	25.14	41.02	27.59	
MEAN	17.42	19.58	19.36	19.63	19.22	18.07	17.50
SD	0.70	0.91	0.67	0.68	0.72	0.72	0.71

Test # 9

POS	0.	50.	100.	150.	200.	250.	300.
TEMP	24.88	29.81	35.40	28.35	28.25	28.08	
TEMP	26.37	28.05	26.71	26.46	26.98	25.97	
TEMP	27.39	25.93	24.16	25.14	40.92	27.59	
MEAN	19.05	20.49	20.08	21.44	20.60	18.26	19.10
SD	0.16	0.60	0.47	0.24	0.37	0.32	0.15

Test # 10

POS	0.	50.	100.	150.	200.	250.	300.
TEMP	24.90	29.96	35.21	28.38	28.28	28.06	
TEMP	26.33	28.06	26.72	26.47	27.01	25.98	
TEMP	27.35	25.88	24.17	25.15	40.88	27.62	
MEAN	19.28	21.41	20.14	21.36	21.02	18.24	19.27
SD	0.15	0.89	0.65	0.57	0.54	0.72	0.14

ACTUAL DATA

						SPREAD Up	SPREAD Down
Test # 1							
0.10	-0.20	-0.20	-0.40	-0.40	-0.20	0.05	-0.05
1.13	-0.52	0.75	-0.88	1.05	-0.52	0.81	-0.81
2.67	2.77	2.20	0.83	2.50	2.77	0.17	-0.17
2.90	1.25	2.35	0.95	2.65	1.25	0.74	-0.74
1.23	0.03	0.80	-0.33	0.90	0.03	0.53	-0.53
-1.93	-3.18	-2.25	-3.62	-2.35	-3.18	0.57	-0.57
-0.20	-0.20	-0.40	-0.40	-0.20	-0.20	0.	0.
Test # 2							
16.00	15.80	15.80	15.80	15.80	15.50	0.08	-0.08
18.05	16.52	17.92	16.42	17.40	16.35	0.68	-0.68
17.40	16.23	17.13	15.93	17.30	15.80	0.64	-0.64
19.15	17.65	18.75	17.65	18.60	17.45	0.63	-0.63
17.90	16.87	17.37	16.47	17.80	16.60	0.52	-0.52
15.35	14.28	14.98	13.98	15.40	14.05	0.57	-0.57
15.80	15.80	15.80	15.80	15.50	15.50	0.	0.
Test # 3							
12.00	11.80	11.80	11.60	11.60	11.80	0.03	-0.03
12.98	11.45	12.87	11.33	12.87	11.40	0.76	-0.76
14.77	13.50	14.73	13.37	14.43	13.50	0.59	-0.59
14.05	12.85	14.00	12.50	14.10	12.90	0.65	-0.65
12.23	11.00	12.07	11.03	12.27	11.70	0.47	-0.47
11.52	10.35	11.23	10.27	11.33	10.30	0.53	-0.53
11.80	11.80	11.60	11.60	11.80	11.80	0.	0.
Test # 4							
10.50	10.50	10.50	10.50	10.50	10.40	0.02	-0.02
11.68	10.18	11.57	9.77	12.67	9.75	1.04	-1.04

13.77	12.77	13.93	12.63	13.83	12.40	0.62	-0.62
12.45	11.15	12.80	11.40	12.60	10.95	0.73	-0.73
11.23	10.23	11.57	10.57	11.67	10.30	0.56	-0.56
8.32	7.52	8.23	7.53	8.43	7.15	0.46	-0.46
10.50	10.50	10.50	10.50	10.40	10.40	-0.00	-0.00
Test # 5							
12.90	12.60	12.60	12.50	12.50	12.80	0.02	-0.02
15.67	13.82	15.07	13.65	15.35	14.10	0.75	-0.75
15.03	13.73	14.83	13.80	15.00	14.10	0.54	-0.54
14.70	13.45	15.00	13.35	14.45	13.40	0.66	-0.66
15.57	13.87	15.17	13.80	15.30	14.10	0.71	-0.71
13.53	12.38	13.13	11.65	13.15	12.20	0.60	-0.60
12.60	12.60	12.50	12.50	12.80	12.80	0.	0.
Test # 6							
15.50	15.70	15.70	15.80	15.80	15.60	-0.02	0.02
18.83	16.67	18.07	16.78	18.05	16.32	0.86	-0.86
17.37	16.63	17.63	16.77	17.70	16.93	0.39	-0.39
18.50	18.00	18.70	18.05	18.65	17.65	0.36	-0.36
17.83	17.07	18.17	17.23	17.70	16.87	0.42	-0.42
16.47	16.13	16.63	16.12	16.75	15.78	0.30	-0.30
15.70	15.70	15.80	15.80	15.60	15.60	0.00	0.00
Test # 7							
16.60	15.60	15.60	15.70	15.70	16.20	0.07	-0.07
19.20	17.13	18.65	17.67	18.85	17.53	0.73	-0.73
18.70	17.07	18.20	17.23	18.10	17.37	0.56	-0.56
19.10	17.60	18.45	17.60	18.35	17.80	0.48	-0.48
18.70	17.03	18.20	17.37	18.10	17.53	0.51	-0.51
17.60	15.77	16.75	15.93	16.85	16.17	0.56	-0.56
15.60	15.60	15.70	15.70	16.20	16.20	0.	0.
Test # 8							
17.30	18.10	18.10	16.60	16.60	17.80	-0.08	0.08
20.02	18.75	20.65	19.00	20.48	18.58	0.80	-0.80
19.93	19.10	20.20	18.60	19.67	18.67	0.57	-0.57
20.25	19.55	20.55	18.70	19.55	19.15	0.49	-0.49
19.87	19.30	20.10	18.10	19.13	18.83	0.48	-0.48
18.48	18.15	19.15	17.00	17.82	17.82	0.41	-0.41
18.10	18.10	16.60	16.60	17.80	17.80	-0.00	-0.00
Test # 9							
18.90	19.20	19.20	18.90	18.90	19.20	-0.05	0.05
20.77	20.02	21.33	19.78	20.90	20.15	0.51	-0.51
20.43	19.83	20.57	19.67	20.50	19.50	0.42	-0.42
21.60	21.05	21.60	21.35	21.70	21.35	0.19	-0.19
20.67	20.17	21.03	20.23	21.00	20.50	0.30	-0.30
18.13	17.98	18.57	17.92	18.70	18.25	0.21	-0.21
19.20	19.20	18.90	18.90	19.20	19.20	0.	0.
Test # 10							
19.40	19.40	19.40	19.10	19.10	19.30	0.02	-0.02
21.98	20.68	22.57	20.62	22.05	20.58	0.79	-0.79
20.67	19.67	20.83	19.43	20.70	19.57	0.59	-0.59
21.95	20.95	21.90	20.65	21.75	20.95	0.51	-0.51
21.53	20.63	21.57	20.37	21.40	20.63	0.48	-0.48
18.72	17.72	18.93	17.28	18.95	17.82	0.63	-0.63
19.40	19.40	19.10	19.10	19.30	19.30	0.	0.

Regression Equation

T17*22.52 - T1*73.87 - 3.13*T8 - 0.65e - 7*X*X + 1033.87

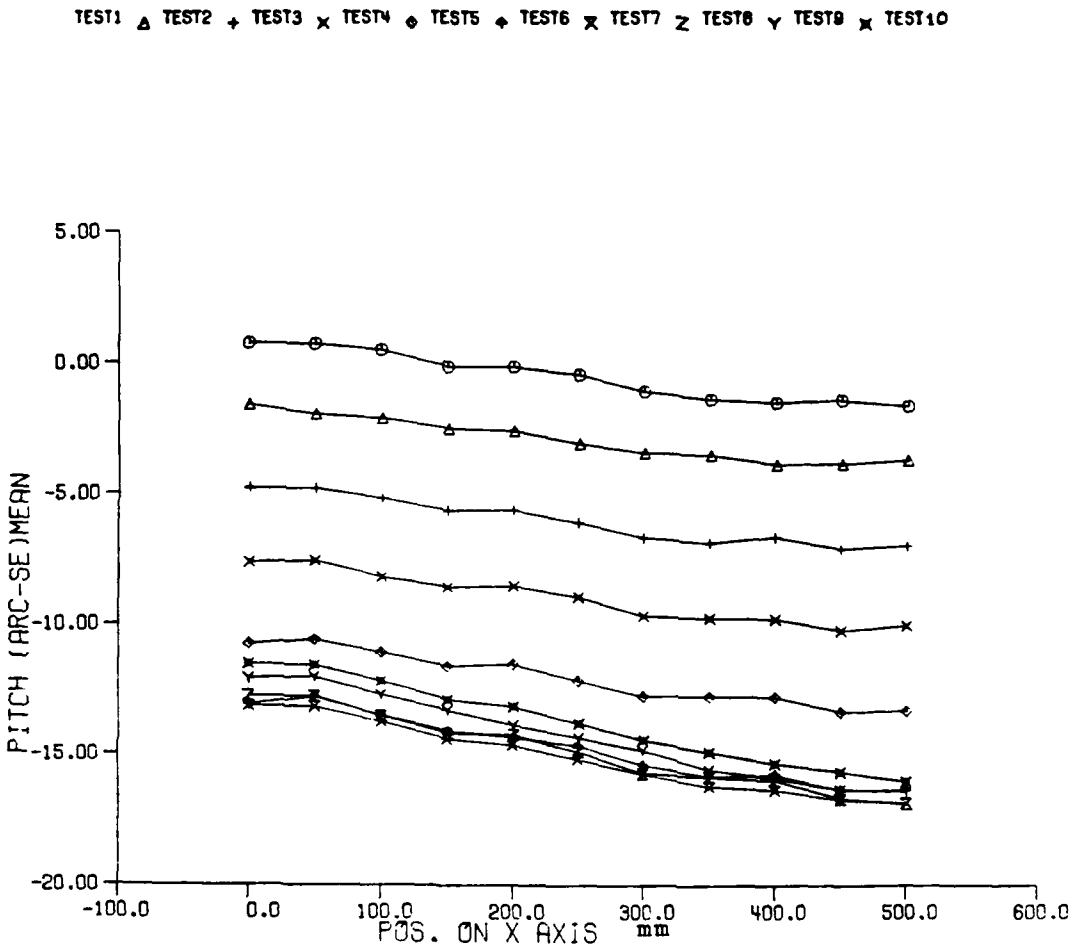
TEST1 TEST2 TEST3 TEST4 TEST5 TEST6 TEST7 TEST8 TEST9 TEST10
5.00
0.00
-5.00
-10.00
-15.00
-20.00
PITCH (ARC-SE)MEAN
-100.0
0.0
100.0
200.0
300.0
400.0
500.0
600.0
POS. ON X AXIS
mm

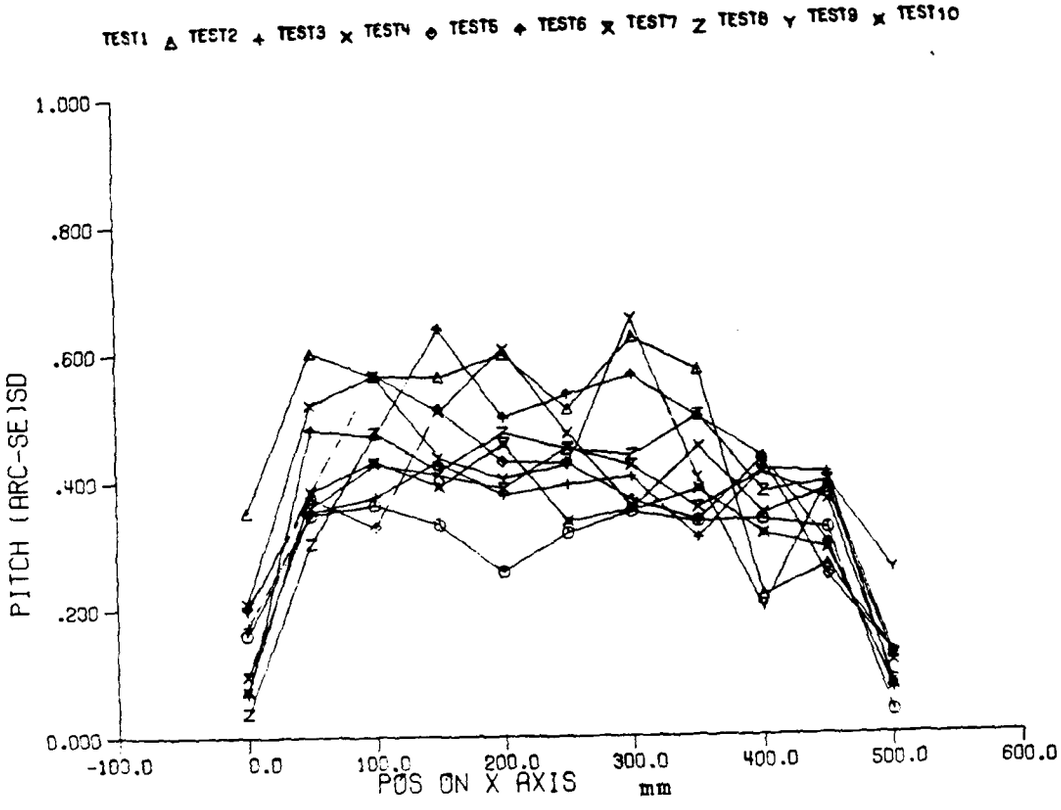
TEST1 △ TEST2 + TEST3 × TEST4 ⊕ TEST5 ✦ TEST6 ⧗ TEST7 Z TEST8 Y TEST9 ✱ TEST10
1.000
.800
.600
.400
.200
0.000
PITCH (ARC-SEISD
-100.0
0.0
100.0
200.0
300.0
400.0
500.0
600.0
POS ON X AXIS
mm

X axis

RESULTS OF PITCH ERROR (arc-secs)

X axis at 20.000 mms
Y axis at 111.999 mms
Z axis at 660.400 mms (indep)
Dir of laser F

Test # 1

POS	0.	50.	100.	150.	200.	250.
POS	300.	350.	400.	450.	500.	
TEMP	25.25	25.69	34.68	25.34	25.10	25.81
TEMP	24.73	25.69	24.83	24.75	24.98	24.66
TEMP	26.45	24.61	24.24	24.46	39.50	25.22
MEAN	0.76	0.74	0.51	-0.10	-0.12	-0.40
MEAN	-1.04	-1.32	-1.45	-1.34	-1.57	
SD	0.16	0.35	0.36	0.33	0.26	0.32
SD	0.35	0.33	0.34	0.32	0.04	

Test # 2

POS	0.	50.	100.	150.	200.	250.
POS	300.	350.	400.	450.	500.	
TEMP	26.00	27.21	35.60	26.11	26.06	26.62
TEMP	25.20	26.18	25.08	25.01	25.55	25.01
TEMP	27.16	25.15	24.66	24.98	40.87	25.67
MEAN	-1.59	-1.94	-2.10	-2.47	-2.57	-3.04
MEAN	-3.39	-3.46	-3.83	-3.79	-3.66	
SD	0.35	0.60	0.57	0.56	0.60	0.51
SD	0.62	0.57	0.22	0.27	0.13	

Test # 3

POS	0.	50.	100.	150.	200.	250.
POS	300.	350.	400.	450.	500.	
TEMP	26.93	29.02	36.32	27.16	27.34	27.34
TEMP	25.79	26.85	25.52	25.45	26.19	25.50
TEMP	27.80	25.77	25.13	25.57	41.65	26.31
MEAN	-4.78	-4.78	-5.16	-5.60	-5.60	-6.06
MEAN	-6.63	-6.82	-6.61	-7.04	-6.93	
SD	0.17	0.35	0.38	0.43	0.38	0.39
SD	0.41	0.31	0.42	0.41	0.07	

Test # 4

POS	0.	50.	100.	150.	200.	250.
POS	300.	350.	400.	450.	500.	
TEMP	27.38	32.35	37.07	28.49	29.19	28.24
TEMP	26.65	27.83	26.31	26.19	27.07	26.24
TEMP	28.46	26.53	25.70	26.26	42.39	27.22
MEAN	-7.64	-7.56	-8.17	-8.54	-8.51	-8.91
MEAN	-9.63	-9.70	-9.74	-10.17	-9.99	
SD	0.21	0.52	0.57	0.51	0.61	0.47
SD	0.36	0.45	0.35	0.38	0.11	

Test # 5

POS	0.	50.	100.	150.	200.	250.
POS	300.	350.	400.	450.	500.	
TEMP	27.00	30.29	37.55	27.66	28.56	28.85
TEMP	27.29	28.32	26.88	26.73	27.76	26.71
TEMP	28.90	27.00	26.14	26.85	42.80	27.88
MEAN	-10.75	-10.57	-11.06	-11.57	-11.51	-12.12
MEAN	-12.72	-12.71	-12.74	-13.30	-13.27	

SD	0.20	0.37	0.33	0.51	0.43	0.43
SD	0.37	0.34	0.43	0.25	0.13	

Test # 6

POS	0.	50.	100.	150.	200.	250.
POS	300.	350.	400.	450.	500.	
TEMP	26.75	33.66	37.58	30.13	30.66	29.52
TEMP	28.01	29.32	27.79	27.71	28.66	27.59
TEMP	29.20	27.49	26.49	27.30	42.87	28.93
MEAN	-13.08	-12.78	-13.48	-14.08	-14.32	-14.63
MEAN	-15.38	-15.81	-15.75	-16.33	-16.34	
SD	0.07	0.48	0.47	0.64	0.50	0.54
SD	0.56	0.50	0.44	0.30	0.07	

Test # 7

POS	0.	50.	100.	150.	200.	250.
POS	300.	350.	400.	450.	500.	
TEMP	26.55	33.58	37.65	30.12	31.02	29.68
TEMP	28.19	29.41	28.00	27.90	28.78	27.73
TEMP	29.27	27.66	26.61	27.44	42.77	29.10
MEAN	-13.14	-13.16	-13.73	-14.38	-14.63	-15.16
MEAN	-15.73	-16.19	-16.33	-16.70	-16.82	
SD	0.10	0.36	0.43	0.41	0.39	0.45
SD	0.42	0.36	0.41	0.37	0.08	

Test # 8

POS	0.	50.	100.	150.	200.	250.
POS	300.	350.	400.	450.	500.	
TEMP	26.40	33.88	37.66	30.64	31.27	29.86
TEMP	28.32	29.64	28.23	28.13	28.93	27.91
TEMP	29.32	27.79	26.69	27.57	42.66	29.32
MEAN	-12.76	-12.76	-13.50	-14.16	-14.23	-14.86
MEAN	-15.70	-15.82	-15.96	-16.65	-16.86	
SD	0.04	0.30	0.48	0.42	0.48	0.45
SD	0.44	0.50	0.38	0.40	0.12	

Test # 9

POS	0.	50.	100.	150.	200.	250.
POS	300.	350.	400.	450.	500.	
TEMP	26.30	34.13	37.09	30.52	31.27	30.04
TEMP	28.50	29.91	28.43	28.40	29.18	28.09
TEMP	29.23	27.77	26.69	27.55	42.50	29.60
MEAN	-12.08	-12.01	-12.68	-13.27	-13.66	-14.32
MEAN	-14.81	-15.54	-15.87	-16.31	-16.39	
SD	0.20	0.39	0.56	0.44	0.40	0.42
SD	0.65	0.40	0.20	0.40	0.26	

Test # 10

POS	0.	50.	100.	150.	200.	250.
POS	300.	350.	400.	450.	500.	
TEMP	26.20	32.37	36.76	29.46	30.28	29.94
TEMP	28.48	29.85	28.41	28.36	29.09	28.07
TEMP	29.09	27.65	26.67	27.51	42.17	29.63
MEAN	-11.52	-11.56	-12.16	-12.86	-13.14	-13.77
MEAN	-14.41	-14.86	-15.31	-15.62	-16.00	
SD	0.07	0.38	0.43	0.39	0.46	0.34
SD	0.35	0.39	0.32	0.29	0.07	

ACTUAL DATA

						SPREAD Up	SPREAD Down
Test # 1							
0.47	0.79	0.79	0.91	0.91	0.71	-0.04	0.04
0.51	0.51	0.98	0.63	1.34	0.47	0.20	-0.20
0.51	0.04	0.87	0.24	0.98	0.39	0.28	-0.28
-0.04	-0.55	0.08	-0.16	0.39	-0.35	0.25	-0.25
-0.24	-0.24	0.12	-0.31	0.28	-0.35	0.18	-0.18
-0.43	-0.75	-0.12	-0.55	0.08	-0.63	0.24	-0.24
-1.06	-1.42	-0.39	-1.18	-0.98	-1.22	0.23	-0.23
-0.91	-1.65	-1.06	-1.42	-1.14	-1.73	0.28	-0.28
-1.54	-1.93	-1.10	-1.38	-1.06	-1.69	0.22	-0.22
-1.38	-1.77	-0.94	-1.30	-1.02	-1.61	0.22	-0.22
-1.61	-1.61	-1.57	-1.57	-1.54	-1.54	0.	0.
Test # 2							
-0.98	-1.65	-1.65	-1.57	-1.57	-2.09	0.18	-0.18
-1.06	-2.09	-1.65	-2.17	-1.81	-2.87	0.43	-0.43
-1.34	-2.32	-1.77	-2.44	-1.81	-2.91	0.46	-0.46
-1.65	-2.52	-2.09	-2.83	-2.44	-3.27	0.41	-0.41
-1.85	-2.80	-2.01	-2.95	-2.40	-3.43	0.49	-0.49
-2.20	-3.15	-2.99	-3.23	-2.91	-3.78	0.34	-0.34
-2.40	-3.46	-3.11	-3.66	-3.39	-4.29	0.42	-0.42
-2.60	-3.66	-2.99	-3.70	-3.58	-4.21	0.40	-0.40
-3.46	-3.78	-3.78	-4.06	-3.82	-4.06	0.14	-0.14
-3.43	-4.06	-3.54	-4.02	-3.74	-3.98	0.22	-0.22
-3.62	-3.62	-3.54	-3.54	-3.82	-3.82	0.	0.
Test # 3							
-4.49	-4.84	-4.84	-4.92	-4.92	-4.65	0.03	-0.03
-4.41	-4.65	-4.57	-5.16	-4.61	-5.28	0.25	-0.25
-4.76	-5.47	-4.84	-5.47	-4.84	-5.55	0.34	-0.34
-5.28	-5.94	-5.04	-5.98	-5.35	-6.02	0.38	-0.38
-5.24	-5.91	-5.12	-5.91	-5.47	-5.98	0.33	-0.33
-5.71	-6.34	-5.79	-6.42	-5.63	-6.50	0.35	-0.35
-6.38	-6.81	-6.18	-7.01	-6.26	-7.13	0.35	-0.35
-6.50	-7.13	-6.50	-6.93	-6.69	-7.20	0.26	-0.26
-6.46	-7.05	-6.38	-6.73	-5.98	-7.05	0.33	-0.33
-6.42	-7.28	-6.69	-7.48	-7.05	-7.32	0.32	-0.32
-6.85	-6.85	-6.93	-6.93	-7.01	-7.01	0.	0.
Test # 4							
-7.56	-7.44	-7.44	-7.72	-7.72	-7.99	0.07	-0.07
-6.81	-8.03	-7.20	-7.91	-7.32	-8.07	0.45	-0.45
-7.60	-8.46	-7.72	-8.74	-7.68	-8.82	0.51	-0.51
-7.95	-8.98	-8.11	-8.82	-8.23	-9.17	0.45	-0.45
-8.07	-9.06	-7.68	-9.06	-8.19	-9.02	0.53	-0.53
-8.50	-9.33	-8.31	-9.37	-8.66	-9.29	0.42	-0.42
-9.25	-9.76	-9.25	-10.04	-9.45	-10.00	0.31	-0.31
-9.17	-9.72	-9.49	-10.16	-9.37	-10.31	0.36	-0.36
-9.37	-10.04	-9.41	-10.08	-9.49	-10.04	0.31	-0.31
-9.84	-10.39	-9.84	-10.79	-9.88	-10.28	0.31	-0.31
-10.04	-10.04	-9.84	-9.84	-10.08	-10.08	-0.00	-0.00
Test # 5							
-10.35	-10.75	-10.75	-10.87	-10.87	-10.91	0.09	-0.09

-10.16	-10.67	-10.28	-10.75	-10.39	-11.18	0.30	-0.30
-10.51	-11.18	-10.94	-11.42	-10.98	-11.34	0.25	-0.25
-10.83	-11.54	-11.38	-12.01	-11.42	-12.28	0.37	-0.37
-11.02	-11.73	-11.14	-11.97	-11.22	-11.97	0.38	-0.38
-11.57	-12.17	-11.93	-12.76	-11.85	-12.44	0.33	-0.33
-12.24	-12.80	-12.44	-12.87	-12.64	-13.31	0.28	-0.28
-12.20	-12.64	-12.60	-13.11	-12.64	-13.07	0.23	-0.23
-12.13	-12.99	-12.56	-13.19	-12.44	-13.15	0.37	-0.37
-13.03	-13.31	-12.99	-13.54	-13.35	-13.58	0.18	-0.18
-13.23	-13.23	-13.43	-13.43	-13.15	-13.15	0.	0.

Test # 6

-12.95	-13.11	-13.11	-13.07	-13.07	-13.15	0.03	-0.03
-12.24	-13.19	-12.32	-13.23	-12.48	-13.23	0.43	-0.43
-13.07	-13.94	-13.11	-13.82	-12.99	-13.98	0.43	-0.43
-13.50	-14.65	-13.58	-14.57	-13.43	-14.76	0.58	-0.58
-13.82	-14.72	-13.86	-14.76	-13.94	-14.84	0.45	-0.45
-14.21	-15.12	-14.06	-15.08	-14.17	-15.16	0.49	-0.49
-15.00	-15.83	-14.65	-15.83	-15.00	-15.98	0.50	-0.50
-15.47	-16.22	-15.20	-16.30	-15.43	-16.26	0.45	-0.45
-15.55	-16.06	-15.08	-16.22	-15.55	-16.06	0.36	-0.36
-16.02	-16.46	-16.06	-16.61	-16.10	-16.69	0.26	-0.26
-16.42	-16.42	-16.26	-16.26	-16.34	-16.34	0.	0.

Test # 7

-13.11	-13.19	-13.19	-13.19	-13.19	-12.95	-0.03	0.03
-12.76	-13.66	-12.99	-13.23	-12.83	-13.46	0.30	-0.30
-13.39	-14.25	-13.35	-13.98	-13.31	-14.09	0.38	-0.38
-13.86	-14.84	-14.13	-14.65	-14.06	-14.72	0.36	-0.36
-14.37	-15.08	-14.37	-14.96	-14.13	-14.88	0.34	-0.34
-14.80	-15.67	-14.76	-15.55	-14.69	-15.47	0.41	-0.41
-15.31	-16.26	-15.47	-16.02	-15.28	-16.02	0.37	-0.37
-15.94	-16.46	-15.94	-16.46	-15.75	-16.61	0.31	-0.31
-16.14	-16.77	-16.02	-16.65	-15.75	-16.61	0.35	-0.35
-16.46	-17.13	-16.30	-16.85	-16.38	-17.09	0.32	-0.32
-16.93	-16.93	-16.77	-16.77	-16.77	-16.77	0.	0.

Test # 8

-12.83	-12.76	-12.76	-12.76	-12.76	-12.72	-0.02	0.02
-12.48	-12.99	-12.36	-13.15	-12.68	-12.87	0.25	-0.25
-12.95	-14.02	-13.11	-13.94	-13.15	-13.82	0.43	-0.43
-13.90	-14.45	-13.78	-14.69	-13.70	-14.45	0.37	-0.37
-13.74	-14.80	-13.86	-14.57	-13.82	-14.61	0.43	-0.43
-14.57	-15.16	-14.45	-15.24	-14.37	-15.39	0.40	-0.40
-15.35	-16.18	-15.20	-15.98	-15.35	-16.10	0.39	-0.39
-15.24	-16.26	-15.63	-16.22	-15.28	-16.30	0.44	-0.44
-15.51	-16.30	-15.63	-16.18	-15.75	-16.42	0.33	-0.33
-16.50	-17.01	-16.06	-16.89	-16.38	-17.05	0.33	-0.33
-16.85	-16.85	-16.73	-16.73	-17.01	-17.01	-0.00	-0.00

Test # 9

-12.20	-12.20	-12.20	-12.09	-12.09	-11.69	-0.09	0.09
-11.69	-12.52	-11.81	-12.44	-11.61	-12.01	0.31	-0.31
-12.44	-13.50	-12.32	-13.27	-12.13	-12.40	0.38	-0.38
-12.95	-13.70	-12.91	-13.94	-13.03	-13.07	0.30	-0.30
-13.46	-14.29	-13.31	-14.25	-13.98	-13.86	0.28	-0.28
-14.02	-14.92	-13.86	-14.72	-14.33	-14.06	0.25	-0.25
-14.84	-15.51	-14.49	-15.43	-13.74	-14.84	0.45	-0.45
-15.16	-16.02	-15.08	-15.98	-15.39	-15.59	0.33	-0.33
-15.83	-16.06	-15.59	-16.14	-15.79	-15.93	0.14	-0.14

-16.02	-16.89	-15.91	-16.61	-16.42	-15.98	0.19	-0.19
-16.50	-16.50	-16.06	-16.06	-16.61	-16.61	0.	0

Test # 10

-11.54	-11.57	-11.57	-11.54	-11.54	-11.38	-0.03	0.03
-11.10	-12.01	-11.26	-11.89	-11.30	-11.81	0.34	-0.34
-11.89	-12.72	-11.81	-12.52	-11.65	-12.36	0.37	-0.37
-12.68	-13.31	-12.40	-13.31	-12.52	-12.95	0.33	-0.33
-12.80	-13.66	-12.60	-13.54	-12.80	-13.43	0.41	-0.41
-13.50	-14.17	-13.46	-14.02	-13.43	-14.02	0.30	-0.30
-14.13	-14.80	-14.13	-14.76	-14.02	-14.61	0.31	-0.31
-14.57	-15.28	-14.45	-15.28	-14.53	-15.04	0.34	-0.34
-15.00	-15.67	-15.16	-15.47	-14.96	-15.63	0.28	-0.28
-15.59	-15.94	-15.43	-15.87	-15.16	-15.71	0.22	-0.22
-15.91	-15.91	-16.06	-16.06	-16.02	-16.02	-0.00	-0.00

Regression Equation

$$-3.37*T14 - 0.23e-3*T2*X - 1.62*T3 + 0.82*T1 + 119.56$$

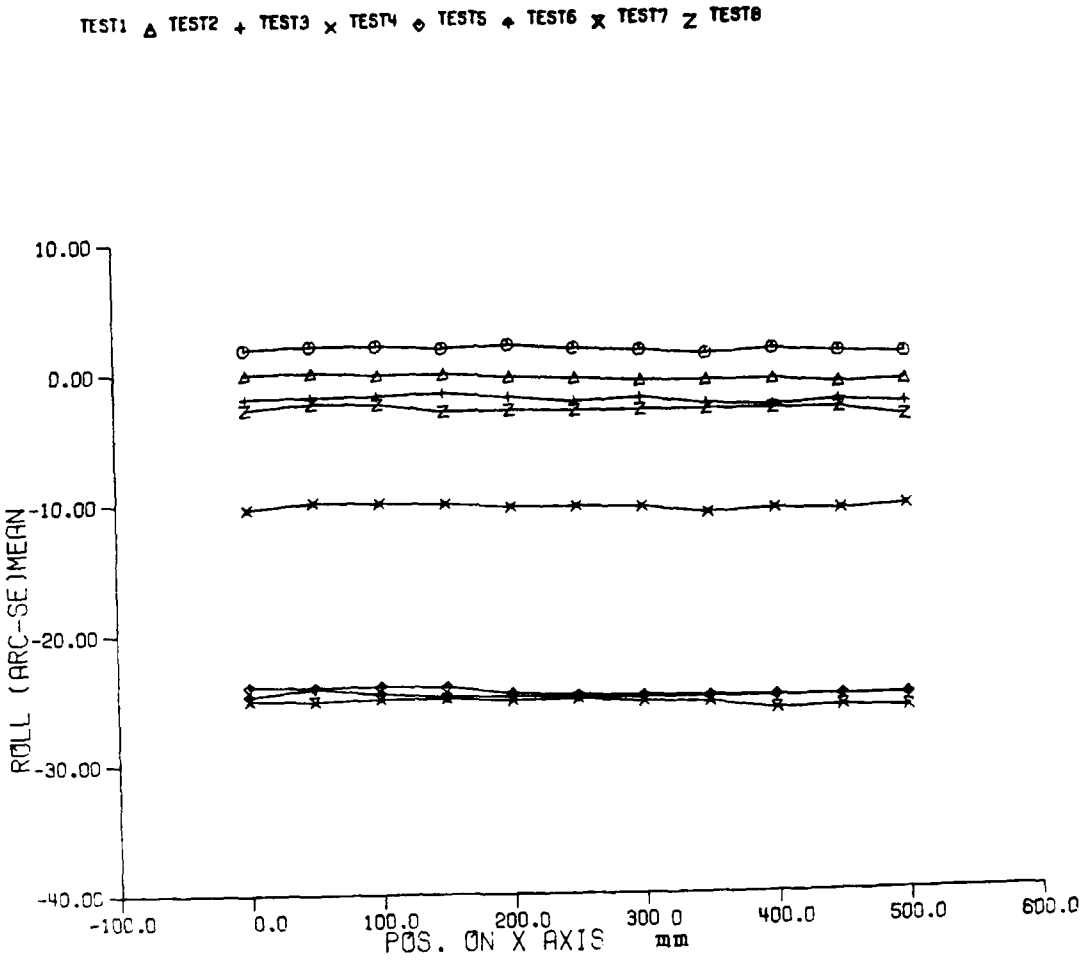
TEST1 △ TEST2 + TEST3 × TEST4 ◇ TEST5 ✦ TEST6 ✕ TEST7 Z TEST8
10.00
0.00
-10.00
-20.00
-30.00
-40.00
ROLL (ARC-SEC)MEAN
-100.0
0.0
100.0
200.0
300.0
400.0
500.0
600.0
POS. ON X AXIS mm

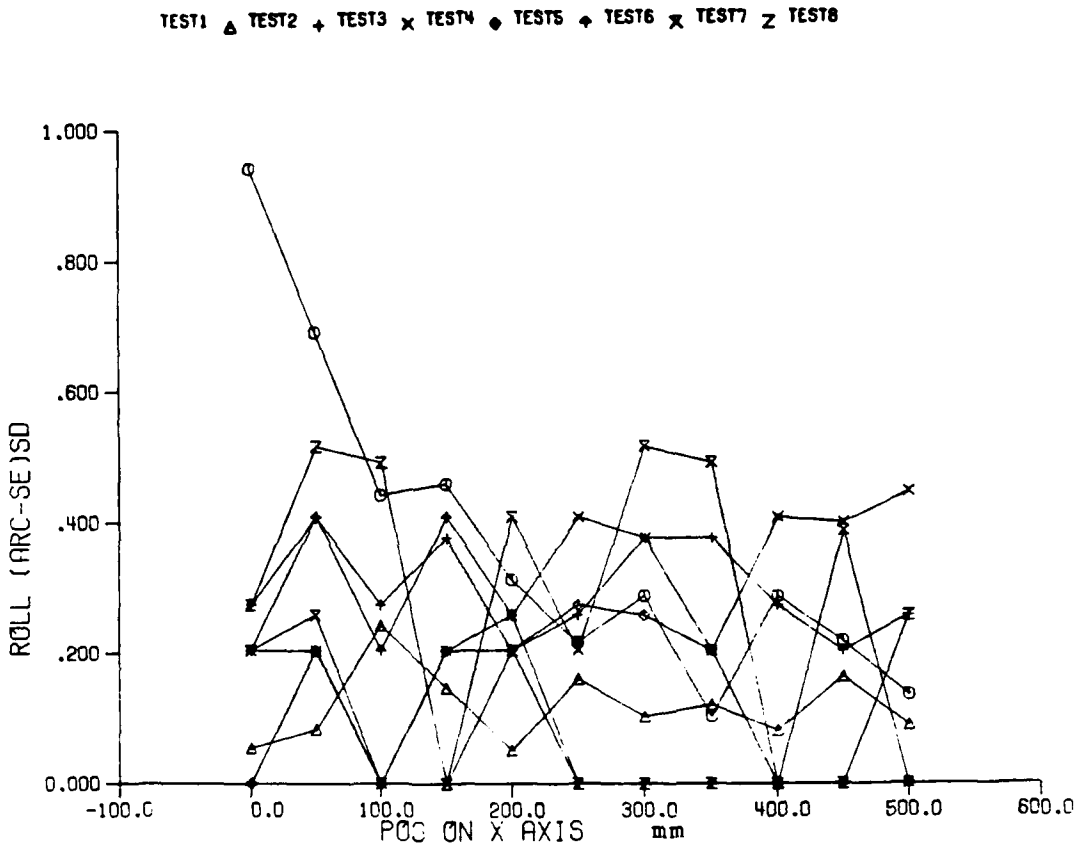
TEST1 TEST2 TEST3 TEST4 TEST5 TEST6 TEST7 TEST8
1.000
.800
.600
.400
.200
0.000
ROLL (ARC-SEJSD
-100.0
0.0
100.0
200.0
300.0
400.0
500.0
600.0
POS ON X AXIS mm

X AXIS
RESULTS OF ROLL ERROR (arc-sec)

X axis at 30.000 mms
Y axis at 140.000 mms
Z axis at 349.999 mms
Ref is + ve on right

Test # 1

POS	0.	50.	100.	150.	200.	250.
POS	300.	350.	400.	450.	500.	
TEMP	25.45	25.92	35.15	~~26.39~~	~~28.90~~	26.83
TEMP	25.63	26.75	25.95	25.92	26.07	25.77
TEMP	27.17	25.41	25.06	25.28	40.28	26.31
MEAN	1.87	2.08	2.07	1.83	2.08	1.73
MEAN	1.57	1.23	1.53	1.30	1.17	
SD	0.94	0.69	0.44	0.46	0.31	0.22
SD	0.29	0.10	0.29	0.22	0.14	

Test # 2

POS	0.	50.	100.	150.	200.	250.
POS	300.	350.	400.	450.	500.	
TEMP	26.15	27.33	36.24	27.03	26.81	27.79
TEMP	26.32	27.64	26.42	26.32	26.94	26.20
TEMP	27.96	26.08	25.49	26.03	41.60	27.21
MEAN	-0.05	0.05	-0.15	-0.12	-0.37	-0.52
MEAN	-0.73	-0.77	-0.73	-1.05	-0.90	
SD	0.05	0.08	0.24	0.15	0.05	0.16
SD	0.10	0.12	0.08	0.16	0.09	

Test # 3

POS	0.	50.	100.	150.	200.	250.
POS	300.	350.	400.	450.	500.	
TEMP	26.48	28.25	36.70	27.81	27.52	28.25
TEMP	26.74	28.01	26.74	26.66	27.45	26.54
TEMP	28.33	26.42	25.76	26.40	42.05	27.69
MEAN	-1.92	-1.83	-1.75	-1.58	-1.92	-2.33
MEAN	-2.08	-2.58	-2.75	-2.42	-2.67	
SD	0.20	0.41	0.27	0.38	0.20	0.26
SD	0.38	0.38	0.27	0.20	0.26	

Test # 4

POS	0.	50.	100.	150.	200.	250.
POS	300.	350.	400.	450.	500.	
TEMP	26.60	29.24	36.92	~~28.48~~	~~28.81~~	28.58
TEMP	27.02	28.36	27.02	26.92	27.78	26.82
TEMP	28.53	26.67	25.92	26.63	42.29	28.04
MEAN	-10.42	-9.92	-10.00	-10.08	-10.33	-10.33
MEAN	-10.42	-10.92	-10.67	-10.76	-10.50	
SD	0.20	0.20	0.	0.20	0.26	0.41
SD	0.38	0.20	0.41	0.40	0.45	

Test # 5

POS	0.	50.	100.	150.	200.	250.
POS	300.	350.	400.	350.	500.	
TEMP	26.75	31.08	37.35	29.33	29.37	28.96
TEMP	27.35	28.72	27.33	27.28	28.11	27.13
TEMP	28.77	26.94	26.13	26.86	42.43	28.40
MEAN	-24.00	-24.08	-24.00	-24.08	-24.58	-24.75
MEAN	-24.83	-24.92	-25.00	-25.00	-25.00	

SD	0.	0.20	0.	0.20	0.20	0.27
SD	0.26	0.20	0.	0.	0.	

Test # 6

POS	0.	50.	100.	150.	200.	250.
POS	300.	350.	400.	450.	500.	
TEMP	26.43	32.66	37.21	29.80	30.16	29.26
TEMP	27.70	29.02	27.65	27.53	28.16	27.14
TEMP	28.70	27.01	25.40	26.43	42.48	28.65
MEAN	-24.75	-24.17	-24.58	-24.83	-24.83	-25.00
MEAN	-25.00	-25.00	-25.00	-25.00	-25.00	
SD	0.27	0.41	0.20	0.41	0.26	0.
SD	0.	0.	0.	0.	0.	

Test # 7

POS	0.	50.	100.	150.	200.	250.
POS	300.	350.	400.	450.	500.	
TEMP	26.55	30.89	37.24	28.66	29.14	29.36
TEMP	27.83	29.24	27.73	27.53	28.27	27.12
TEMP	28.83	27.12	25.60	26.53	42.39	28.80
MEAN	-25.08	-25.17	-25.00	-25.00	-25.17	-25.08
MEAN	-25.33	-25.42	-26.00	-25.84	-26.00	
SD	0.20	0.26	0.	0.	0.41	0.20
SD	0.52	0.49	0.	0.39	0.	

Test # 8

POS	0.	50.	100.	150.	200.	250.
POS	300.	350.	400.	450.	500.	
TEMP	26.28	34.03	37.18	30.57	31.15	29.72
TEMP	28.23	29.65	28.23	28.06	28.67	27.65
TEMP	29.04	27.55	26.11	26.96	42.15	29.31
MEAN	-2.75	-2.33	-2.42	-3.00	-2.92	-3.00
MEAN	-3.00	-3.00	-3.00	-3.00	-3.67	
SD	0.27	0.52	0.49	0.	0.20	0.
SD	0.	0.	0.	0.	0.26	

ACTUAL DATA

						SPREAD Up	SPREAD Down
Test # 1							
0.	2.00	2.00	2.30	2.30	2.60	-0.43	0.43
0.70	2.20	2.30	2.30	2.60	2.40	-0.22	0.22
1.20	2.00	2.30	2.30	2.30	2.30	-0.13	0.13
1.10	1.80	1.50	2.20	2.20	2.20	-0.23	0.23
1.50	2.10	2.00	2.30	2.30	2.30	-0.15	0.15
1.30	1.80	1.80	1.90	1.80	1.80	-0.10	0.10
1.10	1.80	1.40	1.80	1.80	1.50	-0.13	0.13
1.10	1.20	1.40	1.20	1.30	1.20	0.03	-0.03
1.40	1.10	1.80	1.50	1.90	1.50	0.17	-0.17
1.40	0.90	1.50	1.20	1.40	1.40	0.13	-0.13
1.00	1.00	1.20	1.20	1.30	1.30	-0.00	-0.00
Test # 2							
0.	0.	0.	-0.10	-0.10	-0.10	0.02	-0.02
0.	0.20	0.	0.10	0.	0.	-0.05	0.05
-0.10	-0.20	0.30	-0.30	-0.40	-0.20	0.08	-0.08
-0.30	0.	-0.10	0.	-0.30	0	-0.12	0.12
-0.40	-0.30	-0.40	-0.30	-0.40	-0.40	-0.03	0.03

-0.50	-0.50	-0.80	-0.50	-0.30	-0.50	-0.02	0.02
-0.60	-0.70	-0.90	-0.80	-0.70	-0.70	0.	0.
-0.70	-0.90	-0.90	-0.80	-0.60	-0.70	0.03	-0.03
-0.70	-0.90	-0.70	-0.70	-0.70	-0.70	0.03	-0.03
-0.90	-1.20	-0.90	-1.20	-0.90	-1.20	0.15	-0.15
-1.00	-1.00	-0.90	-0.90	-0.80	-0.80	0.00	0.00
Test #	3						
-1.50	-2.00	-2.00	-2.00	-2.00	-2.00	0.08	-0.08
-1.50	-1.50	-1.50	-2.00	-2.00	-2.50	0.17	-0.17
-1.50	-2.00	-1.50	-2.00	-1.50	-2.00	0.25	-0.25
-1.50	-1.00	-1.50	-1.50	-2.00	-2.00	-0.08	0.08
-2.00	-1.50	-2.00	-2.00	-2.00	-2.00	-0.08	0.08
-2.00	-2.00	-2.50	-2.50	-2.50	-2.50	0.	0.
-2.00	-1.50	-2.00	-2.00	-2.50	-2.50	-0.08	0.08
-2.00	-2.50	-2.50	-3.00	-2.50	-3.00	0.25	-0.25
-2.50	-2.50	-2.50	-3.00	-3.00	-3.00	0.08	-0.08
-2.00	-2.50	-2.50	-2.50	-2.50	-2.50	0.08	-0.08
-2.50	-2.50	-2.50	-2.50	-3.00	-3.00	0.	0.
Test #	4						
-10.00	-10.50	-10.50	-10.50	-10.50	-10.50	0.08	-0.08
-9.50	-10.00	-10.00	-10.00	-10.00	-10.00	0.08	-0.08
-10.00	-10.00	-10.00	-10.00	-10.00	-10.00	0.	0.
-10.00	-10.00	-10.00	-10.00	-10.50	-10.00	-0.08	0.08
-10.00	-10.00	-10.50	-10.50	-10.50	-10.50	0.	0.
-10.00	-10.00	-10.00	-10.50	-10.50	-11.00	0.17	-0.17
-10.00	-10.00	-10.50	-10.50	-10.50	-11.00	0.08	-0.08
-11.00	-10.50	-11.00	-11.00	-11.00	-11.00	-0.08	0.08
-10.00	-10.50	-11.00	-10.50	-11.00	-11.00	0.	0.
-10.05	-11.00	-10.50	-11.00	-11.00	-11.00	0.24	-0.24
-10.00	-10.00	-10.50	-10.50	-11.00	-11.00	0.	0.
Test #	5						
-24.00	-24.00	-24.00	-24.00	-24.00	-24.00	0.	0.
-24.50	-24.00	-24.00	-24.00	-24.00	-24.00	-0.08	0.08
-24.00	-24.00	-24.00	-24.00	-24.00	-24.00	0.	0.
-24.00	-24.50	-24.00	-24.00	-24.00	-24.00	0.08	-0.08
-24.50	-24.50	-25.00	-24.50	-24.50	-24.50	-0.08	0.08
-25.00	-24.50	-24.50	-25.00	-25.00	-24.50	-0.08	0.08
-24.50	-25.00	-24.50	-25.00	-25.00	-25.00	0.17	-0.17
-24.50	-25.00	-25.00	-25.00	-25.00	-25.00	0.08	-0.08
-25.00	-25.00	-25.00	-25.00	-25.00	-25.00	0.	0.
-25.00	-25.00	-25.00	-25.00	-25.00	-25.00	0.	0.
-25.00	-25.00	-25.00	-25.00	-25.00	-25.00	0.	0.
Test #	6						
-25.00	-25.00	-25.00	-24.50	-24.50	-24.50	-0.08	0.08
-24.00	-24.00	-24.00	-24.00	-25.00	-24.00	-0.17	0.17
-24.50	-24.50	-24.50	-24.50	-25.00	-24.50	-0.08	0.08
-25.00	-25.00	-25.00	-24.00	-25.00	-25.00	-0.17	0.17
-25.00	-24.50	-25.00	-24.50	-25.00	-25.00	-0.17	0.17
-25.00	-25.00	-25.00	-25.00	-25.00	-25.00	0.	0.
-25.00	-25.00	-25.00	-25.00	-25.00	-25.00	0.	0.
-25.00	-25.00	-25.00	-25.00	-25.00	-25.00	0.	0.
-25.00	-25.00	-25.00	-25.00	-25.00	-25.00	0.	0.
-25.00	-25.00	-25.00	-25.00	-25.00	-25.00	0.	0.
-25.00	-25.00	-25.00	-25.00	-25.00	-25.00	0.	0.
Test #	7						
-25.50	-25.00	-25.00	-25.00	-25.00	-25.00	-0.08	0.08
-25.00	-25.00	-25.50	-25.00	-25.50	-25.00	-0.17	0.17
-25.00	-25.00	-25.00	-25.00	-25.00	-25.00	0.	0.
-25.00	-25.00	-25.00	-25.00	-25.00	-25.00	0.	0.
-26.00	-25.00	-25.00	-25.00	-25.00	-25.00	-0.17	0.17

-25.50	-25.00	-25.00	-25.00	-25.00	-25.00	-0.08	0.08
-26.00	-25.00	-25.00	-25.00	-26.00	-25.00	-0.33	0.33
-26.00	-26.00	-25.00	-25.00	-25.50	-25.00	-0.08	0.08
-26.00	-26.00	-26.00	-26.00	-26.00	-26.00	0.	0.
-26.00	-26.00	-25.05	-26.00	-26.00	-26.00	0.16	-0.16
-26.00	-26.00	-26.00	-26.00	-26.00	-26.00	0.	0.
Test #	8						
-2.50	-3.00	-3.00	-2.50	-2.50	-3.00	0.08	-0.08
-2.00	-2.00	-2.00	-3.00	-2.00	-3.00	0.33	-0.33
-2.50	-2.00	-2.00	-3.00	-2.00	-3.00	0.25	-0.25
-3.00	-3.00	-3.00	-3.00	-3.00	-3.00	0.	0.
-3.00	-2.50	-3.00	-3.00	-3.00	-3.00	-0.08	0.08
-3.00	-3.00	-3.00	-3.00	-3.00	-3.00	0.	0.
-3.00	-3.00	-3.00	-3.00	-3.00	-3.00	0.	0.
-3.00	-3.00	-3.00	-3.00	-3.00	-3.00	0.	0.
-3.00	-3.00	-3.00	-3.00	-3.00	-3.00	0.	0.
-3.00	-3.00	-3.00	-3.00	-3.00	-3.00	0.	0.
-4.00	-4.00	-3.50	-3.50	-3.50	-3.50	0.	0.

Regression Equation

-33.91*T9 + 21.74*T13 - 5.01*T15 - 0.63e-4*X*T5
+ 416.68

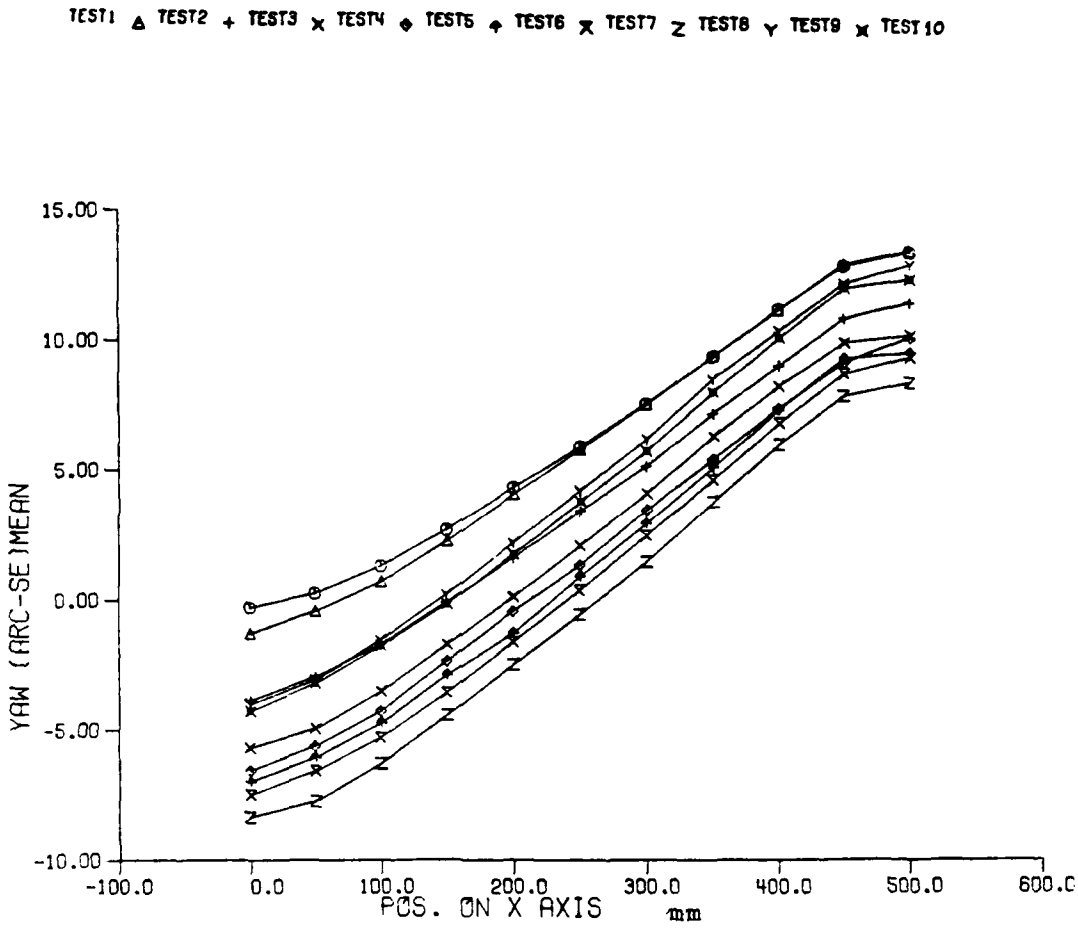
TEST1 TEST2 TEST3 TEST4 TEST5 TEST6 TEST7 TEST8 TEST9 TEST10
15.00
10.00
5.00
0.00
-5.00
-10.00
YAW (ARC-SE)MEAN
-100.0
0.0
100.0
200.0
300.0
400.0
500.0
600.0
POS. ON X AXIS mm

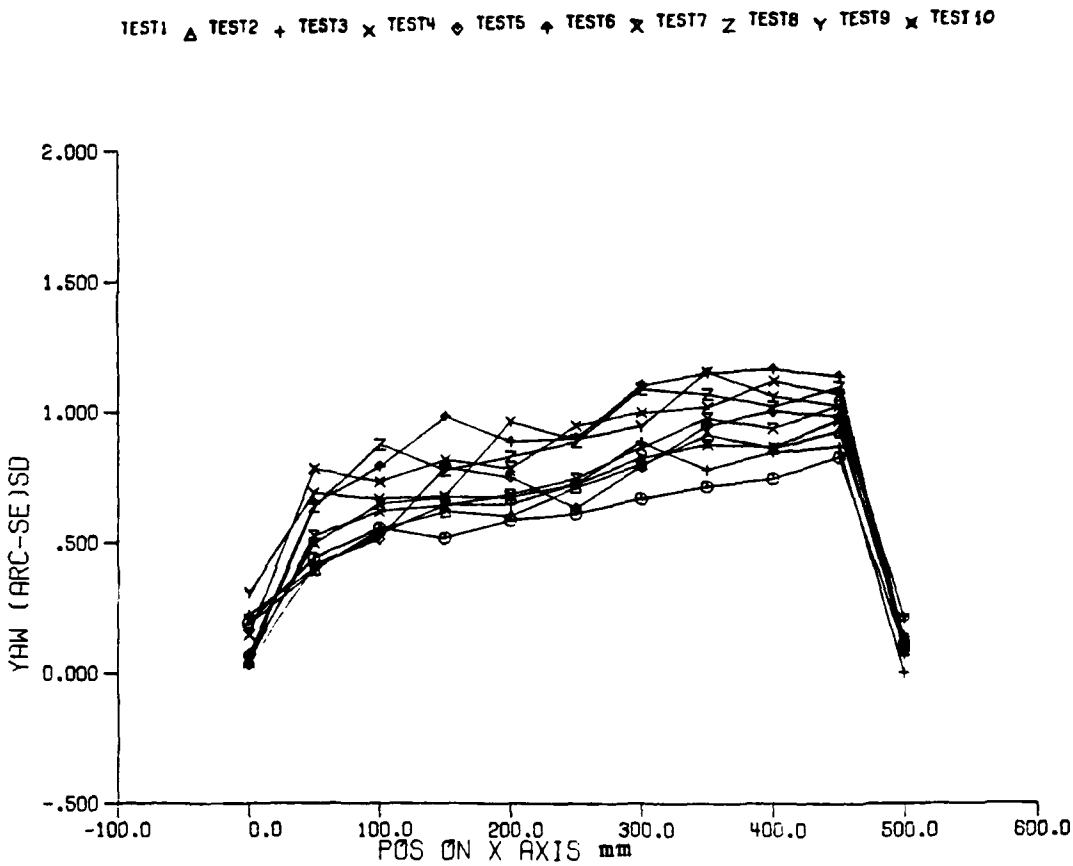
TEST1 TEST2 TEST3 TEST4 TEST5 TEST6 TEST7 TEST8 TEST9 TEST10
2.000
1.500
1.000
.500
0.000
-.500
YAW (ARC-SEJSD
-100.0
0.0
100.0
200.0
300.0
400.0
500.0
600.0
POS ON X AXIS mm

X AXIS

RESULTS OF YAW ERROR (arc-secs)

X axis at 40.000 mms
Y axis at 111.999 mms
Z axis at 660.400 mms (indep)
Dir of laser F

Test # 1

POS	0.	50.	100.	150.	200.	250.
POS	300.	350.	400.	450.	500.	
TEMP	24.58	24.88	34.39	24.56	24.56	24.92
TEMP	24.38	24.85	24.38	24.36	24.46	24.38
TEMP	25.88	24.39	24.26	24.29	37.66	24.53
MEAN	-0.28	0.26	1.31	2.70	4.30	5.86
MEAN	7.50	9.31	11.13	12.79	13.32	
SD	0.19	0.44	0.56	0.52	0.59	0.61
SD	0.67	0.72	0.75	0.83	0.10	

Test # 2

POS	0.	50.	100.	150.	200.	250.
POS	300.	350.	400.	450.	500.	
TEMP	24.95	25.95	34.87	~~25.39~~	~~25.46~~	25.76
TEMP	24.68	25.39	24.63	24.60	24.92	24.60
TEMP	26.54	24.75	24.41	24.58	39.93	25.02
MEAN	-1.27	-0.42	0.73	2.28	4.06	5.78
MEAN	7.49	9.34	11.12	12.88	13.37	
SD	0.19	0.40	0.55	0.62	0.60	0.71
SD	0.80	0.92	0.86	0.93	0.14	

Test # 3

POS	0.	50.	100.	150.	200.	250.
POS	300.	350.	400.	450.	500.	
TEMP	25.30	27.80	35.46	26.46	26.68	26.53
TEMP	25.11	26.11	25.01	24.96	25.48	24.96
TEMP	27.04	25.16	24.62	24.99	40.73	25.65
MEAN	-3.86	-2.97	-1.71	-0.09	1.62	3.39
MEAN	5.11	7.11	8.96	10.77	11.38	
SD	0.22	0.40	0.53	0.65	0.65	0.73
SD	0.89	0.78	0.85	0.87	0.00	

Test # 4

POS	0.	50.	100.	150.	200.	250.
POS	300.	350.	400.	450.	500.	
TEMP	26.02	31.83	36.41	~~28.06~~	~~29.09~~	27.67
TEMP	26.08	27.16	25.79	25.71	26.35	25.59
TEMP	27.72	25.94	24.63	25.37	41.86	26.65
MEAN	-5.66	-4.92	-3.50	-1.71	0.13	2.09
MEAN	4.07	6.25	8.19	9.85	10.14	
SD	0.15	0.79	0.74	0.82	0.79	0.95
SD	1.00	1.02	1.12	1.07	0.14	

Test # 5

POS	0.	50.	100.	150.	200.	250.
POS	300.	350.	400.	450.	500.	
TEMP	26.95	33.10	37.27	28.56	29.93	28.37
TEMP	26.78	27.83	26.37	26.24	27.17	26.24
TEMP	28.42	2[illegible].54	25.58	26.24	42.40	27.34
MEAN	-6.54	-5.61	-4.26	-2.36	-0.45	1.33
MEAN	3.42	5.37	7.32	9.08	10.04	

SD	0.04	0.42	0.52	0.79	0.75	0.63
SD	0.79	0.95	1.01	0.99	0.21	

Test # 6

POS	0.	50.	100.	150.	200.	250.
POS	300.	350.	400.	450.	500.	
TEMP	27.05	33.94	37.81	29.22	30.63	28.95
TEMP	27.39	28.39	26.92	26.80	27.78	26.80
TEMP	28.85	27.02	26.02	26.75	42.87	27.98
MEAN	-6.96	-6.03	-4.70	-2.88	-1.27	0.91
MEAN	2.93	5.07	7.28	9.25	9.46	
SD	0.07	0.65	0.79	0.98	0.89	0.90
SD	1.11	1.15	1.17	1.14	0.07	

Test # 7

POS	0.	50.	100.	150.	200.	250.
POS	300.	350.	400.	450.	500.	
TEMP	27.23	34.22	38.24	29.50	30.96	29.30
TEMP	27.74	28.79	27.30	27.18	28.21	27.18
TEMP	29.14	27.33	26.28	27.06	43.14	28.40
MEAN	-7.48	-6.57	-5.28	-3.58	-1.63	0.36
MEAN	2.46	4.57	6.75	8.65	9.28	
SD	0.04	0.53	0.62	0.64	0.68	0.75
SD	0.87	0.98	0.94	1.03	0.12	

Test # 8

POS	0.	50.	100.	150.	200.	250.
POS	300.	350.	400.	450.	500.	
TEMP	27.23	35.24	38.41	~~30.60~~	~~31.86~~	30.02
TEMP	28.49	29.58	28.10	28.00	29.10	27.97
TEMP	29.53	27.88	26.82	27.68	43.41	29.29
MEAN	-8.33	-7.73	-6.27	-4.42	-2.49	-0.56
MEAN	1.46	3.74	5.95	7.81	8.32	
SD	0.05	0.64	0.88	0.78	0.83	0.89
SD	1.09	1.07	1.03	1.10	0.09	

Test # 9

POS	0.	50.	100.	150.	200.	250.
POS	300.	350.	400.	450.	500.	
TEMP	27.18	33.03	37.96	29.31	30.53	29.97
TEMP	28.61	29.80	28.29	28.14	29.05	27.88
TEMP	29.39	27.80	26.53	27.41	43.34	29.46
MEAN	-4.00	-3.09	-1.54	0.22	2.19	4.17
MEAN	6.13	8.45	10.30	12.11	12.83	
SD	0.31	0.69	0.67	0.68	0.96	0.90
SD	0.95	1.16	1.06	1.03	0.21	

Test # 10

POS	0.	50.	100.	150.	200.	250.
POS	300.	350.	400.	450.	500.	
TEMP	27.18	33.08	38.18	30.46	31.19	30.13
TEMP	28.64	29.93	28.47	28.35	29.30	28.18
TEMP	29.59	27.96	26.88	27.76	43.21	29.66
MEAN	-4.25	-3.20	-1.75	-0.14	1.76	3.76
MEAN	5.70	7.95	10.04	11.94	12.28	
SD	0.06	0.50	0.65	0.68	0.68	0.73
SD	0.83	0.88	0.87	0.98	0.11	

ACTUAL DATA

						SPREAD Up	SPREAD Down
Test # 1							
-0.04	-0.16	-0.16	-0.39	-0.39	-0.55	0.09	-0.09
0.16	0.79	-0.12	0.63	-0.35	0.43	-0.36	0.36
0.94	1.89	0.75	1.89	0.75	1.65	-0.50	0.50
2.36	3.27	2.13	3.15	2.20	3.07	-0.47	0.47
3.98	4.96	3.70	4.84	3.66	4.65	-0.52	0.52
5.47	6.57	5.28	6.38	5.20	6.26	-0.54	0.54
7.09	8.27	6.81	8.11	6.81	7.91	-0.60	0.60
8.78	10.08	8.62	9.96	8.58	9.84	-0.65	0.65
10.59	11.97	10.47	11.81	10.31	11.61	-0.67	0.67
12.13	13.66	12.01	13.54	11.97	13.43	-0.75	0.75
13.39	13.39	13.39	13.39	13.19	13.19	0.	0.
Test # 2							
-0.91	-1.26	-1.26	-1.38	-1.38	-1.42	0.09	-0.09
-0.35	0.	-0.87	-0.08	-0.94	-0.28	-0.30	0.30
0.51	1.34	0.20	1.22	0.04	1.06	-0.48	0.48
1.89	2.95	1.81	2.76	1.50	2.80	-0.55	0.55
3.70	4.72	3.66	4.53	3.23	4.49	-0.52	0.52
5.35	6.57	5.12	6.34	4.96	6.34	-0.64	0.64
6.85	8.35	6.73	8.15	6.69	8.15	-0.73	0.73
8.70	10.35	8.46	10.08	8.39	10.08	-0.83	0.83
10.59	12.01	10.31	11.85	10.12	11.81	-0.77	0.77
12.13	13.82	11.97	13.78	12.01	13.58	-0.85	0.85
13.54	13.54	13.35	13.35	13.23	13.23	0.	0.
Test # 3							
-3.74	-3.70	-3.70	-3.86	-3.86	-4.29	0.09	-0.09
-3.03	-2.64	-3.43	-2.64	-3.46	-2.60	-0.34	0.34
-2.13	-1.10	-2.28	-1.22	-2.17	-1.38	-0.48	0.48
-0.47	0.71	-0.79	0.43	-0.71	0.31	-0.57	0.57
0.94	2.36	1.06	2.13	1.10	2.13	-0.58	0.58
2.72	4.13	2.60	3.98	2.87	4.02	-0.66	0.66
4.49	6.18	4.17	5.75	4.29	5.79	-0.79	0.79
6.42	7.91	6.42	7.91	6.38	7.64	-0.71	0.71
8.03	9.80	8.23	9.76	8.31	9.61	-0.77	0.77
10.04	11.57	9.88	11.65	10.00	11.46	-0.79	0.79
11.38	11.38	11.38	11.38	11.38	11.38	0.	0.
Test # 4							
-5.63	-5.71	-5.71	-5.51	-5.51	-5.91	0.05	-0.05
-5.51	-4.33	-5.63	-3.90	-5.71	-4.45	-0.70	0.70
-4.29	-2.72	-4.13	-2.68	-4.02	-3.15	-0.65	0.65
-2.48	-0.98	-2.52	-0.83	-2.36	-1.10	-0.74	0.74
-0.47	0.98	-0.55	0.67	-0.71	0.87	-0.71	0.71
1.22	3.07	1.22	2.87	1.22	2.91	-0.87	0.87
3.15	4.96	3.27	5.08	3.07	4.92	-0.91	0.91
5.20	7.24	5.31	7.17	5.43	7.13	-0.93	0.93
7.20	9.49	7.20	9.21	7.13	8.90	-1.01	1.01
8.82	10.71	8.86	10.83	8.94	10.94	-0.98	0.98
9.96	9.96	10.24	10.24	10.24	10.24	0.	0.
Test # 5							
-6.54	-6.50	-6.50	-6.57	-6.57	-6.54	0.00	0.00
-5.98	-5.43	-5.83	-5.16	-6.10	-5.16	-0.36	0.36
-4.65	-3.82	-4.76	-3.58	-4.72	-4.02	-0.45	0.45
-2.95	-1.85	-3.15	-1.65	-3.11	-1.46	-0.71	0.71
-1.10	0.47	-1.02	-0.12	-1.22	0.28	-0.66	0.66
0.59	2.13	0.83	1.61	0.91	1.89	-0.55	0.55
2.72	4.17	2.64	3.94	2.76	4.29	-0.72	0.72
4.57	6.26	4.47	6.02	4.49	6.42	-0.86	0.86

6.26	8.15	6.57	8.39	6.38	8.15	-0.91	0.91
8.07	9.76	8.27	9.96	8.23	10.20	-0.89	0.89
9.76	9.76	10.16	10.16	10.20	10.20	0.	0
Test # 6							
-6.93	-7.05	-7.05	-6.89	-6.89	-6.93	0.	0.
-6.61	-5.63	-6.57	-5.24	-6.65	-5.47	-0.58	0.58
-5.08	-3.94	-5.47	-3.98	-5.67	-4.09	-0.70	0.70
-3.54	-2.01	-3.82	-2.32	-3.90	-1.69	-0.87	0.87
-1.93	-0.39	-2.09	-0.47	-2.20	-0.51	-0.81	0.81
0.31	1.61	0.04	1.81	-0.08	1.73	-0.81	0.81
2.28	4.02	1.73	4.02	1.81	3.74	-0.99	0.99
4.41	6.06	3.86	6.38	3.86	5.83	-1.02	1.02
6.50	8.07	6.14	8.66	6.06	8.23	-1.04	1.04
8.19	10.20	8.58	10.35	7.91	10.28	-1.02	1.02
9.49	9.49	9.53	9.53	9.37	9.37	0.	0.
Test # 7							
-7.52	-7.44	-7.44	-7.52	-7.52	-7.44	-0.01	0.01
-7.05	-5.98	-7.01	-6.18	-7.09	-6.10	-0.48	0.48
-5.87	-4.53	-5.87	-4.84	-5.79	-4.80	-0.56	0.56
-4.21	-2.91	-4.13	-2.95	-4.13	-3.11	-0.58	0.58
-2.28	-0.83	-2.17	-1.14	-2.28	-1.06	-0.62	0.62
-0.28	1.14	-0.35	1.10	-0.31	0.87	-0.68	0.68
1.65	3.46	1.73	3.23	1.65	3.03	-0.78	0.78
3.74	5.55	3.66	5.47	3.62	5.35	-0.89	0.89
6.02	7.80	5.91	7.64	5.79	7.36	-0.85	0.85
7.83	9.69	7.83	9.53	7.48	9.53	-0.93	0.93
9.13	9.13	9.41	9.41	9.29	9.29	0.	0.
Test # 8							
-8.39	-8.27	-8.27	-8.35	-8.35	-8.35	-0.01	0.01
-8.31	-7.13	-8.31	-7.32	-8.31	-7.01	-0.58	0.58
-7.13	-5.43	-7.13	-5.51	-6.97	-5.47	-0.80	0.80
-5.31	-3.50	-5.12	-3.78	-4.88	-3.90	-0.69	0.69
-3.31	-1.85	-3.35	-1.89	-3.03	-1.50	-0.74	0.74
-1.38	0.39	-1.50	0.04	-1.22	0.28	-0.80	0.80
0.55	2.20	0.31	2.68	0.55	2.44	-0.98	0.98
2.87	4.69	2.91	4.72	2.52	4.72	-0.97	0.97
4.96	6.85	5.04	7.13	5.08	6.65	-0.93	0.93
6.77	8.90	6.77	8.78	6.89	8.78	-1.00	1.00
8.31	8.31	8.23	8.23	8.43	8.43	0.	0.
Test # 9							
-4.61	-3.86	-3.86	-3.82	-3.82	-4.02	-0.10	0.10
-4.13	-2.32	-3.58	-2.64	-3.27	-2.60	-0.57	0.57
-2.32	-0.98	-1.97	-0.79	-2.13	-1.06	-0.60	0.60
-0.87	0.83	-0.16	0.75	0.	0.75	-0.56	0.56
1.14	3.31	1.69	3.15	1.22	2.64	-0.84	0.84
3.11	5.04	3.54	5.04	3.43	4.84	-0.81	0.81
4.88	6.77	5.67	7.17	5.35	6.93	-0.83	0.83
6.93	9.49	7.52	9.49	7.83	9.45	-1.02	1.02
9.02	11.06	9.61	11.34	9.41	11.34	-0.95	0.95
10.94	12.95	11.10	13.03	11.50	13.11	-0.93	0.93
12.56	12.56	12.95	12.95	12.99	12.99	0.	0.
Test # 10							
-4.17	-4.29	-4.29	-4.29	-4.29	-4.17	0.	0.
-3.66	-2.83	-3.58	-2.76	-3.70	-2.64	-0.45	0.45
-2.36	-1.10	-2.40	-1.18	-2.24	-1.18	-0.59	0.59
-0.79	0.39	-0.87	0.47	-0.59	0.55	-0.61	0.61
1.18	2.40	1.10	2.36	1.14	2.36	-0.62	0.62
3.03	4.41	3.15	4.45	3.11	4.41	-0.66	0.66
4.96	6.46	5.00	6.50	4.88	6.42	-0.75	0.75
7.05	8.74	7.24	8.82	7.17	8.70	-0.80	0.80

9.25	10.98	9.29	10.67	9.21	10.83	-0.79	0.79
11.18	12.91	11.06	12.80	10.91	12.76	-0.89	0.89
12.40	12.40	12.17	12.17	12.28	12.28	0.	0.

Regression Equation

0.35e-1*X - 1.16*T2 + 1.42*T8 - 8.94

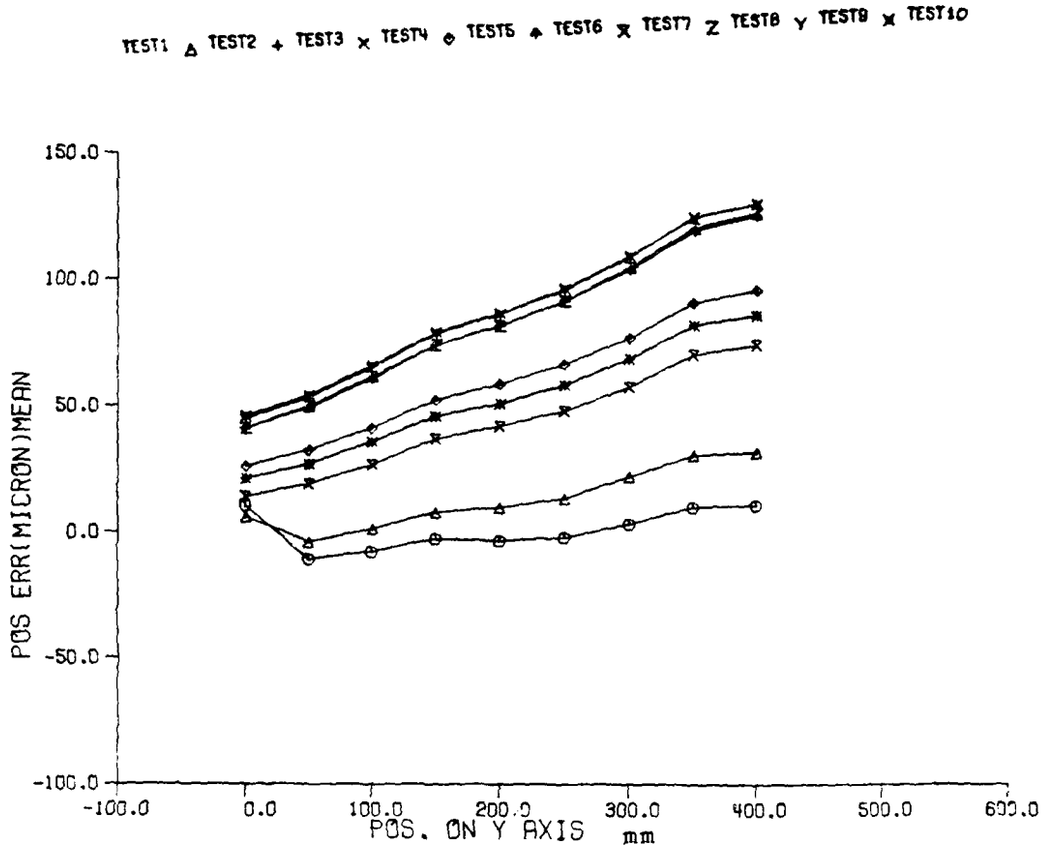
TEST1 △ TEST2 + TEST3 × TEST4 ⊕ TEST5 ◆ TEST6 ✱ TEST7 Z TEST8 Y TEST9 ✱ TEST10
150.0
100.0
50.0
0.0
-50.0
-100.0
POS ERR(MICRON)MEAN
-100.0
0.0
100.0
200.0
300.0
400.0
500.0
600.0
POS. ON Y AXIS mm

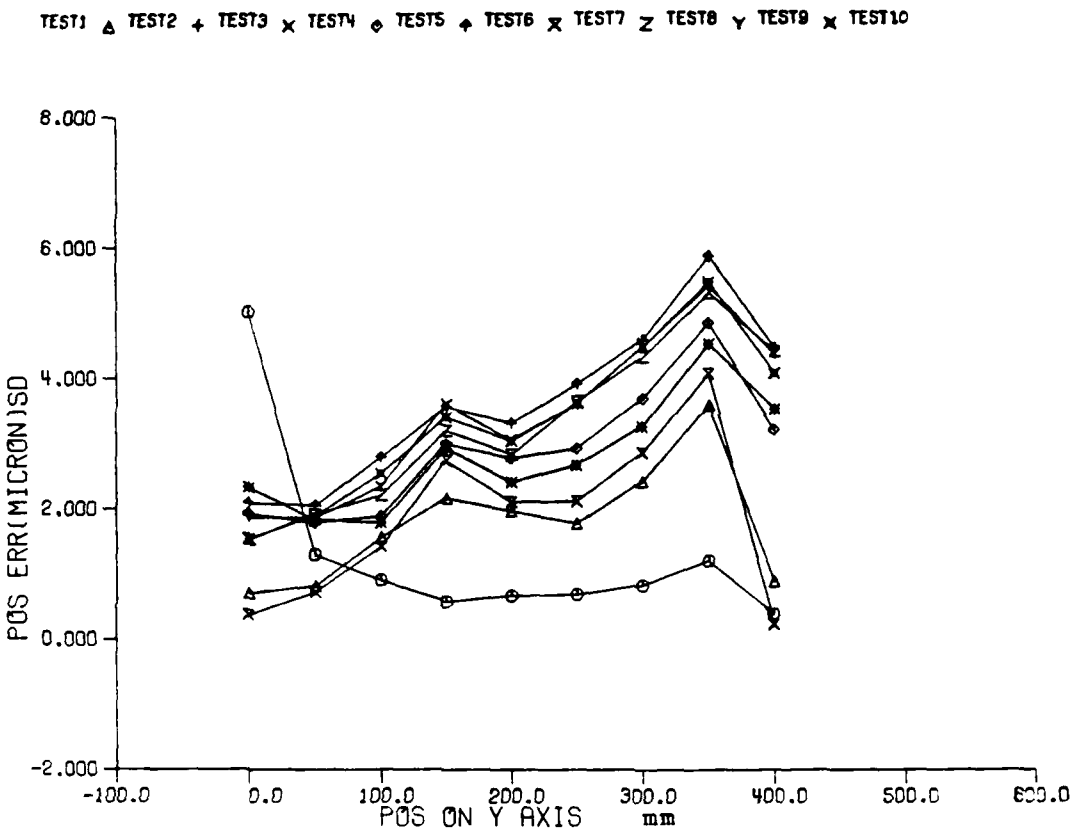
TEST1 TEST2 TEST3 TEST4 TEST5 TEST6 TEST7 TEST8 TEST9 TEST10
8.000
6.000
4.000
2.000
0.000
-2.000
POS ERR(MICRON)SD
-100.0
0.0
100.0
200.0
300.0
400.0
500.0
600.0
POS ON Y AXIS mm

Y AXIS

RESULTS OF POSITION ERROR (micron)

X axis at 140.000 mms
Y axis at 140.000 mms
Z axis at 230.000 mms
Dir of laser F

Test # 1

POS	0.	50.	100.	150.	200.	250.
POS	300.	350.	400.			
TEMP	25.75	27.99	27.91	27.33	27.87	27.28
TEMP	27.50	27.08	26.55	26.13	25.88	25.79
TEMP	25.66	29.55	27.50	26.94	26.65	26.45
TEMP	26.16	39.79	26.50			
MEAN	10.33	-10.93	-7.97	-2.92	-3.62	-2.28
MEAN	3.13	9.68	10.53			
SD	5.02	1.30	0.91	0.58	0.67	0.69
SD	0.83	1.21	0.40			

Test # 2

POS	0.	50.	100.	150.	200.	250.
POS	300.	350.	400.			
TEMP	27.38	32.77	32.77	30.35	29.93	29.93
TEMP	29.74	28.88	28.57	28.06	27.37	27.25
TEMP	26.66	32.82	30.23	29.23	28.62	28.03
TEMP	27.47	41.86	29.10			
MEAN	5.68	-4.18	1.08	7.58	9.50	13.10
MEAN	21.82	30.35	31.53			
SD	0.71	0.82	1.56	2.17	1.97	1.78
SD	2.42	3.60	0.89			

Test # 3

POS	0.	50.	100.	150.	200.	250.
POS	300.	350.	400.			
TEMP	27.75	37.42	37.47	33.57	30.69	31.73
TEMP	31.78	31.30	30.96	30.47	29.57	28.79
TEMP	28.23	35.69	32.05	30.84	30.50	29.38
TEMP	29.01	42.50	29.10			
MEAN	20.85	26.57	35.54	45.64	50.67	58.04
MEAN	68.47	81.82	85.74			
SD	2.33	1.83	1.79	2.94	2.41	2.67
SD	3.27	4.54	3.54			

Test # 4

POS	0.	50.	100.	150.	200.	250.
POS	300.	350.	400.			
TEMP	27.75	37.42	37.47	33.57	30.69	31.73
TEMP	31.78	31.30	30.96	30.47	29.57	28.79
TEMP	28.23	35.69	32.05	30.84	30.50	29.38
TEMP	29.01	42.50	30.80			
MEAN	20.85	26.57	35.54	45.64	50.67	58.04
MEAN	68.47	81.82	85.74			
SD	2.33	1.83	1.79	2.94	2.41	2.67
SD	3.27	4.54	3.54			

Test # 5

POS	0.	50	100.	150.	200.	250.
POS	300	350.	400.			
TEMP	27.90	39.97	38.35	34.32	30.88	32.36

TEMP	32.44	32.07	31.95	31.22	30.57	29.50
TEMP	29.01	36.15	32.73	31.52	31.25	29.99
TEMP	29.74	42.67	30.80			
MEAN	25.80	32.22	40.87	52.05	58.35	66.20
MEAN	76.55	90.60	95.67			
SD	1.93	1.78	1.88	3.01	2.78	2.93
SD	3.69	4.86	3.22			

Test # 6

POS	0.	50.	100.	150.	200.	250.
POS	300.	350.	400.			
TEMP	27.50	37.88	39.41	35.34	30.50	32.95
TEMP	32.66	32.47	32.51	31.57	31.03	29.65
TEMP	29.11	36.42	32.92	31.52	31.28	29.96
TEMP	29.67	42.38	31.00			
MEAN	40.85	48.90	60.28	73.85	81.47	91.17
MEAN	103.70	119.35	125.26			
SD	2.09	2.06	2.80	3.57	3.33	3.92
SD	4.61	5.89	4.48			

Test # 7

POS	0.	50.	100.	150.	200.	250.
POS	300.	350.	400.			
TEMP	27.33	35.78	36.74	33.66	30.29	32.33
TEMP	32.37	32.35	32.47	31.50	31.41	29.95
TEMP	29.63	34.62	32.62	31.53	31.50	30.27
TEMP	30.10	42.23	31.50			
MEAN	13.67	18.65	26.33	36.59	41.74	47.75
MEAN	57.33	70.08	74.04			
SD	0.38	0.72	1.41	2.75	2.11	2.11
SD	2.87	4.08	0.23			

Test # 8

POS	0.	50.	100.	150.	200.	250.
POS	300.	350.	400.			
TEMP	27.35	36.09	37.81	35.12	29.39	32.23
TEMP	32.20	32.30	32.44	31.52	31.18	29.70
TEMP	29.39	36.08	32.40	31.43	31.28	30.12
TEMP	29.85	41.20	31.50			
MEAN	40.87	49.55	61.32	73.75	81.30	91.19
MEAN	104.79	120.43	126.33			
SD	1.54	1.92	2.21	3.21	2.84	3.65
SD	4.34	5.32	4.42			

Test # 9

POS	0.	50.	100.	150.	200.	250.
POS	300.	350.	400.			
TEMP	27.23	36.20	38.09	34.99	28.89	32.09
TEMP	31.93	32.17	32.39	31.51	31.22	29.74
TEMP	29.42	35.81	32.24	31.29	31.13	30.03
TEMP	29.74	40.76	31.50			
MEAN	44.58	53.00	64.52	78.15	85.91	95.50
MEAN	108.85	124.68	129.70			
SD	1.87	1.86	2.34	3.61	3.06	3.61
SD	4.49	5.43	4.38			

Test # 10

POS	0.	50	100.	150.	200.	250.
POS	300.	350.	400.			
TEMP	26.63	35.84	38.07	34.93	28.55	31.88

TEMP	31.81	32.15	32.34	31.42	31.13	29.70
TEMP	29.41	35.65	32.13	31.16	30.94	30.01
TEMP	29.65	40.44	31.00			
MEAN	45.77	53.85	65.73	78.83	86.35	96.17
MEAN	109.30	124.39	129.96			
SD	1.55	1.89	2.54	3.41	3.05	3.63
SD	4.49	5.49	4.08			

ACTUAL DATA

						SPREAD Up	SPREAD Down
Test # 1							
0.10	12.30	12.30	12.30	12.30	12.70	-2.10	2.10
-9.70	-11.90	-9.50	-12.20	-10.10	-12.20	1.17	-1.17
-7.30	-8.80	-6.60	-8.20	-7.90	-9.00	0.70	-0.70
-2.11	-2.81	-2.50	-3.01	-3.69	-3.40	0.15	-0.15
-3.49	-2.50	-3.91	-3.40	-4.50	-3.91	-0.35	0.35
-1.80	-1.69	-2.81	-1.60	-3.30	-2.50	-0.35	0.35
3.11	4.30	2.20	3.69	2.20	3.30	-0.63	0.63
8.91	11.20	9.09	10.59	8.00	10.31	-1.02	1.02
10.99	10.99	10.50	10.50	10.10	10.10	0.	0.
Test # 2							
4.90	5.20	5.20	6.00	6.00	6.80	-0.32	0.32
-3.10	-3.70	-4.70	-3.80	-5.40	-4.40	-0.22	0.22
1.40	3.10	-0.40	2.10	-1.10	1.40	-1.12	1.12
7.00	10.50	6.00	8.10	4.59	9.29	-1.72	1.72
8.80	11.99	7.71	11.31	7.10	10.10	-1.63	1.63
12.70	15.50	11.60	14.10	10.70	14.01	-1.44	1.44
21.00	24.81	19.81	24.20	18.71	22.40	-1.98	1.98
28.69	34.61	27.10	33.81	26.00	31.89	-3.09	3.09
32.59	32.59	31.40	31.40	30.61	30.61	0.	0.
Test # 3							
24.90	21.40	21.40	19.60	19.60	18.20	1.12	-1.12
29.10	28.20	26.60	26.20	25.00	24.30	0.33	-0.33
36.90	37.90	35.10	36.10	33.10	34.10	-0.50	0.50
45.81	49.80	43.90	47.61	41.31	45.39	-1.97	1.97
51.41	54.20	49.70	52.00	47.20	49.50	-1.23	1.23
59.91	61.71	57.01	59.10	54.50	56.00	-0.90	0.90
70.01	73.30	67.20	69.79	63.90	66.59	-1.43	1.43
82.31	88.59	78.49	84.81	75.81	80.90	-2.95	2.95
89.81	89.81	85.51	85.51	81.91	81.91	0.	0.
Test # 4							
24.90	21.40	21.40	19.60	19.60	18.20	1.12	-1.12
29.10	28.20	26.60	26.20	25.00	24.30	0.33	-0.33
36.90	37.90	35.10	36.10	33.10	34.10	-0.50	0.50
45.81	49.80	43.90	47.61	41.31	45.39	-1.97	1.97
51.41	54.20	49.70	52.00	47.20	49.50	-1.23	1.23
59.91	61.71	57.01	59.10	54.50	56.00	-0.90	0.90
70.01	73.30	67.20	69.79	63.90	66.59	-1.43	1.43
82.31	88.59	78.49	84.81	75.81	80.90	-2.95	2.95
89.81	89.81	85.51	85.51	81.91	81.91	0.	0.
Test # 5							
28.70	26.70	26.70	24.70	24.70	23.30	0.90	-0.90

34.60	33.90	32.10	32.10	30.30	30.30	0.12	-0.12
42.40	43.50	39.80	40.90	38.20	40.40	-0.73	0.73
52.40	56.40	49.80	53.50	47.70	52.51	-2.08	2.08
59.69	62.19	56.70	59.80	54.31	57.40	-1.45	1.45
68.10	70.21	64.90	67.31	61.90	64.80	-1.24	1.24
77.91	82.31	74.31	78.19	71.81	74.80	-1.88	1.88
90.61	97.60	87.10	93.90	83.80	90.61	-3.43	3.43
99.30	99.30	95.61	95.61	92.10	92.10	0.	0.

Test # 6

43.80	41.90	41.90	39.80	39.80	37.90	0.98	-0.98
51.80	50.40	49.10	48.70	47.30	46.10	0.50	-0.50
62.60	64.00	59.80	60.90	56.80	57.60	-0.55	0.55
75.10	78.60	71.79	76.10	68.41	73.10	-2.08	2.08
83.40	86.20	80.00	82.79	76.80	79.61	-1.40	1.40
94.10	96.41	89.60	92.41	85.49	89.00	-1.44	1.44
106.41	109.89	101.41	105.99	96.98	101.50	-2.10	2.10
120.70	127.81	115.91	122.99	110.81	117.89	-3.55	3.55
130.49	130.49	124.79	124.79	120.51	120.51	0.	0.

Test # 7

14.30	13.80	13.80	13.40	13.40	13.30	0.17	-0.17
19.20	19.50	18.20	18.90	17.50	18.60	-0.35	0.35
25.50	28.20	25.00	27.40	24.80	27.10	-1.23	1.23
34.61	39.51	34.10	38.70	33.60	39.00	-2.48	2.48
39.51	44.10	39.90	43.50	40.10	43.30	-1.90	1.90
46.40	50.20	45.30	49.39	45.90	49.30	-1.88	1.88
55.21	60.79	54.81	59.39	54.29	59.51	-2.56	2.56
66.99	74.58	66.19	73.70	66.01	73.00	-3.68	3.68
74.01	74.01	74.31	74.31	73.79	73.79	0.	0.

Test # 8

42.80	41.80	41.80	40.10	40.10	38.60	0.70	-0.70
52.40	51.10	49.70	48.80	47.80	47.50	0.42	-0.42
63.00	64.50	60.80	61.40	58.30	59.90	-0.62	0.62
74.91	78.29	71.90	75.81	69.31	72.30	-1.71	1.71
83.30	85.21	80.20	82.31	77.39	79.41	-1.00	1.00
94.10	96.21	89.71	92.30	86.70	88.10	-1.02	1.02
106.90	110.90	102.51	106.99	98.60	102.81	-2.12	2.12
121.89	128.30	117.40	123.11	112.70	119.20	-3.10	3.10
131.29	131.29	126.31	126.31	121.40	121.40	0.	0.

Test # 9

47.00	45.60	45.60	43.80	43.80	41.70	0.88	-0.88
55.20	55.10	52.50	53.00	51.60	50.60	0.10	-0.10
66.40	67.90	63.50	64.90	61.70	62.70	-0.65	0.65
78.99	83.80	76.10	79.90	73.30	76.80	-2.02	2.02
87.91	90.19	84.59	87.10	81.70	84.00	-1.18	1.18
97.90	100.60	93.90	96.80	90.61	93.20	-1.37	1.37
110.81	115.11	106.29	111.39	102.39	107.09	-2.35	2.35
125.70	132.69	121.19	127.69	116.91	123.90	-3.41	3.41
134.70	134.70	129.49	129.49	124.91	124.91	0.	0

Test # 10

47.80	46.60	46.60	45.10	45.10	43.40	0.73	-0.73
55.80	56.00	53.20	54.50	51.50	52.10	-0.35	0.35
67.10	69.20	64.80	67.00	62.00	64.30	-1.10	1.10
79.19	83.69	76.51	81.21	74.01	78.40	-2.27	2.27
88.00	90.61	84.59	87.80	82.00	85.10	-1.49	1.49
97.79	101.30	94.50	98.01	90.90	94.50	-1.77	1.77

110.81	115.30	106.51	112.30	102.60	108.31	-2.67	2.67
125.21	131.90	120.61	128.60	116.61	123.41	-3.58	3.58
134.61	134.61	129.79	129.79	125.49	125.49	0.	0.

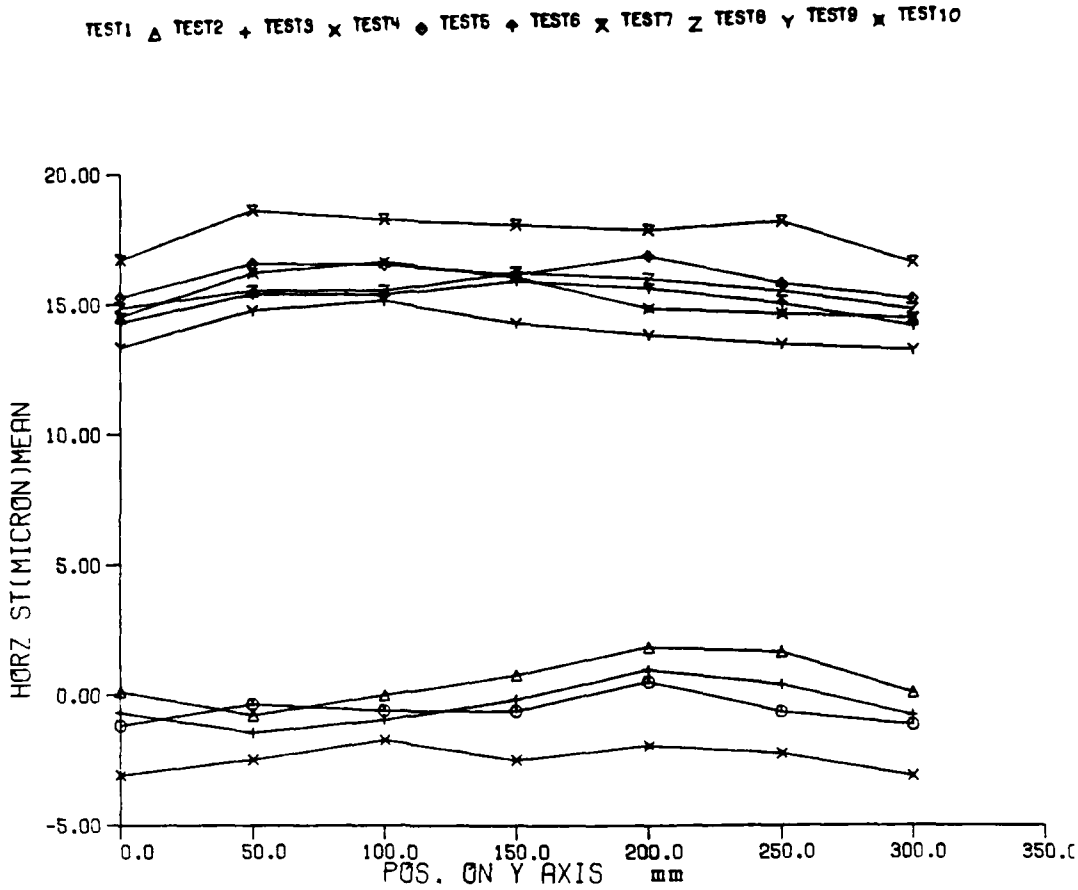
TEST1 TEST2 TEST3 TEST4 TEST5 TEST6 TEST7 TEST8 TEST9 TEST10
20.00
15.00
10.00
5.00
0.00
-5.00
HORZ ST(MICRON)MEAN
0.0
50.0
100.0
150.0
200.0
250.0
300.0
350.0
POS. ON Y AXIS mm

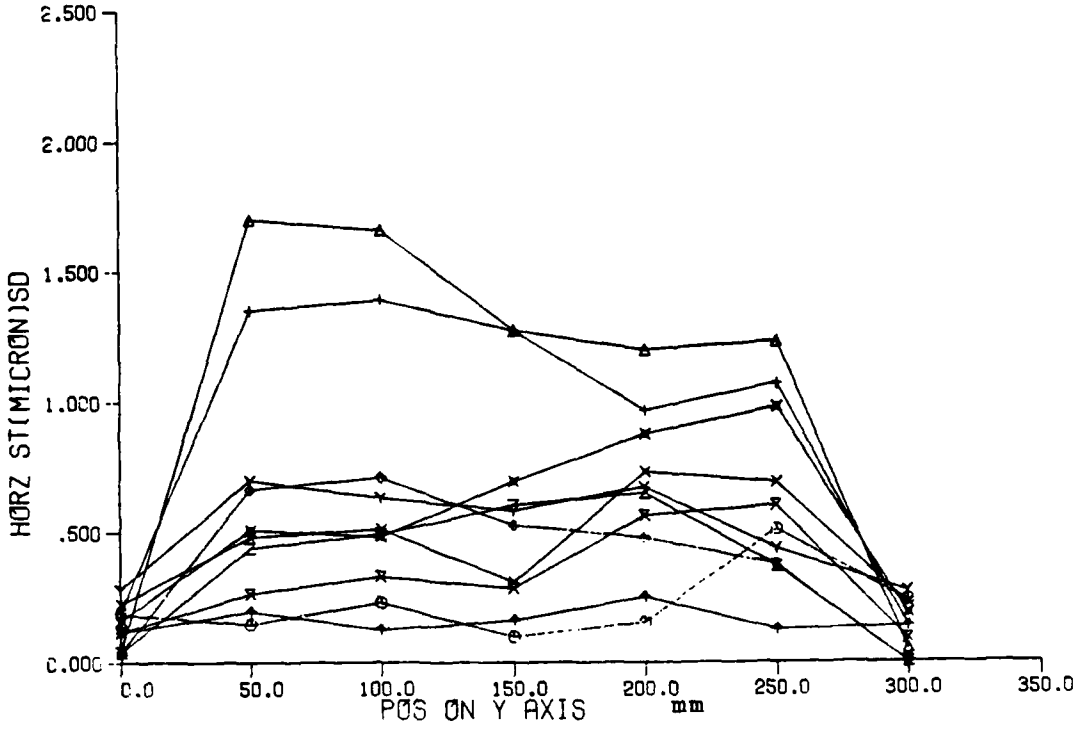
2.500
2.000
1.500
1.000
.500
0.000
HØRZ ST(MICRØN)SD
0.0
50.0
100.0
150.0
200.0
250.0
300.0
350.0
PØS ØN Y AXIS
mm

Y AXIS
RESULTS OF HORIZONTAL STRAIGHTNESS (micron)

X axis at 197.64 mms
Y axis at 299.99 mms
Z axis at 168.36 mms
Dir of laser F

Test# 1

POS	0.	50.	100.	150.	200.	250.	300.
TEMP	19.93	22.10	23.52	23.70	20.87	22.53	
TEMP	22.88	22.39	22.76	21.58	21.76	20.95	
TEMP	21.02	24.82	22.85	22.36	22.39	22.05	
TEMP	22.00	33.26	22.73				
MEAN	-1.17	-0.34	-0.58	-0.60	0.53	-0.61	-1.10
SD	0.19	0.15	0.23	0.10	0.16	0.51	0.24

Test# 2

POS	0	50	100.	150.	200.	250.	300.
TEMP	19.83	22.55	24.57	24.32	20.97	23.04	
TEMP	23.07	22.58	23.02	21.81	22.01	21.22	
TEMP	21.22	25.97	23.27	22.60	22.87	22.23	
TEMP	22.28	33.44	22.97				
MEAN	0.13	-0.76	0.01	0.78	1.87	1.69	0.13
SD	0.05	1.70	1.66	1.27	1.20	1.23	0.05

Test# 3

POS	0.	50.	100.	150.	200.	250.	300.
TEMP	18.80	20.59	22.89	23.24	20.07	22.23	
TEMP	22.18	21.93	22.37	21.16	21.41	20.69	
TEMP	20.79	24.22	22.30	21.98	21.91	21.83	
TEMP	21.58	32.23	22.24				
MEAN	-0.68	-1.43	-0.94	-0.16	0.99	0.43	-0.73
SD	0.19	1.35	1.39	1.27	0.97	1.07	0.14

Test# 4

POS	0.	50.	100.	150.	200.	250.	300.
TEMP	19.77	22.92	24.64	24.25	21.12	22.92	
TEMP	22.85	22.35	22.72	21.69	21.71	21.12	
TEMP	21.09	26.19	23.19	22.50	22.45	22.16	
TEMP	21.94	33.22	30.27				
MEAN	-3.07	-2.46	-1.72	-2.47	-1.93	-2.22	-3.07
SD	0.23	0.48	0.51	0.31	0.73	0.69	0.23

Test# 5

POS	0.	50	100	150	200.	250.	300.
TEMP	20.33	25.67	27.43	25.64	22.15	24.07	
TEMP	23.85	23.36	23.60	22.72	22.49	21.83	
TEMP	21.63	27.53	24.37	23.38	23.33	22.74	
TEMP	22.49	34.20	32.40				
MEAN	15.28	16.60	16.56	16.19	16.89	15.88	15.30
SD	0.04	0.66	0.71	0.53	0.48	0.38	0

Test# 6

POS	0	50	100	150	200.	250	300
TEMP	20.33	26.31	28.12	26.24	22.40	24.47	
TEMP	24.25	23.71	23.95	23.07	22.79	22.10	
TEMP	21.83	28.05	24.69	23.71	23.68	22.94	

TEMP	22.77	34.40	32.72				
MEAN	14.32	15.43	15.41	15.94	15.67	15.10	14.27
SD	0.12	0.20	0.13	0.16	0.25	0.13	0.14

Test# 7

POS	0.	50	100	150	200	250.	300.
TEMP	21.00	27.13	29.11	26.93	22.78	25.07	
TEMP	24.75	24.23	24.48	23.47	23.22	22.48	
TEMP	22.26	28.54	25.19	24.09	24.19	23.18	
TEMP	23.20	34.80	42.61				
MEAN	16.72	18.64	18.29	18.09	17.89	18.26	16.70
SD	0.12	0.26	0.33	0.29	0.56	0.60	0.09

Test# 8

POS	0.	50.	100.	150.	200	250.	300.
TEMP	21.15	27.55	30.01	27.57	22.96	25.79	
TEMP	25.22	25.03	25.30	24.07	23.92	23.08	
TEMP	22.81	28.55	25.59	24.58	24.91	23.60	
TEMP	23.75	35.07	45.79				
MEAN	14.88	15.55	15.56	16.27	16.03	15.58	14.90
SD	0.04	0.44	0.49	0.60	0.65	0.37	0.

Test# 9

POS	0.	50.	100.	150.	200.	250.	300.
TEMP	21.00	27.55	29.89	28.26	22.94	25.91	
TEMP	25.62	25.32	25.64	24.39	24.27	23.21	
TEMP	22.99	29.16	25.79	24.88	24.98	23.90	
TEMP	23.80	35.02	46.36				
MEAN	13.35	14.80	15.18	14.31	13.86	13.52	13.33
SD	0.28	0.70	0.63	0.58	0.67	0.44	0.27

Test# 10

POS	0.	50.	100.	150.	200.	250.	300.
TEMP	20.83	24.34	27.45	27.55	22.56	25.81	
TEMP	25.39	25.44	25.86	24.21	24.56	23.25	
TEMP	23.20	27.30	25.42	24.78	24.88	24.02	
TEMP	23.94	34.90	47.33				
MEAN	14.55	16.25	16.66	16.09	14.89	14.70	14.57
SD	0.16	0.51	0.48	0.70	0.88	0.98	0.19

ACTUAL DATA

						SPREAD Up	SPREAD Down
Test# = 1							
-1.20	-1.20	-1.20	-1.30	-1.30	-0.80	-0.07	0.07
-0.48	-0.48	-0.45	-0.17	-0.22	-0.23	-0.04	0.04
-0.47	-0.57	-0.60	-0.23	-0.93	-0.67	-0.09	0.09
-0.55	-0.75	-0.55	-0.70	-0.55	-0.50	0.05	-0.05
0.57	0.37	0.40	0.63	0.43	0.77	-0.06	0.06
-0.22	0.08	-1.15	-1.03	-0.98	-0.37	-0.17	0.17
-1.20	-1.20	-1.30	-1.30	-0.80	-0.80	0.00	0.00
Test# = 2							
0.10	0.10	0.10	0.20	0.20	0.10	0.	0.
-2.37	0.83	-2.18	0.33	-2.33	1.15	-1.53	1.53
-1.43	1.37	-1.77	1.37	-1.27	1.80	-1.50	1.50
-0.70	1.70	-0.45	2.10	0.10	1.95	-1.13	1.13
0.43	2.63	0.97	2.73	1.07	3.40	-1.05	1.05

0.27	2.47	0.78	3.07	0.73	2.85	-1.10	1.10
0.10	0.10	0.20	0.20	0.10	0.10	0	0
Test# = 3							
-0.40	-0.60	-0.60	-0.90	-0.90	-0.70	0.05	-0.05
-2.28	-0.52	-2.73	-0.18	-2.90	0.03	-1.21	1.21
-2.37	0.67	-2.07	-0.27	-2.10	0.47	-1.23	1.23
-0.45	0.95	-1.60	0.95	-1.70	0.90	-1.09	1.09
0.67	2.23	-0.03	1.47	-0.10	1.73	-0.82	0.82
0.18	1.82	-0.97	0.68	-0.50	1.37	-0.86	0.86
-0.60	-0.60	-0.90	-0.90	-0.70	-0.70	0.	0.
Test# = 4							
-3.10	-2.80	-2.80	-3.30	-3.30	-3.10	0.	0.
-2.78	-2.13	-2.78	-2.17	-3.07	-1.83	-0.42	0.42
-2.57	-1.37	-1.67	-1.73	-1.93	-1.07	-0.33	0.33
-2.95	-2.00	-2.45	-2.40	-2.60	-2.40	-0.20	0.20
-3.03	-1.43	-2.43	-1.57	-2.07	-1.03	-0.58	0.58
-3.12	-1.37	-2.82	-2.43	-2.03	-1.57	-0.43	0.43
-2.80	-2.80	-3.30	-3.30	-3.10	-3.10	0.	0
Test# = 5							
15.20	15.30	15.30	15.30	15.30	15.30	-0.02	0.02
17.05	16.07	17.17	16.27	17.33	15.73	0.58	-0.58
16.70	16.43	17.73	16.03	16.77	15.67	0.51	-0.51
16.65	16.00	16.60	15.70	16.70	15.50	0.46	-0.46
17.30	17.07	16.87	16.17	17.43	16.53	0.31	-0.31
16.15	15.33	16.13	15.53	16.27	15.87	0.30	-0.30
15.30	15.30	15.30	15.30	15.30	15.30	0.	0.
Test# = 6							
14.40	14.40	14.40	14.30	14.30	14.10	0.05	-0.05
15.25	15.65	15.38	15.47	15.18	15.65	-0.16	0.16
15.30	15.50	15.27	15.43	15.37	15.60	-0.10	0.10
15.85	16.05	16.05	16.00	15.65	16.05	-0.09	0.09
15.90	15.80	15.83	15.67	15.63	15.20	0.12	-0.12
15.15	15.25	15.22	15.03	14.92	15.05	-0.01	0.01
14.40	14.40	14.30	14.30	14.10	14.10	0.00	0.00
Test# = 7							
16.90	16.60	16.60	16.70	16.70	16.80	0.02	-0.02
19.10	18.55	18.62	18.43	18.75	18.37	0.19	-0.19
18.80	18.00	18.43	17.87	18.30	18.33	0.22	-0.22
18.50	17.75	18.05	17.80	18.25	18.20	0.17	-0.18
18.00	17.30	18.27	17.23	18.70	17.87	0.43	-0.43
17.80	17.75	17.88	18.47	18.35	19.33	-0.25	0.25
16.60	16.60	16.70	16.70	16.80	16.80	-0.00	-0.00
Test# = 8							
14.80	14.90	14.90	14.90	14.90	14.90	-0.02	0.02
15.55	16.07	15.27	15.47	14.93	16.03	-0.30	0.30
15.00	16.03	14.93	15.73	15.57	16.07	-0.39	0.39
15.65	16.60	15.50	16.50	16.30	17.10	-0.46	0.46
16.50	16.27	15.77	15.47	15.23	16.93	-0.19	0.19
15.55	15.93	15.03	15.93	15.27	15.77	-0.30	0.30
14.90	14.90	14.90	14.90	14.90	14.90	0.	0.
Test# = 9							
13.50	13.00	13.00	13.60	13.60	13.40	0.02	-0.02
15.37	13.98	15.30	14.80	15.43	13.90	0.57	-0.57
16.03	14.37	15.50	15.30	15.37	14.50	0.46	-0.46
14.90	13.55	14.70	14.20	14.80	13.70	0.49	-0.49
14.97	13.23	13.90	13.80	14.13	13.10	0.48	-0.48
13.93	13.22	13.70	13.90	13.57	12.80	0.21	-0.21
13.00	13.00	13.60	13.60	13.40	13.40	-0.00	-0.00
Test# = 10							
14.70	14.50	14.50	14.40	14.40	14.80	-0.02	0.02

16.40	15.77	17.03	15.62	16.40	16.27	0.36	-0.36
16.80	16.13	16.87	16.03	17.30	16.83	0.33	-0.33
16.10	15.00	16.50	15.65	17.00	16.30	0.44	-0.44
15.50	13.97	15.93	13.87	15.50	14.57	0.76	-0.76
15.00	13.23	15.17	14.08	16.10	14.63	0.72	-0.72
14.50	14.50	14.40	14.40	14.80	14.80	-0.00	-0.00

Regression Equation

20.97*T5 - 11.05*T1 - 3.79*T14 - 123.43

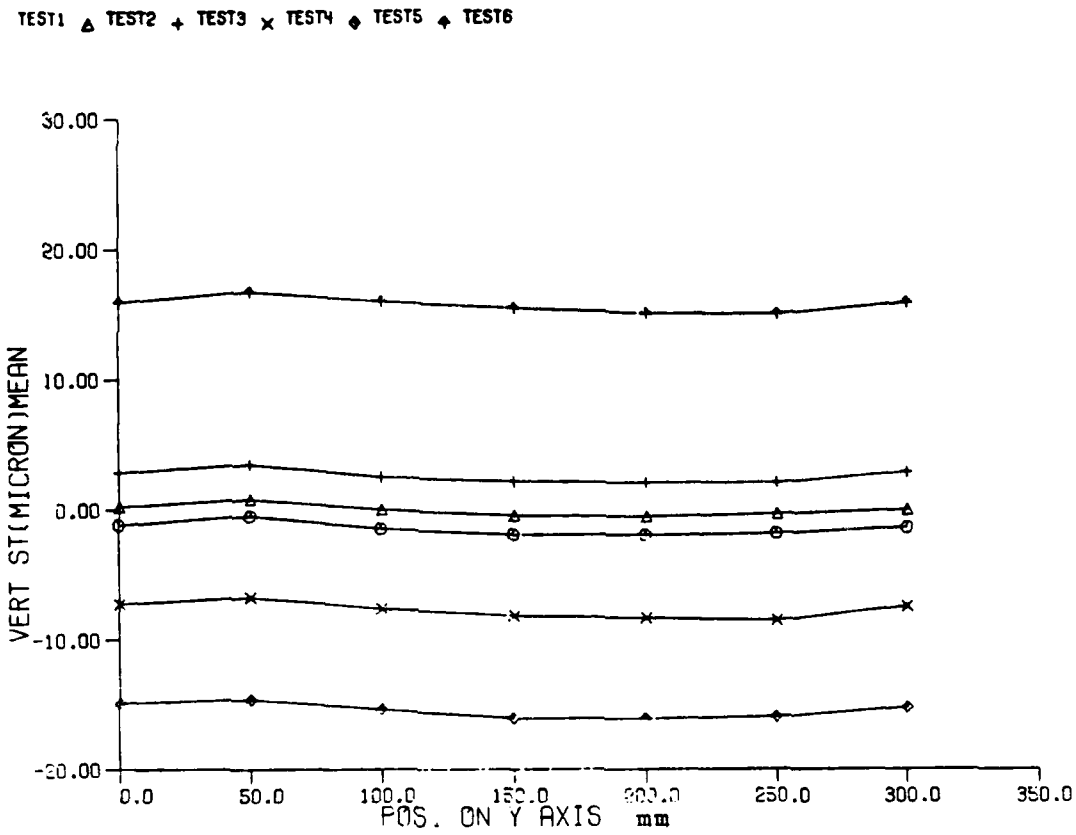
TEST1 TEST2 TEST3 TEST4 TEST5 TEST6
30.00
20.00
10.00
0.00
-10.00
-20.00
VERT ST(MICRON)MEAN
0.0
50.0
100.0
150.0
200.0
250.0
300.0
350.0
POS. ON Y AXIS mm

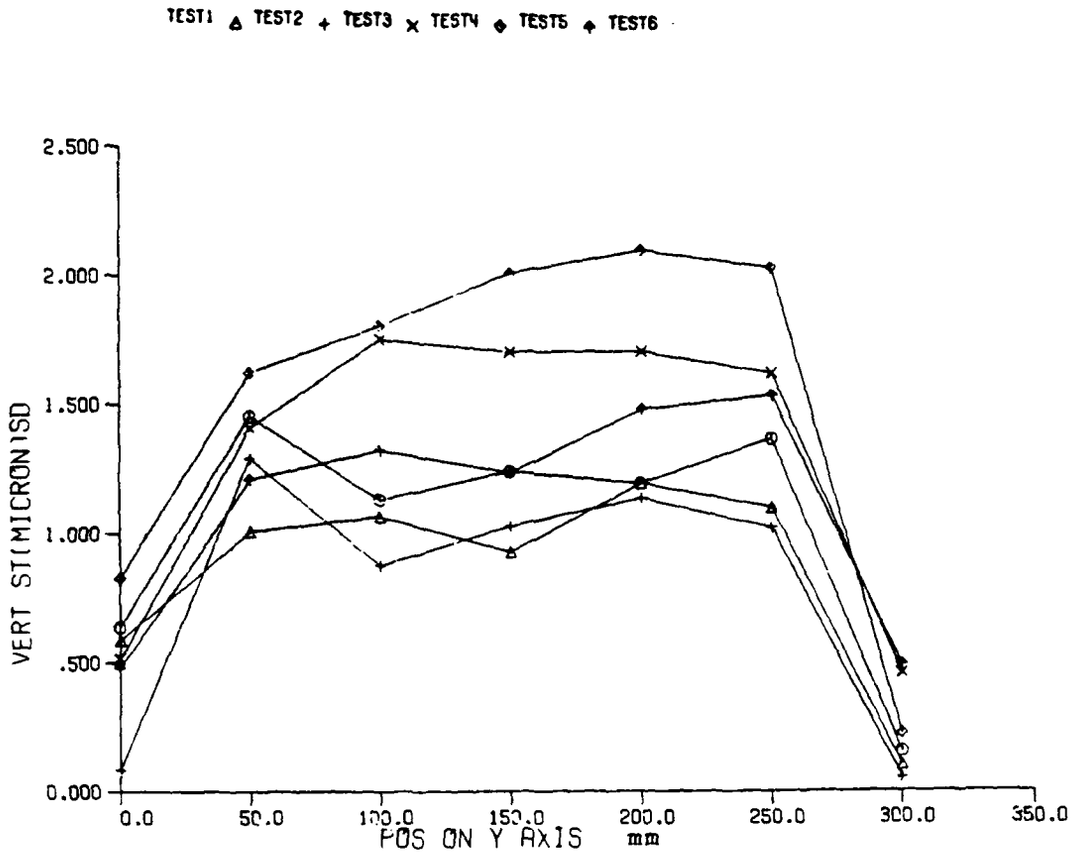
TEST1 TEST2 TEST3 TEST4 TEST5 TEST6
2.500
2.000
1.500
1.000
.500
0.000
VERT ST(MICRON)SD
0.0
50.0
100.0
150.0
200.0
250.0
300.0
350.0
POS ON Y AXIS mm

Y AXIS
RESULTS OF VERTICAL STRAIGHTNESS (micron)

X axis at 164.440 mms
Y axis at 299.999 mms
Z axis at 162.999 mms
Dir of laser F

Test# 1

POS	0.	50.	100.	150.	200.	250.	300.
TEMP	24.27	27.01	28.21	28.09	26.43	27.26	
TEMP	27.53	26.48	26.87	25.50	25.57	24.59	
TEMP	24.51	29.62	27.33	26.57	26.67	25.74	
TEMP	25.59	38.88	26.97				
MEAN	-1.17	-0.48	-1.46	-1.93	-1.98	-1.86	-1.40
SD	0.64	1.45	1.13	1.24	1.19	1.37	0.15

Test# 2

POS	0.	50.	100.	150.	200.	250.	300.
TEMP	24.92	28.23	29.87	29.69	27.30	28.70	
TEMP	28.65	28.04	28.43	27.01	27.16	26.18	
TEMP	26.13	30.81	28.79	28.01	28.11	27.33	
TEMP	27.18	39.81	28.46				
MEAN	0.22	0.80	0.01	-0.48	-0.54	-0.35	-0.03
SD	0.59	1.01	1.07	0.93	1.20	1.10	0.10

Test# 3

POS	0.	50.	100.	150.	200.	250.	300.
TEMP	24.88	29.41	31.04	30.53	27.41	29.07	
TEMP	29.09	28.36	28.78	27.46	27.48	26.43	
TEMP	26.31	32.16	29.22	28.31	28.36	27.56	
TEMP	27.36	39.61	28.62				
MEAN	2.85	3.51	2.53	2.16	2.07	2.04	2.87
SD	0.08	1.29	0.88	1.03	1.14	1.02	0.05

Test# 4

POS	0.	50.	100.	150.	200.	250.	300.
TEMP	24.85	30.36	32.18	31.20	27.31	29.39	
TEMP	29.29	28.63	29.02	27.82	27.63	26.65	
TEMP	26.38	32.83	29.46	28.48	28.48	27.75	
TEMP	27.46	39.70	36.54				
MEAN	-7.25	-6.76	-7.63	-8.19	-8.34	-8.54	-7.47
SD	0.52	1.41	1.75	1.70	1.70	1.62	0.46

Test# 5

POS	0.	50.	100.	150.	200.	250.	300.
TEMP	24.78	31.97	33.91	32.29	27.35	29.74	
TEMP	29.57	29.01	29.35	28.30	27.94	26.94	
TEMP	26.57	33.55	29.84	28.77	28.74	27.91	
TEMP	27.62	39.71	38.04				
MEAN	-14.85	-14.59	-15.38	-16.06	-16.08	-15.96	-15.23
SD	0.83	1.62	1.80	2.01	2.09	2.03	0.23

Test# 6

POS	0.	50.	100.	150.	200.	250.	300.
TEMP	24.33	26.17	27.98	29.00	25.83	27.59	
TEMP	28.00	27.54	27.98	26.81	26.81	26.02	
TEMP	25.93	29.83	27.81	27.27	27.35	26.93	

TEMP	26.76	37.97	27.86				
MEAN	15.95	16.74	16.01	15.49	15.08	15.03	15.87
SD	0.48	1.21	1.32	1.24	1.48	1.53	0.49

ACTUAL DATA

						SPREAD Up	SPREAD Down
Test# = 1							
0.10	-1.30	-1.30	-1.60	-1.60	-1.30	0.23	-0.23
2.10	-1.73	0.02	-1.73	-0.33	-1.18	1.07	-1.07
0.20	-2.67	-0.87	-2.57	-0.87	-1.97	0.94	-0.94
-0.20	-3.40	-1.15	-3.00	-1.30	-2.55	1.05	-1.05
-0.30	-3.23	-1.23	-3.13	-1.33	-2.63	1.02	-1.02
0.10	-3.47	-0.92	-3.07	-1.37	-2.42	1.13	-1.13
-1.30	-1.30	-1.60	-1.60	-1.30	-1.30	-0.00	-0.00
Test# = 2							
1.40	0.10	0.10	-0.10	-0.10	-0.10	0.25	-0.25
1.90	-0.32	1.58	-0.05	1.65	0.05	0.91	-0.91
1.30	-0.83	0.77	-1.20	0.80	-0.80	0.95	-0.95
0.80	-1.15	0.25	-1.65	-0.15	-0.95	0.77	-0.77
1.00	-1.67	0.13	-1.80	0.40	-1.30	1.05	-1.05
1.10	-1.38	0.42	-1.35	0.35	-1.25	0.98	-0.98
0.10	0.10	-0.10	-0.10	-0.10	-0.10	0.	0.
Test# = 3							
2.70	2.90	2.90	2.90	2.90	2.80	-0.02	0.02
4.18	2.22	5.43	2.43	4.20	2.58	1.10	-1.10
3.27	1.63	3.07	1.67	3.60	1.97	0.78	-0.78
3.05	1.15	3.30	1.10	2.90	1.45	0.93	-0.92
2.83	1.07	3.03	0.93	3.40	1.13	1.02	-1.02
2.92	1.08	2.77	0.97	3.20	1.32	0.92	-0.92
2.90	2.90	2.90	2.90	2.80	2.80	0.	0.
Test# = 4							
-6.60	-6.90	-6.90	-7.60	-7.60	-7.90	0.22	-0.22
-5.08	-7.53	-5.62	-8.03	-5.88	-8.43	1.24	-1.24
-5.47	-8.67	-6.13	-9.27	-6.67	-9.57	1.54	-1.54
-6.45	-9.20	-6.45	-9.70	-7.15	-10.20	1.51	-1.51
-6.63	-9.43	-6.47	-9.63	-7.43	-10.43	1.49	-1.49
-7.12	-9.37	-6.78	-10.07	-7.42	-10.47	1.43	-1.43
-6.90	-6.90	-7.60	-7.60	-7.90	-7.90	-0.00	-0.00
Test# = 5							
-13.20	-15.00	-15.00	-15.20	-15.20	-15.50	0.38	-0.38
-12.68	-15.68	-13.23	-16.07	-13.52	-16.37	1.45	-1.45
-13.17	-16.47	-13.97	-17.13	-14.23	-17.33	1.59	-1.59
-13.55	-17.65	-14.70	-17.90	-14.55	-18.00	1.79	-1.79
-13.13	-17.53	-15.13	-18.17	-14.57	-17.97	1.81	-1.81
-13.32	-17.42	-14.87	-19.03	-15.08	-16.03	1.54	-1.54
-15.00	-15.00	-15.20	-15.20	-15.50	-15.50	0.	0.
Test# = 6							
16.10	16.50	16.50	15.50	15.50	15.60	0.08	-0.08
17.97	15.63	17.78	15.82	17.75	15.47	1.10	-1.10
17.13	15.07	17.37	14.83	17.10	14.53	1.19	-1.19
16.20	15.60	16.75	14.05	16.45	13.90	0.97	-0.98
16.47	14.43	16.83	13.87	15.70	13.17	1.26	-1.26
16.53	14.17	16.92	13.88	15.55	13.13	1.30	-1.30
16.50	16.50	15.50	15.50	15.60	15.60	0.00	0.00

Regression Equation

$$-17.90*T20 + 30.30*T1 - 0.96*T21 - 15.33$$

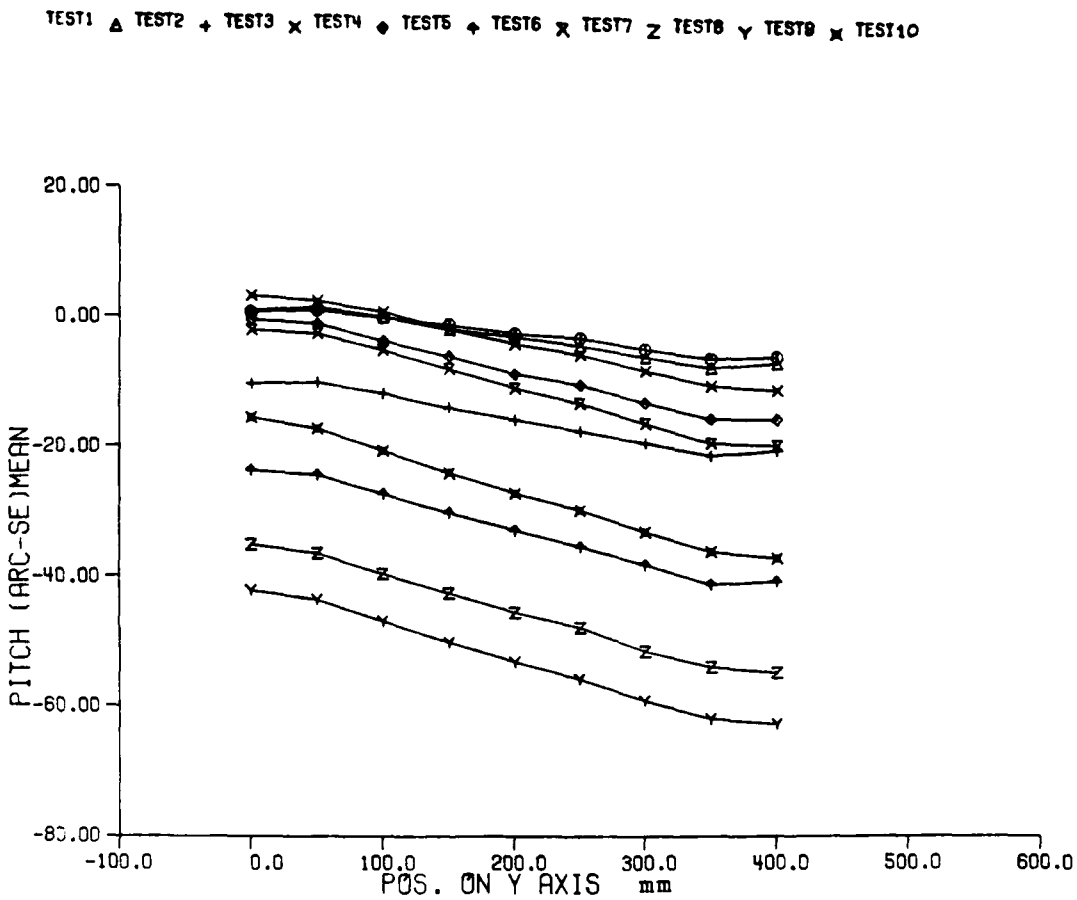
TEST1 TEST2 TEST3 TEST4 TEST5 TEST6 TEST7 TEST8 TEST9 TEST10
20.00
0.00
-20.00
-40.00
-60.00
-80.00
PITCH (ARC-SE)MEAN
-100.0
0.0
100.0
200.0
300.0
400.0
500.0
600.0
POS. ON Y AXIS mm

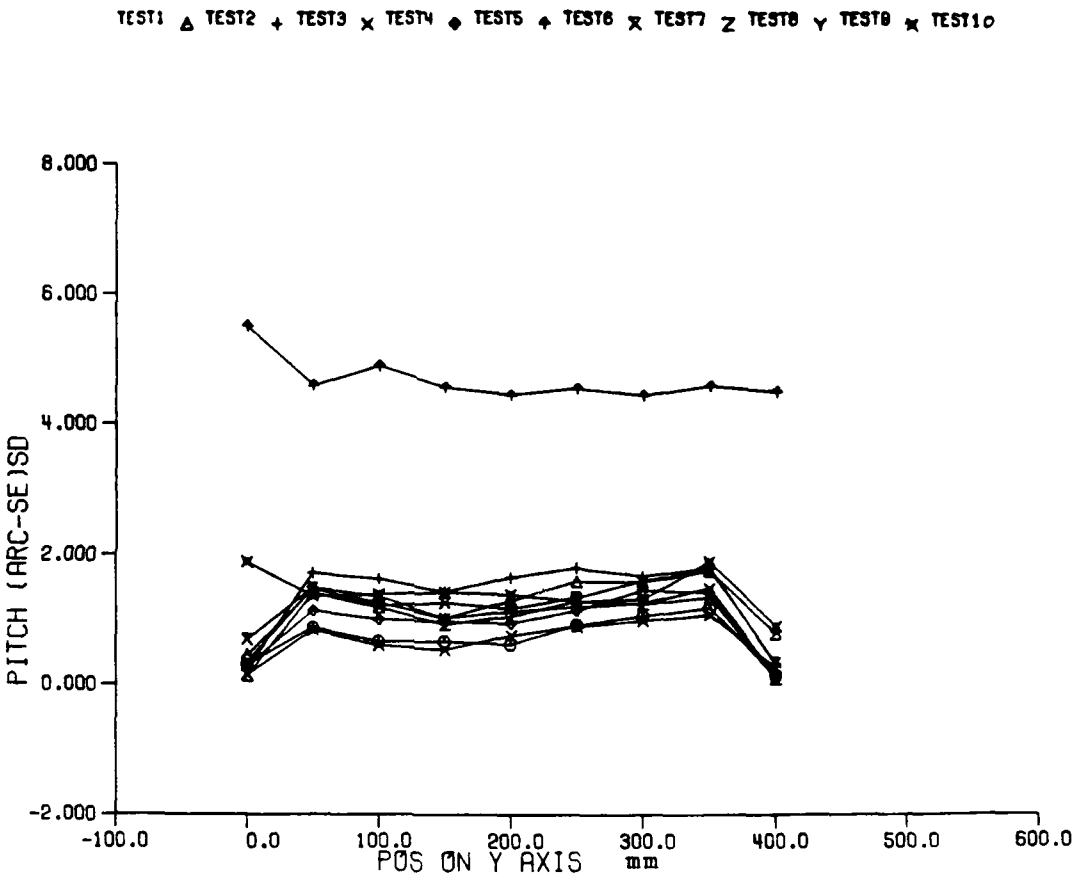
TEST1 TEST2 TEST3 TEST4 TEST5 TEST6 TEST7 TEST8 TEST9 TEST10
8.000
6.000
4.000
2.000
0.000
-2.000
PITCH (ARC-SEC)SD
-100.0
0.0
100.0
200.0
300.0
400.0
500.0
600.0
POS ON Y AXIS mm

Y axis

RESULTS OF PITCH ERROR (arc-sec)

X axis at 126.573 mms
Y axis at 140.000 mms
Z axis at 237.698 mms
Dir of laser F

Test # 1

POS	0.	50.	100.	150.	200.	250.
POS	300.	350.	400.			
TEMP	20.85	21.87	22.07	20.58	22.41	21.57
TEMP	21.70	19.89	19.84	18.87	18.55	18.45
TEMP	18.20	23.60	21.62	20.68	20.31	19.62
TEMP	19.25	34.61	21.10			
MEAN	0.26	0.35	-0.11	-0.58	-1.10	-1.39
MEAN	-2.05	-2.61	-2.51			
SD	0.12	0.35	0.26	0.26	0.24	0.36
SD	0.41	0.46	0.05			

Test # 2

POS	0.	50.	100.	150.	200.	250.
POS	300.	350.	400.			
TEMP	22.02	25.21	24.81	23.04	23.81	23.17
TEMP	23.04	21.86	21.41	20.82	20.00	20.05
TEMP	19.41	26.34	23.66	22.53	21.83	21.07
TEMP	20.55	35.66	46.30			
MEAN	0.35	0.54	-0.06	-0.83	-1.31	-1.85
MEAN	-2.51	-3.14	-2.89			
SD	0.18	0.58	0.50	0.40	0.51	0.63
SD	0.62	0.69	0.31			

Test # 3

POS	0.	50.	100.	150.	200.	250.
POS	300.	350.	400.			
TEMP	22.38	28.50	28.50	25.83	25.00	24.98
TEMP	24.63	23.57	23.33	22.61	21.87	21.40
TEMP	20.84	28.55	25.32	23.97	23.43	22.44
TEMP	21.90	36.92	46.80			
MEAN	-4.09	-4.04	-4.69	-5.61	-6.31	-7.01
MEAN	-7.72	-8.46	-8.15			
SD	0.09	0.68	0.64	0.56	0.65	0.71
SD	0.66	0.71	0.12			

Test # 4

POS	0.	50.	100	150.	200.	250.
POS	300.	350.	400			
TEMP	22.90	30.24	30.49	27.51	25.46	25.87
TEMP	25.65	24.67	24.52	23.71	23.05	22.18
TEMP	21.74	29.76	26.14	24.72	24.33	23.05
TEMP	22.68	37.41	37.30			
MEAN	1.26	0.93	0.24	-0.83	-1.74	-2.40
MEAN	-3.34	-4.25	-4.50			
SD	0.06	0.33	0.24	0.21	0.30	0.35
SD	0.38	0.42	0.10			

Test # 5

POS	0	50.	100	150	200	250
POS	300	350	400			
TEMP	22.95	32.30	32.76	28.87	25.94	26.87

TEMP	26.60	25.74	25.69	24.83	24.20	23.09
TEMP	22.62	30.77	26.92	25.50	25.25	23.73
TEMP	23.48	37.98	37.20			
MEAN	-0.20	-0.46	-1.52	-2.49	-3.55	-4.21
MEAN	-5.28	-6.25	-6.27			
SD	0.11	0.45	0.40	0.38	0.37	0.45
SD	0.57	0.56	0.05			

Test # 6

POS	0.	50.	100.	150.	200.	250.
POS	300.	350.	400.			
TEMP	23.00	33.28	33.38	29.42	26.20	27.67
TEMP	27.50	27.13	27.03	26.08	25.59	24.24
TEMP	23.84	30.76	27.74	26.37	26.30	24.65
TEMP	24.51	38.31	51.30			
MEAN	-9.34	-9.63	-10.77	-11.93	-12.97	-13.96
MEAN	-15.02	-16.22	-16.05			
SD	2.16	1.81	1.93	1.80	1.75	1.79
SD	1.75	1.80	1.77			

Test # 7

POS	0.	50.	100.	150.	200.	250.
POS	300.	350.	400.			
TEMP	22.65	30.38	32.10	29.14	26.18	27.99
TEMP	27.43	27.11	27.41	25.67	25.69	24.47
TEMP	24.20	29.55	27.70	26.53	26.70	24.98
TEMP	24.93	38.29	35.50			
MEAN	-0.83	-1.05	-2.08	-3.24	-4.42	-5.34
MEAN	-6.54	-7.72	-7.85			
SD	0.27	0.59	0.48	0.50	0.46	0.53
SD	0.63	0.69	0.13			

Test # 8

POS	0.	50.	100.	150.	200.	250.
POS	300.	350.	400.			
TEMP	22.96	33.59	34.63	31.31	25.80	28.27
TEMP	28.08	28.12	28.22	27.42	26.95	25.33
TEMP	24.92	31.99	28.47	27.22	26.98	25.90
TEMP	25.53	37.89	46.50			
MEAN	-13.83	-14.34	-15.58	-16.78	-17.96	-18.86
MEAN	-20.30	-21.24	-21.57			
SD	0.05	0.56	0.47	0.37	0.41	0.50
SD	0.49	0.53	0.03			

Test # 9

POS	0.	50.	100.	150.	200.	250.
POS	300.	350.	400.			
TEMP	22.78	33.58	35.51	31.62	25.50	28.68
TEMP	28.24	28.39	28.56	27.63	27.26	25.70
TEMP	25.18	32.11	28.70	27.51	27.19	26.11
TEMP	25.75	37.52	49.10			
MEAN	-16.60	-17.17	-18.48	-19.76	-20.95	-21.98
MEAN	-23.28	-24.36	-24.66			
SD	0.14	0.59	0.53	0.40	0.44	0.47
SD	0.49	0.58	0.05			

Test # 10

POS	0.	50.	100.	150.	200.	250.
POS	300.	350.	400.			
TEMP	22.70	32.08	33.54	30.44	25.37	28.30

TEMP	27.96	28.27	28.42	27.74	27.49	25.78
TEMP	25.32	30.59	28.45	27.30	27.08	26.17
TEMP	25.88	37.10	31.50			
MEAN	-6.15	-6.81	-8.16	-9.52	-10.74	-11.77
MEAN	-13.05	-14.23	-14.61			
SD	0.74	0.54	0.55	0.56	0.55	0.51
SD	0.52	0.74	0.35			

ACTUAL DATA

						SPREAD Up	SPREAD Down
Test # 1							
0.04	0.24	0.24	0.35	0.35	0.31	-0.05	0.05
0.43	-0.04	0.67	0.12	0.83	0.12	0.29	-0.29
0.04	-0.43	0.12	-0.28	0.20	-0.31	0.23	-0.23
-0.43	-0.91	-0.31	-0.71	-0.31	-0.83	0.23	-0.23
-0.91	-1.42	-0.87	-1.26	-0.87	-1.26	0.22	-0.22
-1.22	-1.81	-1.02	-1.61	-0.98	-1.69	0.31	-0.31
-1.77	-2.48	-1.61	-2.40	-1.65	-2.40	0.37	-0.37
-2.24	-3.03	-2.20	-3.07	-2.13	-2.99	0.42	-0.42
-2.56	-2.56	-2.52	-2.52	-2.44	-2.44	-0.00	-0.00
Test # 2							
0.28	0.55	0.55	0.31	0.31	0.08	0.03	-0.03
1.02	0.28	1.22	0.04	0.87	-0.20	0.50	-0.50
0.35	-0.24	0.43	-0.47	0.31	-0.75	0.43	-0.43
-0.47	-1.02	-0.43	-1.10	-0.55	-1.42	0.35	-0.35
-0.83	-1.50	-0.83	-1.69	-0.98	-2.05	0.43	-0.43
-1.14	-2.17	-1.22	-2.24	-1.61	-2.72	0.52	-0.52
-1.81	-2.68	-1.93	-3.11	-2.24	-3.31	0.52	-0.52
-2.40	-3.35	-2.48	-3.86	-2.80	-3.98	0.58	-0.58
-2.60	-2.60	-2.80	-2.80	-3.27	-3.27	0.	0.
Test # 3							
-4.06	-4.02	-4.02	-4.09	-4.09	-4.25	0.03	-0.03
-3.46	-4.53	-3.31	-4.65	-3.50	-4.76	0.61	-0.61
-4.25	-5.16	-3.94	-5.20	-4.17	-5.43	0.57	-0.57
-5.04	-5.98	-5.12	-6.10	-5.16	-6.26	0.51	-0.51
-5.75	-6.81	-5.71	-6.89	-5.71	-7.01	0.59	-0.59
-6.38	-7.52	-6.30	-7.44	-6.50	-7.95	0.62	-0.62
-7.13	-8.19	-7.01	-8.27	-7.24	-8.46	0.59	-0.59
-7.68	-9.02	-7.99	-9.09	-7.80	-9.17	0.64	-0.64
-8.07	-8.07	-8.07	-8.07	-8.31	-8.31	0.	0
Test # 4							
1.22	1.22	1.22	1.26	1.26	1.38	-0.03	0.03
1.22	0.63	1.26	0.63	1.22	0.63	0.30	-0.30
0.43	0.04	0.47	0.00	0.47	0.04	0.22	-0.22
-0.87	-0.91	-0.83	-1.06	-0.43	-0.91	0.12	-0.12
-1.42	-1.93	-1.61	-2.13	-1.42	-1.93	0.26	-0.26
-2.20	-2.83	-2.05	-2.68	-2.01	-2.60	0.31	-0.31
-2.91	-3.66	-3.03	-3.74	-3.03	-3.66	0.35	-0.35

-3.82	-4.61	-3.82	-4.69	-3.98	-4.61	0.38	-0.38
-4.57	-4.57	-4.57	-4.57	-4.37	-4.37	0.	0.
Test #	5						
-0.04	-0.16	-0.16	-0.31	-0.31	-0.24	0.03	-0.03
-0.12	-0.87	0.04	-0.87	-0.08	-0.87	0.41	-0.41
-1.30	-1.89	-0.98	-1.81	-1.22	-1.89	0.35	-0.35
-2.17	-2.80	-2.09	-2.83	-2.17	-2.87	0.35	-0.35
-3.19	-3.82	-3.19	-3.86	-3.27	-3.98	0.33	-0.33
-3.78	-4.65	-3.74	-4.57	-3.90	-4.65	0.41	-0.41
-4.69	-5.71	-4.76	-5.71	-4.84	-5.94	0.51	-0.51
-5.71	-6.73	-5.67	-6.77	-5.87	-6.77	0.51	-0.51
-6.22	-6.22	-6.34	-6.34	-6.26	-6.26	0.	0.
Test #	6						
-12.80	-10.20	-10.20	-8.07	-8.07	-6.73	-1.01	1.01
-12.17	-11.30	-9.61	-9.09	-7.99	-7.60	-0.30	0.30
-13.54	-12.32	-11.06	-10.16	-8.94	-8.62	-0.41	0.41
-14.33	-13.54	-12.24	-11.46	-10.08	-9.92	-0.29	0.29
-15.16	-14.76	-12.95	-12.83	-10.98	-11.14	-0.06	0.06
-16.02	-16.10	-13.66	-13.82	-12.01	-12.17	0.07	-0.07
-16.73	-17.24	-14.69	-15.16	-12.80	-13.50	0.28	-0.28
-17.99	-18.54	-15.55	-16.42	-13.82	-15.00	0.43	-0.43
-18.15	-18.15	-15.79	-15.79	-14.21	-14.21	0.00	0.00
Test #	7						
-1.34	-0.83	-0.83	-0.59	-0.59	-0.83	-0.09	0.09
-0.98	-1.65	-0.43	-1.42	-0.28	-1.54	0.49	-0.49
-2.20	-2.48	-1.50	-2.40	-1.46	-2.44	0.36	-0.36
-3.23	-3.74	-2.64	-3.58	-2.64	-3.62	0.41	-0.41
-4.13	-4.88	-3.90	-4.84	-3.98	-4.76	0.41	-0.41
-5.31	-5.75	-4.80	-5.79	-4.61	-5.79	0.43	-0.43
-5.98	-7.20	-5.98	-7.01	-5.94	-7.13	0.57	-0.57
-7.17	-8.43	-7.13	-8.31	-6.97	-8.31	0.63	-0.63
-7.95	-7.95	-7.91	-7.91	-7.68	-7.68	0.	0.
Test #	8						
-13.90	-13.82	-13.82	-13.78	-13.78	-13.90	0.	0.
-13.90	-14.69	-13.74	-14.92	-13.90	-14.92	0.50	-0.50
-15.39	-15.83	-15.04	-15.94	-15.12	-16.18	0.40	-0.40
-16.50	-16.97	-16.38	-17.09	-16.50	-17.24	0.32	-0.32
-17.56	-18.31	-17.56	-18.27	-17.64	-18.43	0.37	-0.37
-18.39	-19.33	-18.39	-19.25	-18.43	-19.37	0.46	-0.46
-19.76	-20.75	-19.96	-20.67	-19.84	-20.79	0.44	-0.44
-20.71	-21.69	-20.83	-21.69	-20.75	-21.77	0.48	-0.48
-21.57	-21.57	-21.54	-21.54	-21.61	-21.61	0.	0.
Test #	9						
-16.34	-16.61	-16.61	-16.65	-16.65	-16.73	0.07	-0.07
-16.46	-17.76	-16.69	-17.64	-16.77	-17.68	0.52	-0.52
-17.80	-19.13	-18.07	-18.74	-18.19	-18.94	0.46	-0.46
-19.25	-20.12	-19.41	-20.12	-19.53	-20.12	0.36	-0.36
-20.39	-21.30	-20.51	-21.34	-20.79	-21.38	0.39	-0.39
-21.42	-22.32	-21.57	-22.48	-21.69	-22.40	0.42	-0.42
-22.76	-23.66	-22.87	-23.82	-22.87	-23.70	0.45	-0.45
-23.86	-24.72	-23.82	-25.00	-23.82	-24.92	0.52	-0.52
-24.61	-24.61	-24.72	-24.72	-24.65	-24.65	0.	0.
Test #	10						
-7.32	-6.26	-6.26	-6.02	-6.02	-5.00	-0.39	0.39
-7.44	-7.36	-6.38	-7.05	-6.26	-6.38	0.12	-0.12
-8.78	-8.78	-7.80	-8.31	-7.52	-7.76	0.12	-0.12
-10.28	-10.08	-9.21	-9.57	-8.86	-9.13	0.07	-0.07
-11.46	-11.30	-10.28	-10.87	-10.28	-10.28	0.07	-0.07
-12.09	-12.44	-11.34	-11.97	-11.06	-11.69	0.27	-0.27
-13.15	-13.82	-12.56	-13.31	-12.40	-13.07	0.35	-0.35

-14.29	-15.28	-13.62	-14.69	-13.19	-14.33	0.53	-0.53
-15.00	-15.00	-14.61	-14.61	-14.21	-14.21	0.00	0.00

Regression Equation

$$-3.01*T3 + 3.88*T5 - 0.34e-3*T21*Y - 0.30*T21 + 8.99*T1 - 200.06$$

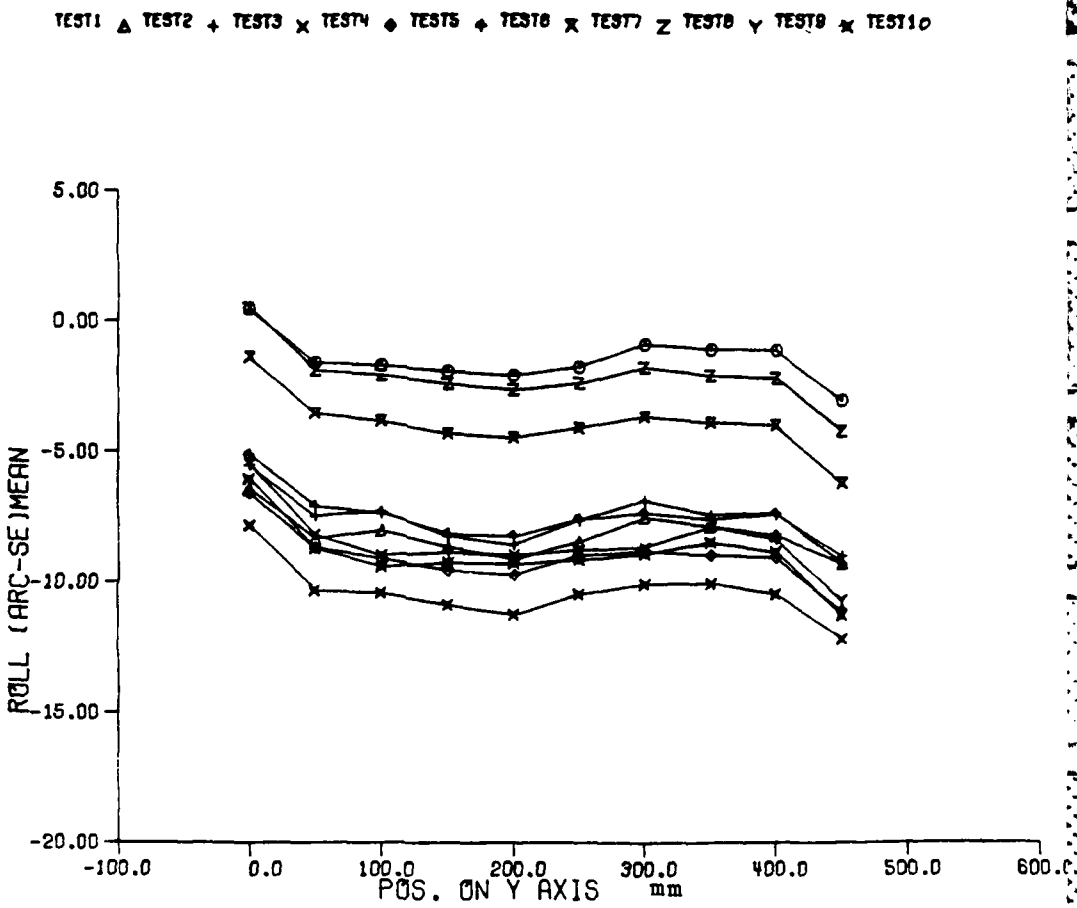
TEST1 TEST2 TEST3 TEST4 TEST5 TEST6 TEST7 TEST8 TEST9 TEST10
5.00
0.00
-5.00
-10.00
-15.00
-20.00
ROLL (ARC-SE)MEAN
-100.0
0.0
100.0
200.0
300.0
400.0
500.0
600.0
POS. ON Y AXIS mm

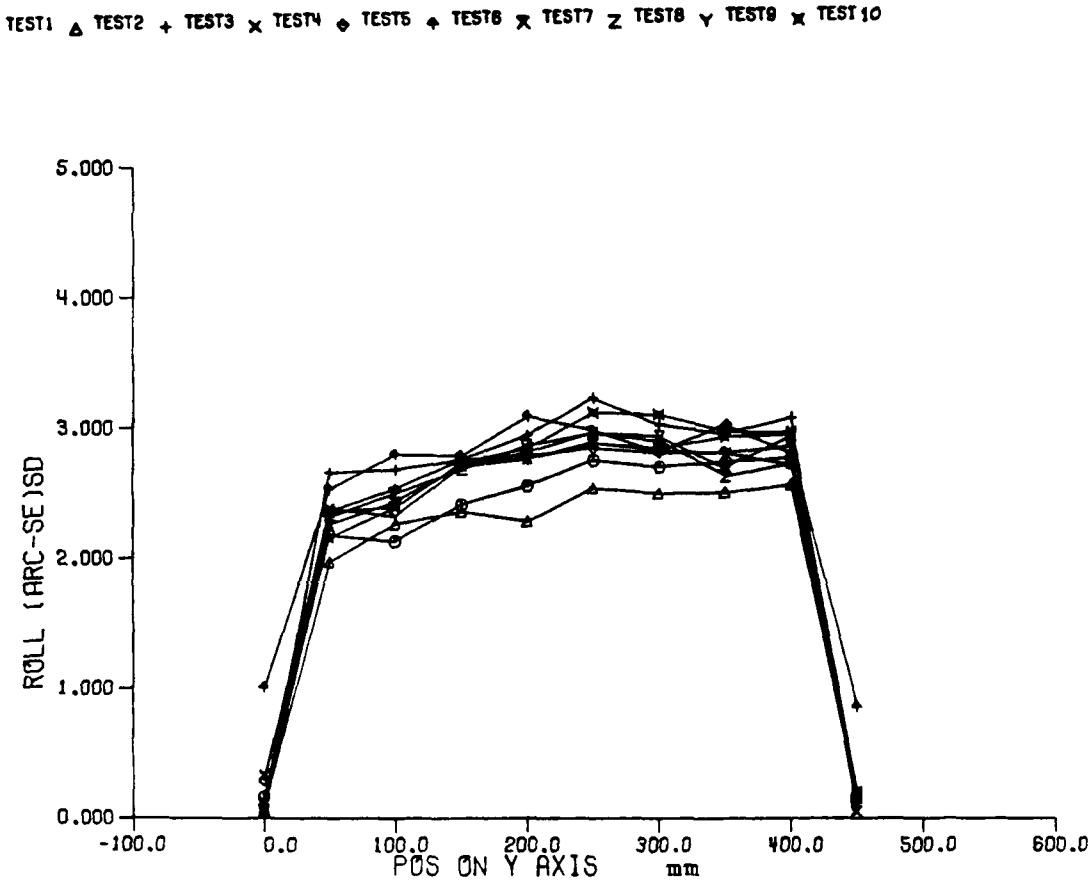
TEST1 TEST2 TEST3 TEST4 TEST5 TEST6 TEST7 TEST8 TEST9 TEST10
5.000
4.000
3.000
2.000
1.000
0.000
ROLL (ARC-SEC)SD
-100.0
0.0
100.0
200.0
300.0
400.0
500.0
600.0
POS ON Y AXIS mm

Y axis
RESULTS OF ROLL ERRORS (arc-sec)

X axis at 140.000 mms
Y axis at 140.000 mms
Z axis at 787.400 mms
Ref is + on right

Test # 1

POS	0.	50.	100.	150.	200.	250.
POS	300.	350.	400.	450.		
TEMP	24.90	25.74	25.91	24.85	26.42	25.52
TEMP	25.54	24.39	24.29	23.97	23.77	23.73
TEMP	23.70	27.23	25.42	24.91	24.71	24.37
TEMP	24.15	38.74	24.25			
MEAN	0.47	-1.58	-1.67	-1.90	-2.07	-1.75
MEAN	-0.87	-1.07	-1.10	-3.00		
SD	0.16	2.18	2.13	2.41	2.56	2.76
SD	2.71	2.74	2.78	0.15		

Test # 2

POS	0.	50.	100.	150.	200.	250.
POS	300.	350.	400.	450.		
TEMP	25.10	27.96	28.11	26.81	27.25	26.64
TEMP	26.81	25.54	25.39	24.65	24.43	24.24
TEMP	24.14	29.77	26.81	25.91	25.66	25.10
TEMP	24.80	39.33	38.97			
MEAN	-6.45	-8.33	-8.03	-8.65	-9.12	-8.45
MEAN	-7.52	-7.88	-8.22	-9.30		
SD	0.08	1.97	2.27	2.36	2.29	2.54
SD	2.51	2.51	2.58	0.15		

Test # 3

POS	0.	50.	100.	150.	200.	250.
POS	300.	350.	400.	450		
TEMP	25.45	30.27	30.56	28.66	27.80	27.75
TEMP	27.68	26.53	26.46	25.72	25.33	24.89
TEMP	24.67	31.36	28.00	26.83	26.56	25.75
TEMP	25.48	39.85	41.82			
MEAN	-5.52	-7.48	-7.30	-8.22	-8.58	-7.65
MEAN	-6.87	-7.43	-7.38	-9.00		
SD	0.13	2.66	2.68	2.76	2.94	3.23
SD	3.03	2.96	3.09	0.09		

Test # 4

POS	0.	50.	100.	150.	200.	250.
POS	300.	350.	400.	450.		
TEMP	25.90	33.57	33.93	30.76	28.45	29.03
TEMP	28.76	27.98	27.76	27.27	26.49	25.90
TEMP	25.46	32.89	29.37	28.03	27.59	26.64
TEMP	26.25	40.43	50.69			
MEAN	-7.83	-10.33	-10.42	-10.87	-11.25	-10.47
MEAN	-10.07	-10.05	-10.47	-12.17		
SD	0.33	2.16	2.40	2.74	2.77	2.89
SD	2.85	2.94	2.96	0.05		

Test # 5

POS	0	50	100	150	200	250
POS	300	350	400	450		
TEMP	26.38	35.32	36.09	32.26	28.86	30.10

TEMP	25.95	31.73	27.76	26.95	27.32	26.46
TEMP	26.59	36.86	66.50			
MEAN	17.64	19.36	19.15	18.90	18.56	17.78
MEAN	16.46	16.12	18.67			
SD	0.50	2.02	2.29	2.48	2.73	2.75
SD	3.02	2.93	0.69			

Test # 6

POS	0.	50.	100.	150.	200.	250.
POS	300.	350.	400.			
TEMP	23.63	31.84	33.77	31.52	25.03	28.04
TEMP	28.12	27.97	28.48	27.68	27.60	26.11
TEMP	26.11	31.96	27.90	27.06	27.50	26.48
TEMP	26.70	36.75	54.00			
MEAN	10.81	13.01	12.91	12.76	11.87	11.37
MEAN	10.47	9.90	12.11			
SD	0.24	2.80	2.91	3.17	3.26	3.43
SD	3.33	3.31	0.11			

Test # 7

POS	0.	50.	100.	150.	200.	250.
POS	300.	350.	400.			
TEMP	23.30	32.57	33.82	32.01	24.89	27.93
TEMP	28.14	28.05	28.83	28.10	28.12	26.31
TEMP	26.36	31.99	27.93	27.07	27.51	26.51
TEMP	26.80	36.90	55.40			
MEAN	10.87	13.39	13.08	12.82	12.28	11.83
MEAN	10.66	10.15	12.73			
SD	0.23	2.40	2.61	2.88	2.85	2.98
SD	3.13	2.92	0.11			

Test # 8

POS	0.	50.	100.	150.	200.	250.
POS	300.	350.	400.			
TEMP	23.00	32.50	33.78	32.26	24.36	27.76
TEMP	27.98	28.10	28.96	28.20	28.25	26.30
TEMP	26.35	31.73	27.71	26.93	27.47	26.44
TEMP	26.71	36.17	53.80			
MEAN	9.62	11.94	11.71	11.73	11.01	10.29
MEAN	9.47	8.59	11.48			
SD	0.19	2.76	2.84	2.95	2.95	3.12
SD	3.28	3.14	0.43			

Test # 9

POS	0.	50.	100.	150.	200.	250.
POS	300.	350.	400.			
TEMP	22.85	28.87	31.16	30.55	23.83	27.38
TEMP	27.48	27.60	28.68	27.55	28.14	25.91
TEMP	26.21	29.29	27.09	26.38	27.02	26.06
TEMP	26.45	35.70	54.10			
MEAN	7.86	10.05	9.77	9.91	9.18	8.31
MEAN	7.53	6.65	9.28			
SD	0.12	2.62	2.62	2.82	2.85	3.13
SD	3.01	2.98	0.04			

Test # 10

POS	0.	50.	100.	150.	200.	250.
POS	300.	350.	400.			
TEMP	22.33	31.47	33.35	32.05	23.52	27.23
TEMP	27.42	27.57	28.57	27.82	27.96	25.81

TEMP	32.03	32.30	32.52	31.52	31.18	29.46
TEMP	28.92	35.63	32.13	31.06	30.99	29.77
TEMP	29.46	41.20	58.25			
MEAN	-6.05	-8.72	-9.42	-9.25	-9.30	-9.15
MEAN	-8.93	-8.48	-8.88	-11.27		
SD	0.12	2.36	2.40	2.74	2.85	3.12
SD	3.11	2.98	2.98	0.21		

ACTUAL DATA

						SPREAD Up	SPREAD Down
Test # 1							
0.80	0.40	0.40	0.40	0.40	0.40	0.07	-0.07
-3.80	0.40	-3.50	0.60	-3.40	0.20	-1.98	1.98
-3.90	0.20	-3.70	0.20	-3.20	0.40	-1.93	1.93
-4.20	0.10	-4.10	0.40	-4.00	0.40	-2.20	2.20
-4.40	0.20	-4.40	0.20	-4.40	0.40	-2.33	2.33
-4.40	0.70	-4.20	0.90	-4.20	0.70	-2.52	2.52
-3.40	1.90	-3.20	1.50	-3.40	1.40	-2.47	2.47
-3.70	1.30	-3.30	1.60	-3.70	1.40	-2.50	2.50
-3.90	1.40	-3.40	1.40	-3.60	1.50	-2.53	2.53
-2.90	-2.90	-2.90	-2.90	-3.20	-3.20	0.00	0.00
Test # 2							
-6.30	-6.50	-6.50	-6.50	-6.50	-6.40	0.02	-0.02
-10.20	-6.70	-10.10	-6.50	-10.10	-6.40	-1.80	1.80
-10.00	-6.00	-10.20	-5.90	-10.10	-6.00	-2.07	2.07
-10.80	-6.80	-10.80	-6.30	-10.80	-6.40	-2.15	2.15
-11.10	-7.10	-11.10	-7.20	-11.40	-6.80	-2.08	2.08
-10.80	-6.40	-10.80	-6.10	-10.70	-5.90	-2.32	2.32
-9.80	-5.50	-9.80	-5.10	-9.80	-5.10	-2.28	2.28
-10.10	-5.80	-10.30	-5.80	-10.10	-5.20	-2.28	2.28
-10.50	-5.90	-10.50	-5.80	-10.70	-5.90	-2.35	2.35
-9.10	-9.10	-9.40	-9.40	-9.40	-9.40	0.	0
Test # 3							
-5.70	-5.60	-5.60	-5.40	-5.40	-5.40	-0.05	0.05
-10.20	-5.20	-9.80	-5.20	-9.70	-4.80	-2.42	2.42
-10.20	-5.10	-9.60	-4.70	-9.40	-4.80	-2.43	2.43
-10.90	-5.80	-10.60	-5.60	-10.70	-5.70	-2.52	2.52
-11.10	-6.10	-11.30	-5.90	-11.40	-5.70	-2.68	2.68
-10.40	-4.70	-10.80	-4.70	-10.60	-4.70	-2.95	2.95
-9.70	-4.20	-9.70	-4.10	-9.50	-4.00	-2.77	2.77
-10.00	-4.90	-10.10	-4.70	-10.30	-4.60	-2.70	2.70
-10.20	-4.80	-10.20	-4.50	-10.20	-4.40	-2.82	2.82
-9.10	-9.10	-9.00	-9.00	-8.90	-8.90	0.00	0.00
Test # 4							
-8.40	-7.90	-7.90	-7.70	-7.70	-7.40	-0.17	0.17
-12.50	-8.50	-12.30	-8.40	-12.10	-8.20	-1.97	1.97
-12.70	-8.30	-12.40	-8.30	-12.70	-8.10	-2.18	2.18
-13.50	-8.30	-13.30	-8.40	-13.30	-8.40	-2.50	2.50
-13.90	-8.40	-13.90	-8.90	-13.50	-8.90	-2.52	2.52
-13.10	-7.90	-13.30	-7.80	-12.90	-7.80	-2.63	2.63
-12.80	-7.60	-12.80	-7.40	-12.40	-7.40	-2.60	2.60
-12.70	-7.20	-12.80	-7.40	-12.70	-7.50	-2.68	2.68
-13.30	-7.90	-13.20	-7.90	-13.00	-7.50	-2.70	2.70
-12.20	-12.20	-12.20	-12.20	-12.10	-12.10	0.	0
Test # 5							
-6.70	-6.90	-6.90	-6.40	-6.40	-6.20	-0.08	0.08

AD-A163 598 THE SCIENCE OF AND ADVANCED TECHNOLOGY FOR COST-EFFECTIVE MANUFACTURE OF..(U) PURDUE UNIV LAFAYETTE IN SCHOOL OF INDUSTRIAL ENGINEERING 4/4

UNCLASSIFIED R VENUGOPAL ET AL. OCT 85 N00014-83-K-0385 F/G 13/9 NL

END

FILMED

DTIC

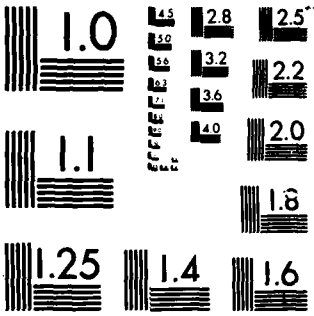

MICROCOPY RESOLUTION TEST CHART
NATIONAL BUREAU OF STANDARDS-1963-A

-10.90	-6.70	-10.80	-6.40	-10.80	-6.50	-2.15	2.15
-11.40	-7.20	-11.40	-6.80	-11.40	-6.40	-2.30	2.30
-12.20	-7.20	-12.00	-7.00	-12.00	-6.90	-2.52	2.52
-12.40	-7.50	-12.50	-7.20	-11.90	-6.90	-2.53	2.53
-11.60	-6.30	-11.50	-6.50	-11.70	-6.40	-2.60	2.60
-11.40	-6.50	-11.40	-6.20	-11.40	-6.10	-2.57	2.57
-11.90	-6.30	-11.70	-6.20	-11.60	-6.10	-2.77	2.77
-11.70	-6.60	-11.50	-6.40	-11.70	-6.50	-2.57	2.57
-11.20	-11.20	-11.20	-11.20	-10.90	-10.90	0.	0
Test #	6						
-6.60	-5.70	-5.70	-4.30	-4.30	-4.20	-0.40	0.40
-10.20	-6.00	-9.40	-4.70	-8.20	-4.10	-2.17	2.17
-10.80	-5.90	-9.80	-4.80	-8.80	-4.10	-2.43	2.43
-11.40	-6.60	-10.80	-5.40	-9.60	-5.10	-2.45	2.45
-11.80	-6.30	-11.10	-5.00	-10.10	-5.20	-2.75	2.75
-11.10	-5.90	-10.20	-4.80	-9.40	-4.20	-2.63	2.63
-10.80	-5.80	-9.80	-4.90	-8.80	-4.00	-2.45	2.45
-11.10	-6.20	-10.00	-5.10	-9.00	-4.20	-2.43	2.43
-10.90	-5.90	-9.70	-4.90	-9.10	-3.90	-2.50	2.50
-10.30	-10.30	-9.10	-9.10	-8.40	-8.40	0.	0.
Test #	7						
-1.40	-1.40	-1.40	-1.30	-1.30	-1.40	0.	0.
-5.40	-0.90	-5.40	-1.80	-5.90	-1.80	-2.03	2.03
-6.10	-1.40	-6.10	-1.60	-5.90	-1.80	-2.22	2.22
-6.90	-1.60	-6.50	-2.00	-6.90	-1.90	-2.47	2.47
-7.20	-1.80	-6.90	-2.00	-7.00	-1.90	-2.57	2.57
-6.90	-1.20	-6.80	-1.20	-6.70	-1.80	-2.70	2.70
-6.40	-0.90	-6.10	-1.00	-6.50	-1.00	-2.68	2.68
-6.40	-1.00	-6.20	-1.90	-6.40	-1.40	-2.45	2.45
-6.40	-1.40	-6.80	-1.20	-6.80	-1.30	-2.68	2.68
-6.00	-6.00	-6.40	-6.40	-6.20	-6.20	0.	0.
Test #	8						
0.60	0.50	0.50	0.50	0.50	0.40	0.03	-0.03
-3.90	0.20	-4.00	0.20	-4.10	0.30	-2.12	2.12
-4.40	0.30	-4.30	0.20	-4.30	0.20	-2.28	2.28
-4.80	0.	-4.70	0.	-5.00	0.20	-2.45	2.45
-5.10	0.	-5.10	0.	-5.50	0.	-2.62	2.62
-5.10	0.50	-5.10	0.50	-5.00	0.	-2.70	2.70
-4.30	0.90	-4.40	0.90	-4.50	0.90	-2.65	2.65
-4.30	0.50	-4.70	0.50	-4.40	0.	-2.40	2.40
-4.50	0.50	-4.80	0.30	-4.70	0.20	-2.50	2.50
-4.00	-4.00	-4.30	-4.30	-4.30	-4.30	0.	0.
Test #	9						
-5.40	-5.50	-5.50	-5.50	-5.50	-5.20	-0.03	0.03
-9.90	-5.90	-10.90	-5.90	-10.20	-6.30	-2.15	2.15
-10.90	-6.80	-11.20	-7.00	-11.20	-6.80	-2.12	2.12
-11.40	-6.40	-11.40	-6.40	-11.20	-6.40	-2.47	2.47
-11.50	-6.50	-11.50	-6.20	-11.50	-6.70	-2.52	2.52
-11.50	-5.90	-11.40	-6.40	-11.40	-6.20	-2.63	2.63
-11.40	-5.90	-11.20	-6.20	-11.20	-6.20	-2.58	2.58
-10.40	-5.30	-10.50	-5.20	-10.50	-5.50	-2.57	2.57
-10.80	-5.70	-10.90	-5.80	-10.80	-6.10	-2.48	2.48
-10.50	-10.50	-10.90	-10.90	-10.70	-10.70	0.	0
Test #	10						
-5.90	-6.20	-6.20	-6.00	-6.00	-6.00	0.02	-0.02
-10.90	-6.40	-10.90	-6.60	-10.80	-6.70	-2.15	2.15
-11.50	-7.20	-11.50	-7.40	-11.80	-7.10	-2.18	2.18
-12.00	-6.80	-12.00	-6.70	-11.20	-6.80	-2.48	2.48
-11.90	-6.80	-11.90	-6.80	-11.90	-6.50	-2.60	2.60
-12.10	-6.10	-11.90	-6.40	-12.00	-6.40	-2.85	2.85

-12.00	-6.10	-11.50	-6.00	-11.80	-6.20	-2.83	2.83
-11.20	-5.90	-11.20	-5.50	-11.20	-5.90	-2.72	2.72
-11.70	-6.20	-11.50	-6.20	-11.60	-6.10	-2.72	2.72
-11.40	-11.40	-11.40	-11.40	-11.00	-11.00	0.00	0.00

Regression Equation

T21*-0.43 + T10*1.10 - 0.13e-3*T3*Y - 17.17

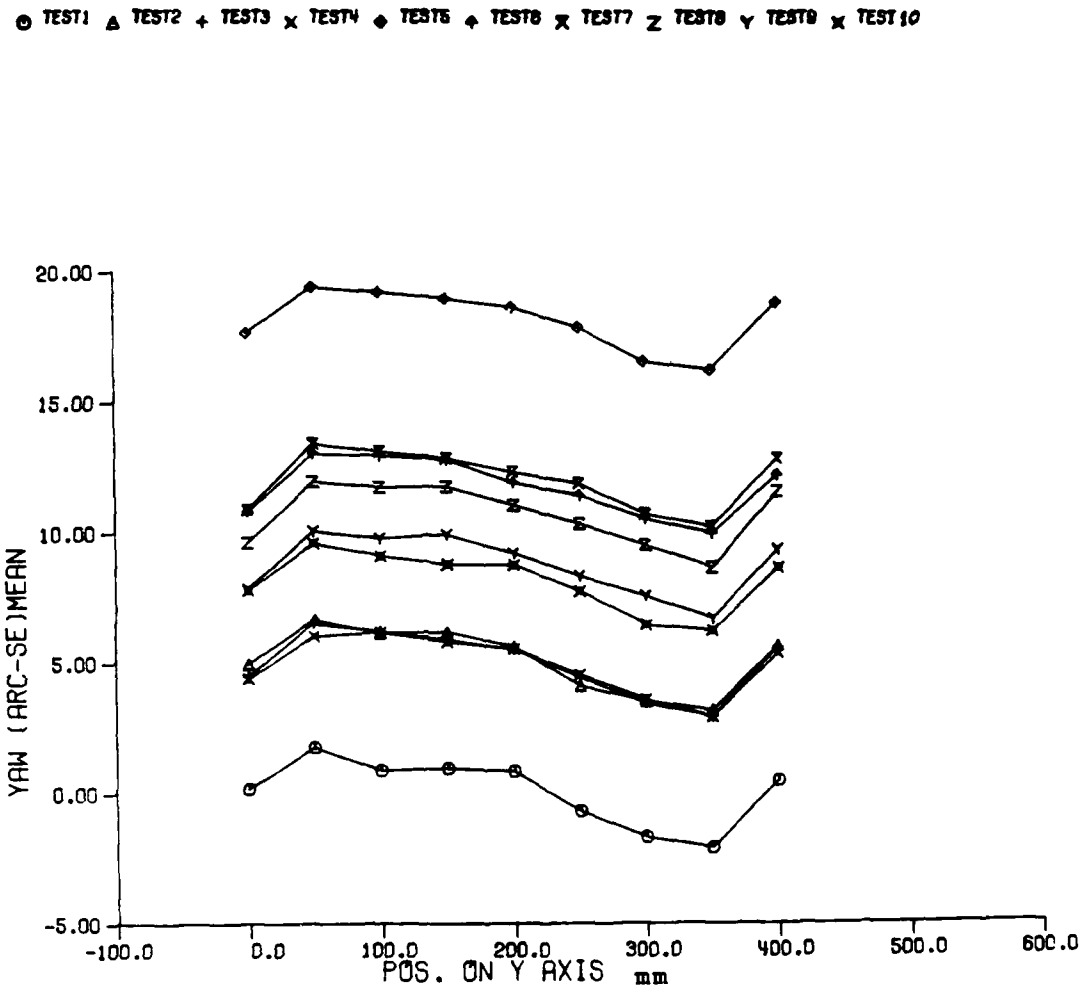
TEST1 TEST2 TEST3 TEST4 TEST5 TEST6 TEST7 TEST8 TEST9 TEST10
20.00
15.00
10.00
5.00
0.00
-5.00
YAW (ARC-SE)MEAN
-100.0
0.0
100.0
200.0
300.0
400.0
500.0
600.0
POS. ON Y AXIS mm

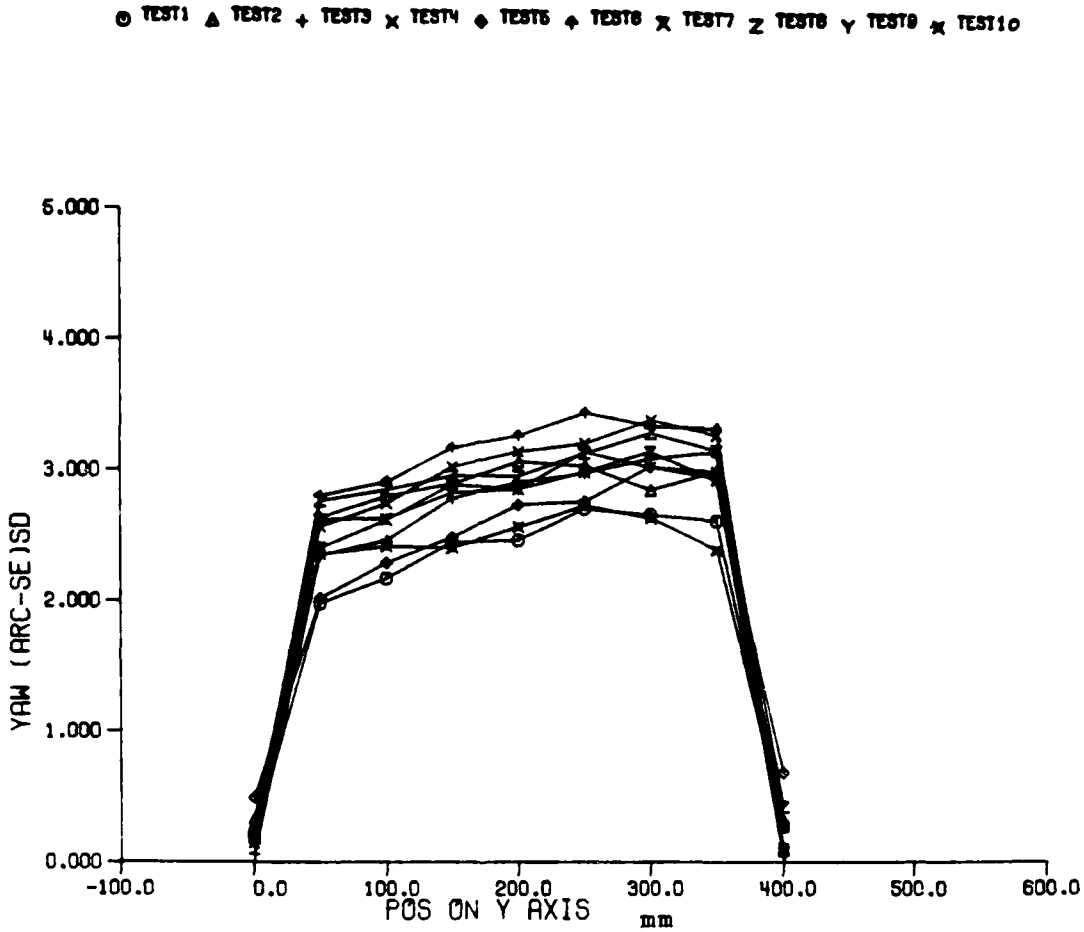
TEST1 TEST2 TEST3 TEST4 TEST5 TEST6 TEST7 TEST8 TEST9 TEST10
5.000
4.000
3.000
2.000
1.000
0.000
YAW (ARC-SEISD)
-100.0
0.0
100.0
200.0
300.0
400.0
500.0
600.0
POS ON Y AXIS
mm

Y axis
RESULTS OF YAW ERROR (arc-sec)

X axis at 140.000 mms
Y axis at 140.000 mms
Z axis at 330.000 mms Dir of laser F

Test # 1

POS	0.	50.	100.	150.	200.	250.
POS	300.	350.	400.			
TEMP	23.88	25.71	26.47	27.14	25.22	25.91
TEMP	26.26	26.08	26.21	25.72	25.96	25.32
TEMP	25.50	28.53	26.21	25.67	26.01	25.74
TEMP	25.87	36.92	29.10			
MEAN	0.16	1.75	0.86	0.94	0.83	-0.71
MEAN	-1.71	-2.11	0.45			
SD	0.20	1.98	2.17	2.44	2.46	2.70
SD	2.65	2.61	0.27			

Test # 2

POS	0.	50.	100.	150.	200.	250.
POS	300.	350.	400.			
TEMP	24.08	27.13	28.47	28.30	25.29	26.69
TEMP	26.88	26.37	26.76	26.00	26.13	25.37
TEMP	25.46	29.81	26.76	26.05	26.47	25.95
TEMP	26.08	37.01	36.20			
MEAN	4.96	6.66	6.14	6.17	5.60	4.07
MEAN	3.48	3.12	5.98			
SD	0.34	2.64	2.79	2.89	3.06	3.03
SD	2.84	2.99	0.33			

Test # 3

POS	0.	50.	100.	150.	200.	250.
POS	300	350.	400.			
TEMP	24.20	28.25	29.61	29.10	25.31	27.02
TEMP	27.20	26.73	27.15	26.36	26.39	25.48
TEMP	25.55	30.75	27.07	26.36	26.76	26.10
TEMP	26.22	37.07	36.80			
MEAN	4.48	6.52	6.21	5.87	5.49	4.42
MEAN	3.41	2.89	5.52			
SD	0.06	2.35	2.46	2.78	2.90	2.97
SD	3.08	3.13	0.08			

Test # 4

POS	0.	50.	100.	150.	200.	250.
POS	300.	350.	400.			
TEMP	24.33	30.03	31.64	30.20	25.17	27.52
TEMP	27.69	27.30	27.79	26.96	26.91	25.78
TEMP	25.76	31.39	27.57	26.76	27.21	26.32
TEMP	26.45	36.92	38.40			
MEAN	4.39	6.03	6.17	5.79	5.50	4.51
MEAN	3.55	2.87	5.30			
SD	0.15	2.57	2.74	3.02	3.13	3.20
SD	3.37	3.26	0.09			

Test # 5

POS	0	50	100	150	200	250
POS	300	350.	400			
TEMP	23.68	31.22	32.29	30.81	25.19	27.54
TEMP	27.79	27.57	28.10	27.42	27.27	25.97

TEMP	25.95	31.73	27.76	26.95	27.32	26.46
TEMP	26.59	36.86	66.50			
MEAN	17.64	19.36	19.15	18.90	18.56	17.78
MEAN	16.46	16.12	18.67			
SD	0.50	2.02	2.29	2.48	2.73	2.75
SD	3.02	2.93	0.69			

Test # 6

POS	0.	50.	100.	150.	200.	250.
POS	300.	350.	400.			
TEMP	23.63	31.84	33.77	31.52	25.03	28.04
TEMP	28.12	27.97	28.48	27.68	27.60	26.11
TEMP	26.11	31.96	27.90	27.06	27.50	26.48
TEMP	26.70	36.75	54.00			
MEAN	10.81	13.01	12.91	12.76	11.87	11.37
MEAN	10.47	9.90	12.11			
SD	0.24	2.80	2.91	3.17	3.26	3.43
SD	3.33	3.31	0.11			

Test # 7

POS	0.	50.	100.	150.	200.	250.
POS	300.	350.	400.			
TEMP	23.30	32.57	33.82	32.01	24.89	27.93
TEMP	28.14	28.05	28.83	28.10	28.12	26.31
TEMP	26.36	31.99	27.93	27.07	27.51	26.51
TEMP	26.80	36.90	55.40			
MEAN	10.87	13.39	13.08	12.82	12.28	11.83
MEAN	10.66	10.15	12.73			
SD	0.23	2.40	2.61	2.88	2.85	2.98
SD	3.13	2.92	0.11			

Test # 8

POS	0.	50.	100.	150.	200.	250.
POS	300.	350.	400.			
TEMP	23.00	32.50	33.78	32.26	24.36	27.76
TEMP	27.98	28.10	28.96	28.20	28.25	26.30
TEMP	26.35	31.73	27.71	26.93	27.47	26.44
TEMP	26.71	36.17	53.80			
MEAN	9.62	11.94	11.71	11.73	11.01	10.29
MEAN	9.47	8.59	11.48			
SD	0.19	2.76	2.84	2.95	2.95	3.12
SD	3.28	3.14	0.43			

Test # 9

POS	0.	50.	100.	150.	200.	250.
POS	300.	350.	400.			
TEMP	22.85	28.87	31.16	30.55	23.83	27.38
TEMP	27.48	27.60	28.68	27.55	28.14	25.91
TEMP	26.21	29.29	27.09	26.38	27.02	26.06
TEMP	26.45	35.70	54.10			
MEAN	7.86	10.05	9.77	9.91	9.18	8.31
MEAN	7.53	6.65	9.28			
SD	0.12	2.62	2.62	2.82	2.85	3.13
SD	3.01	2.98	0.04			

Test # 10

POS	0.	50.	100.	150.	200.	250
POS	300.	350.	400			
TEMP	22.33	31.47	33.35	32.05	23.52	27.23
TEMP	27.42	27.57	28.57	27.82	27.96	25.81

TEMP	25.93	31.13	27.03	26.25	26.89	25.81
TEMP	26.25	35.40	53.00			
MEAN	7.80	9.59	9.09	8.76	8.73	7.72
MEAN	6.41	6.18	8.58			
SD	0.22	2.35	2.41	2.40	2.56	2.72
SD	2.63	2.39	0.28			

ACTUAL DATA

						SPREAD Up	SPREAD Down
Test # 1							
-0.12	0.04	0.04	0.28	0.28	0.43	-0.09	0.09
3.35	-0.24	3.46	0.	3.82	0.08	1.80	-1.80
2.72	-1.30	2.83	-1.06	2.95	-0.98	1.98	-1.98
2.91	-1.42	3.31	-1.22	3.27	-1.22	2.22	-2.22
2.91	-1.65	3.11	-1.38	3.19	-1.18	2.24	-2.24
1.38	-3.35	1.89	-3.15	1.97	-2.99	2.45	-2.45
0.59	-4.33	0.79	-4.21	0.75	-3.82	2.41	-2.41
-0.28	-4.61	0.39	-4.45	0.63	-4.37	2.36	-2.36
0.20	0.20	0.35	0.35	0.79	0.79	0.	0.
Test # 2							
5.55	4.84	4.84	5.00	5.00	4.53	0.17	-0.17
9.09	4.37	8.94	4.61	9.13	3.82	2.40	-2.40
8.78	3.66	8.62	3.82	8.66	3.31	2.55	-2.55
8.70	3.62	8.86	3.82	8.86	3.19	2.63	-2.63
8.27	2.99	8.39	3.07	8.50	2.40	2.78	-2.78
7.01	1.42	7.17	1.73	6.26	0.87	2.74	-2.74
6.22	1.06	6.26	1.14	5.71	0.51	2.58	-2.58
5.98	0.55	5.94	0.75	5.55	-0.08	2.71	-2.71
5.79	5.79	5.79	5.79	5.16	5.16	0.	0.
Test # 3							
4.57	4.49	4.49	4.41	4.41	4.53	0.01	-0.01
8.78	4.33	8.66	4.33	8.54	4.49	2.14	-2.14
8.58	3.94	8.43	3.98	8.35	3.98	2.24	-2.24
8.39	3.19	8.43	3.43	8.39	3.39	2.53	-2.53
8.23	2.87	8.15	2.80	8.03	2.87	2.64	-2.64
7.13	1.89	7.13	1.58	7.13	1.65	2.71	-2.71
6.18	0.87	6.22	0.39	6.26	0.55	2.81	-2.81
5.71	0.	5.83	0.	5.71	0.12	2.85	-2.85
5.47	5.47	5.63	5.63	5.47	5.47	0.00	0.00
Test # 4							
4.69	4.37	4.37	4.29	4.29	4.33	0.06	-0.06
8.39	3.70	8.35	3.74	8.39	3.62	2.34	-2.34
8.74	3.74	8.74	3.70	8.54	3.58	2.50	-2.50
8.54	2.95	8.54	3.07	8.54	3.07	2.76	-2.76
8.46	2.64	8.39	2.64	8.23	2.64	2.86	-2.86
7.44	1.57	7.44	1.61	7.40	1.57	2.92	-2.92
6.85	0.55	6.54	0.39	6.50	0.47	3.08	-3.08
5.71	-0.31	5.75	0.	6.06	0.	2.97	-2.97
5.39	5.39	5.20	5.20	5.31	5.31	0.	0
Test # 5							
16.93	17.36	17.36	18.03	18.03	18.15	-0.20	0.20
20.71	17.01	21.06	17.76	21.69	17.91	1.80	-1.80
20.71	16.65	21.22	17.13	21.69	17.52	2.05	-2.05
20.63	16.26	20.98	16.77	21.77	16.97	2.23	-2.23
20.35	15.55	21.46	16.22	21.22	16.57	2.45	-2.45
19.80	14.88	20.16	15.24	20.83	15.79	2.48	-2.48
18.86	13.43	19.17	13.82	19.57	13.90	2.74	-2.74

18.23	13.07	18.70	13.19	19.33	14.21	2.63	-2.63
18.03	18.03	18.46	18.46	19.53	19.53	0.00	0.00
Test # 6							
11.30	10.71	10.71	10.71	10.71	10.75	0.09	-0.09
15.71	10.47	15.59	10.39	15.39	10.51	2.55	-2.55
15.55	10.35	15.55	10.31	15.59	10.12	2.65	-2.65
15.83	9.88	15.51	9.96	15.59	9.76	2.89	-2.89
14.92	8.90	14.80	8.82	14.80	8.98	2.97	-2.97
14.61	8.23	14.29	8.11	14.61	8.39	3.13	-3.13
13.54	7.40	13.43	7.52	13.54	7.36	3.04	-3.04
12.91	6.93	12.91	6.97	12.91	6.73	3.02	-3.02
12.01	12.01	12.24	12.24	12.09	12.09	0.	0.
Test # 7							
11.33	10.81	10.81	10.74	10.74	10.81	0.09	-0.09
15.78	11.17	15.58	10.97	15.38	11.48	2.19	-2.19
15.50	10.81	15.46	10.50	15.42	10.78	2.38	-2.38
15.70	10.34	15.11	10.03	15.54	10.22	2.62	-2.62
15.11	9.87	14.67	9.48	14.83	9.71	2.59	-2.59
14.67	9.32	14.40	8.93	14.56	9.08	2.72	-2.72
13.65	7.98	13.49	7.55	13.41	7.90	2.85	-2.85
12.74	7.55	12.78	7.74	12.90	7.19	2.66	-2.66
12.70	12.70	12.63	12.63	12.86	12.86	0.	0.
Test # 8							
9.87	9.40	9.40	9.67	9.67	9.71	0.03	-0.03
14.52	9.16	14.44	9.32	14.40	9.79	2.51	-2.51
14.28	8.93	14.32	9.28	14.32	9.16	2.59	-2.59
14.44	8.77	14.32	9.12	14.52	9.24	2.69	-2.69
13.85	8.22	13.65	8.37	13.61	8.37	2.69	-2.69
12.98	7.23	13.22	7.55	13.22	7.55	2.85	-2.85
12.47	6.48	12.23	6.68	12.67	6.29	2.99	-2.99
11.41	5.58	11.52	5.85	11.44	5.74	2.87	-2.87
11.25	11.25	12.04	12.04	11.17	11.17	-0.00	-0.00
Test # 9							
7.94	7.74	7.74	7.98	7.98	7.74	0.03	-0.03
12.39	7.74	12.39	7.70	12.55	7.55	2.39	-2.39
12.35	7.27	11.92	7.63	12.19	7.23	2.39	-2.39
12.55	7.27	12.47	7.51	12.43	7.23	2.57	-2.57
11.60	6.48	11.68	6.80	12.04	6.48	2.59	-2.59
10.97	5.42	11.09	5.66	11.44	5.30	2.85	-2.85
10.30	4.75	10.26	4.95	10.26	4.63	2.75	-2.75
9.48	4.00	9.24	4.08	9.40	3.73	2.72	-2.72
9.28	9.28	9.32	9.32	9.24	9.24	0.	0.
Test # 10							
7.98	8.02	8.02	7.59	7.59	7.63	0.06	-0.06
11.68	7.63	11.88	7.43	11.64	7.27	2.15	-2.15
11.17	6.96	11.60	6.92	11.09	6.80	2.20	-2.20
10.85	6.72	11.25	6.56	10.74	6.44	2.19	-2.19
11.17	7.07	11.25	6.37	10.70	5.85	2.30	-2.30
10.22	5.34	10.38	5.30	9.99	5.07	2.48	-2.48
8.85	4.12	9.24	4.04	8.30	3.93	2.38	-2.38
8.22	4.12	8.81	4.12	8.02	3.81	2.17	-2.17
8.61	8.61	8.89	8.89	8.26	8.26	0.	0.

Regression Equation

0.47*T21 + 2.4*T5 - 73.26

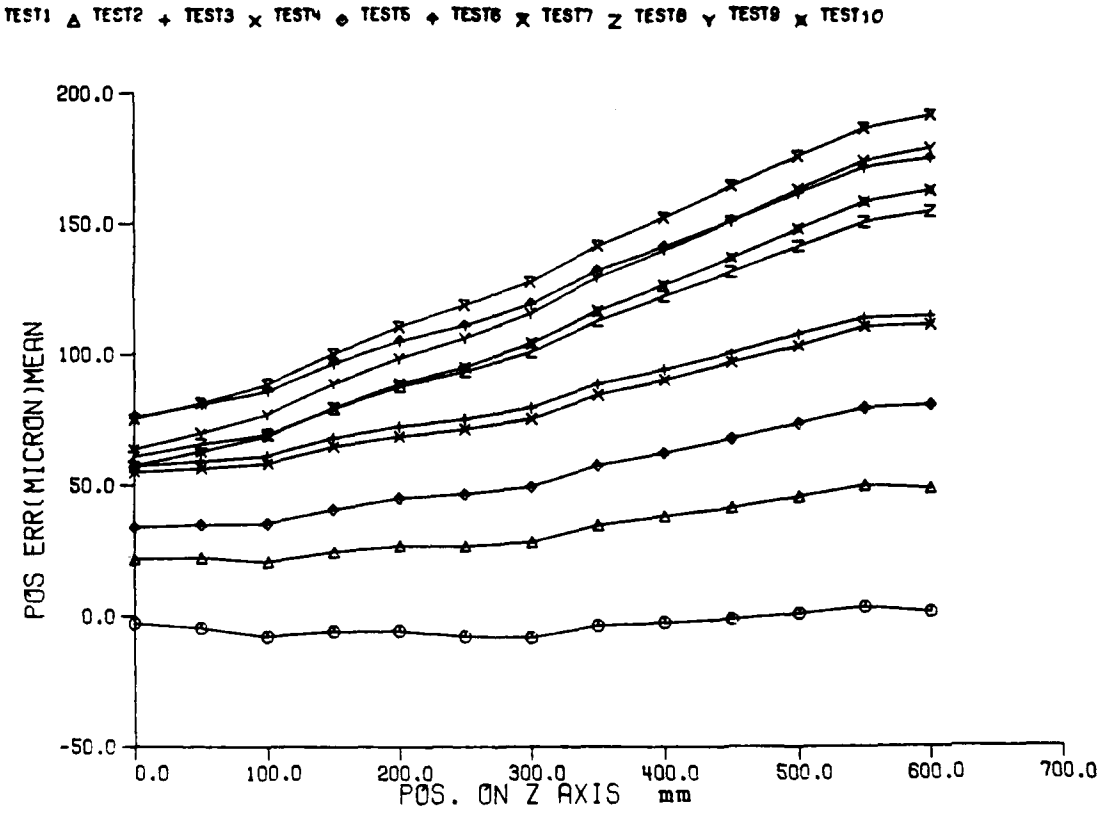
TEST1 TEST2 TEST3 TEST4 TEST5 TEST6 TEST7 TEST8 TEST9 TEST10
200.0
150.0
100.0
50.0
0.0
-50.0
POS ERR(MICRON)MEAN
0.0
100.0
200.0
300.0
400.0
500.0
600.0
700.0
POS. ON Z AXIS mm

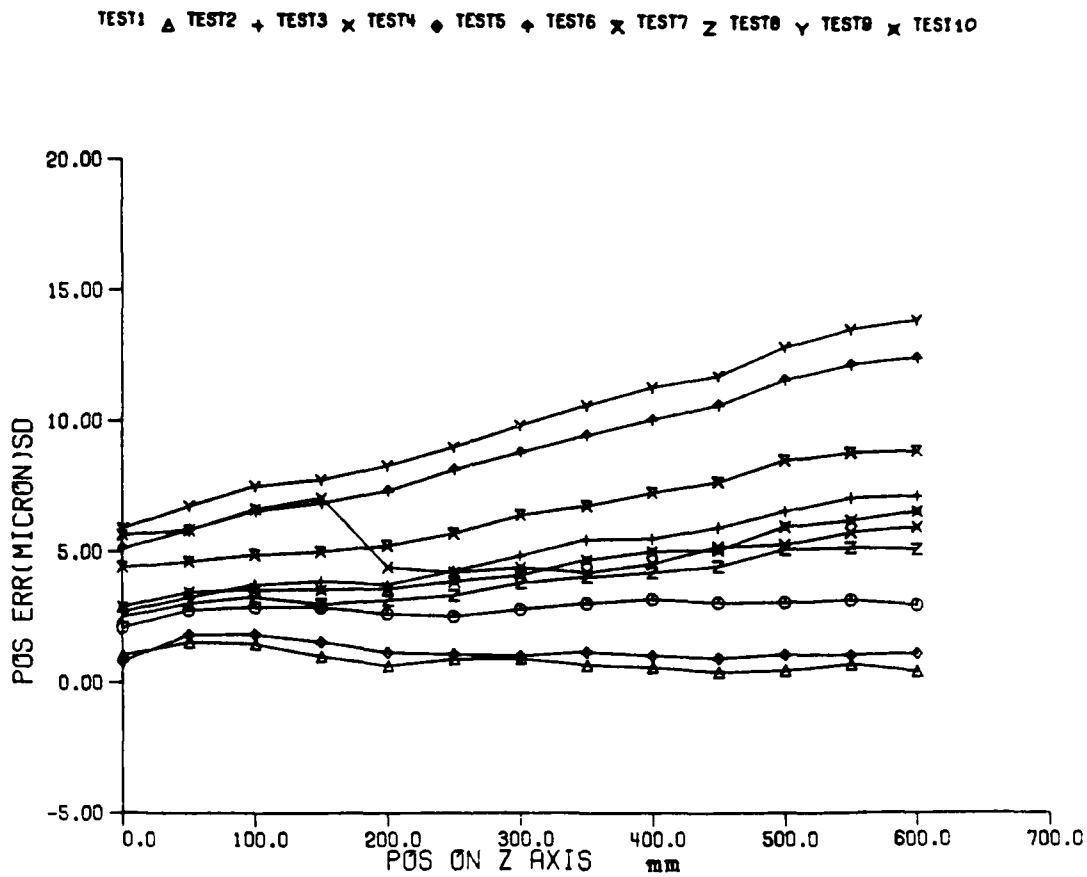
TEST1 TEST2 TEST3 TEST4 TEST5 TEST6 TEST7 TEST8 TEST9 TEST10
20.00
15.00
10.00
5.00
0.00
-5.00
POS ERR(MICRON)SD
0.0
100.0
200.0
300.0
400.0
500.0
600.0
700.0
POS ON Z AXIS
mm

Z AXIS
RESULTS OF POSITION ERROR (micron)
==========
X axis at 300.00 mms (indep)
Y axis at 300.00 mms (indep)
Z axis at 40.00 mms
Dir of laser R

Test # 1

POS	0.	50.	100.	150.	200.	250.
POS	300.	350.	400.	450.	500.	550.
POS	600.					
TEMP	25.43	25.18	25.20	25.72	25.45	25.28
TEMP	25.30	25.40	25.48	25.67	25.75	25.70
TEMP	25.73	25.21	25.21	25.23	25.21	25.31
TEMP	25.51	25.29				
MEAN	-2.79	-4.47	-7.71	-5.74	-5.47	-7.48
MEAN	-7.95	-3.36	-2.23	-1.03	1.31	3.95
MEAN	1.82					
SD	2.10	2.77	2.88	2.88	2.64	2.54
SD	2.81	3.03	3.19	3.06	3.07	3.17
SD	2.98					

Test # 2

POS	0.	50.	100.	150.	200.	250.
POS	300.	350.	400.	450.	500.	550.
POS	600.					
TEMP	26.25	28.43	26.84	28.43	26.30	25.93
TEMP	26.13	25.96	26.10	26.01	26.11	26.11
TEMP	26.06	25.86	25.98	25.74	25.79	25.74
TEMP	25.93	25.64				
MEAN	21.84	22.37	20.86	24.76	27.14	26.98
MEAN	28.67	35.09	38.47	41.69	46.04	50.38
MEAN	49.19					
SD	1.06	1.56	1.49	1.01	0.66	0.91
SD	0.93	0.68	0.58	0.41	0.48	0.72
SD	0.45					

Test # 3

POS	0.	50.	100.	150.	200.	250.
POS	300.	350.	400.	450.	500.	550.
POS	600.					
TEMP	28.15	32.58	29.31	31.93	27.84	27.09
TEMP	27.82	27.11	27.38	27.04	27.21	26.99
TEMP	26.94	26.92	27.46	26.60	26.87	26.57
TEMP	26.77	26.33				
MEAN	57.37	59.34	61.42	68.16	72.58	75.35
MEAN	80.00	89.06	94.41	100.66	108.14	114.36
MEAN	115.05					
SD	2.72	3.26	3.74	3.87	3.76	4.29
SD	4.85	5.46	5.49	5.91	6.53	7.04
SD	7.12					

Test # 4

POS	0.	50.	100.	150.	200.	250.
POS	300.	350.	400.	450.	500.	550.
POS	600.					
TEMP	29.13	34.94	31.27	33.69	29.20	28.20
TEMP	29.44	28.15	28.67	28.15	28.37	28.03
TEMP	27.93	27.86	28.81	27.42	27.88	27.50

TEMP	27.59	27.15				
MEAN	55.07	56.62	58.50	65.00	68.77	71.60
MEAN	75.67	84.98	90.51	97.24	103.62	111.11
MEAN	111.82					
SD	5.64	5.84	6.62	7.05	4.43	4.24
SD	4.42	4.21	4.53	5.19	5.27	5.74
SD	5.95					

Test # 5

POS	0.	50.	100.	150.	200.	250.
POS	300.	350.	400.	450.	500.	550.
POS	600.					
TEMP	29.38	32.98	30.67	31.43	29.53	28.56
TEMP	29.83	28.53	29.12	28.36	28.66	28.41
TEMP	28.44	28.36	29.34	27.90	28.44	28.07
TEMP	28.15	27.70				
MEAN	33.94	35.00	35.55	40.88	45.20	46.76
MEAN	49.73	58.04	62.60	68.02	73.95	80.02
MEAN	81.15					
SD	0.82	1.83	1.84	1.56	1.16	1.09
SD	1.03	1.18	1.03	0.94	1.08	1.07
SD	1.13					

Test # 6

POS	0.	50.	100.	150.	200.	250.
POS	300.	350.	400.	450.	500.	550.
POS	600.					
TEMP	29.50	35.99	32.60	36.26	30.46	29.49
TEMP	30.78	29.54	30.17	29.51	29.88	29.29
TEMP	29.22	28.81	29.85	28.25	28.71	28.51
TEMP	28.61	28.10				
MEAN	75.95	81.06	86.28	96.80	105.37	111.28
MEAN	119.67	132.39	141.63	151.34	162.08	171.76
MEAN	175.34					
SD	5.13	5.85	6.57	6.86	7.34	8.16
SD	8.80	9.45	10.04	10.60	11.56	12.13
SD	12.38					

Test # 7

POS	0.	50.	100.	150.	200.	250.
POS	300.	350.	400.	450.	500.	550.
POS	600.					
TEMP	29.45	37.19	32.71	37.35	30.82	29.85
TEMP	31.47	29.94	30.96	30.19	30.72	29.89
TEMP	29.92	28.85	30.26	28.04	28.70	28.63
TEMP	28.99	28.19				
MEAN	75.33	81.53	88.83	100.27	110.65	119.00
MEAN	127.86	141.78	152.52	164.39	175.85	186.75
MEAN	191.77					
SD	4.41	4.62	4.88	4.99	5.24	5.71
SD	6.40	6.74	7.23	7.64	8.47	8.76
SD	8.84					

Test # 8

POS	0.	50.	100.	150.	200.	250.
POS	300.	350.	400.	450	500.	550.
POS	600.					
TEMP	29.25	35.60	32.01	35.58	30.89	29.75
TEMP	31.42	29.84	30.89	30.40	30.91	30.14
TEMP	30.31	28.87	30.23	28.04	28.75	28.70

TEMP	29.29	28.26				
MEAN	60.95	65.85	69.57	79.60	88.00	93.71
MEAN	101.35	113.17	122.51	131.73	141.70	151.14
MEAN	155.15					
SD	2.52	3.04	3.28	3.01	3.17	3.36
SD	3.83	4.04	4.21	4.44	5.09	5.16
SD	5.10					

Test # 9

POS	0.	50.	100.	150.	200.	250.
POS	300.	350.	400.	450.	500.	550.
POS	600.					
TEMP	29.40	36.60	32.60	37.61	31.20	30.10
TEMP	31.70	30.39	31.53	30.83	31.49	30.52
TEMP	30.64	28.86	30.32	28.01	28.74	28.74
TEMP	29.49	28.28				
MEAN	63.66	70.08	77.34	88.97	98.63	106.27
MEAN	115.94	129.59	139.97	151.04	163.31	174.06
MEAN	179.25					
SD	5.89	6.74	7.49	7.74	8.29	9.00
SD	9.82	10.59	11.27	11.69	12.79	13.47
SD	13.83					

Test # 10

POS	0.	50.	100.	150.	200.	250.
POS	300.	350.	400.	450.	500.	550.
POS	600.					
TEMP	29.18	36.01	32.27	36.46	31.18	30.01
TEMP	31.69	30.28	31.49	30.86	31.49	30.55
TEMP	30.71	28.87	30.35	27.99	28.72	28.77
TEMP	29.55	28.31				
MEAN	57.37	63.12	69.07	79.90	89.00	95.30
MEAN	104.74	117.03	126.80	137.08	148.37	158.76
MEAN	163.09					
SD	2.92	3.47	3.55	3.56	3.61	3.90
SD	4.13	4.69	5.00	5.07	5.96	6.19
SD	6.54					

ACTUAL DATA

						Spread	
						Up	Down
Test# = 1							
-0.10	-5.40	-5.40	-4.20	-4.20	-3.30	-0.44	-1.51
-6.50	-8.80	-3.70	-7.50	-2.70	-6.30	0.17	-3.06
-9.40	-12.40	-7.30	-10.70	-5.90	-9.50	0.18	-3.16
-7.80	-10.50	-5.49	-8.80	-3.69	-7.60	0.08	-3.23
-7.90	-9.80	-6.00	-8.00	-4.20	-6.50	-0.57	-2.63
-10.30	-11.40	-7.80	-9.90	-6.39	-8.50	-0.69	-2.46
-10.99	-12.30	-8.70	-10.50	-6.99	-8.70	-0.94	-2.55
-6.41	-8.30	-3.81	-6.29	-1.80	-4.49	-0.65	-3.00
-5.00	-7.39	-2.69	-5.40	-0.61	-3.51	-0.54	-3.20
-4.49	-5.62	-1.80	-3.91	0.	-1.80	-1.07	-2.75
-1.89	-3.60	0.40	-1.59	2.50	0.49	-0.98	-2.88
0.43	-1.22	3.30	1.28	4.82	2.99	-1.10	-2.93
-2.38	-2.38	0	0	2.08	2.08	-1.92	-1.92

Test# = 2							
20.70	20.80	20.80	21.20	21.20	22.30	-0.94	-0.41
22.20	20.00	23.40	20.30	23.10	21.40	0.53	-1.80
21.90	18.90	21.80	18.90	21.60	19.40	0.90	-1.79
24.51	23.61	25.30	23.41	24.99	23.80	0.17	-1.16
26.70	26.70	27.21	26.20	26.79	26.60	-0.24	-0.64
25.89	27.10	26.99	26.31	26.50	26.31	-0.52	-0.41
27.50	29.21	28.50	27.80	28.02	28.81	-0.67	-0.07
35.00	35.31	35.49	34.30	35.00	33.91	0.07	-0.59
38.51	38.70	38.51	37.69	39.00	37.69	0.21	-0.45
41.69	41.90	41.60	41.50	41.20	41.20	-0.19	-0.15
45.99	46.69	45.99	45.90	45.50	45.68	-0.21	0.05
50.78	51.88	50.17	50.17	49.62	49.68	-0.19	0.20
49.62	49.62	49.32	49.32	48.89	48.89	0.08	0.08
Test# = 3							
62.80	59.80	59.80	57.20	57.20	56.40	2.56	0.43
65.10	61.20	62.80	59.50	60.60	57.80	3.49	0.16
68.40	64.00	64.80	61.20	62.90	59.80	3.94	0.25
75.10	72.10	71.30	68.80	69.00	67.00	3.64	1.14
78.70	77.90	75.20	73.90	71.70	71.90	2.62	1.98
81.21	82.20	77.61	77.90	74.60	74.71	2.45	2.91
86.49	87.49	82.79	83.10	78.89	79.71	2.73	3.44
96.98	97.41	92.10	92.10	88.50	88.01	3.47	3.45
102.51	103.21	97.29	96.71	93.69	93.69	3.42	3.46
108.61	110.50	103.49	103.70	99.21	100.49	3.11	4.24
117.10	118.59	110.99	112.40	106.51	107.70	3.40	4.76
123.90	126.28	116.88	118.59	112.18	114.32	3.29	5.37
125.92	125.92	118.53	118.53	114.20	114.20	4.50	4.50
Test# = 4							
68.70	57.80	57.80	55.60	55.60	51.50	5.63	-0.10
70.60	59.80	59.00	57.30	57.00	53.50	5.58	0.25
74.60	61.80	61.30	59.40	58.70	54.60	6.37	0.10
82.20	69.40	67.20	65.99	64.10	62.30	6.17	0.90
76.90	74.20	71.50	70.50	68.30	67.20	3.46	1.86
76.40	78.09	74.40	75.30	71.20	70.91	2.40	3.17
80.90	82.31	78.61	79.41	75.01	75.10	2.51	3.27
90.39	90.70	88.10	88.71	84.29	84.41	2.61	2.96
96.31	96.59	93.69	93.69	89.60	90.30	2.69	3.02
103.91	104.40	100.89	101.41	96.50	97.11	3.19	3.73
110.41	111.39	107.09	107.79	102.69	102.91	3.11	3.74
117.80	118.53	113.71	115.11	115.11	110.90	4.43	3.73
120.00	120.00	115.91	115.91	111.57	111.57	4.01	4.01
Test# = 5							
35.10	34.70	34.70	34.40	34.40	33.60	0.79	0.29
38.00	34.50	37.00	33.80	36.40	33.30	2.13	-1.13
39.00	35.30	37.70	34.50	36.60	33.90	2.22	-0.98
43.59	41.00	42.69	40.21	41.50	39.70	1.72	-0.58
47.39	45.59	46.30	45.30	45.70	44.40	1.26	-0.10
48.60	47.50	48.20	46.91	47.10	46.20	1.21	0.11
51.30	50.99	50.29	50.51	49.50	49.59	0.63	0.63
59.69	59.39	59.60	58.11	58.29	57.40	1.16	0.26
64.30	63.81	63.51	62.71	62.90	62.19	0.96	0.30
69.40	69.00	68.91	68.60	67.90	67.81	0.72	0.45
75.29	75.50	74.58	75.01	73.61	74.01	0.54	0.89
81.42	81.73	80.69	80.87	79.53	79.59	0.52	0.71
82.58	82.58	82.21	82.21	80.87	80.87	0.74	0.74
Test# = 6							
85.20	80.60	80.60	76.90	76.90	73.70	4.95	1.12
91.10	86.30	86.70	82.10	82.70	78.50	5.77	1.24
97.20	93.00	92.30	88.20	87.70	84.10	6.12	2.15

107.70	105.00	102.60	99.59	97.40	94.80	5.77	3.00
116.50	114.81	110.79	109.21	105.70	104.10	5.63	4.00
123.20	122.70	116.30	116.39	110.90	110.31	5.52	5.19
132.20	132.29	125.09	125.40	118.59	118.99	5.62	5.88
146.00	146.00	138.00	138.49	131.29	131.50	6.04	6.28
155.91	156.19	147.31	148.50	140.29	140.69	6.21	6.83
165.99	167.11	157.10	158.69	149.69	151.09	6.25	7.63
177.80	179.41	168.21	170.01	160.49	162.11	6.75	8.43
187.93	190.61	177.80	180.11	169.62	171.69	6.69	9.05
193.42	193.42	182.50	182.50	174.19	174.19	8.03	8.03
Test# = 7							
81.90	77.40	77.40	72.90	72.90	69.51	2.07	-2.07
88.20	83.90	83.70	79.10	79.10	75.20	2.13	-2.13
95.60	91.90	91.00	86.70	85.60	82.20	1.90	-1.90
107.19	104.00	101.81	98.40	96.41	93.80	1.53	-1.53
117.00	115.91	111.40	109.89	105.50	104.20	0.65	-0.65
125.79	125.00	119.00	118.90	112.59	112.70	0.13	-0.13
135.19	135.10	127.29	127.90	120.70	121.00	-0.14	0.14
149.69	149.29	141.20	141.60	134.49	134.40	0.02	-0.02
160.71	160.80	152.01	152.40	144.50	144.71	-0.12	0.12
172.30	174.01	163.30	164.31	155.30	157.10	-0.75	0.75
184.81	186.40	174.29	175.99	166.29	167.30	-0.72	0.72
195.80	198.00	185.18	186.52	176.57	178.41	-0.90	0.90
202.03	202.03	190.98	190.98	182.31	182.31	0.	0.
Test# = 8							
64.30	62.40	62.40	59.60	59.60	57.40	1.15	-1.15
69.80	67.20	67.90	63.90	64.90	61.40	1.68	-1.68
74.70	72.30	66.60	68.60	68.70	66.50	0.43	-0.43
83.69	81.80	80.70	78.20	77.70	75.50	1.10	-1.10
91.71	91.40	88.59	87.01	85.40	83.89	0.57	-0.57
97.20	97.79	93.70	93.60	90.19	89.80	-0.02	0.02
105.10	106.29	100.89	101.41	97.29	97.11	-0.25	0.25
117.40	117.89	113.19	113.31	108.61	108.61	-0.10	0.10
127.01	127.41	122.41	122.59	118.01	117.61	-0.03	0.03
136.29	137.21	131.20	131.99	126.71	127.01	-0.34	0.34
146.51	148.28	141.11	142.00	135.59	136.69	-0.63	0.63
156.01	158.02	149.90	151.61	145.20	146.12	-0.77	0.77
160.89	160.89	155.09	155.09	149.48	149.48	0.	0.
Test# = 9							
74.30	69.30	69.30	64.60	64.60	61.10	5.74	1.34
81.90	76.00	76.50	71.70	71.80	67.10	6.65	1.52
90.10	84.80	84.10	79.70	78.70	74.50	6.96	2.33
102.01	97.50	95.20	92.00	89.80	86.90	6.70	3.16
111.80	108.99	105.19	101.90	99.20	96.50	6.77	3.83
119.71	118.50	112.50	110.90	106.00	105.19	6.47	5.26
130.49	129.49	122.71	121.19	115.30	114.81	6.89	5.89
144.99	144.29	136.41	135.59	129.79	128.39	7.48	6.50
156.40	155.70	147.19	146.91	138.70	139.10	7.46	7.27
167.69	167.79	158.20	158.51	149.41	150.30	7.40	7.83
181.09	182.10	171.30	171.30	161.29	162.60	7.92	8.69
192.99	193.97	181.58	182.68	171.69	173.89	8.03	9.45
199.10	199.10	187.99	187.99	177.49	177.49	8.94	8.94
Test# = 10							
61.60	58.80	58.80	55.80	55.80	53.40	1.37	-1.37
68.40	64.00	64.70	61.00	62.40	58.20	2.05	-2.05
74.20	70.90	70.60	67.10	67.50	64.10	1.70	-1.70
85.01	82.40	80.90	78.40	77.50	75.20	1.24	-1.24
93.90	92.41	89.10	88.10	85.80	84.70	0.60	-0.60
100.01	99.50	95.31	94.89	91.20	90.90	0.20	-0.20
109.50	109.71	103.91	104.40	100.71	100.19	-0.03	0.03

122.59	122.19	116.79	116.79	111.91	111.91	0.07	-0.07
132.39	132.81	126.10	126.59	121.31	121.61	-0.20	0.20
142.61	143.49	135.99	136.81	131.71	131.90	-0.32	0.32
154.69	155.91	147.09	148.28	141.51	142.70	-0.60	0.60
164.98	166.81	157.59	158.81	151.61	152.77	-0.70	0.70
170.72	170.72	162.41	162.41	156.13	156.13	0.	0.

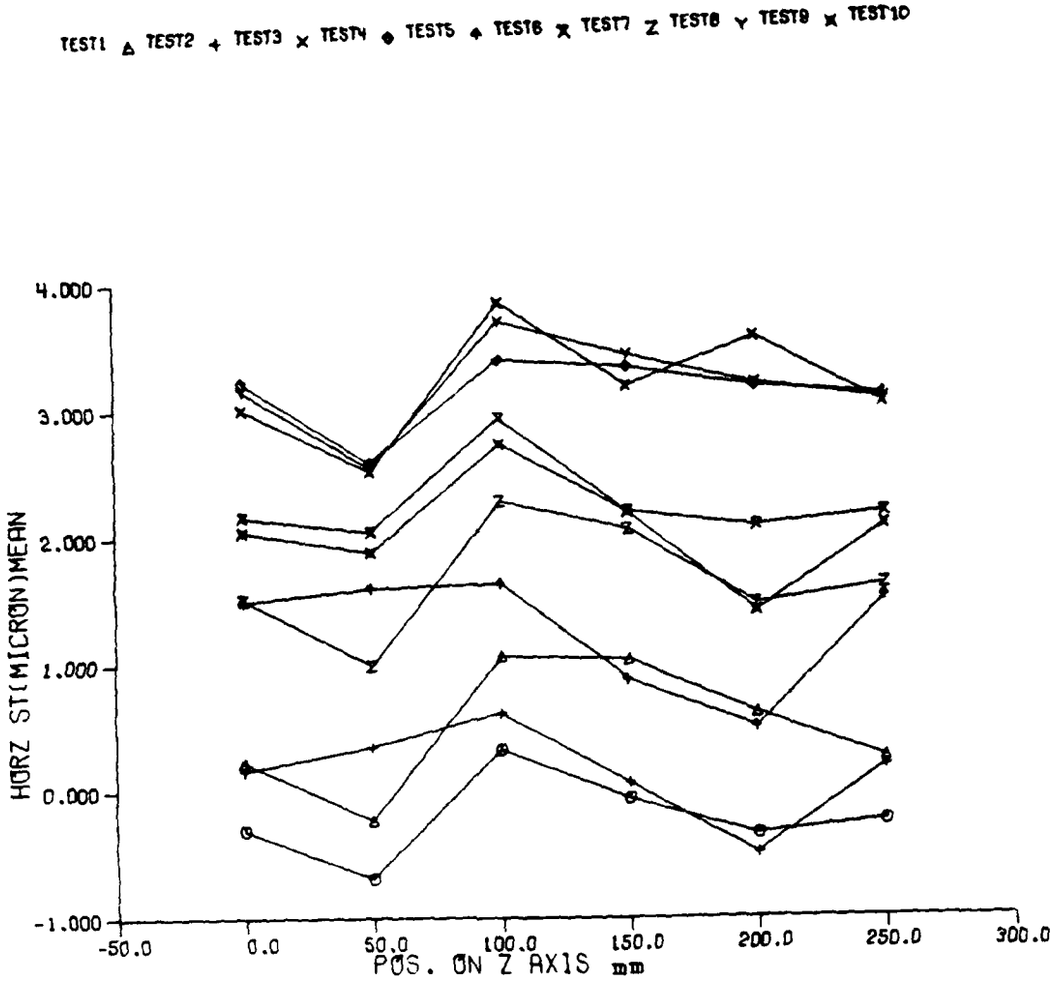
TEST1 TEST2 TEST3 TEST4 TEST5 TEST6 TEST7 TEST8 TEST9 TEST10
4.000
3.000
2.000
1.000
0.000
-1.000
HORZ ST(MICRON)MEAN
-50.0
0.0
50.0
100.0
150.0
200.0
250.0
300.0
POS. ON Z AXIS mm

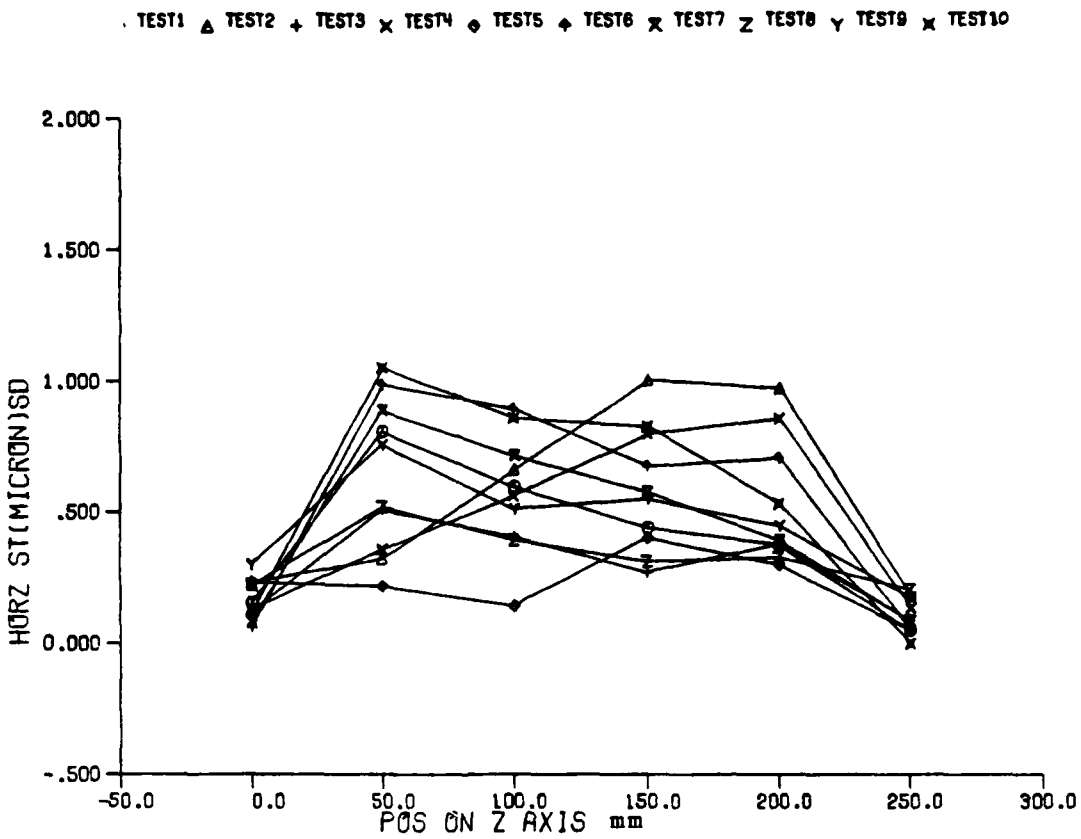
TEST1 TEST2 TEST3 TEST4 TEST5 TEST6 TEST7 TEST8 TEST9 TEST10
2.000
1.500
1.000
.500
0.000
-.500
HORZ ST(MICRON)SD
-50.0
0.0
50.0
100.0
150.0
200.0
250.0
300.0
POS ON Z AXIS mm

Z AXIS
RESULTS OF HORZ. ST. ERROR (micron)

X axis at 147.716 mms
Y axis at 63.612 mms
Z axis at 467.921 mms
Dir of laser R

Test # 1

POS	0.	50.	100.	150.	200.	250.
TEMP	25.15	25.58	25.12	26.20	25.14	24.95
TEMP	25.12	25.04	25.24	25.19	25.27	25.17
TEMP	25.17	24.72	24.83	24.58	24.65	24.68
TEMP	24.92	24.58				
MEAN	-0.30	-0.68	0.33	-0.05	-0.33	-0.23
SD	0.15	0.81	0.60	0.44	0.38	0.05

Test # 2

POS	0.	50.	100.	150.	200.	250.
TEMP	26.15	28.01	26.45	28.43	25.96	25.52
TEMP	25.84	25.50	25.62	25.59	25.69	25.54
TEMP	25.57	25.23	25.44	25.03	25.18	25.08
TEMP	25.30	24.93				
MEAN	0.23	-0.22	1.07	1.05	0.62	0.27
SD	0.23	0.32	0.66	1.01	0.98	0.19

Test # 3

POS	0.	50.	100.	150.	200.	250.
TEMP	26.93	30.45	27.97	30.21	26.72	26.16
TEMP	26.65	26.06	26.18	26.11	26.28	25.99
TEMP	26.08	25.79	26.26	25.45	25.77	25.52
TEMP	25.79	25.30				
MEAN	0.17	0.35	0.62	0.08	-0.49	0.20
SD	0.12	0.51	0.41	0.27	0.38	0.09

Test # 4

POS	0.	50.	100.	150.	200.	250.
TEMP	27.98	34.62	30.41	33.82	27.83	27.17
TEMP	28.27	27.14	27.32	27.07	27.46	26.70
TEMP	26.85	26.63	27.61	26.09	26.66	26.24
TEMP	26.49	25.87				
MEAN	3.02	2.52	3.86	3.20	3.59	3.07
SD	0.13	0.36	0.56	0.80	0.86	0.14

Test # 5

POS	0.	50.	100.	150.	200.	250.
TEMP	27.58	33.45	31.22	34.17	27.76	27.54
TEMP	29.30	27.79	28.52	27.93	28.20	27.42
TEMP	27.44	26.93	28.15	26.44	26.98	26.76
TEMP	26.64	26.44				
MEAN	3.23	2.60	3.41	3.36	3.20	3.13
SD	0.23	0.22	0.14	0.40	0.30	0.05

Test # 6

POS	0.	50.	100.	150.	200.	250.
TEMP	27.53	34.36	31.63	35.54	28.15	27.98
TEMP	30.06	28.30	29.03	28.45	28.79	27.82
TEMP	27.89	27.25	28.72	26.81	27.47	27.11
TEMP	27.18	26.79				
MEAN	1.50	1.61	1.65	0.89	0.51	1.53

SD	0 06	0. 99	0. 89	0. 68	0. 71	0. 05

Test # 7

POS	0.	50.	100.	150.	200.	250.
TEMP	27. 60	34. 62	31. 81	35. 17	28. 44	28. 24
TEMP	30. 41	28. 51	29. 46	28. 78	29. 17	28. 14
TEMP	28. 19	27. 53	29. 07	27. 02	27. 75	27. 39
TEMP	27. 56	27. 04				
MEAN	2. 17	2. 05	2. 95	2. 22	2. 10	2. 20
SD	0. 08	0. 89	0. 72	0. 58	0. 39	0. 09

Test # 8

POS	0.	50.	100.	150.	200.	250.
TEMP	27. 25	33. 90	32. 78	36. 38	28. 39	28. 29
TEMP	30. 19	28. 80	29. 73	29. 02	29. 15	28. 17
TEMP	28. 10	27. 31	28. 31	26. 75	27. 14	27. 34
TEMP	26. 90	27. 02				
MEAN	1. 52	1. 00	2. 29	2. 07	1. 49	1. 63
SD	0. 22	0. 52	0. 39	0. 31	0. 33	0. 21

Test # 9

POS	0.	50.	100.	150.	200.	250.
TEMP	27. 10	30. 80	29. 56	31. 46	27. 59	27. 61
TEMP	29. 49	28. 37	29. 51	28. 83	28. 93	28. 39
TEMP	28. 30	27. 24	28. 44	26. 71	27. 29	27. 44
TEMP	27. 54	27. 15				
MEAN	3. 17	2. 56	3. 71	3. 45	3. 23	3. 10
SD	0. 30	0. 76	0. 51	0. 55	0. 45	0. 18

Test # 10

POS	0.	50.	100.	150.	200.	250.
TEMP	26. 50	31. 34	29. 96	33. 14	27. 57	27. 55
TEMP	29. 33	27. 94	29. 45	29. 08	29. 42	28. 35
TEMP	28. 21	26. 89	27. 86	26. 49	26 93	27. 10
TEMP	26. 88	26. 91				
MEAN	2. 05	1. 89	2. 75	2. 20	1. 43	2 10
SD	0. 12	1. 05	0. 86	0. 83	0. 53	0.

ACTUAL DATA

						SPREAD Up	SPREAD Down
Test # 1							
-0 60	-0. 30	-0. 30	-0. 20	-0. 20	-0. 20	-0. 07	0 07
0 10	-1 44	-0. 02	-1. 50	0. 08	-1 32	0 74	-0 74
0. 90	-0. 28	0. 76	-0 20	0 96	-0 14	0. 54	-0 54
0 20	-0. 62	0. 24	-0 30	0. 54	-0. 36	0 38	-0 38
-0 50	-0 76	0 22	-0. 60	0. 02	-0 38	0 25	-0 25
-0. 30	-0. 30	-0. 20	-0 20	-0. 20	-0. 20	0	0
Test # 2							
-0 10	0. 50	0 50	0 20	0 20	0. 10	-0 03	0 03
-0 44	0 28	-0. 50	0 04	-0 50	-0. 22	-0 26	0 26
0 32	1. 86	0. 70	1 78	0. 50	1 26	-0 56	0 56
0 18	2 54	0 40	1 92	0 10	1 14	-0 82	0 82
-0 46	2 02	0	1 46	-0 10	0 82	-0 81	0 81
0 50	0 50	0 20	0 20	0 10	0 10	0	0
Test # 3							
0	0 10	0 10	0 30	0 30	0 20	-0 03	0 03

0.88	-0.20	0.74	-0.12	0.82	0.00	0.46	-0.46
0.86	-0.00	0.98	0.36	1.04	0.50	0.34	-0.34
-0.06	-0.30	0.42	0.24	0.26	-0.10	0.13	-0.13
-0.48	-0.90	-0.34	-0.68	0.18	-0.70	0.27	-0.27
0.10	0.10	0.30	0.30	0.20	0.20	0.	0
Test # 4							
2.90	2.90	2.90	3.10	3.10	3.20	-0.05	0.05
2.00	3.00	2.24	2.68	2.50	2.72	-0.28	0.28
3.00	4.40	3.48	4.26	3.70	4.34	-0.47	0.47
2.40	4.30	2.42	3.74	2.70	3.66	-0.70	0.70
2.50	4.70	2.96	4.22	3.10	4.08	-0.74	0.74
2.90	2.90	3.10	3.10	3.20	3.20	-0.00	-0.00
Test # 5							
3.70	3.20	3.20	3.10	3.10	3.10	0.10	-0.10
2.24	2.74	2.76	2.44	2.80	2.60	0.00	-0.00
3.18	3.58	3.32	3.48	3.50	3.40	-0.08	0.08
2.82	3.92	2.98	3.42	3.40	3.60	-0.29	0.29
3.06	3.56	2.74	3.16	3.20	3.50	-0.20	0.20
3.20	3.20	3.10	3.10	3.10	3.10	0.	0.
Test # 6							
1.40	1.50	1.50	1.50	1.50	1.60	-0.03	0.03
2.24	0.66	2.64	0.74	2.62	0.74	0.89	-0.89
2.18	0.62	2.68	1.18	2.44	0.78	0.79	-0.79
1.22	0.18	1.82	0.52	1.36	0.22	0.58	-0.58
0.96	-0.46	1.46	0.16	0.88	0.06	0.59	-0.59
1.50	1.50	1.50	1.50	1.60	1.60	0.	0.
Test # 7							
2.10	2.20	2.20	2.10	2.10	2.30	-0.03	0.03
2.78	1.20	2.90	1.18	2.90	1.34	0.81	-0.81
3.36	2.50	3.70	2.26	3.70	2.18	0.64	-0.64
2.84	2.00	2.80	1.54	2.50	1.62	0.50	-0.50
2.62	1.90	2.40	1.72	2.30	1.66	0.34	-0.34
2.20	2.20	2.10	2.10	2.30	2.30	0.	0.
Test # 8							
1.20	1.50	1.50	1.50	1.50	1.90	-0.12	0.12
1.12	0.58	1.50	0.50	1.70	0.58	0.44	-0.44
2.44	2.06	2.70	1.70	2.70	2.16	0.32	-0.32
2.16	2.44	2.10	1.50	2.20	2.04	0.08	-0.08
1.68	1.12	1.40	1.10	1.80	1.82	0.14	-0.14
1.50	1.50	1.50	1.50	1.90	1.90	0.	0.
Test # 9							
3.70	3.10	3.10	2.90	2.90	3.30	0.07	-0.07
3.42	1.60	2.98	1.74	3.16	2.44	0.63	-0.63
3.94	2.90	4.26	3.28	3.92	3.98	0.33	-0.33
4.06	2.50	3.44	3.32	3.48	3.92	0.21	-0.21
3.38	2.40	3.62	3.06	3.34	3.56	0.22	-0.22
3.10	3.10	2.90	2.90	3.30	3.30	0.	0.
Test # 10							
1.80	2.10	2.10	2.10	2.10	2.10	-0.05	0.05
2.74	1.00	2.92	1.02	2.88	0.78	0.96	-0.96
3.38	1.90	3.64	2.04	3.56	1.96	0.78	-0.78
2.42	1.00	3.06	1.76	3.14	1.84	0.67	-0.67
1.16	1.10	2.18	1.18	2.02	0.92	0.36	-0.36
2.10	2.10	2.10	2.10	2.10	2.10	-0.00	-0.00

Regression Equation

2.17*T19 - 1.06*T7 + 0.91*T5 - 50.70

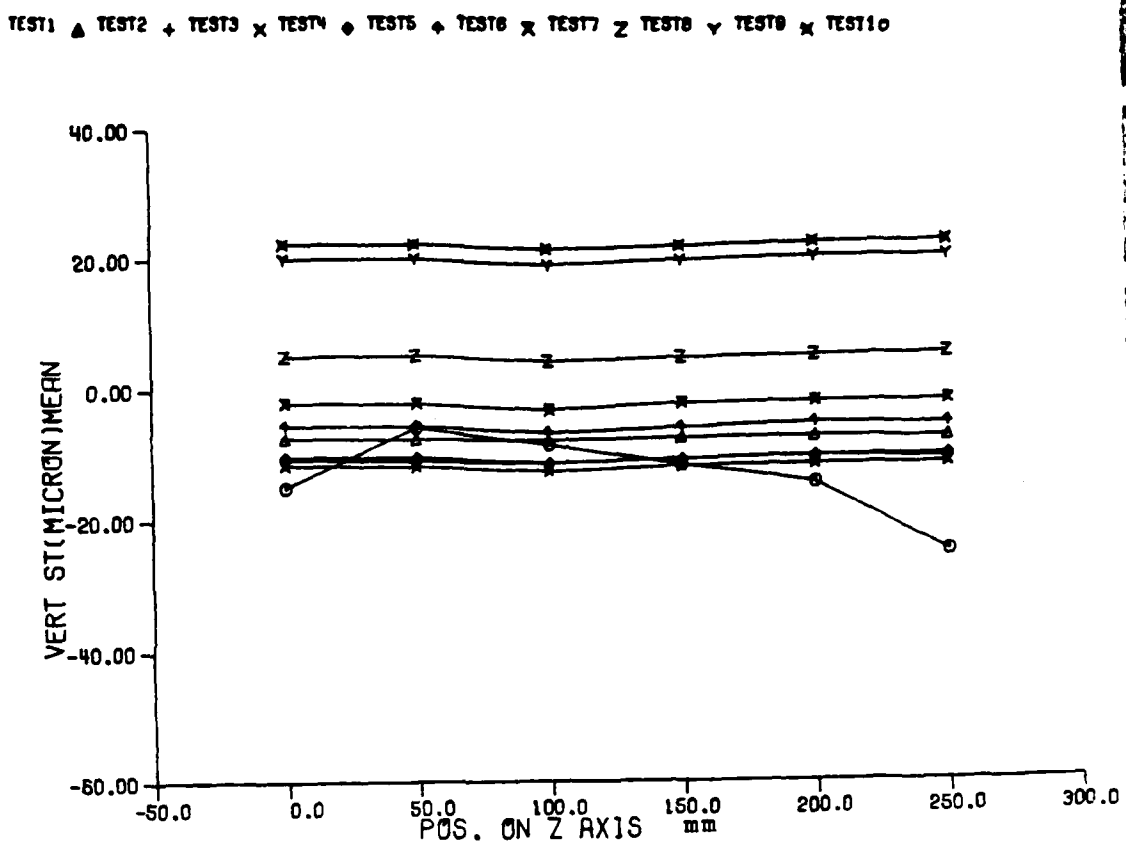
TEST1 TEST2 TEST3 TEST4 TEST5 TEST6 TEST7 TEST8 TEST9 TEST10
40.00
20.00
0.00
-20.00
-40.00
-60.00
VERT ST(MICRON)MEAN
-50.0
0.0
50.0
100.0
150.0
200.0
250.0
300.0
POS. ON Z AXIS mm

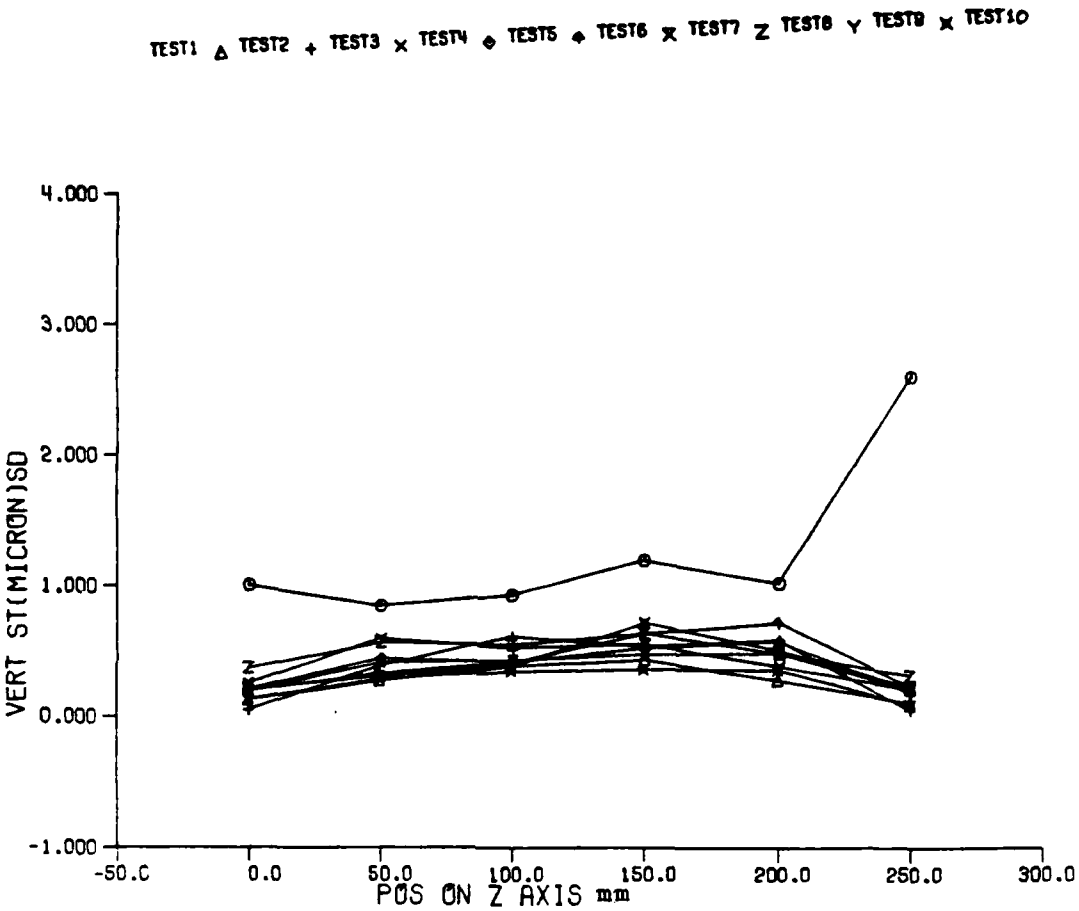
TEST1 △ TEST2 + TEST3 × TEST4 ◆ TEST5 ◆ TEST6 ✕ TEST7 Z TEST8 Y TEST9 ✕ TEST10
4.000
3.000
2.000
1.000
0.000
-1.000
VERT ST(MICRON)SD
-50.0
0.0
50.0
100.0
150.0
200.0
250.0
300.0
POS ON Z AXIS mm

Z AXIS
RESULTS OF VERT. ST. ERROR (micron)

X axis at 141.125 mms
Y axis at 64.214 mms
Z axis at 450.000 mms
Dir of laser R

Test # 1

POS	0.	50.	100.	150.	200.	250.
TEMP	22.55	22.85	22.96	23.27	22.38	22.16
TEMP	22.26	22.28	22.41	22.33	22.46	22.38
TEMP	22.38	22.01	22.16	21.91	22.04	21.91
TEMP	22.29	21.87				
MEAN	-5.83	-3.81	-4.78	-6.05	-6.93	-6.53
SD	1.68	3.31	3.28	3.18	3.65	0.10

Test # 2

POS	0.	50.	100.	150.	200.	250.
TEMP	24.38	25.47	23.82	25.00	23.82	23.15
TEMP	23.45	23.03	23.15	22.93	23.03	23.08
TEMP	23.23	23.11	23.45	22.86	23.20	22.81
TEMP	23.16	22.59				
MEAN	-7.38	-7.58	-7.93	-7.63	-7.40	-7.43
SD	0.13	0.28	0.39	0.44	0.28	0.10

Test # 3

POS	0.	50.	100.	150.	200.	250.
TEMP	25.30	27.73	25.04	26.63	24.55	23.81
TEMP	24.25	23.47	23.59	23.47	23.69	23.52
TEMP	23.76	23.71	24.18	23.34	23.79	23.29
TEMP	23.69	23.00				
MEAN	-10.67	-10.98	-11.40	-10.95	-10.47	-10.67
SD	0.05	0.39	0.62	0.54	0.59	0.05

Test # 4

POS	0.	50.	100.	150.	200.	250.
TEMP	26.08	30.12	26.78	29.25	25.31	24.62
TEMP	25.29	24.33	24.33	24.21	24.60	24.14
TEMP	24.43	24.33	25.05	23.89	24.41	23.87
TEMP	24.21	23.52				
MEAN	-11.57	-11.82	-12.62	-11.94	-11.66	-11.50
SD	0.14	0.29	0.35	0.37	0.36	0.09

Test # 5

POS	0.	50.	100.	150.	200.	250.
TEMP	26.93	33.28	29.38	31.94	26.49	25.78
TEMP	27.11	25.59	25.76	25.39	25.91	25.15
TEMP	25.39	25.27	26.57	24.70	25.49	24.78
TEMP	25.10	24.36				
MEAN	-10.35	-10.40	-11.46	-10.96	-10.45	-10.27
SD	0.21	0.45	0.42	0.53	0.58	0.19

Test # 6

POS	0.	50.	100.	150	200.	250
TEMP	26.88	35.29	30.89	33.61	27.41	26.65
TEMP	28.56	26.53	26.97	26.41	26.85	25.94
TEMP	26.14	25.97	27.75	25.36	26.34	25.53
TEMP	25.72	25.06				
MEAN	-5.50	-5.62	-6.74	-6.09	-5.33	-5.43

SD	0 20	0 33	0 42	0 64	0. 72	0 23

Test # 7

POS	0	50.	100	150	200	250
TEMP	27 02	36 93	31 79	35. 00	28 17	27. 39
TEMP	29 66	27. 41	28. 22	27. 29	27. 83	26. 75
TEMP	27. 00	26. 61	28. 68	25. 87	27. 02	26. 19
TEMP	26. 39	25. 67				
MEAN	-2 07	-2. 20	-3. 37	-2. 43	-2. 15	-1. 97
SD	0. 20	0. 41	0. 43	0. 48	0. 49	0. 21

Test # 8

POS	0.	50.	100.	150	200.	250.
TEMP	26. 98	33 16	30. 54	31. 17	28. 06	27. 33
TEMP	29 60	27. 30	28. 04	27. 38	27. 84	27. 13
TEMP	27. 35	26. 84	28. 62	26. 13	27. 21	26. 50
TEMP	26. 69	26. 01				
MEAN	5. 05	5. 11	4. 06	4. 60	4. 91	5. 23
SD	0. 37	0. 57	0. 55	0. 64	0. 49	0. 31

Test # 9

POS	0.	50.	100.	200.	250.	300.
TEMP	25. 25	30. 54	28. 96	32. 26	26. 50	26. 67
TEMP	28. 62	27. 25	28. 52	27. 72	27. 72	27. 08
TEMP	27. 13	25. 88	27. 01	25. 37	25. 93	26. 05
TEMP	26. 03	25. 78				
MEAN	20. 00	19. 94	18. 75	19. 39	19. 96	20. 13
SD	0. 25	0. 60	0. 53	0. 56	0. 39	0. 21

Test # 10

POS	0.	50.	100.	150.	200.	250.
TEMP	25. 05	29. 76	28. 38	30. 93	26. 25	26. 37
TEMP	28. 25	26. 98	28. 37	27. 62	27. 62	26. 98
TEMP	27. 01	25. 68	26. 79	25. 19	25. 73	25. 93
TEMP	26. 12	25. 66				
MEAN	22. 28	22. 13	21. 17	21. 57	22. 13	22. 37
SD	0. 21	0. 31	0. 39	0. 73	0. 51	0. 23

ACTUAL DATA

						SPREAD Up	SPREAD Down
Test # 1							
-2. 40	-6. 40	-6 40	-6. 60	-6. 60	-6 60	0. 70	-0 70
-2. 92	-0. 72	-7. 98	-1. 62	-7. 98	-1. 62	-2. 49	2 49
-3 14	-1. 74	-8. 96	-2 94	-8. 96	-2. 94	-2. 24	2 24
-2. 66	-4 86	-10. 04	-4. 36	-10. 04	-4. 36	-1. 53	1. 53
-2. 58	-5. 38	-11. 42	-5 38	-11. 42	-5. 38	-1. 55	1. 55
-6. 40	-6. 40	-6 60	-6. 60	-6. 60	-6. 60	-0. 00	-0. 00
Test # 2							
-7. 20	-7. 30	-7. 30	-7. 50	-7. 50	-7. 50	0. 05	-0. 05
-7. 60	-7 32	-7. 86	-7. 30	-7. 96	-7. 46	-0. 22	0. 22
-7. 90	-7. 54	-8. 12	-7. 70	-8. 62	-7. 72	-0. 28	0. 28
-7. 90	-7. 16	-7. 98	-7. 20	-8. 18	-7. 38	-0. 39	0 39
-7. 50	-6. 98	-7. 44	-7. 30	-7. 84	-7. 34	-0. 19	0 19
-7. 30	-7 30	-7. 50	-7. 50	-7. 50	-7. 50	0.	0
Test # 3							
-10 60	-10. 70	-10. 70	-10 70	-10. 70	-10. 60	0.	0

-11.28	-10.60	-11.30	-10.70	-11.40	-10.58	-0.35	0.35
-12.06	-10.90	-12.00	-11.00	-11.80	-10.66	-0.55	0.55
-11.24	-10.60	-11.70	-10.50	-11.30	-10.34	-0.47	0.47
-10.92	-10.40	-11.20	-10.00	-10.70	-9.62	-0.47	0.47
-10.70	-10.70	-10.70	-10.70	-10.60	-10.60	0.	0.
Test #	4						
-11.80	-11.60	-11.60	-11.50	-11.50	-11.40	-0.07	0.07
-12.26	-11.82	-11.92	-11.50	-11.92	-11.50	-0.21	0.21
-13.12	-12.44	-12.94	-12.20	-12.64	-12.40	-0.28	0.28
-12.48	-11.86	-12.16	-11.50	-12.06	-11.60	-0.29	0.29
-12.14	-11.98	-11.48	-11.40	-11.78	-11.20	-0.14	0.14
-11.60	-11.60	-11.50	-11.50	-11.40	-11.40	0.	0.
Test #	5						
-10.60	-10.50	-10.50	-10.20	-10.20	-10.10	-0.08	0.08
-11.10	-10.28	-10.58	-9.92	-10.58	-9.96	-0.35	0.35
-12.00	-11.26	-11.86	-11.04	-11.56	-11.02	-0.35	0.35
-11.40	-10.64	-11.54	-10.56	-11.34	-10.28	-0.47	0.47
-11.30	-10.52	-10.82	-9.88	-10.42	-9.74	-0.40	0.40
-10.50	-10.50	-10.20	-10.20	-10.10	-10.10	0.	0.
Test #	6						
-5.60	-5.70	-5.70	-5.40	-5.40	-5.20	-0.07	0.07
-6.14	-5.66	-5.76	-5.40	-5.60	-5.16	-0.21	0.21
-7.18	-6.92	-7.12	-6.40	-6.70	-6.12	-0.26	0.26
-6.82	-6.08	-6.68	-5.70	-6.20	-5.08	-0.47	0.47
-5.96	-5.34	-6.34	-5.00	-5.00	-4.34	-0.44	0.44
-5.70	-5.70	-5.40	-5.40	-5.20	-5.20	-0.00	-0.00
Test #	7						
-2.30	-2.10	-2.10	-2.10	-2.10	-1.70	-0.10	0.10
-2.88	-2.24	-2.20	-1.70	-2.34	-1.86	-0.27	0.27
-3.86	-3.18	-3.80	-3.00	-3.58	-2.82	-0.37	0.37
-3.04	-2.32	-2.60	-1.90	-2.82	-1.88	-0.39	0.39
-2.82	-2.16	-2.10	-1.70	-2.56	-1.54	-0.35	0.35
-2.10	-2.10	-2.10	-2.10	-1.70	-1.70	-0.00	-0.00
Test #	8						
4.50	4.90	4.90	5.20	5.20	5.60	-0.18	0.18
4.34	5.12	4.60	5.76	5.12	5.70	-0.42	0.42
3.58	3.94	3.70	4.72	3.64	4.80	-0.42	0.42
3.92	4.56	4.00	5.08	4.46	5.60	-0.48	0.48
4.46	5.08	4.60	5.14	4.48	5.70	-0.40	0.40
4.90	4.90	5.20	5.20	5.60	5.60	0.	0.
Test #	9						
19.60	20.00	20.00	20.00	20.00	20.40	-0.13	0.13
19.16	20.24	19.58	20.08	19.70	20.88	-0.46	0.46
18.02	19.38	18.56	18.56	18.60	19.36	-0.35	0.35
18.68	19.72	19.14	19.54	19.00	20.24	-0.45	0.45
19.64	20.06	19.72	20.12	19.60	20.62	-0.31	0.31
20.00	20.00	20.00	20.00	20.40	20.40	0.	0.
Test #	10						
22.10	22.10	22.10	22.40	22.40	22.60	-0.08	0.08
21.70	22.40	21.86	22.42	22.04	22.38	-0.27	0.27
20.50	21.40	21.02	21.44	21.08	21.56	-0.30	0.30
20.80	21.70	20.68	22.26	21.52	22.44	-0.57	0.57
21.40	22.20	21.84	22.08	22.36	22.92	-0.27	0.27
22.10	22.10	22.40	22.40	22.60	22.60	0.	0.

Regression Equation

$$7.73*T9 - 2.65*T2 - 1.05*T1 - 93.54$$

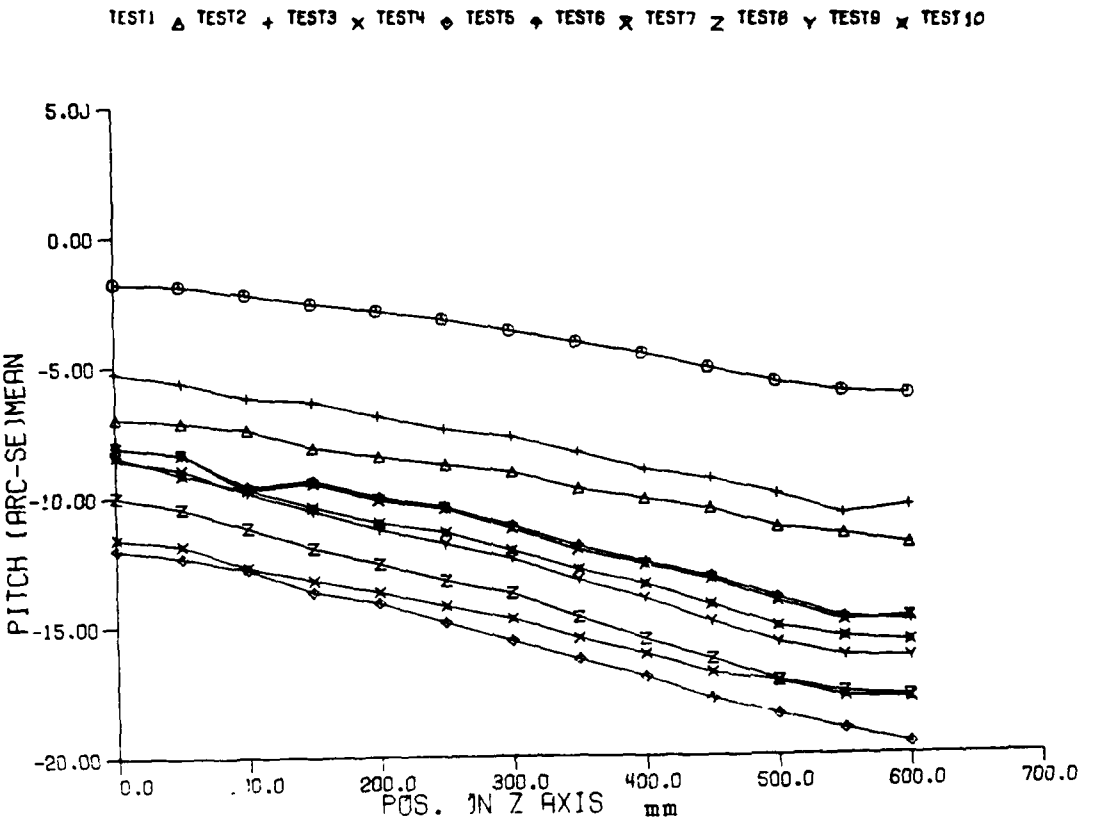
TEST1 TEST2 TEST3 TEST4 TEST5 TEST6 TEST7 TEST8 TEST9 TEST10
5.00
0.00
-5.00
-10.00
-15.00
-20.00
PITCH (ARC-SE)MEAN
0.0
100.0
200.0
300.0
400.0
500.0
600.0
700.0
POS. ON Z AXIS mm

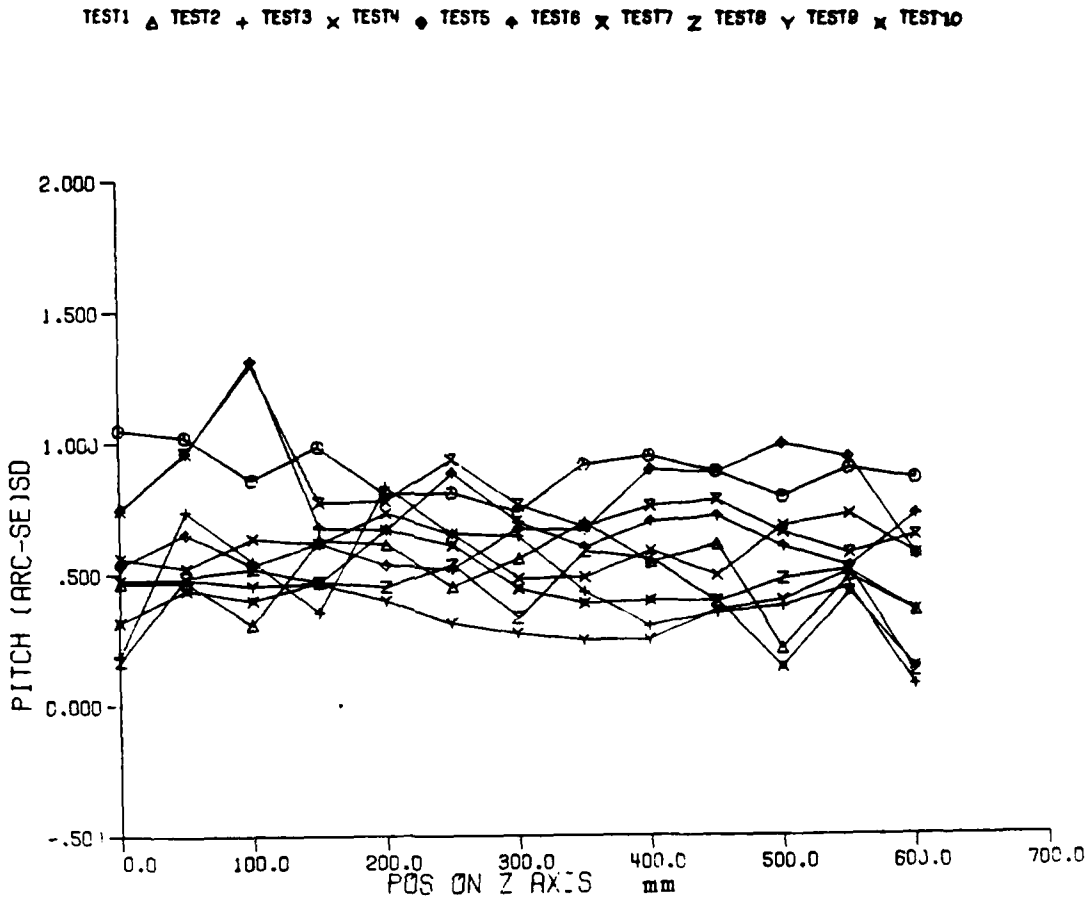
TEST1 TEST2 TEST3 TEST4 TEST5 TEST6 TEST7 TEST8 TEST9 TEST10
2.000
1.500
1.000
.500
0.000
-.500
PITCH (ARC-SEISD
0.0
100.0
200.0
300.0
400.0
500.0
600.0
700.0
POS ON Z AXIS mm

Z AXIS

RESULTS OF PITCH ERROR (arc - secs)

X axis at 300.00 mms (indep)
Y axis at 300.00 mms (indep)
Z axis at 40.00 mms

Test # 1 Dir of level P

POS	0.	50.	100.	150.	200.	250.
POS	300.	350.	400.	450.	500.	550.
POS	600.					
TEMP	28.25	27.69	27.59	29.10	28.10	27.59
TEMP	27.62	27.74	27.93	28.20	28.23	28.30
TEMP	28.23	27.50	27.42	27.28	27.23	27.47
TEMP	27.74	27.30				
MEAN	-1.78	-1.87	-2.24	-2.58	-2.88	-3.20
MEAN	-3.67	-4.13	-4.57	-5.14	-5.69	-6.07
MEAN	-6.17					
SD	1.05	1.02	0.86	0.98	0.80	0.81
SD	0.74	0.91	0.95	0.89	0.79	0.90
SD	0.86					

Test # 2

POS	0.	50.	100.	150.	200.	250.
POS	300.	350.	400.	450.	500.	550.
POS	600.					
TEMP	29.20	29.31	28.26	31.11	28.09	27.87
TEMP	28.17	28.07	28.48	28.56	28.68	28.63
TEMP	28.44	27.78	27.21	26.92	26.31	27.61
TEMP	27.34	27.31				
MEAN	-6.95	-7.10	-7.40	-8.08	-8.44	-8.75
MEAN	-9.06	-9.73	-10.12	-10.52	-11.27	-11.54
MEAN	-11.92					
SD	0.47	0.47	0.31	0.63	0.61	0.45
SD	0.56	0.70	0.54	0.61	0.21	0.49
SD	0.35					

Test # 3

POS	0.	50.	100.	150.	200.	250.
POS	300.	350.	400.	450.	500.	550.
POS	600.					
TEMP	29.35	32.90	30.50	34.49	29.65	28.92
TEMP	29.70	29.09	29.58	29.38	29.68	29.29
TEMP	29.24	28.48	28.99	28.12	28.34	28.34
TEMP	28.58	28.02				
MEAN	-5.22	-5.56	-6.20	-6.35	-6.90	-7.40
MEAN	-7.72	-8.32	-9.00	-9.37	-9.98	-10.76
MEAN	-10.46					
SD	0.18	0.74	0.55	0.35	0.83	0.65
SD	0.64	0.43	0.30	0.35	0.37	0.45
SD	0.07					

Test # 4

POS	0.	50.	100.	150.	200.	250.
POS	300.	350.	400.	450.	500.	550.
POS	600.					

TEMP	29.38	33.47	31.10	35.28	29.17	28.59
TEMP	30.05	29.08	29.95	29.90	30.37	29.46
TEMP	29.42	27.78	28.59	27.49	27.64	27.96
TEMP	27.83	27.62				
MEAN	-11.60	-11.85	-12.71	-13.19	-13.65	-14.17
MEAN	-14.69	-15.47	-16.09	-16.82	-17.17	-17.78
MEAN	-17.86					
SD	0.56	0.53	0.64	0.62	0.73	0.65
SD	0.48	0.49	0.59	0.49	0.68	0.72
SD	0.57					

Test # 5

POS	0.	50.	100.	150.	200.	250.
POS	300.	350.	400.	450.	500.	550.
POS	600.					
TEMP	28.75	32.99	31.03	35.69	28.99	28.53
TEMP	30.04	28.99	30.18	29.84	30.21	29.45
TEMP	29.23	27.53	28.33	27.26	27.40	27.72
TEMP	27.62	27.48				
MEAN	-12.02	-12.32	-12.78	-13.64	-14.06	-14.80
MEAN	-15.54	-16.29	-16.96	-17.81	-18.41	-19.02
MEAN	-19.58					
SD	0.53	0.65	0.53	0.62	0.53	0.52
SD	0.67	0.67	0.89	0.88	0.99	0.94
SD	0.57					

Test # 6

POS	0.	50.	100.	150.	200.	250.
POS	300.	350.	400.	450.	500.	550.
POS	600.					
TEMP	28.27	32.80	31.01	36.25	29.53	29.06
TEMP	30.45	29.35	30.59	30.25	30.74	29.86
TEMP	29.79	28.25	29.40	27.69	28.21	28.28
TEMP	28.69	27.99				
MEAN	-8.04	-8.31	-9.59	-9.36	-10.00	-10.38
MEAN	-11.13	-11.93	-12.56	-13.13	-13.96	-14.75
MEAN	-14.87					
SD	0.75	0.96	1.31	0.68	0.67	0.88
SD	0.70	0.60	0.70	0.72	0.60	0.52
SD	0.72					

Test # 7

POS	0.	50.	100.	150	200.	250.
POS	300.	350.	400.	450.	500.	550.
POS	600.					
TEMP	28.27	32.80	31.01	36.25	29.53	29.06
TEMP	30.45	29.35	30.59	30.25	30.74	29.86
TEMP	29.79	28.25	29.40	27.69	28.21	28.28
TEMP	28.69	27.99				
MEAN	-8.04	-8.31	-9.70	-9.46	-10.11	-10.43
MEAN	-11.23	-12.07	-12.65	-13.23	-14.09	-14.87
MEAN	-14.74					
SD	0.75	0.96	1.29	0.77	0.78	0.94
SD	0.76	0.68	0.76	0.78	0.66	0.57
SD	0.64					

Test # 8

POS	0.	50.	100	150	200.	250.
POS	300.	350.	400	450.	500.	550.
POS	600.					
TEMP	27.90	33.60	31.06	36.88	29.26	28.87
TEMP	30.36	29.26	30.79	30.50	31.23	29.99
TEMP	30.09	27.70	29.14	27.19	27.82	27.90
TEMP	28.73	27.63				
MEAN	-9.97	-10.41	-11.20	-11.96	-12.57	-13.20
MEAN	-13.71	-14.67	-15.52	-16.29	-17.14	-17.61
MEAN	-17.77					
SD	0.17	0.49	0.52	0.47	0.45	0.54
SD	0.33	0.58	0.56	0.39	0.48	0.51
SD	0.12					

Test # 9

POS	0.	50.	100.	150.	200.	250.
POS	300.	350.	400.	450.	500.	550.
POS	600.					
TEMP	28.55	34.80	32.00	36.72	30.08	29.35
TEMP	31.07	29.64	30.93	30.76	31.46	30.22
TEMP	30.47	28.35	29.57	27.94	28.52	28.47
TEMP	29.06	28.20				
MEAN	-8.51	-8.90	-9.83	-10.53	-11.25	-11.79
MEAN	-12.38	-13.23	-13.94	-14.85	-15.66	-16.22
MEAN	-16.27					
SD	0.48	0.48	0.45	0.46	0.40	0.31
SD	0.27	0.25	0.25	0.36	0.40	0.51
SD	0.36					

Test # 10

POS	0.	50.	100.	150.	200.	250.
POS	300.	350.	400.	450.	500.	550.
POS	600.					
TEMP	28.55	35.13	32.21	35.73	30.44	29.54
TEMP	31.24	29.88	31.07	30.59	31.32	30.22
TEMP	30.37	28.57	29.86	28.15	28.74	28.64
TEMP	29.17	28.35				
MEAN	-8.39	-9.10	-9.69	-10.38	-10.99	-11.36
MEAN	-12.07	-12.83	-13.40	-14.20	-15.05	-15.49
MEAN	-15.66					
SD	0.32	0.44	0.40	0.47	0.67	0.61
SD	0.44	0.39	0.40	0.40	0.14	0.42
SD	0.14					

ACTUAL DATA

						SPREAD	
						Up	Down
Test # = 1							
-0.12	-1.30	-1.30	-1.61	-1.61	-1.73	0.77	0.23
0.	-1.57	-0.71	-2.20	-1.50	-2.83	1.14	-0.33
-0.55	-1.93	-1.34	-2.36	-1.77	-2.83	1.02	-0.14
-0.59	-2.40	-1.81	-2.68	-2.05	-3.58	1.10	-0.30

-1.69	-2.52	-1.97	-2.83	-2.09	-3.86	0.96	-0.19
-1.77	-2.80	-2.28	-3.43	-2.68	-3.90	0.96	-0.17
-2.52	-3.07	-2.87	-3.58	-3.35	-3.94	0.76	0.14
-2.52	-3.43	-3.27	-4.02	-4.02	-4.57	0.86	0.12
-3.19	-3.62	-3.74	-4.45	-4.25	-5.16	0.85	0.17
-3.54	-4.33	-4.45	-5.47	-4.65	-5.75	0.93	-0.05
-4.17	-4.84	-5.16	-5.79	-5.51	-6.26	0.75	0.06
-4.53	-5.43	-5.00	-6.26	-5.67	-6.54	1.00	-0.01
-5.08	-5.08	-5.43	-5.43	-6.30	-6.30	0.57	0.57
Test # = 2							
-6.42	-6.61	-6.61	-7.48	-7.48	-7.09	0.11	-0.11
-6.50	-7.47	-7.32	-6.50	-7.44	-7.36	0.01	-0.01
-7.01	-7.76	-7.17	-7.20	-7.56	-7.68	0.15	-0.15
-6.89	-8.39	-7.91	-8.19	-8.58	-8.50	0.28	-0.28
-7.56	-8.23	-8.19	-9.25	-8.39	-9.02	0.39	-0.39
-8.19	-9.21	-8.70	-8.31	-9.29	-8.78	0.02	-0.02
-8.74	-8.94	-9.29	-8.27	-9.92	-9.21	-0.26	0.26
-9.37	-9.49	-10.39	-8.78	-10.67	-9.69	-0.41	0.41
-9.61	-10.39	-10.24	-9.84	-11.02	-9.65	-0.16	0.16
-9.61	-10.75	-10.39	-10.39	-11.50	-10.51	0.03	-0.03
-11.14	-11.57	-11.30	-10.94	-11.30	-11.38	0.03	-0.03
-11.50	-11.93	-10.98	-10.98	-12.17	-11.69	-0.01	0.01
-11.54	-11.54	-11.89	-11.89	-12.32	-12.32	0.	0
Test # = 3							
-4.88	-5.35	-5.35	-5.20	-5.20	-5.35	0.08	-0.08
-4.84	-6.54	-5.08	-5.75	-4.88	-6.30	0.63	-0.63
-5.87	-6.57	-6.06	-6.26	-5.43	-7.01	0.41	-0.41
-6.10	-6.69	-6.14	-6.50	-5.91	-6.77	0.30	-0.30
-5.75	-7.99	-6.61	-7.60	-6.34	-7.13	0.67	-0.67
-6.61	-7.95	-7.76	-7.48	-6.57	-8.03	0.42	-0.42
-6.81	-8.23	-7.76	-7.60	-7.32	-8.62	0.43	-0.43
-7.68	-8.50	-8.11	-8.27	-8.39	-8.98	0.26	-0.26
-8.58	-9.06	-8.90	-9.09	-8.86	-9.49	0.22	-0.22
-9.02	-9.96	-9.13	-9.61	-9.25	-9.25	0.24	-0.24
-9.45	-10.24	-9.72	-10.51	-10.00	-9.96	0.26	-0.26
-10.35	-10.91	-10.31	-10.79	-10.67	-11.54	0.31	-0.31
-10.39	-10.39	-10.43	-10.43	-10.55	-10.55	0	0
Test # = 4							
-11.57	-11.65	-11.65	-11.06	-11.06	-12.60	0.17	-0.17
-11.93	-12.20	-11.50	-11.85	-11.06	-12.56	0.35	-0.35
-12.68	-13.19	-12.28	-12.87	-11.73	-13.50	0.48	-0.48
-12.80	-13.98	-13.23	-13.03	-12.32	-13.78	0.41	-0.41
-13.78	-13.74	-13.35	-13.50	-12.64	-14.88	0.39	-0.39
-14.37	-14.57	-13.90	-14.25	-13.03	-14.92	0.41	-0.41
-14.53	-15.00	-14.69	-15.00	-13.82	-15.12	0.35	-0.35
-15.51	-15.94	-15.31	-15.51	-14.61	-15.91	0.32	-0.32
-15.83	-16.93	-15.91	-16.30	-15.20	-16.38	0.45	-0.45
-17.05	-17.44	-16.38	-17.17	-16.14	-16.77	0.30	-0.30
-17.44	-17.91	-17.28	-17.52	-15.94	-16.93	0.28	-0.28
-18.15	-18.78	-17.60	-18.11	-16.73	-17.28	0.28	-0.28
-18.43	-18.43	-17.99	-17.99	-17.17	-17.17	-0.00	-0.00
Test # = 5							
-11.73	-12.20	-12.20	-11.54	-11.54	-12.91	0.20	-0.20
-12.24	-13.11	-12.05	-12.99	-12.17	-11.34	0.16	-0.16
-12.80	-13.27	-12.72	-13.46	-12.36	-12.05	0.15	-0.15
-13.58	-14.76	-13.46	-13.78	-13.23	-12.99	0.21	-0.21
-13.86	-14.80	-14.13	-14.49	-13.70	-13.35	0.16	-0.16
-15.16	-15.28	-14.96	-15.04	-14.49	-13.90	-0.07	0.07
-15.98	-16.02	-15.67	-15.98	-15.31	-14.29	-0.11	0.11
-16.85	-16.97	-16.26	-16.46	-16.06	-15.12	-0.10	0.10

-17.80	-18.03	-16.65	-17.28	-16.26	-15.75	0.06	-0.06
-18.23	-18.90	-18.23	-17.87	-17.24	-16.38	-0.09	0.09
-18.62	-20.04	-18.23	-18.74	-17.56	-17.24	0.27	-0.27
-19.69	-20.43	-18.58	-19.17	-18.35	-17.87	0.14	-0.14
-20.16	-20.16	-19.69	-19.69	-18.90	-18.90	0.	0
Test # = 6							
-6.54	-8.19	-8.19	-8.43	-8.43	-8.46	0.32	-0.32
-6.54	-8.74	-7.95	-8.98	-8.54	-9.13	0.64	-0.64
-7.83	-9.37	-9.17	-10.31	-11.73	-9.13	0.01	-0.01
-8.35	-8.98	-9.65	-10.28	-9.17	-9.76	0.31	-0.31
-10.20	-8.82	-9.88	-10.83	-9.96	-10.31	-0.01	0.01
-9.21	-9.53	-10.43	-11.57	-10.55	-10.98	0.31	-0.31
-10.43	-10.35	-10.98	-12.20	-11.50	-11.30	0.16	-0.16
-11.42	-11.06	-12.28	-12.68	-12.24	-11.89	-0.05	0.05
-11.73	-11.73	-12.87	-13.50	-12.80	-12.72	0.09	-0.09
-12.44	-12.13	-13.31	-14.06	-13.58	-13.27	0.02	-0.02
-13.11	-13.54	-14.45	-14.76	-14.06	-13.86	0.09	-0.09
-14.17	-14.57	-15.00	-15.67	-14.45	-14.65	0.21	-0.21
-13.94	-13.94	-15.31	-15.31	-15.35	-15.35	0.	0.
Test # = 7							
-6.54	-8.19	-8.19	-8.43	-8.43	-8.46	0.32	-0.32
-6.54	-8.74	-7.95	-8.98	-8.54	-9.13	0.64	-0.64
-7.83	-9.37	-9.17	-10.31	-11.73	-9.76	0.12	-0.12
-8.35	-8.98	-9.65	-10.28	-9.17	-10.31	0.40	-0.40
-10.20	-8.82	-9.88	-10.83	-9.96	-10.98	0.10	-0.10
-9.21	-9.53	-10.43	-11.57	-10.55	-11.30	0.37	-0.37
-10.43	-10.35	-10.98	-12.20	-11.50	-11.89	0.26	-0.26
-11.42	-11.06	-12.28	-12.68	-12.24	-12.72	0.09	-0.09
-11.73	-11.73	-12.87	-13.50	-12.80	-13.27	0.18	-0.18
-12.44	-12.13	-13.31	-14.06	-13.58	-13.86	0.12	-0.12
-13.11	-13.54	-14.45	14.76	-14.06	-14.65	0.22	-0.22
-14.17	-14.57	-15.00	-15.67	-14.45	-15.35	0.33	-0.33
-13.94	-13.94	-15.31	-15.31	-14.96	-14.96	0.	0
Test # = 8							
-9.69	-10.08	-10.08	-10.08	-10.08	-9.84	0.03	-0.03
-9.84	-10.79	-10.08	-10.94	-10.00	-10.83	0.44	-0.44
-10.79	-11.61	-11.10	-11.77	-10.43	-11.50	0.43	-0.43
-11.50	-12.56	-11.61	-12.36	-11.54	-12.20	0.41	-0.41
-12.05	-13.15	-12.36	-12.87	-12.13	-12.83	0.39	-0.39
-13.07	-14.06	-12.68	-13.50	-12.64	-13.27	0.41	-0.41
-13.62	-14.02	-13.62	-14.06	-13.15	-13.82	0.25	-0.25
-15.12	-15.55	-14.25	-14.53	-13.94	-14.65	0.24	-0.24
-15.63	-16.02	-15.16	-16.06	-14.61	-15.67	0.39	-0.39
-16.50	-16.65	-16.06	-16.73	-15.79	-16.98	0.17	-0.17
-17.20	-17.76	-17.09	-17.36	-16.30	-17.13	0.28	-0.28
-17.91	-18.43	-17.36	-17.60	-16.93	-17.44	0.21	-0.21
-17.91	-17.91	-17.76	-17.76	-17.64	-17.64	0.	0.
Test # = 9							
-8.58	-8.70	-8.70	-7.95	-7.95	-9.17	0.10	-0.10
-8.62	-9.21	-8.94	-8.74	-8.27	-9.65	0.30	-0.30
-9.21	-10.39	-9.76	-10.04	-9.41	-10.16	0.37	-0.37
-10.24	-11.18	-10.43	-10.04	-10.28	-11.02	0.22	-0.22
-11.02	-11.69	-10.94	-11.42	-10.75	-11.65	0.34	-0.34
-11.69	-12.40	-11.54	-11.61	-11.69	-11.81	0.15	-0.15
-12.20	-12.76	-12.09	-12.64	-12.17	-12.44	0.23	-0.23
-13.31	-13.54	-13.19	-13.19	-12.80	-13.35	0.13	-0.13
-13.74	-14.37	-13.90	-13.94	-13.66	-14.02	0.17	-0.17
-14.57	-15.20	-14.61	-15.16	-14.41	-15.16	0.32	-0.32
-15.47	-16.22	-15.24	-16.02	-15.31	-15.71	0.32	-0.32
-16.34	-17.05	-15.63	-16.26	-15.75	-16.30	0.31	-0.31

-16.73	-16.73	-16.06	-16.06	-16.02	-16.02	0.	0
Test # = 10							
-8.39	-8.66	-8.66	-8.43	-8.43	-7.80	-0.10	0.10
-8.98	-9.72	-8.86	-9.53	-8.54	-8.98	0.31	-0.31
-9.61	-9.53	-9.57	-10.28	-9.13	-10.00	0.25	-0.25
-10.04	-10.67	-10.12	-10.91	-9.76	-10.79	0.41	-0.41
-10.28	-11.69	-10.39	-11.38	-10.51	-11.69	0.60	-0.60
-10.59	-12.01	-11.02	-12.17	-11.06	-11.30	0.47	-0.47
-11.50	-12.56	-11.93	-12.56	-11.69	-12.20	0.37	-0.37
-12.68	-13.39	-12.72	-13.23	-12.48	-12.48	0.20	-0.20
-13.11	-14.06	-13.58	-13.50	-13.15	-12.99	0.12	-0.12
-13.98	-14.80	-13.94	-14.61	-13.94	-13.94	0.25	-0.25
-15.00	-15.04	-14.80	-15.24	-15.08	-15.12	0.09	-0.09
-15.24	-15.94	-15.43	-15.94	-14.84	-15.51	0.31	-0.31
-15.83	-15.83	-15.51	-15.51	-15.63	-15.63	0.	0.

Regression Equation

T11*-4.07 - 0.35e-3*T2*Z + 5.72*T19 - 0.37*T2
-34.67

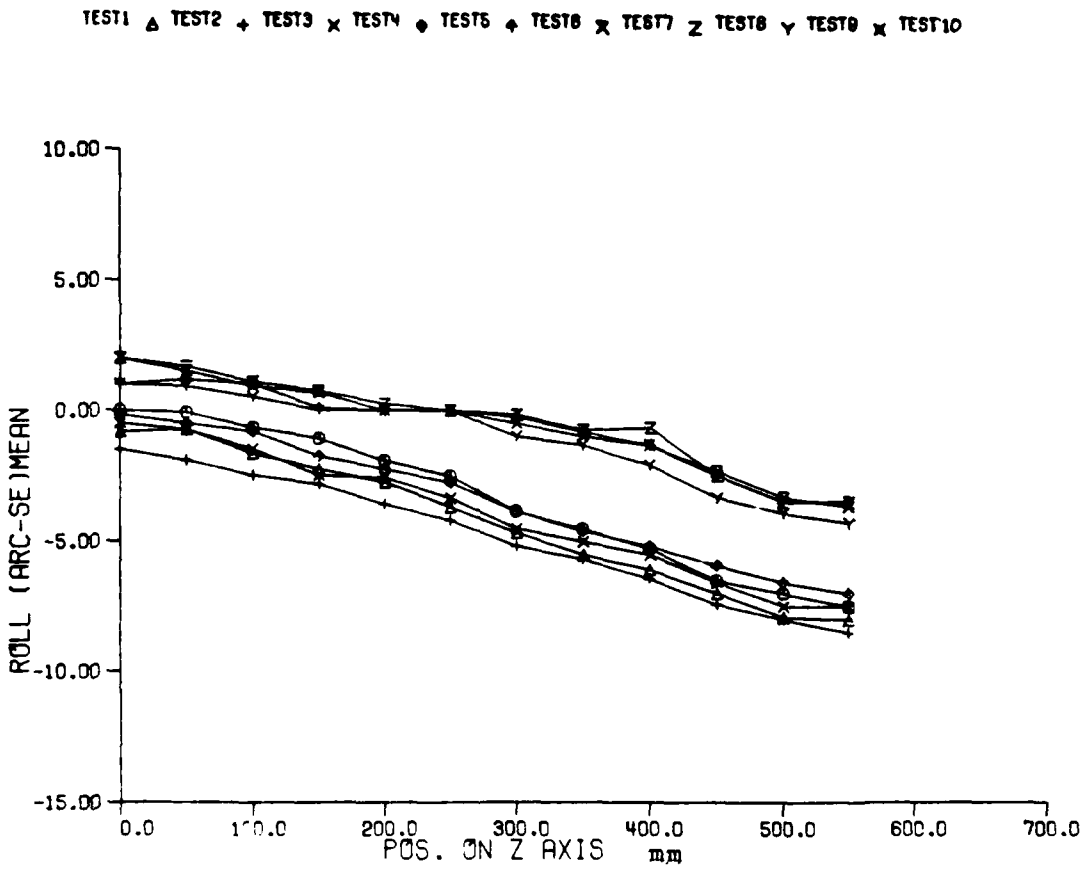
TEST1 △ TEST2 + TEST3 × TEST4 ● TEST5 ♦ TEST6 ✕ TEST7 Z TEST8 Y TEST9 ✕ TEST10
10.00
5.00
0.00
-5.00
-10.00
-15.00
ROLL (ARC-SE)MEAN
0.0
100.0
200.0
300.0
400.0
500.0
600.0
700.0
POS. ON Z AXIS mm

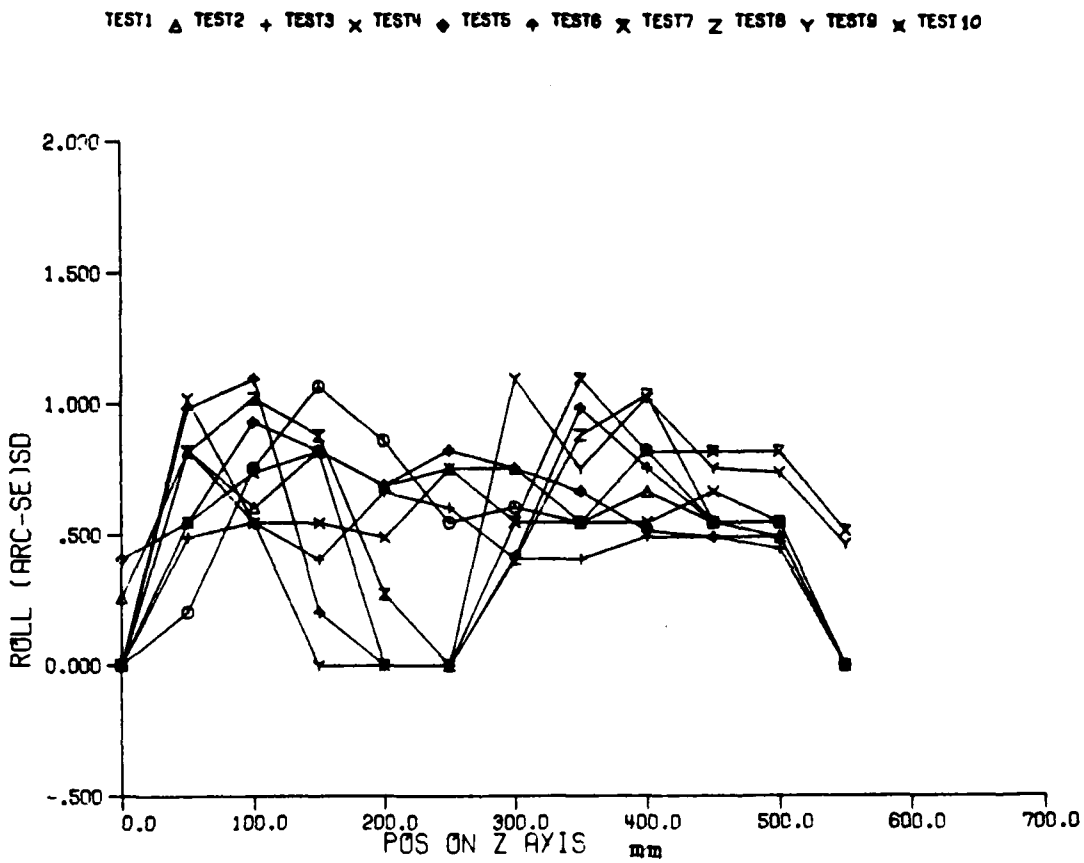
TEST1 TEST2 TEST3 TEST4 TEST5 TEST6 TEST7 TEST8 TEST9 TEST10
2.000
1.500
1.000
.500
0.000
-.500
ROLL (ARC-SEISD
0.0
100.0
200.0
300.0
400.0
500.0
600.0
700.0
POS ON Z AXIS mm

Z AXIS
RESULTS OF ROLL ERROR (arc-sec)

X axis at 140.000 mms
Y axis at 429.999 mms
Z axis at 24.999 mms
Ref is at + ve on right

Test # 1

POS	0.	50.	100.	150.	200.	250.
POS	300.	350.	400.	450.	500.	550.
TEMP	25.40		25.57	25.25	26.14	25.35	25.11
TEMP	25.18		25.23	25.38	25.38	25.48	25.48
TEMP	25.50		25.01	25.06	24.91	24.99	25.01
TEMP	25.31		24.96				
MEAN	0.		-0.08	-0.67	-1.08	-1.92	-2.50
MEAN	-3.83		-4.50	-5.25	-6.50	-7.00	-7.50
SD	0.		0.20	0.75	1.07	0.86	0.55
SD	0.61		0.55	0.82	0.55	0.55	0.

Test # 2

POS	0.	50.	100.	150.	200.	250.
POS	300.	350.	400.	450.	500.	550.
TEMP	26.00		27.58	26.23	28.31	25.89	25.55
TEMP	25.87		25.60	25.84	25.70	25.84	25.75
TEMP	25.75		25.30	25.60	25.21	25.33	25.28
TEMP	25.50		25.21				
MEAN	-0.83		-0.75	-1.67	-2.25	-2.75	-3.67
MEAN	-4.67		-5.50	-6.08	-7.00	-7.92	-8.00
SD	0.26		0.82	0.61	0.82	0.69	0.75
SD	0.75		0.55	0.66	0.55	0.49	0.

Test # 3

POS	0.	50.	100.	150.	200.	250.
POS	300.	350.	400.	450.	500.	550.
TEMP	26.63		31.20	28.48	31.42	26.86	26.37
TEMP	27.11		26.40	26.79	26.45	26.72	26.35
TEMP	26.37		25.94	26.55	25.69	25.96	25.81
TEMP	26.01		25.64				
MEAN	-1.50		-1.92	-2.50	-2.83	-3.58	-4.17
MEAN	-5.17		-5.67	-6.42	-7.42	-8.00	-8.50
SD	0.		0.49	0.55	0.41	0.66	0.61
SD	0.41		0.41	0.49	0.49	0.45	0.

Test # 4

POS	0.	50.	100.	150.	200.	250.
POS	300.	350.	400.	450.	500.	550.
TEMP	27.23		33.02	29.28	33.06	27.42	26.79
TEMP	27.82		26.84	27.40	26.99	27.31	26.74
TEMP	26.77		26.28	27.13	25.96	26.33	26.11
TEMP	26.25		25.91				
MEAN	-0.50		-0.75	-1.50	-2.50	-2.58	-3.33
MEAN	-4.50		-5.00	-5.50	-6.58	-7.50	-7.50
SD	0.		0.82	0.55	0.55	0.49	0.75
SD	0.55		0.55	0.55	0.66	0.55	0.

Test # 5

POS	0.	50.	100.	150.	200.	250.
POS	300.	350.	400.	450.	500.	550.
TEMP	27.03		33.91	30.14	33.45	27.70	27.06

TEMP	28.43	27.16	27.89	27.33	27.70	26.98
TEMP	27.04	26.50	27.60	26.16	26.65	26.35
TEMP	26.48	26.11				
MEAN	-0.17	-0.50	-0.83	-1.75	-2.25	-2.75
MEAN	-3.83	-4.58	-5.17	-5.92	-6.58	-7.00
SD	0.41	0.55	0.93	0.82	0.69	0.82
SD	0.75	0.66	0.52	0.49	0.49	0.

Test # 6

POS	0.	50.	100.	150.	200.	250.
POS	300.	350.	400.	450.	500.	550.
TEMP	25.70	33.79	30.01	34.78	27.28	27.04
TEMP	28.63	27.23	28.77	28.23	28.65	27.33
TEMP	27.31	26.08	27.14	25.64	26.03	26.21
TEMP	26.33	26.04				
MEAN	1.00	1.17	1.00	0.08	0.	0.
MEAN	-0.25	-0.83	-1.33	-2.50	-3.50	-3.50
SD	0.	0.98	1.10	0.20	0.	0.
SD	0.42	0.98	0.75	0.55	0.55	0.

Test # 7

POS	0.	50.	100.	150.	200.	250.
POS	300.	350.	400.	450.	500.	550.
TEMP	24.98	29.36	27.48	30.46	27.56	26.21
TEMP	27.29	26.45	27.24	27.87	28.24	27.09
TEMP	27.26	25.62	26.67	25.23	25.84	25.82
TEMP	26.53	25.62				
MEAN	2.00	1.50	0.92	0.67	0.	0.
MEAN	-0.50	-1.00	-1.33	-2.33	-3.33	-3.67
SD	0.	0.55	0.74	0.82	0.	0.
SD	0.55	1.10	0.82	0.82	0.82	0.52

Test # 8

POS	0.	50.	100.	150.	200.	250.
POS	300.	350.	400.	450.	500.	550.
TEMP	25.63	33.10	29.44	34.21	28.15	27.17
TEMP	28.66	27.59	28.66	28.32	28.73	27.49
TEMP	27.56	26.19	27.51	25.75	26.39	26.24
TEMP	26.51	25.97				
MEAN	2.00	1.67	1.08	0.75	0.25	0.
MEAN	-0.17	-0.75	-0.67	-2.50	-3.50	-3.50
SD	0	0.82	1.02	0.88	0.27	0.
SD	0.41	0.88	1.03	0.55	0.55	0.

Test # 9

POS	0.	50.	100.	150.	200.	250.
POS	300.	350.	400.	450.	500.	550.
TEMP	25.65	33.71	30.95	34.94	28.12	27.44
TEMP	28.66	27.86	28.91	28.37	28.66	27.54
TEMP	27.44	26.15	27.07	25.53	25.75	26.22
TEMP	26.32	25.88				
MEAN	1.00	0.92	0.50	0.	0.	0.
MEAN	-1.00	-1.33	-2.08	-3.33	-3.92	-4.30
SD	0.	1.02	0.55	0.	0.	0.
SD	1.10	0.75	1.02	0.75	0.74	0.46

ACTUAL DATA

						SPREAD Up	SPREAD Down
Test # 1							
0.	0.	0.	0.	0.	0.	0.	0.
0.	0.	0.	0.	0.	-0.50	0.08	-0.08
0.	-1.50	0.	-1.50	0.	-1.00	0.67	-0.67
0.	-1.50	0.	-2.50	-0.50	-2.00	0.92	-0.92
-1.00	-2.50	-1.00	-2.50	-1.50	-3.00	0.75	-0.75
-2.00	-3.00	-2.00	-3.00	-2.00	-3.00	0.50	-0.50
-3.50	-4.00	-3.00	-4.50	-3.50	-4.50	0.50	-0.50
-4.00	-5.00	-4.00	-5.00	-4.00	-5.00	0.50	-0.50
-4.50	-6.00	-4.50	-6.00	-4.50	-6.00	0.75	-0.75
-6.00	-7.00	-6.00	-7.00	-6.00	-7.00	0.50	-0.50
-6.50	-7.50	-6.50	-7.50	-6.50	-7.50	0.50	-0.50
-7.50	-7.50	-7.50	-7.50	-7.50	-7.50	0.	0.
Test # 2							
-0.50	-1.00	-1.00	-1.00	-1.00	-0.50	0.	0.
0	-1.50	0	-1.50	0.	-1.50	0.75	-0.75
-1.00	-2.50	-1.00	-2.00	-1.50	-2.00	0.50	-0.50
-1.50	-3.00	-1.50	-3.00	-1.50	-3.00	0.75	-0.75
-2.00	-3.50	-2.00	-3.50	-2.50	-3.00	0.58	-0.58
-3.00	-4.50	-3.00	-4.50	-3.00	-4.00	0.67	-0.67
-4.00	-5.50	-4.00	-5.50	-4.00	-5.00	0.67	-0.67
-5.00	-6.00	-5.00	-6.00	-5.00	-6.00	0.50	-0.50
-5.50	-6.50	-5.50	-6.50	-5.50	-7.00	0.58	-0.58
-6.50	-7.50	-6.50	-7.50	-6.50	-7.50	0.50	-0.50
-7.50	-8.50	-7.50	-8.50	-7.50	-8.00	0.42	-0.42
-8.00	-8.00	-8.00	-8.00	-8.00	-8.00	0.	0.
Test # 3							
-1.50	-1.50	-1.50	-1.50	-1.50	-1.50	0.	0.
-1.50	-2.50	-1.50	-2.50	-1.50	-2.00	0.42	-0.42
-2.00	-3.00	-2.00	-3.00	-2.00	-3.00	0.50	-0.50
-2.50	-3.00	-2.50	-3.00	-2.50	-3.50	0.33	-0.33
-3.00	-4.00	-3.00	-4.00	-3.00	-4.50	0.58	-0.58
-3.50	-5.00	-3.50	-4.50	-4.00	-4.50	0.50	-0.50
-4.50	-5.50	-5.00	-5.50	-5.00	-5.50	0.33	-0.33
-5.00	-6.00	-5.50	-6.00	-5.50	-6.00	0.33	-0.33
-6.00	-7.00	-6.00	-6.50	-6.00	-7.00	0.42	-0.42
-7.00	-8.00	-7.00	-7.50	-7.00	-8.00	0.42	-0.42
-7.50	-8.50	-7.50	-8.50	-8.00	-8.00	0.33	-0.33
-8.50	-8.50	-8.50	-8.50	-8.50	-8.50	0.	0.
Test # 4							
-0.50	-0.50	-0.50	-0.50	-0.50	-0.50	0	0
0.	-1.50	0	-1.50	0	-1.50	0.75	-0.75
-1.00	-2.00	-1.00	-2.00	-1.00	-2.00	0.50	-0.50
-2.00	-3.00	-2.00	-3.00	-2.00	-3.00	0.50	-0.50
-2.50	-3.00	-2.00	-3.00	-2.00	-3.00	0.42	-0.42
-2.50	-4.00	-2.50	-4.00	-3.00	-4.00	0.67	-0.67
-4.00	-5.00	-4.00	-5.00	-4.00	-5.00	0.50	-0.50
-4.50	-5.50	-4.50	-5.50	-4.50	-5.50	0.50	-0.50
-5.00	-6.00	-5.00	-6.00	-5.00	-6.00	0.50	-0.50
-6.00	-7.00	-6.00	-7.50	-6.00	-7.00	0.58	-0.58
-7.00	-8.00	-7.00	-8.00	-7.00	-8.00	0.50	-0.50

-7.50	-7.50	-7.50	-7.50	-7.50	-7.50	0.	0.
Test # 5							
-1.00	0.	0.	0.	0.	0.	-0.17	0.17
0.	-1.00	0.	-1.00	0.	-1.00	0.50	-0.50
0.	-1.50	0.	-1.50	0.	-2.00	0.83	-0.83
-1.00	-2.50	-1.00	-2.50	-1.00	-2.50	0.75	-0.75
-1.50	-3.00	-2.00	-3.00	-1.50	-2.50	0.58	-0.58
-2.00	-3.50	-2.00	-3.50	-2.00	-3.50	0.75	-0.75
-3.00	-4.50	-3.50	-4.50	-3.00	-4.50	0.67	-0.67
-4.00	-5.50	-4.00	-5.00	-4.00	-5.00	0.58	-0.58
-5.00	-5.50	-5.00	-5.00	-4.50	-6.00	0.33	-0.33
-5.50	-6.00	-5.50	-6.50	-5.50	-6.50	0.42	-0.42
-6.00	-7.00	-6.50	-7.00	-6.00	-7.00	0.42	-0.42
-7.00	-7.00	-7.00	-7.00	-7.00	-7.00	0.	0.
Test # 6							
1.00	1.00	1.00	1.00	1.00	1.00	0.	0.
2.00	0.	2.00	1.00	2.00	0.	0.83	-0.83
2.00	0.	2.00	0.	2.00	0.	1.00	-1.00
0.	0.	0.50	0.	0.	0.	0.08	-0.08
0.	0.	0.	0.	0.	0.	0.	0.
0.	0.	0.	0.	0.	0.	0.	0.
0.	0.	0.	-0.50	0.	-1.00	0.25	-0.25
0.	-2.00	0.	-1.00	0.	-2.00	0.83	-0.83
-0.50	-2.00	-1.00	-2.00	-0.50	-2.00	0.67	-0.67
-2.00	-3.00	-2.00	-3.00	-2.00	-3.00	0.50	-0.50
-3.00	-4.00	-3.00	-4.00	-3.00	-4.00	0.50	-0.50
-3.50	-3.50	-3.50	-3.50	-3.50	-3.50	0.	0.
Test # 7							
2.00	2.00	2.00	2.00	2.00	2.00	0.	0.
2.00	1.00	2.00	1.00	2.00	1.00	0.50	-0.50
1.50	0.	1.50	0.	1.50	1.00	0.58	-0.58
1.00	0.	2.00	0.	1.00	0.	0.67	-0.67
0.	0.	0.	0.	0.	0.	0.	0.
0.	0.	0.	0.	0.	0.	0.	0.
0.	-1.00	0.	-1.00	0.	-1.00	0.50	-0.50
0.	-2.00	0.	-2.00	0.	-2.00	1.00	-1.00
-1.00	-2.00	-1.00	-2.00	0.	-2.00	0.67	-0.67
-2.00	-3.00	-2.00	-3.00	-1.00	-3.00	0.67	-0.67
-3.00	-4.00	-3.00	-4.00	-2.00	-4.00	0.67	-0.67
-4.00	-4.00	-4.00	-4.00	-3.00	-3.00	0.	0.
Test # 8							
2.00	2.00	2.00	2.00	2.00	2.00	0.	0.
2.00	1.00	3.00	1.00	2.00	1.00	0.67	-0.67
2.00	0.50	2.00	0.	2.00	0.	0.92	-0.92
1.50	0.	1.00	0.	2.00	0.	0.75	-0.75
0.50	0.	0.50	0.	0.50	0.	0.25	-0.25
0.	0.	0.	0.	0.	0.	0.	0.
0.	0.	0.	0.	0.	-1.00	0.17	-0.17
0.	-1.00	0.	-1.50	0.	-2.00	0.75	-0.75
0.	-2.00	0.	-2.00	0.	0.	0.67	-0.67
-2.00	-3.00	-2.00	-3.00	-2.00	-3.00	0.50	-0.50
-3.00	-4.00	-3.00	-4.00	-3.00	-4.00	0.50	-0.50
-3.50	-3.50	-3.50	-3.50	-3.50	-3.50	0.	0.
Test # 9							
1.00	1.00	1.00	1.00	1.00	1.00	0.	0.
2.00	0.	2.00	0.	1.50	0.	0.92	-0.92
1.00	0.	1.00	0.	1.00	0.	0.50	-0.50
0.	0.	0.	0.	0.	0.	0.	0.
0.	0.	0.	0.	0.	0.	0.	0.
0.	0.	0.	0.	0.	0.	0.	0.

0.	-2.00	0.	-2.00	0.	-2.00	1.00	-1.00
-0.50	-2.00	-1.00	-2.00	-0.50	-2.00	0.67	-0.67
-1.00	-3.00	-1.00	-3.00	-1.50	-3.00	0.92	-0.92
-2.50	-4.00	-3.00	-4.00	-2.50	-4.00	0.67	-0.67
-3.50	-5.00	-3.50	-4.50	-3.00	-4.00	0.58	-0.58
-4.90	-4.90	-4.00	-4.00	-4.00	-4.00	0.	0.

Regression Equation

-0.02*Z + 1.29*T10 - 34.39

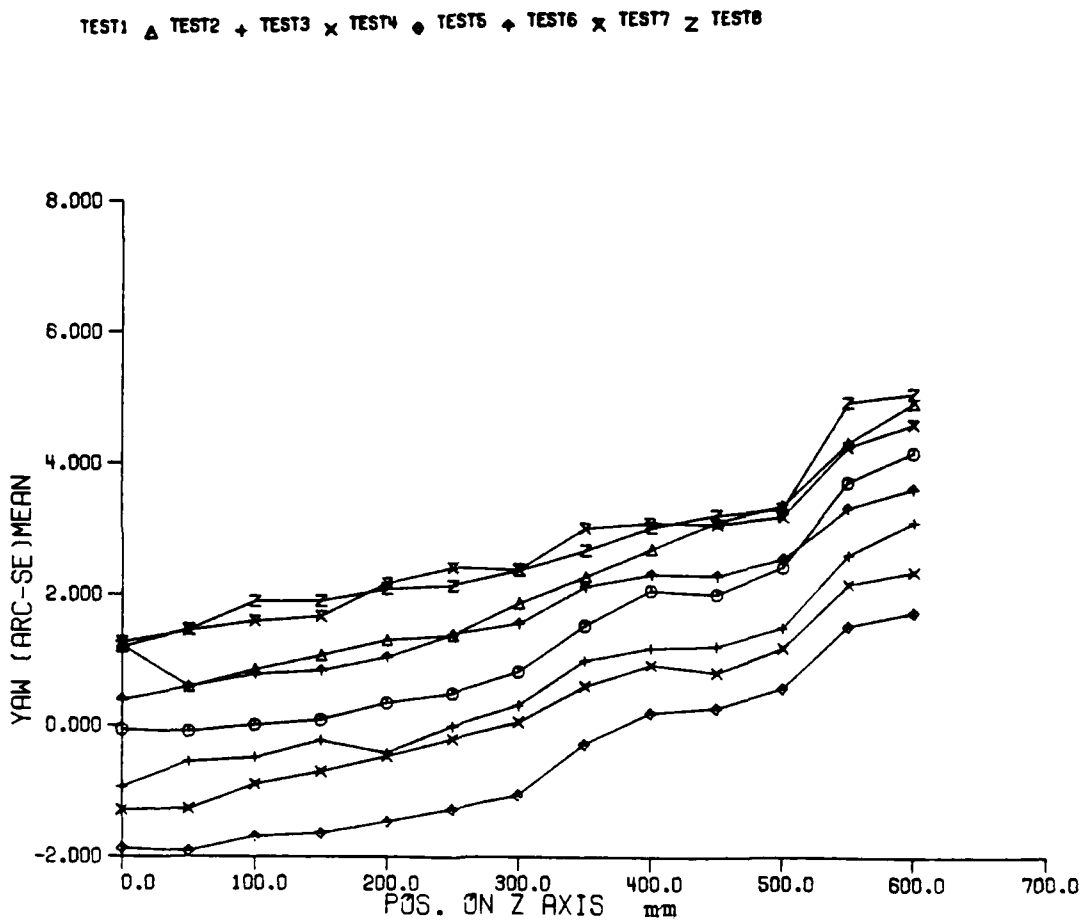
TEST1 TEST2 TEST3 TEST4 TEST5 TEST6 TEST7 TEST8
8.000
6.000
4.000
2.000
0.000
-2.000
YAW (ARC-SE)MEAN
0.0
100.0
200.0
300.0
400.0
500.0
600.0
700.0
POS. ON Z AXIS mm

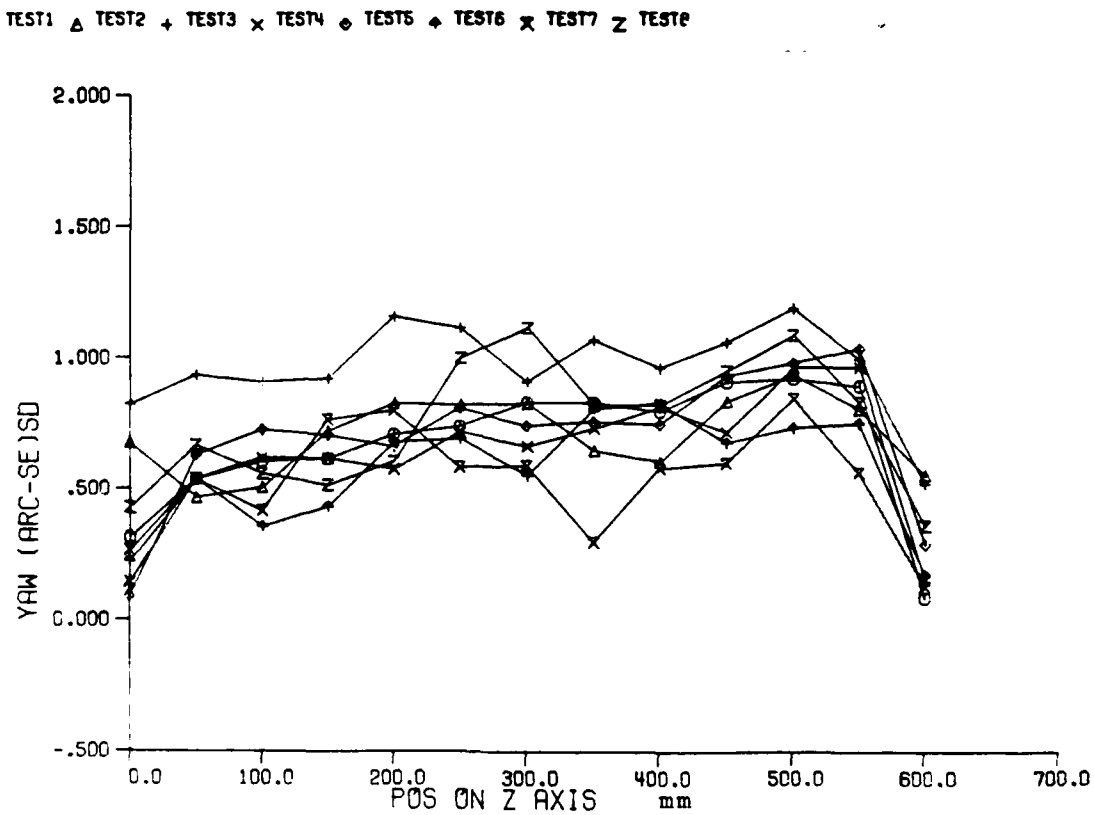
TEST1 △ TEST2 + TEST3 × TEST4 ⊕ TEST5 ◆ TEST6 ✱ TEST7 Z TEST8
2.000
1.500
1.000
.500
0.000
-.500
YAW (ARC-SEC)SD
0.0
100.0
200.0
300.0
400.0
500.0
600.0
700.0
POS ON Z AXIS mm

Z AXIS
RESULTS OF YAW ERROR (arc-sec)

X axis at 300.00 mms (indep)
Y axis at 300.00 mms (indep)
Z axis at 40.00 mms
Dir of laser R

Test # 1

POS	0.	50.	100.	150.	200.	250.	
POS	300.	350.	400.	450.	500.	550.	
POS	600.						
TEMP	29.50	29.86	29.30	30.73	29.49	28.74	
TEMP	29.08	28.74	29.10	28.61	28.79	28.76	
TEMP	28.74	28.74	28.96	28.49	28.64	28.57	
TEMP	28.59	28.35					
MEAN	-0.07	-0.09	0.01	0.09	0.35	0.51	
MEAN	0.83	1.54	2.07	2.02	2.43	3.73	
MEAN	4.19						
SD	0.31	0.54	0.60	0.62	0.71	0.74	0.83
SD	0.84	0.80	0.91	0.93	0.90	0.09	

Test # 2

POS	0.	50.	100.	150.	200.	250.	
POS	300.	350.	400.	450.	500.	550.	
POS	600.						
TEMP	29.38	30.13	29.49	31.95	29.40	28.94	
TEMP	29.40	29.01	29.47	29.08	29.25	29.16	
TEMP	29.11	28.74	28.94	28.50	28.62	28.72	
TEMP	28.77	28.55					
MEAN	1.22	0.60	0.86	1.09	1.33	1.39	
MEAN	1.88	2.28	2.71	3.14	3.38	4.34	
MEAN	4.95						
SD	0.68	0.47	0.51	0.72	0.83	0.82	0.83
SD	0.65	0.61	0.84	0.94	0.81	0.56	

Test # 3

POS	0.	50.	100.	150.	200.	250	
POS	300.	350.	400.	450.	500.	550.	
POS	600.						
TEMP	28.15	29.33	28.77	32.95	28.23	28.26	
TEMP	28.84	28.48	29.23	29.21	29.47	29.11	
TEMP	29.01	27.94	28.08	27.62	27.64	28.21	
TEMP	28.13	28.11					
MEAN	-0.94	-0.56	-0.49	-0.22	-0.41	0.	
MEAN	0.31	1.00	1.19	1.23	1.52	2.62	
MEAN	3.12						
SD	0.82	0.94	0.91	0.92	1.16	1.12	0.91
SD	1.07	0.97	1.07	1.20	1.00	0.53	

Test # 4

POS	0.	50.	100.	150.	200.	250.
POS	300.	350.	400.	450.	500.	550.
POS	600.					
TEMP	28.50	31.32	30.06	34.03	29.28	28.91
TEMP	29.69	29.21	29.86	29.64	29.96	29.55
TEMP	29.52	28.45	28.86	28.21	28.33	28.55
TEMP	28.77	28.38				
MEAN	-1.29	-1.27	-0.89	-0.70	-0.47	-0.20
MEAN	0.06	0.62	0.94	0.83	1.21	2.17

```
MEAN      2.36
SD        0.14      0.54      0.62      0.62      0.58      0.72      0.67
SD        0.74      0.82      0.72      0.97      0.97      0.16
Test #    5
----------
POS        0.   50.  100.  150.  200.  250
POS      300.  350.  400.  450.  500.  550.
POS      600.
TEMP          27.83     31.58     30.34     35.32     28.96     28.83
TEMP          29.79     29.15     30.05     29.88     30.34     29.59
TEMP          29.66     28.22     28.74     27.91     28.08     28.42
TEMP          28.69     28.32
MEAN     -1.88     -1.92     -1.69     -1.64     -1.46     -1.27
MEAN     -1.06     -0.28      0.20      0.28      0.59      1.54
MEAN      1.75
SD        0.09      0.63      0.73      0.71      0.67      0.81      0.75
SD        0.76      0.75      0.94      0.99      1.04      0.30
Test #    6
----------
POS        0.   50.  100.  150.  200.  250
POS      300.  350.  400.  450.  500.  550
POS      600.
TEMP          26.60     31.74     29.79     35.19     28.58     28.14
TEMP          29.41     28.14     29.31     30.26     30.84     29.50
TEMP          29.92     27.33     28.14     26.99     27.21     27.77
TEMP          28.40     27.65
MEAN      0.39      0.60      0.79      0.85      1.06      1.40
MEAN      1.57      2.13      2.32      2.31      2.57      3.34
MEAN      3.64
SD        0.22      0.54      0.36      0.43      0.68      0.70      0.56
SD        0.81      0.83      0.68      0.74      0.76      0.18
Test #    7
----------
POS        0.   50.  100.  150.  200.  250.
POS      300  350.  400.  450.  500.  550
POS      600.
TEMP          26.58     30.69     29.37     34.24     28.01     27.89
TEMP          29.18     28.45     29.74     29.76     30.39     29.18
TEMP          29.52     26.96     27.74     26.64     26.88     27.42
TEMP          28.20     27.37
MEAN      1.27      1.45      1.59      1.67      2.19      2.41
MEAN      2.39      3.02      3.10      3.09      3.21      4.27
MEAN      4.62
SD        0.26      0.54      0.42      0.77      0.80      0.59      0.59
SD        0.30      0.58      0.60      0.85      0.57      0.13
Test #    8
----------
POS        0   50.  100.  150.  200.  250.
POS      300.  350.  400.  450.  500.  550.
POS      600.
TEMP          25.70     31.14     29.41     35.22     27.85     27.73
TEMP          29.02     28.36     29.68     29.73     30.36     28.92
TEMP          29.24     26.65     27.41     26.31     26.50     27.14
TEMP          27.90     27.02
MEAN      1.20      1.47      1.90      1.91      2.10      2.15
MEAN      2.38      2.68      3.04      3.23      3.34      4.96
MEAN      5.09
SD        0.43      0.67      0.56      0.52      0.61      1.00      1.12
SD        0.82      0.83      0.95      1.09      0.84      0.37
```

ACTUAL DATA

						SPREAD Up	SPREAD Down
Test # 1							
0.12	-0.43	-0.43	0.24	0.24	-0.12	0.04	-0.04
-0.94	0.31	-0.43	0.16	-0.16	0.51	-0.42	0.42
-0.87	0.24	-0.47	0.63	-0.08	0.63	-0.49	0.49
-0.04	0.51	-0.63	0.63	-0.63	0.71	-0.52	0.52
-0.39	0.91	-0.24	0.94	-0.24	1.14	-0.64	0.64
0.12	1.42	-0.24	0.98	-0.31	1.06	-0.65	0.65
0	1.54	0.	1.73	0.24	1.50	-0.75	0.75
0.55	2.20	1.02	2.40	0.79	2.24	-0.75	0.75
1.30	2.17	1.50	3.07	1.42	2.99	-0.67	0.67
1.06	2.72	1.22	2.83	1.30	2.99	-0.83	0.83
1.73	2.91	1.42	3.31	1.69	3.54	-0.82	0.82
3.03	4.29	2.99	4.72	2.76	4.61	-0.81	0.81
4.17	4.17	4.09	4.09	4.29	4.29	0.00	0.00
Test # 2							
0.94	0.91	0.91	0.98	0.98	2.60	-0.28	0.28
0.04	0.94	0.20	1.22	0.35	0.83	-0.40	0.40
0.35	1.30	0.31	1.22	0.55	1.42	-0.45	0.45
0.31	1.54	0.16	1.81	0.98	1.73	-0.60	0.60
0.35	2.05	0.39	1.97	1.06	2.13	-0.72	0.72
0.67	2.01	0.31	2.17	1.02	2.17	-0.72	0.72
0.83	2.24	0.94	2.64	1.85	2.76	-0.67	[illegible]
1.69	2.95	1.50	2.91	1.93	2.72	-0.58	0.58
2.09	3.35	2.05	3.15	2.36	3.27	-0.54	0.54
2.13	3.90	2.36	3.78	2.68	3.98	-0.75	0.75
2.01	3.98	2.36	4.21	3.86	3.86	-0.64	0.64
3.39	5.00	3.35	5.16	4.88	4.29	-0.47	0.47
4.61	4.61	4.57	4.57	5.67	5.67	-0.00	-0.00
Test # 3							
-2.01	-1.26	-1.26	-0.79	-0.79	0.47	-0.41	0.41
-1.54	-0.28	-1.54	0.24	-0.94	0.71	-0.78	0.78
-1.30	-1.14	-1.06	0.47	-0.75	0.83	-0.54	0.54
-0.94	-0.63	-1.22	0.83	-0.35	0.98	-0.62	0.62
-1.57	-1.18	-1.22	0.94	-0.55	1.10	-0.70	0.70
-1.26	-0.51	-0.71	1.26	-0.28	1.50	-0.75	0.75
-0.63	0.	-0.20	1.14	-0.16	1.73	-0.64	0.64
0.08	0.87	0.	1.97	0.47	2.64	-0.82	0.82
0.24	0.71	0.43	2.17	1.02	2.60	-0.63	0.63
0.28	0.67	0.35	2.13	1.02	2.91	-0.68	0.68
0.35	1.22	0.39	2.72	1.18	3.23	-0.87	0.87
1.61	2.83	1.54	3.46	2.24	4.02	-0.82	0.82
2.64	2.64	2.95	2.95	3.78	3.78	0.	0.
Test # 4							
-1.26	-1.42	-1.42	-1.30	-1.30	-1.02	-0.04	0.04
-1.85	-1.02	-1.81	-0.75	-1.57	-0.63	-0.47	0.47
-1.69	-0.67	-1.38	-0.20	-1.18	-0.24	-0.52	0.52
-1.10	-0.31	-1.54	-0.04	-1.06	-0.12	-0.54	0.54
-0.83	0	-0.98	0.04	-1.14	0.12	-0.52	0.52
-0.91	0.63	-0.55	0.20	-1.02	0.47	-0.63	0.63
-0.67	0.71	-0.39	0.79	-0.55	0.47	-0.60	0.60
-0.20	1.34	0.24	1.18	-0.16	1.30	-0.66	0.66
0.24	1.50	0.28	1.97	0.12	1.54	-0.73	0.73
0.24	1.54	0.16	1.42	0.12	1.50	-0.66	0.66
0.24	2.32	0.47	2.09	0.31	1.85	-0.87	0.87

1.34	3.15	1.54	3.03	1.02	2.95	-0.87	0.87
2.56	2.56	2.20	2.20	2.32	2.32	0	0
Test # 5							
-1.93	-1.81	-1.81	-1.97	-1.97	-1.77	-0.03	0.03
-2.72	-1.42	-2.52	-1.85	-1.93	-1.06	-0.47	0.47
-2.60	-1.34	-2.13	-0.63	-2.17	-1.30	-0.60	0.60
-2.60	-0.91	-2.01	-1.42	-2.09	-0.83	-0.59	0.59
-2.40	-0.71	-1.65	-0.94	-2.01	-1.06	-0.56	0.56
-2.05	-0.87	-1.85	-0.55	-2.05	-0.24	-0.72	0.72
-1.93	-0.47	-1.65	-0.75	-1.50	-0.04	-0.64	0.64
-1.38	0.28	-0.75	0.43	-0.67	0.43	-0.66	0.66
-0.47	0.51	-0.51	1.42	-0.24	0.31	-0.61	0.61
-0.47	1.06	-0.79	1.10	-0.43	1.22	-0.85	0.85
-0.24	1.10	-0.43	1.61	-0.20	1.69	-0.88	0.88
0.35	2.09	0.87	2.80	0.63	2.48	-0.92	0.92
2.13	2.13	1.54	1.54	1.57	1.57	0	0
Test # 6							
-0.04	0.51	0.51	0.51	0.51	0.31	-0.06	0.06
-0.04	1.46	0.16	0.87	0.43	0.71	-0.41	0.41
0.24	1.18	0.79	1.18	0.71	0.67	-0.22	0.22
0.39	1.14	0.35	1.30	0.67	1.26	-0.38	0.38
0.20	1.06	0.31	1.57	1.34	1.89	-0.45	0.45
0.47	1.30	1.30	1.93	0.98	2.44	-0.49	0.49
1.22	1.65	1.30	1.85	0.91	2.48	-0.43	0.43
1.38	2.17	1.42	3.58	1.89	2.36	-0.57	0.57
1.57	2.64	1.22	2.76	2.20	3.50	-0.65	0.65
.69	2.72	1.89	2.91	1.54	3.11	-0.60	0.60
2.05	3.15	1.85	3.27	1.81	3.31	-0.67	0.67
2.99	3.82	2.40	4.17	2.64	4.02	-0.66	0.66
3.82	3.82	3.66	3.66	3.43	3.43	-0.00	-0.00
Test # 7							
1.10	1.10	1.10	1.61	1.61	1.10	-0.00	-0.00
1.06	1.42	1.65	2.28	0.71	1.57	-0.31	0.31
1.18	1.73	1.18	2.20	1.38	1.89	-0.35	0.35
0.79	2.64	0.98	1.77	1.38	2.48	-0.62	0.62
1.50	3.15	1.42	3.03	1.54	2.48	-0.70	0.70
1.61	3.03	2.40	2.87	1.81	2.76	-0.47	0.47
1.69	2.99	2.05	2.76	1.85	2.99	-0.52	0.52
2.83	3.15	2.72	3.03	2.83	3.54	-0.22	0.22
2.68	3.90	2.64	3.23	2.52	3.66	-0.49	0.49
2.24	3.74	2.76	3.62	2.72	3.46	-0.52	0.52
2.09	4.29	2.68	3.66	2.68	3.86	-0.73	0.73
4.06	4.92	3.58	4.69	3.70	4.69	-0.49	0.49
4.72	4.72	4.69	4.69	4.45	4.45	-0.00	-0.00
Test # 8							
1.65	0.67	0.67	1.46	1.46	1.30	0.06	-0.06
0.59	1.65	1.06	2.44	1.14	1.93	-0.54	0.54
1.22	2.32	1.30	2.28	1.73	2.52	-0.48	0.48
1.30	2.44	1.73	2.60	1.50	1.89	-0.40	0.40
1.69	2.60	1.69	2.60	1.30	2.72	-0.54	0.54
1.18	2.72	1.34	3.27	1.22	3.15	-0.90	0.90
1.10	2.91	1.89	3.94	1.30	3.11	-0.94	0.94
1.97	3.62	1.93	3.19	1.93	3.46	-0.74	0.74
2.36	3.23	2.32	3.82	2.32	4.17	-0.70	0.70
2.32	4.06	2.17	4.17	2.64	4.06	-0.86	0.86
2.60	4.49	2.01	4.33	2.48	4.13	-0.98	0.98
4.65	5.87	3.74	5.63	4.37	5.51	-0.71	0.71
5.55	5.55	4.76	4.76	4.96	4.96	0	0

Regression Equation

0.99e-5*Z*Z - 4.58*T20 + 1.05*T1 + 1.86*T19
+46.24

Appendix 4

Programs Used in the Analysis of Machine Tools

```
c THIS PROGRAM WILL SOLVE FOR THE UNSTEADY STATE
c HEAT CONDUCTION PROBLEM IN THE Z AXIS OF THE T10.
c FINITE DIFF. METHODS ARE USED.
c INPUT RQUIRED IS THE NOAL POINTS, HEAT SOURCES AND
c LOCATION OF HEAT SOURCES.
c THE PROGRAM IS WRITTEN FOR CYBER 205
c AND THE OUTPUT IS DIVERTED TO MAGTAPES ON
c CDC PURDUE MACE SYSTEM.
c THE STRUCTURE IS THICK WALLED
xxxxx,xxx,cy,11.
resource(jcat=s2,lp=2,tl=300)
fortran.
request,tapel/1000,rt=w.
request,abcd/1000,rt=w.
load.
go.
mflink(abcd,st=lm3,dd=c6,jcs=*
"access,alter,abcd,sl=1289,vpk=ceb",
"skipei,abcd","write,abcd")
#eor
      program main(input,output,tape5=input,tape6=output,tape7=tape7
     1 ,tapel=abcd)
      common nodel(1000),enode(1000),wnode(1000),nnode(1000),
     1 snode(1000),tnode(1000),bnode(1000),temp(1000),dxe(1000)
      common dxw(1000),dxn(1000),dxs(1000),dxt(1000),dxb(1000)
     1 ,templ(1000),noden(12,10,10),xval(12,10,10),yval(12,10,10)
     1 ,zval(12,10,10),indx,indy,indz
      common cond,rho,capa,tfin,tinc,rtemp,rtempi,num,numi,hval
      common qval(100),nqnode(100),nheat,idir(100)
      dimension rqval(100),tqval(100)
      integer nodel,enode,wnode,nnode,snode,tnode,bnode,noden,num
      integer old,nqnode,nheat,indx,indy,indz,numi
      real dxe,dxw,dxn,dxs,dxt,dxb,temp,templ,xval,yval,zval,cond
      real tfin,tinc,rtemp,rtempi,qval,rho,capa,hval
      indx     = 12
      indy     = 8
      indz     = 8
c     indx,indy,indz # OF POINTS ON X,Y AND Z DIRECTIONS
      old      = indx*indy*indz
      do 10 k = 1,10
      do 10 j = 1,10
      do 10 i = 1,12
      if(i.gt.indx) go to 10
      if(j.gt.indy) go to 10
      if(k.gt.indz) go to 10
      read(5,20) xval(i,j,k),yval(i,j,k),zval(i,j,k),noden(i,j,k)
 20   format(3f5.1,i4)
 10   continue
      cond = 8.91
      rho  = 7.85
```

```
      capa  = 0.11
      tnow = 0.0
      tfin = 360.0
      tinc = 15.0
      rtemp= 00.0
      hval = 0.011
      rtempi = rtemp
      nheat  = 9
c     nheat is # of heat source points
      do 50 i = 1,nheat
      read(5,60) qval(i),nqnode(i),tqval(i)
c     qval is value of heat source
c     nqnode is node associated with heat source
c     tqval is the value of change in heat source
c     to use steady heat source set tqval to zero
 60   format(f7.0,2i5,f7.0)
 50   continue
      do 199 i = 1,nheat
      rqval(i) = -qval(i)
 199  continue
      numi    = 0
      do 70 k = 1,10
      do 70 j = 1,10
      do 70 i = 1,12
      if(i.gt.indx) go to 70
      if(j.gt.indy) go to 70
      if(k.gt.indz) go to 70
      call ndegen(i,j,k)
c     sets nodal connectivities
 70    continue
      do 80 i = 1,old
      temp(i) = rtemp
      templ(i) = rtemp
 80   continue
      num = 0
      do 130 i = 1,old
      if(nodel(i).eq.0) then
      num = i-1
      go to 102
      endif
 130  continue
 102   ipr = 0
      ntemp = int(tfin/tinc)
      do 90 i = 1,ntemp
      write(1,113) i
 113  format(i10)
      call nxtmp
      do 100 j = 1,old
      temp(j)  = templ(j)
 100  continue
      rtempi = rtemp
      if(numi.gt.0) call inner
c     inner calculates the cavity temperature
c     based on the wall temperatures
c     it is the average of wall temperatures
```

```
      ipr = ipr +1
      if(ipr.eq.1 ) then
      call wrnd(tnow)
      call wrele
      ipr = 0
      endif
      do 197 j = 1,nheat
      qval(j) =qval(j)+rqval(j)
      rqval(j) = -rqval(j)
      write(6,196) qval(j),rqval(j),j
196   format(2f10.4,i10)
197   continue
       if(i.eq.5) then
       do 191 j = 1,nheat
       qval(j) = qval(j)+tqval(j)
       rqval(j)=-qval(j)
       write(6,196) qval(j),rqval(j),j
191    continue
       endif
90    continue
      stop
      end
c
c
c
c
c
c
c
      subroutine ndegen(i,j,k)
      common node1(1000),enode(1000),wnode(1000),nnode(1000),
     1 snode(1000),tnode(1000),bnode(1000),temp(1000),dxe(1000)
      common dxw(1000),dxn(1000),dxs(1000),dxt(1000),dxb(1000)
     1 ,temp1(1000),noden(12,10,10),xval(12,10,10),yval(12,10,10)
     1 ,zval(12,10,10),indx,indy,indz
      common cond,rho,capa,tfin,tinc,rtemp,rtemp1,num,numi,hval
      common qval(100),nqnode(100),nheat,idir(100)
      integer node1,enode,wnode,nnode,snode,tnode,bnode,noden,num
      integer old,nqnode,nheat,indx,indy,indz,numi
      real dxe,dxw,dxn,dxs,dxt,dxb,temp,temp1,xval,yval,zval,cond
      real tfin,tinc,rtemp,rtemp1,qval,rho,capa,hval
      integer oc,oe,ow,on,os,ot,ob
c     generates nodal connectivities
      oc = 0
      oe = 0
      ow = 0
      on = 0
      os = 0
      ot = 0
      ob = 0
      oc = noden(i,j,k)
      if(oc.eq.0) return
      if(i.eq.indx) then
      oe= -1
      dxe(oc) = dxe(oc-1)
      else
```

```
      if(noden(i+1,j,k).eq.0) oe = -2
      if(noden(i+1,j,k).ne.0) oe = noden(i+1,j,k)
      dxe(oc) = xval(i+1,j,k)-xval(i,j,k)
      endif
      if(i.eq.1) then
      ow = -1
      if(oc.gt.1) dxw(oc) = dxw(oc-1)
      if(oc.eq.1) dxw(oc) = 8.0
      else
      if(noden(i-1,j,k).eq.0) ow = -2
      if(noden(i-1,j,k).ne.0) ow = noden(i-1,j,k)
      dxw(oc) = xval(i,j,k) - xval(i-1,j,k)
      endif
      if(j.eq.indy) then
      on = -1
      dxn(oc) = dxn(oc-1)
      else
      if(noden(i,j+1,k).eq.0) on = -2
      if(noden(i,j+1,k).ne.0) on = noden(i,j+1,k)
      dxn(oc) = yval(i,j+1,k)-yval(i,j,k)
      endif
      if(j.eq.1) then
      os = -1
      if(oc.gt.1) dxs(oc) = dxs(oc-1)
      if(oc.eq.1) dxs(oc) = 8.0
      else
      if(noden(i,j-1,k).eq.0) os = -2
      if(noden(i,j-1,k).ne.0) os = noden(i,j-1,k)
      dxs(oc) = yval(i,j,k)-yval(i,j-1,k)
      endif
      if(k.eq.indz) then
      ot = -1
      dxt(oc) = dxt(oc-1)
      else
      if(noden(i,j,k+1).eq.0) ot = -2
      if(noden(i,j,k+1).ne.0) ot = noden(i,j,k+1)
      dxt(oc) = zval(i,j,k+1) - zval(i,j,k)
      endif
      if(k.eq.1) then
      ob = -3
      if(oc.gt.1) dxb(oc) = dxb(oc-1)
      if(oc.eq.1) dxb(oc) = 8.0
      else
      if(noden(i,j,k-1).eq.0) ob = -2
      if(noden(i,j,k-1).ne.0) ob = noden(i,j,k-1)
      dxb(oc) = zval(i,j,k)- zval(i,j,k-1)
      endif
      node1(oc) = oc
      enode(oc) = oe
      wnode(oc) = ow
      nnode(oc) = on
      snode(oc) = os
      tnode(oc) = ot
      bnode(oc) = ob
      if(oe.eq.-2.or.ow.eq.-2.or.on.eq.-2.or.os.eq.-2.or.
     1 ot.eq.-2.or.ob.eq.-2) numi = numi+1
```

```
      return
      end
c
c
c
c
c
      subroutine nxtmp
      common nodel(1000),enode(1000),wnode(1000),nnode(1000),
     1 snode(1000),tnode(1000),bnode(1000),temp(1000),dxe(1000)
      common dxw(1000),dxn(1000),dxs(1000),dxt(1000),dxb(1000)
     1 ,templ(1000),noden(12,10,10),xval(12,10,10),yval(12,10,10)
     1 ,zval(12,10,10),indx,indy,indz
      common cond,rho,capa,tfin,tinc,rtemp,rtempi,num,numi,hval
      common qval(100),nqnode(100),nheat,idir(100)
      integer nodel,enode,wnode,nnode,snode,tnode,bnode,noden,num
      integer old,nqnode,nheat,indx,indy,indz,numi
      real dxe,dxw,dxn,dxs,dxt,dxb,temp,templ,xval,yval,zval,cond
      real tfin,tinc,rtemp,rtempi,qval,rho,capa,hval
      alpha = 1.
      do 10 j = 1,100
      call solve(1,alpha,j)
      if(j.gt.90) then
      write(6,100) templ(1),templ(100),templ(200)
      write(6,100) templ(300),templ(400),templ(500)
 100  format(3f10.3)
c     THE VALUES ARE WRITTEN TO ENSURE CONVERGENCE
      endif
 10   continue
      return
      end
c
c
c
c
c
c
c
c
      subroutine solve(i,alpha,iij)
      common nodel(1000),enode(1000),wnode(1000),nnode(1000),
     1 snode(1000),tnode(1000),bnode(1000),temp(1000),dxe(1000)
      common dxw(1000),dxn(1000),dxs(1000),dxt(1000),dxb(1000)
     1 ,templ(1000),noden(12,10,10),xval(12,10,10),yval(12,10,10)
     1 ,zval(12,10,10),indx,indy,indz
      common cond,rho,capa,tfin,tinc,rtemp,rtempi,num,numi,hval
      common qval(100),nqnode(100),nheat,idir(100)
      integer nodel,enode,wnode,nnode,snode,tnode,bnode,noden,num
      integer old,nqnode,nheat,indx,indy,indz,numi
      real dxe,dxw,dxn,dxs,dxt,dxb,temp,templ,xval,yval,zval,cond
      real tfin,tinc,rtemp,rtempi,qval,rho,capa,hval
      real temp2,temp3,temp4,temp5,temp6,temp7
      real delxy,delxyz,delyz,delxz,ae,aw,an,as,at,ab
      real aop,ap,q,b
      integer i,j,k,l
```

```
c       does the solving part
        old = indx*indy*indz
        hvali = 0.001949
 1      do 10 j = 1,num
        delyz = (dxn(j)+dxs(j))*(dxt(j)+dxb(j))/4.0
        delxz = (dxe(j)+dxw(j))*(dxt(j)+dxb(j))/4.0
        delxy = (dxe(j)+dxw(j))*(dxn(j)+dxs(j))/4.0
        delxyz = (dxe(j)+dxw(j))*(dxn(j)+dxs(j))*(dxt(j)+dxb(j))/8.0
        aop = rho*capa*delxyz/tinc
        q = 0.0
        do 20 k = 1,nheat
        if(nqnode(k).eq.nodel(j)) then
        q = qval(k)
        endif
 20     continue
        b = q + aop*temp(j)
        if(enode(j).lt.0 ) then
        if(enode(j).eq.-1) then
        temp2 = rtemp
        ae = hval*delyz
        endif
        if(enode(j).eq.-2) then
        ae = hvali * delyz
        temp2 = rtempi
        endif
        endif
        if(enode(j).gt.0) then
        temp2 = templ(enode(j))
        ae = cond*delyz/dxe(j)
        endif
        if(wnode(j).lt.0 ) then
        if(wnode(j).eq.-1) then
        temp3 = rtemp
        aw = hval*delyz
        endif
        if(wnode(j).eq.-2) then
        temp3 = rtempi
        aw =  hval*delyz
        endif
        endif
        if(wnode(j).gt.0 ) then
        temp3 = templ(wnode(j))
        aw = cond*delyz/dxw(j)
        endif
        if(nnode(j).lt.0 ) then
        if(nnode(j).eq.-1) then
        temp4 = rtemp
        an  = hval * delxz
        endif
        if(nnode(j).eq.-2) then
        temp4 = rtempi
        an = hvali*delxz
        endif
        endif
        if(nnode(j).gt.0)  then
        temp4 = templ(nnode(j))
```

```
      an = cond*delxz/dxn(j)
      endif
      if(snode(j).lt.0 )then
      if(snode(j).eq.-1) then
      temp5 = rtemp
      as    = hval * delxz
      endif
      if(snode(j).eq.-2) then
      as = hvali * delxz
      temp5 = rtempi
      endif
      endif
      if(snode(j).gt.0) then
      temp5 = templ(snode(j))
      as = cond*delyz/dxs(j)
      endif
      if(tnode(j).lt. 0) then
      if(tnode(j).eq.-1) then
      temp6 = rtemp
      at = hval * delxy
      endif
      if(tnode(j).eq.-2) then
      temp6 = rtempi
      at = hvali * delxy
      endif
      endif
      if(tnode(j).gt.0)  then
      temp6 = templ(tnode(j))
      at = cond*delxy/dxt(j)
      endif
      if(bnode(j).lt.0 ) then
      if(bnode(j).eq.-1) then
      temp7 = rtemp
      ab = hval * delxy
      endif
      if(bnode(j).eq.-2) then
      temp7 = rtempi
      ab = hvali * delxy
      endif
      if(bnode(j).eq.-3) then
      temp7 = templ(tnode(j))
      ab    = cond*delxy/dxb(j)
      endif
      endif
      if(bnode(j).gt.0)  then
      temp7 = templ(bnode(j))
      ab = cond*delxy/dxb(j)
      endif
      ap  = ae+aw+an+as+at+ab+aop
      ik  = nodel(j)
      templ(ik) = ae*temp2+aw*temp3+an*temp4
     1 +as*temp5 + at*temp6 + ab*temp7+ b
      all       = templ(ik)/ap
      templ(ik) = temp(ik) + alpha*(all-temp(ik))
10    continue
      return
      end
```

```
c
c
c
c
c
c
c
c
c
c
      subroutine inner
      common nodel(1000),enode(1000),wnode(1000),nnode(1000),
     1 snode(1000),tnode(1000),bnode(1000),temp(1000),dxe(1000)
      common dxw(1000),dxn(1000),dxs(1000),dxt(1000),dxb(1000)
     1 ,templ(1000),noden(12,10,10),xval(12,10,10),yval(12,10,10)
     1 ,zval(12,10,10),indx,indy,indz
      common cond,rho,capa,tfin,tinc,rtemp,rtempi,num,numi,hval
      common qval(100),nqnode(100),nheat,idir(100)
      integer nodel,enode,wnode,nnode,snode,tnode,bnode,noden,num
      integer old,nqnode,nheat,indx,indy,indz,numi
      real dxe,dxw,dxn,dxs,dxt,dxb,temp,templ,xval,yval,zval,cond
      real tfin,tinc,rtemp,rtempi,qval,rho,capa,hval
c     CALCULATES CAVITY TEMP. AS AVG. OF ALL WALL TEMPS.
      rtempi = 0.0
      do 10 j = 1, num
      if(enode(j).eq.-2.or.wnode(j).eq.-2.or.snode(j).eq.-2.
     1 or.nnode(j).eq.-2.or.tnode(j).eq.-2.or.bnode(j).eq.-2) then
      rtempi = rtempi+ templ(j)
      endif
 10   continue
      rtempi = rtempi/numi
      return
      end
c
c
c
c
c
c
c THE REMAINING  PORTION SETS THE DATA FOR SAP V
c
c
      subroutine wrele
      common nodel(1000),enode(1000),wnode(1000),nnode(1000),
     1 snode(1000),tnode(1000),bnode(1000),temp(1000),dxe(1000)
      common dxw(1000),dxn(1000),dxs(1000),dxt(1000),dxb(1000)
     1 ,templ(1000),noden(12,10,10),xval(12,10,10),yval(12,10,10)
     1 ,zval(12,10,10),indx,indy,indz
      common cond,rho,capa,tfin,tinc,rtemp,rtempi,num,numi,hval
      common qval(100),nqnode(100),nheat,idir(100)
      integer nodel,enode,wnode,nnode,snode,tnode,bnode,noden,num
      integer old,nqnode,nheat,indx,indy,indz,numi
      real dxe,dxw,dxn,dxs,dxt,dxb,temp,templ,xval,yval,zval,cond
      real tfin,tinc,rtemp,rtempi,qval,rho,capa,hval
```

```
      i = 5
      j =  304
      k = 1
      l = 1
      write(1,10) i,j,k,l
10    format(4i5)
      i = 1
       la = 2100000000
      pr  = 0.3
      rho = 7.85
      te  = 0.0000117
      write(1,20) i,la,pr,rho,te
20    format(i5,i10,f10.2,f10.5,f10.8)
      i = 1
      aj = 0.
      write(1,30) i,aj,aj
30    format(i5,2f10.2)
      ai = 0
      aj = 0
      ak = 0
      al = 0
      write(1,40) ai,aj,ak,al
40    format(4f10.2)
      ai = 1
      aj = 0.
      ak = 0.
      al = 0.
      write(1,40) ai,aj,ak,al
      ai = 0.
      write(1,40) ai,aj,ak,al
      ai =0.
      aj = 0.
      ak = 0.
      al = 0.
      write(1,40) ai,aj,ak,al
      aj = 1.
      write(1,40) ai,aj,ak,al
      ienum = 0
      do 60 k = 1,10
      do 60 j = 1,10
      do 60 i = 1,12
      if(i.gt.indx-1) go to 60
      if(j.gt.indy-1) go to 60
      if(k.gt.indz-1) go to 60
      n1 = noden(i,j,k)
      n2 = noden(i+1,j,k)
      n3 = noden(i+1,j+1,k)
      n4 = noden(i,j+1,k)
      n5 = noden(i,j,k+1)
      n6 = noden(i+1,j,k+1)
      n7 = noden(i+1,j+1,k+1)
      n8 = noden(i,j+1,k+1)
      io = 2
      mn = 1
      ip = 1
      sft = rtemp
```

```
      if(n1.eq.0.or.n2.eq.0.or.n3.eq.0.or.n4.eq.0.or.n5.eq.0.or.
     1 n6.eq.0.or.n7.eq.0.or.n8.eq.0) go to 60
      ienum = ienum + 1
      write(1,70) ienum,n1,n2,n3,n4,n5,n6,n7,n8,io,mn,ip,sft
70    format(12i5,10x,f10.2)
60    continue
      i = 6
      j =   40
      k = 1
      write(1,110) i,j,k
110   format(3i5)
      i = 2
      rho = 7.8
      te = 0.0000117
      write(1,120) i,rho,te,te,te
120   format(i10,10x,f10.3,10x,3f10.8)
      la = 2100000000
      pr  = 0.3
      write (1,130) la,pr
130   format(i10,f10.2)
      ai = 0.
      aj = 0.
      ak = 0.
      al = 0.
      write(1,140) ai,aj,ak,al
140   format(4f10.0)
      ai = 1.0
      write(1,140) ai,aj,ak,al
      ai = 0.
      write(1,140) ai,aj,ak,al
      write(1,140) ai,aj,ak,al
      aj = 981.
      write(1,140) ai,aj,ak,al
      ip1 = (indx-3)/3
      ip1 = ip1 + 2
      ip2 = ip1 + 3
      ienum = 0
      do 150 k = 1,10
      do 150 j = 1,10
      do 150 l = 1,2
      if(l.eq.1) i = ip1
      if(l.eq.2) i = ip2
      if(k.gt.indz-1) go to 150
      if(j.ge.2.and.j.le.indy-2) then
      if(k.ge.2.and.k.le.indz-3) then
      n1 = noden(i,j,k)
      n2 = noden(i,j+1,k)
      n3 = noden(i,j+1,k+1)
      n4 = noden(i,j,k+1)
      if(n1.eq.0.or.n2.eq.0.or.n3.eq.0.or.n4.eq.0) go to 150
      ienum = ienum + 1
      mi = 2
      ie = 1
      et =2.0
      dl =0.0
      sft = rtemp
      tgr =0.0
```

```
      write(1,160) ienum,n1,n2,n3,n4,mi,ie,et,dl,sft,tgr
160   format(5i5,5x,2i5,4f10.0)
      endif
      endif
150   continue
      write(1,201)
201   format(2x)
      af = 1
      aj = 1
      ak = 0
      al = 0
      write(1,80) ai,aj,ak,al
80    format(4f10.0)
      write(1,201)
      write(1,201)
      return
      end
c
c
c
c
c
c
c
      subroutine wrnd(tnow)
      common nodel(1000),enode(1000),wnode(1000),nnode(1000),
     1snode(1000),tnode(1000),bnode(1000),temp(1000),dxe(1000)
      common dxw(1000),dxn(1000),dxs(1000),dxt(1000),dxb(1000)
     1,templ(1000),noden(12,10,10),xval(12,10,10),yval(12,10,10)
     1,zval(12,10,10),indx,indy,indz
      common cond,rho,capa,tfin,tinc,rtemp,rtempi,num,numi,hval
      common qval(100),nqnode(100),nheat,idir(100)
      integer nodel,enode,wnode,nnode,snode,tnode,bnode,noden,num
      integer old,nqnode,nheat,indx,indy,indz,numi
      real dxe,dxw,dxn,dxs,dxt,dxb,temp,templ,xval,yval,zval,cond
      real tfin,tinc,rtemp,rtempi,qval,rho,capa,hval
      j = 1
      ij = 2
      k = 0
      g = 981.
      write(1,10) num,ij,j,k,k,k,k,k,k,k,k,k,k,k,k,g
10    format(4i5,i4,i1,4i5,2x,3i1,3i5,5x,f10.0)
      do 20 k = 1,10
      do 20 j = 1,10
      do 20 i = 1,12
      if(i.gt.indx) go to 20
      if(j.gt.indy) go to 20
      if(k.gt.indz) go to 20
      ind = noden(i,j,k)
      if(ind.eq.0) go to 20
      if(bnode(ind).eq.-3) then
      itb1 = 1
      itb2 = 1
      itb3 = 1
      else
```

```
      itb1 = 0
      itb2 = 0
      itb3 = 0
      endif
      itb4 = 1
      itb5 = 1
      itb6 = 1
      ix = 1
      if(enode(ind).lt.0.and.wnode(ind).lt.0) then
      itb4 = 0
      itb5 = 0
      itb6 = 0
      endif
      write(1,30) ind,itb1,itb2,itb3,itb4,itb5,itb6,xval(i,j,k),
     1 yval(i,j,k),zval(i,j,k),ix,temp1(ind)
 30   format(1x,i4,1x,i4,5i5,3f10.2,1x,i4,f10.2)
 20   continue
      return
      end
#eor
```

```
c       FOR THERMAL SOLUTION, SEQUENCE OF PROGRAMS
c
c       REQUIRED :
c
c       { SEQUENCE HAS BEEN GIVEN ONLY FOR THE X AXIS.
c
c       ALL OTHER AXIS ARE THE SAME.
c
c       ON OTHER AXIS,
c
c       CHANGES REQUIRED WILL BE IN DISCRETIZATION
c
c       AND IN NODAL COHNNECTIVITIES }
c
c       THIS SEQUENCE WILL SOLVE
c
c       THE HEAT TRANSFER PROBLEM
c
c       INPUT IS
c
c       A SET OF MEASURED TEMPERATURE VALUES AND
c
c       ASSOCIATED NODAL NUMBERS
c
c       A SCALING FACTOR IS USED THROUGHOUT THE WHOLE
c
c       SEQUENCE OF THIS PROGRAM, THE SCALE IS 0.1
c
c       THE SEQUENCE OF PROGRAMS THAT NEED TO BE EXECUTED
c
c       TO OBTAIN THE THERMAL PROFILE OF ANY AXIS ARE AS FOLLOWS
c
c       {{DISCLAIMER:: ALL PROGRAMS WORK AS THEY HAVE BEEN SET UP,
c
c       CHANGE OF CONSTANTS AND VARIABLES MAY CAUSE THEM TO BECOME
c
c       UNRELIABLE}}
c
c
c                 -----------------
c                     DISCRETIZE
c                     STRUCTURE
c                 -----------------
c
c                         |
c
c                 ------------------
c                     OBTAIN ELEMENT
c                     CONNECTIVITIES
c                     FOR FEM
c                 ------------------
c
c                         |
c
c                 ------------------
c                     SOLVE THE FEM
c                     MATRIX
c                 ------------------
c
c
c
c
```

```
c       c                                       c
c       c     PROGRAM   FOR    DISCRETIZATION    c
c       c                                       c
c       c       OF    X AXIS OF  THE            c
c       c                                       c
c       c             MACHINE                   c
c       c                                       c
c       cccccccccccccccccccccccccccccccccccccccc
c
c
c
c       ****************************************
c       *                                      *
c       *THIS PROGRAM EXECUTES ON A VAX PDP-11/40*
c       *                                      *
c       *       To execute this program        *
c       *                                      *
c       *        ( NO INPUT REQUIRED)          *
c       *                                      *
c       *  To execute type in f77. "program name"*
c       *                                      *
c       *  After "a.out" has been generated then *
c       *                                      *
c       *  "a.out > filename", will produce the  *
c       *                                      *
c       *     output files of the structure    *
c       *                                      *
c       ****************************************
c
c       TO CHANGE THE NUMBER OF NODES
c       CHANGE THE VARIABLES, nptx,npty,nptz
c       EACH OF THE VARIABLES,nptx,npty,nptz
c       REFER TO THE NUMBER OF NODES IN EACH
c       DIRECTION.
c       WHEN nptx,npty,nptz ARE CHANGED,
c       CHANGE THE VALUE IN LINE # 148
        real x,y,z,xpl1,xpl2,xdr1,xdr2,xdr3,const,
     1  ydr1,ydr2,zdr1,zdr2,elx1,ely1,elz1,gdcs,xval(20)
        integer nptx,npty,nptz,nxr1,nxr2,nxr3,nyr1,nyr2,nzr1,nzr2,nzr3,
     1  i,elnum,ndnum,cord1,cord2,cord3,
     1  cord4
        common /base2/ x,y,z,xpl1,xpl2,xdr1,xdr2,
     1  xdr3,ydr1,ydr2,zdr1,zdr2,zdr3,nptx,npty,nptz,nxr1,nxr2,nxr3,nyr1,
     1  nyr2,nyr3,nzr1,nzr2,nzr3,elx1,ely1,elz1
        common /base1/ cord1(300),cord2(300),cord3(300),cord4(300),
     1  gdcs(300,7)
        common /base4/elnum,ndnum
        const = 0.1
c       x,y,z are the distances in directions x,y,z
        x = 172.0*const
        y =  60.0*const
        z =  50.0*const
c       # of points in x,y,z
        nptx   =  12
        npty   = 4
        nptz   = 4
c       loaction of internal plates on x axis
        xval(1) = 0.*const
        xval(2) = 14.*const
```

```
      xval(3) = 26.*const
      xval(4) = 38.*const
      xval(5) = 53.*const
      xval(6) = 68.*const
      xval(7) = 86.*const
      xval(8) = 104.*const
      xval(9) = 119.*const
      xval(10) = 1[illegible].*const
      xval(11) = 146.*const
      xval(12) = 158.*const
      xval(13) = 172.*const
c     determines number of divisions on axis
c     does not work in x axis as division has
c     been set up above
      nyr1  = int((30.0*const/y)*npty)
      nyr2  = npty - nyr1
      nzr1 = int((z-25.0*const)/z * nptz)
      nzr2  = nptz - nzr1
      ydr1  = (30.0*const)/nyr1
      ydr2  = (y-30.0*const)/nyr2
      zdr1  = 25.0*const/nzr1
      zdr2  = (z-25.0*const)/nzr2
      nxr1  = 13
      write(6,*) nxr1
      do 102 i = 1,13
      write(6,*) xval(i)
 102  continue
c     input to the nodal connectivities program
      write(6,*) x,y,z
      write(6,*)ydr1,ydr2
      write(6,*)zdr1,zdr2
      write(6,*)nptx,npty,nptz
      write(6,*)nxr1,nxr2,nxr3
      write(6,*)nyr1,nyr2
      write(6,*)nzr1,nzr2
      print*,'307'
c     NUMBER OF NODES
      elnum = 1
      ndnum = 1
      elx1  = 0.
      ely1  = 0.
      elz1  = 0.
      ndnum = 1
c     the discretization is done on a plane by plane
c     basis.
      call planexy(1,xval)
      do 105 i = 1,13
      if(i.eq.5.or.i.eq.7) go to 105
      elx1  = xval(i)
      ely1  = 0.0
      elz1  = zdr1
      call planeyz(xval)
 105  continue
      elx1  = xval(2)
      ely1  = 0.0
      elz1  = zdr1
```

```
      call planexz(xval)
      elxl  = xval(2)
      elyl  = y
      elzl  = zdrl
      call planexz(xval)
      elxl  = 0.0
      elyl  = 0.0
      elzl  = z
      call planexy(2,xval)
      elxl  = xdrl
      elyl  =30.0*const
      elzl  = 25.0*const
      write(6,*)ndnum-1
      stop
      end
c
c
c
      subroutine planexy(ind,xval)
      real x,y,z,xpl1,xpl2,xdr1,xdr2,xdr3,
     1 ydr1,ydr2,zdr1,zdr2,elx1,ely1,elz1,gdcs,xval(20)
      integer nptx,npty,nptz,nxr1,nxr2,nxr3,nyr1,nyr2,nzr1,nzr2,nzr3,
     1 i,j,elnum,ndnum,cord1,cord2,cord3,
     1 cord4
      common /base2/ x,y,z,xpl1,xpl2,xdr1,xdr2,
     1 xdr3,ydr1,ydr2,zdr1,zdr2,zdr3,nptx,npty,nptz,nxr1,nxr2,nxr3,nyr1,
     1 nyr2,nyr3,nzr1,nzr2,nzr3,elx1,ely1,elz1
      common /base1/ cord1(300),cord2(300),cord3(300),cord4(300),
     1 gdcs(300,7)
      common /base4/elnum,ndnum
      integer ind,ind1,ind2,ist
c     The first plane xy; Z = 0
      ind1 = npty+1
      ind2 = nptx+1
      ist = 1
      do 40 j = ist, ind1
      do 50 i = ist, ind2
      gdcs(ndnum,1) = xval(i)
      gdcs(ndnum,2) = ely1
      gdcs(ndnum,3) = elz1
      if(ind.eq.1) then
      gdcs(ndnum,4) = 1
      else
      gdcs(ndnum,4)  = 2
      endif
      write(6,*)gdcs(ndnum,1),gdcs(ndnum,2),gdcs(ndnum,3),
     1 int(gdcs(ndnum,4))
      ndnum = ndnum + 1
 50   continue
      if(j.le.nyr1) ely1 = ely1 + ydr1
      if(j.gt.nyr1) ely1 = ely1 + ydr2
      if(ely1.gt.y+1) ely1 = 0.0
 40   continue
      return
      end
c
```

```
c       The second plane yz; X= 0
        subroutine planeyz(xval)
        real x,y,z,xpl1,xpl2,xdr1,xdr2,xdr3,
     1  ydr1,ydr2,zdr1,zdr2,elx1,ely1,elz1,gdcs,xval(20)
        integer nptx,npty,nptz,nxr1,nxr2,nxr3,nyr1,nyr2,nzr1,nzr2,nzr3,
     1  i,j,elnum,ndnum,cord1,cord2,cord3,
     1  cord4
        common /base2/ x,y,z,xpl1,xpl2,xdr1,xdr2,
     1  xdr3,ydr1,ydr2,zdr1,zdr2,zdr3,nptx,npty,nptz,nxr1,nxr2,nxr3,nyr1,
     1  nyr2,nyr3,nzr1,nzr2,nzr3,elx1,ely1,elz1
        common /base1/ cord1(300),cord2(300),cord3(300),cord4(300),
     1  gdcs(300,7)
        common /base4/elnum,ndnum
        do 60 j = 1, nptz-1
        do 70 i = 1, npty+1
        gdcs(ndnum,1) = elx1
        gdcs(ndnum,2) = ely1
        gdcs(ndnum,3) = elz1
        gdcs(ndnum,4) = 2
        if(abs(ely1-y).lt.0.1.or.abs(elz1-z).lt.0.1
     1  .or.abs(ely1).lt.0.1.or.abs(elz1).lt.0.1) then
        gdcs(ndnum,5) = 1
        else
        gdcs(ndnum,5) = 0
        endif
        gdcs(ndnum,6) = 1
        gdcs(ndnum,7) = 1
        if(i.le.nyr1) ely1 = ely1 + ydr1
        if(i.gt.nyr1) ely1 = ely1 + ydr2
        write(6,*)gdcs(ndnum,1),gdcs(ndnum,2),gdcs(ndnum,3),int(gdcs(ndnum,4))
        ndnum = ndnum + 1
 70     continue
        ely1 =0.0
        if(j.le.nzr1) elz1 = elz1 + zdr1
        if(j.gt.nzr1) elz1 = elz1 + zdr2
        if(elz1.gt.z+1) elz1 = 0.0
        if(i.ge.nptz.and.j.ge.npty) return
 60     continue
        return
        end
c This is the third plane xz;Y = b plane
        subroutine planexz(xval)
        real x,y,z,xpl1,xpl2,xdr1,xdr2,xdr3,
     1  ydr1,ydr2,zdr1,zdr2,elx1,ely1,elz1,gdcs,xval(20)
        integer nptx,npty,nptz,nxr1,nxr2,nxr3,nyr1,nyr2,nzr1,nzr2,nzr3,
     1  i,j,elnum,ndnum,cord1,cord2,cord3,
     1  cord4
        common /base2/ x,y,z,xpl1,xpl2,xdr1,xdr2,
     1  xdr3,ydr1,ydr2,zdr1,zdr2,zdr3,nptx,npty,nptz,nxr1,nxr2,nxr3,nyr1,
     1  nyr2,nyr3,nzr1,nzr2,nzr3,elx1,ely1,elz1
        common /base1/ cord1(300),cord2(300),cord3(300),cord4(300),
     1  gdcs(300,7)
        common /base4/elnum,ndnum
        do 80 j = 1, nptz-1
        do 90 i = 1,2
        if(i.eq.1) then
```

```
      elxl = xval(5)
      else
      elxl = xval(7)
      endif
      gdcs(ndnum,1) = elxl
      gdcs(ndnum,2) = elyl
      gdcs(ndnum,3) = elzl
      gdcs(ndnum,4) = 2
      gdcs(ndnum,5) = 1
      gdcs(ndnum,7) = 1
      if(abs(elxl-x).lt.0.1.or.abs(elzl-z).lt.0.1.or
     1 .abs(elxl).lt.0.1.or.abs(elzl).lt.0.1) then
      gdcs(ndnum,6) = 1
      else
      gdcs(ndnum,6) = 0
      endif
      write(6,*)gdcs(ndnum,1),gdcs(ndnum,2),gdcs(ndnum,3),int(gdcs(ndnum,4))
      ndnum = ndnum + 1
      elxl = xval(i)
      if(elxl.gt.x+1) elxl = 0.0
90    continue
      elxl =xdrl
      if(j.le.nzrl) elzl = elzl + zdrl
      if(j.gt.nzrl) elzl = elzl + zdr2
      if(elzl.gt.z+1) elzl = 0.0
      if(i.gt.nxrl+nxr2+nxr3.and.j.gt.nzrl+nzr2) return
80    continue
      return
      end
```

```
c
c
c       ********************************
c       * TO BUILD NODAL CONNECTIVITIES  *
c       * USE THIS PROGRAM               *
c       * INPUT IS OUTPUT OF LAST        *
c       * PROGRAM                        *
c       ********************************
c
c
        real x,y,z,xpl1,xpl2,xdr1,xdr2,xdr3,
     1  ydr1,ydr2,zdr1,zdr2,elx1,ely1,elz1,gdcs,xval(20)
        integer nptx,npty,nptz,nxr1,nxr2,nxr3,nyr1,nyr2,nzr1,nzr2,nzr3,
     1  i,elnum,ndnum,cord1,cord2,cord3,
     1  cord4,bc
        common /base2/ x,y,z,xpl1,xpl2,xdr1,xdr2,
     1  xdr3,ydr1,ydr2,zdr1,zdr2,zdr3,nptx,npty,nptz,nxr1,nxr2,nxr3,nyr1,
     1  nyr2,nyr3,nzr1,nzr2,nzr3,elx1,ely1,elz1
        common /base1/ cord1(1000),cord2(1000),cord3(1000),cord4(1000),
     1  gdcs(1000,3),bc(1000,2)
        common /base4/elnum,ndnum
c The program is designed to build elements form data
c of genz.f
        read(5,*) ndnum
        do 19 i = 1,ndnum
        read(5,*) xval(i)
 19     continue
        read (5,*) x,y,z
        read(5,*) ydr1,ydr2
        read(5,*) zdr1,zdr2
        read(5,*) nptx,npty,nptz
        read(5,*) nxr1,nxr2,nxr3
        read(5,*) nyr1,nyr2
        read(5,*) nzr1,nzr2
        read(5,*) ndnum
        do 10 i = 1,ndnum
        read(5,*) gdcs(i,1),gdcs(i,2),gdcs(i,3),bc(i,1)
 10     continue
        elnum= 1
        call elbld(xval)
        write(6,*) ndnum
        do 30 i = 1,ndnum
        print *,i,gdcs(i,1),gdcs(i,2),gdcs(i,3),bc(i,1)
 30     continue
        write(6,*) elnum-1
        do 20 i = 1,elnum-1
        write(6,*)i, cord1(i),cord2(i),cord3(i),cord4(i)
 20     continue
        stop
        end
c
c
c
        subroutine elbld(xval)
        real x,y,z,xpl1,xpl2,xdr1,xdr2,xdr3,
     1  ydr1,ydr2,zdr1,zdr2,elx1,ely1,elz1,gdcs,xval(20)
        integer nptx,npty,nptz,nxr1,nxr2,nxr3,nyr1,nyr2,nzr1,nzr2,nzr3,
     1  i,elnum,ndnum,cord1,cord2,cord3,
     1  cord4,bc
```

```
      common /base2/ x,y,z,xpl1,xpl2,xdr1,xdr2,
     1 xdr3,ydr1,ydr2,zdr1,zdr2,zdr3,nptx,npty,nptz,nxr1,nxr2,nxr3,nyr1,
     1 nyr2,nyr3,nzr1,nzr2,nzr3,elx1,ely1,elz1
      common /base1/ cord1(1000),cord2(1000),cord3(1000),cord4(1000),
     1 gdcs(1000,3),bc(1000,2)
      common /base4/elnum,ndnum
c This does the element finding routine,associates
c elements with nodes.
      elx1 = 0.0
      ely1 = 0.0
      elz1 = 0.0
      call elxyp(xval)
      do 105 i = 1,13
      if(i.eq.5.or.i.eq.7) go to 105
      elx1 = xval(i)
      ely1 = 0.0
      elz1 = 0.0
      call elyzp(xvla)
 105  continue
      elx1 = 0.0
      ely1 = 0.0
      elz1 = 0.0
      call elxzp(xval)
      elx1 = 0.0
      ely1 = y
      elz1 = 0.0
      call elxzp(xval)
      elx1 = 0.0
      ely1 = 0.0
      elz1 = z
      call elxyp(xval)
      return
      end
c
c
      subroutine elxyp(xval)
      real x,y,z,xpl1,xpl2,xdr1,xdr2,xdr3,
     1 ydr1,ydr2,zdr1,zdr2,elx1,ely1,elz1,gdcs,xval(20)
      integer nptx,npty,nptz,nxr1,nxr2,nxr3,nyr1,nyr2,nzr1,nzr2,nzr3,
     1 i,j,elnum,ndnum,cord1,cord2,cord3,
     1 cord4,bc
      common /base2/ x,y,z,xpl1,xpl2,xdr1,xdr2,
     1 xdr3,ydr1,ydr2,zdr1,zdr2,zdr3,nptx,npty,nptz,nxr1,nxr2,nxr3,nyr1,
     1 nyr2,nyr3,nzr1,nzr2,nzr3,elx1,ely1,elz1
      common /base1/ cord1(1000),cord2(1000),cord3(1000),cord4(1000),
     1 gdcs(1000,3),bc(1000,2)
      common /base4/elnum,ndnum
      real elx2,ely2,elz2,elx3,ely3,elz3,elx4,ely4,elz4
      integer ii
      do 20 j = 1 , npty
      if(j.le.nyr1) ely3 = ely1 + ydr1
      if(j.gt.nyr1) ely3 = ely1 + ydr2
      do 10 i = 1 , nptx
c     if(i.le.nxr1) elx2 = elx1 + xdr1
c     if(i.gt.nxr1.and.i.le.nxr2+nxr1) elx2 = elx1 + xdr2
c     if(i.gt.nxr2+nxr1) elx2 = elx1 + xdr3
```

```
      elx2 = xval(i+1)
      elx3 = elx2
      elx4 = elx1
      elz2 = elz1
      elz3 = elz1
      elz4 = elz1
      ely2 = ely1
      ely4 = ely3
      do 101 ii = 1,ndnum
      if(abs(gdcs(ii,1)-elx1).lt.0.1) then
      if(abs(gdcs(ii,2)-ely1).lt.0.1) then
      if(abs(gdcs(ii,3)-elz1).lt.0.1) then
      cord1(elnum) = ii
      endif
      endif
      endif
      if(abs(gdcs(ii,1)-elx2).lt.0.1) then
      if(abs(gdcs(ii,2)-ely2).lt.0.1) then
      if(abs(gdcs(ii,3)-elz2).lt.0.1) then
      cord2(elnum) = ii
      endif
      endif
      endif
      if(abs(gdcs(ii,1)-elx3).lt.0.1) then
      if(abs(gdcs(ii,2)-ely3).lt.0.1) then
      if(abs(gdcs(ii,3)-elz3).lt.0.1) then
      cord3(elnum) = ii
      endif
      endif
      endif
      if(abs(gdcs(ii,1)-elx4).lt.0.1) then
      if(abs(gdcs(ii,2)-ely4).lt.0.1) then
      if(abs(gdcs(ii,3)-elz4).lt.0.1) then
      cord4(elnum) = ii
      endif
      endif
      endif
101   continue
      elnum = elnum + 1
      elx1 = elx2
10    continue
      ely1 = ely3
      elx1 = 0.0
20    continue
      return
      end
c
c
c
      subroutine elxzp(xval)
      real x,y,z,xp11,xp12,xdr1,xdr2,xdr3,
     1 ydr1,ydr2,zdr1,zdr2,elx1,ely1,elz1,gdcs,xval(20)
      integer nptx,npty,nptz,nxr1,nxr2,nxr3,nyr1,nyr2,nzr1,nzr2,nzr3,
     1 i,j,elnum,ndnum,cord1,cord2,cord3,
     1 cord4,bc
```

```
      common /base2/ x,y,z,xpl1,xpl2,xdr1,xdr2,
     1 xdr3,ydr1,ydr2,zdr1,zdr2,zdr3,nptx,npty,nptz,nxr1,nxr2,nxr3,nyr1,
     1 nyr2,nyr3,nzr1,nzr2,nzr3,elx1,ely1,elz1
      common /base1/ cord1(1000),cord2(1000),cord3(1000),cord4(1000),
     1 gdcs(1000,3),bc(1000,2)
      common /base4/elnum,ndnum
      real elx2,ely2,elz2,elx3,ely3,elz3,elx4,ely4,elz4
      integer ii
      do 20 j = 1,nptz
      if(j.le.nzr1) elz3 = elz1 + zdr1
      if(j.gt.nzr1) elz3 = elz1 + zdr2
      do 10 i = 1,nptx
c     if(i.le.nxr1) elx2 = elx1 + xdr1
c     if(i.gt.nxr1.and.i.le.nxr2+nxr1) elx2 = elx1 + xdr2
c     if(i.gt.nxr2+nxr1) elx2 = elx1 + xdr3
      elx2  = xval(i+1)
      elx3 = elx2
      elx4 = elx1
      ely2 = ely1
      ely3 = ely1
      ely4 = ely1
      elz2 = elz1
      elz4 = elz3
      do 101 ii = 1,ndnum
      if(abs(gdcs(ii,1)-elx1).lt.0.1) then
      if(abs(gdcs(ii,2)-ely1).lt.0.1) then
      if(abs(gdcs(ii,3)-elz1).lt.0.1) then
      cord1(elnum) = ii
      endif
      endif
      endif
      if(abs(gdcs(ii,1)-elx2).lt.0.1) then
      if(abs(gdcs(ii,2)-ely2).lt.0.1) then
      if(abs(gdcs(ii,3)-elz2).lt.0.1) then
      cord2(elnum) = ii
      endif
      endif
      endif
      if(abs(gdcs(ii,1)-elx3).lt.0.1) then
      if(abs(gdcs(ii,2)-ely3).lt.0.1) then
      if(abs(gdcs(ii,3)-elz3).lt.0.1) then
      cord3(elnum) = ii
      endif
      endif
      endif
      if(abs(gdcs(ii,1)-elx4).lt.0.1) then
      if(abs(gdcs(ii,2)-ely4).lt.0.1) then
      if(abs(gdcs(ii,3)-elz4).lt.0.1) then
      cord4(elnum) = ii
      endif
      endif
      endif
101   continue
      elnum = elnum + 1
```

```
      elxl = elx2
 10   continue
      elzl = elz3
      elxl = 0.0
 20   continue
      return
      end
c
c
      subroutine elyzp(xval)
      real x,y,z,xpl1,xpl2,xdr1,xdr2,xdr3,
     1 ydr1,ydr2,zdr1,zdr2,elxl,elyl,elzl,gdcs,xval(20)
      integer nptx,npty,nptz,nxr1,nxr2,nxr3,nyr1,nyr2,nzr1,nzr2,nzr3,
     1 i,j,elnum,ndnum,cord1,cord2,cord3,
     1 cord4,bc
      common /base2/ x,y,z,xpl1,xpl2,xdr1,xdr2,
     1 xdr3,ydr1,ydr2,zdr1,zdr2,zdr3,nptx,npty,nptz,nxr1,nxr2,nxr3,nyr1,
     1 nyr2,nyr3,nzr1,nzr2,nzr3,elxl,elyl,elzl
      common /base1/ cord1(1000),cord2(1000),cord3(1000),cord4(1000),
     1 gdcs(1000,3),bc(1000,2)
      common /base4/elnum,ndnum
      real elx2,ely2,elz2,elx3,ely3,elz3,elx4,ely4,elz4
      integer ii
      do 10 j = 1,nptz
      if(j.le.nzr1) elz3 = elzl + zdr1
      if(j.ge.nzr1) elz3 = elzl + zdr2
      do 20 i = 1,npty
      if(i.le.nyr1) ely2 = elyl+ydr1
      if(i.gt.nyr1) ely2 = elyl+ydr2
      ely3 = ely2
      ely4 = elyl
      elx2 = elxl
      elx3 = elxl
      elx4 = elxl
      elz2 = elzl
      elz4 = elz3
      do 101 ii = 1,ndnum
      if(abs(gdcs(ii,1)-elxl).lt.0.1) then
      if(abs(gdcs(ii,2)-elyl).lt.0.1) then
      if(abs(gdcs(ii,3)-elzl).lt.0.1) then
      cord1(elnum) = ii
      endif
      endif
      endif
      if(abs(gdcs(ii,1)-elx2).lt.0.1) then
      if(abs(gdcs(ii,2)-ely2).lt.0.1) then
      if(abs(gdcs(ii,3)-elz2).lt.0.1) then
      cord4(elnum) = ii
      endif
      endif
      endif
      if(abs(gdcs(ii,1)-elx3).lt.0.1) then
      if(abs(gdcs(ii,2)-ely3).lt.0.1) then
      if(abs(gdcs(ii,3)-elz3).lt.0.1) then
      cord3(elnum) = ii
```

```
        endif
        endif
        endif
        if(abs(gdcs(ii,1)-elx4).lt.0.1) then
        if(abs(gdcs(ii,2)-ely4).lt.0.1) then
        if(abs(gdcs(ii,3)-elz4).lt.0.1) then
        cord2(elnum) = ii
        endif
        endif
        endif
 101    continue
        elnum = elnum + 1
        ely1 = ely2
 20     continue
        elz1 = elz3
        ely1 = 0.0
 10     continue
        return
        end
cc
```

```
c
c       ****************************
c       *FINAL PROGRAM FOR THERMAL*
c       *PROFILE                  *
c       ****************************
c
c       THE SOLUTION IS OBTAINED BY SOLVING THE PROBLEM
c
c       AS A STEADY STATE ONE.
c
c       THE IDEA IS TO SOLVE THE STEADY STATE HEAT CONDUCTION
c
c       PROBLEM, USING MEASURED TEMPERATURES AS BOUNDARY
c
c       CONDITIONS.
c
c       THE PROBLEM IS SOLVED AS A SET OF 2 D PLATES.
c
c*****************************************************
c THIS IS A SIMPLE FORMULATION OF FEM FOR
c SOLUTION OF HEAT TRANSFER PROBLEMS
c IT HAS NO DERIVATIVE CONDITIONS
c stiffness matrix K for the given
c structure ----- mat(540,540)
c The structure in question is the X axis of the
c T10 which is being studied.
c The input  to the program is the following
c Nodal cordinates x,y,z---- gdcs(1000,3),
c boundary cond---- bc(1000,2)
c base is assumed to be insulated
c Nodal connectivities cord1,cord2,cord3,cord4
c Input thermal cond--thcond
c Input conv coeff -- convc
cccc*****************************
c       NODAL CONNECTIVITIES ARE AS SHOWN
c       =================================
c
c
c      4|-------------| 3
c       |             |
c       |             |
c       |             |
c       |             |
c      1|-------------| 2
c
        real mat(500,500),gdcs(500,3),a,b,c,fmat(12,12),k2mat(4,4),
     1  bctemp(30)
        integer i,j,k,cord1(500),cord2(500),cord3(500),cord4(500),
     1  bc(500,2),bcnode(30),nn(10),elnum,ndnum,ntmp
        real coeff,vec(500),rmtmp
        coeff = 0.01
c       heat transfer coeff, coeff = 0.01 cal/cm*cm min degree C
        do 30 i = 1,500
        do 40 j = 1,500
        mat(i,j) = 0.0
        vec(i)   = 0.0
 40     continue
 30     continue
```

```
      do 200 i = 1,4
      do 200 j = 1,4
      k2mat(i,j) = 1.0
 200  continue
c k2mat is the matrix for integral x,y h*t(room)*ni*dx*dy
      k2mat(1,1) = 1/9.0*coeff
      k2mat(1,2) = 1/(18.0)*coeff
      k2mat(1,3) = 1/36.*coeff
      k2mat(1,4) = 1/18.*coeff
      k2mat(2,1) = 1/18.0*coeff
      k2mat(2,2) = 1/9.0*coeff
      k2mat(2,3) = 1/18.0*coeff
      k2mat(2,4) = 1/36.0*coeff
      k2mat(3,1) = 1/36.0*coeff
      k2mat(3,2) = 1/18.0*coeff
      k2mat(3,3) = 1/9.0*coeff
      k2mat(3,4) = 1/18.0*coeff
      k2mat(4,1) = 1/18.0*coeff
      k2mat(4,2) = 1/36.0*coeff
      k2mat(4,3) = 1/18.0*coeff
      k2mat(4,4) = 1/9.0*coeff
      read (5,*) ndnum
      do 10 i = 1,ndnum
      read(5,*)j,gdcs(i,1),gdcs(i,2),gdcs(i,3),bc(i,1)
 10   continue
      read(5,*) elnum
      do 20 i = 1,elnum
c Data reading is the same.
c No modification.
      read(5,*) j,cord1(i),cord2(i),cord3(i),cord4(i)
 20   continue
      b = 0.0
c read in room temp values
c ntmp is number of room temp values
c the average is used
      read(5,*) ntmp
      do 500 i = 1,ntmp
      read(5,*) a
      b = b+a
500   continue
      rmtmp = b/ntmp
c ntmp is number of machine temp values
c bcnode(i),bctemp(i), refer to the node of the
c structure and the temperature associated with that node
c Temps on the machine are set up as b.c's.
      read(5,*) ntmp
      do 501 i = 1,ntmp
      read(5,*) bcnode(i),bctemp(i)
 501  continue
      do 50 i = 1,elnum
      a = 0.0
      b = 0.0
      c = 0.0
      nn(1) = cord1(i)
      nn(2) = cord2(i)
      nn(3) = cord3(i)
```

```
      nn(4) = cord4(i)
      a =abs( gdcs(nn(3),1)-gdcs(nn(1),1))
      b =abs( gdcs(nn(3),2)-gdcs(nn(1),2))
      c =abs( gdcs(nn(3),3)-gdcs(nn(1),3))
      do 80 j = 1,4
      do 90 k = 1,4
c Initialize local stiffness matrix
      fmat(j,k) = 0.0
 90   continue
 80   continue
c Call for local stiffness matrix
      call funm(a,b,c,fmat)
      do 201 j = 1,4
      do 201 k = 1,4
c c  boundary condition ,intro
c here only the convection boundary condition is introduced,
c h = 2*h on all plates
c on the base where it is h
c No change in temperature through the wall thickness
      if(bc(i,1).eq.1) then
      k2mat(j,k) = k2mat(j,k)*a*b
      endif
      if(bc(i,1).eq.2) then
      k2mat(j,k) =2.0*k2mat(j,k)*a*b
      endif
201   continue
c set up the rhs of the matrix equation
      do 502 j = 1,4
      if(bc(nn(j),1).eq.1) then
      vec(nn(j)) =vec(nn(j))+rmtmp*coeff*a*b/4.0
      endif
      if(bc(nn(j),1).eq.2) then
      vec(nn(j)) =vec(nn(j))+2*rmtmp*coeff*a*b/4.0
      endif
 502  continue
      do 60 j = 1,4
      do 70 k = 1,4
c build up the global stiffness matrix
      mat(nn(j),nn(k))   = mat(nn(j),nn(k))+fmat(j,k)+k2mat(j,k)
 70   continue
 60   continue
      do 202 j = 1,4
      do 203 k = 1,4
      k2mat(1,1) = 1/9.0*coeff
      k2mat(1,2) = 1/(18.0)*coeff
      k2mat(1,3) = 1/36.*coeff
      k2mat(1,4) = 1/18.*coeff
      k2mat(2,1) = 1/18.0*coeff
      k2mat(2,2) = 1/9.0*coeff
      k2mat(2,3) = 1/18.0*coeff
      k2mat(2,4) = 1/36.0*coeff
      k2mat(3,1) = 1/36.0*coeff
      k2mat(3,2) = 1/18.0*coeff
      k2mat(3,3) = 1/9.0*coeff
      k2mat(3,4) = 1/18.0*coeff
      k2mat(4,1) = 1/18.0*coeff
```

```
      k2mat(4,2) = 1/36.0*coeff
      k2mat(4,3) = 1/18.0*coeff
      k2mat(4,4) = 1/9.0*coeff
c reset k2mat to original value.
 203  continue
 202  continue
 50   continue
c Set in the boundary conditions
c of measured room temp, and reset the rhs vector.
      do 705 i = 1,ntmp
      do 710 j = 1,ndnum
      vec(j)   = vec(j) -mat(j,bcnode(i))*bctemp(i)
 710  continue
      vec(bcnode(i)) = bctemp(i)
      do 707 j = 1,ndnum
      mat(j,bcnode(i)) = 0.0
 707  continue
      do 708 j = 1,ndnum
      mat(bcnode(i),j) = 0.0
 708  continue
      mat(bcnode(i),bcnode(i)) = 1.0
 705  continue
c     solve [A]{x}={b}
      call solve(mat,vec,ndnum)
      stop
      end
c
c
c
c
c
c
      subroutine funm(a,b,c,fmat)
      real a,b,c,fmat(12,12)
      real thco,thic
      integer i,j
      thco = 8.912*(1/0.1)*(1/.1)
      thic = (3./4.)*(5./2.)
c     thco, thermal conductivity 8.912 cal/cm min degree C
c     thco, has been reset to account for scale.
c     TWO TYPES OF PLATES
c     OUTER WALLS AND INNNER RIBS
      do 10 i = 1,10
      do 20 j = 1,10
      fmat(i,j) = 0.0
 20   continue
 10   continue
      if(a.lt.0.5) then
      a = b
      b = c
      endif
      if(b.lt.0.5) then
      b = c
      endif
      fmat(1,1) =  (b*b+a*a)/(3*a*b)
      fmat(2,1) =  (a*a-2*b*b)/(6*a*b)
```

```
      fmat(3,1) = - (b*b+a*a)/(6*a*b)
      fmat(4,1) =  (b*b-2*a*a)/(6*a*b)
      fmat(1,2) = fmat(2,1)
      fmat(2,2) = fmat(1,1)
      fmat(3,2) =  (b*b-2*a*a)/(6*a*b)
      fmat(4,2) = - (b*b+a*a)/(6*a*b)
      fmat(1,3) = fmat(3,1)
      fmat(2,3) = fmat(3,2)
      fmat(3,3) = fmat(1,1)
      fmat(4,3) =  (a*a-2*b*b)/(6*a*b)
      fmat(1,4) = fmat(4,1)
      fmat(2,4) = fmat(4,2)
      fmat(3,4) = fmat(4,3)
      fmat(4,4) = fmat(1,1)
      do 100 i = 1,4
      do 100 j = 1,4
      fmat(i,j) = fmat(i,j)*thic*thco
 100  continue
      return
      end
c
c
c The subroutine does matrix equation solution
c Matrix eq is of the form [A]{x}={b}.
c determine x,given A,b
c Crouts algo is used.
c l-u decom is done then the solution is performed
      subroutine solve(a,b,n)
      real a(500,500),b(500),la(500,500),ua(500,500),cl,d(500)
      real chk(500),chkl(500)
      integer n,m,i,j,k
      do 109 i = 1,n
      chkl(i) = b(i)
 109  continue
      ua(1,1) = a(1,1)
      la(1,1) = 1.0
      do 10 j = 2,n
      la(j,1) = a(j,1)/ua(1,1)
      ua(1,j) = a(1,j)
      if(j.gt.2) then
      do 20 i = 2,j-1
      cl = 0.0
      do 30 m = 1,i-1
      cl  = cl + la(j,m)*ua(m,i)
 30   continue
      la(j,i) = (a(j,i)-cl)/ua(i,i)
      cl = 0.0
      do 40 m = 1,i-1
      cl  = cl + la(i,m)*ua(m,j)
 40   continue
      ua(i,j) = a(i,j)-cl
 20   continue
      endif
      la(j,j) = 1
      cl  = 0.0
      do 50 m = 1,j-1
      cl  = cl + la(j,m)*ua(m,j)
50    continue
```

```
        ua(j,j) = a(j,j)-cl
10      continue
        do 999 i = 1,30
        do 999 j = 1,30
        if(la(i,j).ne.0) then
        endif
 999    continue
        do 998 i = 1,30
         do 998 j = 1,30
        if(ua(i,j).ne.0) then
        endif
 998    continue
        cl = 0.0
        k  = 1
        d(1) = b(1)
        do 100 i = 2,n
        cl = 0.0
        do 101 j = 1,k
        cl   = cl + la(i,j)*d(j)
 101    continue
        d(i) = b(i)-cl
        k    = k + 1
 100    continue
        do 102 i = 1,n
        b(i)     = 0.0
 102    continue
        cl       = 0.0
        k        = 1
        b(n)   = d(n)/ua(n,n)
        do 103 k = 1,n-1
        i        = n-k
        cl       = 0.0
        do 104 j = i+1,n
        cl       = cl +ua(i,j)*b(j)
 104    continue
        b(i)     = (d(i)-cl)/ua(i,i)
 103    continue
        do 105 i = 1,n
        print*,b(i)
 105    continue
        print*,'error'
        do 200 i = 1,n
        do 200 j = 1,n
        chk(i)   =chk(i)+ a(i,j)*b(j)
 200    continue
        chk(i)   = chkl(i)-chk(i)
        print *,chk(i),i
  201   continue
        return
        end
```

```
cccccccccccccccccccccccccccccccccccccccccccccccccccccc
cccccccccccccccccccccccccccccccccccccccccccccccccccccc
c THIS CONCLUDES THE THERMAL SOLUTION
c THE OUTPUT IS A VECTOR OF TEMPERATURE POINTS
c EACH OF WHICH CORRESPONDS TO SPECIFIC NODAL
c POINTS.
c FOR SAP V,
c THE OUTPUT IS FED INTO SAP_V WITH ANOTHER PROGRAM
c WHICH REFORMATS THIS OUTPUT TO CONFORM TO SAP V FORMAT.
c CONSTANTS USED ARE
c THERMAL COND.     = 8.91 cals/cm min degree C
c THERMAL EXP.      = 11.6     micro meter/meter/ degree C
c   HEAT TRANSFER
c COEFF.            = 0.01 cal/cm *cm min degree C
c SPECIFIC HEAT     = 0.125 cals/gm degree C
c DENSITY           = 7.859  gm/cm*cm*cm
c MOD. OF ELAS.     = 2.1e6  kgf/cm*cm
c POISSON'S RATIO   = 0.3
```

APPENDIX 5

Project Staff in 1983–1984

Faculty

M. M. Barash, Ransburg Professor of Manufacturing and Professor of Industrial Engineering	Principal Investigator & Project Director
C. R. Liu, Professor of Industrial Engineering	Principal Investigator
K. S. Fu, Goss Distinguished Professor of Engineering (Elec.Eng.)	Faculty Associate
J. Modrey, Professor of Mechanical Engineering	Co–Principal Investigator
A. L. Sweet, Professor of Industrial Engineering	Co–Principal Investigator
W. Stevenson, Professor of Mechanical Engineering	Faculty Associate
J. J. Talavage, Professor of Industrial Engineering	Faculty Associate
R. Hannam*, Visiting Associate Professor of Industrial Engineering	Faculty Associate
W. Johnson**, Visiting Professor of Industrial Engineering	Faculty Associate
A. Shumsherrudint, Visiting Associate Professor of Industrial Engineering	Faculty Associate

(*University of Manchester Institute of Science and Technology, England
**University of Cambridge, England
†Cranfield Institute of Technology, England)

Graduate Research Assistants

P. Chen
Y.C. Chou
P. Ferreira
R. Khanna
S.K. Lee
G.R. Liang
Y.T. Lin
J. Lopez
D. Noller
Y.S. Ouyang
U. Roy
S. Shodhan
R. Srinivasan
S. Venkatramen
R. Venugopal
M.C. Wu
J. York

END

FILMED

3-86

DTIC