AD-A161 300 TURBINE FUELS FROM TAR SANDS BITUMEN AND HEAVY OIL 1/2
PHASE I PRELIMINARY PR..(U) SUNTECH INC MARCUS HOOK PA
A F TALBOT ET AL. 09 APR 85 AFWAL-TR-85-2013
UNCLASSIFIED F33615-83-C-2352 F/G 21/4 NL

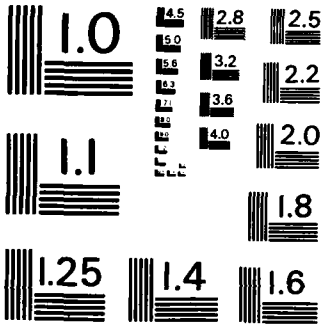

MICROCOPY RESOLUTION TEST CHART
NATIONAL BUREAU OF STANDARDS - 1963 - A

(12)

AD-A161 300

AFWAL-TR-85-2013

TURBINE FUELS FROM TAR SANDS BITUMEN AND HEAVY OIL

PHASE I
Preliminary Process Analysis

A. F. Talbot. V. Elanchenny, L. H. Finkel,
A. Macris and J. P. Schwedock

Sun Tech, Inc., A Subsidiary of Sun Co.
P. O. Box 1135
Marcus Hook, PA 19061-0835

April 1985

DTIC
ELECTE
NOV 21 1985
S D
E

INTERIM REPORT FOR PERIOD 8 JULY 1983 - 9 APRIL 1984

Approved for public release; distribution unlimited

DTIC FILE COPY

AERO PROPULSION LABORATORY
AIR FORCE WRIGHT AERONAUTICAL LABORATORIES
AIR FORCE SYSTEMS COMMAND
WRIGHT-PATTERSON AIR FORCE BASE, OHIO 45433-6563

85 11 14 117

NOTICE

When Government drawings, specifications, or other data are used for any purpose other than in connection with a definitely related Government procurement operation, the United States Government thereby incurs no responsibility nor any obligation whatsoever; and the fact that the government may have formulated, furnished, or in any way supplied the said drawings, specifications, or other data, is not to be regarded by implication or otherwise as in any manner licensing the holder or any other person or corporation, or conveying any rights or permission to manufacture, use, or sell any patented invention that may in any way be related thereto.

This report has been reviewed by the Office of Public Affairs (ASD/PA) and is releasable to the National Technical Information Service (NTIS). At NTIS, it will be available to the general public, including foreign nations.

This technical report has been reviewed and is approved for publication.

WILLIAM E. HARRISON, III, Capt, USAF
Fuels Branch
Fuels and Lubrication Division
Aero Propulsion Laboratory

ARTHUR V. CHURCHILL, Chief
Fuels Branch
Fuels and Lubrication Division
Aero Propulsion Laboratory

FOR THE COMMANDER

ROBERT D. SHERRILL, Chief
Fuels and Lubrication Division
Aero Propulsion Laboratory

"If your address has changed, if you wish to be removed from our mailing list, or if the addressee is no longer employed by your organization, please notify AFWAL/POSF *W-PAFB, OH 45433-6563 to help us maintain a current mailing list."*

Copies of this report should not be returned unless return is required by security considerations, contractual obligations, or notice on a specific document.

Unclassified
SECURITY CLASSIFICATION OF THIS PAGE

AD-A161 300

REPORT DOCUMENTATION PAGE

1a. REPORT SECURITY CLASSIFICATION Unclassified	1b. RESTRICTIVE MARKINGS
2a. SECURITY CLASSIFICATION AUTHORITY	3. DISTRIBUTION/AVAILABILITY OF REPORT Approved for public release; distribution unlimited.
2b. DECLASSIFICATION/DOWNGRADING SCHEDULE	
4. PERFORMING ORGANIZATION REPORT NUMBER(S)	5. MONITORING ORGANIZATION REPORT NUMBER(S) AFWAL-TR-85-2013
6a. NAME OF PERFORMING ORGANIZATION Sun Tech, Inc. A subsidiary of Sun Co. 6b. OFFICE SYMBOL (If applicable)	7a. NAME OF MONITORING ORGANIZATION DCASMA Philadelphia
6c. ADDRESS (City, State and ZIP Code) P.O. Box 1135 Marcus Hook, PA 19061-0835	7b. ADDRESS (City, State and ZIP Code) P.O. Box 7699 Philadelphia, PA 19101
8a. NAME OF FUNDING/SPONSORING ORGANIZATION Air Force Wright Aeronautical Laboratories 8b. OFFICE SYMBOL (If applicable)	9. PROCUREMENT INSTRUMENT IDENTIFICATION NUMBER Contract Number F33615-83-C-2352
8c. ADDRESS (City, State and ZIP Code) Aero Propulsion Laboratory (AFWAL/POSF) Air Force Wright Aeronautical Laboratories(AFSC) Wright-Patterson AFB, OH 45433-6563	10. SOURCE OF FUNDING NOS PROGRAM ELEMENT NO. 63215F; PROJECT NO. 2480; TASK NO. 08; WORK UNIT NO. 03
11. TITLE (Include Security Classification) Turbine Fuels From Tar Sands Bitumen and Heavy Oil	
12. PERSONAL AUTHOR(S) Talbot, A. F.; Elanchenny, V.; Macris, A.; and Schwedock, J. P.	
13a. TYPE OF REPORT Interim 13b. TIME COVERED FROM 8 Jul 83 TO 9 Apr 84	14. DATE OF REPORT (Yr., Mo., Day) 9 April 1985 15. PAGE COUNT 184
16. SUPPLEMENTARY NOTATION Report presented at Contractor's Review Meeting at Wright-Patterson AFB on 28 March 1984	

17. COSATI CODES			18. SUBJECT TERMS (Continue on reverse if necessary and identify by block number)
FIELD	GROUP	SUB. GR.	Turbine fuel, JP-4, upgrading, refining, tar sands, bitumen, heavy crude oil, hydrotreating, hydrocracking, hydrovisbreaking, delayed coking, asphalt residual treating.
21	04	05	
07	01	03	

19. ABSTRACT (Continue on reverse if necessary and identify by block number)

The strategic potential of domestic bitumens and heavy crude oils as substitutes for imported crude rests with their efficient conversion into aviation turbine fuels. In this Phase I study, preliminary analyses of several processing schemes have been performed. The comparison included both hydrogen addition and carbon rejection upgrading process. Projected JP-4 yields, costs, and thermal efficiencies suggest further exploration of the hydrovisbreaking process. For Phase II, laboratory scale demonstration of the recommended process is proposed.

20. DISTRIBUTION/AVAILABILITY OF ABSTRACT UNCLASSIFIED/UNLIMITED ☒ SAME AS RPT ☐ DTIC USERS ☐	21. ABSTRACT SECURITY CLASSIFICATION Unclassified
22a. NAME OF RESPONSIBLE INDIVIDUAL William E. Harrison III	22b. TELEPHONE NUMBER (Include Area Code) (513) 255-3549 22c. OFFICE SYMBOL AFWAL/POSF

DD FORM 1473, 83 APR EDITION OF 1 JAN 73 IS OBSOLETE.

Unclassified
SECURITY CLASSIFICATION OF THIS PAGE

SUMMARY

Assessment of domestic heavy crude oil and tar sands bitumens as potential sources of military aviation turbine fuels encompasses definition of the size of the resource, identification of suitable processing routes, and determination of the suitability of the fuel thus produced. This report presents the results of the first phase of such an assessment. The work included an estimation of the magnitude of the resource and the selection of a processing sequence for further investigation. Successive program phases propose to demonstrate the process sequence on a laboratory scale and then on a pilot plant scale, to provide appropriately sized samples for comprehensive testing, and to refine estimates of turbine fuel manufacturing costs.

Review of recent surveys of the domestic heavy oil and bitumen resources indicates numerous scattered deposits are known, while a large proportion of these resources is found in a few major concentrations:

Type	Billions of barrels Resource	Billions of barrels Reserve	Major locations
Heavy oil	33	5-20	Calif. Texas
Bitumen	25-53	5	Utah, Texas

The degree of confidence in these totals varies. The amount of heavy oil in the ground (the resource) is relatively firm. However, the amount that can be recovered (the reserve) is highly dependent on the prevailing economics and recovery technology required. The estimates of tar sands in place are far less definite, a reflection of the lower level of interest in bitumen over the years, for other than construction applications. The indicated five billion barrels of recoverable bitumen represents, at best, a "safe" rule-of-thumb estimate that at least ten percent of what is in the ground ought to be recoverable.

SUMMARY (Cont'd)

Compared to current DOD oil consumption of about 0.2 billion barrels per year, these reserves appear capable of producing a significant fraction of the armed forces needs, if their successful conversion to military fuel products can be assured.

As substitutes for conventional petroleum crude oils, heavy crudes and bitumens pose significant processing challenges. Conversion to usable transportation fuels generally requires 1) removal of, or reduction in, high levels of contaminants such as trace metals and non-hydrocarbons (e.g. sulfur, nitrogen), 2) reduction in molecular weight to achieve satisfactory vaporization, and 3) an increase in the hydrogen-to-carbon ratio to achieve acceptable combustion quality.

The proposed processing scheme accomplishes this conversion in two steps, viz. 1) upgrading the feedstocks to intermediate streams, which more closely resemble conventional petroleum crude oils, and 2) refining the intermediate streams into finished fuel or fuel blending components. Four different upgrading processes were considered. In each case, the upgrading process was integrated with a combination of refining processes--naphtha hydrotreating plus distillate hydrocracking--which had been selected for its ability to deliver maximum yields of aviation turbine fuels. Selected low grade feedstocks, consisting of tar sands bitumens from either New Mexico, Kentucky, or Utah, or a heavy crude oil from California, were considered. They were upgraded by either 1) delayed coking 2) hydrovisbreaking, 3) the proprietary Asphalt Residual Treating (ART) process or 4) fixed bed catalytic hydrotreatment.

Process operating conditions and yield structures were projected for individual processing units, based on published information, in-house experience and vendor quotations or estimates. Case studies were generated for various combinations of feedstock and upgrading process, and the results of the technical and economic analyses compared.

SUMMARY (Concluded)

The outcome of these estimates was a clear advantage for the hydrovisbreaking approach. It provided higher JP-4 yields and lower bottom-of-the-barrel yields than did the delayed coking, ART, or resid hydrotreating technologies. As a consequence, the projected fuel cost to achieve a satisfactory capital return was favored by the hydrovisbreaking process. These benefits are achieved at slight disadvantages in overall refinery thermal efficiency and total capital investment.

Projected fuel costs for the process scheme which included hydrovisbreaking ranged from $57.4/bbl (1.37 ¢/gal) to $65.5/bbl (1.56¢/gal) for the three bitumen feeds, when feedstock costs $25/bbl. When processing the California heavy crude, also priced at $25/bbl, estimated JP-4 fuel cost was $44.5/bbl (1.06 ¢/gal) using essentially the same process sequence.

The sharp difference between the costs of bitumen-derived JP-4 and heavy crude-derived JP-4 is not so much a feedstock effect as it is a refinery size effect. The bitumen refineries were sized at 7,500 BPSD capacity; the heavy crude refinery, 50,000 BPSD.

It was recommended that the program continue into the second phase, which consists of laboratory scale demonstration of the recommended process route, using hydrovisbreaking in the upgrading step. This will allow confirmation of the process estimates and preparation of small prototype fuel samples.

Accession For
NTIS GRA&I ☒
DTIC TAB ☐
Unannounced ☐
Justification
By
Distribution/
Availability Codes
Dist | Avail and/or Special
A-1

QUALITY INSPECTED 3

FOREWORD

This report presents the results of a study performed by the Applied Research Department of Sun Tech, Inc., a subsidiary of Sun Company. The program was supported by the Aero Propulsion Laboratory of the Air Force Wright Aeronautical Laboratories under Contract No. F33615-83-C-2352, awarded 8 July 1983. It addresses the technology of converting tar sands bitumens and heavy petroleum crude oils into aviation turbine fuels for military use.

The work was performed at the Sun Tech Marcus Hook, Pennsylvania laboratories during the period 8 July 1983 through 9 April 1984. The Air Force Project Engineer during this period was Captain William E. Harrison, III AFWAL/POSF. The Sun Tech Program Manager for the period 8 July 1983 through 31 December 1983 was Mr Henry E. Reif. On 31 December 1983, Mr Reif was succeeded by Mr Alfred F. Talbot. This report was released by the authors in December 1984. The Program Managers wish to acknowledge the valued contribution of their co-workers, Messrs V. Elanchenny, L. H. Finkel, A. Macris, and J. P. Schwedock, as well as the efforts of D. M. Clark in preparing the manuscript.

The Program Managers also express their appreciation to Captain William E. Harrison for his continued encouragement and assistance in meeting the various technical, administrative and logistical challenges associated with the project.

This interim report describes the results of the first phase of a planned three-phase assessment of the potential for producing military aviation turbine fuels from domestic deposits of tar sands bitumens and heavy crude oils. Phase I consisted of a preliminary screening of several combinations of upgrading and refining processes, based on published descriptions or in-house familiarity with these processes. This study led to identification of a recommended processing route, for further evaluation.

It is planned that in Phases II and III, experimental results will be obtained in laboratory and pilot plant scale equipment, respectively, when applying the selected processing sequence to a variety of poor quality feedstocks. Prototype turbine fuel samples, appropriate to the scale of the experimental work, will be prepared for evaluation by the Air Force in both Phase II and Phase III.

TABLE OF CONTENTS

Section		Page
I.	Introduction	1
II.	Resource Assessment	5
	1. Background	5
	2. Terminology	6
	3. Heavy Oil	9
	4. Tar Sands	15
III.	Processing Technology	22
	1. Introduction	22
	2. Feedstocks	25
	3. Upgrading Alternatives	27
	4. Upgrading/Refining Case Studies	28
	5. Process Estimates	31
IV.	Process Engineering Analysis	40
	1. Introduction	40
	2. Processing Schemes	40
	3. Process Descriptions	43
	4. Estimated Hydrogen Balance	53
	5. Refinery Fuel Balance	56
	6. Refinery Material Balances and Thermal Efficiencies	58
	7. Utilities	62
V.	Economic Analysis	63
	1. Introduction	63
	2. Economic Bases	63
	3. Determination of Fuel Costs	65
	4. Comparison of Upgrading Alternatives	70
VI.	Conclusions	77
VII.	Recommendations	79
	Appendix A. Properties of Whole Santa Maria Valley Crude Oil	135
	Appendix B. Detailed Process Estimates for Delayed Coking	137
	Appendix C. Detailed Process Estimates for Hydrovis-breaking	145
	Appendix D. Detailed Process Estimates for ART Process	157
	Appendix E. Detailed Process Estimate for Residual Hydrotreating	161
	Appendix F. Breakdown of Installed Capital Costs	163
	References	165

LIST OF ILLUSTRATIONS

Figure		Page
1	Generalized Processing Scheme - Turbine Fuel from Bitumen or Heavy Crude Oil	80
2	Case Studies Performed	81
3	Block Flow Diagrams of Processing Schemes	82
4	Overall Flow Schematic for Core Cases	85
5	Block Flow Schematic for FCC Option	86
6	Block Flow Schematic with Resid Gasifier for Hydrogen Production	87
7	Flow Schematic for Delayed Coker	88
8	Flow Schematic for Hydrovisbreaker	89
9	Flow Schematic for ART Process	90
10	Flow Schematic for Residuum Hydrotreating	91
11	Flow Schematic for Naphtha Hydrotreater	92
12	Flow Schematic for Distillate Hydrocracker	93
13	Flow Schematic for Gas Oil Feed Hydrotreater	94
14	Summary of Case Studies for Processing Bitumen from New Mexico	95
15	Summary of Case Studies for Processing Bitumen from Kentucky	96
16	Summary of Case Studies for Processing Bitumen from Utah	97
17	Summary of Case Studies for Processing Heavy Crude from California	98

LIST OF TABLES

Table		Page
1	Distribution of U.S. Heavy Oil Reservoirs by State	99
2	Major Heavy Oil Reservoirs of the United States	100
3	Quality Parameters of Heavy Crude Oils	101
4	Characteristics of Some Heavy Crude Oils	102
5	Distribution of Bitumen Deposits by State	103
6	Significant Tar Sands Deposits	104
7	Characteristics of Some Tar Sands Bitumens	105
8	Feedstock Characteristics	106
9	Delayed Coking Process Estimates	108
10	Hydrovisbreaking Process Estimates	109
11	Asphalt Residual Treating (ART) Process Estimates	110
12	Severe Hydrogenation Process Estimate	111
13	Naphtha Hydrotreating Process Estimates	112
14	Gas Oil Hydrocracking Process Estimates	113
15	Gas Oil Hydrotreating Process Estimate	114
16	Fluid Catalytic Cracking Process Estimate	115
17	Refinery Hydrogen Balance	116
18	Refinery Fuel Balance	117
19	Material Balance Summary for Processing Bitumen from New Mexico	118
20	Material Balance Summary for Processing Bitumen from Kentucky	119
21	Material Balance Summary for Processing Kentucky Bitumen into JP-4 or JP-8	120

LIST OF TABLES (Cont'd)

Table		Page
22	Material Balance Summary for Processing Bitumens from Utah	121
23	Material Balance Summary for Processing Heavy Crude Oil from California	122
24	Material Balance Summary for Processing Alternatives - Heavy Crude Oil from California	123
25	Summary - Utility Requirements	124
26	Economic Bases	125
27	Costs for Processing Bitumen from New Mexico	127
28	Costs for Processing Bitumen from Kentucky	128
29	Cost Comparison for Processing Kentucky Bitumen to JP-4 or JP-8	129
30	Costs for Processing Bitumen from Utah	130
31	Costs for Processing Heavy Crude Oil from California	131
32	Cost Comparison for Processing Options in Converting California Heavy Crude Oil	132
A	Properties of Santa Maria Valley Whole Crude	135
B-1	Estimated Delayed Coking Data for Processing Santa Rosa (New Mexico) Bitumen	137
B-2	Estimated Delayed Coking Data for Processing Kensyntar (Kentucky) Bitumen	139
B-3	Estimated Delayed Coking Data for Processing P.R. Spring (Utah) Bitumen	141
B-4	Estimated Delayed Coking Data for Processing Santa Maria Valley (California) Crude	143
C-1	Estimated Hydrovisbreaking Data for Processing Santa Rosa (New Mexico) Bitumen	145
C-2	Estimated Hydrovisbreaking Data for Processing Kensyntar (Kentucky) Bitumen	147

LIST OF TABLES (Concluded)

Table		Page
C-3	Estimated Hydrovisbreaking Data for Processing P.R. Spring (Utah) Bitumen	149
C-4	Estimated Hydrovisbreaking Data for Processing Santa Maria Valley (California) Crude	151
C-5	Estimated Hydrovisbreaking Data for Processing Santa Maria Valley (California) Crude	153
C-6	Estimated Hydrovisbreaking Data for Processing Santa Maria Valley (California) Crude	155
D-1	Estimated Asphalt Residual Treating (ART) Data for Processing Kensyntar (Kentucky) Bitumen	157
D-2	Estimated Asphalt Residual Treating (ART) Data for Processing Santa Maria Valley (California) Crude	159
E	Estimated Severe Hydrogenation Data for Processing Santa Rosa (New Mexico) Bitumen	161
F	Distribution of Battery Limits Capital Investment	163

SECTION I

INTRODUCTION

Current national energy policy emphasizes reduction in petroleum consumption as an effective means of reducing uncertainties in the future availability or price of petroleum crude oil. However, a sudden and prolonged disruption of only a few million barrels per day of crude oil during an international political crisis could seriously threaten global stability. The resultant increased demand for aviation and diesel fuels would be reinforced by a several-fold increase in U. S. Department of Defense daily consumption, the result of increased activities by our military forces.

Currently, annualized domestic refining throughput is about 11.7 million barrels per day, equivalent to 74% of operating capacity (Reference 1). However, of the total U. S. petroleum supply of some 16.2 million barrels per day, about 5.3 million barrels per day, or roughly 33%, represents imports of either crude or products. Dwindling domestic petroleum production is reflected in current rates which show that the year-to-year increase in refinery supplies of 1.24 million BPD was exceeded by the 1.46 million BPD increase in petroleum imports (Reference 1). Thus, domestic crude production did not keep pace, but decreased slightly. As this shortfall widens, security of supplies is increasingly threatened.

The United States has significant reserves of coal, shale, heavy crudes, and tar sands. Coal, because it is more hydrogen deficient than either shale oil or bitumen, is more difficult to convert into transportation fuels. Therefore, it is used mainly as a utility fuel and for producing metallurgical coke.

The extraction and subsequent upgrading of oil from western shale is about to get underway in Colorado on a demonstration scale of about

10,000 barrels per day. While the bulk of the fuel to be produced is committed to Department of Defense use, the quantity involved is small in comparison with total Department of Defense oil use of about 500,000 barrels per day.

To date, of the domestic heavy oil resources known to exist, only a small proportion are being produced, mainly in California. These crudes, having specific gravities in the range of 14-20 °API, are currently being processed into transportation fuels in refineries designed specifically for very low quality feedstocks. However, the refinery processes employed produce largely motor gasoline, while aviation turbine fuels, if produced at all, represent only a minor proportion of the product slate.

Presently, commercial production of bitumen from tar sands in this country is quite modest, although a number of pilot scale facilities have been planned or briefly operated. Leasing and development activities suggest significant commercial production from tar sands is unlikely before the early 1990's. By contrast, two tar sands plants are in commercial production in Alberta province of Canada, producing a synthetic crude oil from bitumen having a specific gravity in the range of 8-12 °API.

The first commercial extraction and upgrading plant, Great Canadian Oil Sands, Ltd. (a Sun Company subsidiary) started operation in 1967. The production capacity is now about 58,000 barrels per day of synthetic crude. The second plant, Syncrude, Ltd., is located next to the Great Canadian Oil Sands, Ltd. property. It started commercial production in 1976 and is designed to produce about 125,000 barrels per day of synthetic crude. Both use a hot water process to extract bitumen from surface-mined tar sands.

Although small by Canadian standards, U. S. tar sands deposits, coupled with heavy oil resources, could become a supplemental source of fuels for the Department of Defense, if not for the entire nation. However, since current refinery processing schemes are geared more for the production of

gasoline boiling range fuels, the suitability of these routes for efficiently producing high quality aviation fuel must be demonstrated. This program undertakes this assessment, as expressed in the following generalized program objectives:

- to identify a preferred processing scheme for producing JP-4 or JP-8 from bitumens/heavy crudes.
- to demonstrate its performance by supplying fuel samples at both laboratory and pilot plant scale.
- to perform an economic analysis of the fuel manufacturing venture, based on the preferred processing scheme.
- to determine the sensitivity of fuel selling price to variations in fuel quality produced by varying processing severity.

It is intended that this investigation be carried out in three discrete phases, as described below:

Phase I - Preliminary process analysis includes an evaluation of the potential of domestic tar sands and heavy oil resources to help satisfy the nation's requirements for military transportation fuels; screening of candidates, and selection for further investigation, of a preferred processing route for conversion of these low quality feedstocks into high quality, finished fuel products; and preliminary estimates of fuel manufacturing costs based on the selected processing schemes. The sensitivity of the processing scheme(s) to design parameters such as feedstock source, projected product slate, and plant capacity is also to be examined.

Phase II - Laboratory sample production - includes investigation and definition of the principal operating variables for the major processing steps comprising the recommended process scheme identified in the Phase I studies; small samples of prototype fuel made according to the

recommended processing scheme are to be prepared for evaluation by the Air Force; adjustments, as necessary, to the Phase I preliminary estimates of fuel costs will be made to reflect results of the laboratory tests.

Phase III - Pilot plant testing, final design and economics includes confirmation of the laboratory-estimated process operating parameters in continuous type pilot plant studies; development of design bases for detailed commercial plant cost estimates; economic analysis of fuel costs, including sensitivity to various economic assumptions; estimates of cost/quality/processing tradeoffs for production of fuels of varying quality; and preparation of pilot-plant sized samples of both specification and variable quality fuels.

Comprehensive contractor reviews at the conclusion of Phases I and II allow timely decisions on whether to proceed to the next succeeding program segment.

This report presents the results of Sun Tech's efforts in the Phase I portion of the program, consisting of the following elements:

Phase I - Preliminary Studies

Task	Activity
1	Resource Assessment
2	Evaluation of Upgrading Methods
3	Refining Process Selection
4	Process Flow Schematics
5	Plant Capacities and Costs
6	Cost Estimates

Where appropriate, results of several tasks have been combined for improved organization and presentation, in the following report sections.

SECTION II

RESOURCE ASSESSMENT

1. Background

Published long-range predictions of oil supply-demand through the year 2000 are understandably diverse, depending as they do on each forecaster's set of assumptions. While postulated rate of economic growth remains a basic economic element, more recent projections attempt to factor in the effect of supply disruptions resulting from such political influences as wars, revolutions, or other events. Absent these excursions, current expectations are that growth in oil demand for the last twenty years of this century will be modest by historic standards, possibly amounting to only about 10% (Reference 2).

Regarding supplies, declines in production from the North Sea and the United States are not expected to be fully offset by production increases elsewhere, while "synthetic oil" from alternative sources is expected to add little to the overall supply. Thus, one frequently held scenario is an increased U.S. dependence on oil imports from the OPEC countries. From one source, an approximate doubling of imports into the U.S. between now and the year 2000 is projected (Reference 3). Coupled with rising demand from other importing nations, the production capacity of OPEC, and especially the critical Arabian Gulf countries, could be strained by that time. Clearly, even modest contributions from alternate sources could play a significant strategic role in insulating this country from unfavorable geopolitical developments in the Middle East.

As the largest single user of petroleum products in the United States, the Department of Defense, and in particular the U. S. Air Force, is especially vulnerable to disruptions in the supply of petroleum crude. Development of alternate energy sources based on domestic resources is a necessity, if true national security is to be realized. This assessment of domestic tar sands deposits and heavy crude oil reservoirs serves to

define the potential of these fossil resources to supply a portion of the aviation turbine fuel requirements of the Air Force.

The processing of heavy crude oils and tar sands bitumens represents a significant step change from the dependence on sweet, light crudes typical of the 1970's petroleum refining industry. However, trends in the direction of lower crude quality have already begun. Depressed demand has resulted in shut-down of older refining capacity, which was designed for the higher quality feedstocks. In addition, large volume production start-up from Mexico, Alaska and the North Sea has backed out higher quality OPEC crude. Year-to-year changes in average crude run as calculated by the U. S. Department of Energy confirm upward trends in both crude sulfur content and specific gravity (Reference 3).

As a result of the above influences, the extent of poor quality domestic resources is now being examined in greater detail than it had been in the past. Some deposits have been known for decades, but until recently there was little incentive to define the extent and quality of the contained hydrocarbons. Several comprehensive studies have been published recently, addressing both the heavy crude and tar sands resources, and were the principal sources of the information which follows (References 4, 8).

2. Terminology

For clarification, definition of some of the more frequently used terms is presented below:

Heavy crude oil — Petroleum crude oil which has a specific gravity of 20° API or less, and is mobile, i.e., it has a viscosity of 10,000 centipoise or less, at the reservoir temperature. A sub-category of extra heavy crude oil is sometimes defined as that crude oil which has a specific gravity of 10° API or less, yet still exists as a mobile liquid in the reservoir. Since only a

small proportion of heavy crude oil qualifies as extra heavy, no distinction is made in this discussion.

Bitumen — Hydrocarbon deposit which is essentially immobile, i.e., has a viscosity exceeding 10,000 centipoise, at the reservoir temperature. It will usually have a specific gravity of 12° API or less when extracted from surface mined tar sands. However, bitumen produced by thermal in-situ methods may have a specific gravity of up to 20° API, depending on the method of recovery and the severity of the recovery operation. Similarly, bitumen recovered by solvent extraction technique, wherein solvent removal is incomplete, may no longer display original or in-situ properties.

Tar sands — A deposit of bitumen intimately associated with mineral matter in either a consolidated (rock-like) or unconsolidated (sand-like) state. Unlike shale deposits, in which the organic material (kerogen) can only be separated from the mineral by undergoing chemical decomposition (retorting), the bitumen in tar sands is separable by physical means such as solvent extraction or flotation.

Synthetic crude — Sometimes also referred to as syncrude, the term is usually used to denote a hydrocarbon mixture with some properties similar to petroleum crude oil, but which has been prepared by upgrading another substance such as bitumen, oil shale, or coal. Depending on the source and upgrading process, however, there may be only a passing resemblance to conventional petroleum crude oil.

Resource	The quantity of hydrocarbon that exists within a deposit or reservoir, without regard to the technical or economic practicability of its recovery. The estimate or calculation is based on sufficient data (core analyses, outcroppings, geological patterns) that there is a high probability that the hydrocarbon exists, in at least the volumes indicated.
Speculative resource	An estimate of the amount of hydrocarbon that may exist within a geographical area, but for which the available data are not sufficient to categorize the area or deposit as a resource. May also be referred to as undiscovered or poorly-known resource. In this report, the term is used only in connection with the tar sands estimates.
Reserve	An estimate of the amount of hydrocarbon within a deposit or reservoir that is recoverable, based on current technology and economics. For many tar sands deposits, these criteria are not well defined, and sometimes an arbitrary assumption is made that the reserve quantity amounts to 10% of the resource figure. Heavy oil reserves, on the other hand, are treated somewhat differently by investigators, resulting in the following two categories of reserves.
Proven reserves	Hydrocarbon contained within a heavy oil resource, for which there is a high probability that it can be produced under the conditions of 1) application of primary recovery methods, only, and 2) a market value for the oil of approximately $25/barrel.
Potential reserves	Hydrocarbon contained in a heavy oil resource, for which the probability of recovery is substantially lower than for the proven reserves, for one or more of

the following reasons: 1) geological data is less comprehensive, 2) secondary or tertiary recovery methods may be required, or 3) recovery costs are not expected to be supported by a market price of approximately $25/barrel.

3. Heavy Oil

a. Size of the resource

Numerous heavy oil reservoirs are located primarily within the several mid-continent and western states wherein substantial reservoirs of conventional (i.e., gravity >20° API) crude oils are also found. Many are too small to support commercial recovery operations. In this compilation, a significant resource is considered as containing more than one million barrels of heavy crude oil. The summation of these significantly sized deposits is currently estimated at about 33 billion barrels.

The distribution of this heavy oil resource, by state, is shown in Table 1. As indicated, the greatest accumulations are found in California and Texas, which account for over three-fourths of the total. Of these 33 billion barrels, it is estimated that no more than about 6%, or 2 billion barrels, fall in the category of extra heavy crude oil (i.e., gravity <10° API), and so this class has not been separately tabulated.

Table 1 also includes current estimates of heavy crude oil reserves, both proven and potential. The former total 5 billion barrels, i.e., crude considered recoverable applying current technology and economics. An additional 15 billion barrels of potential reserves have been estimated, which may be recoverable under a somewhat more liberal set of technologic and economic assumptions.

Recent industry statistics help place these heavy crude oil resource and reserve estimates in perspective. At year-end 1980, proved domestic

crude oil reserve estimates were 29.8 billion barrels, while estimated undiscovered recoverable crude oil resources were 82.6 billion barrels (Reference 6).

Much of the heavy crude oil resource is concentrated in a few very large reservoirs. Table 2 lists some of the specific pools and their respective sizes.

Given the nigh proportion of heavy oil resources located in California, it is not surprising that California also dominates in the proportion of heavy crude produced. Current production of heavy crude oil is estimated at about 0.22 billion barrels per year or 640,000 barrels per day (Reference 4). Of this, some 85% is produced from fields located in California. This production rate is still relatively modest, however, compared to current annual domestic refinery crude runs of about 5 billion barrels per year or 13 million barrels per day. Thus, current domestic heavy crude oil production accounts for possibly 5 percent of the total domestic refinery crude run, but it is more than equal to the Department of Defense consumption rate.

b. Heavy oil quality

By definition, heavy crude oils are those with specific gravity less than 20° API, as compared to more conventional crude oils which have specific gravities in the range of 25 to 45° API. Certain physical and/or chemical characteristics are generally associated with heavy crude oils that influence, usually detrimentally, their handling and processing. In addition to these general characteristics, others can be identified that may have an equal or greater impact on crude processing. These properties may or may not fall outside the range usually found for conventional crudes, and are highly specific to the particular reservoir. Accordingly, the impact on handling and processing is less certain and may vary widely.

Table 3 lists some of the more prominent within these two categories of feedstock properties. Under general characteristics, heavy crude oils typically will have relatively high pour points and viscosities. Thus, for acceptable flowability or pumpability, it may be necessary that they be diluted, or heated and maintained hot. These same two properties will result in less efficient heating, as well. As crude density approaches that of water (specific gravity = 1.0, or 10° API), desalting and/or dewatering of the crude before processing becomes more difficult. Further heating or addition of a lower boiling diluent may be required to achieve reasonable phase separation rates and to prevent formation of intractable emulsions.

The higher densities characteristic of heavy crude oils arise from the higher proportion of high molecular weight compounds present. Many are highly condensed systems, not volatile enough to be distilled. Accordingly, the heavy crudes contain much lower proportions of distillate fractions and have higher residuum contents.

Chemical bonds must be broken in order to reduce the boiling points of the high molecular weight compounds to a range suitable for fuel use. The bigger and more populous these high molecular weight compounds are, the more extensive the chemical conversion must be. The degree of difficulty of this task can be correlated with the asphaltene content or with the amount of carbon residue which is left after destructive distillation.

Heavy crudes contain non-hydrocarbons, the concentrations of which appear to be specific to a certain reservoir or strata, and not necessarily characteristic of the entire class. They will, however, contribute to the processing requirements. High concentrations of heteroatoms (i.e. sulfur, nitrogen, and oxygen) are undesirable in finished fuel products because they are usually associated with poor thermal or storage stability, corrosiveness, or increased emissions upon combustion. Therefore, processing must be adequate to reduce these compound types to

acceptable levels. In many cases, processing in a hydrogen atmosphere is required.

Heavy crude oils may also contain trace metals (e.g., iron, nickel, vanadium) in organic form and in quantities significant enough to be a problem. Those compounds contained in refinery stocks tend to be of low volatility and are usually retained in vacuum gas oil or residual fractions. However, when present in feed to a processing unit, they can foul equipment, catalyst, or finished products, causing costly shutdowns. If amounts contained in fuel products are too high, combustion equipment is also liable to fouling and corrosion.

Table 4 lists some physical and chemical characteristics of a selection of domestic heavy crude oils. The percent distilled at 745°F figures are low and the carbon residue contents are relatively high for all. However, it is also apparent that there are significant differences among other properties which prevent treating all heavy crude oils as a group. For example, the ratio of sulfur content to nitrogen content ranges from over 20:1 at one extreme to nearly 1:4 at the other.

c. Heavy oil upgrading

During the past five years, refiners in the U.S. have invested over 6.7 billion dollars to modify and/or install new equipment to handle heavy/sour crudes. The following processing capacities were installed during this period:

Coking/resid hydrodesulfurization	900,000 BPSD
Fluid catalytic cracking	900,000 BPSD
Middle distillate hydrodesulfurization	800,000 BPSD
Catalytic reforming	280,000 BPSD
Alkylation/isomerization	160,000 BPSD

Due to the depletion of sweet crude reserves and widening margins between light and heavy crude oil prices, refiners have decided these huge capital expenditures to permit handling heavy crudes are justified. The heavy oil upgrading processes vary from company to company, but basically two approaches are employed -- carbon removal or hydrogen addition.

Usually, the heavy crude is first fed to a crude fractionation tower, the bottoms from which are then upgraded by thermal or solvent processes to produce gasoline, naphtha, kerosene, gas oil fractions, and reduced bottoms or coke. The distillate fractions may require hydrotreatment to remove contaminants and to increase the carbon/hydrogen ratio. Depending on the desired product slate, these fractions may also be further hydrocracked, catalytically cracked, or catalytically reformed to produce premium fuels.

When carbon rejection type processes are employed to upgrade residual fractions, the chemical reactions which occur produce an increase in the hydrogen to carbon ratio in the more volatile liquid fractions. At the same time, the resultant upgraded residue, which may be a pitch or coke, contains increased levels of carbon, heteroatoms, and trace metals. These low valued products can sometimes be disposed of as low grade fuels, as construction materials or as gasifier feeds.

The chemical reactions may be carried out in a strictly thermal environment, or they may be catalyzed. In addition, some concentration of the carbon, trace metals and contaminants can be accomplished by strictly physical means such as extraction with selective solvents. Examples of commercially demonstrated processes in each category are:

- Cracking, thermal
  - visbreaking
  - Eureka cracking
  - delayed coking
  - fluid coking

Flexicoking
ART process

- Cracking, catalytic
  heavy oil cracking

- Solvent refining
  solvent decarbonizing
  solvent deasphalting
  ROSE process
  DEMEX process

In hydrogen addition type upgrading processes, hydrogen is introduced into the molecules, generally under conditions of high temperature and high hydrogen partial pressure. Since hydrogen processing is costly, the reactions are usually carried out more efficiently in the presence of a catalyst, in one of several forms (e.g. fixed bed or expanded bed, pellet or powder, supported or bulk).

Addition of hydrogen serves to saturate condensed aromatic ring structures, making them less susceptible to thermal reactions and consequent coke formation. Scission of carbon-metal and/or carbon-heteroatom bonds is necessary to liberate sulfur and nitrogen for capture from the gas phase, and to reduce trace metals content. As a result, some low boiling material is produced, the amount depending on the severity of the operation, which in turn depends on the amount and nature of the contaminants in the crude. Crudes containing excessive metals can poison catalyst active sites, and solvent demetallization or thermal hydrogenative processes may be indicated.

If the principal emphasis in the hydrogenative processing is contaminant removal, hydrotreating catalysts and processes are employed. When the additional objective is molecular weight reduction, the process is known as hydrocracking and catalysts with high cracking functionality are

used. Examples of commercial processes, suitable for residual feedstocks, in each of the two categories, are listed below:

- Hydrotreating
  - RCD Unibon
  - RDS & VRDS
  - Resid HDS
  - Residfining
  - Unicracking/HDS
  - Shell HDS

- Hydrocracking
  - H-Oil
  - LC-Fining
  - VEBA-Combi-cracking

Many of the hydrogen addition processes are proprietary developments by member companies within the petroleum refining industry.

4. Tar Sands

a. Size of the resource

Numerous deposits of bitumen-impregnated tar sands have been identified in scattered locations throughout the southern and western United States. However, of some 550 sites which have so far been identified, less than fifty are considered to contain significant amounts of bitumen (Reference 8). For the purpose of this review, a significant deposit is considered to be one which contains at least 100 million barrels of bitumen. This size would be sufficient to support a processing plant with a nominal throughput of 5,000 barrels per day for a 20-year period, if a nominal bitumen recovery of 33% could be realized (establishing this size criterion is highly arbitrary; it implies nothing about the recovery from a specific deposit).

Major domestic deposits of tar sands occur in Utah, California, Kentucky, Texas and Alabama. Since the production of bitumen from these deposits is a relatively undeveloped technology in this country, many sites have yet to be fully explored and the actual hydrocarbon content defined. Thus, the bitumen resource data summarized in Table 5 are expressed as either resource or as speculative resource, depending on the extent of the available geological data.

As indicated in Table 5, estimates of significant tar sands resources total about 53 billion barrels. These consist of about 22 billion barrels of known resources and about 31 billion barrels of speculative, or poorly known resources. Nearly half of the tar sands resource is located in Utah. However, other factors (water rights, pristine area preservation, remoteness) could result in more rapid development of the resource in other states which may implement more aggressive development policies.

Estimating reserves for tar sands deposits is even more subjective than preparing such estimates for heavy oil reservoirs. From a practical standpoint, each deposit would have to be thoroughly characterized with respect to such parameters as resource size, depth of overburden, depth of deposit, bitumen saturation, mineral (rock and clay) characteristics and, of course, extraction efficiency. However, little of this site-specific information has as yet been developed. Therefore, reserve estimates for the tar sand deposits have been arbitrarily assumed to be a uniform 10% of the resource. On this basis, tar sand bitumen reserves are estimated to be in the neighborhood of 5 billion barrels.

In perspective, the estimated 5 billion barrels of bitumen reserves compares with recent estimates for proved domestic crude oil reserves at year-end 1982 of 27.9 billion barrels (Reference 9). At the indicated production rate, this U.S. crude oil reserve represents about 9-1/2 years supply.

Table 6 lists some of the specific reservoirs and their respective sizes for those states with the larger and better defined resource.

b. Nature of the resource

The characteristics of tar sands deposits can vary widely, and will impact both the recovery technology and the processing technology. Qualitative effects can be projected, but specific processes will generally be developed for each deposit. Deposit characteristics of concern include the following:

Overburden depth - for deposits with less than 100 feet depth of overburden, surface mining of the sands, combined with bitumen extraction methods may be applied. If deposits are more than 200 feet below the surface, in-situ production methods are indicated. Approximately 90% of the tar sands resource is found at depths greater than 100 feet, and thus unlikely to be surface mined. Estimates of mining methods and costs have been published (Reference 10).

Bitumen saturation - the richness of the deposit, or bitumen content, directly impacts recovery economics, especially for surface mined sands. Within any deposit, bitumen assay can cover a broad range, so comprehensive, accurate ore analyses are a must. The breadth of bitumen assays is illustrated by the following:

Locale	Wt.% bitumen
Alabama	3 - 14
California	8 - 12
Kentucky	4 - 7
New Mexico	2 - 6
Utah	7 - 17
Alberta, Canada	<1 - 18

A nominal bitumen content of 7 wt.% is equivalent to about 15 gallons of bitumen per ton of tar sand. It can be appreciated that surface mining of tar sands becomes one gigantic earth moving operation. At an ore assay of 7 wt.%, at least 40,000 tons of sand must be moved daily to yield 7,500 BPD of bitumen, and that total does not include overburden.

Mineral properties - rock geology is an important factor affecting bitumen recovery processes. For surface mined tar sands, for example, unconsolidated sands require little pretreatment, whereas consolidated mineral needs extensive crushing to gain access to the associated bitumen. For in-situ recovery processes, the relatively high porosity and permeability of unconsolidated sands will allow better flow of bitumen to the producing wells.

Clay minerals can also be present in tar sand reservoirs, and reduction of the clay content of the recovered bitumen can sometimes be more difficult than control of the amount of sand present. This is because 1) the clay particles are extremely small and settle very slowly, and 2) the tendency of clay particles to flocculate and settle as if they were larger particles is highly sensitive to the pH of the aqueous medium used in some recovery processes.

c. Mineral separation

The nature of the forces binding the bitumen molecules to the mineral surface can also affect the type and efficiency of the bitumen recovery process applied to surface mined sands. For deposits in which a thin film of water is interposed between the sand grain and the bitumen, water-based processes (hot water, cold water) are effective. In these, the added water combined with shear forces tends to lift the bitumen film off the sand grain. Bitumen is separated from the slurry phase by coalescing, gravity separation, or froth flotation, or by combinations thereof.

For deposits in which the bitumen film is in direct contact with the sand granules, water is not a sufficiently strong solvent to overcome these interfacial forces, and better solvents are often employed, either alone or in conjunction with water. Thus, aqueous systems augmented by hydrocarbon solvents such as naphtha, kerosene, or toluene are effective, as are totally non-aqueous systems based on either hydrocarbon or chlorinated hydrocarbon solvents. Each technique introduces unique solvent recovery challenges.

Other approaches to the separation of bitumen from mineral are being studied. The various in-situ recovery methods accomplish the separation within the deposit, in most cases by increasing the reservoir temperature (steam flooding, in-situ combustion). The hydrocarbon viscosity is thereby lowered sufficiently that the bitumen can be driven toward the production wells. Some thermal conversion of the bitumen can occur during this process, so the produced bitumen may have different properties than the bulk reservoir, depending on the severity of the recovery process.

Separation of the mineral from the bitumen has also been combined with an upgrading step in some process configurations applicable to mined tar sands. Retorting of the tar sands produces a liquid fraction not unlike that obtained by coking the bitumen, while coke is deposited on the sand granules. Thermal efficiency can be improved by subsequent combustion of the deposited coke.

d. Bitumen quality

Compared to conventional petroleum crude oils, bitumens as a class may display most, if not all, of the following characteristics:

- higher molecular weight, resulting in higher viscosity and higher specific gravity (lower API gravity).
- reduced content of lower boiling fractions, and increased content of higher boiling and non-distillable (e.g., >1000°F) fractions.

- lower hydrogen to carbon ratio and higher asphaltenes content.
- higher content of heteroatom species (i.e., sulfur, nitrogen, and oxygen compounds)
- trace metals usually associated with asphaltene molecules (e.g., nickel, vanadium, and iron) are generally increased.

In addition, the bitumen may contain significant quantities of mineral matter (sand or clay), depending on the specific deposit characteristics, the type, and the efficiency of the bitumen recovery process used.

As a result of the above characteristics, converting bitumen to quality liquid fuels becomes a considerably more severe operation than that required for conversion of conventional petroleum crudes. Although the processing objectives may be the same, viz.

- separation of inorganic contamination (desalting, desilting)
- molecular weight reduction (cracking)
- reduction in heteroatoms and trace metals (hydrotreating, sorption, extraction)
- increased hydrogen to carbon ratio (hydrogen addition, carbon rejection)

the physical and chemical operations that accomplish them must be carried out under more extreme operating conditions.

In many respects, the conversion of bitumen to transportation fuels is not unlike the conversion of heavy crude oil, and the processing techniques described previously in Section II-3-C are generally applicable.

Because domestic tar sands have not been subjects of exhaustive exploration or production, physical and chemical property data contained in the literature may derive from only a few samples. Thus, some risk exists that the reported data may not be representative of the entire resource. Further, the method used to recover bitumen from mineral can influence bitumen properties.

With these qualifications, characteristics of bitumens from some of the larger deposits have been collected in Table 7. Data are also included for bitumen from the Athabasca tar sands, for reference purposes.

Perhaps the most striking feature of these data is their diversity. Compared to the heavy crudes of Table 4, the bitumens are much less volatile, less mobile, and produce considerably more carbon residue. Heteroatom contents, however, fall in the same broad ranges as for the heavy crudes.

SECTION III

PROCESSING TECHNOLOGY

1. Introduction

The purpose of this segment of the study was to evaluate the potential of, and to recommend one of several candidate alternative processing schemes for converting very low quality feedstocks into aviation turbine fuel and other transportation fuels. The processing alternatives have been broadly categorized as upgrading methods and refining methods, with the following distinctions. Upgrading refers to that initial exposure of feedstock to reaction conditions such that the physical and chemical properties of the material are significantly altered, compared to its as-received condition. Upgrading excludes, then, such very important preliminary operations as resource extraction, feedstock desalting, and crude distillation.

Almost by definition, the products of the upgrading step do not meet the yield or performance requirements of the end use application. Further chemical conversion steps are required to refine the intermediate streams into finished products. These secondary conversion processes have been referred to as refining methods. The generalized processing scheme is illustrated in Figure 1.

The study envisioned a grass roots integrated upgrading/refining operation, supplied the appropriate feedstock, and operated to produce maximum yields of JP-4 grade aviation turbine fuel. The recommended upgrading process for detailed investigation in Phase II was to be selected from one of four candidates. When suitably matched to selected refining operations, it should be capable of converting each of the four heavy feedstocks into high yields of acceptable quality turbine fuel. The processing schemes did not include the resource extraction step. In practice, however, integration of the extraction and upgrading steps might be highly advantageous, although the particular combination chosen would be highly site specific.

The upgrading options considered in this evaluation included:

- delayed coking
- hydrovisbreaking
- asphalt residual treating (ART process licensed by M. W. Kellogg Co.)
- severe hydrotreating

These processes are described in more detail in Sections III-3 and IV-3 of this report.

Refining processes were selected on the basis of estimated characteristics of the upgrader products, and on the ability of the refining process to maximize the production of aviation turbine fuel. The options chosen were specific to the boiling range of the fraction being refined:

Naphtha fraction	Distillate fraction
Hydrotreating	Recycle hydrocracking or Fluid catalytic cracking*

* for comparative purposes only

To obtain high yields of products in the JP-4 boiling range, naphtha fractions from the upgrader were hydrotreated to obtain acceptable turbine fuel blend stock properties. To these were blended liquids in the same nominal boiling range which were produced by recycle hydrocracking the distillate cuts from the upgrader. Since the hydrocracking operation usually produces a liquid volume recovery exceeding 100%, liquid product yields by this sequence would be expected to approach maxima. Further, yields of residue or bottom-of-the-barrel products would be at a minimum.

Included as a special case was a brief evaluation of a minimum fuel cost process scheme, in which the slate of transportation fuel products more nearly approached the manufacturing capability and consumption patterns prevailing over most of the nation. This fluid catalytic cracking (FCC) variant permitted comparison with the maximum aviation fuel cases which comprised the bulk of the studies.

During the study, four different feedstocks were to be considered. Coupled with the consideration of four different upgrading processes and other alternatives of interest to the Air Force (e.g. JP-4 vs. JP-8 manufacture; multiple transportation fuels vs. all turbine fuels) the number of potential case studies proliferated, and consideration of all possible permutations became impractical. Therefore, only certain combinations of feedstock, upgrader, refining, and product slate were included in the case studies performed.

In addition to the above study parameters, the Air Force established the following guidelines:

- the processing route should be commercially viable and environmentally acceptable

- overall process thermal efficiency should be at least seventy percent

- production of residual products (coke, resid fuel) should not exceed ten weight percent of feed.

- catalysts should achieve reasonable life, e.g. one year.

Within these limits, Sun Tech has elected to employ non-proprietary processes where feasible, to allow maximum disclosure of program details such as pilot plant operating conditions, process yield patterns, and catalyst compositions.

2. Feedstocks

While the resource assessment described in Section II was being performed, Sun Tech and the Air Force identified three domestic tar sands bitumens which at the time appeared to have a high potential for attracting commercial operators and large scale development. The bitumens selected represent a range of geographical deposits as well as recovery/extraction methods:

State	Locale/Process
New Mexico	Santa Rosa; solvent extraction
Kentucky	Big Clifty; Kensyntar in-situ combustion
Utah	P. R. Springs; solvent extraction

The fourth feedstock was to be a domestic heavy crude oil. The resource assessment studies indicated it ought to be a heavy crude (specific gravity between 10° and 20° API) rather than an extra heavy crude (specific gravity less than 10° API). Recent discoveries among the offshore California reservoirs looked promising, but information on production rates, and especially crude characteristics, was scarce at this early stage in the development of these fields. It was decided, therefore, to select a representative onshore heavy California crude, Santa Maria Valley crude, which appeared similar to some of the larger offshore California discoveries.

Since samples of the four feedstocks had not yet been obtained, selected published and unpublished sources were used to estimate their properties. For the bitumens, processing consisted of feeding the as-received material directly to the upgrading unit. The California crude, on the other hand, contained sufficient distillable material of suitable volatility that crude fractionation was indicated. Therefore, the heavy crude oil passed first through an atmospheric crude tower to yield a straight run naphtha, an atmospheric gas oil, and a 650°F+ bottoms fraction. The 650°F+ bottoms fraction was processed through

the upgrader, while the straight run fractions bypassed the upgrader and were combined with comparable cuts from the upgrader, for downstream refining.

Table 8 summarizes estimated physical and chemical parameters of the four upgrader feedstocks, viz. the three full-boiling bitumens and the 650°F+ fraction of the Santa Maria Valley crude[1]. They have certain general features in common, compared to more conventional petroleum refinery feedstocks. These characteristics include very high specific gravity, very high proportion of non-distillate material, moderate to high nitrogen content, very low hydrogen content, and very high carbon residue.

Trace metals contents, particularly vanadium plus nickel, are within the range of some conventional crudes, and even much lower than others. Ash contents appear reasonable; however, these could vary widely depending on the effectiveness of the bitumen recovery method employed.

Compared to the three bitumens, the atmospheric bottoms fraction of the heavy crude has an even lower API gravity, higher sulfur content, but a comparable nitrogen content. Based on other California crudes, trace metals for the Santa Maria atmospheric residuum would not be expected to be significantly higher than the worst of the bitumens. Therefore, none of the feeds should pose extraordinary processing difficulties, from the trace metals standpoint.

Across the four feedstocks, the proportion of sulfur to nitrogen varies by nearly a factor of 10, from 0.8 to 6.4 on a weight basis. A similar variability in the upgraded liquids could impact subsequent refining operations, whereby each liquid fraction might require dissimilar yet very specific catalyst performance.

[1] Properties of the 650°F+ fraction were estimated, based on reported properties of the whole crude, as listed in Appendix A.

3. Upgrading Alternatives

The number of potential heavy oil upgrading processes easily exceeds twenty, so a considerable shortening of the list of candidates was necessary. Many were excluded because they were proprietary processes, for which detailed operating and design data were expected to be difficult to acquire. Of the four evaluated by Sun Tech, two are in the class of carbon rejection processes, and two are hydrogen addition processes:

Delayed coking -	a mature technology which is currently being practiced commercially and provides a credible Base Case against which the alternative upgrading schemes can be compared
ART - (Asphalt Residual Treating)	a recent development of Engelhard Corp. and licensed by M. W. Kellogg Co., in which the heavy feedstock is contacted with fluidized material upon which coke and metals are deposited. Coke burned from the circulating solids allows re-use of the contact material. Fresh make-up is added and a drag stream of equilibrium contact material taken, to accomplish metals removal from the system
Hydrovisbreaking -	a non-catalytic hydrogenative residuum conversion process which Sun Tech has proposed as a prime candidate for an alternative to delayed coking
Severe hydrotreating	processing of the heavy feedstock(s) over a fixed bed of hydrotreating catalyst may be a practicable mode of upgrading, provided the metals and/or minerals content of the feedstock is within reasonable limits (e.g. <200 ppm)

Each of the four upgrading steps is capable of producing an upgraded material or a synthetic crude amenable to further refining into finished fuel products. The naphtha fraction in the upgrader effluent would be further refined by fixed bed hydrotreating to saturate olefins plus some aromatics and to eliminate heteroatom species. The gas oil portion of the syncrude would require similar clean-up, but in addition would need considerable molecular weight reduction to yield maximum product in the aviation fuel boiling range. The particulars of the downstream processing, to meet a target product slate or other programmatic needs, are discussed in the following section for the individual case studies performed.

4. Upgrading/Refining Case Studies

Case studies were generated to evaluate process parameters of either primary or secondary interest:

	Process Parameters	
Emphasis	Primary	Secondary
	Upgrading process (4)	Product slate (3)
	Feedstock source (4)	Gas oil cracking mode (2)
		Hydrogen source (2)

The numerals in parentheses indicate the number of levels of each parameter. Thus, there were four feedstocks of interest, and four upgrading processes to be assessed, among the primary variables. This subset constituted the "core cases" which were examined within a series of eleven case studies (a study of all possible combinations would have required sixteen case studies).

For the parameters of secondary interest, comparisons were on a one-to-one basis. The secondary parametric studies involve variations downstream of the upgrader; therefore, the case studies of these effects required integration with one of the eleven core cases. The particular

core case chosen for making these special case studies was varied to fit the particular case study details.

Within the set of core cases, individual case studies were coded for convenience and to facilitate data transfer, using combinations of alphanumerics, as follows:

"Case ___ ___ ___"

wherein the first symbol represents the type of upgrader being evaluated, according to the code

B = delayed coking (base case)
X = hydrovisbreaking
Y = ART process
Z = residuum hydrotreating

and the second symbol represents the source or type of feedstock, according to the code

1 = bitumen from New Mexico
2 = bitumen from Kentucky
3 = bitumen from Utah
4 = heavy crude from California

For the one-of-a-kind peripheral case studies, the pattern is less consistent and in some cases a 3-symbol code was used.

The array of case studies performed is represented in Figure 2. Eleven core cases embody variations in the primary process parameters of feedstock composition and upgrading process. Each supplies the downstream refining section, comprised of naphtha hydrotreating and gas oil hydrocracking. Four satellite case studies encompassed the secondary or downstream process parameters.

Block flow diagrams for the eleven core case studies are illustrated in Figure 3 for each of the four types of upgrader. Since delayed coking served as a reference case, all four feedstocks were considered in the B series of case studies (Figure 3a). Hydrovisbreaking, which was nominated as a prime candidate for the upgrading step, was also applied to all four feedstocks, in the X series of studies (Figure 3b). For the ART upgrading process (Figure 3c), two feedstocks were considered, the bitumen from Kentucky and the California heavy crude oil. For upgrading by severe hydrotreating, only Case Z1 was generated, using the New Mexico bitumen as feedstock (Figure 3d).

Case studies addressing downstream process variants, are illustrated in views e and f of Figure 3. In Case X5 (Figure 3e), fluid catalytic cracking converts the distillate cut from hydrovisbreaking California heavy crude residue into a multi-transportation fuels product slate (i.e. gasoline, diesel and residual fuel in addition to JP-4). It is compared with Case X4, which produces mainly JP-4 via catalytic hydrocracking of the same gas oil.

In Case X6 (Figure 3f), the effect of producing JP-8 aviation fuel, rather than JP-4, from hydrovisbroken Kentucky bitumen is examined. Process configuration changes are modest, consisting of variations in intermediate stream cut points. Excess light naphtha is an additional product. This case is compared with Case X2.

Case X4A resembles Case X4 in fundamentals, and the flow diagram of Figure 3b applies. The difference is in the way plant hydrogen is generated. In both cases, JP-4 product is made by hydrovisbreaking the California heavy crude oil residue, followed by naphtha hydrotreating and gas oil hydrocracking. Hydrogen for these operations is generated, in Case X4, by steam reforming of the light hydrocarbon fractions recovered from various process sections. In Case X4A, by-product residuum is withdrawn from the heavy fuel oil pool and supplied to an oxygen-fed partial oxidation unit for generation of the required hydrogen.

Case X4B was added to the program in the course of these studies, when the results raised a question regarding the effect of varying the conversion level of the hydrovisbreaking operation. It is comparable to the parent Case X4, viz. production of JP-4 fuel from the California heavy crude oil by a combination of hydrovisbreaking plus naphtha hydrotreating and gas oil hydrocracking (also Figure 3b). The hydrovisbreaker operates at somewhat more severe conditions in Case X4B, however, producing a nominal conversion of 90% compared to the 85% of Case X4.

5. Process Estimates

Plant operating conditions and yield structures were estimated for each of the upgrading or refining steps in the proposed process scheme and for each feedstock or intermediate stream. Where necessary, feedstock characterization data were estimated if published data were insufficient. In addition, some process estimates were obtained using kinetic or correlation based computer models which had been derived from performance with conventional petroleum crudes or fractions, rather than with the heavy feeds assumed in these studies. The impact of these collected uncertainties on the accuracy of the resultant estimates is not known.

In this section, process estimates are presented, first, for the various upgrading processes, followed by those for the respective refining sections. A nominal capacity of 7,500 BPSD was selected for the tar sands processing plants, in recognition of the limited size of most domestic tar sands deposits. On the other hand, heavy crude oil deposits are somewhat more extensive, more accessible, and the recovery of the hydrocarbon somewhat more facile. Therefore, a nominal plant throughput of 50,000 BPSD was assumed when dealing with the heavy crude.

a. Delayed coking

A mathematical model of the delayed coking process, developed by Sun Tech, was used to estimate coking performance for all four feedstocks. Operating conditions similar to those employed commercially for the coking of bitumen from the Athabasca tar sands deposits were assumed. Product yields were developed based on the available inspection data for each feedstock.

Detailed estimates of operating conditions and yield structure for the delayed coking process are presented in Appendix B, Tables B-1 through B-4. Highlights of the process estimates are summarized in Table 9 for the four feeds. Yields of coker distillate, i.e. C_5+ liquid, fall within a relatively narrow band, from about 78 volume percent for the New Mexico bitumen to 85 volume percent for the bottoms cut of the California heavy crude. Liquid yields vary inversely with the carbon residue content of the feed. The sulfur and nitrogen contents of the coke and liquid fractions move in concert with those of the feedstock, as expected. Considerable refining is indicated to reduce sulfur and nitrogen contents of the naphtha and gas oil fractions to acceptable fuel quality levels.

For the heavy oil, refining of the coker naphtna and gas oil may not be quite as severe as suggested by the sulfur and nitrogen contents in Table 9, because they will first be blended with the straight run naphtha and atmospheric gas oil fractions which were removed during crude fractionation. Therefore, sulfur and nitrogen contents of the combined feed to the naphtha hydrotreater or to the gas oil hydrocracker will be slightly lower than indicated in Table 9. Even with this dilution, however, these streams are equivalent in nitrogen content and considerably greater in sulfur content than comparable streams from coking the bitumens, and refining them to stable fuel products will require more severe processing conditions than the bitumen-derived coker distillates.

Coke yields for all four feeds are high and the coke clearly has no value for metallurgical applications. Net coke make will be lower than shown

in the table if coke is used to fire boilers or is supplied to a partial oxidation unit to generate hydrogen.

b. Hydrovisbreaking

Estimates of hydrovisbreaking conditions and material balances for the four feeds were based on in-house laboratory and pilot plant data acquired over a number of years and with a selection of feedstocks, including Athabasca bitumen. Results were projected for operating conditions which would convert all but about 10 volume percent of the charge to products boiling below 1000°F.

Four feedstocks to hydrovisbreaking were considered. Supplemental case studies addressed variants in either downstream refining, product distribution, or hydrovisbreaking severity. In some cases, the hydrovisbreaker estimates were usable without adjustments for more than one case study. The data tables indicate the appropriate case study for which each data set applies.

Estimated processing conditions and yield structure for hydrovisbreaking the three bitumens and one heavy crude residue are presented in detail in Appendix C, Tables C-1 through C-6. Table 10 summarizes these estimates.

As indicated in Table 10, the yields of C_4+ liquids generally exceeded the volume of feed to the hydrovisbreaker by about 1 to 5 volume percent. This yield increment appears to narrow as feed API gravity decreases. Compared to the delayed coking yields, about 2 to 10 volume percent more resid-free C_4+ liquid is produced when hydrovisbreaking at the 90% conversion level.

At about 900 SCF/bbl, hydrogen consumption amounts to just over 1 weight percent of charge. As a result, sulfur content of the hydrovisbroken naphtha and gas oil streams is reduced, compared to the respective coker distillates. The feed nitrogen is less easily removed than the sulfur,

however, and the nitrogen contents of respective hydrovisbroken and coker distillates were more nearly alike. In general, product nitrogen and sulfur contents moved up or down in harmony with their concentrations in the feeds.

c. Asphalt Residual Treating (ART)

This relatively recent development has been promoted for upgrading heavy feedstocks. It employs a fluidizable contact material (ARTCAT™) onto which are deposited coke precursors plus metals-, sulfur-, and nitrogen-bearing compounds during processing of heavy feeds. Being inert, the contact material converts little of the lower boiling fractions present, before it passes to the regenerator where the coke is burned off. The process equipment resembles the very familiar fluid catalytic cracking units found in most petroleum refineries. The ART-treated effluent is then refined to finished products by conventional means.

In the absence of detailed process information in the open literature, preliminary yield and cost estimates were obtained from the process licensor, The M. W. Kellogg Company, for the Kensyntar bitumen and the Santa Maria Valley crude oil. The results were subsequently integrated with Sun Tech estimates of the downstream refining sections to complete the refinery case studies. As in other case studies employing the California heavy crude, straight run atmospheric distillates (naphtha and gas oil) are removed from the crude and bypass the upgrader. Tables D-1 and D-2 of Appendix D present vendor-supplied process details for the Kensyntar bitumen and Santa Maria atmospheric residue, respectively. Process operating conditions were not provided.

Table 11 summarizes the process estimates for ART processing of the two feeds. Of note, coke deposited on the contact material (and then burned off) is about one-half the amount estimated to be produced by delayed coking. After treating, a significant proportion of the product remains

liquid which boils above 1000°F, although metals content of the atmospheric bottoms is very reasonable at 15-20 ppmw.

The licensor notes that a laboratory-proven technique for reclamation of spent contact material has been developed. A substantial reduction in the consumption rate of this material, compared to the rates shown, was claimed for a plant so-equipped. Reclamation of spent contact material was not included in these process estimates.

d. Severe hydrogenation

In Section II-3-C, catalytic hydrogenative processing of heavy feeds was classified as either hydrotreating or hydrocracking, depending on the processing objectives. Generally, the commercial processes designed for high cracking activity are carried out in an expanded bed mode, to facilitate replacement of spent catalyst without shutting down the unit. The processes are available under license, currently from two sources. On the other hand, residuum hydroprocessing over fixed catalyst beds, for which non-proprietary catalysts may be available, are more often for hydrotreatment purposes and residue conversion levels may be much less than 90%. Development work on non-catalytic, high conversion hydrogenative processes is being carried out by several organizations.

Fixed bed catalytic hydrotreatment was considered for only one of the four feedstocks, since it was anticipated that the trace metals and/or mineral content of the majority of tar sands bitumens would be prohibitively high. For case study Z1, Santa Rosa bitumen, which had the lowest reported trace metals content, was assumed. Process estimates were based on in-house as well as literature reports of catalytic hydroprocessing of residua, at conversion levels as high as these sources suggested were practicable.

A two-reactor system was employed, with the first reactor serving as a guard bed to protect the second reactor from contaminants introduced with

the feed. Table E of Appendix E presents detailed estimates of process operating conditions and yields. These data are summarized in Table 12.

Projections of catalyst life fell short of the one-year target. The production of, and quality of, the liquid products are considerably improved compared to the base case (case study B1 of Table 9). Hydrogen consumption is considerably increased compared to the other upgrader (hydrovisbreaking case study X1 of Table 10) which operates in a hydrogen atmosphere, but in a non-catalytic mode. Whether this is advantageous cannot be determined until the respective upgraders are integrated with the appropriate refining processes. In keeping with the preceding discussion, residue content of the liquid product is relatively high.

f. Naphtha refining

In all case studies, the naphtha fractions ($\sim C_5$ to 490°F boiling range for the JP-4 product slate) from either the atmospheric distillation tower or the upgrading section were hydrorefined to achieve one or more of the following: 1) reduction of heteroatom content, 2) saturation of olefinic bonds, 3) a shift in hydrogen:carbon ratio, or 4) acceptable thermal and storage stability. This is done over a fixed bed of a non-proprietary, commercial, nickel-molybdenum on alumina catalyst.

Preliminary estimates of the naphtha hydrotreater operating conditions and material balances were based on literature sources, vendor contacts, and in-house experience, coupled with estimates of feed quality generated in the preceeding evaluations (e.g., nitrogen content, sulfur content, unsaturation). In one instance (case study X6), the naphtha feed is a wider boiling cut, to allow production of JP-8 type fuel rather than the lower boiling JP-4.

Table 13 summarizes estimates of naphtha hydrotreater operating conditions and material balances. It was assumed that operation at 1,500 psig operating pressure achieved virtually complete removal of heteroatoms, and that residual sulfur, nitrogen and/or oxygen contents of the hydrotreated naphthas were in the low parts-per-million range.

The projected variations in feedstock quality are accommodated by adjustments to reactor space velocity and average catalyst bed temperature. Estimated hydrogen consumption ranges from about 550 SCF/bbl for the cleanest feed to about 1350 SCF/bbl for the sulfur-laden feedstock. Estimated catalyst life is roughly inversely proportional to the process operating conditions, i.e., the higher the feed quality, the longer its estimated catalyst life. Because the naphtha hydrotreater produces little change in product molecular weight or boiling range, estimated yields of liquid product fall in a relatively narrow band, from about 102 to 104 volume percent fresh feed.

g. Hydrocracking

To increase the yield and quality of refinery product boiling in the aviation turbine fuel range, molecular weight reduction and heteroatom removal is required of the gas oils leaving either the upgrader or the atmospheric tower. Hydrocracking is an ideal tool for this conversion and was assumed for all case studies but one (Case X5).

A two-reactor hydrocracking system was employed, with the first reactor (R-1) serving a guard-bed function to minimize deactivation of the catalyst in the second (R-2) catalyst bed. In the first bed, the heteroatoms are hydrogenatively removed, and the more active olefinic species saturated, using a non-proprietary nickel-molybdenum on alumina catalyst. Most of the hydrocracking occurs in the second reactor, over a nickel-tungsten on alumina or nickel-tungsten on silica-alumina catalyst, also non-proprietary. Any higher boiling range fraction in the R-2 effluent is recycled to R-2 for additional hydrocracking, to increase aviation fuel yield.

Estimates of operating conditions and product yields were obtained by operation of a computer model simulating hydrocracker operation. Because the feeds assumed in these case studies are unlike those for which the simulation model was constructed, model results were compared with estimates generated from published correlations. Agreement was reasonable

except for yields of the C_4 fraction, so some adjustment was made to the C_4 yields based on data from commercial operations.

Results of the hydrocracking case studies are summarized in Table 14. Operating pressures of 1700-2000 psig are judged adequate to reduce sulfur and nitrogen levels in the liquid product to the part-per-million range or less. Processing severities, i.e., catalyst bed temperatures and reactor space velocities, reflect the quality of the respective feedstocks, particularly in R-1. Estimated catalyst life is impacted accordingly, with the more severe conditions producing shorter life.

Yields of C_5-490°F hydrocrackate range from about 93 volume percent to 103 volume percent fresh feed. Yields of the C_4 fraction, at 22 to 33 volume percent, are far in excess of that needed for fuel blending to adjust front end volatility of the fuel. The composition of this fraction would dictate how it might be best utilized -- alkylation, polymerization, external sales, fuel, or hydrogen production.

h. Fluid catalytic cracking

In case study X5, the atmospheric and vacuum gas oils were fluid catalytic cracked (FCC) rather than hydrocracked. This change in process configuration produces a marked shift in product slate. Fuel products include automotive gasoline and blended heating oil as well as some aviation turbine fuel, whereas the preceding case studies concentrated exclusively on aviation fuel.

Refinery feed was Santa Maria Valley heavy crude oil. Crude fractionation produced straight run naphtha, atmospheric gas oil, and an atmospheric residue. The latter stream was upgraded by hydrovisbreaking to produce additional naphtha and gas oils. The hydrorefining of the blended hydrovisbroken plus straight run naphtha has been addressed.

FCC processing of the combined hydrovisbroken plus straight run gas oils requires that first the feed be catalytically hydrotreated to reduce heteroatom content to acceptable levels. Operating conditions and product yields were estimated for the feed pretreater assuming a nonproprietary nickel-molybdenum on alumina catalyst. These estimates are summarized in Table 15. Operating conditions are somewhat milder than those employed in the R-1 stage of a gas oil hydrocracker (e.g. Case X4 in Table 14), because the FCC catalyst is somewhat more tolerant of some of these contaminants than is the hydrocracking catalyst. As indicated in Table 15, yield of treated gas oil approached 100 volume percent, with sulfur and nitrogen removals of >90% and about 50%, respectively.

The gas oil hydrotreater effluent contains a significant (ca. 50%) proportion of light distillate in the nominal 490-650°F boiling range. This fraction is not particularly attractive feed to the FCC, as gasoline yields are low and dry gas yields are high. Therefore, gas oil pretreater effluent is distilled to prepare a >650°F fraction for feed to the FCC unit, and a low sulfur 490-650°F gas oil fraction which can be sold directly, or used as cutter stock for blending heavier fuel oils.

Table 16 presents fluid catalytic cracking process estimates for case study X5, when processing the 650°F$^+$ fraction isolated from the feed pretreater effluent (cf. Table 15). Estimated operating conditions and yield structure reflect numerous commercial installations. The catalytic gasoline, produced in excess of 50 volume percent of charge, is of acceptable octane quality without the addition of antiknock. The cycle oil is used for number two fuel oil blending, while slurry oil is effective resid fuel cutter stock. Thanks to the feed pretreatment, sulfur contents of both are very low. The coke yield of 7.9 weight percent is not a net product; it is deposited on the catalyst in the reaction zone and burned off during regeneration.

SECTION IV

PROCESS ENGINEERING ANALYSIS

1. Introduction

The objectives of this screening analysis were:

1. to prepare overall process flow schematics based on the processing technology described in Section III.

2. to integrate material balances from the several process sections for each case study.

3. to project overall plant hydrogen balances and select appropriate means for satisfying any deficits.

4. to estimate overall plant energy balances, and quantify plant fuel deficit or surplus

5. to supply capital and operating cost estimates for development of venture economic analyses.

2. Processing Schemes

Figure 4 shows the overall flow schematic for the eleven core cases (Cases B1, B2, B3, B4, X1, X2, X3, X4, Y2, Y4 and Z1). As indicated, all heavy feedstocks are conditioned by desalting and filtering to remove entrained water, silt, and other tramp materials. The bitumens receive no further pretreatment prior to upgrading, whereas the heavy crude oil passes through an atmospheric distillation tower. In the crude tower, a straight run heavy naphtha (C_4 - 490°F) cut and a middle distillate (490-650°F) fraction are removed for subsequent processing in the refining sections of the plant. The atmospheric bottoms (650°F+ fraction)

from the heavy crude are then upgraded as indicated in the core evaluation matrix of Figure 4.

The downstream refining section of the plant for most of the core studies consists of two major operations -- hydrotreating of liquids in the naphtha boiling range, and hydrocracking of the wide boiling range gas oils to reduce their distillation temperatures to those of aviation turbine fuel. Auxiliary plants are supplied for treatment of waste water and for scrubbing light refinery gases of nitrogen and sulfur compounds. The latter are extracted and converted to ammonia and to elemental sulfur for external sales. After gas scrubbing, contained butanes are separated by fractionation. Butanes in excess of those needed for front-end volatility control of the fuel products are available for external sales.

Light hydrocarbon gases from the gas plant supply two needs -- hydrogen generation by steam reforming, and refinery fuel -- with the former being given preference. Once plant hydrogen needs are met, if the remaining gas cannot meet refinery fuel demand, it is supplemented by coke or by residual fuel produced within the refinery or purchased. Purchase of cutter stock may also be required to blend residual fuel to a uniform viscosity.

The above process configuration also applies to case studies X4B, in which the effect of varying the severity of hydrovisbreaker operation was examined, and X6, in which JP-8 is produced rather than JP-4.

Figure 5 shows the overall flow schematic for case study X5, which examines the effect of substituting a fluid catalytic cracker for the gas oil hydrocracker when processing the heavy crude oil from Santa Maria Valley. This change results in a significant shift in product slate away from aviation fuel and toward a mixed fuels slate (i.e., gasoline, turbine fuel, no. 2 furnace oil or diesel fuel, and residual fuel) that more closely resembles the consumption pattern within the civilian sector.

Case X5 is also based on processing only the atmospheric bottoms through the hydrovisbreaker. The straight run naphtha is combined with hydrovisbreaker naphtha, hydrotreated, and the blend used for JP-4 product. Atmospheric straight run gas oil from crude distillation is combined with hydrovisbreaker gas oil (490-1050°F) for processing in the gas oil charge hydrotreater. This step is necessary to protect the FCC catalyst from detrimental effects of the high sulfur and nitrogen contents of the gas oil blend. The gas oil hydrotreater effluent is fractionated into a small quantity of naphtha (C_4-490°F), a middle distillate (490-650°F), and a heavy gas oil (650°F+). The naphtha is added to the JP-4 pool and the middle distillate is used to blend no. 2 furnace oil and/or diesel fuel.

FCC processing of the heavy gas oil produces light ends, catalytic gasoline, cycle oil, and slurry oil. The latter two streams serve as fuel oil blend stock or residual fuel cutter stock, respectively. The treatment of refinery light gases is as in the core cases, i.e. H_2S and NH_3 are removed and sold as elemental sulfur and ammonia. Butanes are used for fuel blending (JP-4 and gasoline) and any excess sold. Hydrogen is produced by steam reforming of the C_3 and lighter gases; excess gas is used to help meet refinery fuel needs.

Figure 6 illustrates the processing sequence for case study X4A, in which partial oxidation is used for the generation of hydrogen, rather than steam reforming of light hydrocarbons. The scheme includes atmospheric fractionation of Santa Maria Valley crude, hydrovisbreaking of the crude tower bottoms, plus naphtha hydrotreating and gas oil hydrocracking, just as in case study X4. However, in case X4A, the hydrovisbreaker bottoms, plus steam and purchased oxygen, are processed in a resid partial oxidation unit of conventional design. Effluent, mainly carbon monoxide plus hydrogen, passes to a shift reactor which increases the hydrogen content while converting carbon monoxide to carbon dioxide. Shifted gas requires carbon dioxide removal, and methanation to remove traces of carbon oxides, and yields 96% purity hydrogen for the three processing units.

C_3 and lighter gases from the gas plant are either converted to hydrogen by steam reforming, supplementing that produced by resid partial oxidation, or fired as refinery fuel.

3. Process Descriptions

a. Delayed coking

This process was selected as the base case for all four feedstocks because its performance in the upgrading of even the lowest quality feeds has been demonstrated through years of operation in hundreds of commercial units. The process configuration, for coking either the whole tar sands bitumens or the atmospheric tower bottoms of heavy crude oil, is shown in Figure 7.

During operation, the charge heater is set for 900°F outlet temperature. Fresh feed is charged to the fractionator bottom, combining with some condensed recycle material, before entering the charge heater. Vaporization with mild thermal cracking occurs as the oil reaches temperature. Within the coke drum, which is maintained at 28 psig pressure, the mixture is further cracked, and some polymerization takes place. Overhead vapors pass to the fractionation section; the coke remains in the drum. Yields of coke will vary widely, depending on feed quality and operating conditions of the coker and fractionator. In case studies B1 through B4, coke yields ranged from 17-20 weight percent of fresh feed. At least two coking drums are used, with one on a decoking cycle while the other is filling. Decoking is accomplished by cooling and purging the drum, removing the flanged heads, and cutting the coke out with a hydraulic cutting tool. Coking cycles are approximately twenty hours.

The quenched hydrocarbon vapors from the coking drum are fractionated in a conventional atmospheric tower to yield light hydrocarbons, a heavy naphtha cut (C_5-490°F) and a gas oil fraction (490-900°F). Any residual material combines with fresh feed entering the bottom of the tower and is recycled to the coker drum.

For these case studies, the coke produced is to be used internally as boiler fuel, with any excess being sold as fuel.

b. Hydrovisbreaking

The process configuration for hydrovisbreaking is illustrated in Figure 8 and is applicable to any of the three bitumen feeds or to the atmospheric bottoms feed from the heavy crude oil. As with coking, reactions occur thermally; however, the cracking that occurs at 825°F does so in a hydrogen atmosphere at 2500 psig, and coke formation is suppressed. Thus, the process may be viewed as a non-catalytic form of hydrocracking. Hydrogen utilization is enhanced by compressing and recycling portions of the high and low pressure off-gases. Recycled hydrogen combines with fresh make-up hydrogen and both join the heavy liquid feed at the charge furnace. Extent of feed conversion is determined by residence time, temperature, feed reactivity and the degree of recycle.

Within the reactor vessel, liquid and vapors are disengaged at the top. Entrained condensibles exiting the reactor in the vapor stream are condensed, collected in the high pressure separator, and flashed into the liquid stream exiting the bottom of the reactor. After heat recovery and pressure reduction, the separated liquids undergo atmospheric and vacuum distillation.

Fractions collected include 1) wet gases which are processed in the gas plant, 2) a wide boiling (C_5-490°F) naphtha which is further refined in the naphtha hydrotreater preparatory to aviation fuel blending, 3) a blend of atmospheric and vacuum gas oils (490-1000°F) which is subsequently processed in a gas oil hydrocracker, and 4) a $>$1000°F vacuum residue. Portions of the residue may be recycled, as necessary, to control conversion level of the fresh feed. The remainder is used for either refinery fuel or, in the case study X4A, for synthesis gas generation in a resid partial oxidation unit. When fired as fuel, the

resid may require blending with cutter stock to obtain the desired viscosity range.

In another special case study (X5), the wide boiling gas oil from hydrovisbreaking the >650°F fraction of Santa Maria Valley crude is hydrodesulfurized and processed in a fluid catalytic cracker to produce blended furnace oil and catalytic gasoline.

c. Asphalt Residual Treating (ART)

The upgrading of Kentucky bitumen and the long resid from Santa Maria Valley crude by the ART process were evaluated with assistance from the M. W. Kellogg Company, licensors of the Engelhard technology. Figure 9 illustrates the operation of the process, which bears a strong resemblance to a fluid catalytic cracking process. In fact, early commercial applications have taken place in small FCC units, suitably modified.

The proprietary ARTCAT™ material acts as a sorbent upon which feed contaminants such as metals, nitrogen, sulfur, and coke precursors are deposited. This occurs when the fluidized hot contact material encounters the steam-dispersed feed in the contactor or riser. Lighter components of the feed vaporize, as do thermally cracked products. With minimal catalytic activity, the circulant acts principally as a contaminant sorbent, and has little tendency to produce changes in the molecular structure of the vaporizable components. In the disengaging section of the contactor, volatile hydrocarbon components are removed and quickly quenched, to prevent further degradation. After oil quench and waste heat recovery, the fuel gases, naphtha, distillates and residual fractions are separated for subsequent downstream processing -- viz. naphtha hydrotreating and gas oil hydrocracking -- into aviation fuel and allied products.

Carbonaceous deposits sorbed onto the circulating contact material are removed by air oxidation in the regenerator vessel. Since the metals remain deposited on the sorbent, a drag stream of spent ARTCAT™ must be withdrawn, to accomplish control of the trace metals inventory. Spent sorbent is disposed.

A portion of the feedstock sulfur is removed as hydrogen sulfide in the light hydrocarbon gases produced in the reactor. Additional sulfur removal is accomplished by conversion of the sorbed materials into sulfur dioxide during coke combustion in the regenerator. Desulfurization of regenerator off-gas, from which heat is recovered by generation of steam, is required to reduce sulfur oxides released to the atmosphere.

d. Residuum hydrotreating

Bitumen from Santa Rosa tar sands was processed in a single case study (Z1) of high severity two-stage residual oil hydrotreating. Low ash and low metals content of the feedstock are required to minimize contamination of the fixed beds of catalyst. Figure 10 illustrates the process configuration.

The first reactor, which serves as a guard bed for the catalyst in the second reactor, operates at hydrogen partial pressures in excess of 2,500 psig. The liquid feed, having been mixed with a portion of the hydrogen stream prior to entering the furnace, passes over the first catalyst bed of nickel-molybdenum on alumina at 625°F and a liquid hourly space velocity of 0.5 $hr.^{-1}$ In the second reactor, liquid hourly space velocity over an extruded nickel-molybdenum on alumina catalyst at 800°F is also 0.5 $hr.^{-1}$ Intrareactor injection of hydrogen plus maintenance of high hydrogen circulation rates (6,000 SCF/bbl recycle) effect hydrogenation and hydrocracking of the bitumen while minimizing coke formation. Net hydrogen consumption of approximately 1,500 SCF/bbl. occurs across the pair of reactors, as estimated from the raw feed carbon:hydrogen ratio and the heteroatom content.

The products from the reactor pass through both high and low pressure separators, after heat exchange with cold feed. Wet gas recovered from the atmospheric fractionator, plus low pressure flash gas and high pressure gas bled from the recycle loop, are dispatched to the gas plant for scrubbing of sulfur compounds and removal of butanes. Liquid fractions from the distillation section include a naphtha cut (C_5-490°F), a wide gas oil (490-1000°F) and a residue (>1000°F).

Although of considerably higher quality than those produced in the other upgraders, the naphtha cut is still expected to require some degree of hydrorefining to permit blending of specification quality JP-4. Similarly, the gas oil cut, while improved over that produced in the coking, ART or hydrovisbreaker case studies, will require additional, albeit less severe, hydrorefining before being hydrocracked down to the JP-4 boiling range.

Vacuum tower bottoms is burned within the refinery to satisfy fuel needs. Of significantly higher quality than similar cuts produced by alternate upgraders, the firing of resid from hydrotreated bitumen would reduce investment in flue gas desulfurization capacity.

e. Naphtha hydrotreating

In each case study, naphtha produced in the upgrader is hydrotreated in a catalytic fixed bed process. For the case studies based on heavy crude oil, the feed is a blend of upgrader naphtha plus straight run naphtha from the atmospheric crude tower.

In all but one case study, the naphtha feed had a nominal tail end cut point of 490°F, for blending of JP-4 fuel. In case study X6, JP-8 fuel was produced, rather than JP-4. As a kerosene type, rather than a gasoline type fuel, JP-8 has higher initial and final boiling points than JP-4. For the JP-8 hydrotreater design, the final boiling point of the naphtha feed was shifted to 550°F, but the initial boiling point remained

the same as for JP-4. Adjustment of the front end is accomplished by fractionation of the hydrotreated product. This produces a substantial volume of clean, light naphtha, suitable for gasoline blending or aromatics production, in addition to the JP-8.

Figure 11 represents the principal flow scheme for the naphtha hydrotreaters. Feed naphtha, combined with hydrogen (recycle plus make-up) is heat exchanged with reactor effluent before entering the furnace. The quality of the feedstock dictates the severity level of the hydrotreating operation, as determined by hydrogen partial pressure, reaction temperature and contact time. The catalyst, in all studies, is a non-proprietary nickel-molybdenum on alumina extrudate.

Reactor effluent is heat exchanged and cooled before passing through high pressure and low pressure vapor-liquid separators. Light ends from the low pressure flash and the stabilizer are processed to recover sulfur and/or nitrogen in the form of hydrogen sulfide and ammonia, dry gas (C_3 and lighter) and a butane fraction. The latter is used to adjust final JP-4 blend Reid vapor pressure, with any excess being sold.

In all case studies which include a gas oil hydrocracking facility, the hydrotreated naphtha is blended with hydrocracked naphtha to make the finished aviation turbine fuel blend. In the JP-8 case, a light naphtha fraction (nominal 290°F end point) is co-produced for external sales.

f. Gas oil hydrocracking

Distillate hydrocracking was selected for converting the relatively large volumes of atmospheric and/or vacuum gas oils to finished aviation turbine fuel blending components. Major considerations influencing this choice were 1) hydrocracking of gas oils to naphthas produces high volumetric yields, e.g. >100 volume percent, and 2) hydrocracked naphthas would be expected to meet, without further processing, the stringent quality requirements of aviation turbine fuels. Both are important

because the hydrocracked naphtha generally accounts for the larger proportion of the total aviation fuel pool.

As indicated in the schematic flow diagram of Figure 12, the hydrocracker complex converts distillates from the upgraders, or from the upgraders plus atmospheric crude tower, to either JP-4 or JP-8 components. When designed for a JP-4 product slate, the nominal boiling range of the hydrocracker feed is 490-1000°F; when processing to produce a JP-8 product slate, the feed is a nominal 550-1000°F fraction.

A two-reactor configuration is employed. In the first reactor (R-1), the feedstock is hydrogenated over a non-proprietary nickel-molybdenum on alumina catalyst to convert heteroatoms and active carbon-carbon double bonds. This guard case type operation prevents poisoning the hydrocracking catalyst in the second reactor. For simplicity, the two reactors operate at the same total pressure, adjusted for inter-reactor pressure drop of 75 psi.

The second reactor (R-2) contains a commercial hydrocracking catalyst of either nickel-tungsten on alumina or nickel-tungsten on silica-alumina. In R-2, the hydrotreated gas oil from R-1 is converted to light gases and naphtha. Provisions for recycling the higher boiling portion of the R-2 effluent to the inlet of R-2, after fractionation, enable 100% conversion of the feed.

Hydrocracker severity, to meet the estimated processing requirements of the different types of feed, is achieved by:

- Pressure
  - for bitumen feeds, pressure is 1700-1775 psig
  - for heavy crude oil, pressure is 2000-2075 psig

- Space velocity

  for catalytically upgraded feeds, R-1 LHSV is 0.8 $hr.^{-1}$

  for thermally upgraded feeds, R-1 LHSV is 0.3 - 0.4 $hr.^{-1}$

- Temperature

  ranges from 710°F to 770°F in R-2, depending on estimated relative ease of hydrocracking.

Process flow is illustrated in Figure 12. Liquid feed, after heat exchange with R-2 effluent, is combined with (fresh plus recycle) hydrogen before passing through the R-1 charge furnace. Intra-stage cooling is achieved by injection of additional hydrogen, as required. Water injection into the R-1 effluent facilitates removal of potentially troublesome ammonium sulfide salts.

Hydrogen-rich gas from the first stage high pressure separator is further cooled, combined with a similar stream from the R-2 vapor/liquid separation section, and scrubbed by an amine solution to remove hydrogen sulfide, before recycling.

Liquid products from R-1, combined with additional hydrogen, pass through the charge preheater and into the second reactor, where most of the hydrocracking occurs. Intra-reactor quenching by hydrogen addition is again used as required to control catalyst bed temperatures. R-2 effluent, after heat exchange with cold feed from tankage, is separated into gas and liquid, depressured, and fractionated into wet gas, a naphtha fraction for JP-4 or JP-8 blending, and a heavier cut that is recycled to the hydrocracking reactor.

When configured for maximum JP-4 product, the side draw of the product fractionator is a nominal C_5-490°F naphtha, and the recycle stream is a >490°F gas oil. For JP-8 production, the product cut to fuel blending is a 290-550°F fraction, so the recycle stream is a slightly heavier (> 550°F) gas oil. In addition, a light naphtha side stream (C_5-290°F) is

drawn, which may be sold into the gasoline or petrochemicals markets. For the JP-8 case, a small amount of distillate fuel oil is produced, to maintain a balanced recycle stream around the hydrocracker.

Estimates of hydrogen consumption in the hydrocracking section vary widely, reflecting chemical composition of the feed. For the gas oil feed from hydrogenated Santa Rosa bitumen (case study Z1), hydrogen consumption of 1500 SCF/bbl. is estimated. At the other extreme, for the gas oil feed from delayed coking of Santa Maria Valley crude oil (case study B4), hydrogen consumption is estimated at 2700 SCF/bbl.

g. FCC feed hydrotreater

In case study X5, a blend of straight run atmospheric gas oil and wide boiling range hydrovisbroken distillate is converted to lighter fuel products by fluid catalytic cracking. Both are produced by processing the Santa Maria Valley crude. Hydrotreatment of the FCC feed is required, however, to lower the nitrogen and sulfur contents to acceptable levels. Figure 13 illustrates the hydrotreater flow scheme.

Gas oil feed is heat exchanged with reactor effluent, joined with hydrogen (fresh makeup plus recycle), and preheated to reaction temperature. Processing is at nominal conditions of 1200 psig and 680°F over a nickel-molybdenum on alumina catalyst. Reactor products, after heat exchange with incoming feed and further cooling, are processed through high and low pressure separators to achieve vapor-liquid separation.

Non-condensibles contained in the low pressure flash gas pass through fractionation to the gas plant for further clean-up. Liquid effluent, rather than being directly fed to the FCC unit, is distilled into a small volume of naphtha suitable for JP-4 blending, a clean middle distillate suitable for no. 2 fuel blending, and a heavier (> 650°F) distillate for FCC processing.

The fluid catalytic cracking unit, where the hydrotreated gas oil is converted to gasoline and middle distillate, may be of a design offered by several licensors. Inasmuch as it would be acquired under license as a completed process design package, a schematic was not developed for it.

h. Flue gas desulfurization

Refinery process heaters and boilers are fired by either refinery fuel gas, bunker fuel or coke, with priority given refinery byproduct fuels over purchased stocks. Sulfur content of the fired fuels ranges widely, reflecting both the quality of the crude feedstock and the process sequence employed. To achieve acceptable emissions levels, flue gas desulfurization is required.

The flue gas desulfurization system is also used to treat the regenerator off-gas for those cases which include the ART upgrading process. For the FCC case, however, desulfurization of regenerator off-gas is not required, since the FCC feed is a hydrotreated chargestock and sulfur content of the coke deposited on the catalyst is acceptably low.

To avoid waste disposal concerns, a combination of the Wellman-Lord regenerable SO_2 recovery system plus the Allied Chemical reduction process for manufacturing elemental sulfur is selected. Effluent gases from boilers, furnaces, and kilns are scrubbed with wash water in a venturi before entering a spray type absorber where they are contacted with aqueous sodium sulfite solution. More than 90% of the contained sulfur dioxide is absorbed, forming sodium bisulfite. The absorbed sulfur dioxide is stripped from the rich bisulfite stream in steam-heated evaporators.

The recovered gas stream contains 80-85% sulfur dioxide. Processing of the SO_2 rich gas in the Allied Chemical system reduces the SO_2 to marketable elemental sulfur. The reducing agent is a gaseous stream rich in hydrogen and carbon monoxide, produced from natural gas or other fossil fuels.

Since both units are licensed processes and sold as complete packages, no schematics have been developed.

4. Estimated Hydrogen Balance

Hydrogen is consumed during the refining of upgrader effluents and in some case studies (the X and Z series) hydrogen is utilized in the upgrader itself. Estimates of hydrogen consumption for individual units comprising each case study have been presented along with the material balances in Section III. In this section, a balance is struck between these hydrogen demand estimates and potential hydrogen sources.

Light gases produced and recovered during upgrading and refining are the principal source of plant hydrogen. These streams, after processing in the gas plant to remove butanes, hydrogen sulfide and ammonia, may include a significant amount of hydrogen. In addition, the light hydrocarbons - methane through propane - can be converted to hydrogen-rich gas via the steam reforming reaction.

Two options were considered for processing the gas plant light hydrocarbons:

- process the total gas stream through steam reforming, shift reactor, acid gas removal and methanation. The hydrogen initially contained in the stream is taken into account in determining the total hydrogen generation potential of the gases. Any light gas in excess of that required to meet hydrogen consumption requirements is allocated to the refinery fuel system.

- treat the gas plant light hydrocarbon gas stream by molecular sieve purification to capture the contained hydrogen. Satisfy any further hydrogen deficiencies by processing the remaining methane through propane fraction via steam reforming, shift

reactor, CO_2 removal and methanation. Again, excess light hydrocarbons over hydrogen generation requirements are utilized as refinery fuel.

The latter approach results in a smaller hydrogen plant, and in less hydrogen being burned as fuel. Balanced against this is the cost of installing and operating the molecular sieve hydrogen purification system. In this preliminary assessment, it was not practical to compare the two approaches, for each case study. Cursory evaluation of the respective requirements of each option indicated steam reforming of the whole gas stream to have an economic advantage. This approach was assumed for all case studies.

Where the C_3-and-lighter stream from the gas plant was inadequate to generate the required hydrogen, a portion of the C_4 fraction was diverted from external sales to provide the required feed to the steam reformer.

As a supplement to case study X4, utilization of the residual fraction from hydrovisbreaking was evaluated for the production of hydrogen. In case study X4A, the hydrovisbroken resid, rather than being blended into a boiler fuel, is processed in a Texaco partial oxidation gasifier. The reaction with 97% purity oxygen produces a low nitrogen content gas containing hydrogen, carbon monoxide, carbon dioxide, steam and methane. Approximate gasifier operating conditions and yield are:

Feed	>1000°F resid
Feed density, °API	-5.7
Charge rate, BPSD	4466
Oxygen charge, TPD	865
Pressure, psig	1200
Temperature, °F	2500-2600
Product gas, MMSCFD	72.1
Contained H_2 (96% purity), MMSCFD	65.0

Following gas quench to recover sensible heat, processing of the gasifier effluent consists of high temperature and low temperature shift reactions, acid gas removal via the Selexol process, and final methanation of the hydrogen gas to remove residual amounts of carbon oxides. The carbon dioxide rich acid gas recovered in the Selexol unit is treated in a Stretford unit for recovery of elemental sulfur for external sales. Resid gasification supplies only a portion of the plant's total hydrogen requirements. The remainder is made up by steam reforming a portion of the gas plant light hydrocarbons. To gain efficiency, the crude gas streams from the gasifier and reformer are combined, after Selexol treatment, and a single gas stream processed through shift, carbon dioxide removal, and methanation.

Table 17 summarizes the gross hydrogen consumptions estimated for each case study, in thousands of standard cubic feet per day for each of the principal processing plants. Total hydrogen consumptions, in standard cubic feet per barrel of fresh feed are also tabulated. In general, overall hydrogen consumption is greater in those cases which employ hydrogen in the upgrading step. Feedstock effects, within any group of case studies employing a common processing sequence, are relatively small, and not directionally consistent.

Table 17 also indicates how these hydrogen demands are satisfied. In most cases, the supply of C_3 and lighter from the gas plant is more than adequate, although in case study Z1, it was necessary to include a small amount of the C_4 fraction in the feed to the steam reformers. The dry gas stream from the gas plant contains both hydrogen and light hydrocarbons. In Table 17, the respective volumes of contained hydrogen, as well as hydrogen generated by steam reforming, are indicated. Also included in the table are estimates of the proportion of the total C_3 and lighter stream which is committed to hydrogen. The remainder is used for refinery fuel.

5. Refinery Fuel Balance

The principal refinery fuel consumers are fired heaters which bring feed streams up to operating temperature (e.g. crude towers, catalytic reactors) plus boilers which generate steam for either low-level heating, process use, or as a prime mover (pumps, turbines, compressors). For either application, the estimated fuel requirements were net, i.e., after taking into account heat recovered by exchange with exiting streams or steam generated within process units (e.g. catalyst regenerators, partial oxidation units).

Refinery operations produce several streams with potential for use as fuel. These include that portion of the light hydrocarbon (i.e. C_3 and lighter) stream exiting the gas plant which is in excess of that required for the generation of hydrogen. In view of its easier handling, gaseous fuel is given preference for use in fired heaters. Process schemes which utilize carbon rejection techniques for upgrading heavy feed may produce coke. In those case studies which use either the ART process or fluid catalytic cracking, the coke is combusted within the process to provide process heat. Any excess is available as exported steam. By contrast, the delayed coker produces much coke, which use is limited to boiler firing.

Residual material from the upgraders can fuel either refinery heaters or steam boilers. The quality of this residual stream varies with the upgrader, but it is generally lower than that of commercial bunker fuel. Therefore, the locally produced residual fuel is blended with purchased cutter stock, if none is available internally, to achieve a bunker fuel blend viscosity of 150 Saybolt Furol Seconds (SFS) at 122°F. The blend ratio of cutter stock to residual fuel to obtain this viscosity level was based on projections of the residual fuel characteristics, for each process scheme.

If the amount of internally produced residual fuel or coke exceeded that required of either form, the excess became available for external sales. Additional cutter stock was not purchased for the exported residual fuel, but the effect of its higher viscosity was accommodated by discounting the resid

to its blend-in value to produce acceptable bunker fuel. When internally generated fuel was not sufficient to meet fuel demand, purchased bunker of the indicated commercial viscosity level made up the deficiency.

Table 18 summarizes the accounting for the refinery fuel balance for each of the case studies. In the series of delayed coking case studies (B series) no residual fuel was produced internally, while coke was restricted to use in boilers. Accordingly, purchases of bunker fuel were required for process heat requirements. Only a fraction of the coke produced was required for raising steam, so a considerable portion of the coke (about 85% for the bitumen feeds, and about 50% for the California crude) was available for external sales.

For the hydrovisbreaking case studies (X series), no coke was produced, while nearly all of the gas plant C_3 & lighter stream was consumed in producing hydrogen. To meet process heat and fired boiler needs, vacuum resid from the hydrovisbreaker was blended with purchased cutter stock and burned. In most cases, more than enough resid was produced and the excess sold.

Gasification of resid (compare case X4A with case X4) to produce hydrogen freed up a considerable quantity of C_3 and lighter, which otherwise would have been used to make hydrogen. The gas was, therefore, allocated to heater firing, while boiler needs were met with purchased bunker fuel. The net effect of the addition of the gasification step was to shift fuel purchases from cutter stock to the somewhat cheaper bunker fuel.

With fluid catalytic cracking of distillate rather than catalytic hydrocracking (compare case X5 with case X4), the amount of hydrogen required for refining was significantly reduced. At the same time, the catalytic cracking process generated substantially more light gases, which were available for generation of hydrogen. The sum of these effects was a considerable excess of gas plant light ends over that required for hydrogen manufacture. This quantity was sufficient to satisfy some 95% of the fired heater fuel requirements. The remaining heater and steam boiler fuel requirements were met by blending a portion of the available resid with either FCC slurry oil or with No. 2 burner oil. The remaining resid was available for external sales.

For the two case studies utilizing the ART upgrading process, the resid produced in the upgrader was blended with purchased cutter stock and used to balance out fuel requirements in the refining areas and for raising steam. Because the process utilizes the coke laid down on the circulating contact material, the incremental fuel needs were modest. As a result, a considerable proportion (60-90%) of the resid produced was allocated to external sales.

In the residual hydrotreating study (case Z1), the residual fuel produced in the upgrader constituted acceptable bunker fuel without blending with cutter stock. With no refinery fuel gas in excess of hydrogen generation needs, all fuel requirements were met by firing this bunker. This consumed about 70% of the resid, so the remaining 30% was available for sales.

6. Refining Material Balances and Thermal Efficiencies

Integration of the individual process unit yields, adjusted for hydrogen production and refinery fuel allocations, produced estimated overall refinery material balances. Application of appropriate energy content factors allowed calculation of an overall refinery thermal efficiency. These results are summarized in Table 19 through 25, for each of the four feedstocks under consideration.

Table 19 summarizes the refinery yield structure, process thermal efficiency and JP-4 aviation fuel yield when processing bitumen from the Santa Rosa tar sand deposits of New Mexico. The case studies encompass three upgrading routes - delayed coking (case B1), hydrovisbreaking (case X1), and fixed-bed residuum hydrotreating (case Z1). For all three case studies, downstream refining consists of hydrotreating naphtha fractions, plus recycle hydrocracking of distillate fractions which boil above approximately 490°F.

Refinery purchases, in addition to the 7,500 BPSD of raw bitumen, include either cutter stock or bunker fuel to meet refinery fuel requirements. The principal refinery product is JP-4, of course, with saleable by-products consisting of a C_4 fraction, elemental sulfur, liquid ammonia, and any excess low grade fuels (resid, coke) not consumed internally.

The volumetric yield of JP-4, based on purchased crude, ranges from 80% to nearly 94%. Relative rankings are hydrovisbreaking > residuum hydrotreating > delayed coking. The spread in refinery thermal efficiency, which incorporates all purchases and products, is much narrower, with the processes ranking hydrovisbreaking ≈ residuum hydrotreating > delayed coking.

Yields of by-product sulfur and ammonia are somewhat lower for the delayed coking case because there is less hydrogenative processing. The balance of sulfur and nitrogen is contained in the coke.

Table 20 summarizes estimated overall refinery yield structures, process thermal efficiencies and aviation fuel yields for processing bitumen from Kentucky tar sands. The three case studies evaluated delayed coking (case B2), hydrovisbreaking (case X2) and the ART process (case Y2) for upgrading. Each upgrader was combined with naphtha hydrotreating and distillate hydrocracking to produce principally JP-4 turbine fuel.

For the Kentucky bitumen, yields of JP-4 based on the volume of crude purchased ranged from about 67 volume percent to about 95 volume percent. Relative rankings of the upgrading processes are hydrovisbreaking > delayed coking > ART. The large spread in JP-4 yields reflects the relatively mild processing achieved by the ART treatment, whereby a considerable proportion of >1000°F remains after processing, eventually to be found in the resid fuel pool. Process thermal efficiencies are closely grouped at 82 to 88%. Rankings are delayed coking ≈ hydrovisbreaking > ART.

The effect of shifting product slate from a naphtha type (JP-4) fuel to a kerosene type (JP-8) was evaluated for a refinery processing Kentucky bitumen. The processing sequence included upgrading the bitumen by hydrovisbreaking followed by naphtha hydrotreating and gas oil hydrocracking. The comparison between case study X-2 (the JP-4 case) and case study X-6 (the JP-8 case) is summarized in Table 21.

The impact on aviation turbine fuel yield is dramatic, with the JP-8 configuration supplying only about 2/3 the volume of fuel as when JP-4 was produced. Most of the slack is the light naphtha fraction that was too low in boiling range for inclusion in JP-8. This cut would be available for external sales, for example as a gasoline blending component. Overall refinery efficiencies are nearly alike but with a slight edge in favor of the JP-4 configuration.

Refinery yields, process thermal efficiencies, and JP-4 yields for processing a bitumen from Utah tar sands are summarized in Table 22 for two upgrading approaches: delayed coking (case B3) and hydrovisbreaking (case X3). Volumetric yield of JP-4, based on purchased crude, was slightly better than 100% for hydrovisbreaking compared to 84% for delayed coking. Overall thermal efficiencies were nearly a standoff, however, at about 85%. As in previous comparisons, the scheme utilizing delayed coking produced somewhat less sulfur and ammonia byproducts with the fuel-grade coke accounting for the difference.

Results of processing Santa Maria Valley crude, a heavy oil from California, are summarized in Table 23 for three upgrader types: delayed coking (case B4), hydrovisbreaking (case X4) and the ART process (case Y4). In contrast to the bitumen feedstocks, the crude oil included a significant proportion of straight run distillate ($< 650°F$) which bypassed upgrading. Straight run naphtha and gas oil were combined with similar streams exiting the upgraders, for subsequent refining (again, via naphtha hydrotreating and gas oil recycle hydrocracking) to finished products.

Yields of JP-4 fuel, based on purchased crude, ranged from 78 to 92 volume percent, with the relative standings of the upgraders being hydrovisbreaking $>$ delayed coking $\gg$ ART. As with the Kentucky bitumen, the ART process left more of the feed in the $>1000°F$ boiling range than the other two approaches, and the volume of resid to fuel sales swelled accordingly. The three process schemes provided nearly comparable thermal efficiencies, ranging from 79 to 83%, and ranked as delayed coking $>$ ART $\approx$ hydrovisbreaking. Process efficiencies were slightly lower than in the bitumen comparisons, possibly reflecting the additional step of crude distillation.

Several processing alternatives were examined for the conversion of the heavy California crude oil, all employing hydrovisbreaking as the upgrading step. These alternatives, and the respective case studies for comparison, are discussed below, with the refinery balances summarized in Table 24.

Fluid catalytic cracking (case study X5) of the combined straight run gas oil plus hydrovisbroken gas oil was compared to hydrocracking (case study X4) of the same blend. A remarkable shift in refinery product distribution occurred, with the FCC case supplying a product slate much more representative of what is used by the general public. For the FCC configuration, production of JP-4 turbine fuel and butanes was less than half those obtained by hydrocracking, while the broader spectrum of fuels included significant yields of gasoline, number two burner fuel and residual fuel. As expected, the approach employing FCC was considerably more energy efficient, at roughly 88% versus 79% for that utilizing hydrocracking.

In case study X4A, hydrogen was generated by resid partial oxidation, compared to steam reforming of C_3 and lighter hydrocarbons as in case study X4. The substitution results in virtually no changes in product distribution, in yield of aviation fuel, or even in overall process thermal efficiency. The only change of consequence was a shift in the quality of purchased supplemental liquid fuel, from about 3500 BPSD of cutter stock in case X4 to about 3000 BPSD of bunker fuel for the partial oxidation alternative.

The effect of hydrovisbreaker operating severity was addressed via case study X4B, in which nominal residuum conversion was 90%, compared to the 85% for case study X4. The shift produced a slightly greater yield of JP-4 and butane, while the modest volume of resid for sale disappeared. Purchase of supplemental fuel increased for the higher conversion case, although overall thermal efficiency was not affected. Although the yield of JP-4, based on purchased crude is increased about 2-1/2% (94.7 versus 92.2 volume percent), the yield based on total volume purchased (crude plus fuel supplement) was largely unchanged.

7. Utilities

For each case study, estimated utility requirements for individual operating areas have been summed to arrive at overall refinery utility demands. These requirements are summarized in Table 25. As indicated in the discussion of refinery fuel balances, the fired heater requirements listed in column 1 are satisfied, where feasible, by internally generated gaseous and/or residual fuels. The steam boiler firing requirements are met by any additional fuel surplus or by burning delayed coke. Any remaining unmet fuel requirements are satisfied by purchased bunker fuel.

Power requirements shown are for the entire refinery complex operating at capacity. Power is purchased.

SECTION V

ECONOMIC ANALYSIS

1. Introduction

This section presents estimates of plant capital investment, operating costs, and the results of venture analyses for the fifteen processing case studies detailed in the preceding sections. Economic bases for the analysis are also presented.

For these studies, project scope encompassed only the processing of the bitumen or heavy crude feedstock, delivered to the refinery gate at the specified price. Extraction of the bitumen or crude oil resource from the deposit was not included. Variations in the technology of resource extraction, which could drastically alter the properties of the feedstock and significantly impact ease and/or cost of processing, were not assessed.

Treating the resource extraction step and the processing step as independent operations precludes any potential advantages to be gained in an integrated operation. This is likely a minor consideration for the crude oil refinery, but it could be significant for the much smaller bitumen refinery, or where intricate extraction methods are employed. Given the poor transport properties of bitumen, and the considerable energy and technology input required to separate bitumen from some sands, an integrated operation might demonstrate substantial benefits over the nonintegrated case.

2. Economic Bases

The bases used in performing the economic analyses of the various case studies were established during correspondence between the U. S. Air Force technical monitor and the contractor program manager. They are presented in Table 26.

Plant capacity was 7,500 BPSD for the bitumen refineries and 50,000 BPSD for the heavy crude oil refinery. Although the feedstocks under study originated in four geographically separate locales, refinery location was defined as Salt Lake City, Utah. Reflecting the smaller size and potentially more difficult processing task for bitumen feeds, plant offsites were 80% of battery limits (excluding tankage); for the heavy oil refinery, offsites were 45% of battery limits (less tankage).

Plant capital investment was expressed in 3rd quarter 1983 U. S. dollars, with 100% equity financing. A three-year plant construction period was assumed for all cases, with construction starting January 1, 1984. Plant operations thus begin on January 1, 1987, lasting through December 31, 1999. During the first year, the plant operates at 50% of capacity, increasing to a 90% on-stream factor after the start-up year. An investment tax credit of 10% was taken during the first year of operation.

All feedstocks cost $25/barrel as did bunker fuel oil. When the refineries sold surplus residuum, it was priced only at the value obtained when blending with $35.50 per barrel cutter stock to give a $25/barrel residual fuel oil of commercial quality.

The economic equation was solved for the plant gate price of all clean liquid transportation fuels (i.e. gasoline, aviation turbine fuel or number two diesel fuel) combined, to obtain the indicated 15% discounted cash flow rate of return. For these preliminary estimates, all clean liquid fuels were priced at equal value, although actual market prices for these products could include a spread of 5% or more.

For working capital purposes, product inventory was valued not at the solved-for product price, but at fixed levels of $65 per barrel for bitumen refinery case studies or $45 per barrel for heavy oil cases.

3. Determination of Fuel Costs

Cost elements that determine projected fuel selling price are total capital investment and annual plant operating costs. These are discussed in the following subsections.

a. Plant capital

For each case study, capital costs were estimated for the major operating units of the refineries. These estimates consisted of curve-type estimates, based either on published information, previous vendor quotes, or information developed in-house. The capital equipment cost data were updated to reflect third quarter 1983 construction costs and adjusted for construction in the Salt Lake City, Utah location. Table F of Appendix F shows the breakdown of installed costs for the individual process operating units comprising the battery limits capital for each case study.

Offsite facilities were determined as a percentage of the battery limits. Thus, boilers, cooling towers, stacks, flares, fire and pollution control facilities, sidings, and the like were not separately estimated.

The capital costs for plant tankage for both feed and products were estimated in accord with the criteria listed in Table 26. All tanks were of carbon steel, and consisted of API cone roof type for all liquids, and spherical types for butane.

Working capital, or recoverable money invested to get the refinery started into production, is represented by inventories of feedstocks and finished products. The bases for these estimates, including the borrowing cost, are included in Table 26. In all cases, a fourteen-day inventory of feedstock and a seven-day inventory of products were assumed.

b. Operating Costs

Refineries were assumed to have a 50% on-stream factor for the first year, and a 90% on-stream factor in subsequent years. Plant start-up contributed an

additional one-time cost of ten percent of fixed capital (i.e., battery limits plus tankage). During the start-up year, feedstock and utilities costs reflected the 50% on-stream factor, although labor-related costs are at full load.

The principal operating cost item was the purchase of feedstock, delivered at $25 per barrel for all cases. Utilities costs included purchased power, water for both cooling and boiler feed, and the incremental liquid fuels required for boiler firing (No. 6 bunker fuel at $25 per barrel) or for residual fuel blending (No. 2 cutter stock at $35.50 per barrel).

Other operating cost factors are as defined in Table 26.

c. Product cost estimates

The cost parameters described in the preceding sections were input to the corporate venture analysis economic model, to determine the plant gate price of the fuels required to give a discounted cash flow rate of return of 15%. The plant operated for 13 years, and had zero salvage value at the end of this period. For tax purposes, a five-year accelerated cost recovery system applies under current tax regulations. Combined federal and state taxes were assumed to total 50% of the profit before taxes. All clean liquid transportation fuels (i.e., naphtha, gasoline, aviation fuel and no. 2 distillate fuel) were assigned a common product value. Results of the venture analyses are summarized in Tables 27 through 32. Case studies are grouped according to feedstock source to facilitate comparison.

Table 27 presents projected costs for converting Santa Rosa (New Mexico) bitumen to aviation fuel by three upgrading approaches, viz., delayed coking (case B1), hydrovisbreaking (case X1), and fixed bed residuum hydrotreating (case Z1). Refining to finished products, in all cases, consisted of naphtha hydrotreating plus distillate hydrocracking.

Total capital requirements ranged from about $256 million for the delayed coking scheme to about $309 million for the residuum hydrotreater. The hydrovisbreaking case required, at about $272 million, about six percent more capital than the delayed coking case. Annual operating costs for the plants, when operating at capacity, ranged from a low of $74 million for the delayed coking case to a high of $80 million for the hydrovisbreaking case, with the residuum hydrotreater intermediate between the other two.

Projected fuel costs, shown in both dollars per barrel and cents per gallon, were lowest for the hydrovisbreaking case, intermediate for the delayed coking case, and highest for the resid hydrotreater case. At $70.5/bbl and $76.6/bbl, the latter two cases yielded fuel costs which were about 8% and 17% higher, respectively, than the $65.5/bbl of the hydrovisbreaker.

Table 28 presents projected costs for processing Kensyntar (Kentucky) bitumen by three upgrading approaches, viz., delayed coking (case B2), hydrovisbreaking (case X2), and the ART process (case Z2). The refining processes included naphtha hydrotreating and distillate hydrocracking to produce finished aviation turbine fuel.

Total capital requirements were lowest for the ART case at $228 million, slightly higher for the delayed coking scheme at about $239 million, and highest for the hydrovisbreaking approach at $266 million. Estimated annual operating costs, after the start-up year, were approximately a stand-off for the delayed coking and ART cases, at about $76 million. At $80 million, annual operating costs for the hydrovisbreaking case were about 5% higher than the other two.

The projected costs of fuel products to achieve a 15% discounted cash flow rate of return were $63.1/bbl for the delayed coking case, $63.6/bbl for hydrovisbreaking, and $79.7/bbl for the ART approach. Thus, the fuel costs in the latter two cases were about 1% and 26% higher, respectively, than that projected for the delayed coking case.

Table 29 compares processing Kentucky bitumen into JP-8 type fuel (case X6) with that for JP-4 type fuel (case X2), when using the hydrovisbreaking process for upgrading. Total capital requirements for the two cases were essentially the same at $266 million. At about $80 million, annual operating costs were some 1% higher for the JP-4 processing sequence. However, estimated manufacturing cost for the JP-8, at $66/bbl, was about 4% higher than for producing JP-4. This comparison assumed that two different grass roots refineries were constructed to satisfy the designated product slates. It should not be construed that these same differentials apply if a refinery designed for one product slate was adjusted to meet the demands of the other product slate.

Two upgrading alternatives were evaluated for the processing of Utah bitumen into JP-4 fuel. These were delayed coking (case B3) and hydrovisbreaking (case X3). For both cases, the refining section of the refinery consisted of naphtha hydrotreating and distillate hydrocracking. Results of the economic analysis are presented in Table 30.

Total capital requirement for the hydrovisbreaking case was $241 million, about four percent higher than the $232 million required for the delayed coking scheme. Annual operating costs were also higher for the hydrovisbreaking case, at $80 million, versus $75 million for the system employing delayed coking.

Projected fuel manufacturing cost was $57/bbl when using the hydrovisbreaking process, compared to $64/bbl for delayed coking, a difference of about 12 percent.

Studies of the processing of the California heavy crude oil are summarized in Table 31. Upgrading by delayed coking (case B4) is compared with upgrading by hydrovisbreaking (case X4) and by the ART process (case Y4). Total capital requirements for the three cases were nearly the same at about $760 million. The highest, hydrovisbreaking, and the lowest, ART, differ by only about 1%. Annual operating costs were similarly

close. At $506 million, those for hydrovisbreaking were only about 2.5% greater than for the lowest, which was delayed coking.

Estimated fuel costs for the hydrovisbreaking and coking approaches were comparable, at $44.5/bbl. Fuel cost via the ART technique was projected to be about 10 percent higher, at $49/bbl.

Table 32 compares the effects of several processing alternatives on the estimated costs for converting California heavy crude oil to JP-4. The atmospheric tower bottoms cut from the crude was upgraded by hydrovisbreaking. Also common to all four case studies was the refining of naphtha by hydrotreating.

Replacement of the distillate hydrocracker (case X4) with the FCC (case X5) unit reduced capital requirement by 5%, from about $766 million to $728 million. The reduction was not as great as might have been anticipated by the elimination of a hydroprocessing facility. The reason for this is that a sizeable hydrotreater is still required to reduce FCC feed contaminants which would cause excessive deactivation of the catalyst. Annual operating costs for the FCC case were $450 million, reduced about 11% from the reference case. In spite of the cost savings, however, the projected fuel costs were virtually a standoff, at $44.5/bbl for case X4 and $44.0/bbl for case X5.

Substitution of a resid partial oxidation unit for the light hydrocarbon steam reformers (case X4A vs. X4) to generate process hydrogen resulted in a 9% increase in total capital, to $788 million, while annual operating costs were marginally reduced (<3%) to $492 million. The impact on projected fuel cost was minimal, however, at $44.8/bbl for case X4A and $44.5/bbl for case X4.

A scheme based on operation of the hydrovisbreaker at higher severity (case X4B vs. X4) required a slightly increased capital requirement -- up about 2.5 percent to $785 million -- and a slightly higher annual cost to operate. Projected fuel costs were only marginally reduced, however, from $44.5/bbl to $44.2/bbl.

4. Comparison of Upgrading Alternatives

To facilitate evaluation of the four different upgrading processes reviewed in the preceding discussions, key data have been extracted from the series of case studies and compared in the accompanying bar charts. For each feedstock, the comparison represents variations only in the upgrading step. All others, such as crude fractionation, refining processes and auxiliaries, have been kept constant. The parameters compared are discussed below:

Fuel yield - is the estimated volumetric yield of JP-4, as a percent of refinery feed. In some case studies, the refinery required significant purchases of cutter stock or bunker fuel in addition to crude. Therefore, the volumetric yield was shown both as volume percent of total liquids supplied (dashed bar) and as volume percent of refinery fresh feed (solid bar). Where only one bar is shown, no supplemental fuel or cutter was purchased.

B-O-B yield - represents the yield of bottom-of-the-barrel type products produced for external sales. For the delayed coking case studies, the bars represent weight percent of feed. When residual fuel is produced, the bars represent volume percent. For the California heavy crude oil, two levels are shown. The lower bar represents the yield based on whole crude; the upper bar represents the yield based on the atmospheric resid fraction (i.e. $> 650°F$) of the crude that is supplied to the upgrader. The yields of residual fuel shown are net, as produced. The figures do not include the cutter stock needed to blend the resid fuel to a marketable viscosity. The B-O-B bar charts include an indicator of the limiting ten percent maximum B-O-B yield defined in the contract statement of work.

Efficiency - expresses the overall refinery thermal efficiency, taking into account all streams in and out of the refinery, including purchased fuels, utilities, and product sales. The efficiency bar charts include an indicator of the limiting seventy percent minimum which was defined in the contract statement of work.

Capital - indicates the capital investment in millions of dollars estimated for each case study. The solid bar represents the total capital requirement, consisting of fixed capital (below the dashed bar) and working capital (above the dashed bar).

Fuel cost - expresses the projected fuel cost in dollars per barrel over the life of the project necessary to obtain a 15% discounted cash flow rate of return on plant investment.

Figure 14 summarizes the three case studies made assuming bitumen from New Mexico being processed. The upgrading processes being compared are delayed coking (coded "DLC" in Figure 14), hydrovisbreaking ("HVB") and fixed bed residuum hydrotreating ("RHT"). In terms of aviation fuel yield, hydrovisbreaking offered a clear advantage over the other two routes, with the resid hydrotreating intermediate and delayed coking ranking third. In all cases, however, yields were relatively attractive, exceeding about 80 volume percent. The same relative ranking applied when looking at yields of bottom-of-the-barrel products, i.e., hydrovisbreaking produced the least, with residuum hydrotreating intermediate, while delayed coking produced the most. In the last instance, coke yield was about two times the target of ten percent.

All three case studies produced estimated refinery thermal efficiencies well above the target seventy percent. The delayed coking route appeared to offer a slight efficiency advantage over the other two, which were comparable.

The spread in total capital across the three cases was substantial, at about 20 %. The delayed coking route required the least, followed in turn by the hydrovisbreaking approach and the resid hydrotreating case. Variations in working capital were nominal. The major differences were in the increased fixed capital associated with hydrogenative processing. As indicated, projected fuel costs were lowest for hydrovisbreaking, intermediate for delayed coking, and highest for residuum hydrotreating.

Figure 15 summarizes the three case studies for processing bitumen from Kentucky. The three upgrading processes are delayed coking ("DLC"), hydrovisbreaking ("HVB"), and Asphalt Residual Treating ("ART").

The bar chart illustrating fuel yield indicates a relatively wide spread among the three. Hydrovisbreaking showed a slight edge over coking, while both yielded substantially more JP-4 than the ART approach. The B-O-B yields were consistent with the JP-4 yields, with the hydrovisbreaking scheme producing very much less than either coking or ART processing. Coke yield was somewhat higher than the B-O-B target of ten percent, whereas the ART process route produced better than twice the target maximum of residual fuel.

Again, all three process schemes readily exceeded the minimum overall thermal efficiency target of seventy percent. In order of decreasing efficiency, they ranked: delayed coking > hydrovisbreaking > ART.

The impact of hydrogenative upgrading is evident in the comparison of total capital requirements. Total capital was highest for the hydrovisbreaking route, intermediate for the delayed coking, and lowest for the ART, with that for hydrovisbreaking about 16 % higher than that for ART.

A very substantial variation in projected fuel costs was obtained, with that for ART being well above the other two, which were at a standoff. In

the main, the high fuel cost for ART processing resulted from the high proportion of resid to clean fuel in the product slate. Since the market value of the resid was fixed, that portion of capital to be recovered by floating the value of the clean fuels was spread over a much smaller base. This accounted for the apparent anomaly that the ART process, with lowest capital and lowest annual operating costs, yielded the highest fuel cost.

Figure 16 displays the important parameters generated for processing bitumen from Utah. The two case studies compare delayed coking ("DLC") with hydrovisbreaking ("HVB"). The yield pattern highly favors hydrovisbreaking, with a projected JP-4 yield exceeding 100 volume percent of fresh feed. The yield from the coking scheme was a very respectable 80+ %. The B-O-B yields were consistent with the fuel yields, with minimal low grade products produced by hydrovisbreaking. The coke yield was somewhat greater than the maximum goal of ten percent. Both process routes showed overall refinery thermal efficiency well above the seventy percent minimum target, with delayed coking gaining a slight edge over hydrovisbreaking.

In total capital requirements, delayed coking had a slight edge over the more capital intensive hydrovisbreaking. By virtue of its much higher yield of JP-4, the hydrovisbreaking route resulted in a substantially lower projected fuel cost than for the delayed coking scheme.

Results for the processing of Santa Maria Valley heavy crude oil are summarized in Figure 17. These case studies are distinguished from the three preceding sets by 1) nominal refinery size was 50,000 BPSD versus 7,500 BPSD for the bitumens, and 2) the whole crude was fed to an atmospheric crude tower for topping, and only the long residuum (> 650°F) fraction was supplied to the upgraders. Upgrading processes compared were delayed coking ("DLC"), hydrovisbreaking ("HVB"), and Asphalt Residual Treating ("ART").

Yields of JP-4 were nearly comparable for coking and hydrovisbreaking, but substantially lower for ART. The yield of B-O-B products was nil for hydrovisbreaking, and approximately at the target level of ten percent for coking, when calculated on feed to the coker. On the same basis, resid yield from the ART process was about 1-1/2 times the target B-O-B yield. All three process schemes produced overall thermal efficiencies in the neighborhood of 80 %, with a slight edge to the coking alternative.

Total capital requirements for the three alternatives were surprisingly close (note the change in scale from the three preceding bar charts), with only about a one percent spread between the lowest and highest totals.

Projected fuel costs showed a moderate disadvantage for the ART case study, while the coking and hydrovisbreaking approaches produced comparable projections. As with the Kentucky bitumen studies, the principal reason for the higher fuel costs for the ART case is the reduced yield of clean fuels over which costs are spread.

The impact of refinery size on projected fuel manufacturing costs is readily apparent in these studies. For the eight core cases in which a bitumen was being processed through a 7,500 BPSD facility, product costs ranged from a low of $57.4 per barrel to a high of $79.7 per barrel of fuel. By contrast, for the three core cases in which the California heavy crude was processed at a 50,000 BPD rate, projected fuel costs ranged from a low of $44.5 per barrel to a high of $49.0 per barrel. Since refinery operating costs per unit of throughput capacity fluctuate only narrowly, this cost difference is almost exclusively the result of the higher capital investment per unit capacity required for the smaller bitumen refineries.

The relative standings of the four upgrading approaches, based on the five key determinants just compared, have been estimated. The estimating was necessary because the study did not include all sixteen core studies that could have been made (four upgraders, four feeds). The results were as follows:

Fuel yield — Hydrovisbreaking provided the highest estimated yield in all four series. Ranking of the other three upgraders, in terms of decreasing fuel yield, was: residual hydrotreating > delayed coking > ART.

B-O-B yield — Hydrovisbreaking gave the lowest estimated yield in all four series. Ranking of the other three processes was: residual hydrotreating < delayed coking < ART. The limiting yield target of 10% maximum would appear to rule out both delayed coking and the ART process.

Thermal efficiency — Delayed coking gave the highest overall refinery thermal efficiency in all four series. The other three upgraders are estimated to provide approximately equivalent thermal efficiencies. All four upgrading approaches appeared readily capable of achieving the target 70% minimum.

Capital costs — The ART process gave lowest total capital in one of two series and was comparable to delayed coking in the second. Delayed coking gave lowest capital in two of four series and tied the ART for lowest in a third series. Standings were assigned as follows, in order of increased capital requirements: ART < delayed coking < hydrovisbreaking < residual hydrotreating.

Fuel cost — Hydrovisbreaking gave the lowest cost in two of four series, was comparable to delayed coking in a third and slightly higher than coking in a fourth. Standings were assigned as follows, in order of increasing costs: hydrovisbreaking < delayed coking < residual hydrotreating < ART.

To summarize, for a refinery configuration selected to emphasize JP-4 production, upgrading by hydrovisbreaking offers clear advantages over the other three upgrading methods. These advantages include higher estimated JP-4 yields and, conversely, lower yields of bottom-of-the-barrel products. As a result, projected fuel costs are lower. There is a price to be paid for these benefits, however, and it appears as a somewhat reduced thermal efficiency, and a somewhat elevated capital investment.

SECTION VI

CONCLUSIONS

1. About 33 billion barrels of heavy crude oil are known within major U.S. reservoirs. Two thirds of this resource are in California, with lesser amounts in Texas, Alaska and Arkansas. The estimated recovery potential is between 5 and 20 billion barrels, depending on the technology and economics prevailing. Current U.S. heavy crude production is about 0.22 billion barrels annually.

2. Domestic tar sands deposits are numerous and scattered, but not extensively characterized. The major deposits, both known and speculative, may contain between 22 and 52 billion barrels of bitumen. Utah contains about 60 percent of the known resource; Texas, California and Kentucky also contain significant deposits. If only 10 percent of the resource were recoverable, domestic bitumen reserves would be some 5 billion barrels.

3. High severity processing is required to convert heavy crude oils or bitumens into transportation fuels. The major structural changes required are:

   - reduce molecular weight to obtain lower boiling range
   - increase hydrogen:carbon ratio
   - reduce non-hydrocarbon or heteroatom content (sulfur, nitrogen)
   - lower contaminants (trace metals, mineral matter)

4. To accomplish this, a two-step processing approach has been formulated. In the upgrading step, heavy feed is cracked into distillable liquids while trace metals are removed and coke-formers rejected or converted to less troublesome form. Liquid intermediates are further hydrorefined and hydrocracked at the second, or refining stage to produce finished aviation fuels.

5. Four upgrading processes were evaluated for processing three domestic bitumens and one heavy crude oil into high yields of JP-4. The upgraders were 1) delayed coking, 2) hydrovisbreaking, 3) the ART process, and 4) residuum hydrotreating. Based on preliminary estimates of refinery material and energy balances and comparison of economic parameters, hydrovisbreaking appeared the most suitable.

SECTION VII

RECOMMENDATIONS

1. The Phase I preliminary process estimates indicated hydrovisbreaking to be an attractive upgrading technique, when employed in combination with naphtha hydrotreating and naphtha hydrocracking, for converting very low quality feedstocks into aviation turbine fuel. It is recommended that Phase II, the small scale experimental portion of this program, continue with the investigation and demonstration of the suitability of the hydrovisbreaking process for this application.

2. Large cost penalties are incurred for the fully integrated bitumen refinery designs, when based on a nominal 7,500 BPSD capacity. Although beyond the scope of the current study, it is recommended that consideration be given to alternate processing approaches which could take better advantage of refining economies of scale. Given the poor transport properties of most bitumens, it may be appropriate to consider an on-site bitumen upgrader which produces a transportable synthetic crude. Refining of the synthetic crude to transportation fuels could be done on a larger scale in either a centrally located refinery of conventional design or in a refinery dedicated to the processing of synthetic crude.

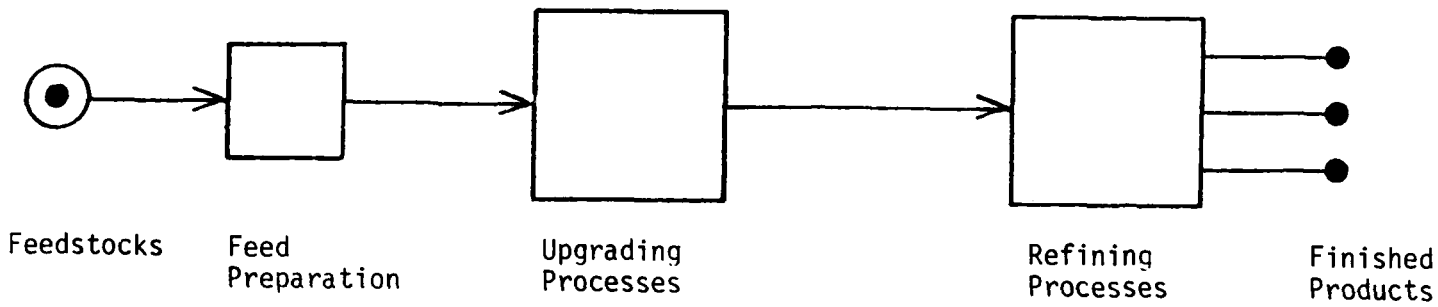

Figure 1. Generalized Processing Scheme - Turbine Fuel from Bitumen or Heavy Crude Oil

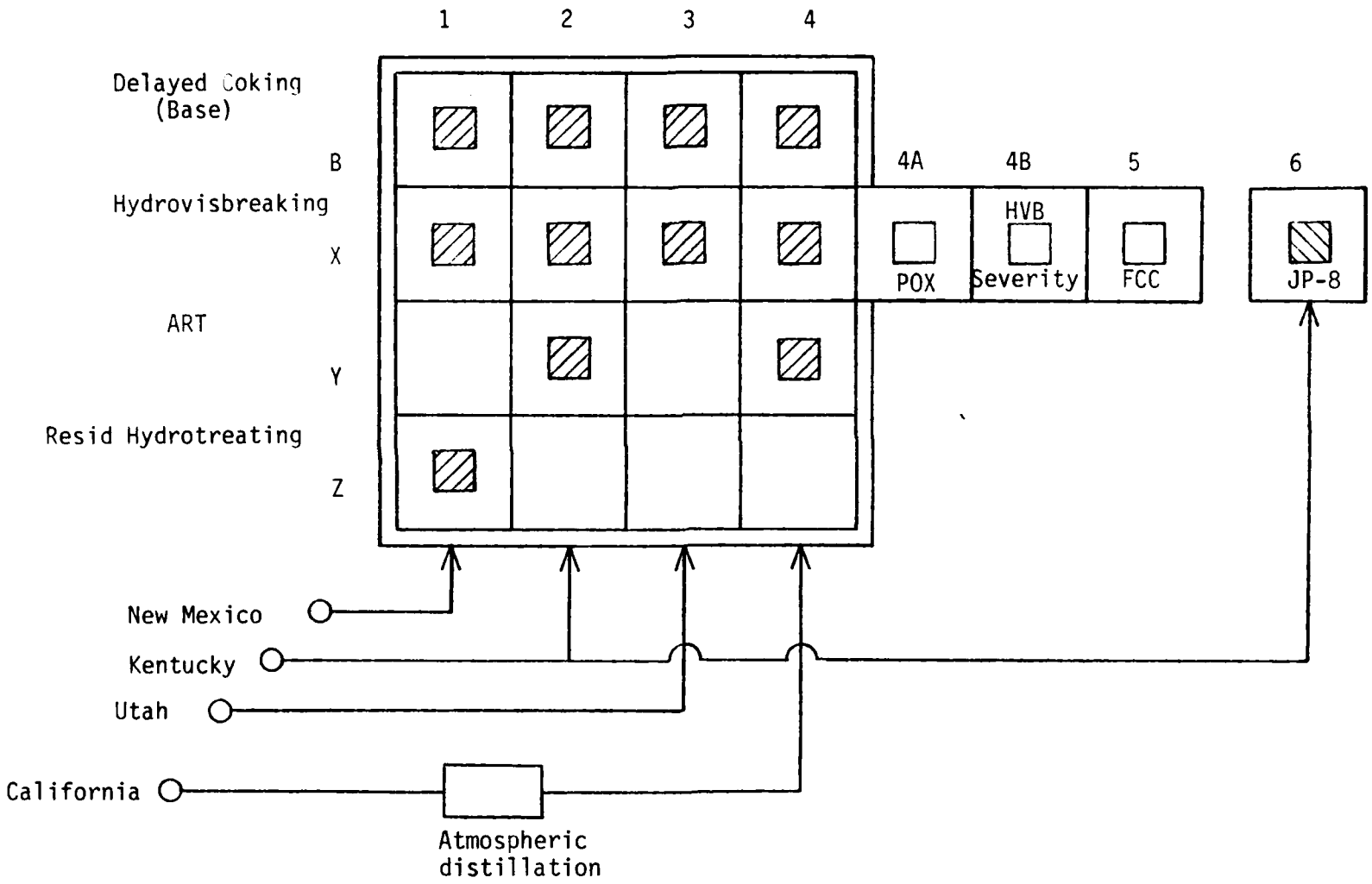

Figure 2. Case Studies Performed

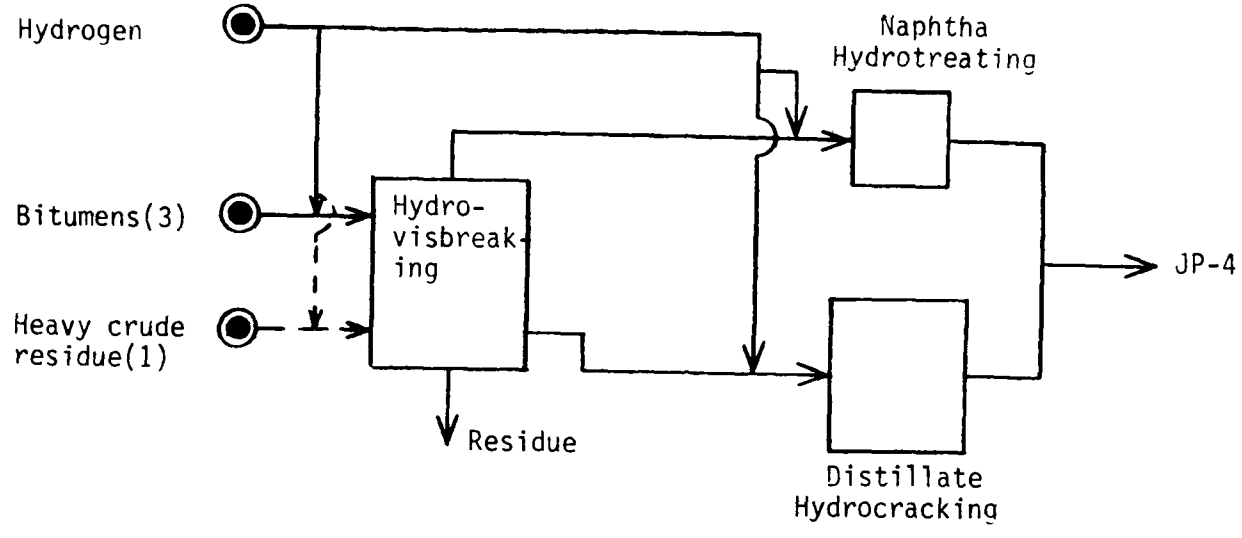

b. Case studies X1 through X4

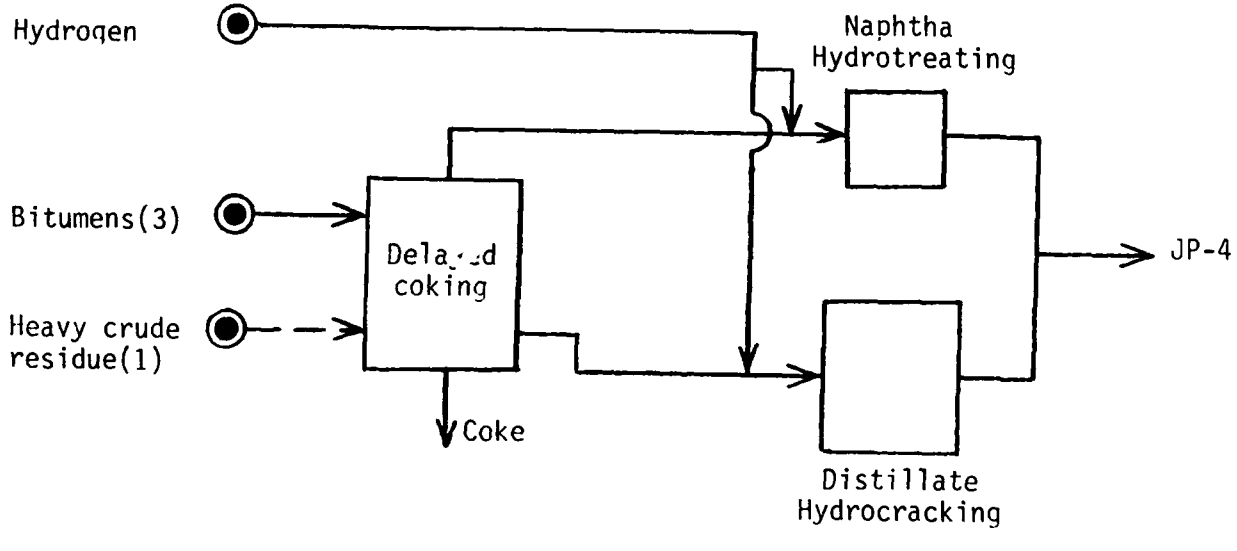

a. Case studies B1 through B4

Figure 3. Block Flow Diagrams of Processing Schemes

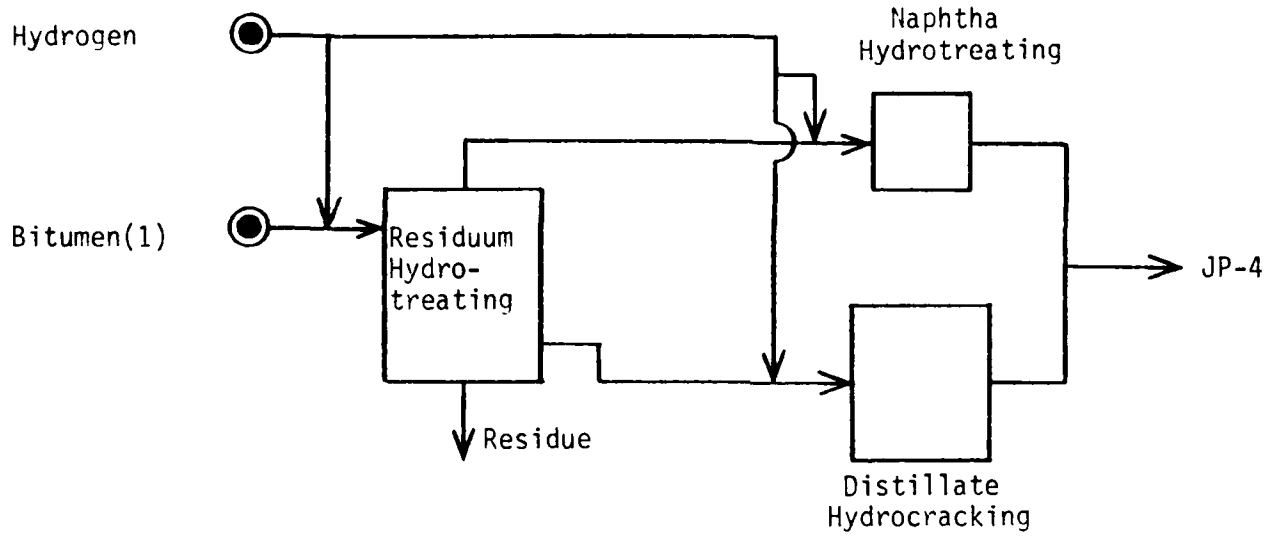

d. Case study Z1

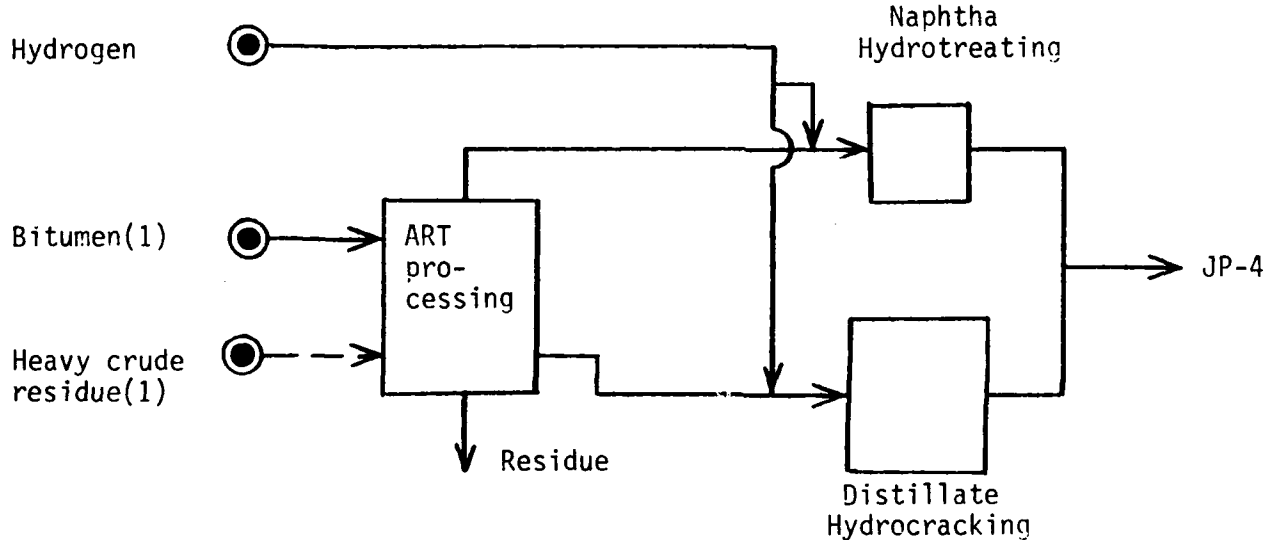

c. Case studies Y2 and Y4

Figure 3 (Cont'd). Block Flow Diagrams of Processing Schemes

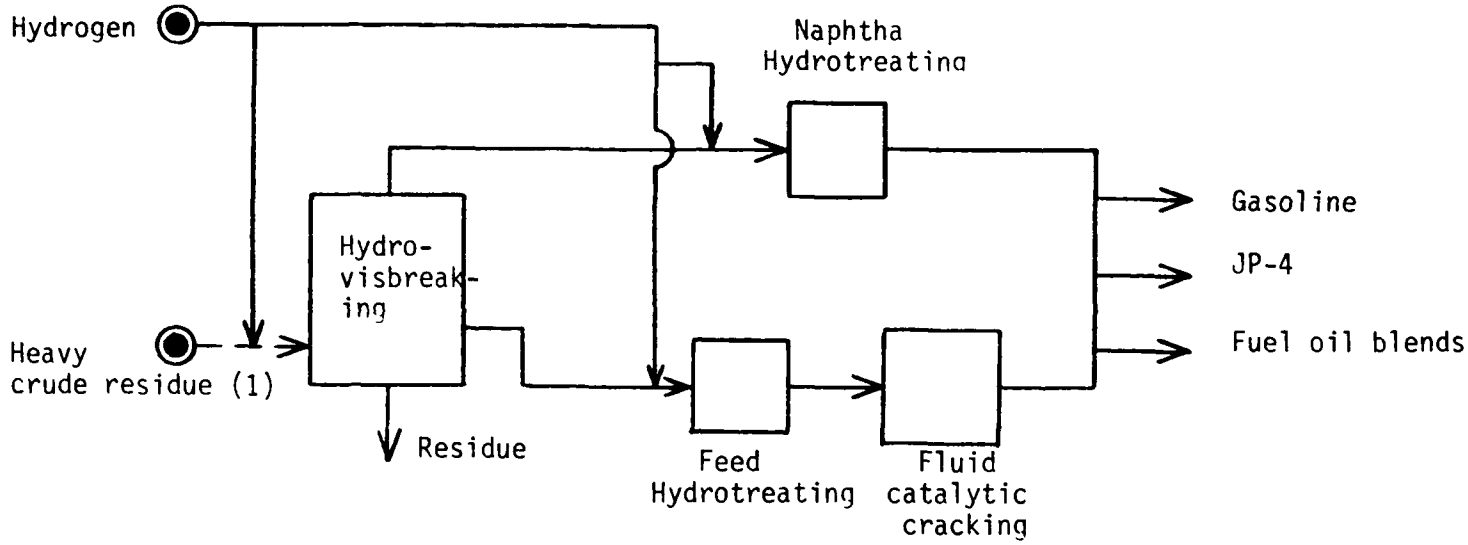

f. Case study X5

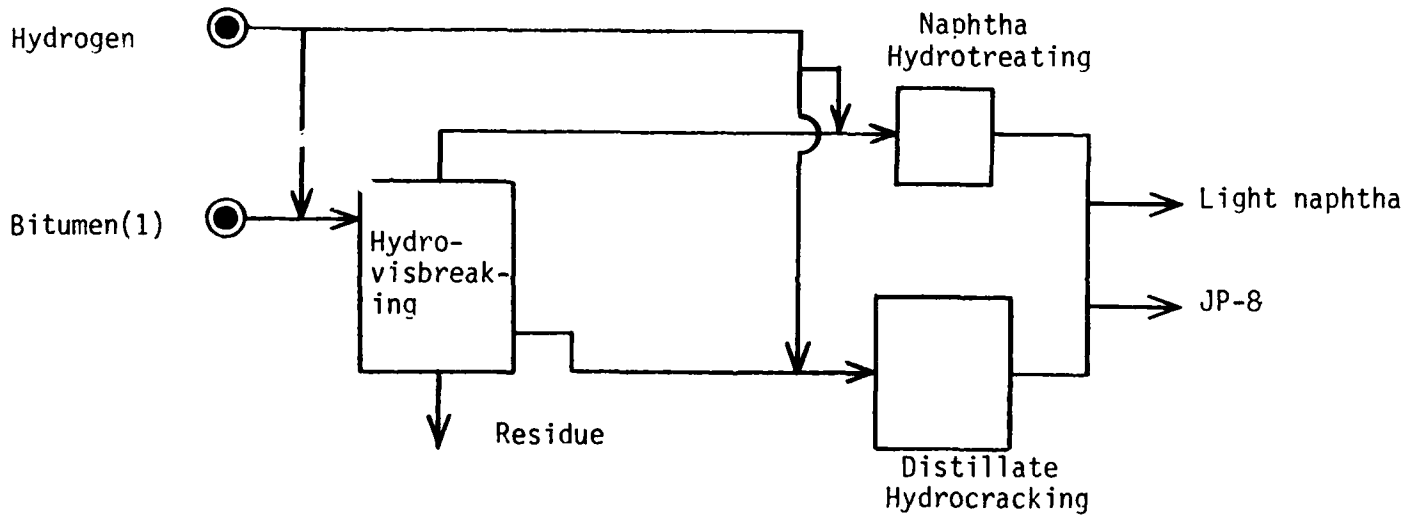

e. Case study X6

Figure 3 (Cont'd). Block Flow Diagrams of Processing Schemes

AD-A161 300 TURBINE FUELS FROM TAR SANDS BITUMEN AND HEAVY OIL 2/2
PHASE I PRELIMINARY PR..(U) SUNTECH INC MARCUS HOOK PA
A F TALBOT ET AL. 09 APR 85 AFWAL-TR-85-2013
UNCLASSIFIED F33615-83-C-2352 F/G 21/4 NL

END
FILMED
DTIC

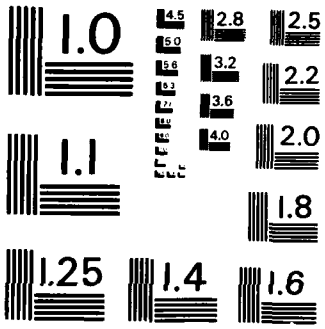

MICROCOPY RESOLUTION TEST CHART
NATIONAL BUREAU OF STANDARDS-1963-A

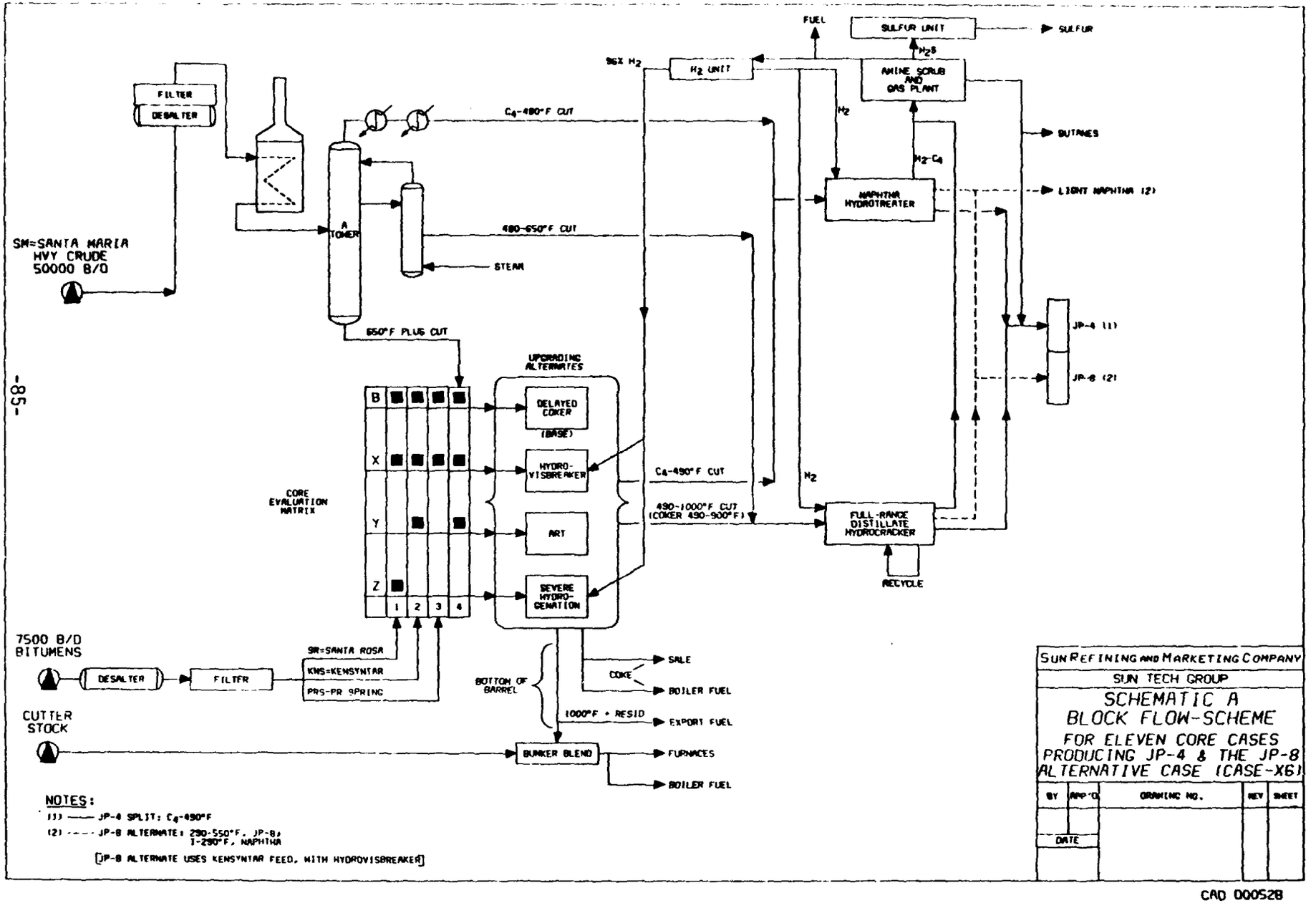

Figure 4. Overall Flow Schematic for Core Cases

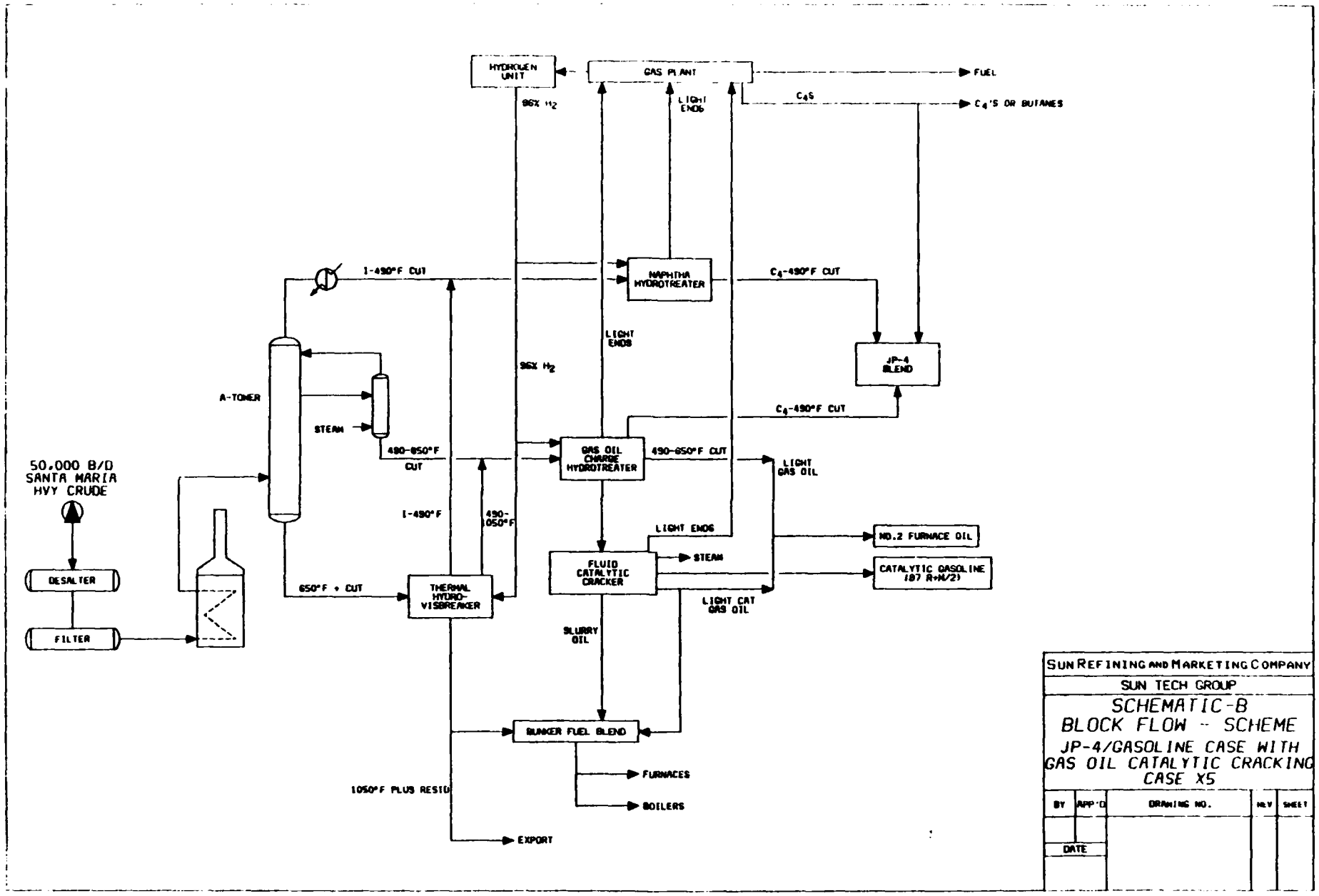

Figure 5. Block Flow Schematic for FCC Option

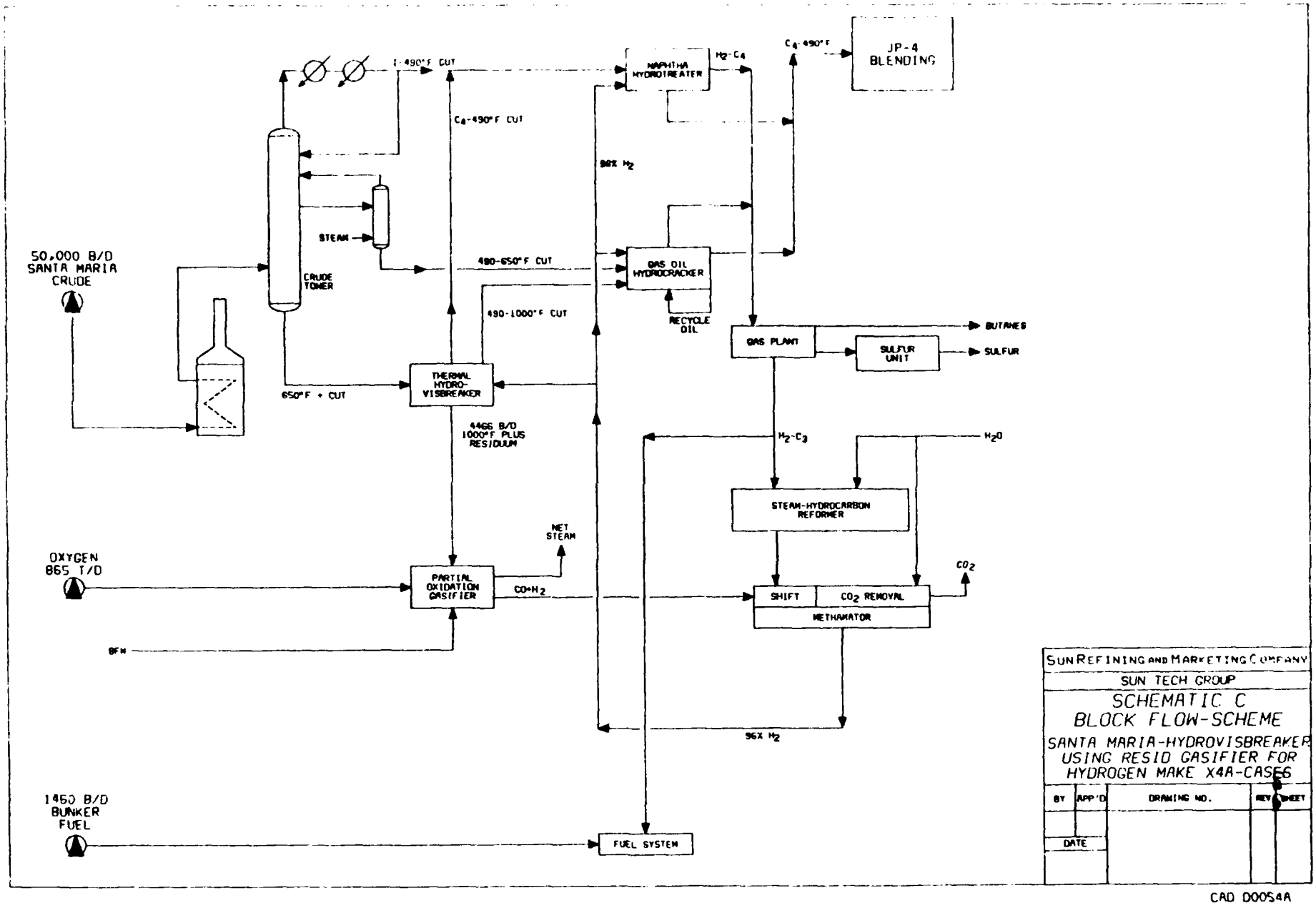

Figure 6. Block Flow Schematic with Resid Gasifier for Hydrogen Production

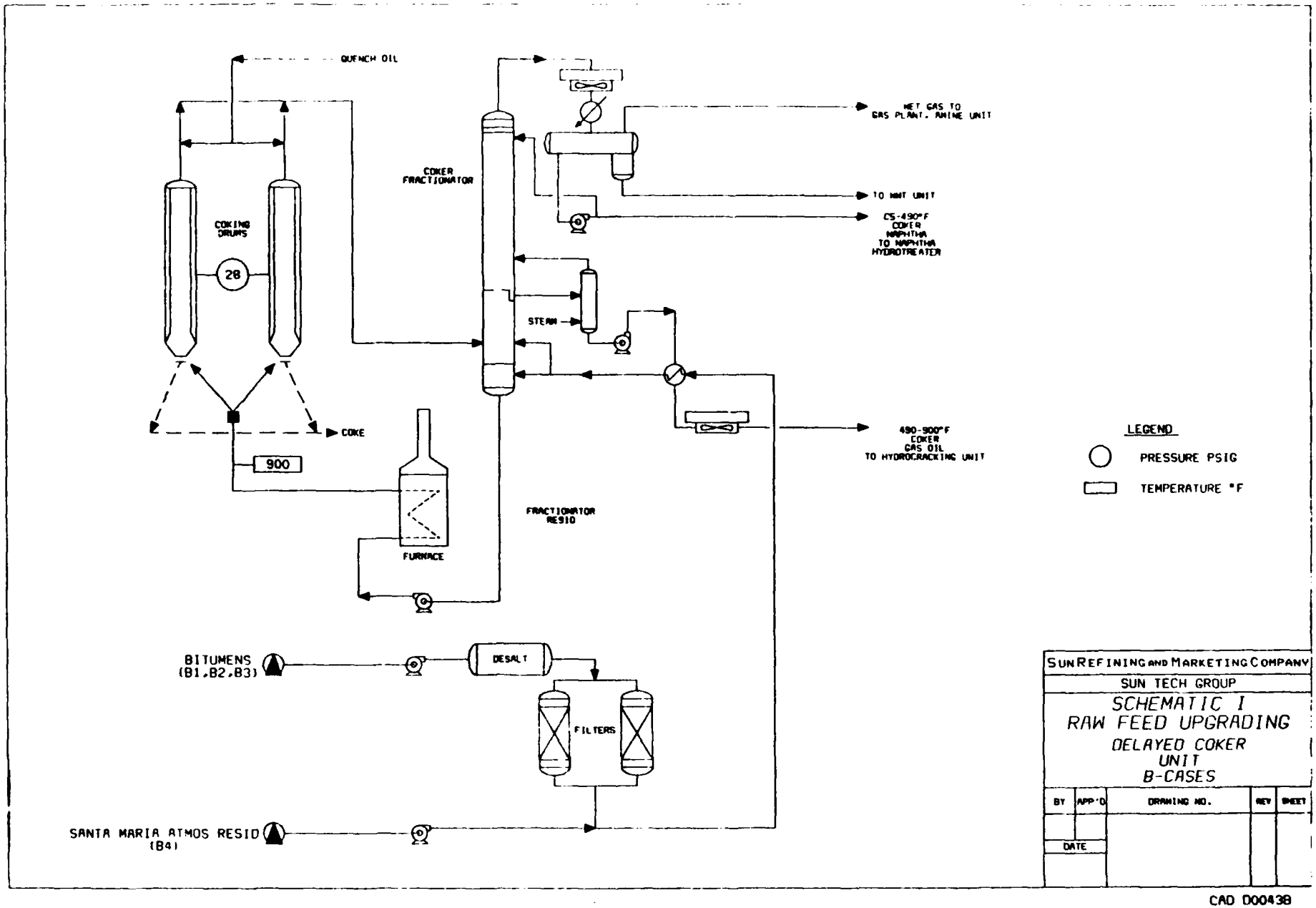

CAD D00438

Figure 7. Flow Schematic for Delayed Coker

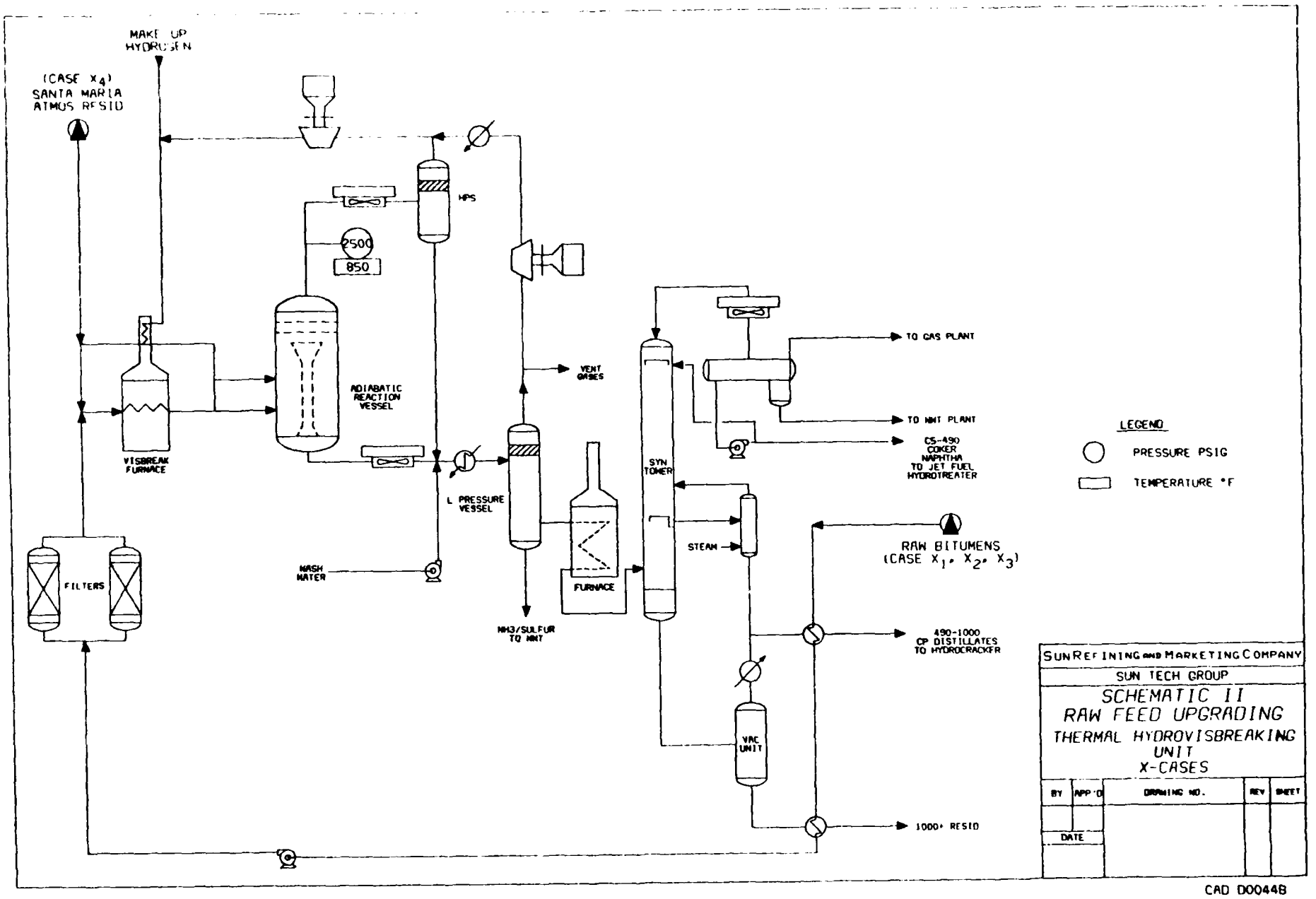

Figure 8. Flow Schematic for Hydrovisbreaker

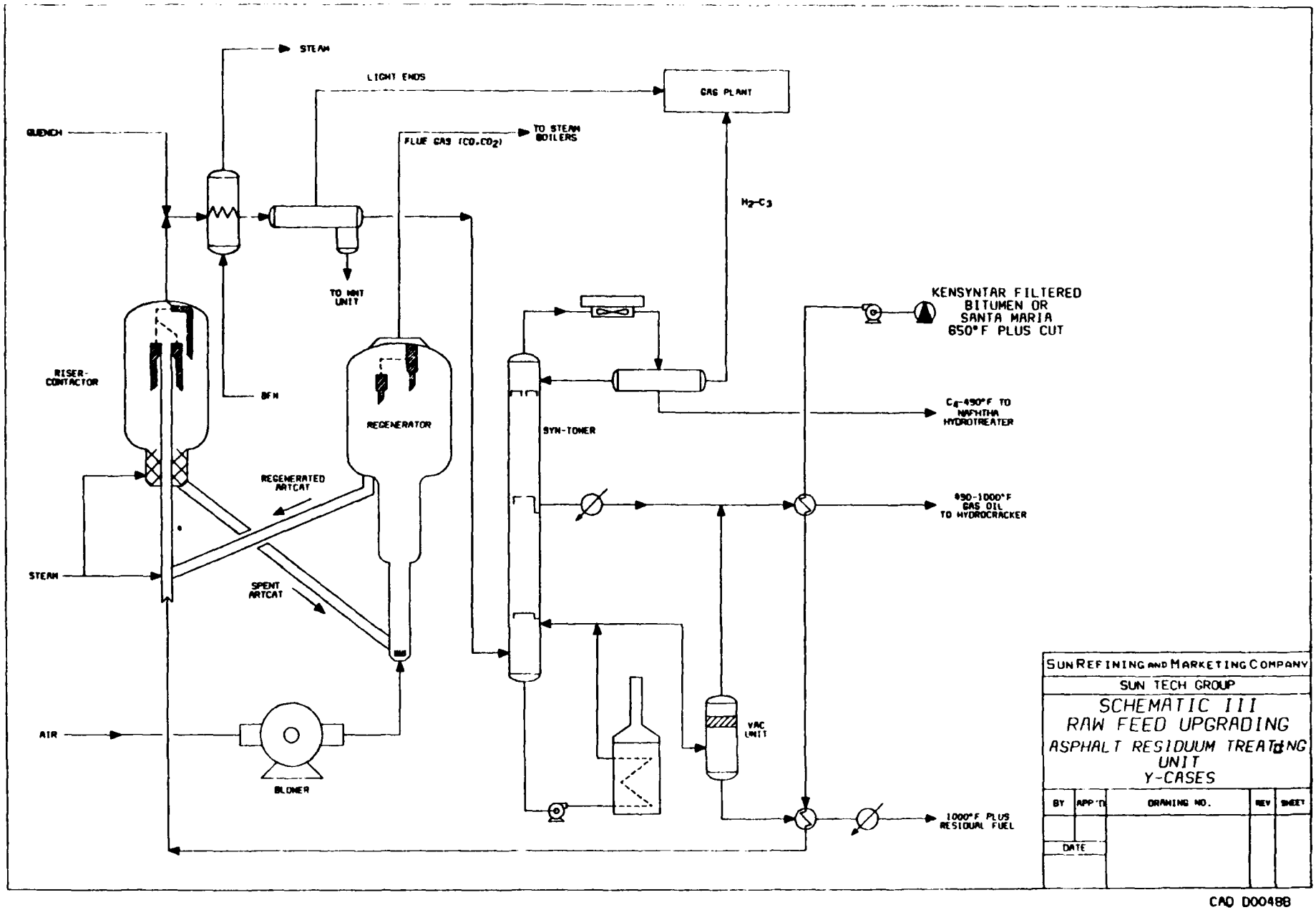

Figure 9. Flow Schematic for ART Process

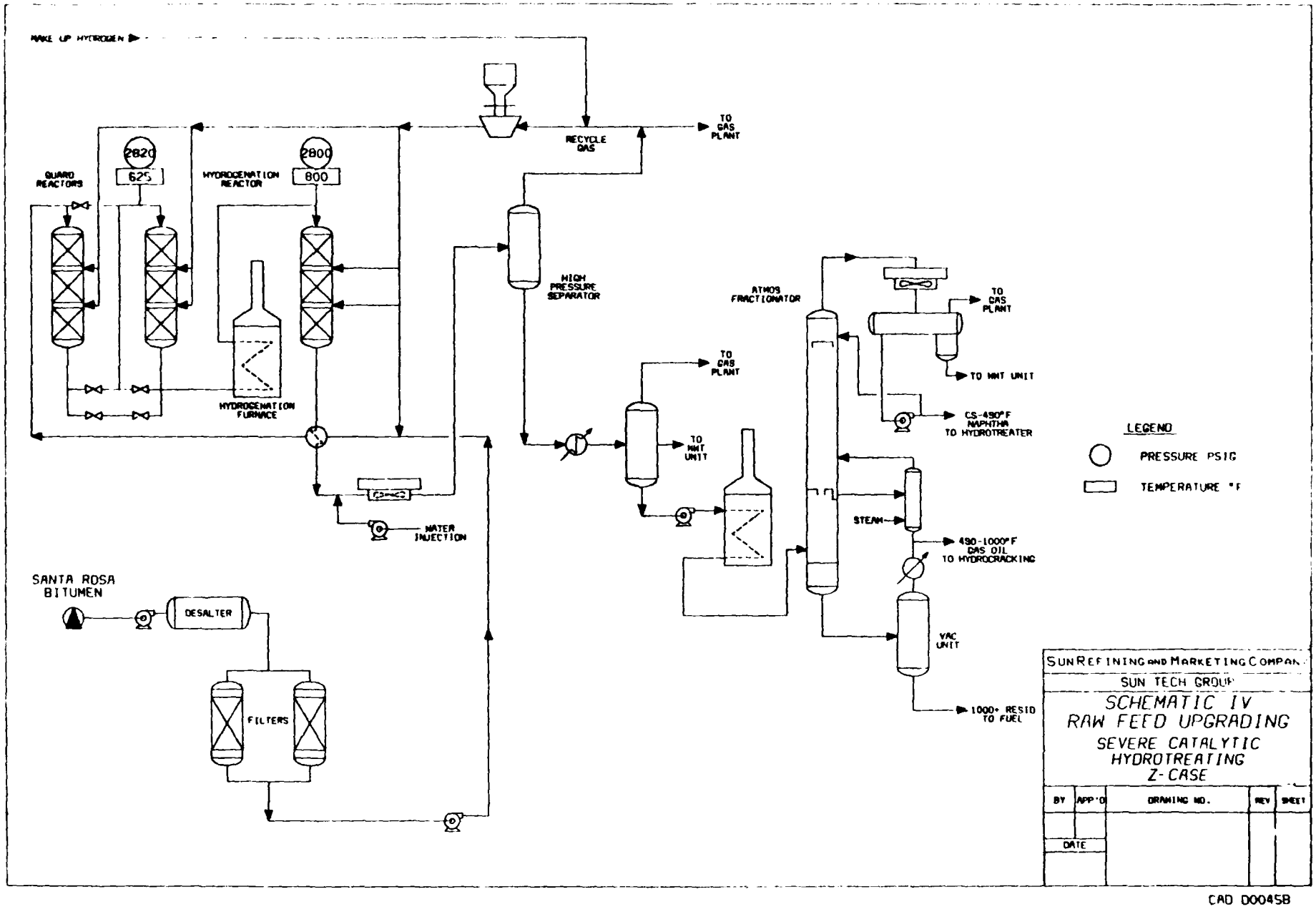

Figure 10. Flow Schematic for Residuum Hydrotreating

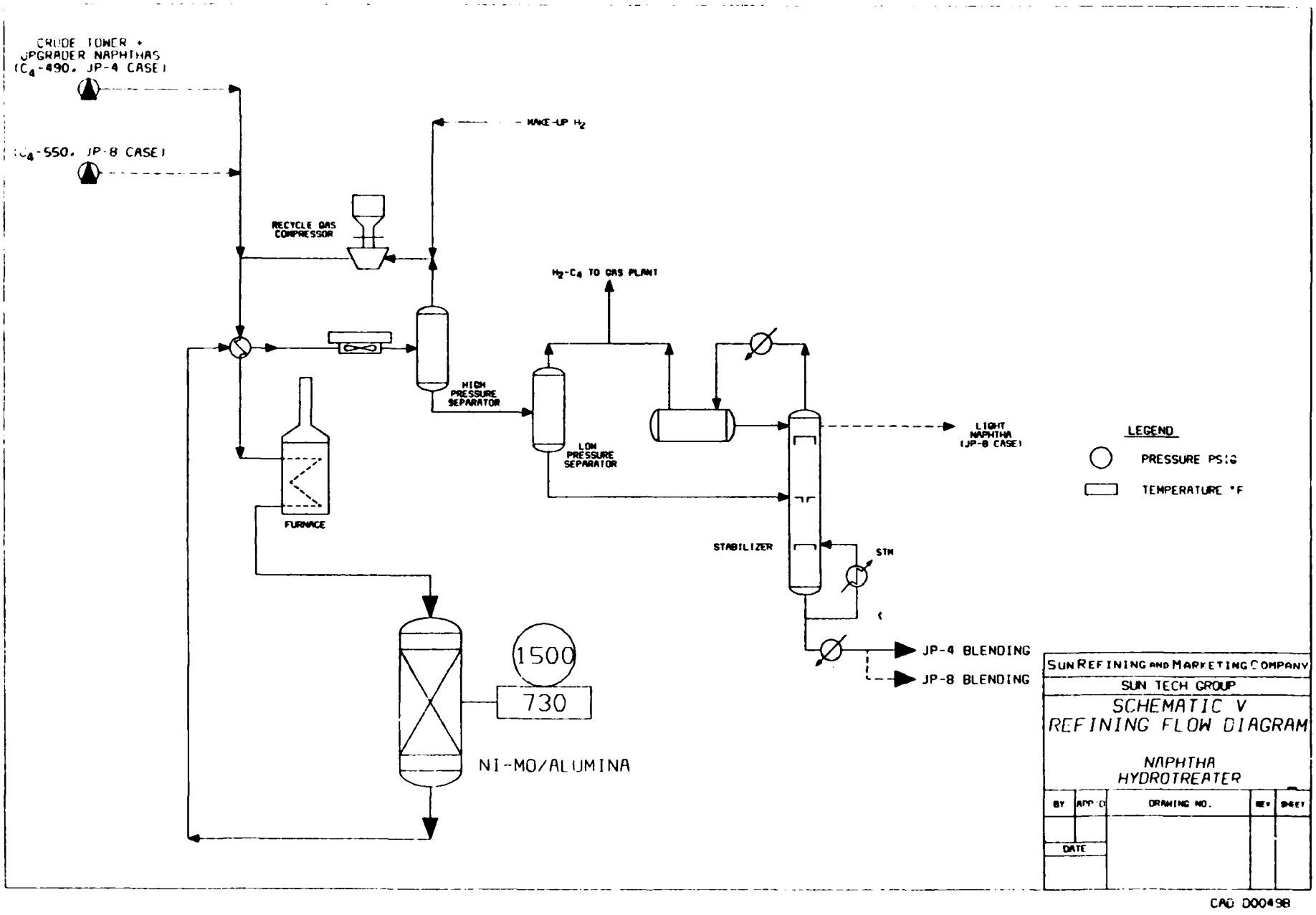

Figure 11. Flow Schematic for Naphtha Hydrotreater

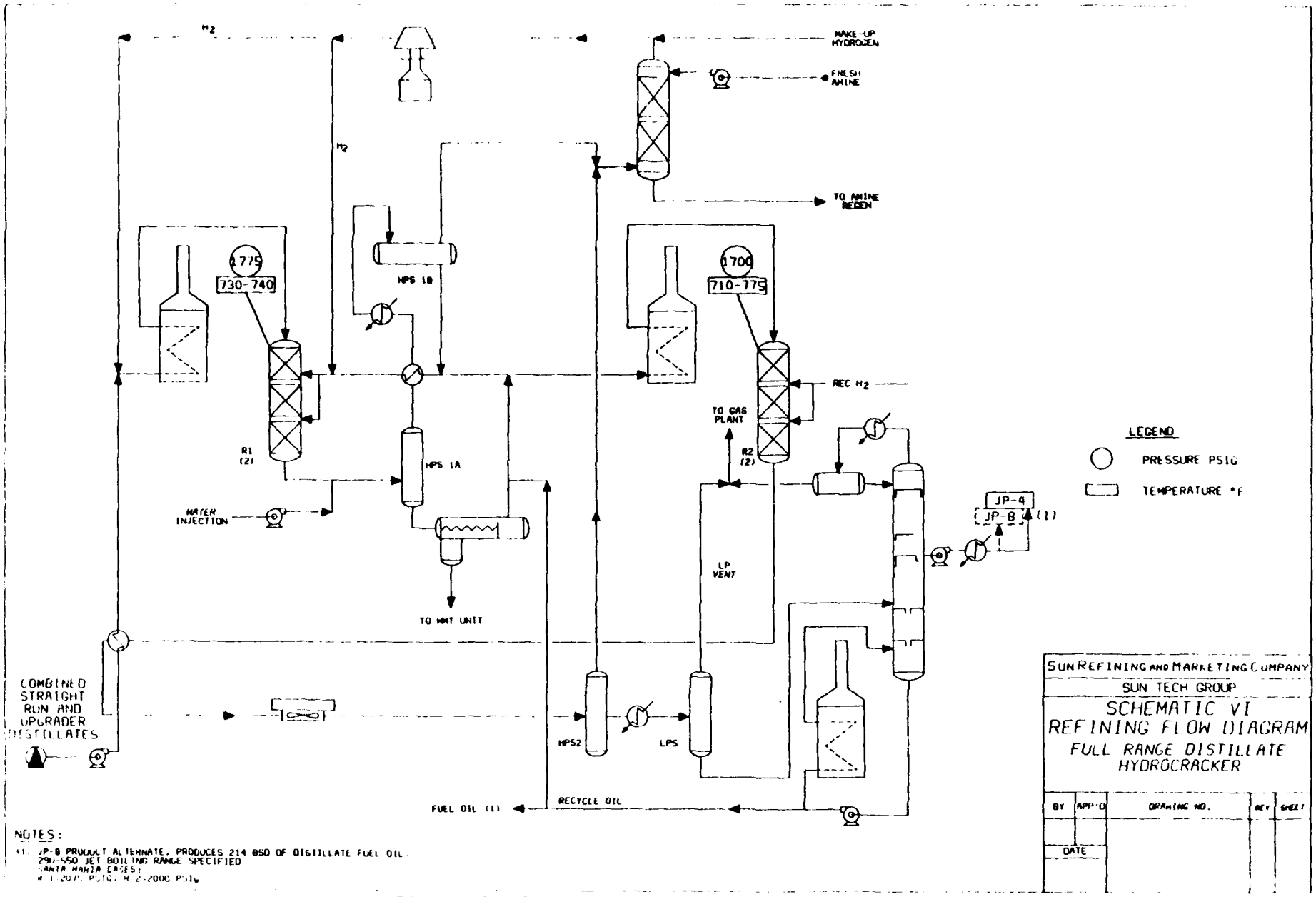

Figure 12. Flow Schematic for Distillate Hydrocracker

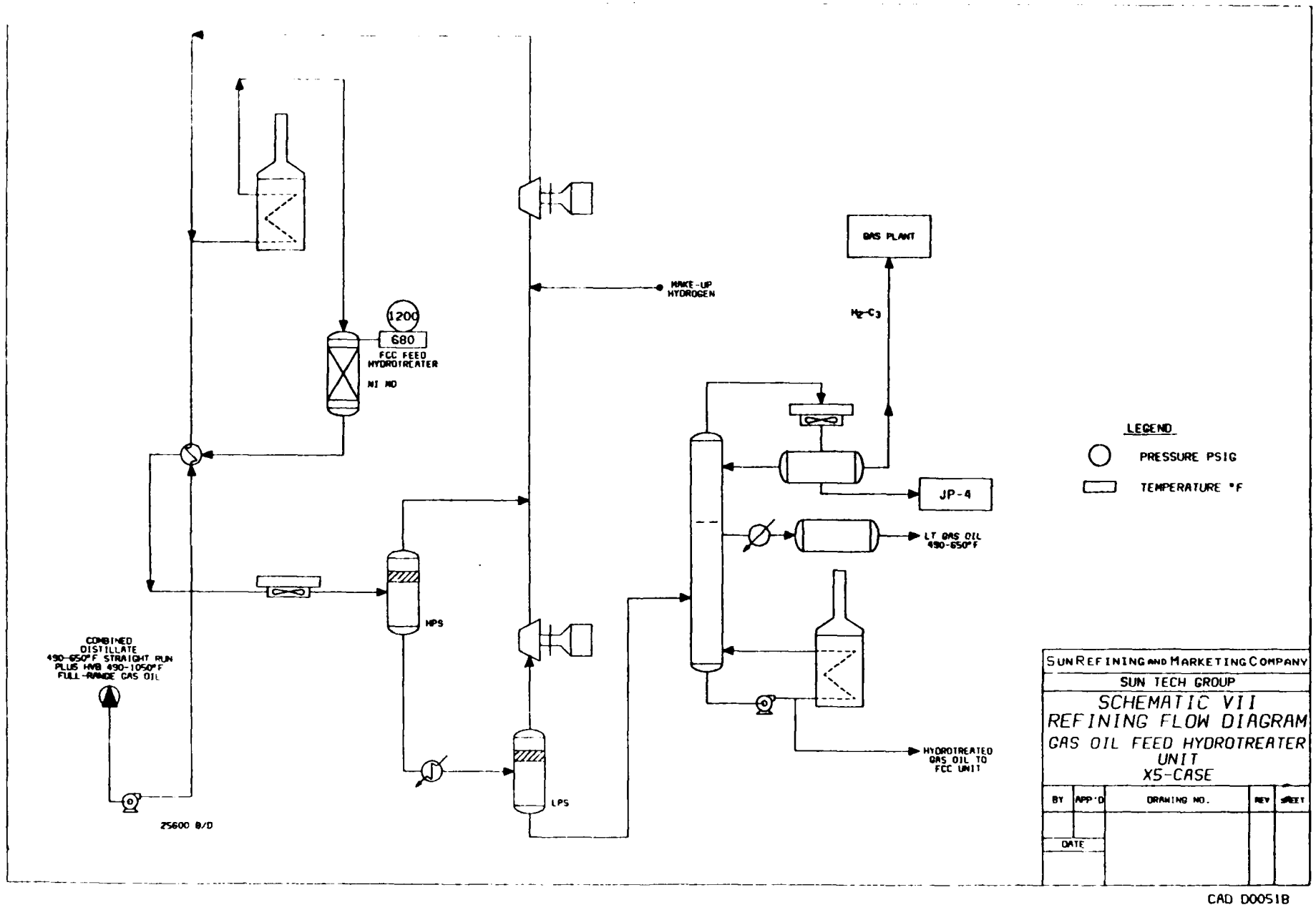

Figure 13. Flow Schematic for Gas Oil Feed Hydrotreater

Code: DLC Delayed coking
HVB Hydrovisbreaking
RHT Resid hydrotreating

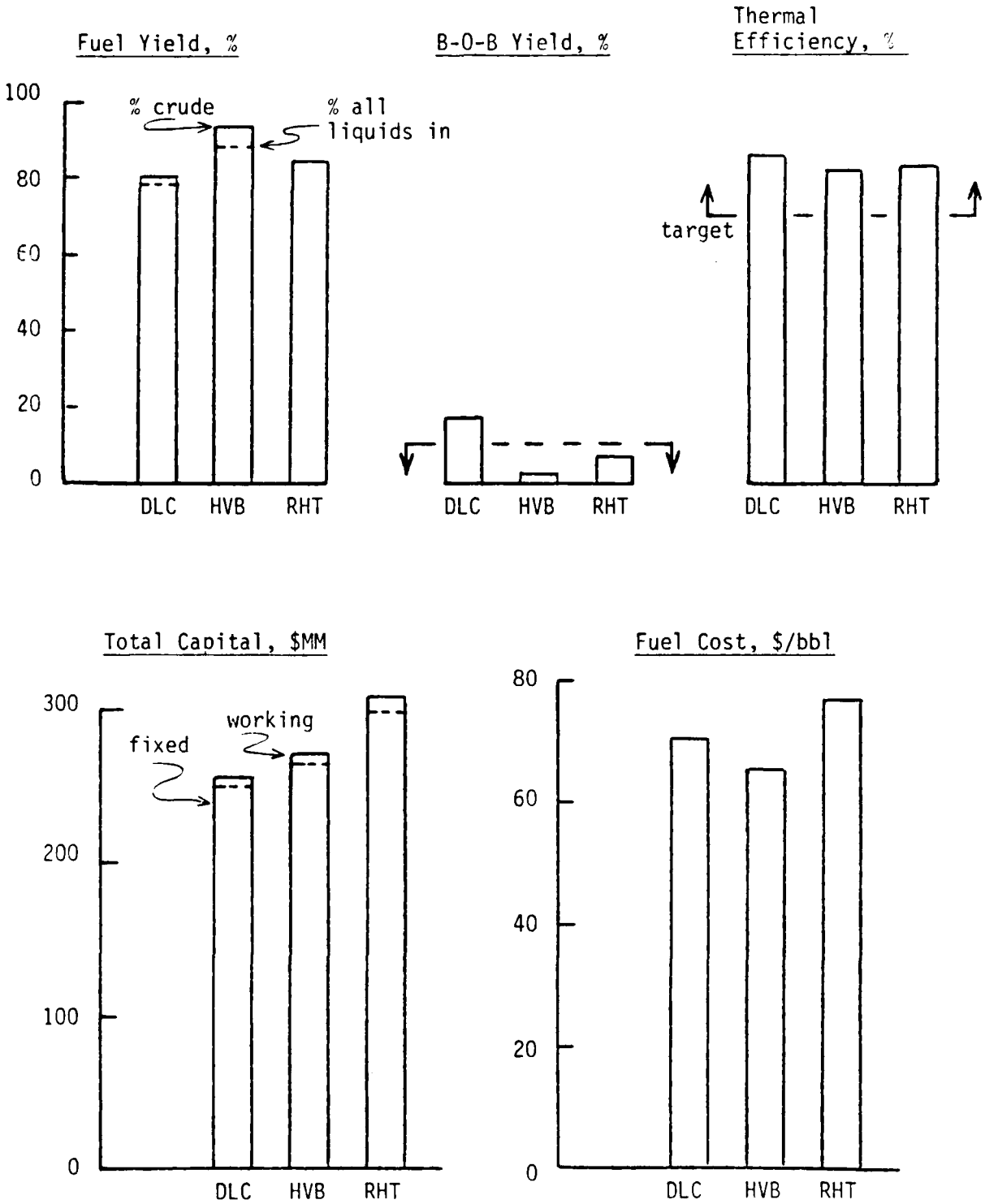

Figure 14. Summary of Case Studies for Processing Bitumen from New Mexico

Code: DLC Delayed coking
HVB Hydrovisbreaking
ART Asphalt residual treating

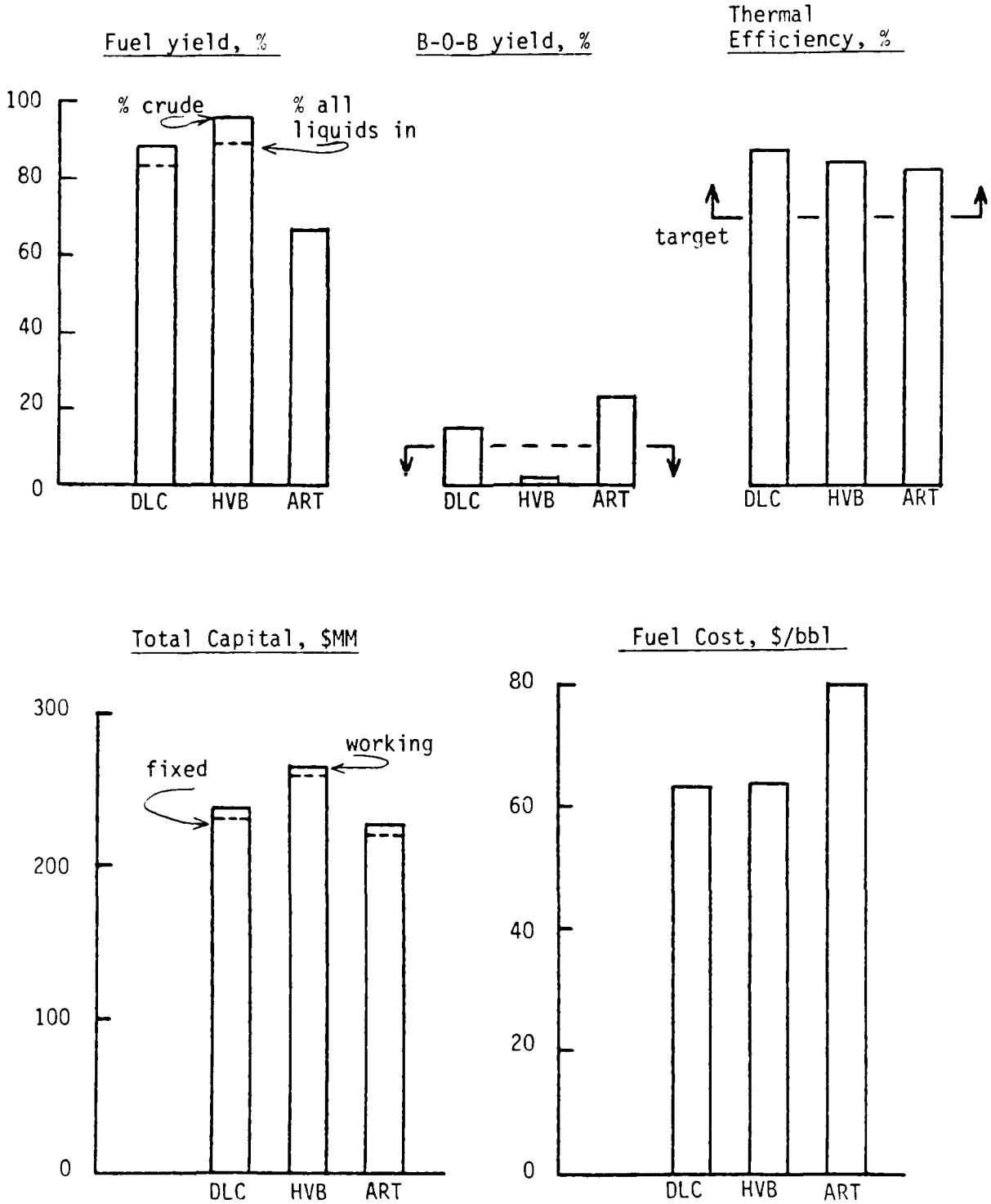

Figure 15. Summary of Case Studies for Processing Bitumen from Kentucky

Code: DLC Delayed coking
HVB Hydrovisbreaking

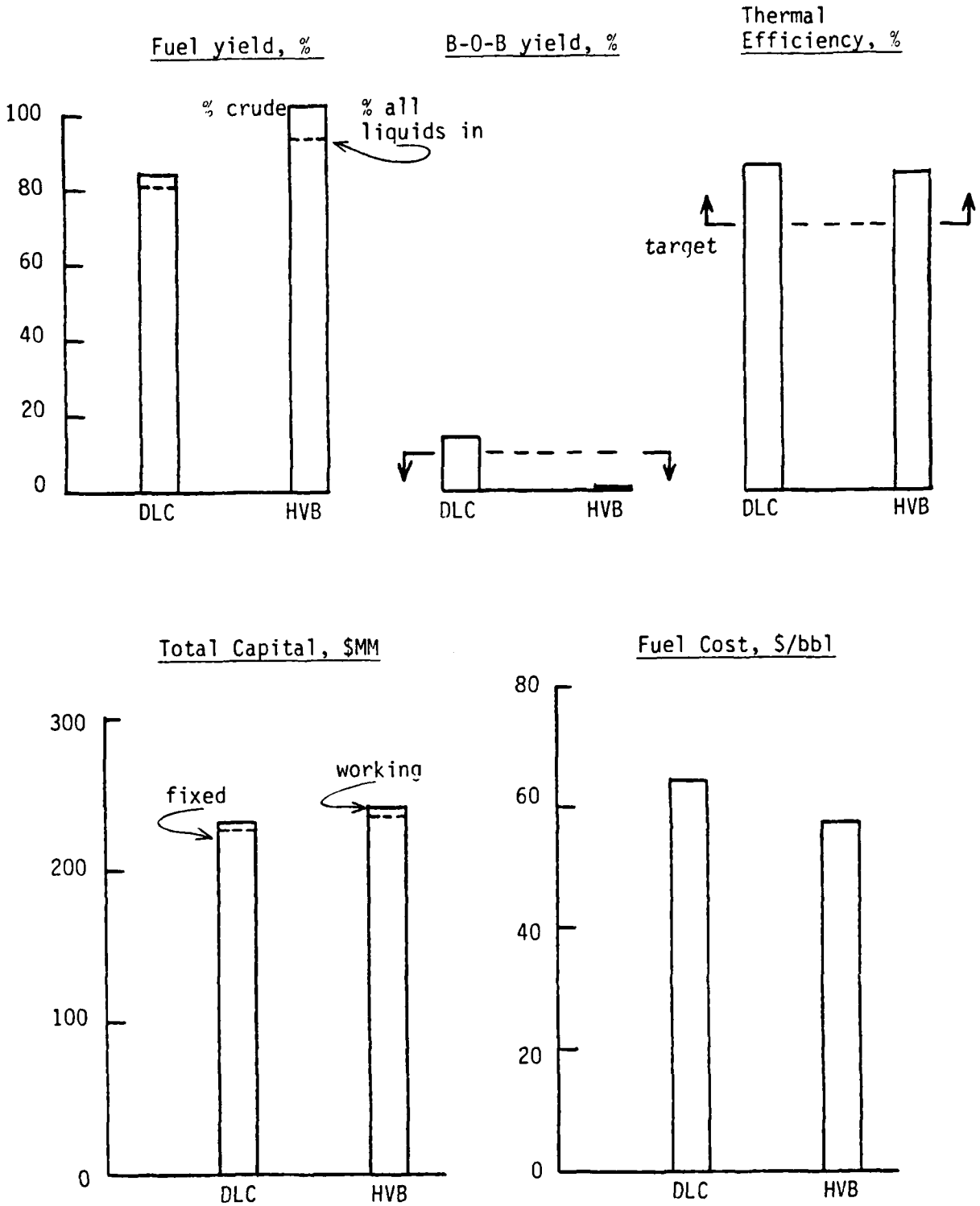

Figure 16. Summary of Case Studies for Processing Bitumen from Utah

Code: DLC Delayed coking
HVB Hydrovisbreaking
ART Asphalt residual treating

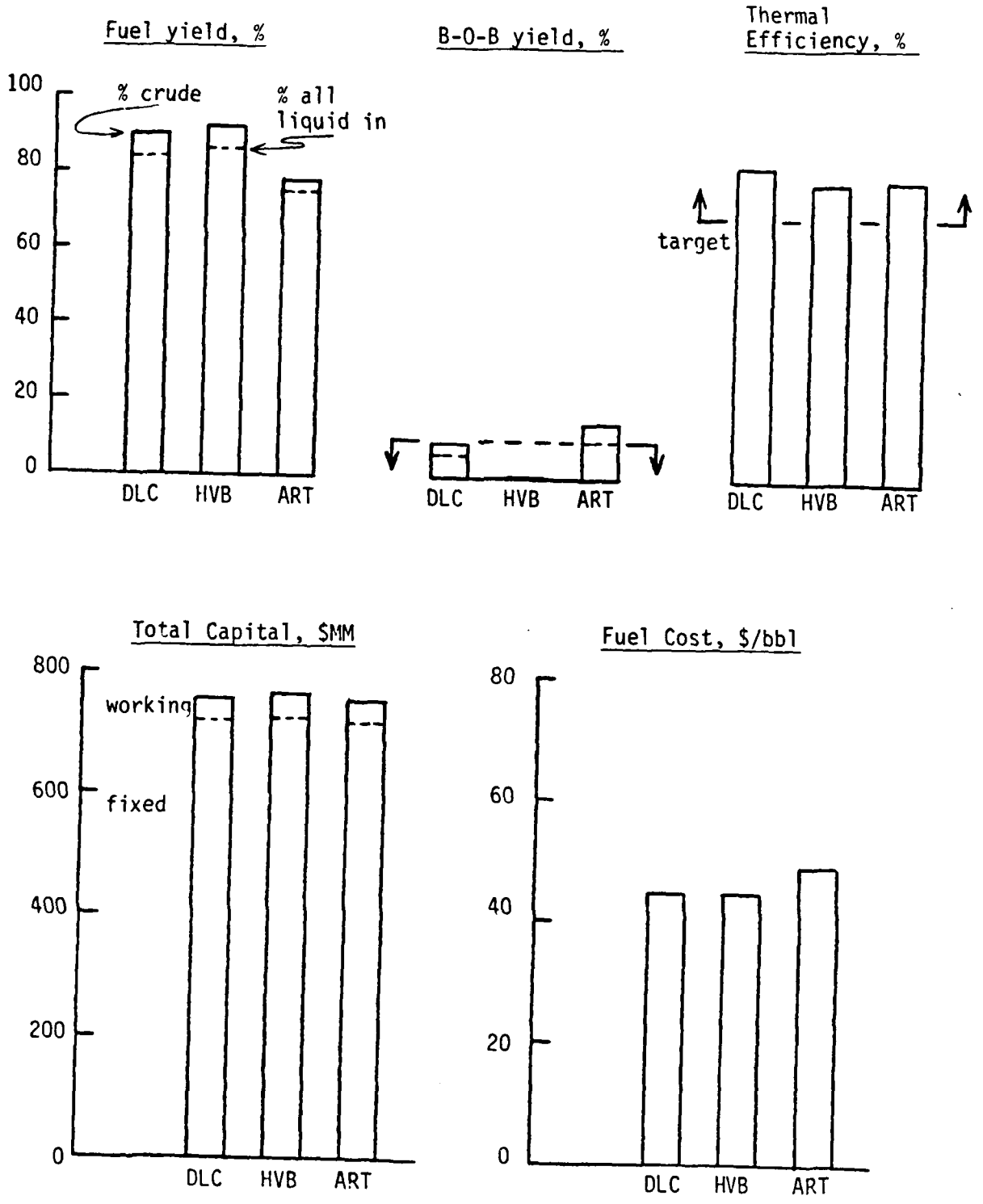

Figure 17. Summary of Case Studies for Processing Heavy Crude from California

TABLE 1

DISTRIBUTION OF U.S. HEAVY OIL RESERVOIRS BY STATE

	Millions of Barrels		
		Reserves	
State	Resource[1]	Proven	Potential
California	19,480	4035	11,700
Texas	5,840	570	2,600
Alaska	3,000	-	-
Arkansas	2,110	110	-
Louisiana	1,110	25	320
Wyoming	1,090	145	-
Others	-	45	-
	32,630	4930	14,620

[1] For reservoirs which contain at least 1 million barrels.

Source: References 4, 5

TABLE 2

MAJOR HEAVY OIL RESERVOIRS OF THE UNITED STATES

State	Field Name (County)	Resource: Oil-in-Place (Million Bbls.)
Arkansas	Smackover Old (Union)	1,600
California	San Ardo (Monterey)	1,200
	Belridge (Kern)	1,470
	Kern River (Kern)	2,900
	Cat Canyon (Santa Barbara)	400
	Santa Maria (Santa Maria)	350
	Coffee Canyon (Kern)	450
	Cymric (Kern)	600
	Kern Front (Kern)	650
	Midway Sunset (Kern)	4,500
	McKittrick (Kern)	900
	Lost Hills (Kern)	400
	Edison (Kern)	600
	Mount Poso (Kern)	400
	Poso Creek (Kern)	700
	Wilmington (Los Angeles)	1,000
	Yorba Linda (Orange)	350
Louisiana	Caddo Pine Island (Caddo)	750
Texas	Hawkins (Wood)	3,000
	Humble (Harris)	350
	Hull (Liberty)	400
	Sour Lake (Hardin)	300
Wyoming	Garland (Big Horn)	300

Source: Reference 5

TABLE 3

QUALITY PARAMETERS OF HEAVY CRUDE OILS

General	Specific
Low hydrogen/carbon	Heteroatom content
High molecular weight	sulfur
Low distillate yield	nitrogen
High pour point	oxygen
High viscosity	Trace metals
High specific gravity	nickel
High carbon residue	vanadium
High asphaltenes	iron
	Contaminants
	water
	particulates
	Chemical type

TABLE 4

CHARACTERISTICS OF SOME HEAVY CRUDE OILS

	California								Alabama	Arkansas	Texas	Louisiana	Wyoming
Source	Oxnard	Wilmington	Kern River	San Ardo	Midway Sunset	Belridge	Santa Maria	McKittrick	Toxey	Smackover	Humble	Caddo-Pine	Garland
Physical properties													
Gravity, °API	3.9	19.4	12.6	11	13.5	15	17.5	15.6	19.4	19.8	15.4	21	19.8
Pour point, °F	-	<5	45	80	10	30	-	25	<5	<5	20	<5	<5
Distilled @ 745°F, vol.%	-	46.3	27.6	26.4	53	42	42	47.4	46.5	44.5	44	40.6	51.3
Carbon residue, wt. %	10-16	5	7	4.6	4	6	7	2	6	7.2	3.6	5	9.6
Composition													
Sulfur, wt.%	8	1.6	1.2	2.3	1.2	0.2	4.6	0.96	4.6	2.3	0.5	0.49	3.1
Nitrogen, wt.%	0.7	0.6	0.6	0.9	0.8	0.77	0.67	0.67	0.19	0.1	0.1	-	0.3
Trace Metals, ppmw	1000	-	-	327	-	216	-	-	-	-	-	-	-

Source: Reference 7

TABLE 5

DISTRIBUTION OF BITUMEN DEPOSITS BY STATE

State	Millions of Barrels		
	Resource[1]		Reserves[2]
	Known	Speculative	
Utah	13,150	6,960	2,011
Alaska	-	10,000	1,000
Alabama	900	4,600	550
Texas	3,850	900	475
California	2,040	2,600	464
Tri-state (Kansas Missouri, Oklahoma)	220	3,500	372
Kentucky	1,785	1,700	348
New Mexico	130	160	29
Wyoming	-	100	10
TOTALS	22,075	30,520	5,260

[1] For deposits which contain at least 100 million barrels.

[2] Based on known plus speculative, assumes 10% recoverable.

Source: Reference 4

TABLE 6

SIGNIFICANT TAR SANDS DEPOSITS

State	Deposit	Resource, millions of barrels Known	Speculative
Utah	Asphalt Ridge	580	80
	Circle Cliffs	580	1,230
	Hill Creek	320	530
	Nequoia Arch	730	160
	P. R. Spring	2,570	3,050
	San Rafael Swell	300	200
	Sunnyside	4,900	870
	Tar Sand Triangle	2,500	520
	Others	670	320
		13,150	6,960
Texas	Anacacho	530	-
	Hensel	120	-
	San Miguel D	3,200	-
		3,850	900
California	Casmalia	120	130
	Cat Canyon	930	270
	Edna (Arroyo Grande)	230	-
	Oxnard (Vaca & lower)	500	165
	Santa Maria Foxen	-	2,250
	Others	210	100
		2,040	2,595

Source: Reference 4

TABLE 7

CHARACTERISTICS OF SOME TAR SANDS BITUMENS

Source	Utah, Northeast	Utah, Southeast	Wyoming, Trapper Canyon	Texas, San Miguel	New Mexico, Santa Rosa	Kentucky, Big Clifty	Missouri, Bellamy	Alberta, Athabasca
Physical properties								
Gravity, °API	12	9	5	-2	5	9	10	10
Pour point, °F	125	95	125	180		85	-	75
Distilled @ 1000°F, wt.%	64	60	60	65		54	55	55
Carbon residue, wt.%	11	20	15	24	22	17	-	14
Composition								
H/C atom ratio	1.46	1.44	1.49	1.34	1.41	1.56	1.42	1.53
Wt.% sulfur,	0.5	4.5	5.5	10.0	2.3	1.6	0.8	4.9
Wt.% nitrogen,	1.0	0.5	0.5	0.4	0.2	0.6	0.1	0.4
Trace metals, ppmw								
Vanadium	23	151	91	85	25	198	-	196
Nickel	96	62	53	24	23	80	-	82

Source: Reference 11

TABLE 8

FEEDSTOCK CHARACTERISTICS

Type	Bitumen			Heavy Crude Residue
Source	New Mexico	Kentucky	Utah	California[2]
Physical properties				
API gravity	8.5	9.2	10.3	6.2
Sp. gravity 60/60	1.011	1.006	0.998	1.028
Distillation, °F @ ____ %[1]				
IBP	158	496	-	660
5	486	570	569	-
10	558	612	700	765
20	680	692	858	-
30	785	799	-	867
40	889	890	-	-
50	-	980	-	964
EP	943° @ 45%	1005° @ 52%	1000° @ 28%	
Conradson carbon, wt. %	17.4	15.0	13.3	9.9
Chemical analysis, by weight				
Carbon, %	86.6	83.3	84.4	-
Hydrogen, %	10.4	11.0	11.0	-
Nitrogen, %	0.31	0.52	1.00	0.95
Oxygen, %	1.31	-	2.2	-
Sulfur, %	2.16	1.53	0.75	6.03
H/C atomic ratio	1.44	1.58	1.56	-

[1] Results for Kentucky and Santa Maria samples by vacuum distillation; others by gas chromatographic simulated distillation.

[2] Data for 650°F bottoms fraction, which is 638 vol.% (69.0 wt.%) of whole crude. See Appendix A for whole crude properties.

[3] Values estimated, based on other California crudes.

TABLE 8 (CONT'D)

FEEDSTOCK CHARACTERISTICS

Type	Bitumen			Heavy Crude Residue
Source	New Mexico	Kentucky	Utah	California[2]
Chemical analysis, by weight (Cont'd)				
Ash, %	-	0.22	0.17	0.04[3]
Nickel, ppm	13.7	-	98	104[3]
Vanadium, ppm	24.9	175	25	94[3]
Iron, ppm	-	91	-	114[3]
Hydrocarbon composition, wt. %				
Saturates	28.7	-	25.7	-
Aromatics	13.5	-	24.9	-
Polar aromatics	36.0	-	33.4	-
Asphaltenes	21.8	-	16.0	-

[1] Results for Kentucky and Santa Maria samples by vacuum distillation; others by gas chromatographic simulated distillation.

[2] Data for 650°F bottoms fraction, which is 638 vol.% (69.0 wt.%) of whole crude. See Appendix A for whole crude properties.

[3] Values estimated, based on other California crudes.

TABLE 9

DELAYED COKING PROCESS ESTIMATES

Operating Conditions:		
	Feed	31,900 BPSD 650°F+ from heavy crude, or 7,500 BPSD bitumen
	Steam	4.05 lb/bbl. feed
	Heater outlet	900°F
	Drum pressure	28.3 psig

Feed type	Bitumen						Heavy Crude	
Feed source	Santa Rosa, New Mexico		Kensyntar, Kentucky		P. R. Spring, Utah		Santa Maria Valley, CA	
Feed °API	8.5		9.2		10.3		6.2	
Case study	B1		B2		B3		B4	
Product yields, % feed	wt.	vol.	wt.	vol.	wt.	vol.	wt.	vol.
C_3 & lighter, H_2S	8.6		6.1		7.6		7.2	
Butane	2.6	4.6	1.8	3.1	2.3	4.0	2.1	3.9
C_5+ Liquid	68.1	77.9	75.0	85.5	72.4	81.8	73.7	85.0
C_5 - 490°F	18.8	24.2	23.3	29.4	23.8	29.9	23.7	30.4
490 - 900°F	49.3	53.7	51.7	56.1	48.6	51.9	50.0	54.6
Coke	20.7		17.1		17.7		17.0	
Product properties[1]								
C_5 - 490°F								
°API	48.4		46.0		46.6		44.7	
Wt.% sulfur	1.14		0.66		0.32		2.54	
Wt.% nitrogen	0.05		0.07		0.13		0.12	
490 - 900°F								
°API	20.9		21.1		19.8		18.5	
Wt.% sulfur	1.53		1.04		0.54		4.22	
Wt.% nitrogen	0.14		0.22		0.45		0.42	
Coke								
Wt.% sulfur	3.13		2.65		1.27		10.6	
Wt.% nitrogen	1.12		2.28		4.24		4.19	

[1] Based on feed to coker. For bitumens, this is 100% of refinery feed. For heavy crude, the 650°F+ fraction is 64 volume %, or 69 weight % of refinery feed.

TABLE 10

HYDROVISBREAKING PROCESS ESTIMATES

Operating conditions:		
	Feed	31,900 BPSD 650°F+ from heavy crude, or 7,500 BPSD bitumen
	LHSV[1]	0.6 to 0.8 hr^{-1}
	Avg. temperature	825°F
	Total pressure	2,500 psig
	Recycle gas rate	5,000 SCF/Bbl
	Hydrogen consumed	820-915 SCF/Bbl

Feed type	Bitumen						Heavy Crude					
	Santa Rosa, New Mexico		Kensyntar, Kentucky		P.R. Spring Utah		Santa Maria Valley California					
Feed °API	8.5		9.2		10.3		6.2		6.2		6.2	
Case study	X1		X2, X6		X3		X4, X4A		X5		X4B	
Product yields, % feed	wt.	vol.	wt.	vol.	wt.	vol.	wt.	vol.	wt.	vol.	wt.	vol.
C_3 & lighter, H_2S	7.0		7.4		7.5		9.2		9.2			
C_4+ Liquid	94.3	103.7	93.8	102.5	93.9	105.3	92.0	101.0	92.0	101.0	92.0	101.0
C_4 - 490°F	22.1	26.7	21.4	26.7	35.9	44.8	21.6	27.0	21.6	27.0	21.6	27.0
490 - 1000°F	59.9	66.7	60.8	66.1	50.7	54.4	54.6	60.0	57.9	62.9	59.0	64.0
>1000°F	12.3	10.3	11.6	9.7	7.3	6.1	15.8	14.0	12.5	11.1	11.4	10.0
Product properties[3]												
C_4 - 490°F												
°API	39.5		45.4		45.1		40.7		40.7		40.7	
Wt. % sulfur	0.32		0.28		0.11		0.83		0.83		0.83	
Wt. % nitrogen	0.04		0.19		0.18		0.13		0.13		0.13	
490 - 1000°F												
°API	26.1		22.3		20.5		24.0		20.7[3]		24.0	
Wt. % sulfur	0.87		0.57		0.39		2.23		2.31		2.23	
Wt. % nitrogen	0.11		0.18		0.44		0.34		0.38		0.34	

[1] Liquid hourly space velocity, in volumes feed per volume reactor per hour.

[2] Based on feed to hydrovisbreaker. For bitumens, this is 100% of refinery feed. For heavy crude, the 650°F+ fraction is 64 volume %, or 69 weight % of refinery feed.

[3] For Case X5, cut point is 1050°F.

TABLE 11

ASPHALT RESIDUAL TREATING (ART) PROCESS ESTIMATES

Operating conditions:	Feed	31,900 BPSD 650°F+ from heavy crude, or 7,500 BPSD bitumen
	ARTCAT™ consumption	3.0 to 3.3 #/bbl. feed

Feed type	Bitumen		Heavy Crude	
Feed source	Kensyntar Kentucky		Santa Maria Valley, CA	
Feed °API	9.2		6.2	
Case study	Y2		Y4	
Product yields, % feed	wt.	vol.	wt.	vol.
C_3 & lighter, H_2S	4.1		4.9	
Butane	0.8	1.3	0.9	1.6
C_5+ liquid	83.7	88.0	85.5	89.7
C_5 - 490°F	17.6	21.6	13.2	16.3
490 - 1000°F	37.8	39.9	46.0	48.6
>1000°F	28.3	26.5	26.3	24.8
Coke burned	11.4		8.6	
Product properties[1]				
C_5 - 490°F				
°API	40.7		38.0	
Wt. % sulfur	0.17		0.8	
Wt. % nitrogen	0.02		0.02	
490 - 1000°F				
°API	17.0		14.0	
Wt. % sulfur	0.65		4.2	
Wt. % nitrogen	0.15		0.18	
1000°F+ bottoms				
°API	0.6		-2.0	
Wt. % sulfur	1.21		8.2	
Wt. % nitrogen	0.81		1.7	

[1] Based on feed to ART unit. For bitumen, this is 100% of refinery feed. For heavy crude, the 650°F fraction is 64 volume %, or 69 weight %, of refinery feed.

TABLE 12

SEVERE HYDROGENATION PROCESS ESTIMATE

Operating conditions:	Feed	7,500 BPSD bitumen
	LHSV[1]	0.5 hr^{-1} in each (of two) reactor
	Avg. temperature	625°F in R-1; 800°F in R-2
	Total pressure	2800 psig
	Recycle gas rate	6000 SCF/Bbl
	Hydrogen consumed	1,050 SCF/Bbl

Feed type	Bitumen
Feed source	Santa Rosa, New Mexico
Feed °API	8.5
Case study	Z1

Product yields, % feed	wt.	vol.
C_3 & lighter, H_2S	7.0	
C_4+ liquid	94.4	106.2
C_4 - 490°F	14.9	18.3
490 - 1000°F	57.0	65.2
>1000°F	22.5	22.7

Product properties	
C_4 - 490°F	
°API	40.2
Wt. % sulfur	0.03
Wt. % nitrogen	0.04
490 - 1000°F	
°API	28.7
Wt. % sulfur	0.07
Wt. % nitrogen	0.09

[1] Liquid hourly space velocity, in volumes feed per volume catalyst per hour

TABLE 13

NAPHTHA HYDROTREATING PROCESS ESTIMATES

Case study	X1	X2	X6	X3	X4[1]	B1	B2	B3	B4	Y2	Y4	Z1
Upgrader[2]	HVB	HVB	HVB	HVB	HVB	DLC	DLC	DLC	DLC	ART	ART	RHT
Feedstock[3]	SR	KN	KN	PRS	SM	SR	KN	PRS	SM	KN	SM	SR
Naphtha feed properties[4]												
Sp. gr., °API	39.5	45.4	42.1	45.1	46.5	48.4	46.0	46.6	46.4	40.7	48.1	40.2
Sulfur, wt. %	0.32	0.28	0.29	0.11	0.90	1.14	0.66	0.32	1.59	0.17	0.89	0.03
Nitrogen, wt. %	0.04	0.05	0.06	0.18	0.06	0.05	0.07	0.13	0.06	0.02	0.01	0.04
Aromatics, wt. %	26	25	30	35	25	18	28	25	26	39	27	-
Olefins, wt. %	11	11	6	14	4	42	40	41	21	46	16	-
Reactor operating conditions												
Charge rate, BPSD	2,003	2,003	2,692	3,360	21,213	1,995	2,325	2,392	22,298	1,715	18,300	1,372
Avg. temperature, °F	720	720	725	730	740	740	735	735	740	720	735	690
Total pressure, psig	1500	1500	1500	1500	1500	1500	1500	1500	1500	1500	1500	1500
LHSV, hr^{-1}	1.5	1.5	1.5	1.5	1.5	1.3	1.5	1.5	1.0	1.5	1.5	1.5
Catalyst life, months	18	18	17	15	15	15	16	16	13	18	16	24
Material balance												
C_4+ yield, vol. % fresh feed	102.4	102.5	102.5	102.8	103.4	103.3	102.9	102.8	103.7	103.0	103.5	101.9
Hydrogen consumption, SCF/Bbl	850	825	850	950	1,100	1,150	1,000	1,000	1,350	1,150	1,250	550

1 Data also apply to case studies X4A, X4B and X5.

2 Upgrading codes: Hydrovisbreaking (HVB); Delayed Coking (DLC); Asphalt residua treating (ART); Residuum hydrotreating (RHT).

3 Upgrader feedstock codes: Santa Rosa bitumen (SR); Kensyntar bitumen (KN); P. R. Spring bitumen (PRS); 650°F+ from Santa Maria Valley heavy crude (SM).

4 Naphtha boiling range is C_5-490°F for all but Case X6, and C_5-550°F for Case X6.

TABLE 14

GAS OIL HYDROCRACKING PROCESS ESTIMATES

Case study	X1	X2	X6	X3	X4[1]	X4B	B1	B2	B3	B4	Y2	Y4	Z1
Upgrader[2]	HVB	HVB	HVB	HVB	HVB	HVB	DLC	DLC	DLC	DLC	ART	ART	RHT
Feedstock[3]	SR	KN	KN	PRS	SM	SM	SR	KN	PRS	SM	KN	SM	SR
Gas oil feed properties[4]													
Sp. gr., °API	26.1	22.3	20.7	20.5	24.5	24.5	20.9	21.1	19.8	20.3	17.0	18.4	28.7
Sulfur, wt. %	0.87	0.57	0.61	0.39	2.29	2.29	1.53	1.04	0.54	3.82	0.65	3.57	0.07
Nitrogen, wt. %	0.11	0.18	0.20	0.44	0.29	0.29	0.14	0.22	0.45	0.35	0.15	0.15	0.09
Paraffins, vol. %	27	27	28	20	10	10	12	12	17	10	10	8	20
Naphthenes, vol. %	10	10	5	10	28	28	34	30	20	30	10	20	40
Aromatics, vol. %	61	61	64	60	57	57	49	53	58	55	70	60	40
Olefins, vol. %	2	2	3	10	5	5	5	5	15	5	10	12	0
Reactor operating conditions													
Fresh feed rate, BPSD	5,002	4,958	4,268	4,080	24,640	25,916	4,028	4,208	3,892	22,917	2,992	21,003	4,890
Total pressure, psig[5]	1,775	1,775	2,075	1,775	2,075	2,075	1,775	1,775	1,775	2,075	1,775	2,075	1,775
R-1 Avg. temp., °F	730	730	730	730	730	730	730	730	730	740	730	730	720
LHSV, hr^{-1}	0.40	0.40	0.40	0.35	0.30	0.30	0.40	0.40	0.30	0.30	0.40	0.35	0.80
Life, months	9	9	9	6	6	6	8	8	6	6	8	6	12
R-2 Avg. temp., °F	770	760	725	770	720	720	750	750	760	710	760	710	730
LHSV, hr^{-1}	1.2	1.2	1.2	1.2	1.2	1.2	1.2	1.2	1.2	1.2	1.2	1.2	1.2
Life, months	16	16	18	16	20	20	16	16	16	20	16	20	20
Material balance, vol. % FF													
C_3's	3.9	3.6	1.3	3.4	2.9	2.9	3.2	3.0	3.4	2.6	2.9	2.3	2.0
C^4's	23.0	23.6	20.2	25.1	23.7	23.7	29.0	27.9	30.9	32.8	24.8	30.9	21.8
C^5 - 490°F	100.4	103.1	-[6]	102.3	98.1	98.1	98.6	99.7	99.2	92.9	105.4	95.8	100.7
Hydrogen consumption, SCF/Bbl	2,000	2,050	1,950	2,150	2,240	2,240	2,120	2,130	2,330	2,560	2,210	2,480	1,380

1 Data also apply to case study X4A.

2 Upgrading codes: Hydrovisbreaking (HVB); Delayed Coking (DLC); Asphalt residua treating (ART); Residuum hydrotreating (RHT).

3 Upgrader feedstock codes: Santa Rosa bitumen (SR); Kensyntar bitumen (KN); P. R. Spring bitumen (PRS); 650°F$^+$ from Santa Maria Valley heavy crude (SM).

4 Gas oil boiling range is 490-1000°F for all but Case X6, and 550-1000°F for Case X6.

5 Pressure shown is for the first reactor of two reactors in series. Pressure for R-2 is 75 psig lower.

6 For JP-8 operation, product slate is: C_5-290°F naphtha 40.3; 290-550°F cut 60.1; 550°F+ dragstream 5.0.

TABLE 15

GAS OIL HYDROTREATING PROCESS ESTIMATE

Operating conditions:	Feed	25,565 BPSD Santa Maria Valley gas oil blend[1]
	LSVH,[2]	1.0 hr^{-1}
	Avg. temperature	680°F
	Total pressure	1200 psig
	Recycle gas rate	3000 SCF/bbl
	Hydrogen consump	800 SCF/bbl
	Catalyst	Nickel-molybdenum on alumina
Case study		X5
Feed properties	Sp. Gr., °API	21.9
	Boiling range, °F	495-1050
	Sulfur, wt.%	2.35
	Nitrogen, wt.%	0.32

Product yields, % feed	wt.	vol.
C_3 & lighter	2.8	
C_4's	0.2	0.3
C_5-490°F	1.4	1.7
490-650°F	45.4	48.9
650°F+	51.7	52.9

Product properties

Fraction	°API	Weight % Sulfur	Weight % Nitrogen
C_5-490°F	54.5	0.01	0.005
490-650°F	33.6	0.07	0.12
650°F+	25.4	0.29	0.18

[1] Feed is yield proportion blend of 490-650°F straight run gas oil with 490-1000°F cut from hydrovisbreaker.

[2] Liquid hourly space velocity, in volumes feed per volume reactor per hour.

TABLE 16

FLUID CATALYTIC CRACKING PROCESS ESTIMATE

Operating conditions:	Feed	13,525 BPSD 650°F+ hydrotreated Santa Maria Valley blend[1]
	Catalyst	zeolite type
	Catalyst:oil weight ratio	8, by weight
	Conversion level	76 volume %
	Recycle:fresh feed	0.15, by volume
Case study		X5
Feed properties	Sp. Gr., °API	25.4
	Boiling range, °F	650-1050
	Sulfur, wt.%	0.29
	Nitrogen, wt.%	0.18
	Carbon residue, wt.%	0.1

Product yields, % feed	wt.	vol.
C_2 & lighter (as FOE)		4.6
C_3's		11.7
C_4's		14.8
C_5+ gasoline		52.2
Light cycle oil	20.9	19.2
Slurry oil	5.3	4.4
Coke	7.9	-

Product properties	
Gasoline	
(R+M)/2	87.0
Cycle oil	
°API	12.6
Sulfur, wt.%	0.26
Slurry oil	
°API	-0.4
Sulfur, wt.%	0.20

[1] Vacuum gas oil fraction from hydrotreating 490-650°F straight run plus 550-1000°F hydrovisbreaker product (cf. Table 15 for details).

TABLE 17

REFINERY HYDROGEN BALANCE

Case Study	B1	B2	B3	B4	X1	X2	X6	X3	X4	X4A	X4B	X5	Y2	Y4	Z1
Upgrader[1]	DLC	DLC	DLC	DLC	HVB	HVB	HVB	HVB	HVB	HVB	HVB	HVB	ART	ART	RHT
Feedstock[2]	SR	KN	PRS	SM	SR	KN	KN	PRS	SM	SM	SM	SM	KN	SM	SR
Plant Cap., BPSD	7,500	7,500	7,500	50,000	7,500	7,500	7,500	7,500	50,000	50,000	50,000	50,000	7,500	50,000	7,500
Hydrogen consumption SCF/B	1,527	1,597	1,615	1,890	2,465	2,490	2,339	2,601	2,189	2,189	2,250	1,420	1,206	1,580	2,583
Hydrogen Requirement, MSCFD															
Upgrader	-	-	-	-	6,190	6,150	6,150	6,861	26,159	26,159	26,159	26,159	-	-	11,250
Hydrotreater	2,386	2,440	2,520	32,155	1,800	1,750	2,430	3,360	24,405	24,405	24,405	44,865[3]	2,058	23,725	823
Hydrocracker	9,068	9,535	9,590	63,340	10,498	10,763	8,963	9,284	58,910	58,910	61,932	0	6,990	55,255	7,300
Total	11,454	11,975	12,110	95,495	18,488	18,663	17,543	19,505	109,474	109,474	112,496	71,024	9,048	78,980	19,373
Hydrogen Supply															
Utiliz.'n of Gas Plant C_3 & lighter, %	54	72	60	79	98	100	100	93	91	37	42	48	88	84	100
Hydrogen sources, MSCFD															
Gas plant C_3 & lighter															
Contained	1,877	1,044	988	7,110	2,198	1,973	2,163	953	11,690	4,716	12,981	5,748	1,132	6,575	3,950
Via steam reforming	9,577	10,931	11,122	88,385	16,290	16,690	15,380	18,552	97,784	39,758	99,515	65,276	7,916	72,405	12,580
Reformed butane	-	-	-	-	-	-	-	-	-	-	-	-	-	-	2,843
Resid gasification	-	-	-	-	-	-	-	-	-	65,000	-	-	-	-	-
Total	11,454	11,975	12,110	95,495	18,488	18,663	17,543	19,505	109,474	109,474	112,496	71,024	9,048	78,980	19,373

1 Upgrading codes: Hydrovisbreaking (HVB); Delayed Coking (DLC); Asphalt residue treating (ART); Residuum hydrotreating (RHT).

2 Feedstock codes: Santa Rosa bitumen (SR); Kensyntar bitumen (KN); P. R. Spring bitumen (PRS); 650°F+ from Santa Maria Valley heavy crude (SM).

3 Total consists of naphtha hydrotreater (24,405) and FCC feed pretreater (20,460).

TABLE 18

REFINERY FUEL BALANCE

Case Study	B1	B2	B3	B4	X1	X2	X6	X3	X4	X4A	X4B	X5	Y2	Y4	Z1
Refinery Streams Available															
Coke, TPD	274.0	225.9	231.4	975.6	-	-	-	-	-	-	-	-	-	-	-
Gas, FOE BPD[1]	436	210	362	1,150	13	-	-	58	482	2968	442	3,835	60	802	-
Resid, BPD	-	-	-	-	772	726	726	457	4,466		3,190	3,554	1,990	7,900	1,700
Fuel Balance															
Refining Demand, FOE BPD	643	666	662	5,006	857	854	804	880	5,310	3,450	5,428	4,020	350	3,572	880
Allocations, FOE BPD															
Gas	436	210	362	1,150	13	-	-	58	482	2,968	442	3,835	60	802	-
Resid	-	-	-	-	464	469	442	452	2,655	-	2,743	47	174	1,663	880
Cutter Import[2]	-	-	-	-	380	385	362	370	2,173	-	2,243	138[3]	116	1,107	-
Bunker Import	207	456	300	3,856	-	-	-	-	-	482	-		-	-	-
Boiler rate, 10^6 BTU/hr	49.2	36.1	47.0	516	64.1	63.6	76.5	80.1	746	638	762	645	29.7	646	75.5
Fuel Demand, FOE BPD	197	145	188	2,069	257	255	306	320	2,985	2,554	3,049	2,582	119	2592	302
Allocations															
Coke, TPD	44.5	32.6	42.5	467.1	-	-	-	-	-	-	-	-	-	-	-
Resid, BPD	-	-	-	-	141	140	168	5	1,642	-	447	1,237	72	1,551	302
Cutter Import[2]	-	-	-	-	116	115	138	5	1,343	-	365	1,345[4]	47	1,028	-
Bunker Import	-	-	-	-	-	-	-	310	-	2,554	2,237	-	-	-	-
Fuels to Sales															
Coke, TPD	229.5	193.3	188.9	508.5	-	-	-	-	-	-	-	-	-	-	-
Resid, BPD	-	-	-	-	167	117	116	-	169	-	-	2,270	1,744	4,686	518
Fuel Purchases															
Cutter, BPD	-	-	-	-	496	500	500	375	3,516	-	2,608	-	163	2,135	-
Bunker, BPD	207	456	300	3,856	-	-	-	310	-	3,036	2,237	-	-	-	-

1 Represents fuel gas in excess of that required for hydrogen production.
2 Except for Case X5, where cutter is withdrawn from furnace oil pool.
3 Resid blended with FCC slurry oil at 25:75 ratio;
4 Resid blended with either FCC slurry oil at 25:75 ratio, or FCC light cycle oil at 55:45 ratio.

TABLE 19

MATERIAL BALANCE SUMMARY FOR PROCESSING BITUMEN FROM NEW MEXICO

Case study	B1	X1	Z1
Upgrading	Delayed Coking	Hydro-visbreaking	Residuum Hydrotreating
Refining	<	Naphtha hydrotreating plus Distillate hydrocracking	>
Purchases, BPSD			
Crude	7,500	7,500	7,500
Cutter stock	-	496	-
Bunker fuel	207	-	-
Products, BPSD			
JP-4	6,033	7,020	6,335
Butane	1,168	1,140	870
Gasoline/naphtha	-	-	-
No. 2 fuel	-	-	-
Resid	-	167	518
Other, TPD			
Coke	230	-	-
Sulfur	18.0	29.1	28.6
Ammonia	1.2	3.2	4.1
Aviation fuel yield, vol. % crude	80.4	93.6	84.5
Overall thermal efficiency, %	86.6	82.5	82.9

TABLE 20

MATERIAL BALANCE SUMMARY FOR PROCESSING BITUMEN FROM KENTUCKY

Case study	B2	X2	Y1
Upgrading	Delayed Coking	Hydro-visbreaking	ART
Refining	Naphtha hydrotreating plus Distillate hydrocracking		
Purchases, BPSD			
Crude	7,500	7,500	7,500
Cutter stock	-	500	-
Bunker fuel	456	-	-
Products, BPSD			
JP-4	6,587	7,165	4,931
Butane	1,174	1,170	742
Gasoline/naphtha	-	-	-
No. 2 fuel	-	-	-
Resid	-	117	1,744
Other, TPD			
Coke	193	-	-
Sulfur	12.3	21.4	15.3
Ammonia	2.1	5.2	3.9
Aviation fuel yield, vol. % crude	87.8	95.5	66.8
Overall thermal efficiency, %	87.5	84.2	82.1

TABLE 21

MATERIAL BALANCE SUMMARY FOR
PROCESSING KENTUCKY BITUMEN INTO JP-4 OR JP-8

Case study	X2	X6
Upgrading	Hydrovisbreaking	
Refining	Naphtha hydrotreating plus Distillate hydrocracking	
Purchases, BPSD		
Crude	7,500	7,500
Cutter stock	500	500
Bunker fuel	-	-
Products, BPSD	JP-4	JP-8
JP-__	7,165	4,842
Butane	1,170	860
Gasoline/naphtha	-	2,200
No. 2 fuel	-	-
Resid	117	116
Other, TPD		
Coke	-	-
Sulfur	21.4	19.8
Ammonia	5.2	5.2
Aviation fuel yield, vol. % crude	95.5	64.6
Overall thermal efficiency, %	84.2	81.8

TABLE 22

MATERIAL BALANCE SUMMARY FOR PROCESSING BITUMEN FROM UTAH

Case Study	B3	X3
Upgrading	Delayed Coking	Hydro-visbreaking
Refining	Naphtha hydrotreating plus Distillate hydrocracking	
Purchases, BPSD		
Crude	7,500	7,500
Cutter stock	-	375
Bunker fuel	300	310
Products, BPSD		
JP-4	6,320	7,640
Butane	1,203	1,024
Gasoline/naphtha	-	-
No. 2 fuel	-	-
Resid	-	-
Other, TPD		
Coke	189	-
Sulfur	6.5	10.8
Ammonia	4.0	11.6
Aviation fuel yield, vol. % crude	84.3	101.9
Overall thermal efficiency, %	86.4	84.4

TABLE 23

MATERIAL BALANCE SUMMARY FOR
PROCESSING HEAVY CRUDE OIL FROM CALIFORNIA

Case study	B4	X4	Y4
Upgrading	Delayed Coking	Hydro-visbreaking	ART
Refining	Naphtha hydrotreating plus Distillate hydrocracking		
Purchases, BPSD			
Crude	50,000	50,000	50,000
Cutter stock	-	3,516	2,135
Bunker fuel	3,856	-	-
Products, BPSD			
JP-4	45,114	46,106	39,017
Butane	7,517	5,850	6,490
Gasoline/naphtha	-	-	-
No. 2 fuel	-	-	-
Resid	-	169	4,686
Other, TPD			
Coke	508	-	-
Sulfur	307	345	296
Ammonia	17.7	42.2	36.6
Aviation fuel yield, vol. % crude	90.2	92.2	78.0
Overall thermal efficiency, %	82.8	79.3	79.8

TABLE 24

MATERIAL BALANCE SUMMARY FOR

PROCESSING ALTERNATIVES -- HEAVY CRUDE OIL FROM CALIFORNIA

Case study	X4	X5	X4A	X4B
Upgrading	← Hydrovisbreaking →			Severe Hydrovis-breaking
Refining	← Naphtha hydrotreating plus			→
	Hydro-cracking	FCC	Hydro-cracking & POX	Hydro-cracking
Purchases, BPSD				
Crude	50,000	50,000	50,000	50,000
Cutter stock	3,516	-	-	2,608
Bunker fuel	-	-	3,036	2,237
Products, BPSD				
JP-4	46,106	22,374	46,106	47,358
Butane	5,850	2,079	5,850	6,142
Gasoline/naphtha	-	7,060	-	-
No. 2 fuel	-	14,210	-	-
Resid	169	2,270	-	-
Other, TPD				
Coke	-	-	-	-
Sulfur	345	310	385	356
Ammonia	42.2	37.0	42.2	45.0
Aviation fuel yield, vol. % crude	92.2	44.8	92.2	94.7
Overall thermal efficiency, %	79.3	83.4	79.6	79.3

TABLE 25

SUMMARY - UTILITY REQUIREMENTS

Case study	Refinery firing MM BTU/hr	Steam boilers M lb/hr	Electric power KW	Cooling tower water GPM	Boiler feed, condensate M lb/hr
B1	160.8	34.21	4463	1307	38.1
B2	166.4	25.10	4546	1294	38.5
B3	165.6	32.70	4465	1302	38.7
B4	1252	359.2	31054	11750	256.7
X1	214.3	44.58	6130	1600	51.5
X2	213.6	44.21	6114	1600	51.4
X6	200.8	53.50	5751	1527	47.3
X3	220.2	55.73	5975	1892	54.1
X4	1328	519.4	37020	14797	271.7
X4A	862.5	444.1	36185	19760	295.0
X4B	1357	530.6	38127	15183	277.5
X5	1005	448.7	19766	8500	185.5
Y2	87.4	20.61	3500	3924	65.6
Y4	892.6	450.2	33400	19190	330.6
Z1	219.7	52.6	9115	2773	48.6

TABLE 26

ECONOMIC BASES

Capital Investment

Plant Location:	Salt Lake City, Utah
Refinery capacity:	- 7,500 BPSD bitumen, or - 50,000 BPSD heavy oil
Cost base:	3rd quarter 1983
Plant offsites:	- 80% plant onsites (excluding tankage) for the bitumen refinery - 45% plant onsites (excluding tankage) for the heavy oil refinery
Tankage:	- 14 days crude storage capacity - 7 days products storage capacity
Financing:	- 100% equity - three-year plant construction period 25% 1st year 50% 2nd year 25% 3rd year
Investment tax credit:	10% first year

Working Capital

Crude inventory:	- 21 days storage capacity - 14 days inventory
Product inventory:	- 14 days storage capacity - 7 day inventory
Feedstock price:	$25/bbl. (bitumen or heavy oil)
Product prices:	- for revenue purposes, all liquid transportation fuels (gasoline, JP-4, JP-8, DF-2) at equal value as calculated for 15% DCF rate of return. - for working capital estimates, use $65/bbl. for bitumen refinery and $45/bbl. for heavy oil refinery. - fuel gas $25/FOE bbl. - propane $21/bbl. - isobutane $31/bbl. - normal butane $29/bbl. - propylene $33/bbl. - coke $20/short ton - ammonia, anhydrous $110/short ton - sulfur $110/short ton - residual fuel oil $25/bbl. - cutter stock $35.50/bbl.

TABLE 26 (Cont'd)

ECONOMIC BASES

Debt Financing:	15% (including the cost of initial catalyst loading for those units with expected catalyst list of two years or less).
Capital Return	
Discounted cash flow rate:	15%
Plant salvage value:	Zero
Plant depreciation:	5 years accelerated cost recovery system
Operating Basis	
Plant life:	16 years
Plant operating factors:	50% capacity 1st year
Plant on-stream factor:	90% after 1st year
Start-up costs:	10% of fixed capital
Operating Cost Basis	
Process heat:	$25/FOE bbl.
Cooling water:	7¢/1000 gallons
Boiler feed water:	40¢/1000 pounds
Electricity:	5¢/KWHR
Steam:	costed from simple sum of enthalpy over 60°F base @ FOE plus cost of boiler feed water
Operator:[1]	$15/manhour
Helpers:[1]	$14/manhour
Supervision:[1]	25% of direct labor
Overhead:	100% of direct labor
Taxes:	federal and state combined @ 50%
Maintenance, local taxes, and insurance:	4.5% of fixed capital

[1] 4.2 shift positions plus 10% relief required for continuous plant operation.

TABLE 27

COSTS FOR PROCESSING BITUMEN FROM NEW MEXICO

Basis: 7,500 BPSD Refinery

Case study	B1	X1	Z1
Refinery scheme			
Upgrading	Delayed Coking	Hydro-visbreaking	Residuum Hydrotreating
Refining	← Naphtha hydrotreating →		
	← Distillate hydrocracking →		
Other		--	
Plant capital, $MM			
Battery limits	130.8	138.2	158.0
Off-sites	104.6	110.5	126.4
Tankage	14.7	15.9	14.8
Total fixed capital	250.1	264.6	299.2
Working capital	6.3	7.0	9.6
Total capital	256.4	271.6	308.8
Start-up cost (1st year)	25.0	26.5	29.9
Operating costs, $MM/yr.[1]			
Feedstock	61.6	61.6	61.6
Utilities	3.6	8.4	3.8
Labor, supervision, maintenance	7.2	7.8	8.6
Catalyst, chemicals, interest	1.9	2.2	3.7
Total	74.3	80.0	77.7
Fuel costs, $/bbl	70.5	65.5	76.6
¢/gal	1.68	1.56	1.82

[1] Excluding start-up year.

TABLE 28

COSTS FOR PROCESSING BITUMEN FROM KENTUCKY

Basis: 7,500 BPSD Refinery

Case study	B2	X2	Y2
Refinery scheme			
Upgrading	Delayed Coking	Hydro-visbreaking	ART
Refining	←	Naphtha hydrotreating	→
	←	Distillate hydrocracking	→
Other		--	
Plant capital, $MM			
Battery limits	120.4	134.9	114.9
Off-sites	96.3	107.9	91.9
Tankage	15.3	15.9	14.2
Total fixed capital	232.0	258.7	221.0
Working capital	6.6	7.1	7.1
Total capital	238.6	265.8	228.1
Start-up cost (1st year)	23.2	25.9	22.1
Operating costs, $MM/yr.[1]			
Feedstock	61.6	61.6	61.6
Utilities	5.7	8.8	3.6
Labor, supervision, maintenance	6.8	7.6	6.6
Catalyst, chemicals, interest	1.9	2.2	4.7
Total	76.0	80.2	76.5
Fuel costs, $/bbl	63.1	63.6	79.7
¢/gal	1.50	1.51	1.90

[1] Excluding start-up year.

TABLE 29

COST COMPARISON FOR PROCESSING KENTUCKY BITUMEN TO JP-4 OR JP-8

Basis: 7,500 BPSD Refinery

Case study	X2	X6
Refinery scheme		
Upgrading	Hydrovisbreaking	
Refining	Naphtha hydrotreating Distillate hydrocracking	
Other	JP-4 case	JP-8 case
Plant capital, $MM		
Battery limits	134.9	135.5
Off-sites	107.9	108.4
Tankage	15.9	15.3
Total fixed capital	258.7	259.2
Working capital	7.1	7.0
Total capital	265.8	266.2
Start-up cost (1st year)	25.9	25.9
Operating costs, $MM/yr.[1]		
Feedstock	61.6	61.6
Utilities	8.8	8.4
Labor, supervision, maintenance	7.6	7.6
Catalyst, chemicals, interest	2.2	1.8
Total	80.2	79.4
Fuel costs, $/bbl	63.6	66.0
¢/gal	1.51	1.57

[1] Excluding start-up year.

TABLE 30

COSTS FOR PROCESSING BITUMEN FROM UTAH

Basis: 7,500 BPSD Refinery

Case study	B3	X3
Refinery scheme		
Upgrading	Delayed Coking	Hydro-visbreaking
Refining	Naphtha hydrotreating Distillate hydrocracking	
Other	--	
Plant capital, $MM		
Battery limits	116.9	121.1
Off-sites	93.5	96.9
Tankage	15.0	15.9
Total fixed capital	225.4	233.9
Working capital	6.5	7.3
Total capital	231.9	241.2
Start-up cost (1st year)	22.5	23.4
Operating costs, $MM/yr.[1]		
Feedstock	61.6	61.6
Utilities	4.4	9.5
Labor, supervision, maintenance	6.6	7.0
Catalyst, chemicals, interest	2.3	2.4
Total	74.9	80.5
Fuel costs, $/bbl	64.2	57.4
¢/gal	1.53	1.37

[1] Excluding start-up year.

TABLE 31

COSTS FOR PROCESSING HEAVY CRUDE OIL FROM CALIFORNIA

Basis: 50,000 BPSD Refinery

Case study	B4	X4	Y4
Refinery scheme			
Upgrading[1]	Delayed Coking	Hydro-visbreaking	ART
Refining	<--	Naphtha hydrotreating----	>
	<	Distillate hydrocracking	>
Other		--	
Plant capital, $MM			
Battery limits	450.7	457.3	451.8
Off-sites	202.8	205.8	203.3
Tankage	65.8	62.7	63.3
Total fixed capital	719.3	725.8	718.4
Working capital	39.4	39.7	36.7
Total capital	758.7	765.5	755.1
Start-up cost (1st year)	71.9	72.6	71.8
Operating costs, $MM/yr.[2]			
Feedstock	410.6	410.6	410.6
Utilities	45.1	56.8	39.7
Labor, supervision, maintenance	24.0	24.3	24.1
Catalyst, chemicals, interest	14.5	14.8	24.0
Total	494.2	506.5	498.4
Fuel costs, $/bbl	44.6	44.5	49.0
¢/gal	1.06	1.06	1.17

[1] Charge to upgrader is atmospheric crude tower bottoms fraction (>650°F)

[2] Excluding start-up year.

TABLE 32

COST COMPARISON FOR PROCESSING OPTIONS IN CONVERTING CALIFORNIA HEAVY CRUDE OIL

Basis: 50,000 BPSD Refinery

Case study	B4	X4	Y4	X4B
Refinery scheme				
Upgrading[1]	-	Hydrovisbreaking	- -	Severe HVB'G.
Refining	Naphtha HT Distillate HC	Naphtha HT Distillate HC	Naphtha HT Distillate HC	Naphtha HT Distillate HC
Other	-	FCC	POX	-
Plant capital, $MM				
Battery limits	457.3	437.7	500.4	468.0
Off-sites	205.8	197.0	225.2	210.6
Tankage	62.7	59.8	62.1	64.7
Total fixed capital	725.8	694.5	787.7	743.3
Working capital	39.7	33.7	39.0	41.2
Total capital	765.5	728.2	826.7	784.5
1st year start-up cost	72.6	69.5	78.8	74.3
Operating costs, $MM/yr.[2]				
Feedstock	410.6	410.6	410.6	410.6
Utilities	56.9	8.1	40.9	65.2
Labor, supervision, maintenance	24.3	23.4	26.3	24.9
Catalyst, chemicals, interest	14.8	7.8	14.6	15.4
Total	506.6	449.9	492.4	516.1
Fuel costs, $/bbl	44.5	44.5	44.8	44.2
¢/gal	1.06	1.06	1.07	1.05

[1] Charge to upgrader is atmospheric crude tower bottoms fraction (>650°F)
[2] Excluding start-up year.

APPENDIXES

TABLE A

PROPERTIES OF SANTA MARIA VALLEY WHOLE CRUDE

Physical Properties	
API gravity	17.5
Sp. gravity 60/60	0.950
Distillation, °F @ ____%	
IBP	122
5	212
10	279
20	414
30	560
40	709
50	874
EP	1000° @ 58%
Conradson carbon, wt.%	6.8
Chemical analysis, by weight	
Carbon, %	-
Hydrogen, %	-
Nitrogen, %	0.67
Oxygen, %	-
Sulfur, %	4.62
H/C atomic ratio	-
Ash, %	0.03[1]
Nickel, ppm	72[1]
Vanadium, ppm	65[1]
Iron, ppm	79[1]
Hydrocarbon composition	
Saturates	-
Aromatics	-
Polar aromatics	17.5[1]
Asphaltenes	10.0[1]

Source: Reference 7

[1] Values estimated, based on similar California crude oils.

TABLE B-1

ESTIMATED DELAYED COKING DATA FOR PROCESSING SANTA ROSA (NEW MEXICO) BITUMEN

Basis: Commercial coking operation using Sun Tech's delayed coker mathematical model. Data applicable to Case B1.

Coker operating conditions:

Feed	Santa Rosa bitumen, as received
Fresh bitumen feed rate, BPSD	7,500
Steam rate, lbs. per hour	1,267
No. of coker pairs	1
Heater outlet temperature, °F	900
Drum outlet temperature, °F	815
Drum pressure, psig	28.3

Material balance, % feed

Reactants:	Wt. %	Products:	Wt. %	Vol. %
H_2S	-		0.6	-
C_3 & lighter	-		8.0	-
Butane	-		2.6	4.6
C_5+ liquid/API grav.	100/8.5		68.1/29.7	77.9
Coke	-		20.7	-
Total	100		100.0	82.5

Distribution of liquid products, % feed

Boiling range, °F	Wt. %	Vol. %
C_5 - 490	18.8	24.2
490 - 900	49.3	53.7
Total	68.1	77.9

TABLE B-1 (Continued)

ESTIMATED DELAYED COKING DATA FOR PROCESSING

SANTA ROSA (NEW MEXICO) BITUMEN

Inspections and analyses of products

	I-490°F	490-900°F	Coke
Specific gravity @ 60°F	0.786	0.928	-
API gravity @ 60°F	48.4	20.9	-
Sulfur, wt. %	1.14	1.53	3.13
Nitrogen, wt. %	0.05	0.14	1.12
Asphaltenes, %	0	4	-
Aromatics, %	18	45	-
Paraffins, %	-	-	-
Naphthenes, %	-	-	-
Olefins, %	42	-	-
Distillation, °F @ ___ vol. %			
IBP	140	477	-
10	271	575	-
30	332	612	-
50	372	658	-
70	399	727	-
90	441	835	-
FBP	492	903	-

TABLE B-2

ESTIMATED DELAYED COKING DATA FOR PROCESSING KENSYNTAR (KENTUCKY) BITUMEN

Basis: Commercial coking operation using Sun Tech's delayed coker mathematical model. Data applicable to Case B2.

Coker operating conditions:

Feed	Kensyntar bitumen, as received
Fresh bitumen feed rate, BPSD	7,500
Steam rate, lbs. per hour	1,267
No. of coker pairs	1
Heater outlet temperature, °F	900
Drum outlet temperature, °F	815
Drum pressure, psig	28.3

Material balance, % feed

Reactants:	Wt. %	Products:	Wt. %	Vol. %
H_2S	-		0.4	-
C_3 & lighter	-		5.7	-
Butane	-		1.8	3.1
C_5+ liquid/API grav.	100/9.2		75.0/28.9	85.5
Coke	-		17.1	-
Total	100		100.0	88.6

Distribution of liquid products, % feed

Boiling range, °F	Wt. %	Vol. %
C_5 - 490	23.3	29.4
490 - 900	51.7	56.1
Total	75.0	85.5

TABLE B-2 (Continued)

ESTIMATED DELAYED COKING DATA FOR PROCESSING

KENSYNTAR (KENTUCKY) BITUMEN

Inspections and analyses of products

	I-490°F	490-900°F	Coke
Specific Gravity @ 60°F	0.797	0.927	-
API gravity @ 60°F	46.0	21.1	-
Sulfur, wt. %	0.66	1.04	2.68
Nitrogen, wt. %	0.07	0.22	2.28
Asphaltenes, %	0	3	-
Aromatics, %	28	50	-
Paraffins, %	-	-	-
Naphthenes, %	-	-	-
Olefins, %	40	-	-
Distillation, °F @ ___ vol. %			
IBP	150	475	-
10	287	575	-
30	342	612	-
50	380	659	-
70	407	715	-
90	445	832	-
FBP	497	897	-

TABLE B-3

ESTIMATED DELAYED COKING DATA FOR PROCESSING

P. R. SPRING (UTAH) BITUMEN

Basis: Commercial coking operation using Sun Tech's delayed coker mathematical model. Data applicable to Case B3.

Coker operating conditions:

Feed	Utah bitumen, as received
Fresh bitumen feed rate, BPSD	7,500
Steam rate, lbs. per hour	1,267
No. of coker pairs	1
Heater outlet temperature, °F	900
Drum outlet temperature, °F	815
Drum pressure, psig	28.3

Material balance, % feed

Reactants:	Wt. %	Products:	Wt. %	Vol. %
H_2S	-		0.2	-
C_3 & lighter	-		7.4	-
Butane	-		2.3	4.0
C_5+ liquid/API grav.	100/10.3		72.4/28.7	81.8
Coke	-		17.1	-
Total	100		100.0	85.8

Distribution of liquid products, % feed

Boiling range, °F	Wt. %	Vol. %
C_5 - 490	23.8	29.9
490 - 900	48.6	51.9
Total	72.4	81.8

TABLE B-3 (Continued)

ESTIMATED DELAYED COKING DATA FOR PROCESSING

P. R. SPRING (UTAH) BITUMEN

Inspections and analyses of products

	I-490°F	490-900°F	Coke
Specific gravity @ 60°F	0.794	0.935	-
API gravity @ 60°F	46.6	19.8	-
Sulfur, wt. %	0.32	0.54	1.27
Nitrogen, wt. %	0.13	0.45	4.24
Asphaltenes, %	0	4	-
Aromatics, %	25	54	-
Paraffins, %	-	-	-
Naphthenes, %	-	-	-
Olefins, %	41	-	-
Distillation, °F @ ___ vol. %			
IBP	145	487	-
10	265	583	-
30	336	618	-
50	380	666	-
70	408	723	-
90	446	833	-
FBP	502	902	-

TABLE B-4

ESTIMATED DELAYED COKING DATA FOR PROCESSING SANTA MARIA VALLEY (CALIFORNIA) CRUDE

Basis: Commercial coking operation using Sun Tech's delayed coker mathematical model. Data applicable to Case B4. when processing only the 650°F+ bottoms fraction of the whole crude.[1]

Coker operating conditions:

Feed	650°F+ from Santa Maria Valley crude
Fresh feed rate, BPSD	31,900
Steam rate, lbs. per hour	5,390
No. of coker pairs	2
Heater outlet temperature, °F	900
Drum outlet temperature, °F	815
Drum pressure, psig	28.3

Material balance, % Feed

Reactants:	Wt. %	Products:	Wt. %	Vol. %
H_2S	-		1.6	-
C_3 & lighter	-		5.6	-
Butane	-		2.1	3.9
C_5+ liquid/API grav.	100/6.2		73.7/27.0	85.0
Coke	-		17.0	-
Total	100		100.0	88.9

Distribution of liquid products, % feed

Boiling range, °F	Wt. %	Vol. %
C_5 - 490	23.7	30.4
490 - 900	50.0	54.6
Total	73.7	85.0

[1] 650°F+ bottoms fraction represents 63.8 volume %, or 69.0 weight %, of the whole crude.

TABLE B-4 (Continued)

ESTIMATED DELAYED COKING DATA FOR PROCESSING

SANTA MARIA VALLEY (CALIFORNIA) CRUDE

Inspections and analyses of products

	I-490°F	490-900°F	Coke
Specific gravity @ 60°F	0.803	0.943	-
API gravity @ 60°F	44.7	18.5	-
Sulfur, wt. %	2.54	4.22	10.64
Nitrogen, wt. %	0.12	0.42	4.19
Asphaltenes, %	-	-	-
Aromatics, %	34	60	-
Paraffins, %	-	-	-
Naphthenes, %	-	-	-
Olefins, %	41	-	-
Distillation, °F @ ___ vol. %			
IBP	142	510	-
10	265	576	-
30	315	613	-
50	363	661	-
70	395	719	-
90	428	804	-
FBP	497	903	-

TABLE C-1

ESTIMATED HYDROVISBREAKING DATA FOR PROCESSING

SANTA ROSA (NEW MEXICO) BITUMEN

Basis: Unpublished laboratory and pilot plant studies, to achieve ~ 10 volume % 1000°F+ residue in product. Data applicable to Case XI.

Reactor operating conditions:

Feed	Santa Rosa bitumen, as received
Fresh feed rate, BPSD	7,500
Average temperature, °F	825
Liquid hourly space vel., v/hr/v	0.73
Average residence time, hrs.	1.37
Total pressure, psig	2,500
Recycle gas rate, SCF/bbl	5,000
Hydrogen consumption, SCF/bbl	825

Material balance, % feed

Reactants:	Wt. %	Products:	Wt. %	Vol. %
H_2	1.2		-	-
H_2S	-		1.2	-
NH_3	-		0.1	
H_2O			0.4	-
C_3 & lighter	-		5.2	-
C_4+ liquid/API grav.	100.0/8.5		94.3/22.5	103.7
Total	101.2		101.2	103.7

Distribution of liquid products, % feed

Boiling range, °F	Wt. %	Vol. %
C_4 - 490	22.1	26.7
490 - 1000	59.9	66.7
1000°F+	12.3	10.3
Total	94.3	103.7

TABLE C-1 (Continued)

ESTIMATED HYDROVISBREAKING DATA FOR PROCESSING

SANTA ROSA (NEW MEXICO) BITUMEN

Inspections and analyses of products

	C_4+ product	I-490°F	490-1000°F	1000°F+
Specific gravity @ 60°F	0.919	0.828	0.898	>1.20
API gravity @ 60°F	22.5	39.5	26.1	<-10
Sulfur, wt. %	1.06	0.32	0.87	3.33
Nitrogen, wt. %	0.19	0.04	0.11	0.88
Carbon residue, wt. %	5.3	-	-	-
Asphaltenes, %	9.9	-	-	80
Aromatics, %	-	26	61	-
Paraffins, %	-	44	27	-
Naphthenes, %	-	19	10	-
Olefins, %	-	11	2	-
Distillation, °F @ ___ vol. %				
IBP	150	135	500	
10	349	270	559	
30	493	333	620	
50	617	374	691	
70	752	413	761	
90	1000	456	871	
FBP	-	488	-	

TABLE C-2

ESTIMATED HYDROVISBREAKING DATA FOR PROCESSING

KENSYNTAR (KENTUCKY) BITUMEN

Basis: Unpublished laboratory and pilot plant studies, to achieve ~ 10 volume % 1000°F+ residue in product. Data applicable to Cases X2 and X6.

Reactor operating conditions:

Feed	Kensyntar bitumen, as received
Fresh feed rate, BPSD	7,500
Average temperature, °F	825
Liquid hourly space vel., v/hr/v	0.83
Average residence time, hrs.	1.21
Total pressure, psig	2,500
Recycle gas rate, SCF/bbl	5,000
Hydrogen consumption, SCF/bbl	820

Material balance, % feed

Reactants:	Wt. %	Products:	Wt. %	Vol. %
H_2	1.2		-	-
H_2S	-		0.9	-
NH_3	-		0.2	
H_2O			1.1	-
C_3 & lighter	-		5.2	-
C_4+ liquid/API grav.	100.0/9.2		93.8/23.1	102.5
Total	101.2		101.2	102.5

Distribution of liquid products, % feed

Boiling range, °F	Wt. %	Vol. %
C_4 - 490	21.4	26.7
490 - 1000	60.8	66.1
1000°F+	11.6	9.7
Total	93.8	102.5

TABLE C-2 (Continued)

ESTIMATED HYDROVISBREAKING DATA FOR PROCESSING

KENSYNTAR (KENTUCKY) BITUMEN

Inspections and analyses of products

	C_4+ product	I-490°F	490-1000°F	1000°F+
Specific gravity @ 60°F	0.915	0.800	0.920	>1.20
API gravity @ 60°F	23.1	45.4	22.3	<-10
Sulfur, wt. %	0.76	0.28	0.57	3.00
Nitrogen, wt. %	0.33	0.19	0.18	1.79
Carbon residue, wt. %	6.8	-	-	-
Asphaltenes, %	9.3	-	-	75
Aromatics, %	-	25	61	-
Paraffins, %	-	44	27	-
Naphthenes, %	-	20	10	-
Olefins, %	-	11	2	-
Distillation, °F @ ___ vol. %				
IBP	150	140	500	
10	332	249	585	
30	472	291	659	
50	595	335	725	
70	729	371	796	
90	979	436	891	
FBP	1060	485	-	

TABLE C-3

ESTIMATED HYDROVISBREAKING DATA FOR PROCESSING

P. R. SPRING (UTAH) BITUMEN

Basis: Unpublished laboratory and pilot plant studies, to achieve ~ 10 volume % 1000°F+ residue in product. Data applicable to Case X3.

Reactor operating conditions:

Feed	Utah bitumen, as received
Fresh feed rate, BPSD	7,500
Average temperature, °F	825
Liquid hourly space vel., v/hr/v	0.62
Average residence time, hrs.	1.62
Total pressure, psig	2,500
Recycle gas rate, SCF/bbl	5,000
Hydrogen consumption, SCF/bbl	915

Material balance, % feed

Reactants:	Wt. %	Products:	Wt. %	Vol. %
H_2	1.4		-	-
H_2S	-		0.5	-
NH_3	-		0.5	
H_2O			0.6	-
C_3 & lighter	-		5.9	-
C_4+ liquid/API grav.	100.0/10.3		93.9/27.0	105.3
Total	101.4		101.4	105.3

Distribution of liquid products, % feed

Boiling range, °F	Wt. %	Vol. %
C_4 - 490	35.9	44.8
490 - 1000	50.7	54.4
1000°F+	7.3	6.1
Total	93.9	105.3

TABLE C-3 (Continued)

ESTIMATED HYDROVISBREAKING DATA FOR PROCESSING

P. R. SPRING (UTAH) BITUMEN

Inspections and analyses of Products

	C_4+ product	I-490°F	490-1000°F	1000°F+
Specific gravity @ 60°F	0.893	0.801	0.931	>1.20
API gravity @ 60°F	27.0	45.1	20.5	<-10
Sulfur, wt. %	0.32	0.11	0.39	0.86
Nitrogen, wt. %	0.60	0.18	0.44	3.71
Carbon residue, wt. %	5.0	-	-	-
Asphaltenes, %	5.5	-	-	70
Aromatics, %	-	35	60	-
Paraffins, %	-	25	20	-
Naphthenes, %	-	26	10	-
Olefins, %	-	14	10	-
Distillation, °F @ ___ vol. %				
IBP	130	125	500	
10	286	235	620	
30	420	274	694	
50	531	316	762	
70	648	349	832	
90	868	414	906	
FBP	1000	480	-	

TABLE C-4

ESTIMATED HYDROVISBREAKING DATA FOR PROCESSING SANTA MARIA VALLEY (CALIFORNIA) CRUDE

Basis: Unpublished laboratory and pilot plant studies, to achieve ~ 15 volume % 1000°F+ residue in product. Data applicable to Cases X4 and X4A, when processing only the 650°F+ bottoms fraction of the whole crude.[1]

Reactor operating conditions:

Feed	650°F+ from Santa Maria Valley crude
Fresh feed rate, BPSD	31,900
Average temperature, °F	825
Liquid hourly space vel., v/hr/v	0.82
Average residence time, hrs.	1.22
Total pressure, psig	2,500
Recycle gas rate, SCF/bbl	5,000
Hydrogen consumption, SCF/bbl	820

Material balance, % feed

Reactants:	Wt. %	Products:	Wt. %	Vol. %
H_2	1.2		-	-
H_2S	-		3.7	-
NH_3	-		0.4	
H_2O			-	-
C_3 & lighter	-		5.1	-
C_4+ liquid/API grav.	100.0/6.2		92.0/19.7	101.0
Total	101.2		101.2	101.0

Distribution of liquid products, % feed

Boiling range, °F	Wt. %	Vol. %
C_4 - 490	21.6	27.0
490 - 1000	54.6	60.0
1000°F+	15.8	14.0
Total	92.0	101.0

[1] 650°F+ bottoms fraction represents 63.8 volume %, or 69.0 weight %, of whole crude.

TABLE C-4 (Continued)

ESTIMATED HYDROVISBREAKING DATA FOR PROCESSING

SANTA MARIA VALLEY (CALIFORNIA) CRUDE

Inspections and analyses of products

	C_4+ product	I-490°F	490-1000°F	1000°F+
Specific gravity @ 60°F	0.936	0.822	0.910	1.125
API gravity @ 60°F	19.7	40.7	24.0	-5.7
Sulfur, wt. %	2.78	0.83	2.23	7.17
Nitrogen, wt. %	0.62	0.13	0.34	2.24
Carbon residue, wt. %	4.2	-	-	-
Asphaltenes, %	7.1	-	-	41
Aromatics, %	-	30	60	-
Paraffins, %	-	30	10	-
Naphthenes, %	-	30	25	-
Olefins, %	-	10	5	-
Distillation, °F @ ___ vol. %				
IBP	150	135	500	
10	365	265	568	
30	512	327	630	
50	637	364	699	
70	784	404	769	
90	1055	449	873	
FBP	-	485	-	

TABLE C-5

ESTIMATED HYDROVISBREAKING DATA FOR PROCESSING

SANTA MARIA VALLEY (CALIFORNIA) CRUDE

Basis: Unpublished laboratory and pilot plant studies, to achieve ~ 10 volume % 1000°F+ residue in product. Data applicable to case X4B, when processing only the 650°F+ bottoms fraction of the whole crude.[1]

Reactor operating conditions:

Feed	650°F+ from Santa Maria Valley crude
Fresh feed rate, BPSD	31,900
Average temperature, °F	825
Liquid hourly space vel., v/hr/v	0.82
Average residence time, hrs.	1.22
Total pressure, psig	2,500
Recycle gas rate, SCF/B charge	5,000
Hydrogen consumption	820

Material balance, % feed

Reactants:	Wt. %	Products:	Wt. %	Vol. %
H_2	1.2		-	-
H_2S	-		3.7	-
NH_3	-		0.4	
H_2O			-	-
C_3 & lighter	-		5.1	-
C_4+ liquid/API grav.	100.0/6.2		92.0/19.7	101.0
Total	101.2		101.2	101.0

Distribution of liquid products, % feed

Boiling range, °F	Wt. %	Vol. %
C_4 - 490	21.6	27.0
490 - 1000	59.0	60.0
1000°F+	11.4	14.0
Total	92.0	101.0

[1] 650°F+ bottoms fraction represents 63.8 volume %, or 69.0 weight %, of whole crude.

TABLE C-5 (Continued)

ESTIMATED HYDROVISBREAKING DATA FOR PROCESSING

SANTA MARIA VALLEY (CALIFORNIA) CRUDE

Inspections and analyses of products

	C_4+ product	I-490°F	490-1000°F	1000°F+
Specific gravity @ 60°F	0.936	0.822	0.910	1.125
API gravity @ 60°F	19.7	40.7	24.0	-5.7
Sulfur, wt. %	2.78	0.83	2.23	7.17
Nitrogen, wt. %	0.62	0.13	0.34	2.24
Carbon residue, wt. %	4.2	-	-	-
Asphaltenes, %	7.1	-	-	41
Aromatics, %	-	30	60	-
Paraffins, %	-	30	10	-
Naphthenes, %	-	30	25	-
Olefins, %	-	10	5	-
Distillation, °F @ ___ vol. %				
IBP	150	135	500	
10	365	265	568	
30	512	327	630	
50	637	364	699	
70	784	404	769	
90	1055	449	873	
FBP	-	485	-	

TABLE C-6

ESTIMATED HYDROVISBREAKING DATA FOR PROCESSING

SANTA MARIA VALLEY (CALIFORNIA) CRUDE

Basis: Unpublished laboratory and pilot plant studies, to achieve ~ 10 volume % 1050°F+ residue in product. Data applicable to Cases X5, when processing only the 650 F+ bottoms fraction of the whole crude.[1]

Reactor operating conditions:

Feed	650°F+ from Santa Maria Valley crude
Fresh feed rate, BPSD	31,900
Average temperature, °F	825
Liquid hourly space vel., v/hr/v	0.82
Average residence time, hrs.	1.22
Total pressure, psig	2,500
Recycle gas rate, SCF/bbl	5,000
Hydrogen consumption, SCF/bbl	820

Material Balance, % feed

Reactants:	Wt. %	Products:	Wt. %	Vol. %
H_2	1.2		-	-
H_2S	-		3.7	-
NH_3	-		0.4	
H_2O			-	-
C_3 & lighter	-		5.1	-
C_4+ liquid/API grav.	100.0/6.2		92.0/19.7	101.0
Total	101.2		101.2	101.0

Distribution of liquid products, % feed

Boiling range, °F	Wt. %	Vol. %
C_4 - 490	21.6	27.0
490 - 1050	57.9	62.9
1050°F+	12.5	11.1
Total	92.0	101.0

[1] 650°F+ bottoms fraction represents 63.8 volume %, or 69.0 weight %, of whole crude.

TABLE C-6 (Continued)

ESTIMATED HYDROVISBREAKING DATA FOR PROCESSING

SANTA MARIA VALLEY (CALIFORNIA) CRUDE

Inspections and analyses of products

	C_4+ product	I-490°F	490-1050°F	1050°F+
Specific gravity @ 60°F	0.936	0.822	0.930	1.131
API gravity @ 60°F	19.7	40.7	20.7	-6.4
Sulfur, wt. %	2.78	0.83	2.31	8.49
Nitrogen, wt. %	0.62	0.13	0.38	2.61
Carbon residue, wt. %	4.2	-	-	-
Asphaltenes, %	7.1	-	-	52
Aromatics, %	-	30	61	-
Paraffins, %	-	30	10	-
Naphthenes, %	-	30	25	-
Olefins, %	-	10	4	-
Distillation, °F @ ___ vol. %				
IBP	150	135	500	
10	365	265	577	
30	512	327	643	
50	637	364	708	
70	784	404	783	
90	1055	449	915	
FBP	-	485	992	

TABLE D-1

ESTIMATED ASPHALT RESIDUAL TREATING (ART) DATA FOR PROCESSING KENSYNTAR (KENTUCKY) BITUMEN

Basis: Vendor-supplied estimates. Data applicable to Case Y2.

Reactor operating conditions:

Feed	Kensyntar bitumen, as received
Fresh feed rate, BPSD	7,500
ARTCAT™ consumption, #/bbl feed	3.30
Flue gas, mol. % dry basis	17.8 CO_2, 1.0 O_2, 0.3 SOx

Material balance, % feed

Reactants:	Wt. %	Products:	Wt. %	Vol. %
H_2S			0.4	-
C_2 & lighter	-		2.4	-
C_3's	-		1.3	2.5
C_4's			0.8	1.3
C_5+ liquid/API grav.	100/9.2		83.7/16.4	88.0
Coke burned	-		11.4	-
Total	100.2		100.0	91.8

Distribution of liquid products, % feed

Boiling range, °F	Wt. %	Vol. %
C_5 - 490	17.6	21.6
490 - 1000	37.8	39.9
1000+	28.3	26.5
Total	83.7	88.0

TABLE D-1 (Continued)

ESTIMATED ASPHALT RESIDUA TREATING (ART) DATA FOR PORCESSING

KENSYNTAR (KENTUCKY) BITUMEN

Inspections and analyses of products

	Cs - 490°F	490-1000°F	1000°F+
Specific gravity @ 60°F	0.822	0.953	1.071
API gravity @ 60°F	40.7	17.0	0.6
Sulfur, wt. %	0.17	0.65	1.21
Nitrogen, wt. %	0.02	0.15	0.81
Carbon residue, wt. %	-	0.7	14.3
Other	-	-[2]	-[2]
Aromatics, %	39	-	-
Paraffins, %	-	-	-
Naphthenes, %	-	-	-
Olefins, %	46	-	-
Distillation, °F @ ___ vol. %			
IBP	154	554	
10	184	588	
30	253	677	
50	313	760	
70	372	841	
90	423	918	
FBP	448	954	

[2] Ni + V in the 650°F product is 20 ppmw

TABLE D-2

ESTIMATED ASPHALT RESIDUAL TREATING (ART) DATA FOR PROCESSING SANTA MARIA VALLEY (CALIFORNIA) CRUDE

Basis: Vendor-supplied estimates. Data applicable to Case Y4 when processing only the 650°F+ bottoms fraction of the whole crude.[1]

Reactor operating conditions:

Feed	650°F+ from Santa Maria Valley crude
Fresh feed rate, BPSD	31,900
ARTCAT™ consumption, #/bbl feed	2.96
Flue gas, mol. % dry basis	16.5 CO_2, 1.0 O_2, 1.4 SOx

Material balance, % feed

Reactants:	Wt. %	Products:	Wt. %	Vol. %
H_2S			0.5	-
C_2 & lighter	-		2.9	-
C_3's	-		1.5	3.5
C_4's			0.9	1.6
C_5+ liquid/API grav.	100/6.2		85.6/12.8	89.7
Coke burned	-		8.6	-
Total	100.0		100.0	94.8

Distribution of liquid products, % feed

Boiling range, °F	Wt. %	Vol. %
C_5 - 490	13.2	16.3
490 - 650	8.2	9.0
650 - 1000	37.8	39.6
1000+	26.4	24.8
Total	85.6	89.7

[1] 650°F+ bottoms fraction represents 63.8 volume %, or 69.0 weight %, of whole crude.

TABLE D-2 (Continued)

ESTIMATED ASPHALT RESIDUA TREATING (ART) DATA FOR PROCESSING

SANTA MARIA VALLEY (CALIFORNIA) CRUDE

Inspections and analyses of products

	C_5 - 490°F	490-650°F	650-1000°F	1000°F+
Specific gravity @ 60°F	0.835	0.932	0.982	1.093
API gravity @ 60°F	38.0	20.4	12.6	-2.0
Sulfur, wt. %	0.8	2.1	4.6	8.2
Nitrogen, wt. %	0.02	0.08	0.2	1.7
Carbon residue, wt. %	-	0.1	1.0	8.3
Other	-	-	-[2]	-[2]
Aromatics, %	39	-	-	-
Paraffins, %	-	-	-	-
Naphthenes, %	-	-	-	-
Olefins, %	46	-	-	-
Distillation, °F @ ___ vol. %				
IBP	151	515	723	
10	173	521	759	
30	231	539	830	
50	294	558	876	
70	360	578	915	
90	420	598	947	
FBP	446	612	969	

[2] Ni + V in the 650°F+ product is 20 ppmw

TABLE E

ESTIMATED SEVERE HYDROGENATION DATA FOR PROCESSING SANTA ROSA (NEW MEXICO) BITUMEN

Basis: Published and unpublished laboratory and pilot plant studies, to achieve ~ 50 volume % conversion of the 1000°F+ fraction in the feed. Data applicable to case Z1.

Reactor operating conditions:

Feed	Santa Rosa bitumen, as received
Fresh feed rate, BPSD	7,500
Average temperature, °F	625 in R-1; 800 in R-2
Liquid hourly space vel., v/hr/v	0.5 in each (of two) reactor
Total pressure, psig	2,800
Recycle gas rate, SCF/bbl	6,000
Hydrogen consumption, SCF/bbl	1,050

Material balance, % feed

Reactants:	Wt. %	Products:	Wt. %	Vol. %
H_2	1.6		-	-
H_2S	-		2.2	-
NH_3	-		0.2	
H_2O			0.7	-
C_3 & lighter	-		3.9	-
C_4+ liquid/API grav.	100.0/8.5		94.4/26.0	106.2
Total	101.6		101.6	106.2

Distribution of liquid products, % feed

Boiling range, °F	Wt. %	Vol. %
C_4 - 490	14.9	18.3
490 - 1000	57.0	65.2
1000°F+	22.5	22.7
Total	94.4	106.2

TABLE E (Continued)

ESTIMATED SEVERE HYDROGENATION DATA FOR PROCESSING

SANTA ROSA (NEW MEXICO) BITUMEN

Inspections and analyses of products

	C_4+ product	I-490°F	490-1000°F	1000°F+
Specific gravity @ 60°F	0.900	0.824	0.883	1.002
API gravity @ 60°F	26.0	40.2	28.7	9.7
Sulfur, wt. %	0.11	0.03	0.07	0.25
Nitrogen, wt. %	0.11	0.04	0.09	0.19
Distillation, °F @ ___ vol. %				
IBP	-	82	473	-
10	-	273	520	-
30	-	322	584	-
50	-	354	672	-
70	-	410	707	-
90	-	451	807	-
FBP	-	490	1000	-

TABLE F

DISTRIBUTION OF BATTERY LIMITS

CAPITAL INVESTMENT

Case study	B1	B2	B3	B4	X1	X2	X6	X3	X4	X4A	X4B	X5	Y2	Y4	Z1
Refinery Scheme															
Feed[1]	SR	KN	PRS	SM	SR	KN	KN	PRS	SM	SM	SM	SM	KN	SM	SR
Capacity, BPSD	7,500	7,500	7,500	50,000	7,500	7,500	7,500	7,500	50,000	50,000	50,000	50,000	7,500	50,000	7,500
Process															
Upgrading[2]	DLC	DLC	DLC	DLC	HVB	HVB	HVB	HVB	HVB	HVB	HVB	HVB	ART	ART	RHT
Refining[3]	NHT	NHT	NHT	NHT	NHT	NHT	NHT	NHT	NHT	NHT	NHT	NHT	NHT	NHT	NHT
	DHC	DHC	DHC	DHC	DHC	DHC	DHC	DHC	DHC	DHC	DHC	DHT	DHC	DHC	DHC
Other							JP-8			POX		FCC			
Capital investment, $MM															
Crude tower	-	-	-	17.5	-	-	-	-	17.5	17.6	17.6	17.6	-	17.6	-
Upgrader	41.0	41.0	41.0	70.2	32.8	32.8	32.8	32.8	70.2	70.2	70.2	70.2	38.6	77.2	72.5
Refiners															
Naphtha HT	15.8	12.2	12.5	83.1	15.8	15.8	19.0	15.2	79.6	79.6	79.6	79.6	10.2	73.7	8.8
Distillate HT	-	-	-	-	-	-	-	-	-	-	-	70.2	-	-	-
Distillate HC	31.0	28.1	25.8	91.5	35.1	35.1	27.6	26.9	94.2	94.2	97.1	-	22.2	87.5	31.6
Fluid cat cracker	-	-	-	-	-	-	-	-	-	-	-	37.5	-	-	
Auxiliaries															
Gas plant	9.6	8.2	9.4	32.4	9.8	9.8	7.3	10.5	35.4	35.4	35.9	31.8	5.8	24.2	9.0
Hydrogen plant	14.0	14.3	14.4	50.1	19.0	19.0	18.1	19.9	54.4	31.7	55.3	42.0	12.1	44.5	19.2
Flue gas desulf.	7.0	6.8	6.6	41.0	9.6	9.1	17.4	6.8	35.4	21.5	41.2	19.1	17.6	77.9	-
Sulfur plant	12.4	9.8	7.2	64.9	16.1	13.3	13.3	9.0	70.6	70.6	71.1	69.7	8.4	49.2	16.9
Resid gasifier	-	-	-	-	-	-	-	-	-	79.6	-	-	-	-	-
TOTAL, battery limits capital	130.8	120.4	116.9	450.7	138.2	134.9	135.5	121.1	457.3	500.4	468.0	437.7	114.9	451.8	158.0

[1] Feedstock codes: Santa Rosa bitumen (SR); Kensyntar bitumen (KN); P. R. Spring bitumen (PRS); 650°F+ from Santa Maria Valley heavy crude (SM).

[2] Upgrading codes: Hydrovisbreaking (HVB); Delayed Coking (DLC); Asphalt residua treating (ART); Residuum hydrotreating (RHT).

[3] Refining codes: Naphtha hydrotreating (NHT); distillate hydrocracking (DHC); distillate hydrotreating (DHT).

REFERENCES

1. Anon.; Monthly Statistical Report Vol. 8, No. 2, American Petroleum Institute, Washington, D.C., February 1984.

2. Anon.; "Predicting Long-Term Oil Demand", Petroleum Economist, July 1983, pp. 254-255.

3. F. E. Wiering, Jr.; "Oil Imports Turn Upward", Petroleum Economist, March 1984, pp. 104-107.

4. R. F. Meyer, V. A. Kuuskraa, and E. Hammershaimb; "World Resources of Heavy Oil and Tar Sands", Symposium papers Synthetic Fuels from Oil Shale and Tar Sands (Louisville, Kentucky, 17-19 May, 1983); sponsored by Institute of Gas Technology, Chicago, Illinois.

5. E. M. Piper, A. W. Riddell, and R. H. Trent An Evaluation of Heavy Oil Mining, DOE/PC/30259-1, Energy Development Consultants/Stone & Webster Engineering Corp., Golden, Colorado, March 1983.

6. Energy Information Administration, Annual Energy Review 1983, DOE/EIA-0384(83) U. S. Department of Energy, Washington, D.C., April, 1984.

7. H. J. Coleman, E. M. Snelton, D. T. Nichols and C. J. Thompson, Analyses of 800 Crude Oils from United States Oilfields; BETC/RI-78/14 Bartlesville Energy Technology Center, U. S. Department of Energy, Bartlesville, Oklahoma, November 1978,

8. L. C. Marchant and R. E. Terry, "U. S. Tar Sand Oil Recovery Projects", Symposium papers Synthetic Fuels from Oil Shale and Tar Sands (Louisville, Kentucky, 17-19 May, 1983); sponsored by Institute of Gas Technology, Chicago, Illinois.

9. American Petroleum Institute, Basic Petroleum Data Book Vol. IV No. 1, January 1984, American Petroleum Institute, Washington, D.C.

10. B. S. Resnick and R. D. Metz, Evaluation of Tar Sand Mining Volume II A Technical and Cost Evaluation of Tar Sand Mining Systems DOE/PC/30201-2, Ketron, Inc. Wayne, Pennsylvania, April 1983.

11. G. L. Baughman, Editor; Synthetic Fuels Data Handbook, second edition, Cameron Engineers, Inc. Denver, Colorado, 1978.

GLOSSARY OF TERMS

API gravity	an arbitrary specific gravity scale, applied to petroleum crudes and products, defined as: $°API = (141.5/\text{specific gravity @ } 60°F) - 131.5$
barrel	for petroleum usage, 42 U.S. liquid gallons.
bitumen	a naturally-occurring hydrocarbon which is too viscous to flow at the reservoir conditions.
bunker fuel	a high viscosity fuel oil derived from a residual material. It may be blended with a distillate fraction to achieve a desired viscosity.
carbon residue	the proportion, in weight percent, of a petroleum-derived liquid which remains after evaporation and pyrolysis.
centipoise	a measure of the dynamic viscosity, or resistive flow, of a fluid. One poise (P) equals one dyne-second per centimeter squared.
cutter (stock)	a fuel oil blending component used to reduce viscosity of a residual fuel to a desired level.
cycle oil	a portion of fluid catalytic cracking effluent which is higher boiling than the gasoline or naphtha fraction.
extraction	removal of heavy oil or bitumen from the reservoir or deposit; for mined tar sands, also includes separation of bitumen from mineral.
fuel oil equivalent	used to define quantity of fuel gas in terms of heating value of fuel oil, which is 6.05 million BTU's per barrel.
gas oil	a petroleum distillate fraction; for this study, refers to material higher boiling than (heavy) naphtha but excludes vacuum residue.
gasifier	a facility for the high temperature conversion of carbonaceous feeds (coal, residua) to synthesis gas by contact with steam plus air or oxygen. Oxygen supply is restricted so complete oxidation to carbon dioxide does not occur.

heavy crude oil	crude oil which has a specific gravity less than 20° API and is mobile at reservoir conditions.
heteroatoms	used to denote atoms other than carbon and hydrogen contained in organic compounds or structures, usually organic; applied principally to sulfur, nitrogen and oxygen atoms.
in-situ	in place; in this context, within the crude oil reservoir or tar sand deposit.
JP-4	wide cut, gasoline type aviation turbine fuel defined by specification MIL-T-5624L.
JP-8	kerosene type aviation turbine fuel defined by specification MIL-T-83133A.
naphtha	a distillate fraction the boiling range of which falls between those of pentane and gas oil.
overburden	that part of the earth's surface which overlays a deposit of mineral or fossil resource.
partial oxidation	see gasifier
refining	in this study, refers to the secondary processing steps which follow upgrading, to produce marketable products from refinery intermediates.
reserves	the amount of fossil hydrocarbon contained within a deposit that is calculated or estimated to be recoverable.
residue	synonymous with resid, residua, residuum; the higher boiling portion of a crude or intermediate which is not distillable without degradation; a long resid refers to tower bottoms from distillation at atmospheric pressure; a short resid, to bottoms from vacuum distillation.
resource	the total amount of fossil hydrocarbon contained within a deposit, without regard to recoverability.

GLOSSARY OF TERMS (Concluded)

Saybolt Furol Seconds	the units employed in a non-fundamental system for expressing the flow characteristics of a high viscosity petroleum product such as a blended bunker fuel oil.
slurry oil	a highly aromatic heavy fraction produced during fluid catalytic cracking; provides a means for returning catalyst slurry to cracking zone when catalyst disengagement is insufficient; recycle to extinction generally undesirable so it is used in heavy fuel blending; also known as decant oil.
space velocity	an expression of reaction severity, referring to volume of reactant(s) per volume of reactor volume per unit time; usual units are reciprocal hours (hr^{-1}).
specific gravity	mass per unit volume of a material, compared to that of a reference material (often water) at standard conditions (e.g. 60°F).
steam reforming	a catalytic process for the steam decomposition of light hydrocarbons into raw synthesis gas.
straight run	refers to a distillate fraction obtained from a crude oil not previously exposed to conditions which would produce appreciable change in chemical structure.
syntnetic crude	a wide boiling range product stream that has been subjected to conditions which brought about an appreciable change in the original cnemical structure, in one or a combination of processing steps; also referred to as "syncrude".
tar sands	deposits of mineral, whether consolidated (rock-like) or unconsolidated (sand-like), which have intimately associated with them a significant amount of bitumen.
tower bottoms	the bottom fraction produced from a distillation column; depending on its boiling range, it may or may not be non-distillable, i.e. a residuum.
upgrading	in this study, refers to the primary conversion step in a sequence of processing steps for converting very low quality feedstocks to marketable products; generally excludes those operations which do not result in an appreciable change in chemical structure, such as fractionation, desalting.

LIST OF SYMBOLS AND ABBREVIATIONS

Symbols

$650°F^+$	above 650°F (as in a fraction boiling above 650°F)
NH_3	ammonia
CO_2	carbon dioxide
¢	cents
°API	degrees API
°F	degrees Fahrenheit
$	dollars
> 1000°F	exceeds 1000°F (as in a fraction boiling greater than 1000°F)
C_3	hydrocarbons containing three carbon atoms
C_4	hydrocarbons containing four carbon atoms
C_5	hydrocarbons containing five carbon atoms
H_2	hydrogen
H_2S	hydrogen sulfide
H/C	hydrogen to carbon ratio
%	percent
#	pounds
R-1	reactor number one
R-2	reactor number two
hr^{-1}	reciprocal hours (i.e. 1/hours)
SO_2	sulfur dioxide
v/hr/v	volumes per hour per volume, as in space velocity

Abbreviations

API	American Petroleum Institute
ART	Asphalt Residual Treating process
bbl	barrel
BPD	barrels per day

LIST OF SYMBOLS AND ABBREVIATIONS (Concluded)

BPSD	barrels per stream day
B-O-B	bottom-of-barrel
BTU	British thermal unit
DOD	Department of Defense
EP	end point
F	Fahrenheit
FCC	fluid catalytic cracking
FBP	final boiling point
FOE	fuel oil equivalent
gal.	gallons
IBP	initial boiling point
init.	initial (as in initial boiling point)
LHSV	liquid hourly space velocity
MM	millions
OPEC	Organization of Petroleum Exporting Countries
ppm	parts per million
ppmw	parts per million by weight
lb.	pounds
psig	pounds per square inch gauge
RVP	Reid vapor pressure
sp. gr.	specific gravity
SCF	standard cubic feet
SCFD	standard cubic feet per day
SCFH	standard cubic feet per hour
M	thousand
TPD	tons per day
USAF	United States Air Force
U.S.	United States
vol.	volume
wt.	weight

U.S. GPO: 646-066

END

FILMED

1-86

DTIC