AD-A157 618 FLIGHT WORTHINESS OF FIRE RESISTANT HYDRAULIC SYSTEMS 1/4
VOLUME 1(U) MCDONNELL AIRCRAFT CO ST LOUIS MO
J R JEFFERY ET AL. DEC 84 AFWAL-TR-84-2085

UNCLASSIFIED F33615-80-C-2074 F/G 13/7 NL

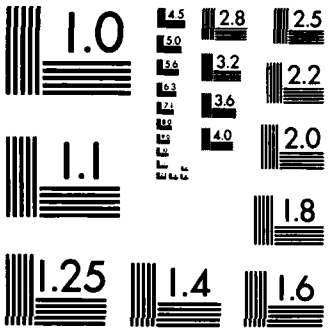

MICROCOPY RESOLUTION TEST CHART
NATIONAL BUREAU OF STANDARDS-1963-A

AFWAL-TR-84-2085
VOLUME I

FLIGHT WORTHINESS OF FIRE RESISTANT HYDRAULIC SYSTEMS

AD-A157 618

J.R. Jeffery
R.B. Merrell
N.J. Pierce
M.J. Stevens
R.E. Young

McDonnell Douglas Corporation
McDonnell Aircraft Company
P.O. Box 516
St. Louis, Missouri 63166

December 1984

Final Report for Period January 1981 - December 1984

DTIC FILE COPY

Approved for public release; distribution unlimited

DTIC
ELECTE
AUG 2 1985
S D

Aero Propulsion Laboratory
Air Force Wright Aeronautical Laboratories
Air Force Systems Command
Wright-Patterson Air Force Base, Ohio 45433

85 7 10 006

NOTICE

When Government drawings, specifications, or other data are used for any purpose other than in connection with a definitely related Government procurement operation, the United States Government thereby incurs no responsibility nor any obligation whatsoever; and the fact that the government may have formulated, furnished, or in any way supplied the said drawings, specifications, or other data, is not to be regarded by implication or otherwise as in any manner licensing the holder or any other person or corporation, or conveying any rights or permission to manufacture use, or sell any patented invention that may in any way be related thereto.

This report has been reviewed by the Office of Public Affairs (ASD/PA) and is releasable to the National Technical Information Service (NTIS). At NTIS, it will be available to the general public, including foreign nations.

This technical report has been reviewed and is approved for publication.

WILLIAM B. CAMPBELL
Power Technology Branch
Aerospace Power Division
Aero Propulsion Laboratory

HUGH C. BRIGGS, Major, USAF
Chief Power Technology Branch
Aerospace Power Division
Aero Propulsion Laboratory

FOR THE COMMANDER

JAMES D. REAMS
Chief, Aerospace Power Division
Aero Propulsion Laboratory

"If your address has changed, if you wish to be removed from our mailing list, or if the addressee is no longer employed by your organization please notify AFWAL/POOS *, W-PAFB, OH 45433 to help us maintain a current mailing list".*

Copies of this report should not be returned unless return is required by security considerations, contractual obligations, or notice on a specific document.

UNCLASSIFIED

SECURITY CLASSIFICATION OF THIS PAGE

REPORT DOCUMENTATION PAGE

1a. REPORT SECURITY CLASSIFICATION UNCLASSIFIED	1b. RESTRICTIVE MARKINGS
2a. SECURITY CLASSIFICATION AUTHORITY	3. DISTRIBUTION/AVAILABILITY OF REPORT Approved for public release; Distribution unlimited.
2b. DECLASSIFICATION/DOWNGRADING SCHEDULE	
4. PERFORMING ORGANIZATION REPORT NUMBER(S)	5. MONITORING ORGANIZATION REPORT NUMBER(S) AFWAL-TR-84-2085
6a. NAME OF PERFORMING ORGANIZATION McDonnell Douglas Corp. McDonnell Aircraft Company 6b. OFFICE SYMBOL (If applicable)	7a. NAME OF MONITORING ORGANIZATION
6c. ADDRESS (City, State and ZIP Code) P.O. Box 516 St. Louis, Missouri 63166	7b. ADDRESS (City, State and ZIP Code)
8a. NAME OF FUNDING/SPONSORING ORGANIZATION Aero Propulsion Laboratory 8b. OFFICE SYMBOL (If applicable) AFWAL/POOS	9. PROCUREMENT INSTRUMENT IDENTIFICATION NUMBER F33615-80-C-2074
8c. ADDRESS (City, State and ZIP Code) Air Force Wright Aeronautical Laboratories (AFSC) Wright-Patterson AFB, Ohio 45433	10. SOURCE OF FUNDING NOS. PROGRAM ELEMENT NO.: PE 62203F PROJECT NO.: 3145 TASK NO.: 30 WORK UNIT NO.: 31
11. TITLE (Include Security Classification) Flight Worthiness of Fire Resistant Hydraulic Systems - Volume I	
12. PERSONAL AUTHOR(S) J.R. Jeffery, R.B. Merrell, N.J. Pierce, M.J. Stevens, R.E. Young	
13a. TYPE OF REPORT Final Report 13b. TIME COVERED FROM JAN 81 TO DEC 84	14. DATE OF REPORT (Yr., Mo., Day) 1984, December, 15 15. PAGE COUNT 308
16. SUPPLEMENTARY NOTATION	

17. COSATI CODES			18. SUBJECT TERMS (Continue on reverse if necessary and identify by block number)
FIELD	GROUP	SUB. GR.	Chlorotrifluoroethylene (CTFE) fluid. Fire resistant hydraulic system. Hydraulic system life-cycle costs. (Continued-Page 2)

19. ABSTRACT (Continue on reverse if necessary and identify by block number)

This document is the first of two volumes which make up the Flight Worthiness of Fire Resistant Hydraulic Systems final report. This volume reports a study to select a flight worthy hydraulic system in which to test the chlorotrifluoroethylene (CTFE) hydraulic fluid. Aircraft selection, hardware and concept definition, system and weight analysis, and reliability, maintainability and life cycle costs (LCC) studies are reported in ~~this~~ volume. The F-15 and KC-10A were selected for comparison between the present fluid and system configuration and CTFE fluid at 8,000 psi plus various energy conservation and water hammer control concepts. The results ~~of~~ this study show the weight penalty of the nonflammable fluid (CTFE) can be overcome by use of 8,000 psi operating pressures.

(Continued-Page 2)

20. DISTRIBUTION/AVAILABILITY OF ABSTRACT UNCLASSIFIED/UNLIMITED X SAME AS RPT ☐ DTIC USERS ☐	21. ABSTRACT SECURITY CLASSIFICATION UNCLASSIFIED
22a. NAME OF RESPONSIBLE INDIVIDUAL William Bruce Campbell	22b. TELEPHONE NUMBER (Include Area Code) (513) 255-6241 22c. OFFICE SYMBOL AFWAL/POOS

DD FORM 1473, 83 APR EDITION OF 1 JAN 73 IS OBSOLETE

UNCLASSIFIED

SECURITY CLASSIFICATION OF THIS PAGE

Block 18 (Continued):

Hydraulic system weights.
Nonflammable hydraulic fluid;
Phosphonitrilic Fluoroelastomer (PNF);
Ethylene Propylene Diene Monomer (EPDM);
Flight Worthiness of Fire Resistant Hydraulic Systems (FWFRHS).

Block 19 (Continued):

Performance, water hammer transients, fluid pumpability, sealing, null leakage control, and demonstration system effects were investigated during Phases II and III of this contract (see Volume II).

Accession For
NTIS GRA&I ☑
DTIC TAB ☐
Unannounced ☐
Justification
Dist
A-1

FOREWORD

This report was prepared by the McDonnell Aircraft Company for the United States Air Force under contract number F33615-80-C-2074, which was conducted between January 1981 and December 1984. This contract was accomplished under Project Number 31453031. The work was administered under the direction of the Aero Propulsion Laboratory at the Air Force Wright Aeronautical Laboratories, Air Force Systems Command, Wright-Patterson AFB, Ohio, with Mr. W. B. Campbell (AFWAL/POOS) as Project Manager. Technical assistance was also provided by Mr. Ed Binns (AFWAL/POOS). Mr. C. E. Snyder, Mrs. L. Gschwender, and Mr. T. L. Graham of the Materials Laboratory at Wright-Patterson AFB (AFWAL/MLBT) contributed nonflammable hydraulic fluid and elastomer compatibility information.

Phase I contributors at the McDonnell Aircraft Company Hydraulic Staff area included A. Harmon; R. A. Herzmark; C. N. Hill; R. J. Levek; N. J. Pierce, Program Manager; J. R. Snyder; M. J. Stevens; and R. E. Young, Principal Investigator. Other participants at MCAIR included B. Baker, Maintainability; G. Fuchs, Reliability; C. E. Earnhart and J. R. Hunt, Operations Analysis; T. O. Shah, Weights; and W. Body, Marketing. Douglas Aircraft Company collaborators in Phase I were R. B. Merrell, E. Somekh, and Don Evans.

During Phase II the various components were procured and tested at each contractor's facility. Air Force and MCAIR Hydraulic Staff personnel mentioned above participated in the successful selection, analysis, procurement, and testing. The support and cooperation provided by the following firms which supplied the necessary components is gratefully acknowledged:

Abex Corporation; 8,000 psi hydraulic pump
Aircraft Porous Media, Inc.; hydraulic filters
Circle Seal Controls; hydraulic relief and check valves
C. E. Conover & Co., Inc.; hydraulic seals
Greene, Tweed & Co.; hydraulic seals
Parker Hannifin Corp., Bertea Control Systems Div.; hydraulic servo-actuator and utility actuator
W. S. Shamban; hydraulic seals

Phase III of this contract involved system build-up, component installation, demonstration system testing, and component teardown. Added to the list of contributors at MCAIR's Hydraulic Staff are J. R. Jeffery, J. A. Platt, and A. J. Salvadore. MCAIR's hydraulic development laboratory participants were Messrs. F. R. Broach, C. G. Bunting, L. E. Clements, J. L. Crider, M. J. Heying, E. A. Koertge, E. G. Krauss, R. Lai, R. E. Moll, C. V. Palmer, C. D. Ring, and M. A. Stratemeyer.

NOTE: Material referenced as Volume II and Volume III will be found in Volume II only.

TABLE OF CONTENTS

Section		Page
I	INTRODUCTION AND SUMMARY	1
	1.1 INTRODUCTION	1
	1.1.1 Background	1
	1.1.2 Program Objectives	1
	1.1.3 Program Plan	1
	1.2 SUMMARY	2
	1.2.1 Task 1 Results	2
	1.2.2 Task 2 Results	2
	1.2.3 Task 3 Results	2
	1.2.4 Conclusions and Recommendations	4
II	PHASE I - AIRCRAFT SELECTION AND SYSTEM OPTIMIZATION	5
	2.1 TASK I - AIRCRAFT SELECTION	5
	2.1.1 RATIONALE FOR F-15 AND KC-10A SELECTION	5
	2.1.2 SYSTEM DESCRIPTION AND FEATURES	5
	2.1.2.1 F-15	5
	2.1.2.2 KC-10A	8
	2.1.3 HYDRAULIC SYSTEM WEIGHT BREAKDOWN	10
	2.2 TASK II - IDENTIFY CONCEPTS, APPROACHES AND/OR FLUID MODIFICATIONS	12
	2.2.1 CONCEPTS/APPROACHES	12
	2.2.1.1 Search and Results	12
	2.2.1.2 Description and Discussion	12
	2.2.1.2.1 Higher Pressure	12
	2.2.1.2.2 Force Motors	12
	2.2.1.2.3 Energy Conservation	15
	2.2.1.2.4 Nonlinear Control Valves	24
	2.2.1.2.5 "Odd-Even" Distribution System	28
	2.2.1.2.6 Control Restrictor Elimination - Utility Functions	28

TABLE OF CONTENTS (Continued)

Section				Page
			2.2.1.2.7 Water Hammer Control (Flight Controls)	30
			2.2.1.2.8 Water Hammer Control (Utility).	35
	2.2.2 FLUID MODIFICATIONS AND CONCERNS . . .			36
		2.2.2.1 Summary		36
		2.2.2.2 Viscosity Control (Restrictors vs. Nonrestrictors)		38
		2.2.2.3 Pressure-Viscosity Correlation		40
		2.2.2.4 Increase in Water Hammer Peaks		45
		2.2.2.5 System Heat Rejection/Lap Leakage Control		45
		2.2.2.6 Seal Materials		49
		2.2.2.7 Seal Configuration vs. Pressure		49
		2.2.2.8 CTFE Fluid Pumpability vs. Pressure		49
2.3 TASK III - SELECTED AIRCRAFT SYSTEM ANALYSIS-WEIGHT IMPACT OF CONCEPTS/APPROACHES				51
	2.3.1 APPROACH			51
	2.3.2 PRESSURE SELECTION			51
		2.3.2.1 Design Criteria Development .		51
		2.3.2.2 Actuator Selection, Detail Design and Results		57
			2.3.2.2.1 F-15 Study Results	61
			2.3.2.2.2 KC-10A Study Results	77
		2.3.2.3 Distribution System Selection, Detail Design Results		93
		2.3.2.4 Fluid Volume/Weight Control .		99
		2.3.2.5 Miscellaneous Component Weight Control		101
		2.3.2.6 Aircraft Hydraulic System Weight vs. Pressure Trend Results		102
		2.3.2.7 Dynamic Analysis - Water Hammer Control - Flight Control and Utility Functions		106

TABLE OF CONTENTS (Continued)

Section			Page
		2.3.2.7.1 F-15	109
		2.3.2.7.2 KC-10A	133
		2.3.2.7.3 "Academic" Model .	141
	2.3.2.8	Pressure Selection for Continued Analysis	152
	2.3.2.9	Advanced Design Actuators . .	152
	2.3.2.10	Force Motor Operated Valve Manifold	155
2.3.3	CONCEPTS EVALUATION SUMMARY		159
	2.3.3.1	Weight Savings Concepts . . .	159
		2.3.3.1.1 Higher System Pressure	159
		2.3.3.1.2 Force Motor . . .	161
		2.3.3.1.3 Pressure Intensifiers . . .	162
		2.3.3.1.4 Non-Linear Control Valve	169
		2.3.3.1.5 Odd-Even Distribution System	170
		2.3.3.1.6 Control Restrictor Elimination - Utility	170
		2.3.3.1.7 Asymmetric Line Loss	175
	2.3.3.2	Performance, Maintenance and Improvement Concepts	176
		2.3.3.2.1 Force Motor . . .	176
		2.3.3.2.2 Load Recovery Valves	176
		2.3.3.2.3 Non-Linear Control Valves	181
		2.3.3.2.4 Asymmetric Line Loss	181
		2.3.3.2.5 Local Velocity Reduction	181
		2.3.3.2.6 Non-Linear Valve Plus Orifice - Utility	182
	2.3.3.3	Additional New Concepts and Continuing Studies	182

TABLE OF CONTENTS (Continued)

Section		Page
	2.3.3.3.1 Digital Valve-Leakage Control. .	182
	2.3.3.3.2 A02 vs. MIL-H-83282	184
	2.3.3.3.3 Pressure Intensifiers . . .	184
	2.3.3.4 Concepts Selected for Continued Analysis	184
2.3.4	FLUID SELECTION FOR CONTINUED ANALYSIS	186
2.3.5	FINAL WEIGHT IMPACT ANALYSIS	187
	2.3.5.1 Modified Design Criteria . .	187
	2.3.5.1.1 F-15 Weight Changes for Change in Design Criteria at 8000 psi . . .	188
	2.3.5.2 Component Detail Design and Results	189
	2.3.5.3 Distribution System Detail Design and Results.	191
	2.3.5.4 Concepts, Detail Design and Results	191
	2.3.5.4.1 Pressure Intensifier. . . .	191
	2.3.5.5 Fluid Volume/Weight Control .	212
	2.3.5.6 Heat Exchanger Requirements .	214
	2.3.5.7 Stabilator Stiffness	214
	2.3.5.8 Final Weight Impact Results	223
2.4	TASK 12 - RELIABILITY, MAINTAINABILITY AND LIFE CYCLE COSTS (LCC) ANALYSIS	224
2.4.1	Ground Rules	224
	2.4.1.1 F-15 Alternate Configurations	230
	2.4.1.2 KC-10A Alternate Configurations	237
2.4.2	Reliability Results.	243
2.4.3	Maintainability Results.	246
2.4.4	Life Cycle Cost Analysis	247

TABLE OF CONTENTS (Continued)

Section		Page
	2.4.4.1 Analytical Approach	247
	2.4.4.2 Summary of the Results . . .	248
	2.4.4.3 Ground Rules and Assumptions.	249
	2.4.4.4 PRICE Model Analysis	249
	2.4.4.5 ACCM Analysis	252
	2.4.5 KC-10A Life Cycle Cost Analysis . . .	259
	2.4.5.1 General	259
	2.4.5.2 Assumptions, Ground Rules & Guidelines	260
	2.3.5.3 Approach	262
	2.4.5.4 Results	267
	2.5 DEMONSTRATION SYSTEM	271
III	PHASE I - CONCLUSIONS AND RECOMMENDATIONS. . . .	276
	3.1 CONCLUSIONS	276
	3.1.1 Fluid Concerns	276
	3.1.2 Concepts/Approaches	277
	3.1.3 Follow on Concepts	279
	3.1.4 Life Cycle Costs (LCC)	279
	3.1.5 Fluid Modifications	280
	3.2 RECOMMENDATIONS	280
	3.2.1 Other Approaches	281
IV	DATA ACCESSION LIST/INTERNAL	282
V	REFERENCES	283

LIST OF ILLUSTRATIONS

Figure		Page
1	Summary Program Schedule	2
2	Candidate Concepts/Approaches For System Weight Reduction and Maintaining Acceptable Performance	3
3	Selected Final Configuration For Weight Savings Evaluation	3
4	F-15 Hydraulic System Block Diagram	6
5	F-15 Hydraulic System Component Locations	7
6	KC-10A Hydraulic System Block Diagram	9
7	KC-10A Flight Control Surfaces	10
8	Candidate Aircraft Hydraulic System Weight Breakdown	11
9	Direct Valve Driver Development For Flight Control Actuators	14
10	Life Cycle Costs Study Force Motor Application On F-18	15
11	Flight Control Subsystem Performance-Rate vs. Hinge Moment	16
12	Pressure Intensifier Flight Control Subsystem Performance Rate vs. Hinge Moment	18
13	Pressure Intensifier (PI) Installation And Control Characteristics	19
14	Central System vs. Pressure Intensifier Areas Of Performance Responsibility	20
15	Pressure Intensifier Utility Application	21
16	Performance Comparison Stable vs. Unstable Aircraft (Pressure Intensifier Benefits Shown)	22
17	Load Recovery Valve Schematic	23
18	Load Recovery Valve Performance Evaluation Average Rate Capability	24
19	Load Recovery Valve Performance Evaluation Flow Demand	25

LIST OF ILLUSTRATIONS (Continued)

Figure		Page
20	Pressure Loss Distribution - Flight Control Subsystem	26
21	F-15 R/H Stabilator Actuator Valve Area vs. Stroke	27
22	F-15 Main Landing Gear Actuator Operating Time vs. Fluid Temperature	29
23	F-15 Main Landing Gear Actuator Operating Time vs. Fluid Temperature	30
24	Development Version Of Water Hammer Attenuator	31
25	Transient Caused By Maximum Input Rate Reversal While Retracting (Attenuator Installed)	32
26	Transient Caused By Maximum Input Rate Reversal While Retracting (No Attenuator)	33
27	0.25 in. Spool Sleeve Water Hammer Attenuator	34
28	Pressure Loss Distribution	35
29	Conventional vs. Local Velocity Reduction	36
30	Hydraulic Fluid Properties	37
31	Flow vs. Pressure Drop at 0° and 200°F	39
32	F-15 Main Landing Gear Actuator Operating Time vs. Fluid Temperature	40
33	Physical Properties Of Other Halocarbon Fluids	41
34	Effect of Pressure On The Viscosity Of Halocarbon Oil 208	42
35	Effect of Pressure On The Viscosity Of Halocarbon Oil 11-14	43
36	Effect of Pressure On The Viscosity Of Halocarbon Oil 11-21	44
37	F-15 L/H Stabilator PC-1 Pressure During Maximum Rate, No-Load Pitch Reversal	46
38	High Pressure Hydraulic Valve Leak Test Fixture	47

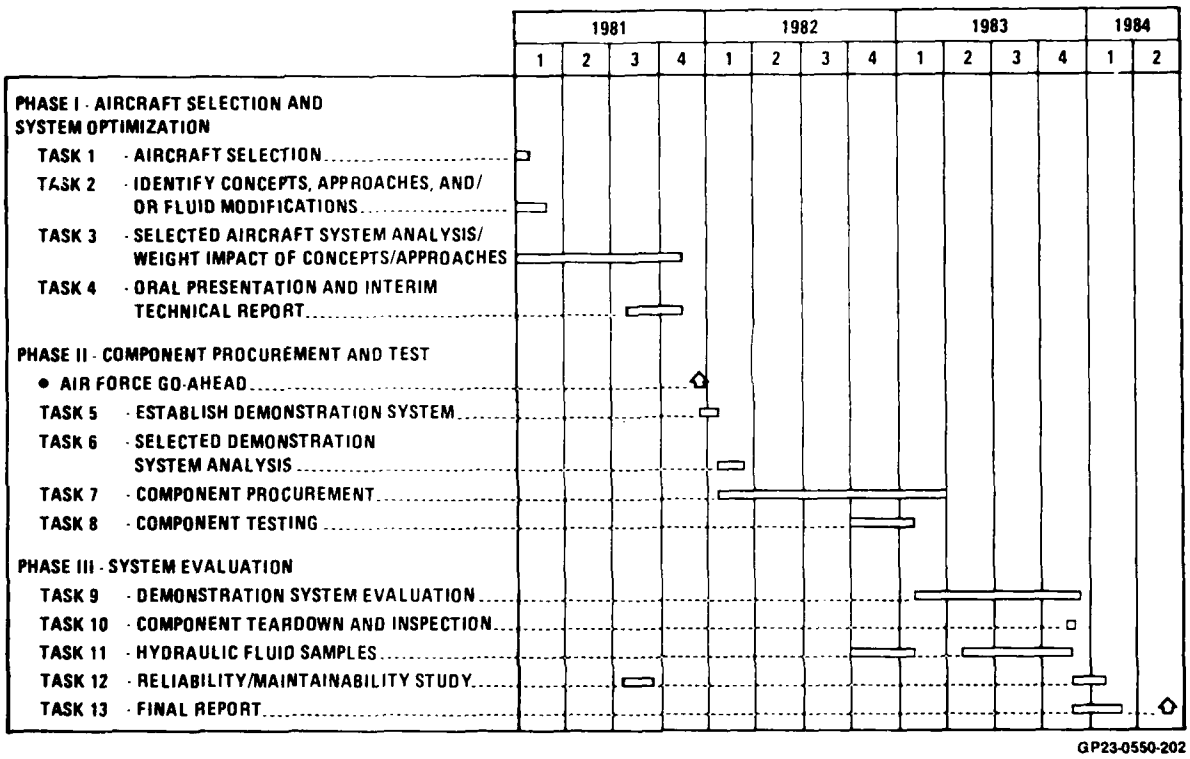

Figure 1.
SUMMARY PROGRAM SCHEDULE

1.2 Summary

1.2.1 Task 1 Results - The F-15 fighter and the KC-10A tanker/cargo aircraft were selected as best meeting the program requirements.

1.2.2 Task 2 Results - Figure 2 presents the candidate concepts/approaches identified for system weight reduction.

1.2.3 Task 3 Results - Figure 3 presents the selected candidate concepts/approaches for final evaluation. In addition, evaluation effort was continued on the use of pressure intensifiers and control valve modifications.

SECTION I
1.0 INTRODUCTION AND SUMMARY

1.1 Introduction - Air Force Contract Number F33615-80-C-2074, "Flightworthiness of Fire Resistant Hydraulic Systems", was awarded to McDonnell Douglas Corporation (MDC) effective 15 January 1981. Volume I covers Phase I, including the oral report presented at Wright-Patterson AFB on 19 November 1981. Phase I included aircraft selection and hydraulic system optimization. Volume II reports the procurement of the hydraulic system components and supplier acceptance test procedures and results as required by Phase II of the contract. Volume III describes Phase III which was the system performance and endurance test phase.

1.1.1 Background - In the middle 1970s, the Air Force identified significant aircraft damage and losses due to noncombat hydraulic fluid fires. As a result of the concern over the hydraulic fluid fires a search for a nonflammable hydraulic fluid was initiated.

A feasibility contract (F33615-76-C-2064) was awarded to Boeing Military Airplane Company to evaluate and select a nonflammable fluid and conduct feasibility tests (Reference 5). The Air Force and Boeing selected the Halocarbon chlorotrifluoroethylene (CTFE) A08 fluid and the feasibility of its use in 3000 psi systems was demonstrated.

While the nonflammability goals were achieved, the fluid was 2.2 times heavier, thus significantly increasing the weight of 3,000 psi aircraft hydraulic systems. MDC was awarded the Flight Worthiness of Fire Resistant Hydraulic Systems contract to minimize the weight penalty of using CTFE fluid in future Air Force aircraft hydraulic systems.

1.1.2 Program Objectives - This program established the design technology required to utilize CTFE base fluid in modern high performance fighter and cargo/bomber aircraft hydraulic systems with minimum weight penalty and assurance of acceptable performance.

1.1.3 Program Plan - The program included three phases. The first phase (reported in this document) was system optimization.

Phase II involved component procurement and test, and Phase III a system performance and endurance test.

The summary program schedule is presented in Figure 1.

Phase I included four tasks. Task 1 was selection of one fighter and one cargo/bomber aircraft for study. In Task 2, concepts, approaches, and fluid modifications were identified which can reduce weight. Task 3 involved analysis to determine the potential weight savings for each candidate. Task 4 required organization of the analytical results for oral presentation and included the contractor recommendations for proceeding with the program.

LIST OF ILLUSTRATIONS (Continued)

Figure		Page
262	Life Cycle Cost Breakdown, 8000 psi Baseline	269
263	Life Cycle Cost Delta, 8000 psi over 3000 psi Baseline	270
264	Percent Change in Life Cycle Costs	271
265	Demonstration System Block Schematic	272
266	Guidelines For Seal And Gland Design	274
267	Flight Control And Utility Actuator Dynamic Seal Configurations	275
268	Conclusions	276
269	Basic Areas of Interest	276
270	Candidate Concepts/Approaches for System Weight Reduction and Maintaining Acceptable Performance . .	277
271	Candidate Aircraft Hydraulic System Weight Breakdown	277
272	F-15 Weight Summary	278
273	KC-10A Weight Summary	278
274	F-15 Life Cycle Cost Assessment	279
275	KC-10A Life Cycle Cost Assessment	280
276	Recommendations	281

LIST OF ILLUSTRATIONS (Continued)

Figure		Page
241	Aircraft System Life Cycle Cost Assessment Summary	249
242	Cost Ground Rules	250
243	Equipment Weight Summary	250
244	Cost Of Hydraulics And Related Equipment	251
245	Unit (Shipset) Production Cost	252
246	Aircraft System Weight	253
247	Aircraft System Weight	254
248	Aircraft System Weight Summary	256
249	Aircraft System Life Cycle Cost Analysis Of Alternate 1	256
250	Aircraft System Weight Summary	257
251	Aircraft System Life Cycle Cost Analysis Of Alternate 2	257
252	Weight Comparison, F-15 Baseline vs Modified Baseline	258
253	Cost Comparison, F-15 Baseline vs Modified Baseline	258
254	LCC Savings Comparison, F-15 Baseline vs A Modified F-15 Baseline	259
255	Steps in Deriving Life Cycle Cost Data	262
256	Cost Elements Estimated	263
257	Integration of Cost Analysis	265
258	Quantity of Parts Evaluated (Per Aircraft)	266
259	Hydraulic System Weight Summary	266
260	Life Cycle Cost Summary	267
261	Life Cycle Cost Breakdown, 3000 psi Baseline	268

LIST OF ILLUSTRATIONS (Continued)

Figure		Page
220	Triplex (3 Channel) Linear Ledex Force Motor Cross Section	225
221	National Water Lift (NWL) Rotary Force Motor Cross Section	226
222	Direct Valve Driver Development For Flight Control Actuators	227
223	Pressure Intensifier Schematic	228
224	MCAIR Pressure Intensifier	229
225	F-15 3000 psi Baseline Hydraulic System	231
226	F-15 8000 psi Baseline Hydraulic System	232
227	F-15 8000 psi Alternate 1 Hydraulic System	233
228	F-15 8000 psi Alternate 1(a) Hydraulic System	234
229	F-15 8000 psi Alternate 2 Hydraulic System	235
230	F-15 Configurations Data	237
231	Flight Controls Mechanical Reversion For FBW System	238
232	KC-10A Flight Controls Mechanical Reversion For FBW System	239
233	KC-10A 3000 psi and 8000 psi Baseline	240
234	KC-10A Alternate 1	241
235	KC-10A Alternate 2 8000 psi	242
236	Mean Flight Hours Between Failures (MFHBF)	244
237	KC-10A Qualitative Reliability Data	245
238	Unscheduled Maintainence Manhours/Flight Hour Organizational and Intermediate Maintainence	246
239	Structure of Cost Analysis	247
240	Subsystem Life Cycle Cost Assessment Summary	248

LIST OF ILLUSTRATIONS (Continued)

Figure		Page
198	KC-10A Hydraulic System Weight Summary	209
199	KC-10A Total Wet Actuator Weight vs. Pressure	209
200	F-15 Distribution System Weight Summary	210
201	KC-10A Distribution Weight System	210
202	MCAIR Pressure Intensifier	211
203	Weight Estimates for Actuators With Pressure Intensification	212
204	F-15 Fluid Weight Summary	212
205	KC-10A Fluid Weight Summary	213
206	F-15 Tubing Size/Length Summary	213
207	Candidate Aircraft Heat Rejection (BTU/MIN)	214
208	Stabilator Actuator Structural Stiffness Model	215
209	F-15 Stabilator Spring Rate Model (Pin Ended)	215
210	F-15 Stabilator Spring Rate Model (Trunnion Mounting)	216
211	F-15 Stabilator Actuator Stiffness Design R-14 in.	217
212	F-15 Stabilator Installations For Stiffness Control	218
213	High Pressure Hydraulic Study F-15 Stabilator Cylinder Assembly	219
214	8000 psi Stabilator Stiffness Critical Design	219
215	F-15 Stabilator Spring Rate Summary	220
216	F-15 Stabilator Infinite Frequency Stiffness	221
217	F-15 Stabilator 3000 psi Actuator Spring Rate	222
218	F-15 Weight Summary	223
219	KC-10A Weight Summary	224

LIST OF ILLUSTRATIONS (Continued)

Figure		Page
178	CTFE A02 Low Viscosity Fluid Benefits	174
179	Pressure Loss Distribution	175
180	Conventional System Typical Flight Control Sub-System Performance Characteristics	177
181	Schematic - Load Recovery Valve Usage	178
182	Pressure Drop Distribution - Conventional and Load Recovery Systems	179
183	Asymmetric and Nonlinear Valve System (A-NLV) Impact on Assisting Load Performance	181
184	Two Stage Valve Assembly Cross Section	183
185	Candidate Concepts/Approaches for System Weight Reduction and Maintaining Acceptable Performance	185
186	Selected Final Configuration For Weight Savings Evaluation	185
187	CTFE A02 Low Viscosity Fluid Benefits	186
188	F-15 Main Landing Gear Actuator Operating Time vs. Fluid Temperature	187
189	Design Criteria 8000 psi	188
190	Weight Increase	188
191	Candidate Aircraft Hydraulic System Weight Breakdown	189
192	F-15 Weight Summary	190
193	F-15 8000 psi Component Design	190
194	F-15 Component Weight Breakdown By Subsystem	192
195	F-15 Hydraulic Equipment Not Detailed In Subsystem Summary	199
196	KC-10A Weight Summary	199
197	KC-10A Component Weight Breakdown By Type	200

LIST OF ILLUSTRATIONS (Continued)

Figure		Page
160	F/A-18 Flap Servo Actuator	156
161	F/A-18 Flap Servo Actuator Force Motor Concept	157
162	F/A-18 Flap Servo Actuator Weight vs. Pressure	158
163	F-15 Hydraulic Components	159
164	F-15 Hydraulic System Weight vs. Pressure	160
165	KC-10A Hydraulic System Weight vs. Pressure	161
166	Benefits - Direct Valve Driver Applied To A Current Aircraft Stabilator	162
167	Performance Characteristics Conventional vs. Pressure Intensifier/Central System (PI/C) Actuation Systems	163
168	Performance Characteristics Conventional vs. Pressure Intensifiers/Central System (PI/C) Actuation Systems	164
169	Performance Characteristics Conventional vs. Pressure Intensifier/Central System (PI/C) Actuation Systems	165
170	Pressure Intensifier/Central System Schematic and Control Characteristics	166
171	Sundstrand PI Envelope	167
172	Sundstrand PI Schematic	168
173	MCAIR Pressure Intensifier	169
174	Hydraulic Fluid Properties	171
175	Typical Utility Subsystem Operating Time vs. Fluid Temperature	172
176	F-15 Main Landing Gear Actuator Operating Time vs. Fluid Temperature	173
177	F-15 Main Landing Gear Actuator Operating Time vs. Fluid Temperature	174

LIST OF ILLUSTRATIONS (Continued)

Figure		Page
142	KC-10A Hydraulic System No. 3 Left Spoiler No. 3 Pressure, 50ms Valve Reversal (Local Velocity Reduction)	139
143	KC-10A Hydraulic System No. 3 Right Inboard Elevator 50ms Valve Reversal	139
144	KC-10A Hydraulic System No. 3 Right Inboard Elevator 50ms Valve Reversal, Local Velocity Reduction	140
145	KC-10A System No. 3 Left Hand Inboard Aileron	140
146	Linear And Nonlinear Valve Water Hammer Characteristics In A Nonreflective Circuit	142
147	Linear And Nonlinear Valve Water Hammer Characteristics In A Reflective Circuit No. 1	143
148	Linear And Nonlinear Valve Water Hammer Characteristics In A Reflective Circuit No. 2	144
149	Linear And Nonlinear Valve Water Hammer Characteristics In A Reflective Circuit No. 3	145
150	Linear And Nonlinear Valve Water Hammer Characteristics In A Reflective Circuit No. 4	146
151	Linear And Nonlinear Valve Water Hammer Characteristics In A Reflective Circuit No. 5	147
152	Linear And Nonlinear Valve Water Hammer Characteristics In A Reflective Circuit No. 6	148
153	Pressure Rise vs. Valve Reversal Time (Basic System Transients)	149
154	Pressure Rise vs. Valve Reversal Time (Appendix Line Effect on Transients)	150
155	Pressure Rise vs. Valve Reversal Time (Area Change Effect on Transients)	151
156	Pressure Selection - 8000 psi	152
157	Advanced Design Fighter Flap Actuator	153
158	Advanced Design Fighter Aileron Actuator (Single)	154
159	Advanced Design Fighter Flap Actuator (Tandem)	155

LIST OF ILLUSTRATIONS (Continued)

Figure		Page
124	F-15 L/H Stabilator Actuator Water Hammer Characteristics PC-1 System (Conventional)	121
125	F-15 L/H Stabilator Actuator Water Hammer Characteristics PC-1 System (Pierced-York Valve)	122
126	Water Hammer Pressure Rise And Coiled Tube Assembly Weight vs. Tube Size	123
127	Summary of F-15 PC-1 Stabilator Circuit Hytran Configurations	125
128	F-15 PC-1 HYTRAN Analyses Summary	126
129	F-15 Utility Hydraulic System Speedbrake Test Circuit HYTRAN Line And Component Arrangement	127
130	F-15 Speedbrake Operating Cycle	128
131	Valve Characteristic Curves	129
132	Pressure Upstream Of Valve Type 32 Characteristic Curve 20ms Valve Reversal	130
133	Pressure Upstream Of Actuator Type 32 Characteristic Curve 20ms Valve Reversal	131
134	Baseline Pressure Upstream of Valve Type 32 Characteristic Curve 50ms Valve Reversal	132
136	Pressure Upstream of Valve Type 4 Characteristic Curve 20ms Valve Reversal	132
135	Pressure Downstream of Valve (Return System) Type 4 Characteristic Curve 20ms Valve Reversal	133
137	KC-10A Hydraulic System No. 3 HYTRAN Analysis	134
138	KC-10A Hydraulic System No. 3 Diagram	135
139	KC-10A System No. 3 Right Inboard Elevator, Pressure vs. Time	136
140	KC-10A System No. 3 Left Spoiler No. 3, Pressure vs. Time	137
141	KC-10A Hydraulic System No. 3 Left Spoiler No. 3 Pressure, 50ms Valve Reversal	138

LIST OF ILLUSTRATIONS (Continued)

Figure		Page
107	Speed Of Sound In Hydraulic Fluid vs. Temperature And Pressure	107
108	Speed Of Sound In Hydraulic Fluid vs. Temperature And Pressure	107
109	Water Hammer Pressure Rise Characteristics vs. Pressure And Temperature	108
110	Water Hammer Pressure Rise Characteristics vs. Pressure And Temperature	108
111	F-15 PC-1 Supply and Return System	110
112	F-15 R/H Stabilator Actuator Valve Area vs. Stroke	111
113	Water Hammer Pressure Wave Reflection Characteristics	112
114	F-15 R/H Stabilator Actuator Pressure - Time History (2 MS Reversal)	113
115	F-15 R/H Stabilator Actuator Pressure - Time History (38 MS Reversal)	114
116	F-15 R/H Stabilator Actuator Water Hammer Pressure Rise (2 MS Reversal)	115
117	F-15 R/H Stabilator Actuator Water Hammer Pressure Rise (38 MS Reversal)	115
118	F-15 L/H Stabilator Actuator Pressure - Time History (2 MS Reversal)	116
119	F-15 L/H Stabilator Actuator Pressure - Time History (38 MS Reversal)	117
120	F-15 Stabilator Actuator Water Hammer Pressure Rise (2 MS Reversal)	118
121	F-15 Stabilator Actuator Water Hammer Pressure Rise (38 MS Reversal)	118
122	F-15 R/H Stabilator Actuator Water Hammer Characteristics PC-1 System (Conventional Valve)	119
123	F-15 R/H Stabilator Actuator Water Hammer Characteristics PC-1 System (Pierced-York Valve)	120

LIST OF ILLUSTRATIONS (Continued)

Figure		Page
84	Design Variables	92
85	Σ Actuator Weights vs. Hydraulic System Pressure	93
86	Distribution System Sizing	94
87	KC-10A CTFE High Pressure Hydraulic System Sizing Ground Rules	94
88	F-15 CTFE High Pressure Hydraulic System Sizing Ground Rules	94
89	High Pressure Design Criteria	95
90	Distribution System Dry Weight Factors	96
91	Distribution System Design Criteria	97
92	Simulated vs. Total Dry Weight Summary	97
93	Distribution System Weight Savings vs. Configuration Summary	98
94	F-15 Distribution System Weight Summary	98
95	KC-10A Distribution System Weight Summary	99
96	Fluid Weight vs. Pressure	99
97	F-15 Fluid System Weight Summary	100
98	KC-10A Fluid weight Summary	100
99	Miscellaneous Component Weight vs. System Pressure	101
100	F-15 Miscellaneous Component Weight Summary	102
101	KC-10A Miscellaneous Component Weight Summary	102
102	F-15 Weight Summary	102
103	KC-10A Weight Summary	103
104	F-15 Hydraulic System Weight vs. Pressure	104
105	KC-10A Hydraulic System Weight vs. Pressure	105
106	Maximum Water Hammer Pressure	106

LIST OF ILLUSTRATIONS (Continued)

Figure		Page
60	High Pressure Hydraulic Study F-15 Stabilator Cylinder Assembly (Weight vs Pressure)	70
61	Bypass Door Servoactuator	71
62	Bypass Door Actuator, Weight vs. Pressure	72
63	Diffuser Ramp Servoactuator	73
64	Diffuser Ramp Actuator, Weight vs. Pressure	74
65	Main Landing Gear Actuator	75
66	Main Landing Gear Actuator, Weight vs. Pressure	76
67	Σ Actuator Weights vs. Hydraulic System Pressure	77
68	KC-10A Components Studied	78
69	Study Ground Rules And Assumptions	79
70	Procedure For Sizing Actuators	79
71	KC-10A Main Landing Gear Retract Actuator	80
72	Main Gear Retract Actuator (Weight vs Pressure)	81
73	Main Landing Gear Retract Actuator Study Findings	82
74	Main Gear Door Cylinder	83
75	Main Gear Door Actuator, Weight vs. Pressure	83
76	Main Gear Door Actuator Study Findings	84
77	KC-10A Spoiler Actuator	85
78	Spoiler Actuator, Weight vs. Pressure	86
79	Spoiler Actuator Study Findings	87
80	KC-10A Inboard Elevator Actuator	88
81	Inboard Elevator Actuator, Weight vs. Pressure	89
82	Inboard Elevator Actuator Study Findings	90
83	Inboard Elevator Actuator Assembly Weight Change	91

LIST OF ILLUSTRATIONS (Continued)

Figure		Page
39	High Pressure Hydraulic Valve Leak Test System . . .	48
40	Annular Orifice Equation	48
41	F-15 PC-1 Pump Inlet Pressure During Maximum Rate, No-Load Pitch Reversal	50
42	Component Materials	52
43	Design Procedures	53
44	Flight Control Actuator Cylinder Design Criteria . .	53
45	Actuator Manifolds, Utility Actuator, And Other Components Pressure Side Design Criteria	54
46	Component Return Side Design Criteria	54
47	Distribution System Design Criteria	55
48	Typical Actuator Design Criteria 3000 psi	56
49	Design Procedures	58
50	Design Procedures/Approach/Ground Rules	59
51	F-15 Aileron	62
52	High Pressure Hydraulic Study F-15 Aileron Cylinder Assembly (Weight vs Pressure).	63
53	F-15 Stabilator Servoactuator	64
54	F-15 Stabilator Actuator Detail	65
55	F-15 Stabilator Hydraulic Schematic	65
56	F-15 Stabilator Actuator	66
57	High Pressure Hydraulic Study F-15 Stabilator Cylinder Assembly (No Manifold)	67
58	F-15 Stabilator Manifold	68
59	High Pressure Hydraulic Study F-15 Stabilator Manifolds	69

- **HIGHER SYSTEM PRESSURE**
- **FORCE MOTOR (FLIGHT CONTROLS)**
- **ENERGY CONSERVATION**
  - INTENSIFIERS
  - LOAD RECOVERY VALVES
- **NONLINEAR CONTROL VALVES**
- **"ODD-EVEN" DISTRIBUTION SYSTEM**
- **CONTROL RESTRICTOR ELIMINATION - UTILITY FUNCTIONS**
- **WATER HAMMER CONTROL (FLIGHT CONTROLS)**
  - WATER HAMMER ATTENUATOR
  - ASYMMETRIC LINE LOSS DISTRIBUTION
  - LOCAL VELOCITY REDUCTION
- **WATER HAMMER CONTROL (UTILITY)**
  - WATER HAMMER ATTENUATOR
  - NONLINEAR VALVE PLUS ORIFICE TIME CONTROL
  - FORCE MOTOR VALVE CONTROL

GP23-0550-203

Figure 2.
CANDIDATE CONCEPTS/APPROACHES FOR SYSTEM WEIGHT REDUCTION AND MAINTAINING ACCEPTABLE PERFORMANCE

- **PRESSURE - 8,000 PSI**
- **FLUID - A02 CTFE**
- **CONCEPTS/APPROACHES SELECTED**
  - FORCE MOTORS
  - NONLINEAR VALVES
  - DISTRIBUTION SYSTEM
    - "ODD-EVEN"
    - ASYMMETRIC LINE LOSS
    - LOCAL VELOCITY REDUCTION
    - RESTRICTOR ELIMINATION IN UTILITY FUNCTIONS

GP23-0550-204

Figure 3.
SELECTED FINAL CONFIGURATION FOR WEIGHT SAVINGS EVALUATION

1.2.4 Conclusions and Recommendations

a) Conclusions - The CTFE fluid weight penalty can be controlled by using 8000 psi operating pressures and other concepts. Satisfactory performance can be maintained.

- o Concerns about water hammer and reduced bulk modulus can be controlled. The concerns about pumpability at 8000 psi, sealing, and increased null leakage were resolved during Phases II and III.
- o Concepts include the use of force motors, nonlinear valves, and distribution system innovations, including:
  - o "Odd-Even"
  - o Asymmetric Line Loss
  - o Local Velocity Reduction
  - o Restrictor Elimination (Utility Functions)
- o Two additional concepts, pressure intensifiers and a control valve modification, deserve more attention.
- o The Life Cycle Cost (LCC) effort shows substantial savings using the selected approach.
- o Reduction of the CTFE fluid kinematic viscosity at -65°F to 750-800 centistokes maximum is desirable for additional weight reduction and better low temperature performance.

b) Recommendations - MCAIR recommended that the program continue into Phases II and III, in order to resolve the concerns about fluid pumpability at 8000 psi, sealing, and null leakage control. In addition, the benefits of the selected concepts and the performance of the system will be verified. The following recommendations are also made.

- o Effort should be continued on evaluating the use of the pressure intensifier and the modified control valve concept. If the potential benefits can be confirmed, hardware development will be required.
- o The Air Force should evaluate the possibility of reducing CTFE A02 fluid kinematic viscosity at -65°F to 750-800 centistokes maximum.

SECTION II
PHASE I - AIRCRAFT SELECTION AND SYSTEM OPTIMIZATION

2.1 Task I - Aircraft Selection - The McDonnell Aircraft Company F-15 Eagle and the Douglas Aircraft Company KC-10A Extender were selected for assessment studies on applying CTFE to aircraft hydraulic systems. These two aircraft, currently in the USAF inventory, represent a small fighter and a large cargo/bomber and employ state-of-the-art hydraulic systems.

2.1.1 Rationale For F-15 and KC-10A Selection

There are many reasons for choosing these aircraft which are:

1) Flight Control Actuators of each aircraft include mechanical and electrical control inputs.

2) Iron bird test data is available for both aircraft.

3) Comprehensive performance data exists for both vehicles.

4) Component and system cost, reliability, and maintainability data are available.

5) Life cycle cost models have been developed on both aircraft.

2.1.2 Systems Description and Features

2.1.2.1 F-15 - Hydraulic power for flight control and utility functions is provided by three 3000 psi systems. The systems are Type II, per MIL-H-5440, utilizing MIL-H-5606 fluid with temperature limits of -65°F to +275°F. The F-15 contains approximately 25 gallons of hydraulic fluid.

A functional block diagram of the hydraulic power arrangement is shown in Figure 4. Power Control Systems 1 and 2 (PC-1 and PC-2) supply the primary flight control actuators. PC-2 also provides power to the Control Stick Boost and Pitch Compensator in emergencies. The Utility System powers the remaining subsystems and is automatically switched into the flight control servo-actuators in the event of loss of either PC-1 or PC-2, provided that the loss was not caused by a leak downstream of the switching valve. Figure 5 shows the major components in the F-15.

Resistoflex Dynatube fittings of titanium 6 Al-4V are used where threaded joints are required, in all tube sizes from -4 thru -20. MCAIR-developed Permaswage fittings are used for all permanent joints. Permaswage fittings are fabricated from aluminum for aluminum lines and titanium for titanium lines. The exception is the -12 and -16 size swage fittings, where 21-6-9

corrosion resistant steel is used with titanium tubing, permitting the use of common tooling. Since no unusual cleaning preparations or inspections are required, the swage fitting lends itself to easy field repair.

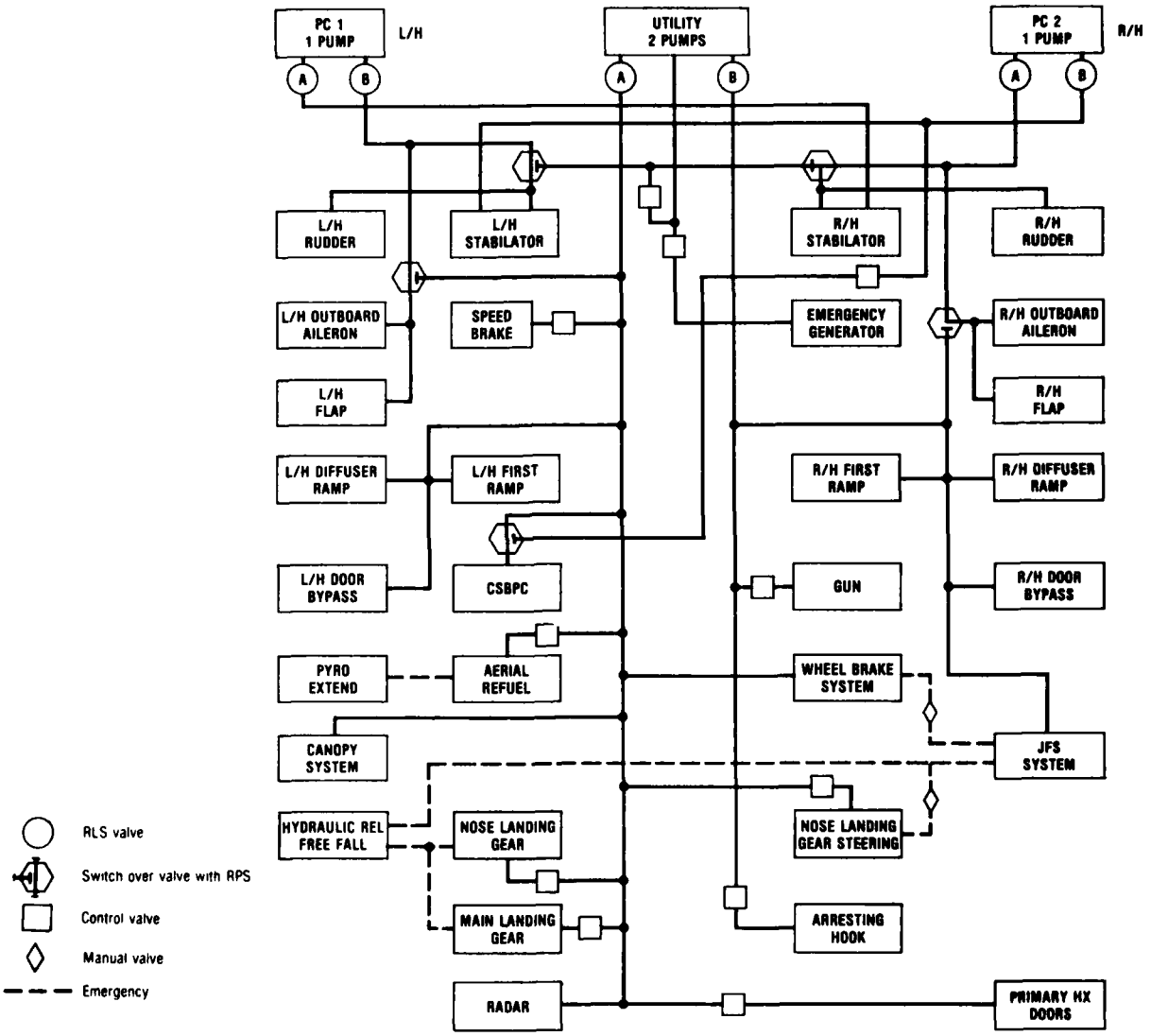

Figure 4.

GP23-0550-124

F-15 HYDRAULIC SYSTEM BLOCK DIAGRAM

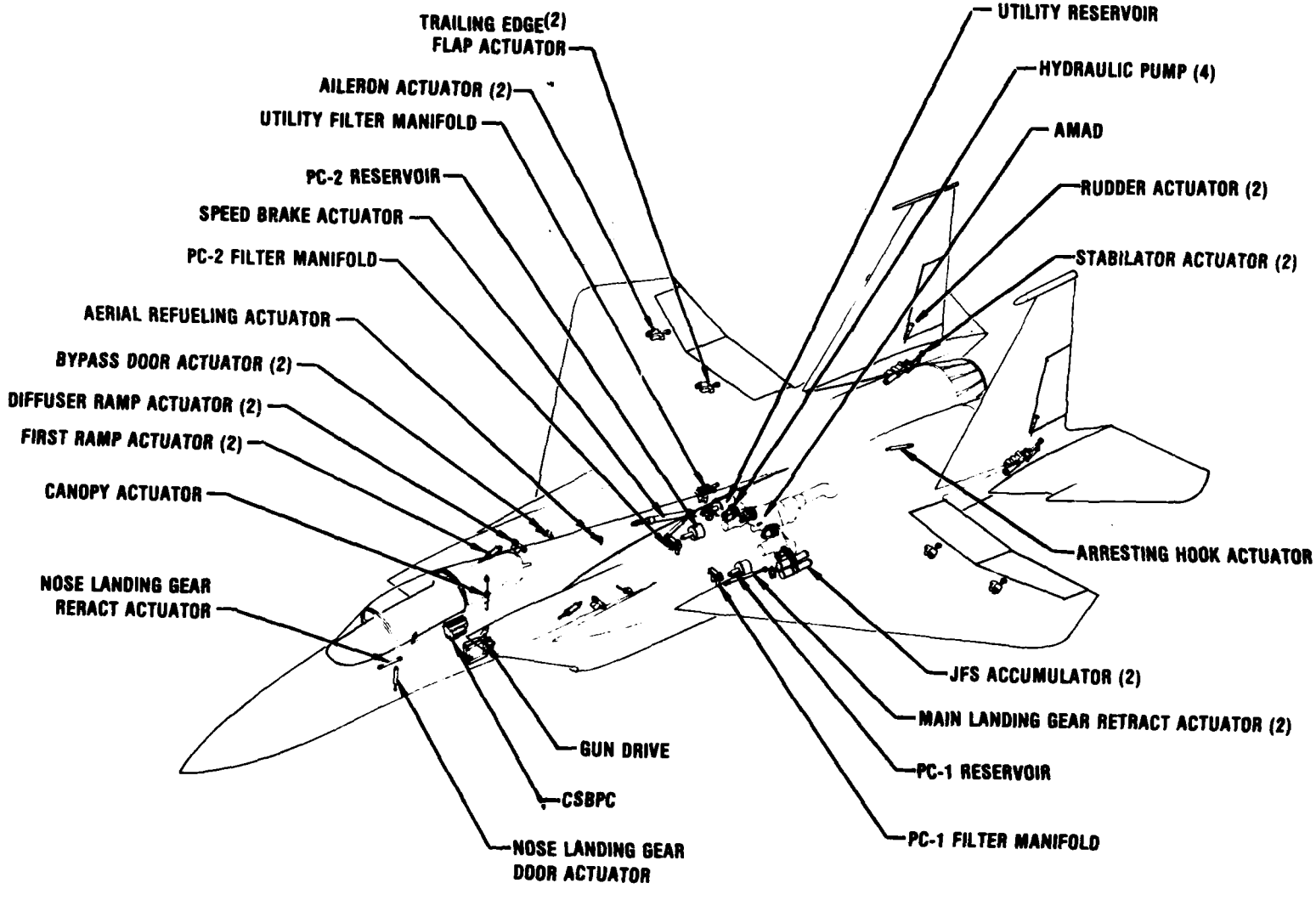

Figure 5.
F-15 HYDRAULIC SYSTEM COMPONENT LOCATIONS

GP23-0550-123

Titanium tubing (Ti-6Al-2.5V) is used for all pressure lines, all -4 return lines, all lines in high temperature or in designated fire bays and all flexure tubes (coils, torsion tubes, etc.). Aluminum tubing (6061 -T6) is used for all return and low pressure lines except as noted above.

Wherever space is available, the lines connecting moving actuators are designed for either torsion or bending motion to provide flexibility. This reduces the number of swivels and flexible hoses. Swivels are utilized only on the speedbrake actuator, the arresting hook actuator, and on the main landing gear for brake line motion. Flexible hoses are utilized on the main landing gear retract actuator, air refueling receptacle lock actuator, the radar system, and the arresting hook actuator.

2.1.2.2 KC-10A - The KC-10A hydraulic system is essentially a DC-10 Series 30 system with additions for the aerial refueling system. A block diagram is shown in Figure 6. The flight control surfaces are shown in Figure 7.

The fluid is Skydrol 500B-4. There are three balanced 3000 psi systems that derive their primary power from in-line engine driven pumps. There is no fluid interconnection between the systems, and no single failure can cause loss of more than one system.

Auxiliary power is furnished by electric pumps. Backup power is supplied by reversible and non-reversible motor pumps. Reservoirs are the bootstrap type and all flight controls are fully powered.

Aerial refueling flight control actuators are fly-by-wire. Aerial refueling pumps are powered by hydraulic servo motors. The hose reel is actuated by a hydraulic motor.

The KC-10A hydraulic system is representative of the latest designs for cargo/passenger aircraft, which have emphasized safety, reliability, maintainability, and low costs. Features include:

- Permanent Permaswage and metal lip seal fittings
- Pump overload thermal disconnects
- Rip-stop construction
- Dual braking, requiring no emergency backup
- Coiled or flexible tubing

- Power transfer units that provide backup power with no emergency switching or interchange of fluid between systems

- Pump pressure resonators

The KC-10A has a large hydraulic system, containing approximately 148 gallons of fluid.

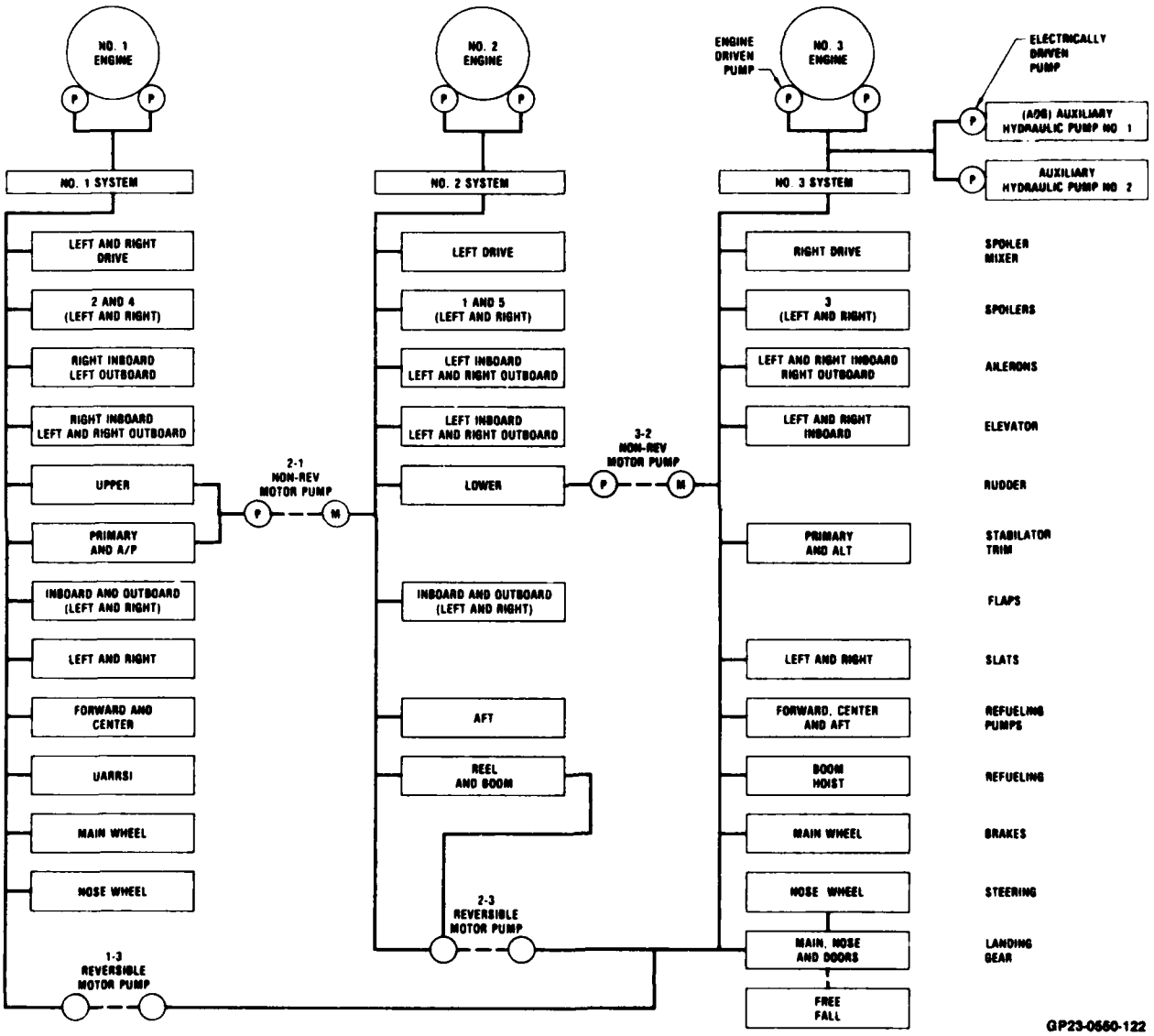

Figure 6.
KC-10A HYDRAULIC SYSTEM BLOCK DIAGRAM

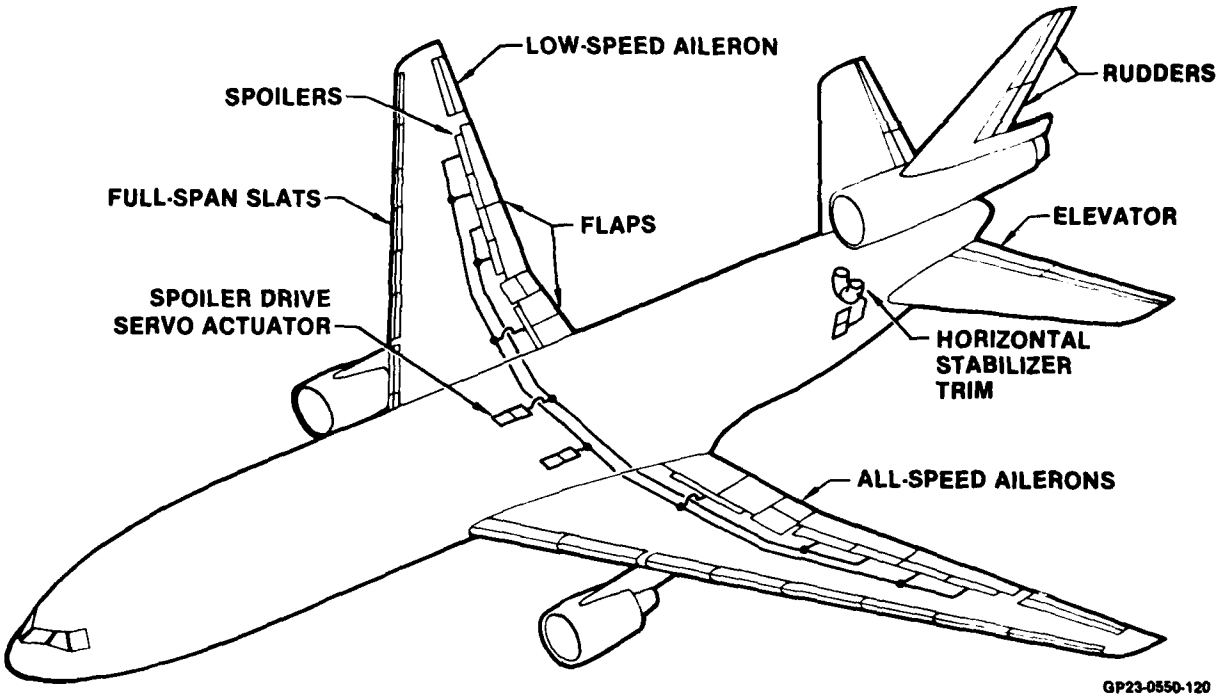

Figure 7.
KC-10A FLIGHT CONTROL SURFACES

2.1.3 Hydraulic System Weight Breakdown - Because the hydraulic systems of the F-15 and KC-10A are based on the most recent technology, they represent excellent design bases from which to initiate the assessment. The effects of incorporating the CTFE fluid and the various advanced concepts and techniques will be compared to these base designs. The baseline weights for each aircraft are shown in Figure 8.

	F-15	KC-10A	
	MIL-H-5606 (LB)	SKYDROL (LB)	MIL-H-5606 (LB)
FLIGHT CONTROL ACTUATORS	221	1,238	1,238
UTILITY ACTUATORS	207	837	837
MISCELLANEOUS COMPONENTS	544	1,593	1,593
DISTRIBUTION SYSTEM	220	1,817	1,817
FLUID	163	1,360	1,075
TOTAL	1,355	6,845	6,560

GP23-0550-121

Figure 8.
CANDIDATE AIRCRAFT HYDRAULIC SYSTEM WEIGHT BREAKDOWN
Baseline 3,000 PSI
F-15 Aircraft Dry Weight = 28,438 Lb
KC-10A Aircraft Dry Weight = 247,735 Lb

2.2 TASK II - IDENTIFY CONCEPTS, APPROACHES AND/OR FLUID MODIFICATIONS

2.2.1 Concepts/Approaches

2.2.1.1 Search and Results - A survey to find weight savings ideas for future aircraft hydraulic systems was conducted. Some initial concepts were identified as follows:

1. Increased Hydraulic System Pressure
2. Pressure Intensifier
3. Waterhammer Attenuators
4. Load Recovery Valves
5. Nonlinear (Pressure or Flow Gain vs Valve Stroke) valves
6. Force Motors (Direct Drive Valves)
7. Reduced Proof, Burst and Transient Pressure Factors for High Pressure Hydraulic Components and Systems

Other ideas which came from the survey are:

8. Elimination of return filters
9. Titanium Barrel Actuators
10. Metal Bellows Reservoirs and Accumulators
11. Fast Response solenoid valves for controlling flight control actuators open loop

2.2.1.2 Description and Discussion

2.2.1.2.1 Higher Pressure - The use of higher system pressures is the key to reducing weight. Pressures up to 10,000 psi were considered.

2.2.1.2.2 Force Motors - Recent developments in force motor technology invite consideration. Its potential advantages over electrohydraulic valves when used at pressures above 3000 psi include energy conservation, low weight, and low cost.

Advanced force motor designs, which drive flight actuator control valves directly, were evaluated. Previous studies have shown that the force motor concept will reduce cost, space, weight, and maintenance, while maintaining performance and improving reliability, LCC, Electro-Magnetic Interference/ Electro-Magnetic Pulse (EMI/EMP) tolerance, and Built In Test (BIT) capability.

The recent trend towards fly-by-wire control systems makes the multichannel force motor concept most attractive. With multiple coils, it provides an excellent interface with redundant electronics, eliminating electrohydraulic valves (EHV) and dependence on hydraulic energy for flight control redundancy.

Studies show that the direct valve driver force motor can eliminate several components, Figure 9. A life cycle cost study was conducted for force motor application on the F-18. Weight could be reduced 93 pounds, with significant cost savings (see Figure 10).

Several viable concepts are in hardware development; some involving permanent and nonpermanent magnets. All permanent magnet concepts use samarium cobalt magnets. The following companies are actively developing hardware as noted.

Ledex Inc.	-	rotary and linear units, permanent and nonpermanent magnets
Moog	-	rotary and linear units, permanent magnets
Bertea	-	rotary and linear units, permanent magnets
National Water Lift	-	rotary units, permanent magnets
Hydraulic Research	-	proprietary development
Abex	-	proprietary development

Earlier hardware developments funded by the Air Force Flight Dynamics Laboratory and the Navy under its Lightweight Hydraulic System (LHS) program do not appear to be competitive in weight and performance.

Single and two stage control valves driven by force motors have been tested and both have application, depending on the chip shearing force needed and the importance of the surface-to-aircraft control.

The force motor eliminates the high heat rejection associated with EHV's at higher pressures. In addition, the industry is recognizing other benefits:

- Higher reliability and maintainability
- Weight and cost savings
- EMI/EMP tolerance (forward control loop)

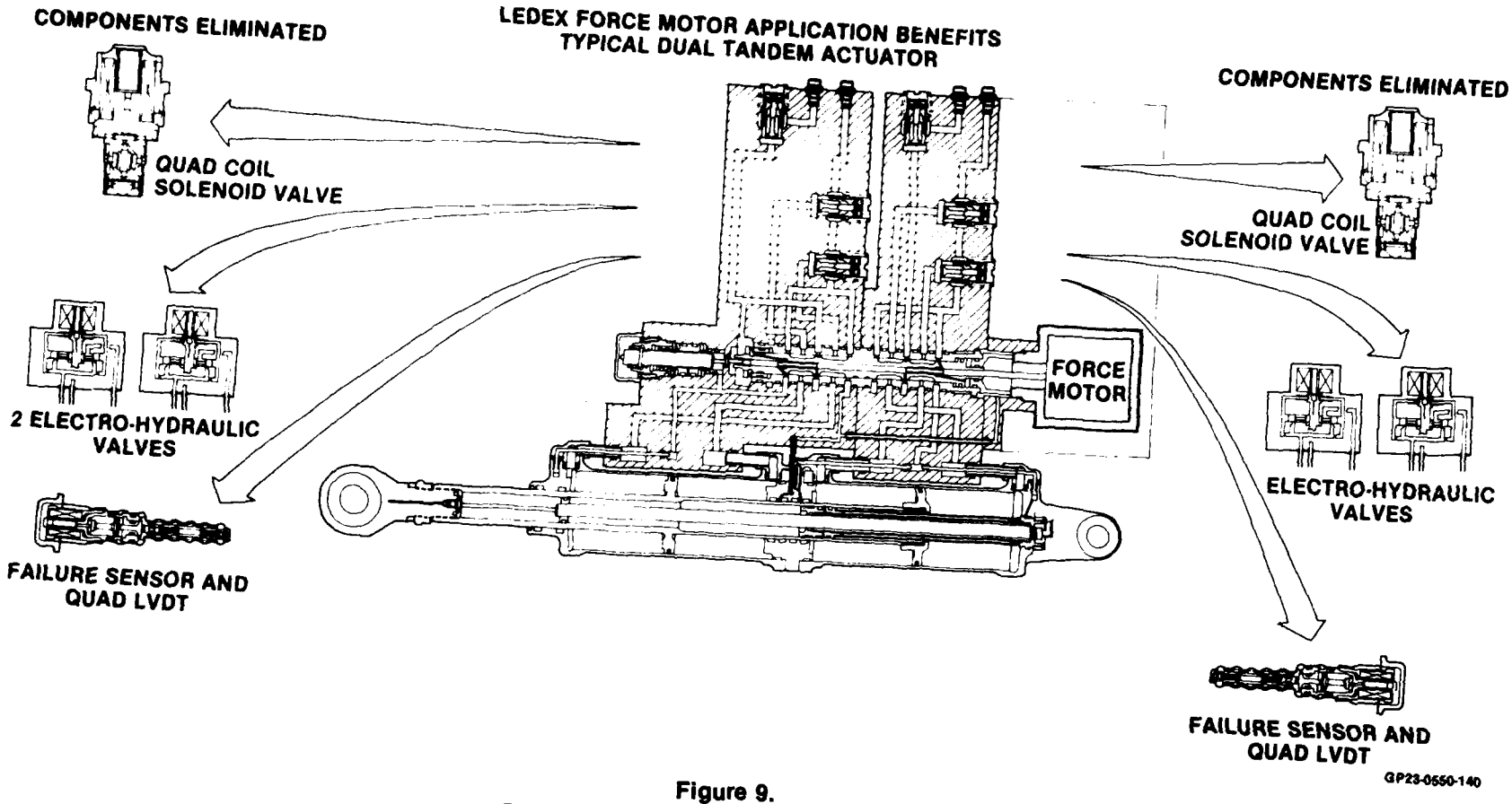

Figure 9.
DIRECT VALVE DRIVER DEVELOPMENT
FOR FLIGHT CONTROL ACTUATORS
MCAIR - Ledex Inc. Cooperative Effort

NON-COST IMPACT

- **NET WEIGHT REDUCTION - 93 LB/AIRCRAFT**
  - ELIMINATED
    - 14 SOLENOIDS
    - 48 RELAYS
    - 10 FAILURE SENSORS
    - 312 WIRES (12,500 FT)
    - 24 ELECTRO-HYDRAULIC VALVES (EHVs)
    - 19 LINEAR VARIABLE DIFFERENTIAL TRANSFORMERS (LVDTs)
    - GREATLY SIMPLIFIED HYDRAULIC MANIFOLDS
    - REDUCED HYDRAULIC SYSTEM HEAT REJECTION - 50% (10-12 HP)
- **VULNERABILITY - SLIGHT REDUCTION DUE TO AREA REDUCTION**
- **TOTAL CONTROL SYSTEM POWER REDUCTION - 250 WATTS (83%)**
- **EMI/EMP TOLERANCE - SIGNIFICANT IMPROVEMENT**

COST SAVINGS

- **$60M (800 AIRCRAFT), 10 YEAR BUILD-UP PLUS 10 YEAR OPERATION**

GP23-0550-141

Figure 10.
LIFE CYCLE COSTS STUDY
FORCE MOTOR APPLICATION ON F-18
Preliminary Conclusion

It is anticipated that the force motor will be a part of most future CTFE fluid development programs.

2.2.1.2.3 Energy Conservation

a) Pressure Intensifiers - Pressure intensifiers can be used to reduce fluid volume, which will reduce weight. The conventional system (Figure 11) uses a no load pressure drop distribution of 1/3-1/3-1/3. One-third of the pressure is lost in the pressure side of the distribution system. Another one-third is lost in the control valve and manifold. The last one-third is lost in the return side of the distribution system.

It must be emphasized that the performance envelope plotted is simply the locus of an infinite number of constant hinge moment and rate capability combinations. In the real world the hinge moment, and consequently the rate, are constantly changed as a control surface is moved from one position to another. For example, referring to Figure 11, if the control surface is moved from point A to point B at maximum rate, the "real world" average rate can be determined by integrating between the two points. For the example noted the average rate is approximately the same as the no load rate.

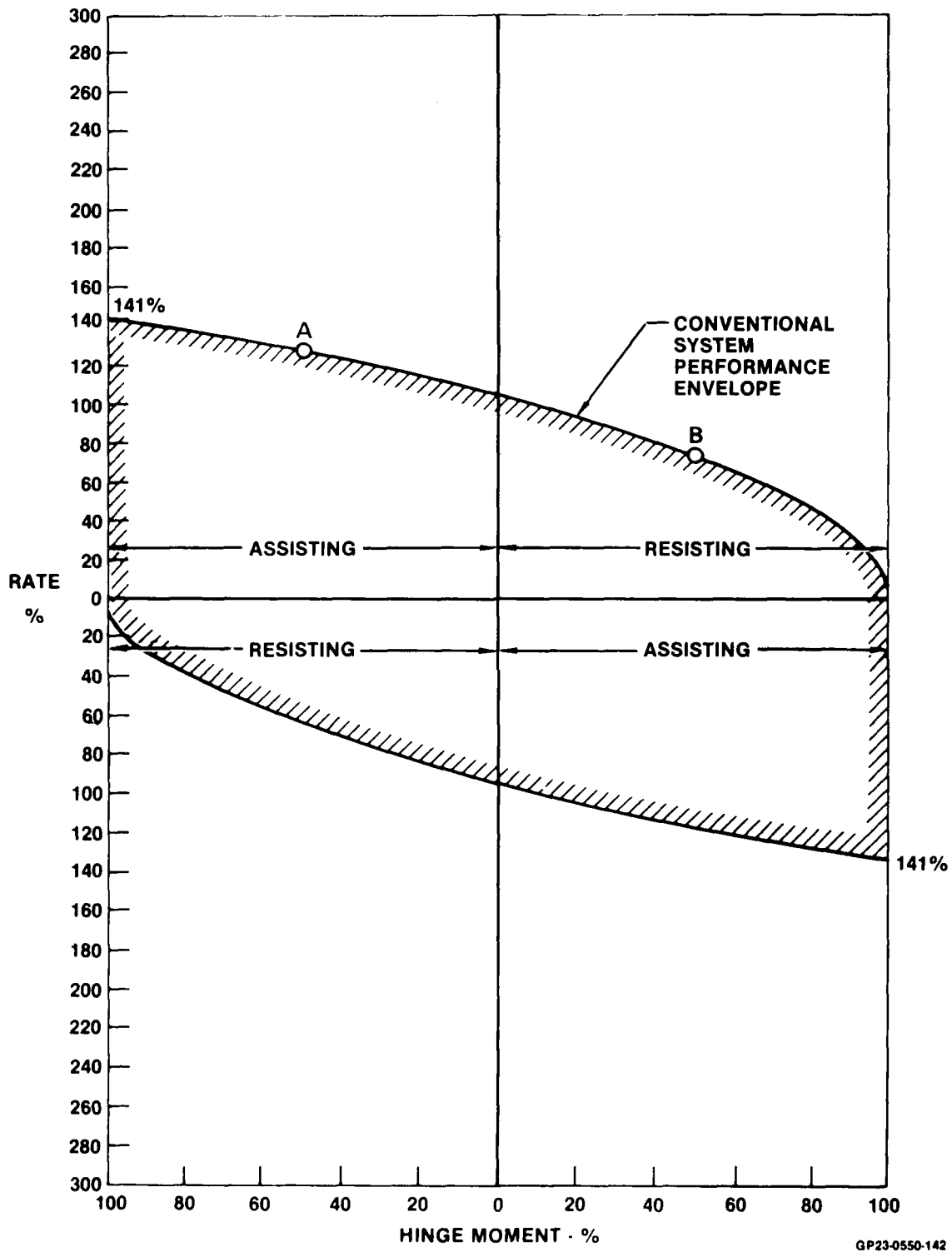

Figure 11.
FLIGHT CONTROL SUBSYSTEM
PERFORMANCE - RATE vs HINGE MOMENT

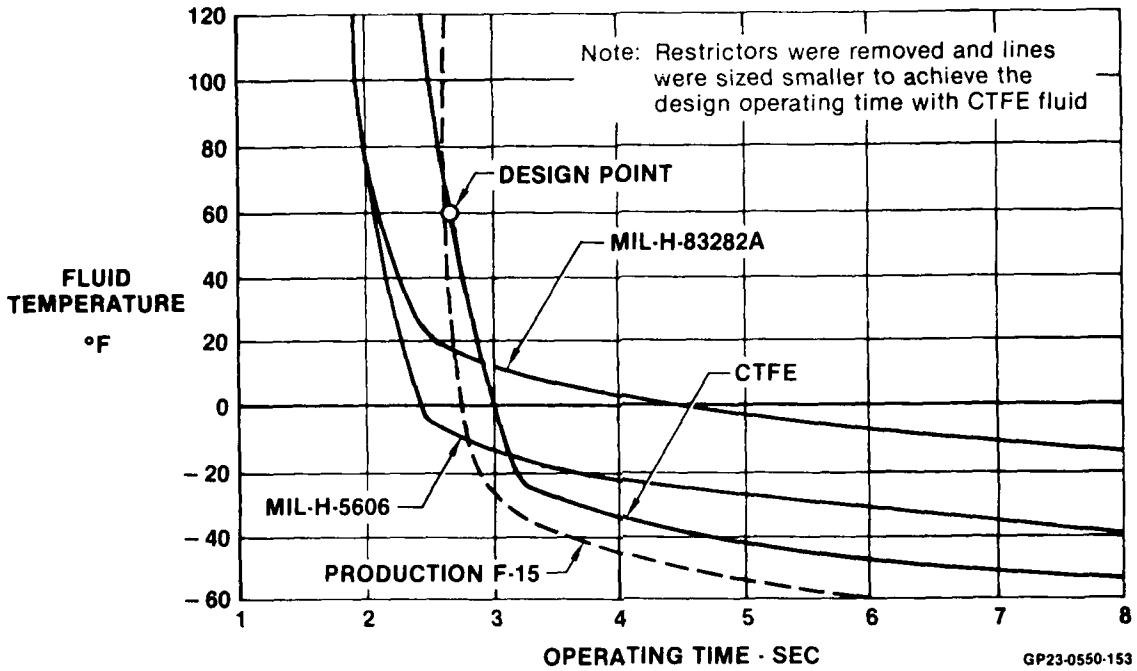

Figure 23.
F-15 MAIN LANDING GEAR ACTUATOR OPERATING TIME vs FLUID TEMPERATURE

2.2.1.2.7 Water Hammer Control (Flight Controls)

a) Water Hammer Attenuator - MCAIR has demonstrated the use of a water hammer attenuator which has a fast acting valve responsive only to rapidly rising pressure. The attenuator is connected to the actuator pressure and return lines as close to the actuator control valve as possible. Ideally, it is integrated in the actuator manifold. In use, the attenuator provides an alternate path for the fast moving inlet fluid when the control valve is rapidly closed after the actuator has achieved high velocity. The attenuator opens its valve in response to the initial portion of the rapid pressure rise, then gradually closes as the fluid column is decelerated, but closes quickly if the actuator control valve reopens, as during actuator reversal.

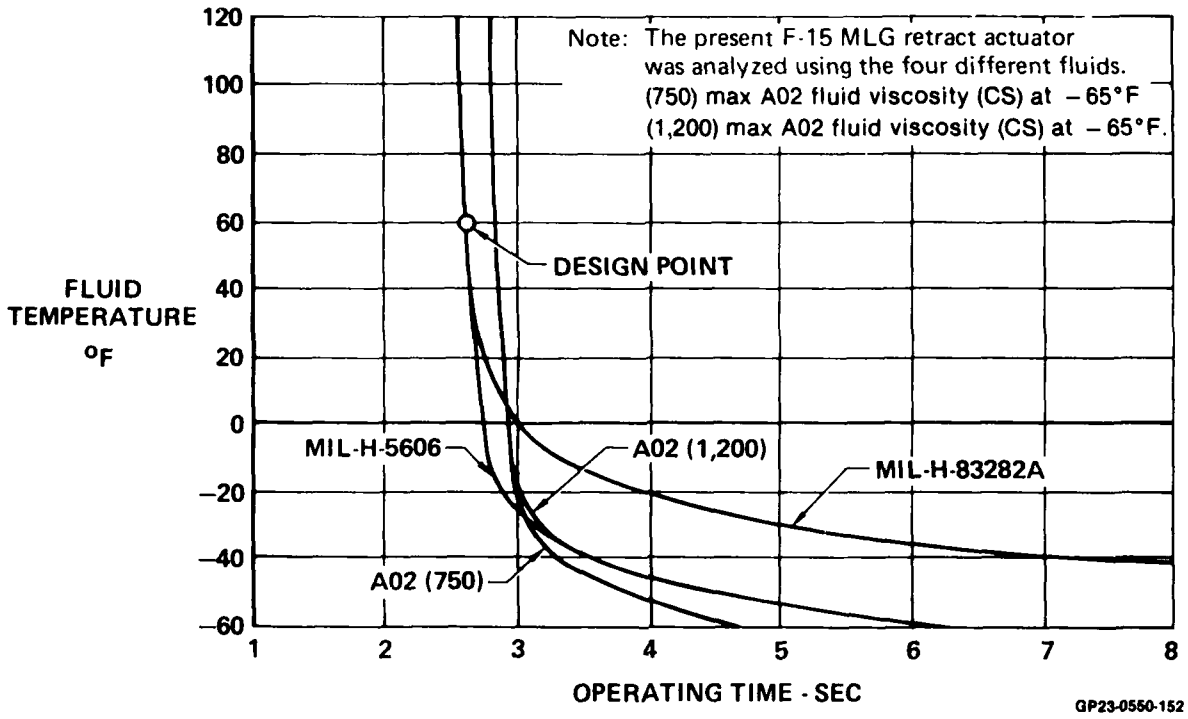

Figure 22.

F-15 MAIN LANDING GEAR ACTUATOR OPERATING TIME vs FLUID TEMPERATURE

For the CTFE A02 fluids the operating time was approximately 0.2 second slower (2.8 vs 2.6 seconds) at the design point of 60°F. However, the cold temperature operating times (-30°F and below) were better than the MIL-H-5606 production configuration. The higher viscosity MIL-H-83282 fluid shows unacceptable low temperature performance if the production system performance is required at -20°F, for example.

The F-15 main landing gear system was resized to eliminate the restrictors and meet the performance design point with CTFE fluid. The performance of MIL-H-83282, MIL-H-5606, and Skydrol 500B was evaluated in a "drain and fill" analysis. Figure 23 presents the results. Only the CTFE A02 fluid (750 cs at -65°F) gives performance that could be considered acceptable.

Additional analysis was conducted to complete the evaluation of this concept.

2.2.1.2.5 "Odd-Even" Distribution System - In general, the approach used on current 3000 psi systems and the Navy LHS system is to develop tubing for the pressure side of the system. Then this tubing is used on both the pressure and return sides of the system with some exceptions. This approach results in no problems with thin wall tubing. However, significant weight savings (10-20%) is expected to accrue at higher pressures if thin walls are used on the return side. The potential savings motivates "murphy proofing" or eliminating inadvertent use of the thin wall tubing on the pressure side.

The "odd-even" distribution system refers to an approach to "murphy proofing". Even tubing dash numbers (-4 is 1/4 inch dia., -8 is 1/2 inch dia., etc.) is used predominately in current designs. The odd dash numbers (5 is 5/16 inch dia., -7 is 7/16 inch dia., etc.) are not generally used.

Therefore it is proposed that 3000 psi even dash number tubing be used as return side tubing in a higher pressure system. The pressure side would then use odd dash number thick wall tubing developed as necessary. All components and fittings would be set up accordingly. Such an approach would seem reasonable for production of aircraft. For in-service repair some quality control might be required.

2.2.1.2.6 Control Restrictor Elimination - Utility Functions - For most utility functions using conventional fluids, restrictors are required in order to achieve an acceptable operating time at low fluid temperatures (-40°F to 0°F). A significant portion of the energy available is dropped in the restrictor (pressure drop sensitive to density changes only), and much larger lines (pressure drop sensitive to viscosity and density) are required. The result is higher system weight.

The A02 CTFE fluid has much lower kinematic viscosity than other fluids currently in use. The possibility exists that the CTFE fluid can provide acceptable low temperature operating speeds without restrictors.

The F-15 main landing gear subsystem was used in a preliminary analysis. Figure 22 presents subsystem performance, operating time vs fluid temperature for MIL-H-5606, MIL-H-83282, and the CTFE A02 fluids. Two CTFE A02 fluid viscosities were considered, 1200 and 750 centistokes (CS), at -65°F. In each case the subsystem was "filled" with that fluid desired and the performance analyzed.

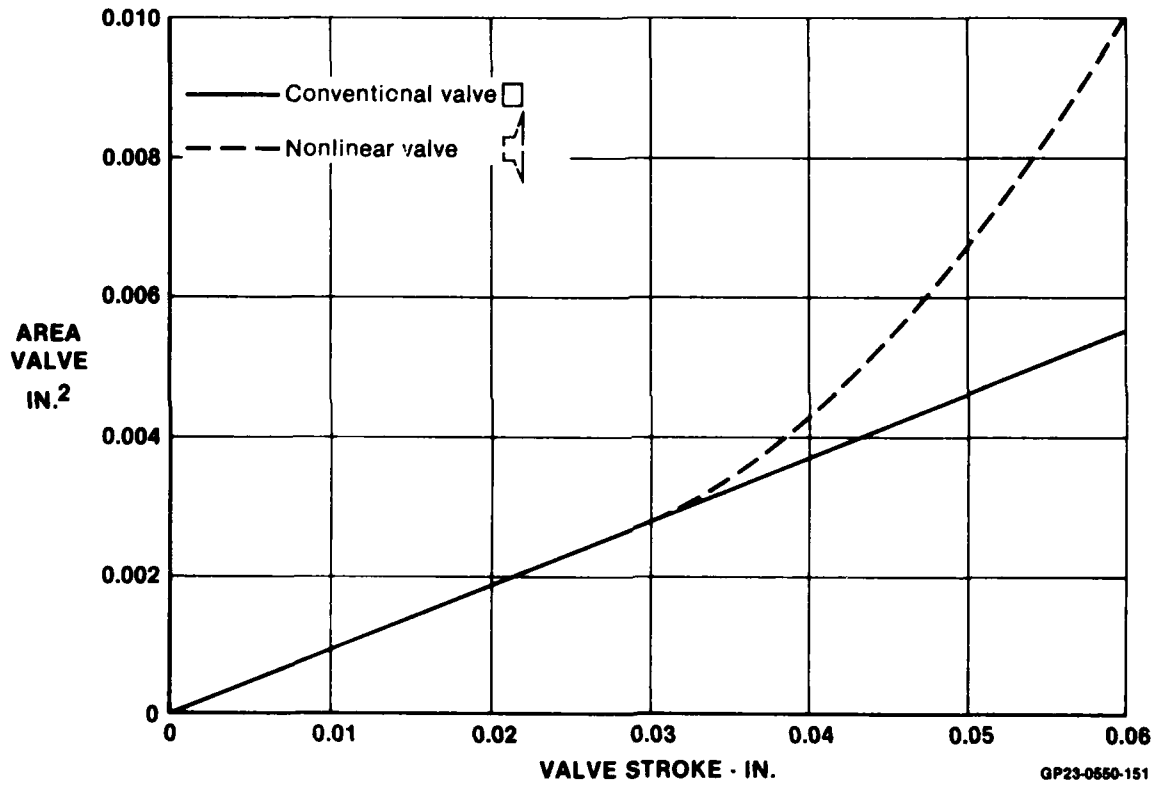

Figure 21.
F-15 R/H STABILATOR ACTUATOR
VALVE AREA vs STROKE

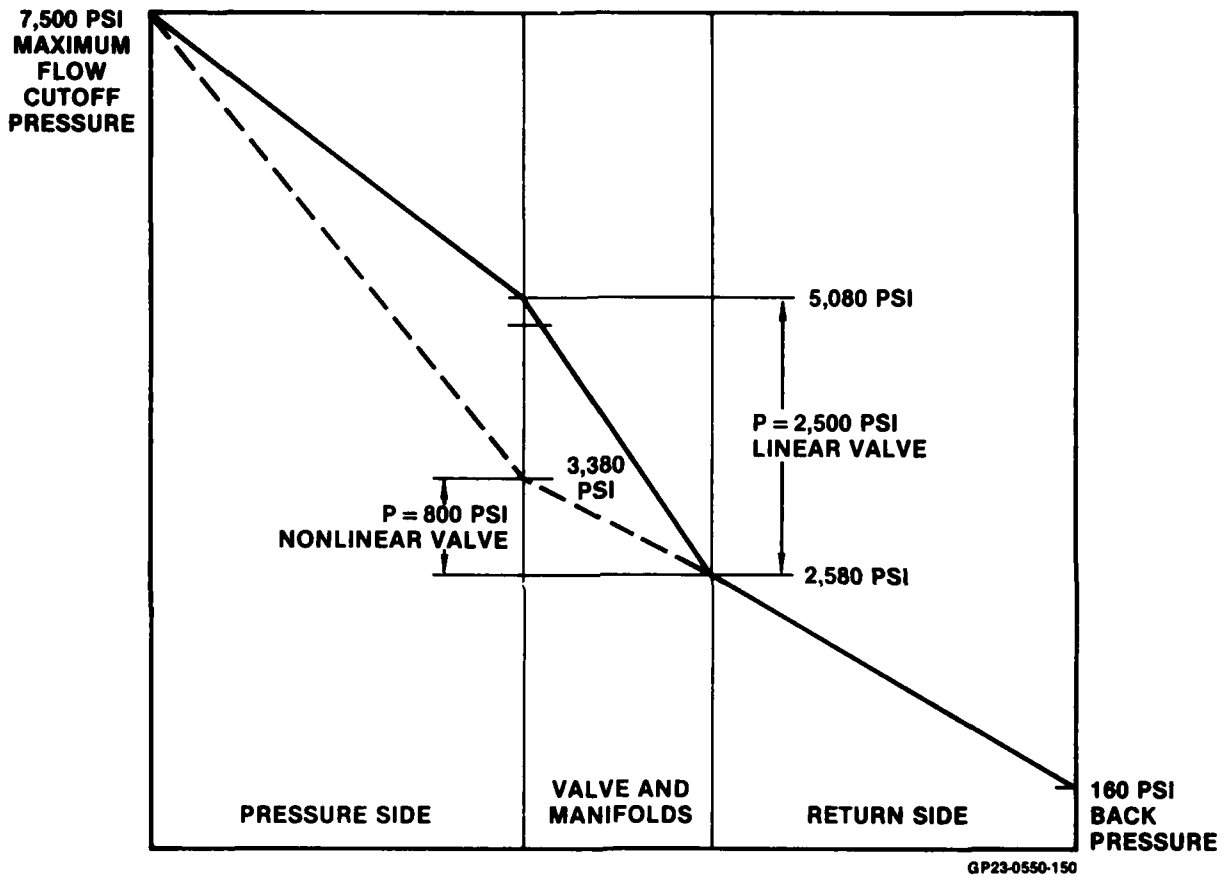

Figure 20.

PRESSURE LOSS DISTRIBUTION - FLIGHT CONTROL SUBSYSTEM

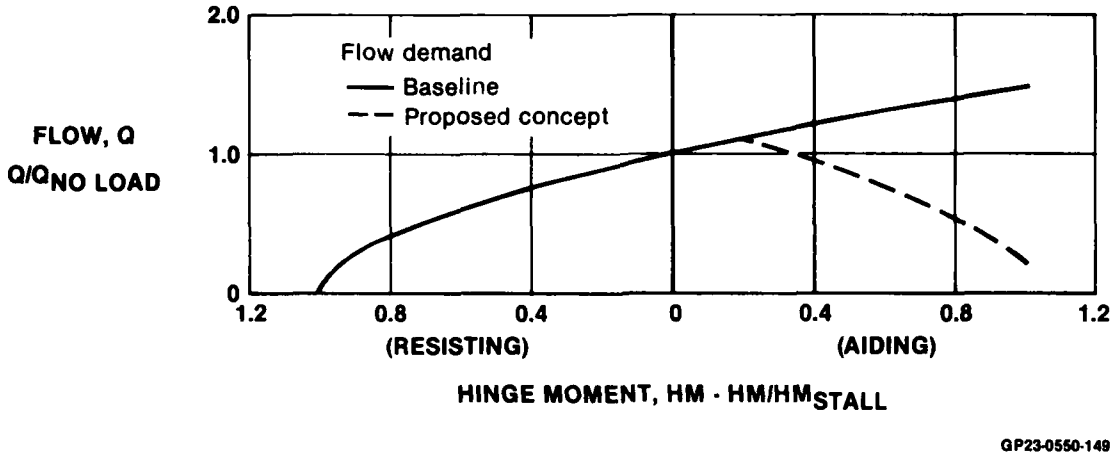

Figure 19.
LOAD RECOVERY VALVE PERFORMANCE EVALUATION
Flow Demand

Another important benefit of the modified distribution of system pressure as shown in Figure 20 is a lower base pressure from whence the transient due to water hammer propagates.

For a given water hammer transient, the peak can be reduced by approximately the difference between the valve inlet pressures. (5080-3380 = 1700 psi.)

There are an infinite number of ways to nonlinearize a control valve. The approach being evaluated is presented in Figure 21.

The conventional valve with the square or rectangular metering slot provides a linear increase in flow area (and flow) for a given pressure drop across the valve. The nonlinear approach chosen provides a linear increase in flow area (flow) for one-half the valve opening stroke. Beyond that point the flow area is increased nonlinearly, as defined by the dotted line in Figure 21. At maximum opening the pressure drop for a given flow is about one-fourth that of the linear conventional valve. It is expected that the nonlinear approach selected can reduce energy loss without affecting dynamic performance.

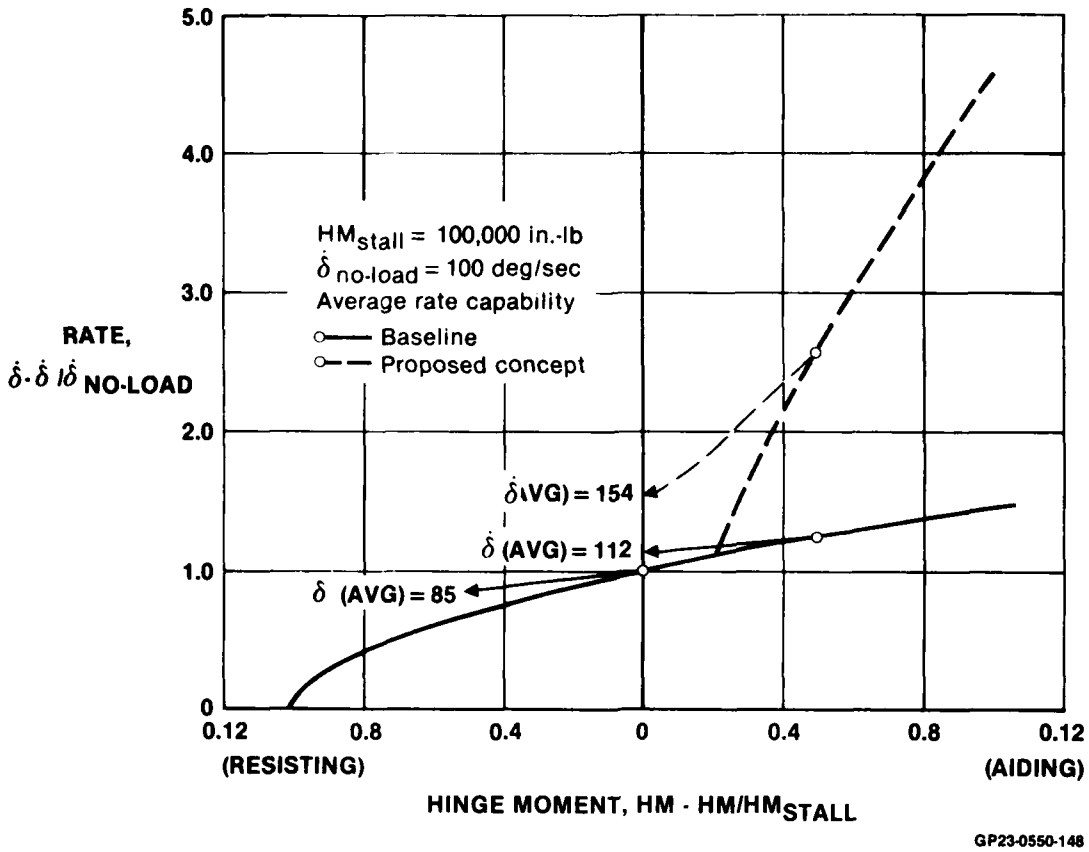

Figure 18.
LOAD RECOVERY VALVE PERFORMANCE EVALUATION
Average Rate Capability

The LRV concept can thus permit smaller displacement pumps and distribution lines. Accessory drive power requirements are reduced and the total system will be lighter and more efficient.

Preliminary development testing has produced generally positive results to date.

2.2.1.2.4 Nonlinear Control Valves - The nonlinear control valve concept can be used to assign more pressure drop for line loss. The result is smaller lines, less fluid volume, and lighter distribution systems.

The distribution for nonlinear valves is presented in Figure 20 for an 8000 psi system. All of the pressure drop available for line loss due to nonlinear valve usage was arbitrarily assigned to the pressure side of the distribution system in Figure 20. It could have been split between pressure and return, etc.

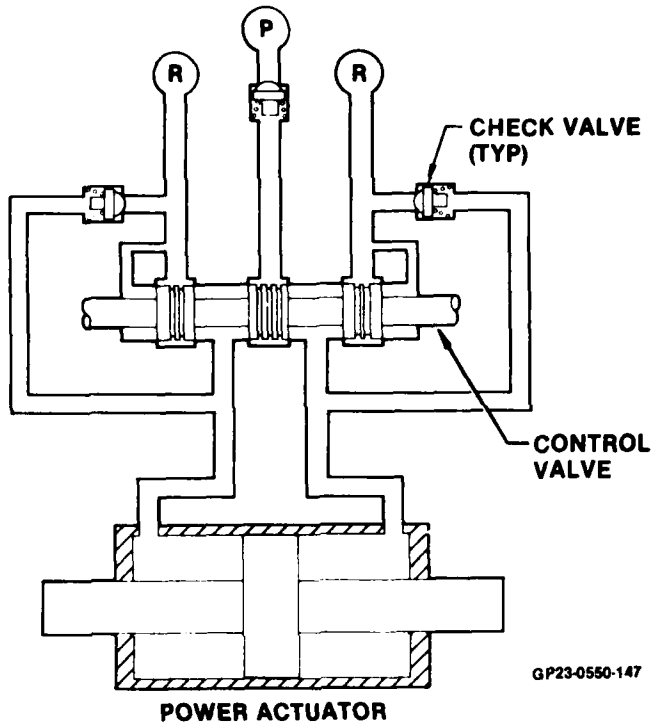

Figure 17.
LOAD RECOVERY VALVE SCHEMATIC

The effect of the LRV on the average rate capability is shown in Figure 18. In this example, with the LRV concept, the average rate at which the control surface can be deflected between neutral (no-load) and a position with 50% of maximum aiding load is 154 deg/sec. This compares to an average rate capability of 112 deg/ sec for the unmodified actuator; an increase of 37.5%. For a half-cycle, in which the surface is deflected from neutral to 50% of maximum load and returned to neutral, the average rate capability improves from 96.6 deg/sec to 109.5 deg/sec.

The analytical technique for determining average rate characteristics and relating them to actuator performance is presented in Reference 1.

The effect of the LRV on flow demand is shown in Figure 19. The peak flow demand for the baseline circuit (at 100% aiding load) is 146% of the maximum no-load flow demand. With the LRV concept, for the same actuating circuit, the peak flow required is 110% of the no-load flow.

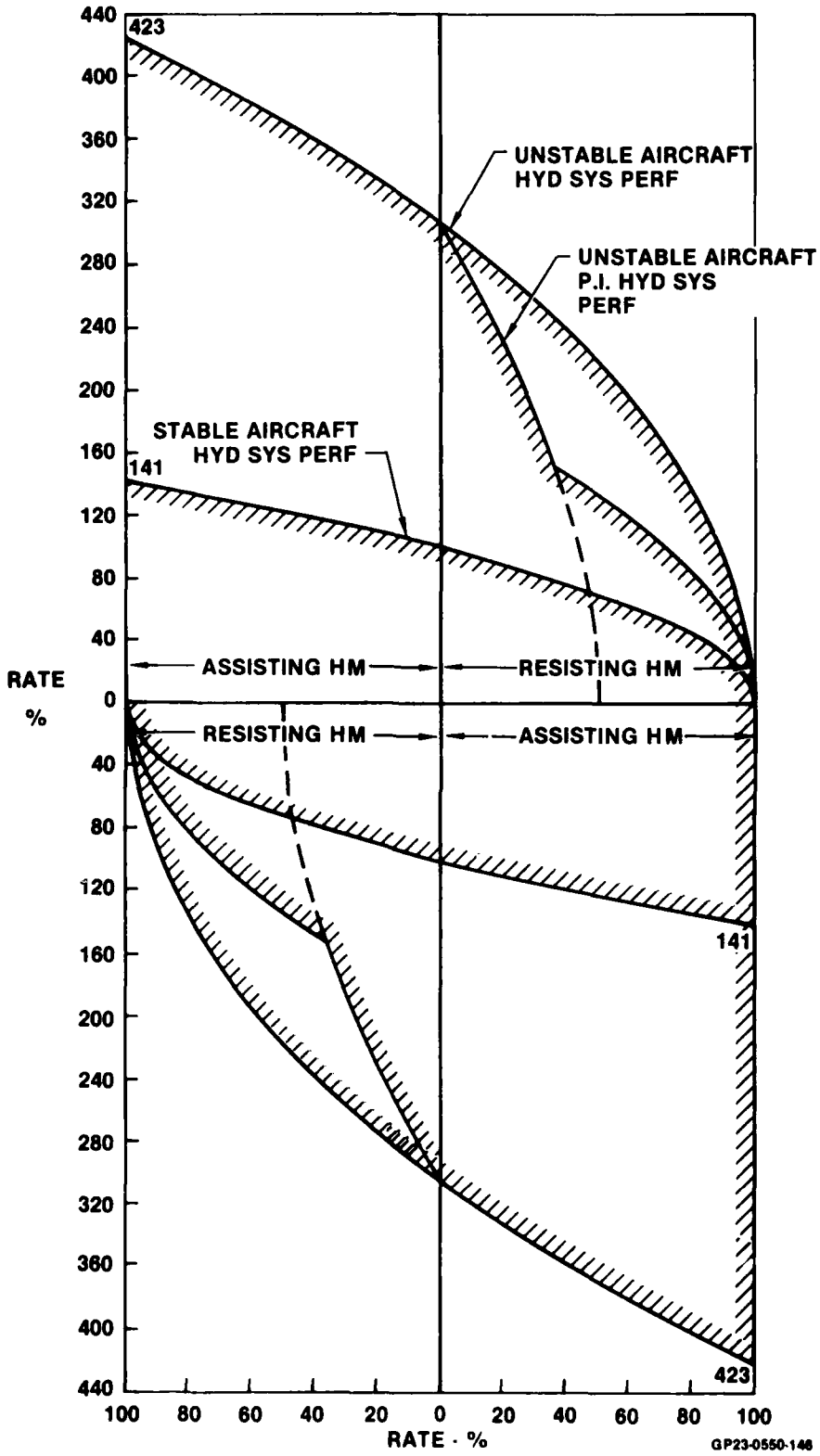

Figure 16.

PERFORMANCE COMPARISON STABLE vs UNSTABLE AIRCRAFT

Pressure Intensifier Benefits Shown

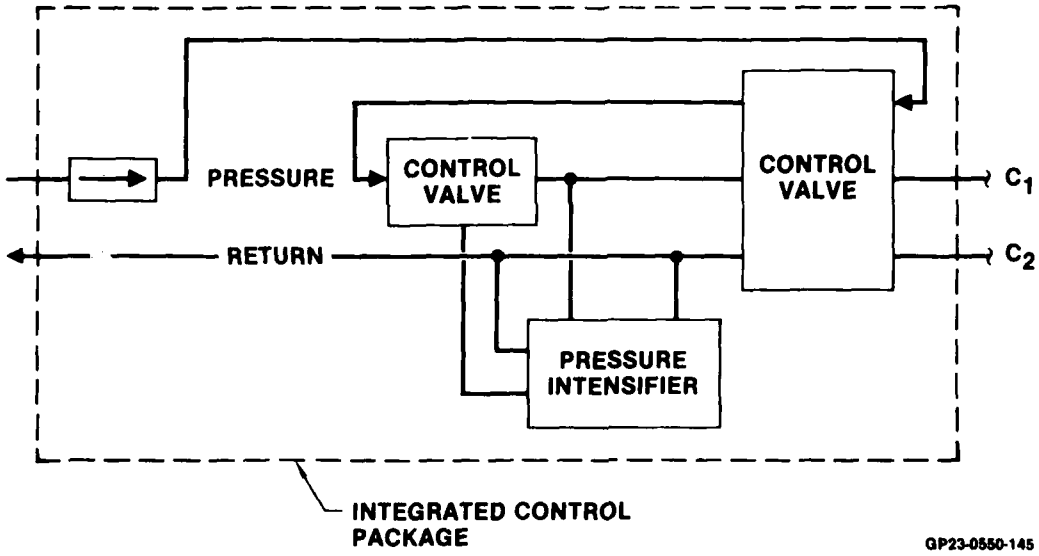

Figure 15.
PRESSURE INTENSIFIER UTILITY APPLICATION

b) Load Recovery Valve - Inflight control system pumps are used to avoid cavitating the pressure side of a power actuator when aiding loads supply the motive force. A typical pressure-compensated pump extracts power from the accessory drive to supply flow demand with an assisting load, just as if the hydraulic system were performing the work on the control surface.

To avoid this wasted energy, a Load Recovery Valve (LRV), Figure 17, can be used to convert the energy of the assisting load to useful work to supply the power actuator flow demand.

The performance improvement and power reduction that can be expected from the LRV concept is illustrated in Figures 18 and 19. Vehicle performance, as measured by response to flight control commands, is related to the time required for the surface to deflect to a new position. The actuating time is determined from the average rate capability of the circuit.

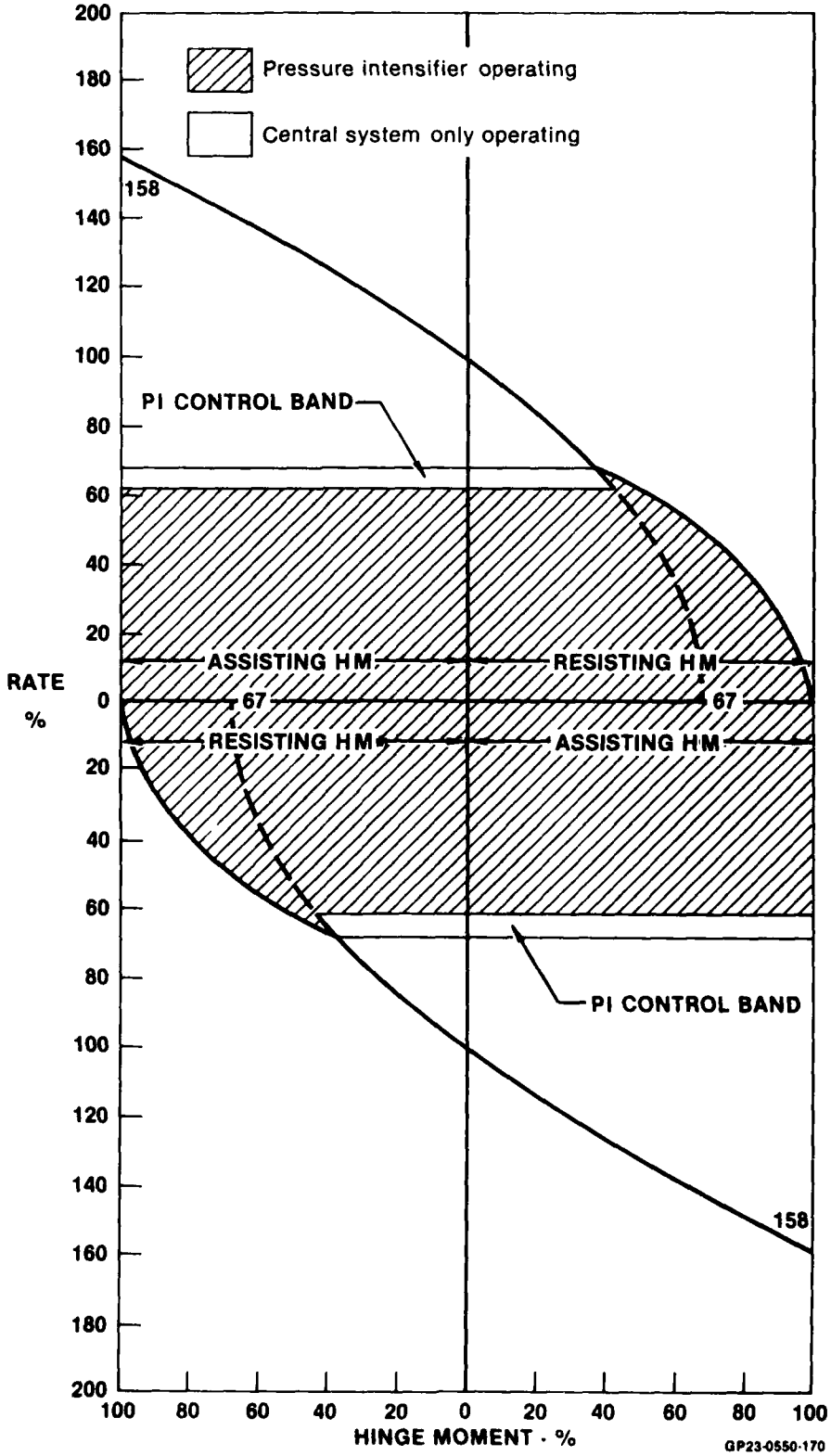

Figure 14.
CENTRAL SYSTEM vs PRESSURE INTENSIFIER AREAS OF PERFORMANCE RESPONSIBILITY

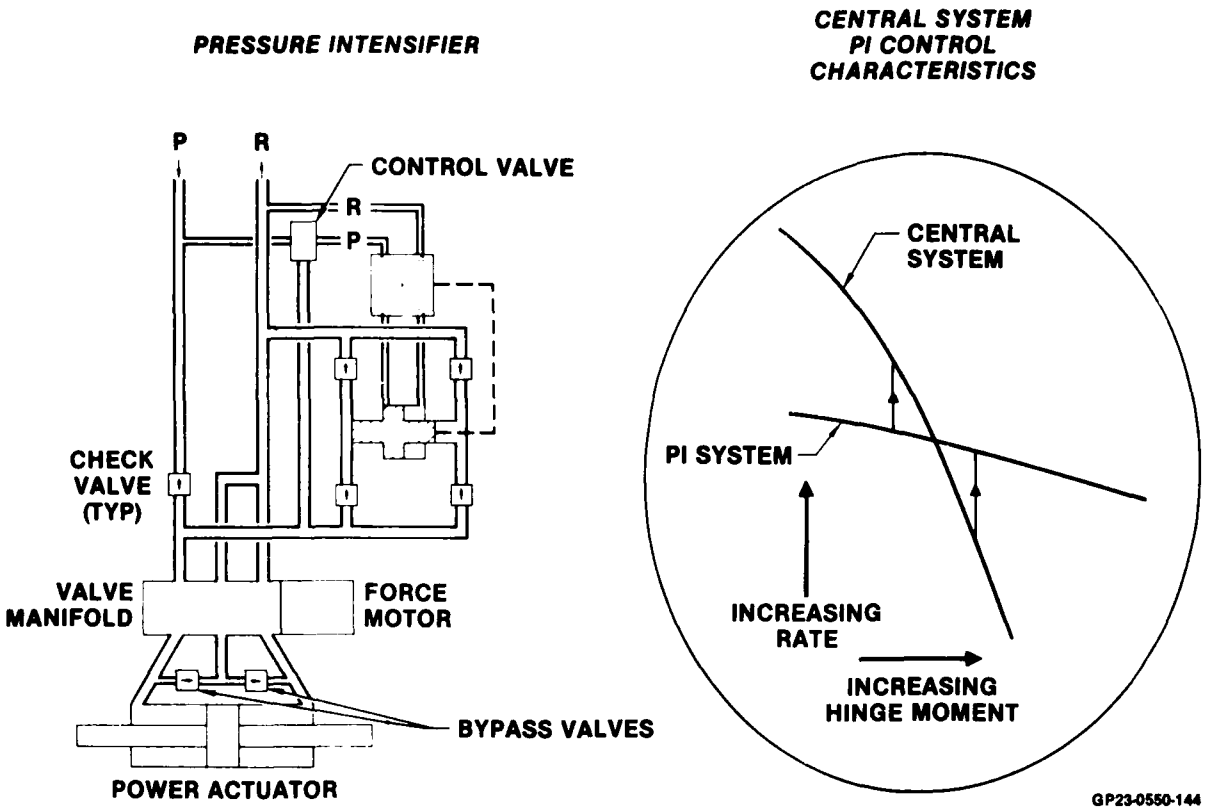

Figure 13.
PRESSURE INTENSIFIER (PI) INSTALLATION AND CONTROL CHARACTERISTICS

Control surface rate requirements can increase significantly for so-called unstable aircraft, possibly three to five times. If the stall hinge moment stays the same, the increase in hydraulic horsepower is directly proportional to the increase in rate. For example, the F-15 Power Control systems have a peak output of about 85 HP. The three times increase in rate could result in a peak requirement of 255 HP. Pump displacement would increase from 3.1 CIPR to 9.3 CIPR. Line sizes would increase dramatically. The system weight would at least double.

A 2:1 intensifier could be the answer if it covers the higher rate requirement. The horsepower increase would be held to 50%. Figure 16 presents a rate vs hinge moment plot showing the benefits of using an intensifier.

The assisting load-rate area, as well as the resisting area, must also be seriously evaluated for energy control. The energy demands of a conventional system can be 141% of no load, as shown in Figure 16. The use of asymmetri istribution systems and non-linear valves, in conjunction with load recovery valves, can limit peak power demand to 110% of no load. (See Sections 2.2.1.2.4, 2.2.1.2.5, and 2.2.1.2.3b).

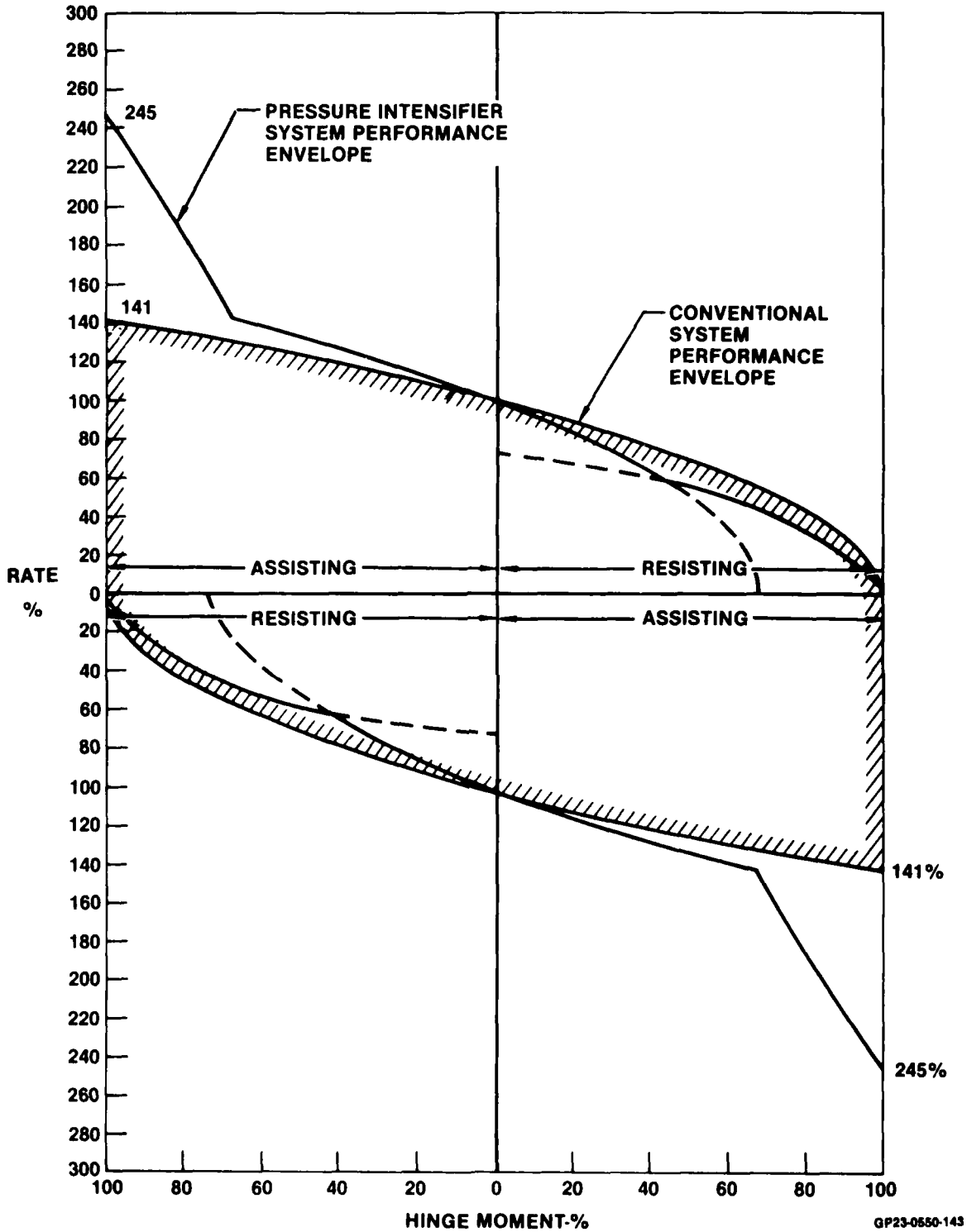

Figure 12.
PRESSURE INTENSIFIER FLIGHT CONTROL SUBSYSTEM PERFORMANCE
Rate vs Hinge Moment

Figure 12 presents the typical flight control performance capability for a system using a pressure intensifier. The pressure intensifier system was set up around the two-thirds hinge moment requirement. The actuator area was reduced to two-thirds of the required hinge moment. The ratio of the intensifier motor to the pumping area is 1.5:1.0, so that at stall the central system pressure is amplified one and one-half times so the maximum hinge moment requirement is met.

The change in performance is shown in Figure 12. There are two obvious conclusions. In the resisting load direction, some capability is lost. However, in the assisting direction, rate capability is significantly increased beyond 66% assisting hinge moments. This is due to an optimization of anticavitation (load recovery) valves to eliminate actuator ram cavitation.

If the lower capability in the resisting direction is acceptable, the intensifier has significant potential for weight reduction.

As presently planned, the intensifier operation would be controlled by pressure sensing at the pressure intensifier. At actuator null and rates up to 67% of maximum no load rate, the intensifier would be operative maintaining one and one-half times system pressure.

Figure 13 presents the typical intensifier flight control installation and a control approach. The control approach is based on the intersection of the central system performance and intensifier performance, at a defined hinge moment. This pressure point could be about 80% of central system rated pressure. Therefore, for an 8000 psi system, at any pressures sensed at the intensifier above approximately 6400 psi, the intensifier would be operating. For rates below 67% and at null the intensifier then would be operative as shown in Figure 14 performance map.

For utility functions such as the landing gear and speed brake the intensifier will be operative only when the function control valve is commanding an operation.

Figure 15 presents an integrated control valve/intensifier concept. The pressure can be routed through the main control valve in such a manner that pressure for intensifier operation is not available except during function motion.

The charging orifice, Figure 24, allows chamber pressure to equal supply pressure during steady state, but limits the rate of chamber pressure rise when a fast rising transient occurs. If the transient pressure rise continues until supply pressure is enough above chamber pressure to overcome the spring force, the valve opens and ports fluid to return. When supply pressure less chamber pressure is insufficient to overcome spring force, the valve closes. When supply pressure begins to fall below chamber pressure, the check valve opens and chamber pressure follows supply pressure down, so the valve is ready for the next transient.

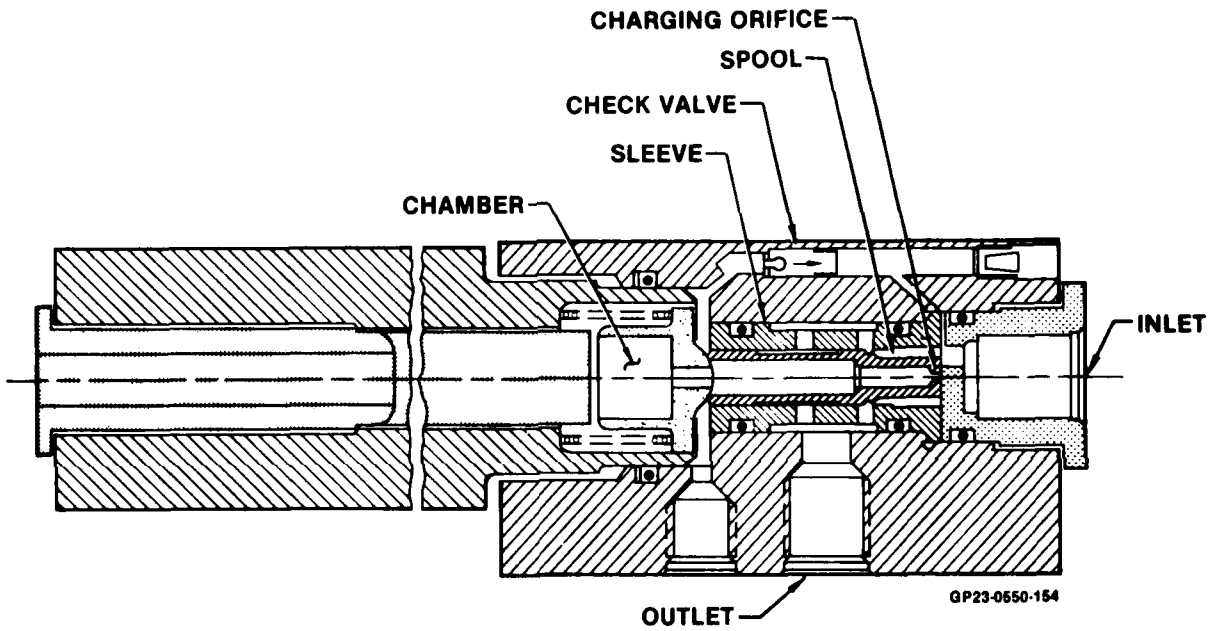

Figure 24.
DEVELOPMENT VERSION OF WATER HAMMER ATTENUATOR

A drop in supply pressure when the actuator is moving rapidly is an inherent characteristic in most installations. The ability of the attenuator to track supply pressure down allows it to begin arresting a rising pressure at an early state so that in cases such as shown in Figure 25, the transient can be arrested at the attenuator before it reaches system pressure. In the case shown, the attenuator was 4 feet upstream from the actuator control valve so the transient, which started at the actuator, reached a higher value there than at the attenuator. This case points out the advantage that would be gained by locating the attenuator in the actuator manifold. Figure 26 shows pressures developed at the same locations without the attenuator.

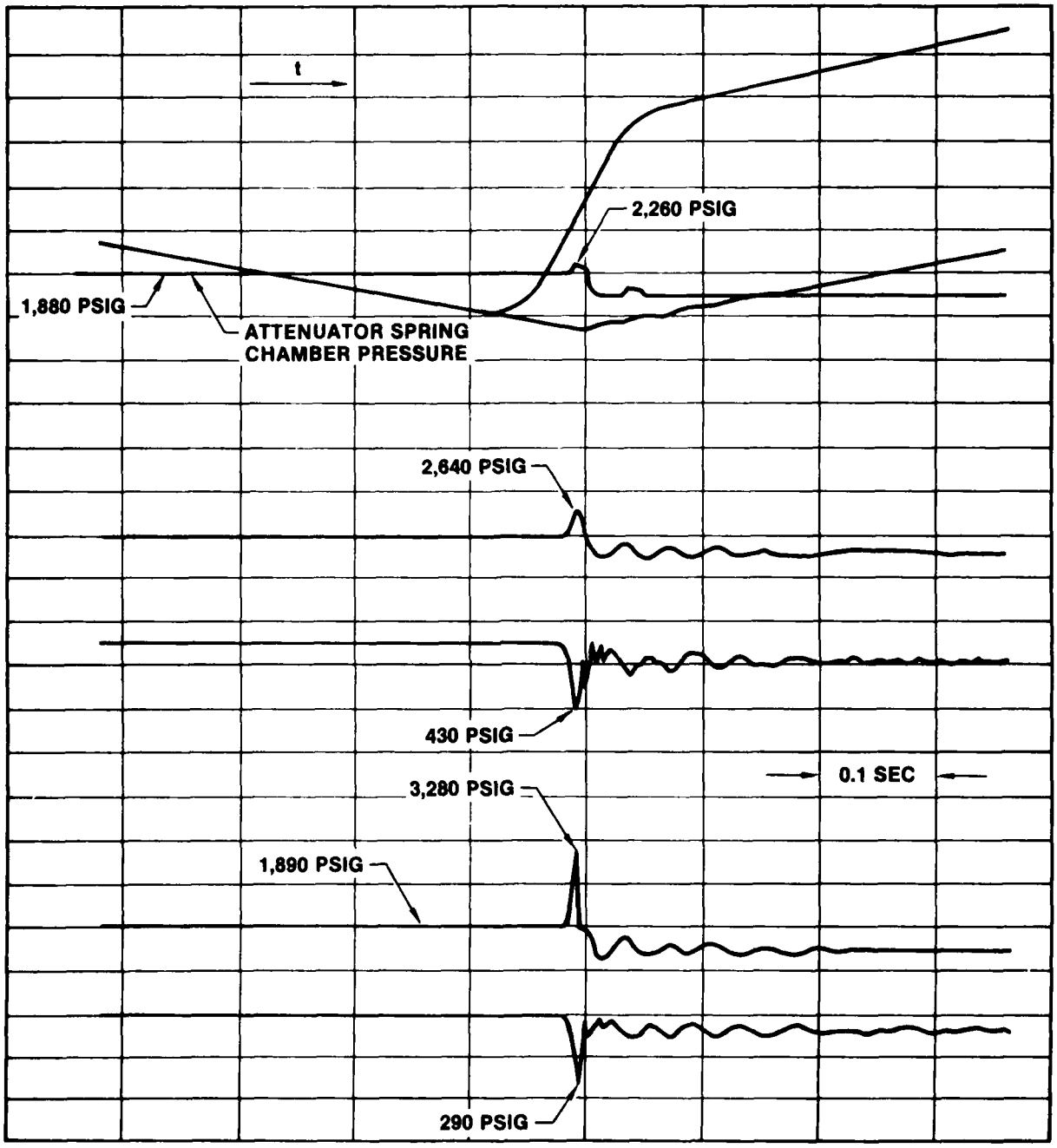

GP23-0550-156

Figure 25.
TRANSIENT CAUSED BY MAXIMUM INPUT RATE REVERSAL WHILE RETRACTING
Attenuator Installed

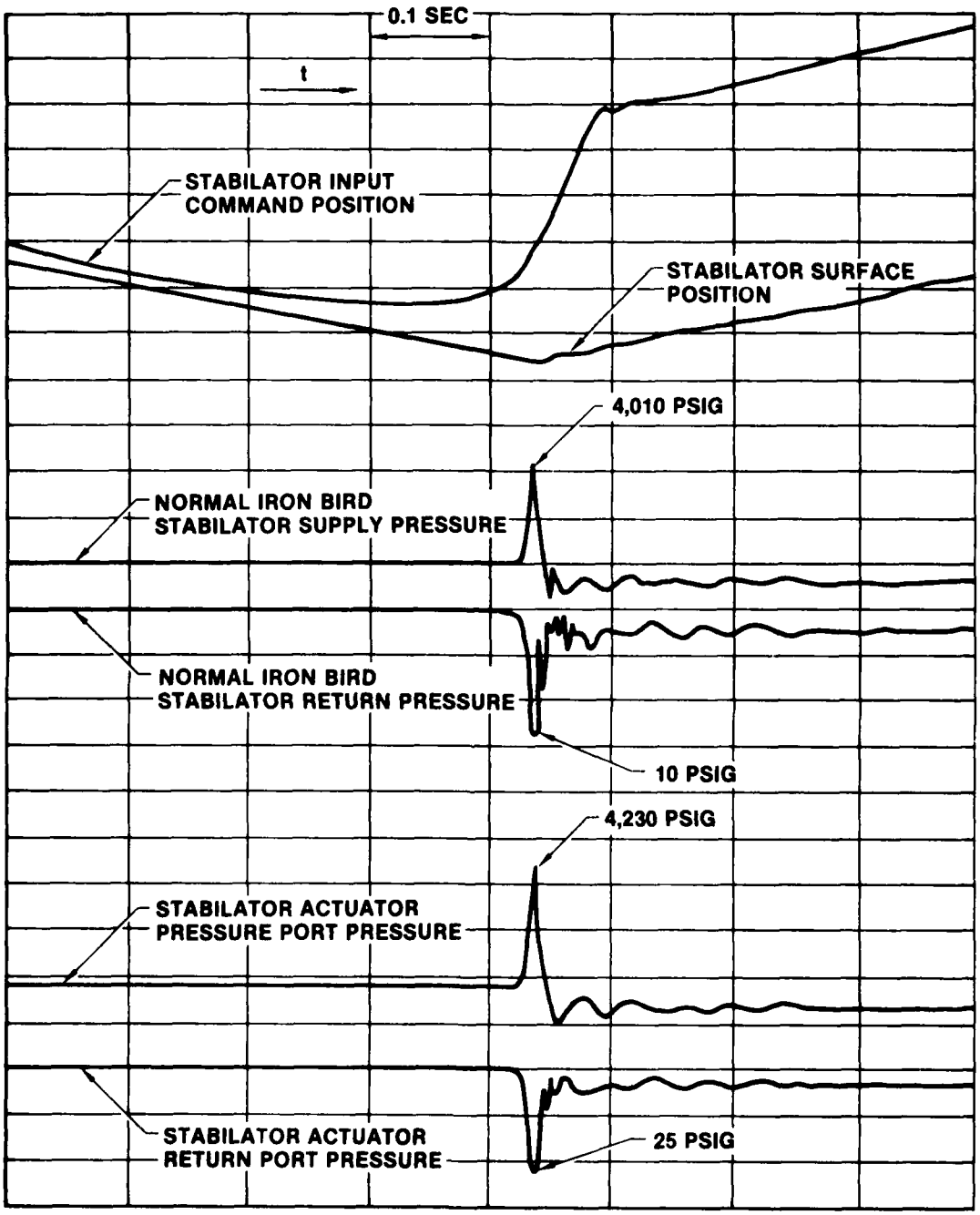

GP23-0550-156

Figure 26.
TRANSIENT CAUSED BY MAXIMUM INPUT RATE REVERSAL WHILE RETRACTING
No Attenuator

The test version of an attenuator being considered for use on the F-18 is shown in Figure 27. The charging orifice is separate from the spool in this version and an additional orifice is provided to increase damping of the high frequency spring mass system consisting of the spool, mechanical spring and fluid spring. The fluid spring is much stiffer than the mechanical spring.

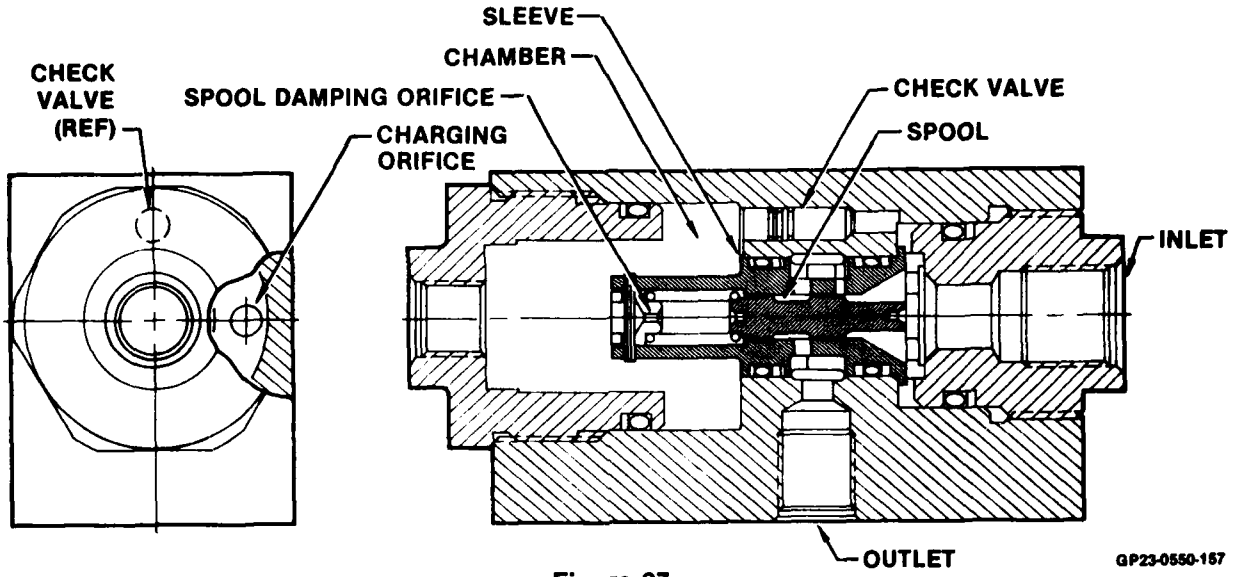

Figure 27.

0.25 IN. SPOOL SLEEVE WATER HAMMER ATTENUATOR

The water hammer attenuator concept appears to be even more advantageous with a higher density fluid such as CTFE, since water hammer pressure increases as the square root of fluid density ratio.

b) Asymmetric Line Loss Distribution - Use of asymmetric line loss and nonlinear valves contribute to distribution system weight savings. These concepts can also contribute significantly to water hammer amplitude controls in flight control systems.

Figure 28 presents a comparison of three valve distribution systems: conventional (1/3-1/3-1/3), asymmetric, and asymmetric plus nonlinear valve. As shown, base pressure can be reduced over 3000 psi, which will be a significant benefit.

c) Local Velocity Reduction - Another approach in limiting water hammer amplitude is to reduce local velocity at the actuator, by making the pressure line larger immediately upstream of the actuator as shown in Figure 29.

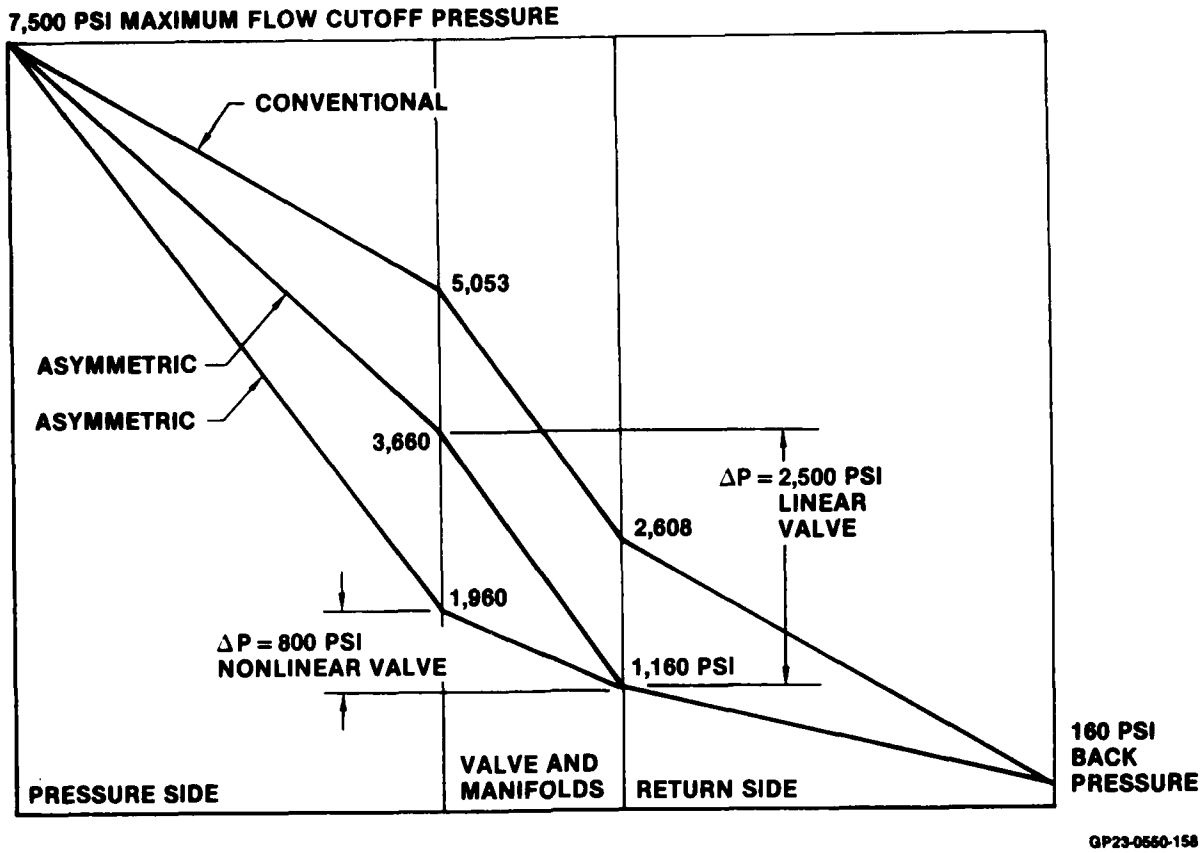

Figure 28.
PRESSURE LOSS DISTRIBUTION

Classic water hammer transient theory defines the velocity as one of the key contributors to such peaks. The technique was optimized and evaluated.

2.2.1.2.8 Water Hammer Control (Utility)

a) Water Hammer Attenuator - See discussion in 2.2.1.2.7 a).

b) Nonlinear Valve Plus Orifice Time Controls - In the past some critical subsystems have required the use of nonlinear valve orifices and control of valve spool time of operation to control transients. This approach was updated and applied to the F-15 and KC-10 utility subsystems where deemed necessary.

c) Force Motor Valve Control - In flight control systems, the mechanical or electric feedback nonlinearities around null control the stopping transient adequately. In fact, very rarely will you see peaks above system rated pressure. Force motors and associated electronics can provide the same desirable nonlinearities.

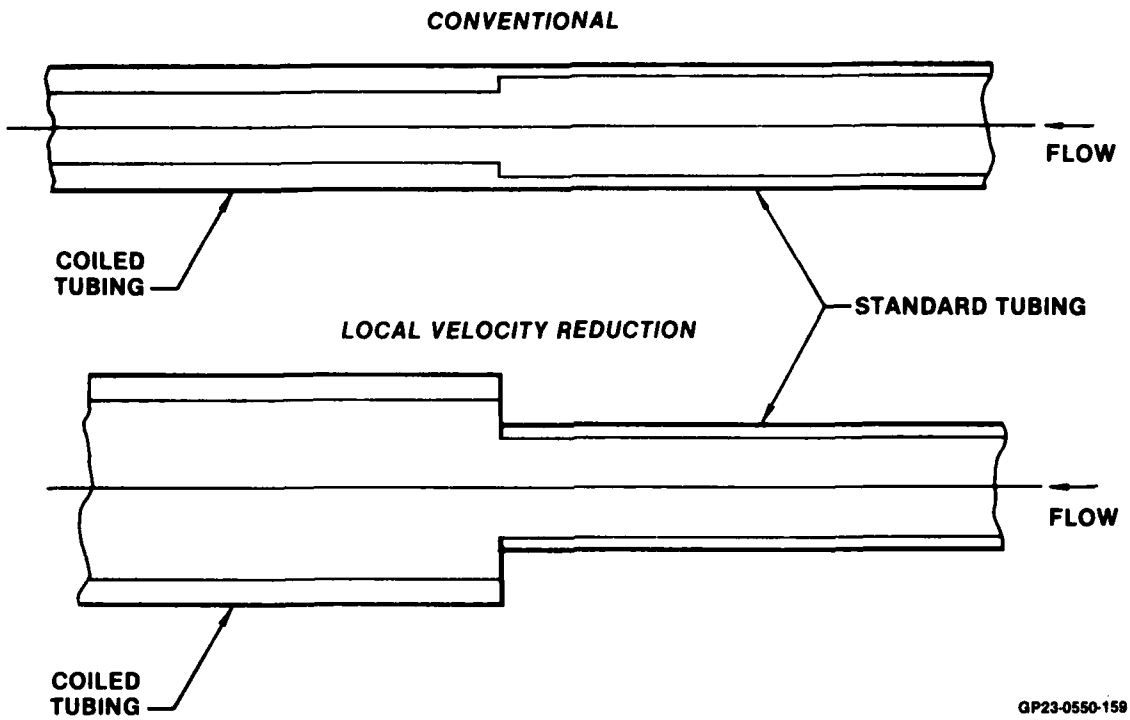

Figure 29.

CONVENTIONAL vs LOCAL VELOCITY REDUCTION
Configurations

2.2.2 Fluid Modifications and Concerns

2.2.2.1 Summary - The characteristics of bulk modulus, density, viscosity, lubricity, gas solubility, and compatibility are of primary concern for a new hydraulic fluid. These can all affect the design and performance of a hydraulic system. Figure 30 lists typical values for fluid properties of four fluids of primary interest. Both A02 and A08 CTFE fluids were considered. Preliminary analyses shows that the lower kinematic viscosity of A02 at fluid temperatures below 0°F gives much better tubing flow versus pressure drop characteristics than A08.

Bulk modulus is a concern in determining hydraulic actuator stiffness and achieving high rate response. The resonant frequencies of the system may be outside the normal pump RPM range for MIL-H-5606 and Skydrol, but not necessarily for CTFE fluid because of the differences in bulk modulus.

FLUID PROPERTY	CTFE HALOCARBON A02	MIL-H-5606C	MIL-H-83282A	SKYDROL 500 B
FLASH PT °F	—	220	425	360
FIRE PT °F	—	230	490	420
A.I.T. °F	1,170	435	650	950
HEAT OF COMBUSTION BTU/LB	2,390	18,100	17,700	12,800
ATOMIZED SPRAY	NONREACTIVE	SUSTAINS	SUSTAINS	EXTINGUISHES
HOT MANIFOLD IGNITION				
STREAM °F	1,700	730	630	1,440
SPRAY °F	> 1,700	1,330	1,250	1,500
VISCOSITY CS				
—65°F	1,200	2,127	11,980	3,500
– 40°F	202	500	2,116	600
275°F	0.661	3.4	2.247	2.5
SPECIFIC GRAVITY				
77°G GM/CC	1.84	0.83	0.84	1.06
VAPOR PRESSURE mm/HG				
200°F	4.5	6	0.15	
250°F	20	19	0.35	
300°F	71	60	1.20	
BULK MODULUS PSI ISOTHERMAL SECANT AT 3,000 PSI				
100°F	184,619	200,000	230,000	268,000
275°F	110,296	120,000	145,000	180,000
BULK MODULUS PSI ADIABATIC TANGENT AT 3,000 PSI 77°F	243,214	273,300	274,200	

GP23-0550-165

Figure 30.

HYDRAULIC FLUID PROPERTIES

Typical Values

Fluid density directly affects the pressure loss in the flow of the fluid through restrictions (valves, orifices, and lines), and the inertias which are experienced in high speed rotating groups (pumps and motors). The mass of the fluid resists acceleration when pressure energy is changed into velocity. The higher density of the CTFE fluid requires larger valve areas and orifices to transmit a given fluid power. To accelerate a denser fluid to a given velocity requires a higher inlet pressure. The penalty for accelerating and decelerating the CTFE fluid at a given pressure differential is larger line sizes, which increases system weight.

The kinematic viscosity of CTFE fluid by itself appears more desirable than MIL-H-5606 or Skydrol. However, its resistance to flow under its own gravity head is greater, since mass density is a factor. The pressure drop in a line varies directly with absolute viscosity for laminar flow, but only to the 1/4 power for turbulent flow. Much of the flow in aircraft hydraulic systems is in the turbulent flow range. Figure 31 shows that the calculated pressure drop is greater for CTFE fluid than for MIL-H-5606 or Skydrol in hydraulic tubing at 200°F. However, at 0°F and below 8.0 GPM, CTFE fluid pressure drop is less. This is due to the overriding lower viscosity of CTFE fluid in the laminar flow range.

Lubricity is a property of fluids which refers to the capability to prevent wear between metal surfaces under load. As long as there are adequate film thicknesses and shear rates to support the loads by viscous action, lubricity is not critical. However, during starting and environmental or load conditions that break through the oil film, the metal to metal contact will cause galling or abrasion. CTFE lubricity is of concern, and component wear was monitored during testing.

Gas solubility is a logarithmic function of temperature and must be considered when fluids are used over a temperature range of -65°F to 275°F. Dissolved gas has little effect on the physical properties of the fluid. Entrained gas, however, can lead to air separation problems, cavitating the pump inlet and causing malfunction of the control and brake systems. The CTFE fluid contains 15 to 18% air by volume, compared to 12% for MIL-H-5606 at atmospheric pressure. This, in conjunction with the higher density, is a concern in air separation.

Compatibility of a fluid with the metallic system components and elastomer seals is of great importance. Care was taken to exclude materials adversely affected by the fluid. MCAIR will use elastomer materials suggested by AFWAL/MLBT for component and system applications.

The above fluid characteristics, along with fluid property changes at high pressures, was considered in the design studies to incorporate the advanced concepts, so that the system analysis and weight impact assessments would be meaningful.

2.2.2.2 Viscosity Control (Restrictors vs Nonrestrictors) - Fluid data received from AFWAL/MLBT showed that the kinematic viscosity of different batches of A02 at -65°F varied from 750 cs to 1200 cs. If the viscosity of the fluid can be controlled to a minimum value at -65°F and still provide pump lubricity at 275°F, this would reduce the weight penalty of using A02 fluid in some subsystems.

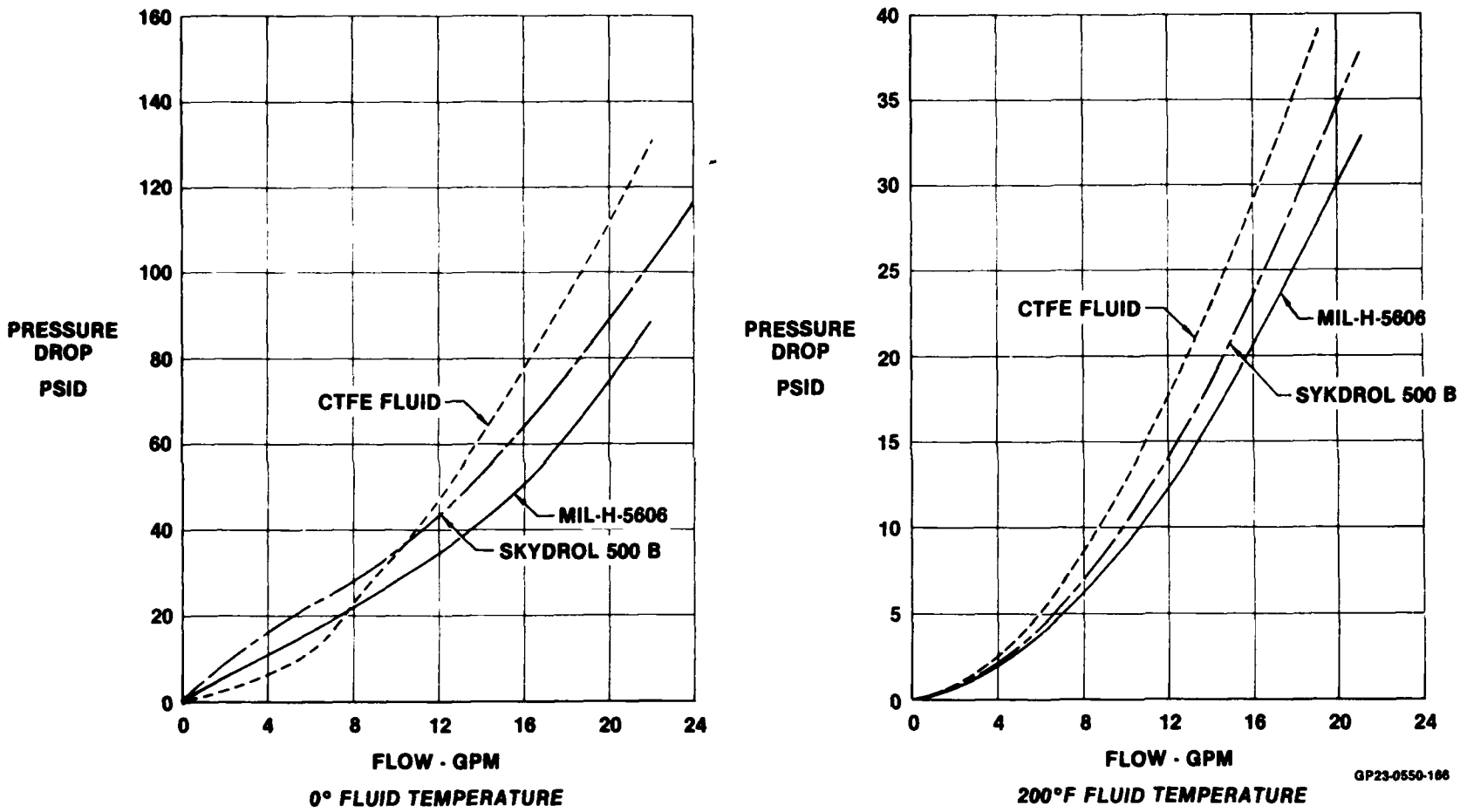

Figure 31.
FLOW vs PRESSURE DROP AT 0° AND 200°F
0.375 In. O.D. x 0.028 In. Wall x 12.00 In. Length Tube

Preliminary studies of the F-15 main landing gear showed that A02 fluid would allow the removal of restrictors. Smaller lines could be used to achieve the subsystem design operating time, see Figure 32. It is shown, for example, that the A02 (750 cs) design operating time is the same as the present F-15 system at 60°F, and would provide acceptable times below -40°F.

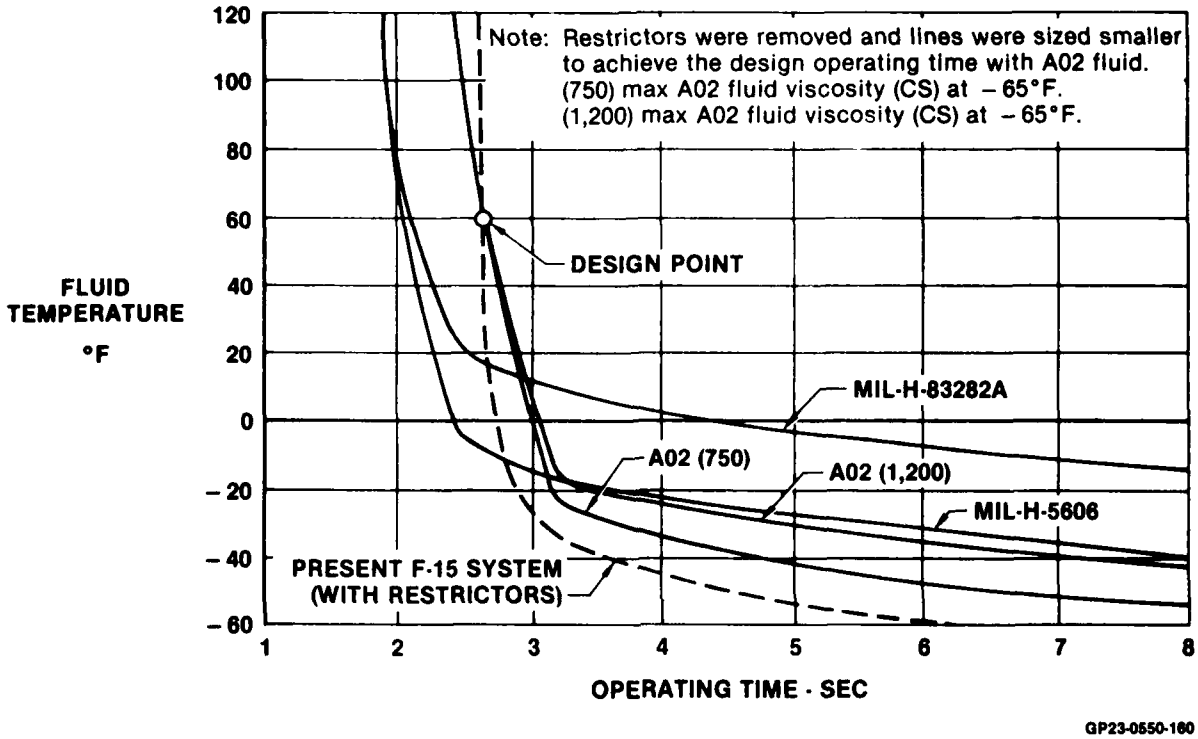

Figure 32.

F-15 MAIN LANDING GEAR ACTUATOR OPERATING TIME vs FLUID TEMPERATURE

2.2.2.3 Pressure-Viscosity Correlation - The change in viscosity with pressure was considered in all analyses. A method for correcting viscosity at pressures had previously been developed by MCAIR for the computer programs under the Air Force contract "Aircraft Hydraulic Systems Dynamic Analysis Computer Program". Equations derived by Professor Klause at Pennsylvania State University were used. Actual tests on various fluids were conducted by Professor Klause. Some of the fluids tested were supplied by Halocarbon Products Corporation, who also manufactures the A02 fluid.

To check the reliability of the computer method, data from three Halocarbon test fluids shown in Professor Klause's report (AFML-TR-67-107 Part 1 "Fluids, Lubricants, Fuels and Related Materials - 1967") were selected for comparison with computer fluids (Reference 6). Figure 33 shows the physical properties of these fluids. The three selected had densities at 68°F (1.817-1.923) in the range of the A02 fluid density (1.866). In a telecon, Mr. Cassanos from Halocarbon Products noted that the Halocarbon Oil 11-14 is nearly identical in chemical composition to A02, but has a higher viscosity so this fluid was selected for comparison. The Halocarbon Oil 208 was also selected because its viscosity is very close to the A02 viscosity. The Halocarbon Oil 11-21 was selected because its viscosity was several times higher than A02 which would accentuate the viscosity at higher pressures.

MLO NUMBER	DESCRIPTION	ATMOSPHERIC VISCOSITY, CENTISTOKES		VISCOSITY INDEX	ASTM SLOPE	SLOPE INDEX	REFRACTIVE INDEX AT 68°F	DENSITY, GM/CC AT 68°F	MOLECULAR WEIGHT
		100°F	210°F						
7756	HALOCARBON OIL 208	2.303	0.9254	68	0.961	539	1.4549	1.817	155
7741	HALOCARBON OIL 11-14	6.225	1.470	−104	1.068	432	1.3859	1.884	—
7743	HALOCARBON OIL 11-21	26.80	2.889	−335	1.075	425	1.3949	1.923	190

GP23-0550-161

Figure 33.
PHYSICAL PROPERTIES OF OTHER HALOCARBON FLUIDS
Ref: Report AFML-TR-67-107 Part 1 Table 6

The computer results were plotted on the data graphs taken from the report. The computer comparison showed a difference of approximately 1 centistoke at 8000 psi for the Halocarbon 208 fluid, see Figure 34 and was on the conservative side. The Halocarbon 11-14 fluid computer prediction was identical to the test data, see Figure 35. The very high viscosity 11-21 computer prediction at 8000 psi, Figure 36, was approximately 10 centistokes (8%) less than the test data showed.

Overall the computer program seems to predict viscosities at higher pressures with reasonable accuracy. MCAIR considered viscosity change with pressure for all our analytical work in the design technology program.

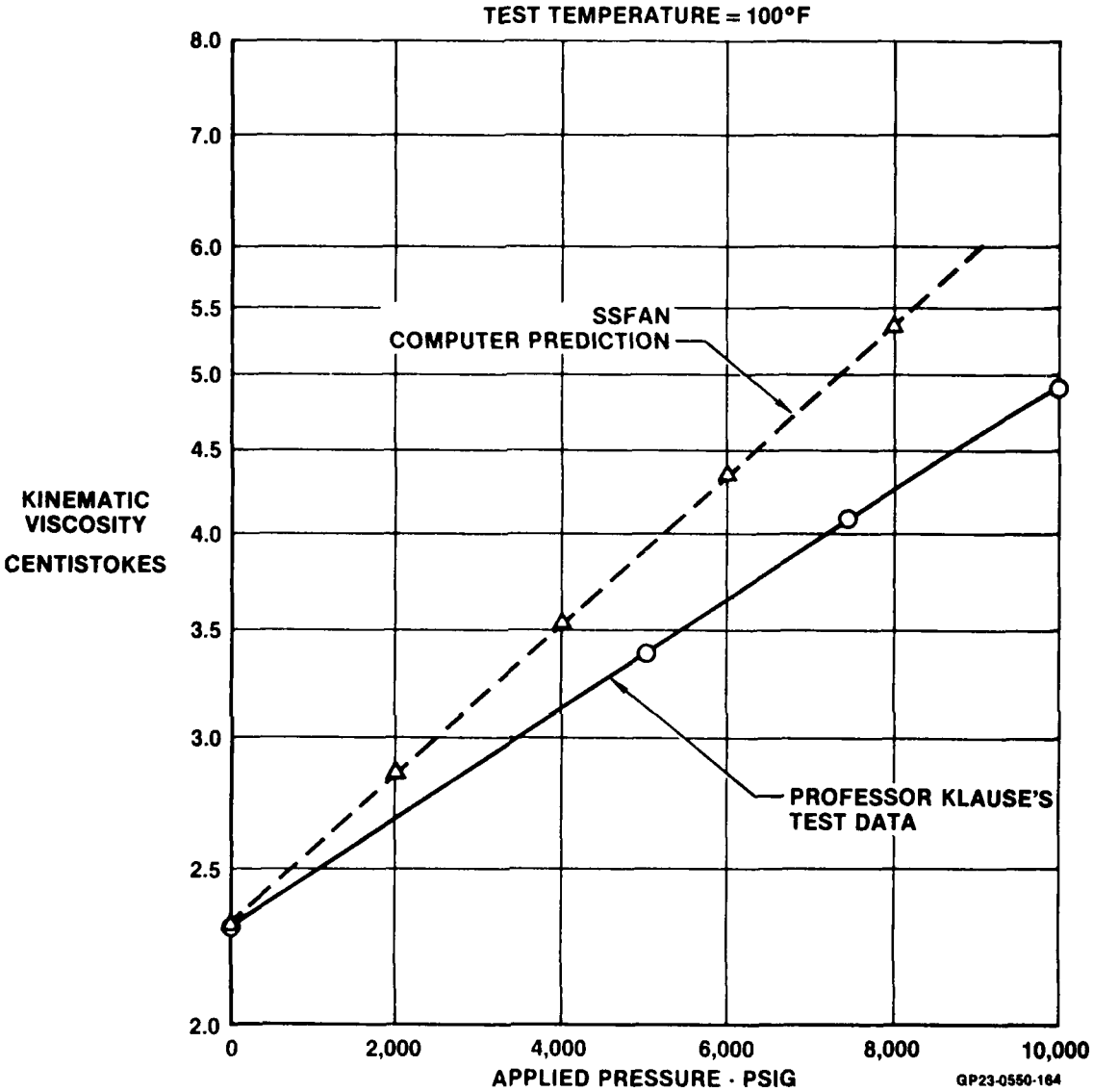

Note: This fluid viscosity and density were very close to the base A02 fluid.

Figure 34.

EFFECT OF PRESSURE ON THE VISCOSITY OF HALOCARBON OIL 208

MLO 7756

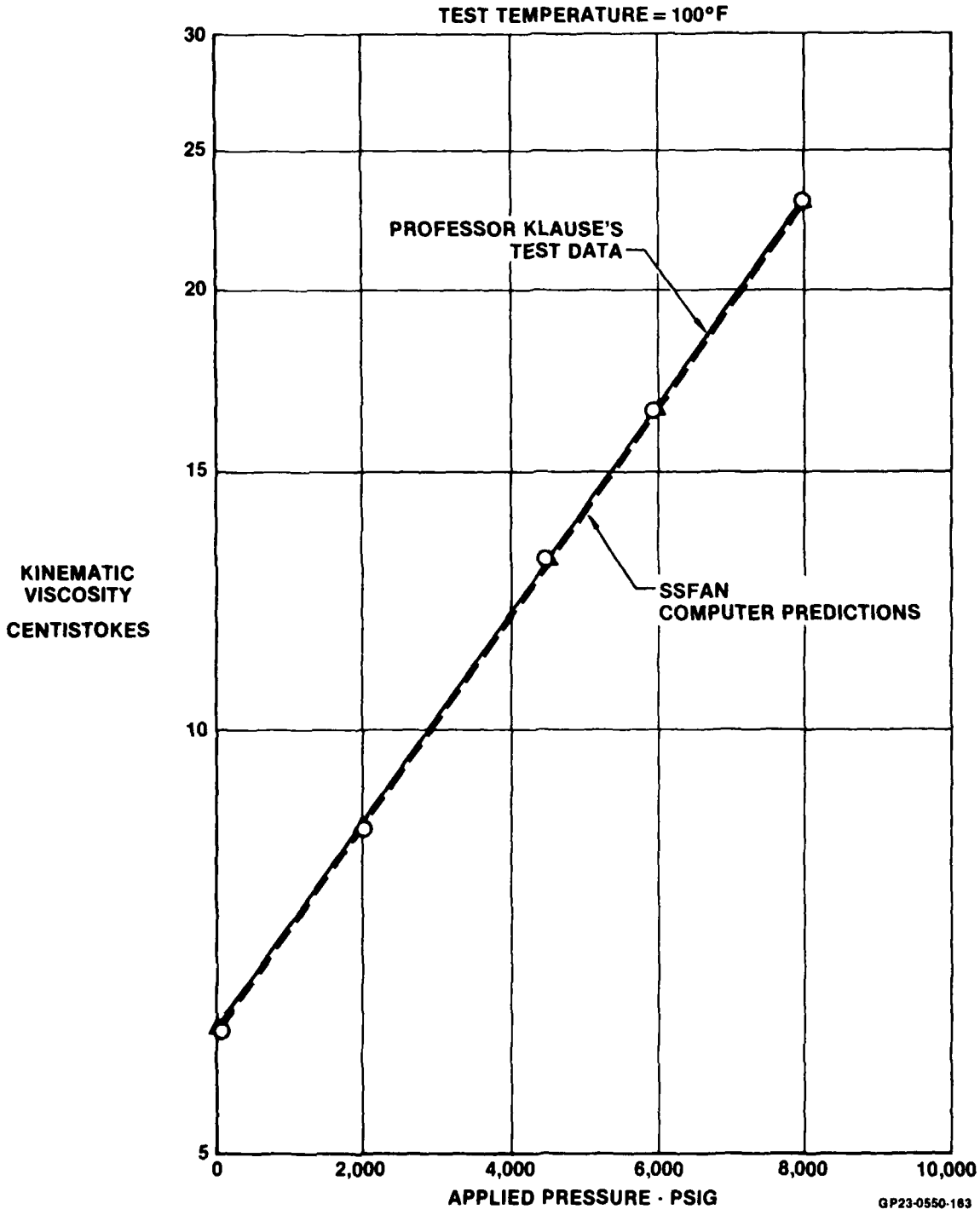

Note: This fluid chemical composition is nearly the same as A02. It's viscosity is approximately twice that of A02.

Figure 35.

EFFECT OF PRESSURE ON THE VISCOSITY OF HALOCARBON OIL 11-14

MLO 7741

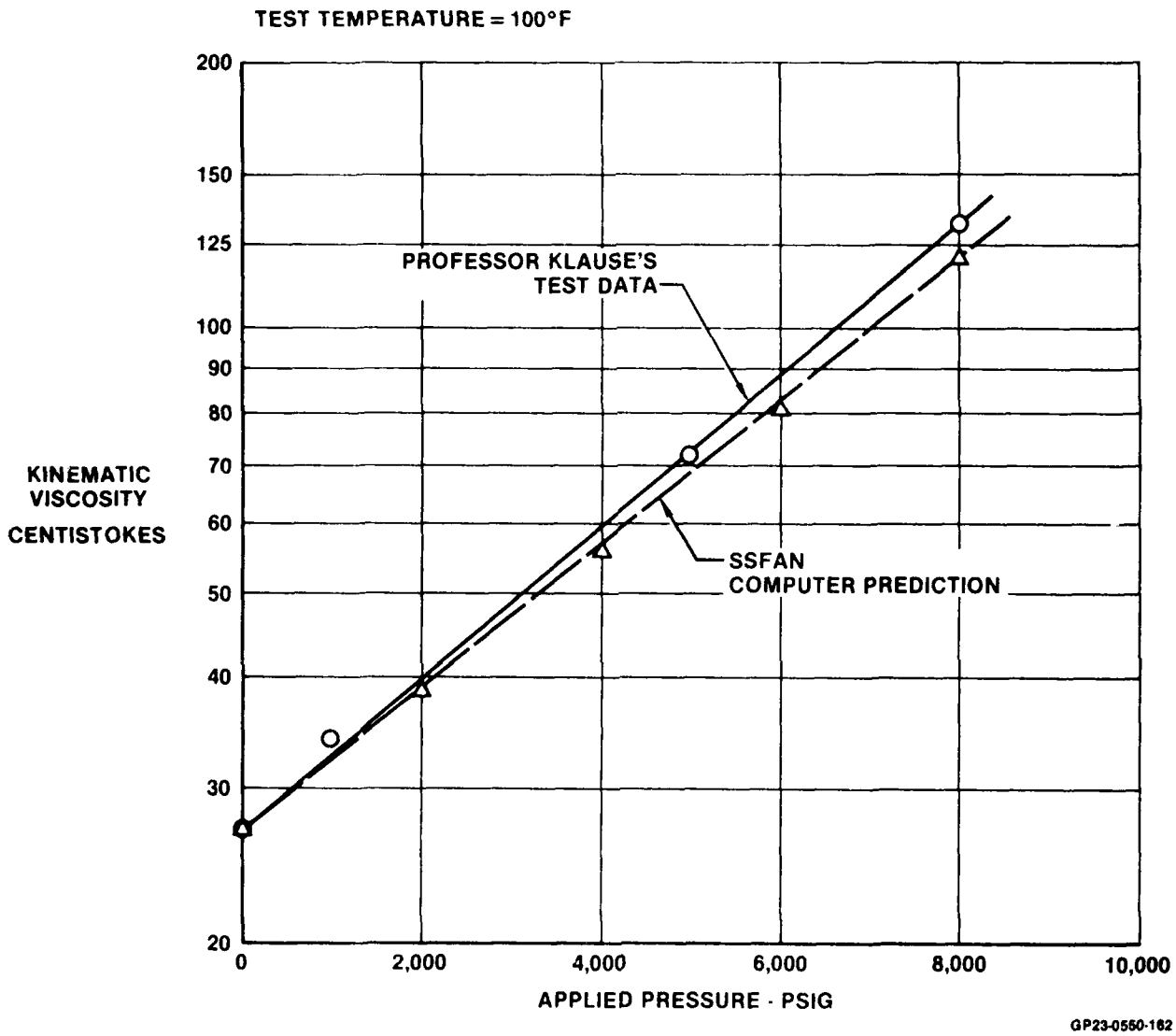

Figure 36.
EFFECT OF PRESSURE ON THE VISCOSITY OF HALOCARBON OIL 11-21
MLO 7743

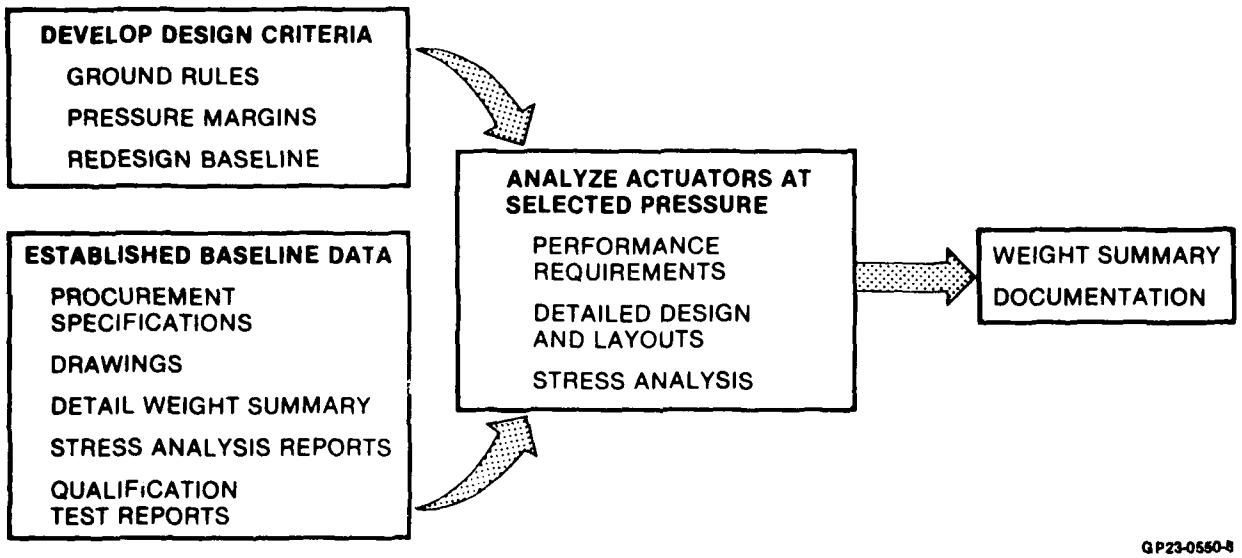

Figure 49.
DESIGN PROCEDURES

Also it would seem reasonable that a pressure vessel design could be optimized to handle infinite fatigue life transients, one burst cycle, and a limited number of proof pressure cycles. Therefore, for the detailed design work associated with the selected higher pressure, the proof pressure factor will be adjusted as deemed necessary to be consistent with the other pressure vessel design factors.

2.3.2.2 Actuator Selection, Detail Design and Results - For the weight trend vs pressure study, representative actuators were selected. Actuators were selected that would provide an accurate picture of the impact of each pressure on the total aircraft actuator weight.

- Larger, higher horsepower actuators were selected.
- Actuators were selected that were representative of many other actuators. For example, there are 12 spoiler actuators on the KC-10A and the ailerons and rudder actuators are very similar to the elevator actuators.

The actuators selected for the weight trend vs system pressure were:

	FLIGHT CONTROLS	UTILITY
o F-15	Aileron	Bypass Door
		Diffuser Ramp
	Stabilator	Main Landing Gear
o KC-10A	FLIGHT CONTROLS	UTILITY
	Spoiler	Main Landing Gear
	Inboard Elevator	Main Landing Door

The approach shown in Figure 49 was used in defining the actuator weights for each pressure. The design criteria developed per 2.3.2.1 and established baseline data were blended to allow an efficient, effective analysis, and weight determinatlon at each pressure.

A typical procedure is presented in Figure 50. This approach was used on all actuators.

The influence of pressure vessel criteria (burst, proof, and transient) on detail design was of interest. For minimum weight it would seem desirable to keep burst and proof pressure requirements in line with infinite fatigue life requirements. The F-15 stabilator actuator was chosen to evaluate the influence of the criteria in current designs.

DIAGRAM I

PART NAME	CRITICAL DESIGN REQUIREMENT	PRESSURE REQUIREMENTS					STRUCTURAL REQUIREMENTS										
		RATED PRESSURE	BURST PRESSURE	PROOF PRESSURE	TRANSIENT PRESSURE	BEARING DESIGN	VIBRATION	COLUMN	BEAM	STIFFNESS (FLUTTER MARGIN)	g LOADS	LOADS-LIMIT	LOADS-ULTIMATE	GUNFIRE	CYCLE LIFE-FLT CONT	CYCLE LIFE-UTILITY	MANUAL INPUT
	DESIGN FACTOR	1.00	2.50	1.50	1.35	2.50	1.00	1.50	1.50	1.15	1.50	1.00	1.50	—	—	—	—
BEARINGS	(CONTACT PRESS)	—	—	—	—	✓	—	—	—	—	—	—	✓	—	✓	✓	—
ROD END	(BENDING MOMENTS)	—	—	—	—	—	✓	✓	✓	✓	✓	—	✓	—	✓	✓	—
LUG END	(BENDING MOMENTS)	—	—	—	—	—	✓	✓	✓	✓	✓	—	✓	—	✓	✓	—
ROD	(BEAM/COLUMN)	—	—	—	—	—	✓	✓	✓	✓	✓	—	✓	—	—	—	—
PISTON	(ULTIMATE LOAD/ CYCLE LIFE)	—	—	—	—	—	—	—	—	✓	—	—	✓	—	✓	✓	—
END CAPS	(BURST/CYCLING FATIGUE)	✓	✓	—	✓	—	—	—	✓	✓	✓	—	✓	—	✓	✓	—
MANIFOLD	(IMPULSE CYCLING/BURST)	✓	✓	—	✓	—	✓	—	—	—	✓	—	—	—	✓	✓	✓
DYNAMIC SEAL	(OPER PRESS GAP/CYCLING)	✓	—	✓	✓	—	—	—	—	—	—	—	—	—	✓	✓	—
STATIC SEALS	(OPER PRESS GAP/CYCLING)	✓	—	✓	✓	—	—	—	—	—	—	—	—	—	✓	✓	—
PISTON SEALS	(OPERATING PRESS GAP)	✓		✓	✓	—	—	—	—	—	—	—	—	—	✓	✓	—
BARREL	(HOOP STRESS/ BREATHING/ COLUMN)	✓	✓	—	✓	—	✓	✓	✓	✓	✓	—	✓	✓	✓	✓	—

GP23-0550-6

Figure 48.

TYPICAL ACTUATOR DESIGN CRITERIA 3,000 PSI

Return system transients were also studied in typical computer simulations using CTFE fluid and showed higher transient pressures than MIL-H-5606 fluid. Transient design pressures were ratioed accordingly, along with burst to transient and proof to transient ratios. The remainder of the table was apportioned using these ratios, as defined in military specifications and adjusted for the difference in fluid.

The distribution system design criteria for use in the weight vs pressure trend study was based on existing 3000 psi and 8000 psi criteria. The 5000 and 10,000 psi system pressures were extrapolated. The design factors vs system pressure are presented in Figure 47.

SYSTEM PRESSURE	DESIGN FACTOR
3,000	4.0
5,500	3.5
8,000	3.0
10,000	2.6

ALL TITANIUM DISTRIBUTION SYSTEM

GP23-0550-5

Figure 47.

DISTRIBUTION SYSTEM DESIGN CRITERIA

c) General Comment - Hydraulic component design requirements can be quite complex. Figure 48 presents typical 3000 psi flight control actuator design criteria. Typical actuator parts and their critical design requirements are listed vs the various structural and pressure vessel design criteria and factors. The criteria applicable to each part are checked. The 1.5 design factor associated with the proof pressure would seem to be misused. It was defined in the LHS program as a structural design margin or requirement which was not changed in going from 3000 to 8000 psi. The detailed stress report for the F-15 stabilator was evaluated and the proof pressure factor dictated the detail design in over half of the areas analyzed.

Logically it would seem that infinite fatigue life requirements required in flight control actuators and defined by transient peaks and valleys would predominate, followed by burst pressure.

b) Design Criteria - CTFE Fluid - Criteria were similarly developed for CTFE fluid at various pressures. Computer simulation results for 3000 psi and 8000 psi systems indicated higher pressure transients. The new ratio of transient to operating pressure was used with the ratio of burst to transient pressure for current fluids to yield the values for CTFE fluid. The 5500 and 10,000 psi CTFE values were interpolated, based on 3000 and 8000 psi data. The result is presented in Figure 45.

	3,000 PSI	5,500 PSI	8,000 PSI	10,000 PSI
BURST PRESSURE	3.2 9,600	2.9 15,950	2.6 20,800	2.4 24,000
PROOF PRESSURE	1.92 5,760	1.92 10,560	1.92 15,360	1.92 19,200
TRANSIENT	1.7 5,100	1.55 8,525	1.4 11,200	1.28 12,800

GP23-0550-3

FIGURE 45
ACTUATOR MANIFOLDS, UTILITY ACTUATOR, AND OTHER COMPONENTS PRESSURE SIDE DESIGN CRITERIA
CTFE Fluid

Note that the flight control actuator barrels downstream of the control valve continue to use the conventional fluid criteria. The higher CTFE fluid transients are not felt in the barrel because it is protected by the control valve.

The component return side design criteria is presented in Figure 46.

	3,000 PSI	5,500 PSI	8,000 PSI	10,000 PSI
BURST PRESSURE	2.13 6,400	1.93 10,600	1.73 13,850	1.60 16,000
PROOF PRESSURE	1.28 3,840	1.28 7,040	1.28 10,240	1.28 12,800
TRANSIENT	0.40 1,200	0.40 2,200	0.40 3,200	0.40 4,000

GP23-0550-4

FIGURE 46
COMPONENT RETURN SIDE DESIGN CRITERIA
CTFE Fluid

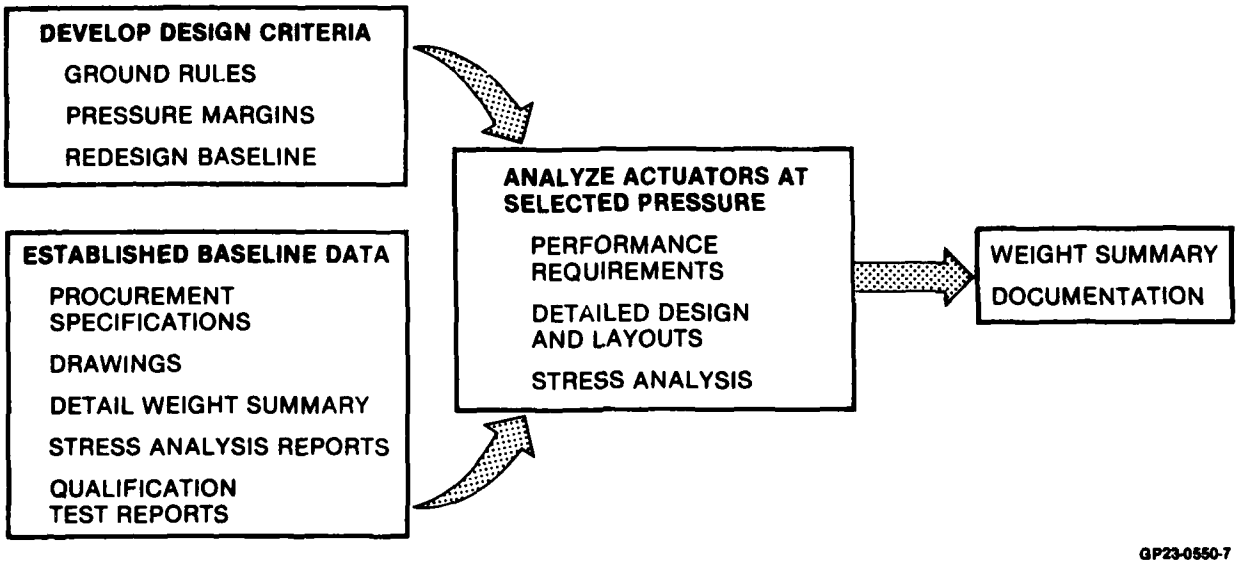

Figure 43.

DESIGN PROCEDURES

	3,000 PSI	5,500 PSI	8,000 PSI	10,000 PSI
BURST PRESSURE	2.5 7,500	2.25 12,375	2.0 16,000	1.8 18,000
PROOF PRESSURE	1.5 4,500	1.5 8,254	1.5 12,000	1.5 15,000
TRANSIENT	1.35 4,050	1.28 7,040	1.13 9,040	1.07 10,700

GP23-0550-1

Figure 44.

FLIGHT CONTROL ACTUATOR CYLINDER DESIGN CRITERIA

Conventional Fluid

The materials used in the detail component design efforts at DAC and MCAIR are listed in Figure 42. The steel, aluminum and titanium materials are standards in the aerospace industry. The material properties used in the stress analysis are per MIL-HDBK-5 (Reference 7).

STEELS
- 4140
- 4330
- 4340
- D6AC

ALUMINUM
- 356-T6 CASTING
- 6061-T6
- 7075-T73 FORGING

TITANIUM
- Ti-6Al-6V-2S_n

GP23-0550-2

Figure 42.

COMPONENT MATERIALS

The higher CTFE fluid density (2.2 times MIL-H-5606) results in a transient peak that is 1.4 times higher. The burst and proof pressure criteria are directly affected by the transients. So, preliminary transient analysis was conducted on 3000 and 8000 psi systems to ascertain specific transient increases. The interrelationship between transients and proof and burst was evaluated. The increases in proof and burst were rationalized based on the preliminary analysis to finally define the criteria used.

These selected criteria were used in component analysis, as shown in Figure 43.

a) Design Criteria - Conventional Fluids - Existing 3000 psi design criteria and previous LHS program criteria for 8000 psi (burst pressure = 2.0 operating pressure, proof pressure = 1.5 operating pressure, peak transient pressure = 1.2 operating pressure) were used as starting points. Higher pressure criteria was developed with this data and computer simulations indicated the pressure transients at 8000 psi would be approximately 9040 psi for current fluids rather than the 9600 previously suggested. The ratio of proof to operating pressure at 3000 psi was maintained for the higher pressures. Data for 5500 psi and 10,000 psi was interpolated (and extrapolated) using the 3000 and 8000 psi data points. Flight control actuator design criteria for conventional fluids is presented in Figure 44 as a typical example.

2.3 TASK III - SELECTED AIRCRAFT SYSTEM ANALYSIS-WEIGHT IMPACT OF CONCEPTS/APPROACHES

Typical hydraulic systems were evaluated by making detail layout drawings of selected components. The distribution system was evaluated using the SSFAN and HYTRAN computer programs for resizing tube diameters.

Higher hydraulic system pressure is the key for reducing weight in both areas. Typically, at higher pressure actuators can be smaller to produce a given hinge moment or horsepower. Higher pressure also means a lower flow rate is required, resulting in smaller lines.

2.3.1 APPROACH - The approach was to first evaluate the component and tubing weights at the baseline 3000 psi pressure. In some cases the component weight was lowered to reflect the design criteria used for higher pressure design. Next, minimum weight systems were sized to achieve the same performance at 3000, 5500, 8000 and 10,000 psi. The final pressure selection was made by deriving weight versus pressure curves. The other concepts were then evaluated at the selected pressure. The system design criteria was developed during this phase. Detailed component design requirements were defined, considering stiffness, operating geometry, and pressure.

2.3.2 PRESSURE SELECTION - A hydraulic system pressure of 3000 psi is used in almost all U.S. military and commercial aircraft flying today. Through the 1960's and early 1970's studies showed that the optimum pressure was 4000 to 4500 psi. From the mid 1970's to date higher hydraulic system pressure has become more attractive for weight savings because of higher fuel costs, better aircraft performance, etc. A pressure of 8000 psi was selected for the Navy LHS system, and it has been shown that system weight can be reduced approximately 30%. Tests have shown that the potential problem of sealing at high pressure is minimized through using controlled clearances. In the FWFRHS study, 8000 psi was selected as one pressure to study because some work had been done at this point and data was available. 5500 psi was selected as another point because it was midway between 3000 and 8000 psi. As the analyses developed, it showed that for some items, weight kept decreasing with pressure. Therefore 10,000 psi was added as another study point to try to determine the optimum pressure.

2.3.2.1 Design Criteria Development - The design criteria for the 3000, 5500, 8000, and 10,000 psi pressures for the system pressure vs weight trend study required definition. The 3000 psi and LHS 8000 psi system criteria were available. Therefore, they were used to extrapolate the 5500 and 10,000 psi system design criteria.

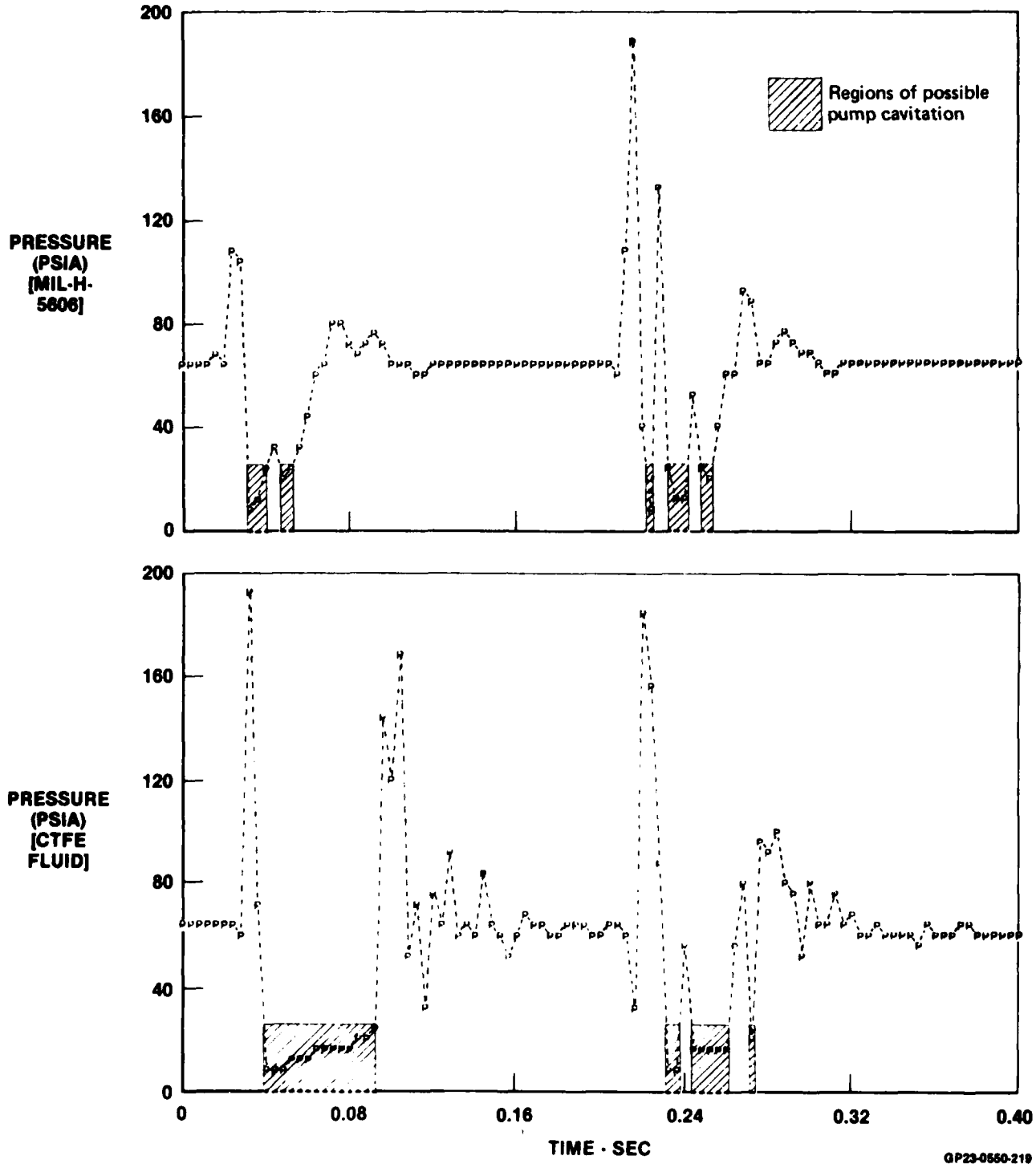

Figure 41.

F-15 PC-1 PUMP INLET PRESSURE DURING MAXIMUM RATE, NO-LOAD PITCH REVERSAL

2.2.2.6 Seal Materials - Seal materials are of concern because previous testing has shown that CTFE is not compatible with standard seal materials. A relatively new material, phosphonitrilic fluorinated (PNF) polymer, is available and is compatible with the CTFE fluid. However, the seal swell runs 22% and higher. Reference 2 report, "Development of Seals for Nonflammable Hydraulic Fluids", shows test results with PNF seals in CTFE (A08) fluid. Testing by the Air Force Materials Laboratory (AFWAL/MLBT) of Ethylene Propylene Diene Monomer (EPDM) had shown promising results and this material was also used in this program. Seal testing done at Vought Corporation, References 3 and 4, were reviewed for applicability to this program.

2.2.2.7 Seal Configuration vs Pressure - At higher system operating pressures the pressure differentials across seals will be higher, producing greater potential for seal extrusion. Reference 3 indicated that seal configuration and seal groove design are important for high pressure operation. These concerns were investigated and included in this program.

2.2.2.8 CTFE Fluid Pumpability versus Pressure - Pumpability at high pressure is a concern. The higher density and low kinematic viscosity of the fluid at high temperatures could affect pump wear and life.

A relatively small displacement pump was used during 3000 psi pump testing at Boeing, see Reference 5, and "a lubrication failure occurred at the cylinder block to valve plate interface while operating at 7000 rpm rated speed". Subsequently, a 0.1 cubic inch displacement pump was run for 100 hours at 8000 psi by AFWAL/POOS with no failures. This test was run with A02 fluid while the Boeing test was run with A08 fluid.

Preliminary computer analyses show that the higher density CTFE will require a higher reservoir pressure than MIL-H-5606 fluid. Figure 41 shows the computer prediction for the F-15 PC1 suction system with MIL-H-5606 and CTFE fluid. Previous tests on the F-15 pump with MIL-H-5606 indicate that a suction port pressure of at least 26 psia is necessary to keep the pump from cavitating. The increased cavitation time with CTFE shown in Figure 41 could mean the pump inlet flow would not recover after cavitating.

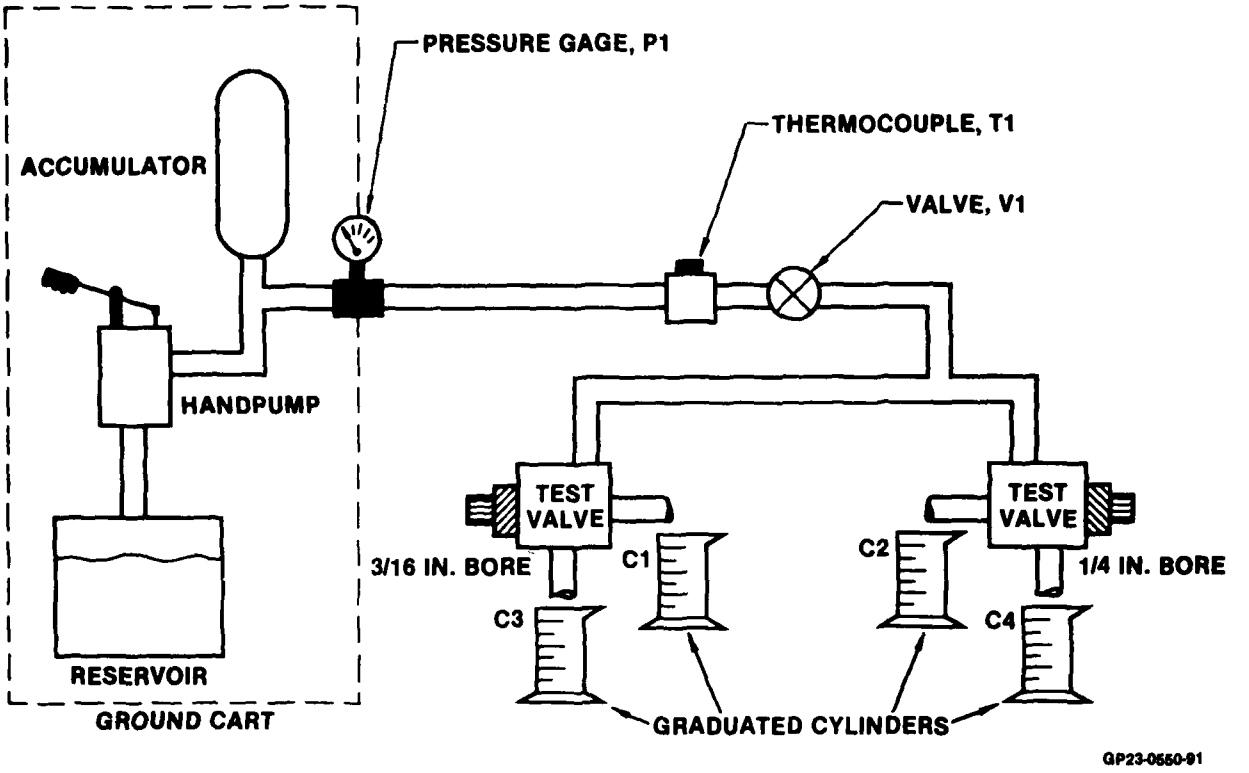

Figure 39.

HIGH PRESSURE HYDRAULIC VALVE LEAK TEST SYSTEM

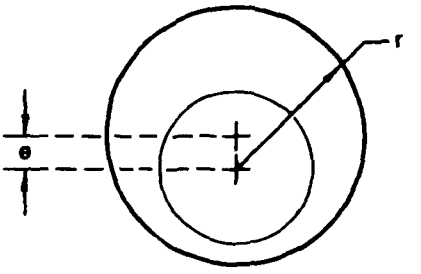

$$Q = \frac{\pi r C^3}{6 \mu L}\left[1 + \frac{3}{2}\left(\frac{e}{c}\right)^3\right](P1 - P2)$$

WHERE

r = TUBE RADIUS (IN., AS NOTED)

c = RADIAL CLEARANCE (IN., AS NOTED)

μ = FLUID VISCOSITY (LB-SEC/IN.^{2})

L = PASSAGE LENGTH (IN., AS NOTED)

e = ECCENTRICITY OF INNER SHAFT

$(P1 - P2)$ = PRESSURE DROP IN DIRECTION OF FLOW (PSI, AS NOTED)

GP23-0550-92

Figure 40.

ANNULAR ORIFICE EQUATION

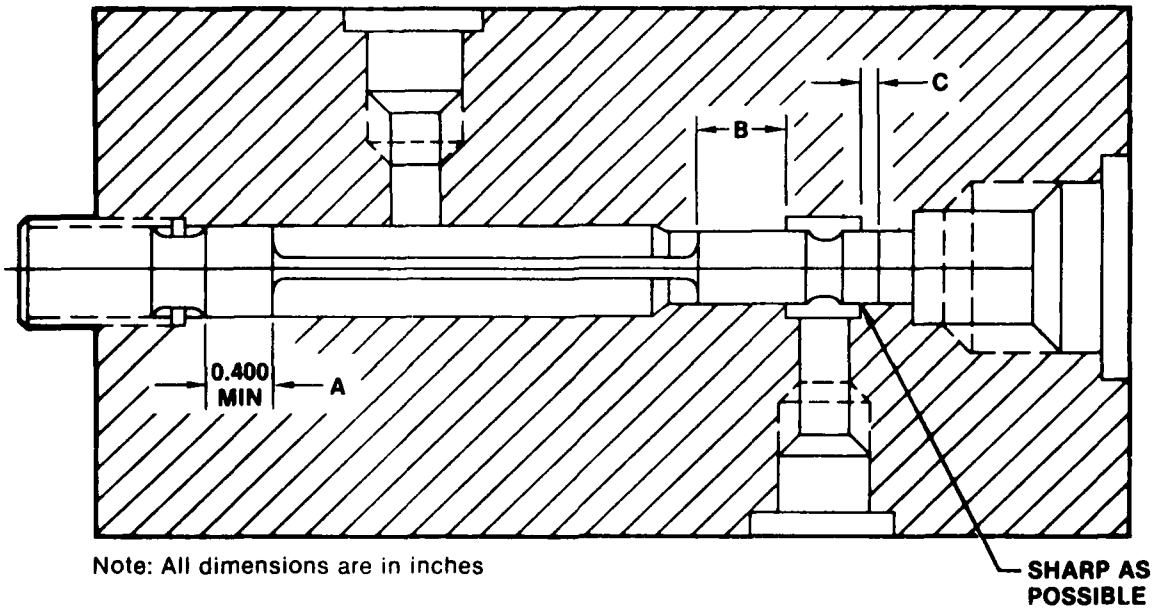

Note: All dimensions are in inches

AREA	DESCRIPTION	DIAMETRAL CLEARANCE	
		REQUIREMENT	ACTUAL
A	0.312 DIA.	0.000500	I.D. 0.312460 – O.D. 0.311968 CL. 0.000492
B	0.250 DIA. × 0.38 LONG	0.000010*	I.D. 0.250670 – O.D. 0.250660 CL. 0.000010
C	0.250 DIA. × 0.125 LONG	0.000050	I.D. 0.250670 – O.D. 0.250620 CL. 0.000050

*Fit as close as possible: less than 0.000010 preferred

GP23-0550-90

Figure 38.

HIGH PRESSURE HYDRAULIC VALVE LEAK TEST FIXTURE

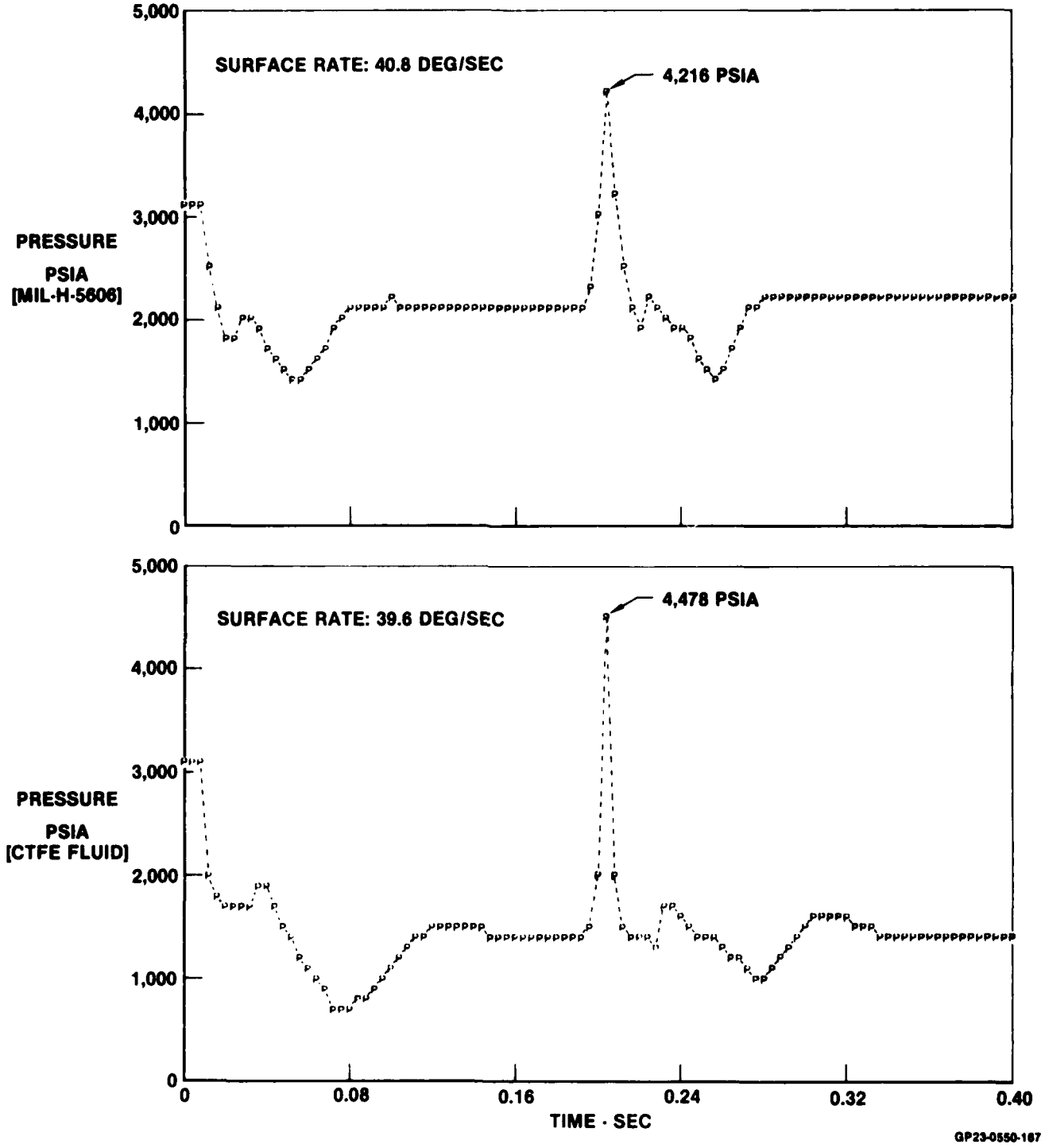

Figure 37.
F-15 L/H STABILATOR PC-1 PRESSURE DURING MAXIMUM RATE, NO-LOAD PITCH REVERSAL

2.2.2.4 Increase in Water Hammer Peaks - Figure 37 compares the water hammer pressure for a MIL-H-5606 system and a minimum change CTFE system. The only changes made to the baseline (MIL-H-5606) system to obtain the minimum change CTFE system were increases in the stabilator control valve areas. This figure illustrates three areas of concern with CTFE fluid usage.

1. The slower system response and the increased time necessary to establish steady state conditions after a disturbance.

2. The increased pressure drop through the distribution system, resulting in lower base operating pressures at the actuators.

3. The higher water hammer pressures experienced at a given flow rate, in spite of a lower base pressure at the actuator. For example, the water hammer peak with MIL-H-5606 rises approximately 2000 psi above the base pressure prior to the transient, while the water hammer peak of CTFE fluid rises approximately 3000 psi above its base pressure.

2.2.2.5 System Heat Rejection/Lap Leakage Control - Increasing the system pressure directly increases the heat rejection if valve leakage can be controlled at the same level. If valve leakage also increases the heat rejection increases further. The design of hydraulic components for higher pressure reduces the diameter of the control valve spool. Test fixtures approximating the smaller control valve assemblies were made to obtain leakage rate data as a function of fluid type, temperature and spool metering orifice overlap, using two typical spool and sleeve block assemblies of 3/16 and 1/4 inch nominal bore size. (See Figure 38).

Parts were made of 440C steel. Critical spool/ sleeve block areas were done at National Water Lift, Kalamazoo, Michigan. Critical dimensions were .000050 diametrical clearance for the spool in the high pressure-port-to-return interface and .000010 diametrical clearance for the high-pressure-to-case-drain area. The latter dimension also serves as a pilot to control the eccentricity of the test lap.

Tests were performed by varying the spool/metering land axial location and measuring the leakage past the land for MIL-H-5606, MIL-H-83282, Skydrol and CTFE fluid under the same conditions. The test system is shown in Figure 39. Results (with spool bore eccentricity data) were compared to theoretical estimates from the annular orifice equation (See Figure 40).

1. OPERATING AND OTHER REQUIREMENTS WERE DEFINED PER PROCUREMENT SPECIFICATION AND FORMAL STRESS REPORT.
2. BASELINE CRITERIA AND DATA WERE ESTABLISHED, INCLUDING MATERIAL SELECTION, MATERIAL ALLOWABLES, DETAILED WEIGHT BREAKDOWN, STIFFNESS (WHERE APPLICABLE), AND FLUID PROPERTIES.
3. THE EXISTING ACTUATOR IS REVIEWED AGAINST PROPOSED PROCEDURE.
4. MATERIAL PROPERTIES ARE DERATED FOR 275°F SERVICE.
5. THERE IS DECREASED FLOW DAMAGE DUE TO INCREASED PRESSURE.
6. SHRINK FIT COMPONENTS ARE USED, WHERE POSSIBLE, TO ELIMINATE SEALS.
7. COMMONALITY OF REDESIGN WITH EXISTING UNIT IS REQUIRED, WITH THE SAME ROD END AND PISTON ROD.
8. EXISTING GEOMETRY AND ATTACHMENT HARDWARE ARE USED. PISTON ROD THICKNESS IS SELECTED FOR MODIFIED LVDT DIMENSIONS.
9. CYLINDER BORE AND PISTON ROD DIAMETER ARE ESTABLISHED TO MEET DESIGN FORCE OUTPUT IN TENSION AND COMPRESSION, NEGLECT STANDARD "O" RING DIMENSIONS.
10. THE DESIGNS WERE MODIFIED TO ELIMINATE VENT BETWEEN SEALS AND POSSIBLY USE LVDT OUTER CASE AS BALANCE AREA.
11. BARREL, PISTON ROD, THREAD RELIEFS, ETC., WERE SIZED AND CHECKED FOR A POSITIVE MARGIN.
12. PISTON ROD WAS CHECKED FOR PRESSURE COLLAPSE.
13. BORE (PISTON DIAMETER) WAS SIZED BY PRESSURE AND LOAD.
14. WALL THICKNESS WAS BASED ON CYLINDER BREATHING ALLOWABLES.
15. PISTON ROD THICKNESS AND CYLINDER WALL WERE DETERMINED USING STRESS MANUAL LOADS AND MOMENTS.
16. CYLINDER WALL THICKNESS WAS DESIGNED TO A POSITIVE MARGIN IN THE HOOP STRESS FOR BURST PRESSURE AND CHECKED FOR RADIAL EXPANSION TO ENSURE PROPER SEALING.
17. CYLINDER AND PISTON ROD WERE CHECKED FOR COMBINED AXIAL, MOMENT LOADS.
18. ACTUATOR WAS CHECKED FOR COMBINED BEAM COLUMN ANALYSIS.
19. A 0.060 IN. RADIUS CYLINDER BORE RELIEF GROOVE WAS INCLUDED.
20. THE CYLINDER "BOTTOMED-OUT" CONDITION WAS CHECKED.

GP23-0650-200

Figure 50.

DESIGN PROCEDURES/APPROACH/GROUND RULES

21. MANIFOLD DESIGN IS BASED ON HOOP STRESS AND FATIGUE WITH INFINITE LIFE FOR PRESSURE CYCLING.

22. MANIFOLD PASSAGE SIZE IS DICTATED BY GOOD MACHINING PRACTICE (HOLE DIAMETER TO HOLE DEPTH). CURRENT LEE PLUG STANDARD SIZES LIMIT THE SMALLEST HOLE DIAMETER TO 0.620 INCH. HIGH BURST PRESSURE MAY RESTRICT THE USE OF LEE PLUG DESIGNS.

23. NO LOAD RATE AND MAX FORCE OUTPUT ARE MAINTAINED. HOWEVER LARGER PRESSURE LOSS (ΔP) WILL BE USED IN MANIFOLD SIZING.

24. MANIFOLD MATERIAL WILL BE TITANIUM FOR THIS STUDY BECAUSE ALUMINUM IS NOT FEASIBLE FOR PRESSURES GREATER THAN 5,500 PSI. THE BASELINE MANIFOLD WILL BE ANALYZED USING TITANIUM.

25. FATIGUE ANALYSIS WAS MADE ON STRESS CONCENTRATED AREAS IN FINAL DESIGN SELECTION (STRESS MANUAL LOADS AND MOMENTS ARE BASED ON HEAVIER AND DIFFERENT WEIGHT DISTRIBUTION FOR VIBRATION AND "g" LOADING).

26. WEIGHT ESTIMATE WAS MADE FOR FINAL CONFIGURATION. ESTIMATES WERE BASED ON EXISTING WEIGHT, LESS CHANGE IN WEIGHT FOR THE SAME PART AT HIGHER PRESSURES. WEIGHTS WERE DETERMINED BY VOLUME AND DENSITY.

27. INITIAL STIFFNESS ESTIMATES WERE MADE USING IN-HOUSE COMPUTER PROGRAM FOR VARIOUS FLUIDS.

28. THE IMPACT OF TRUNNION MOUNTED ACTUATOR WAS EVALUATED TO IMPROVE TOTAL STIFFNESS REQUIREMENT, WERE APPLICABLE.

GP23-0550-270

Figure 50. (Cont.)
DESIGN PROCEDURES/APPROACH/GROUND RULES

Pressure related design margins of safety were obtained from the formal Stress Report, MDC A1063 (Reference 8), for eight components of the F-15 stabilator cylinder assembly. An analysis shows that burst pressure designed only 26.2% of the critical stress areas, and proof pressure influenced 49.2%. The remaining 24.6% dealt with fatigue life.

Only 10% of the margins of safety checked were below 15%, and 5% were 10% or lower. This indicates a conservative design approach. The eight components checked were, center dam, forward piston head, bolts, piston rod, forward and aft cylinder, rod end, pressure balance tube. From these components, 61 pressure related margins of safety were evaluated, with the following breakdown in which requirement dictated the design.

Proof	Burst	Fatigue
30	16	15

Review of the F-15 stabilator servoactuator qualification test results suggest a conservative approach has been taken in most designs. Stress analysis design points were checked against qualification test failures. Four failures due to lack of structural integrity were noted, covering three cylinder component failures (port housing, bolt, lug bushing) and one manifold failure (due to wall thickness).

The large number of failures associated with the mechanical input linkage and electro/mechanical components were principally due to vibration and impulse cycling.

Burst pressure values currently come from military requirements. The current "2.5 x the operating pressure equals burst pressure" is based on 1.67 hydraulic factor x 1.5 material factor (Reference 9, Paragraph 32.211). The 1.67 hydraulic factor = 1.5 fitting factor x 1.45 to account for pressures surges and repeated stress (Reference 9, Paragraph 32.2115, 1.67 factor may be reduced, based on thorough endurance strength evaluation). The 1.5 material factor is based on a positive margin when units are tested at 1.5 times the operating pressure (termed "proof pressure").

Comments

o Burst pressure and proof pressure should be more closely related to transient pressures in the system, as transients would be the primary mechanisms in developing peak pressures.

o Minimum margins should be employed, with more extensive testing to uncover potential weak areas to achieve minimum weight.

2.3.2.2.1 F-15 Study Results - The weights of the actuators on the F-15 Aileron, Stabilator, Bypass Door, Diffuser Ramp, and Main Landing Gear were estimated for 5500, 8000 and 10,000 psi systems using the design criteria established in 2.3.2.1.

a) F-15 Aileron - The envelope and a schematic cross section of the actuator are presented in Figure 51. The unit is a manually controlled, single hydraulic system actuator. For the 3000 psi production unit envelope requirements, the output is achieved by use of tandem pistons. In the event hydraulic supply pressure is lost, the integral bypass valve switches to the damping mode to prevent surface loss due to flutter.

Figure 52 presents a weight vs system pressure graph delineating the weight trend of the F-15 aileron actuator. It shows the dry, MIL-H-5606 fluid, and CTFE fluid points for 3000 psi, 5500 psi, 8000 psi, and 10,000 psi.

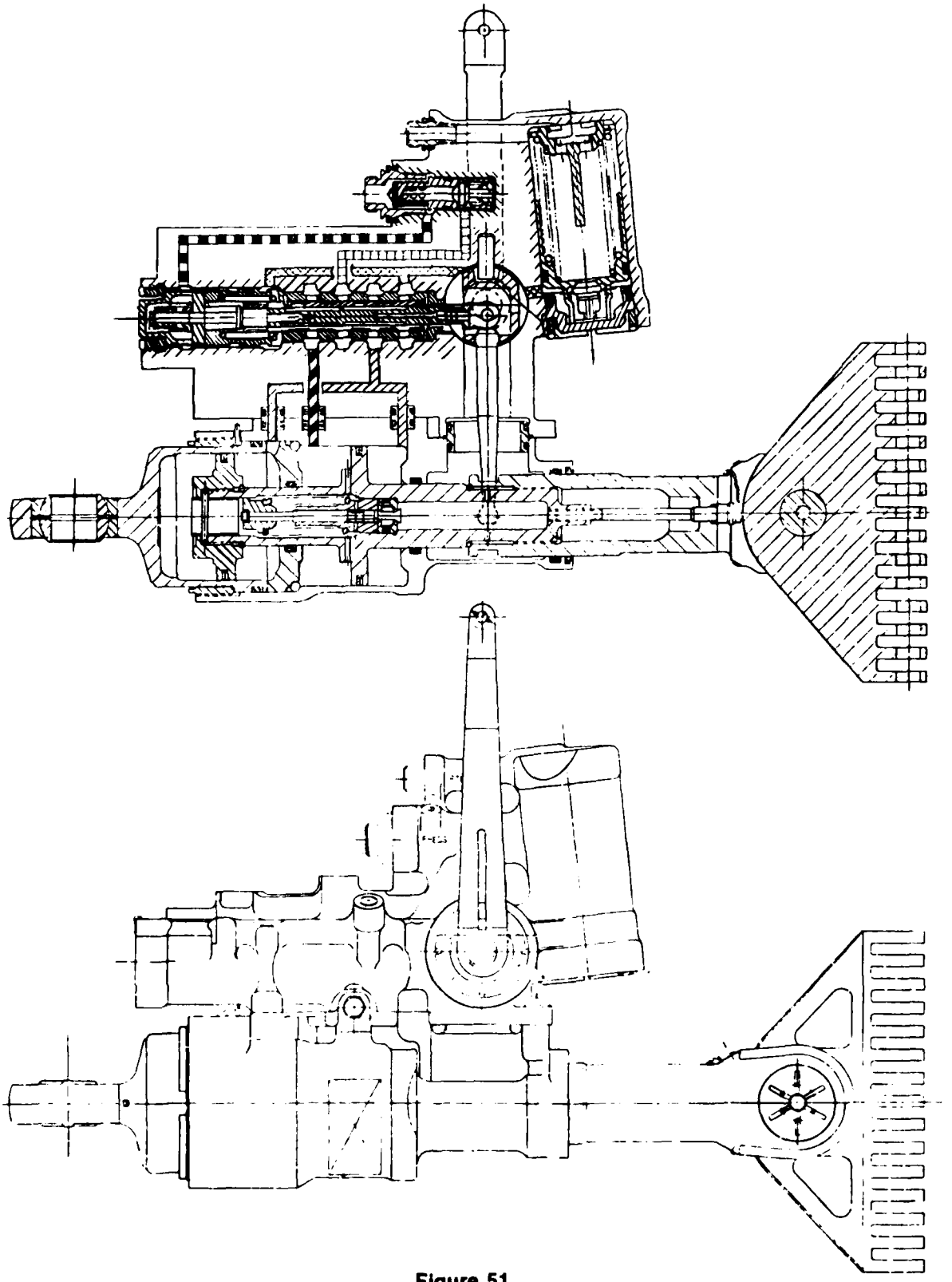

GP23-0550-40

Figure 51.
F-15 AILERON

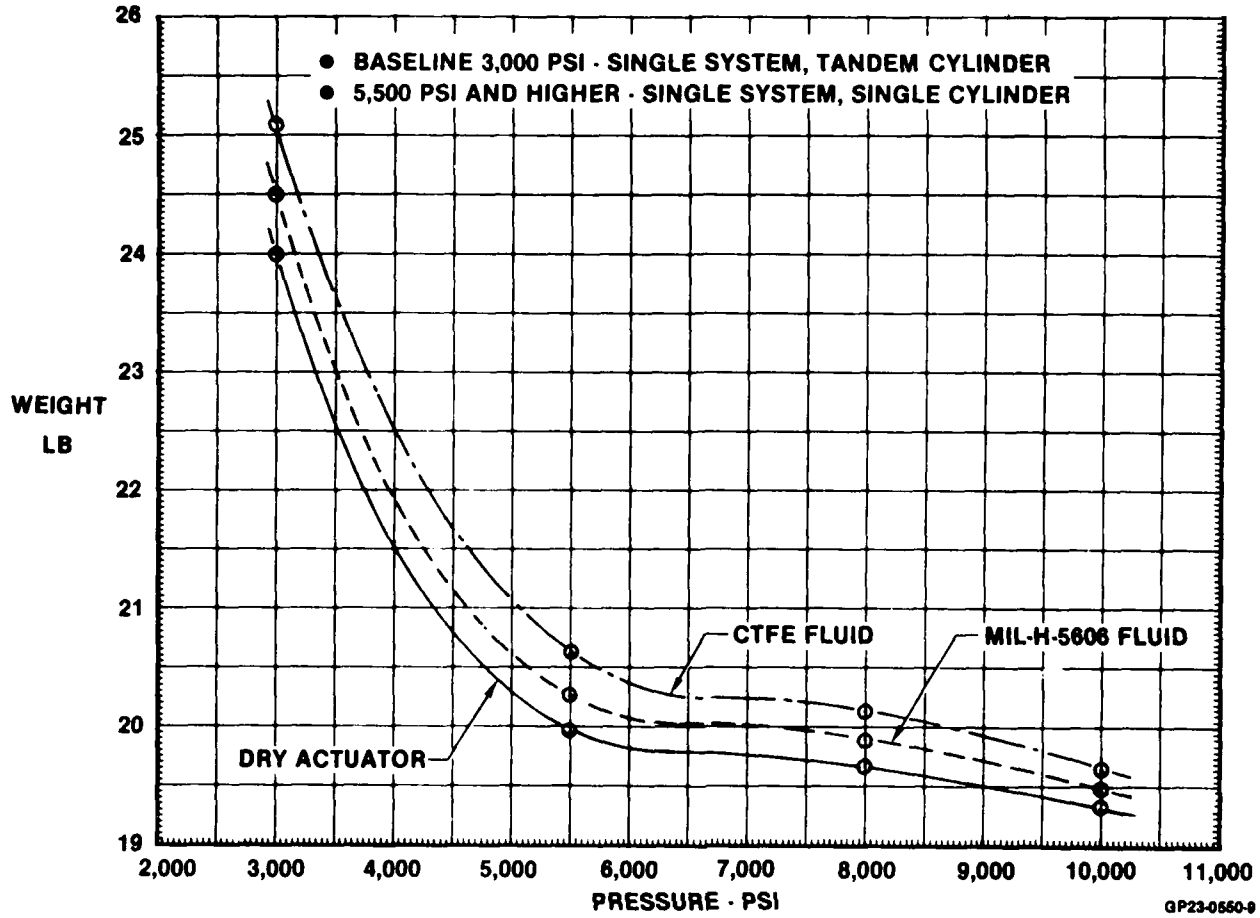

Figure 52.
HIGH PRESSURE HYDRAULIC STUDY F-15 AILERON CYLINDER ASSEMBLY
Weight vs Pressure

The weight savings predicted in going from 3000 to 5500 psi is quite dramatic. The 8000 and 10,000 psi weights show only a modest trend toward lower weights. The switch from tandem pistons required at 3000 psi to single pistons at higher pressures accounts for the dramatic occurrence between 3000 and 5500 psi. The more efficient envelope is one of the advantages of higher system pressures.

The trends in weight for the CTFE actuator are as follows:

Pressure Increment	Weight Savings (%)
3,000 to 5,500 psi	4.4 lb (17.53%)
5,500 to 8,000 psi	0.5 lb (2.4%)
8,000 to 10,000 psi	0.5 lb (2.5%)

b) F-15 Stabilator - The envelope and main ram cross section of the stabilator actuator are shown in Figures 53 and 54. The unit has a dual tandem main ram and is manually controlled. A fail soft dual channel electronics control augmentation system (CAS) is integrated into one of the hydraulic systems and associated manifold. Two electro hydraulic valves are required. A hydraulic operated bayonet, centering spring, and orifices are required to control CAS turn on/turn off transients. The manual control is always active in controlling a dual tandem spool and sleeve valve. The CAS controls the position of a concentric sleeve valve which can modify the manual inputs as necessary for control augmentation. The hydraulic schematic is presented in Figure 55.

The 5500, 8000, and 10,000 psi main ram cross sections for the F-15 stabilator are presented in Figure 56. The weight vs system pressure results for the main ram are presented in Figure 57. The minimum weight vs pressure is approximately 8000 psi. A 10.5 lb weight savings (27%) is predicted for a CTFE system at 8000 psi vs 3000 psi using a titanium center dam.

It should be noted that stiffness requirements were not considered for this portion of the study. This actuator is stiffness sensitive, and stiffness requirements were to be evaluated at the selected pressure.

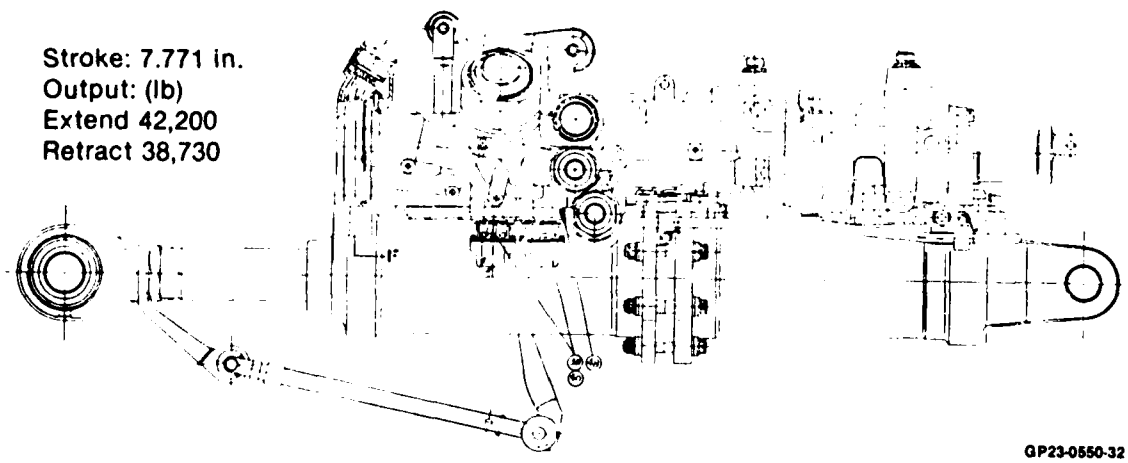

Figure 53.
F-15 STABILATOR SERVOACTUATOR

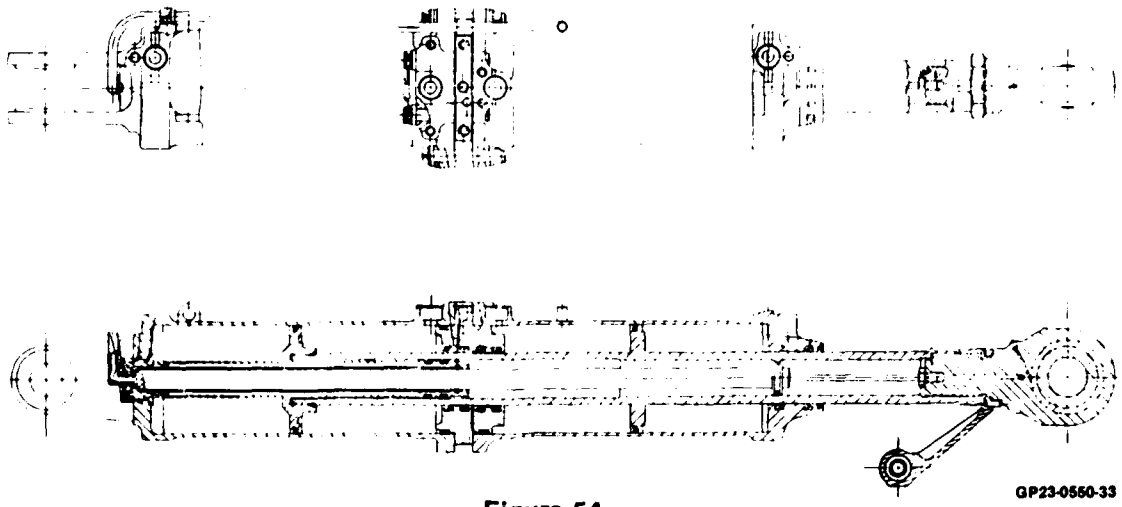

Figure 54.
F-15 STABILATOR ACTUATOR DETAIL

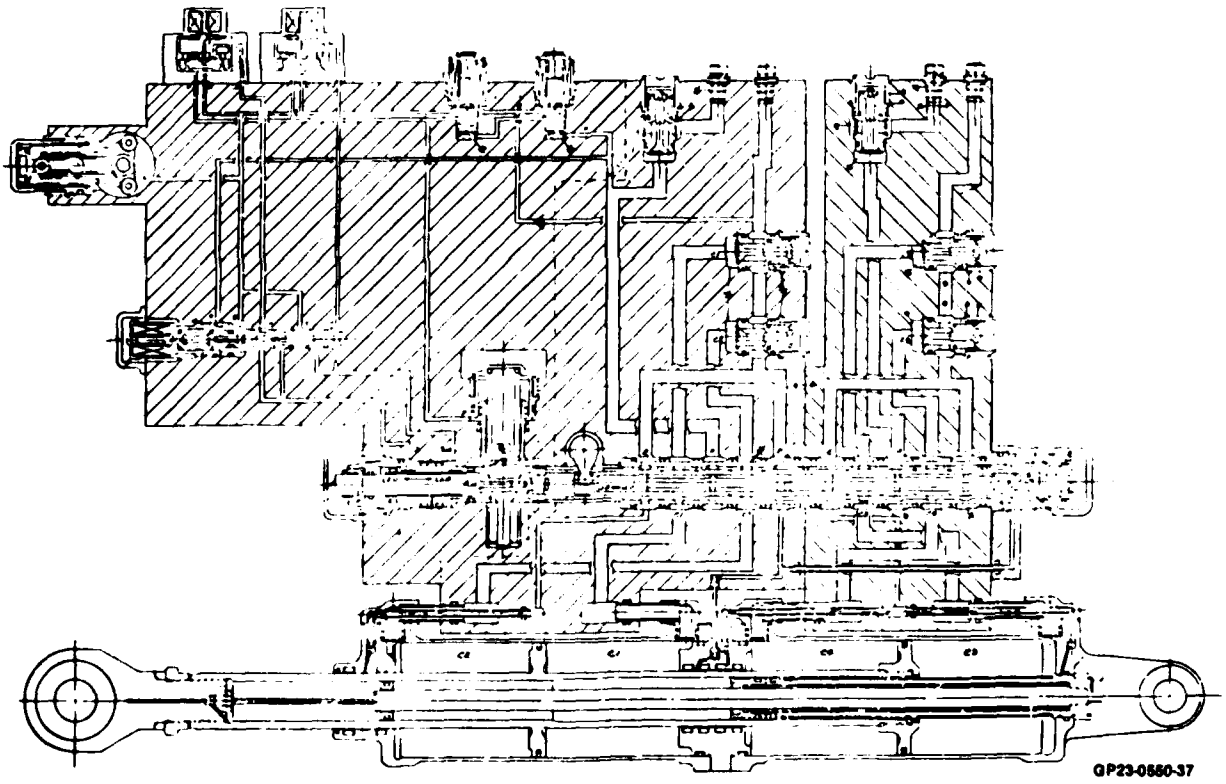

Figure 55.
F-15 STABILATOR HYDRAULIC SCHEMATIC

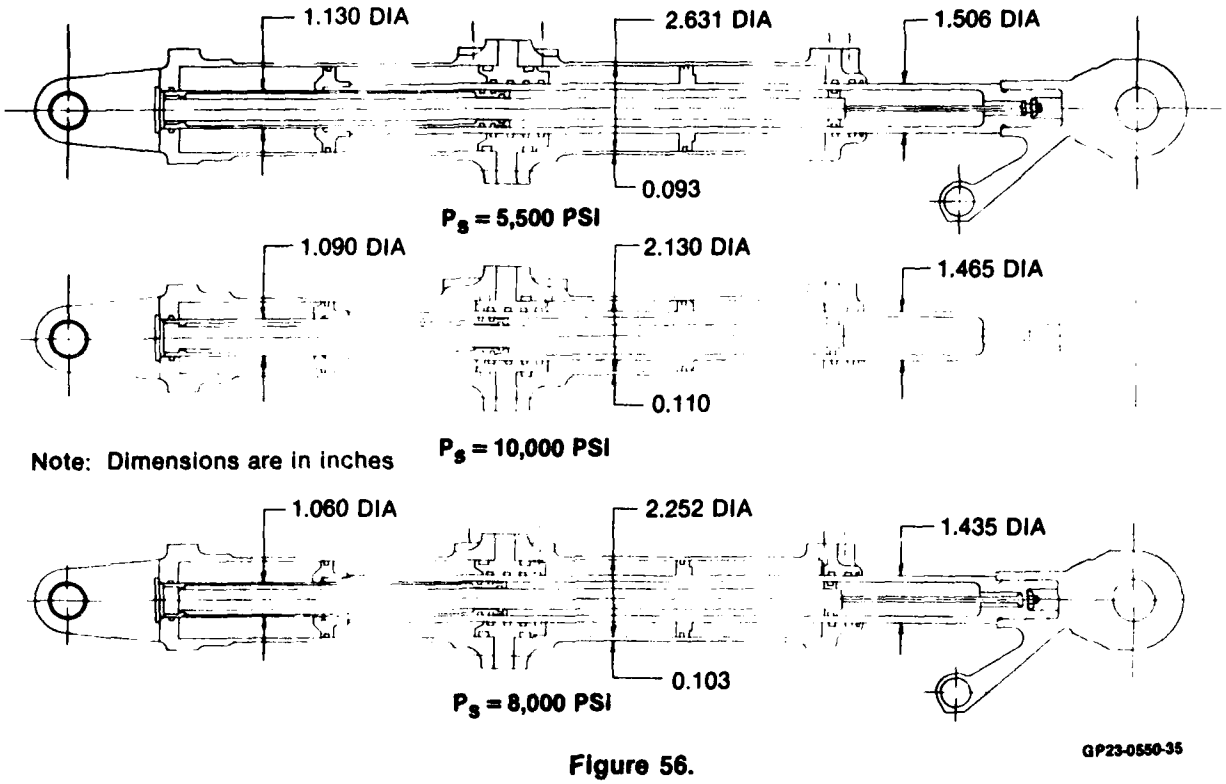

Figure 56.
F-15 STABILATOR ACTUATOR
Design vs Pressure

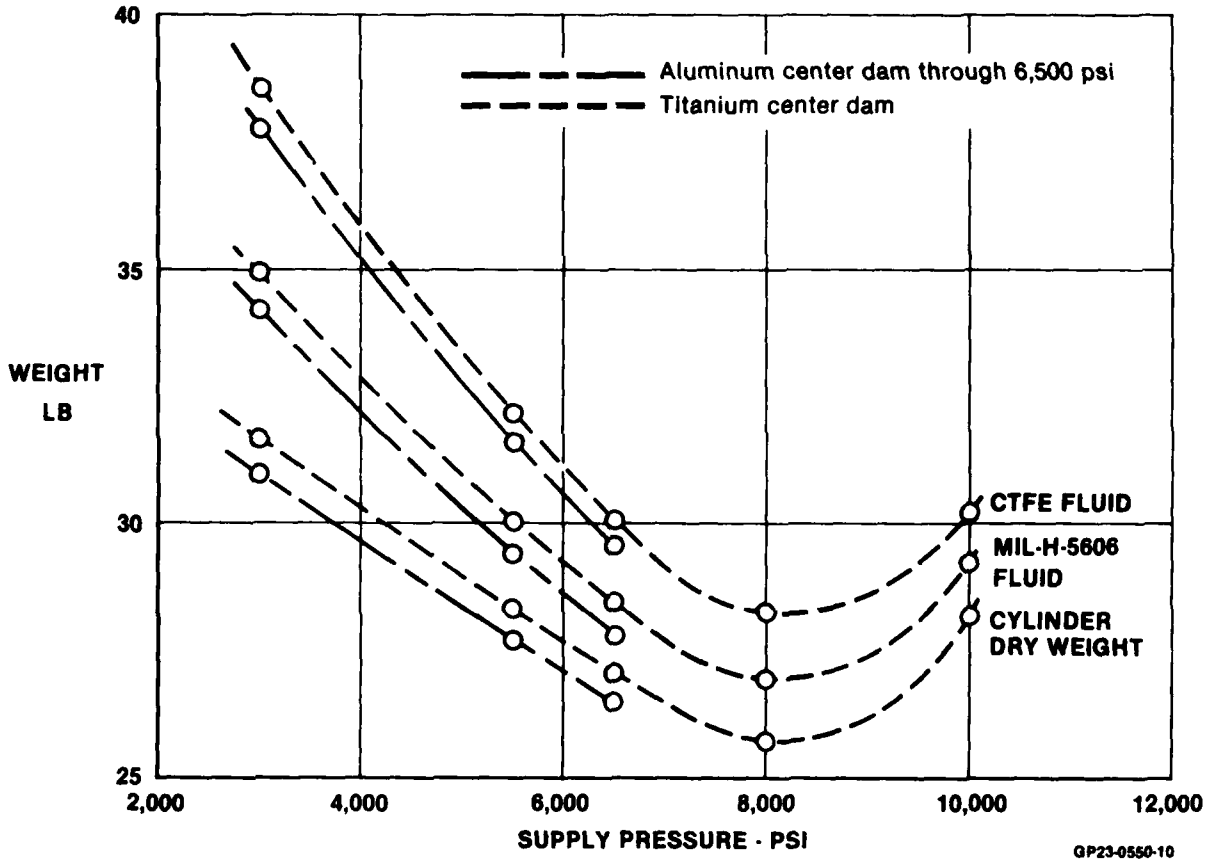

Figure 57.
HIGH PRESSURE HYDRAULIC STUDY F-15 STABILATOR CYLINDER ASSEMBLY
No Manifold

The manifold was also considered independently. The production 3000 psi manifold configuration is presented in Figure 58. The weight vs system pressure analytical results are presented in Figure 59. The difference in dry weights for the two fluids are caused by the difference in design criteria.

Titanium was the manifold material, along with shrink fit valves for higher pressures. The production configuration used aluminum and valve sleeves with "O" ring seals.

There is no weight savings in the manifold at higher pressures. In fact, the trend is a slight weight increase. However, the use of titanium and shrink fit valves results in a modest weight savings over the aluminum/standard valve production unit. (23.4 vs 26.1 lb)

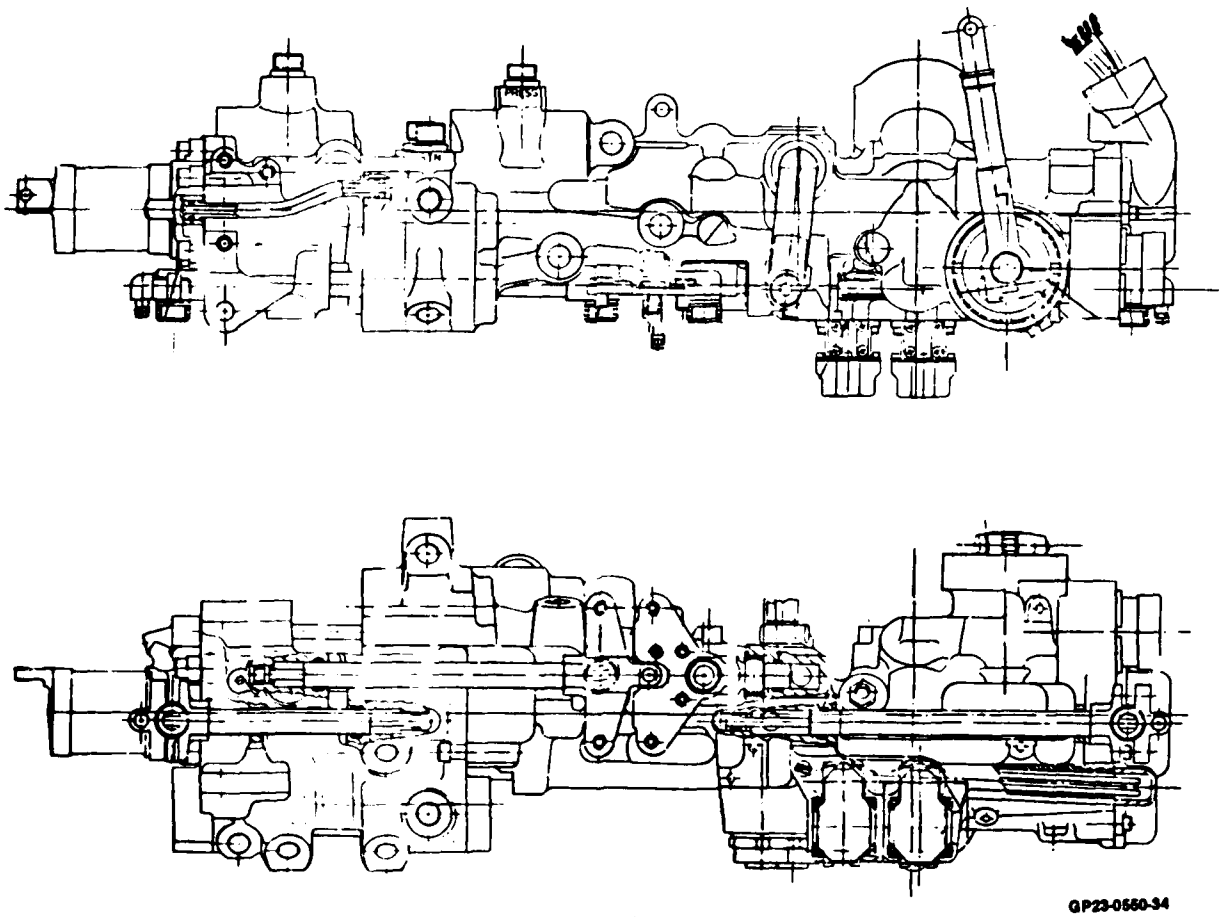

Figure 58.
F-15 STABILATOR MANIFOLD

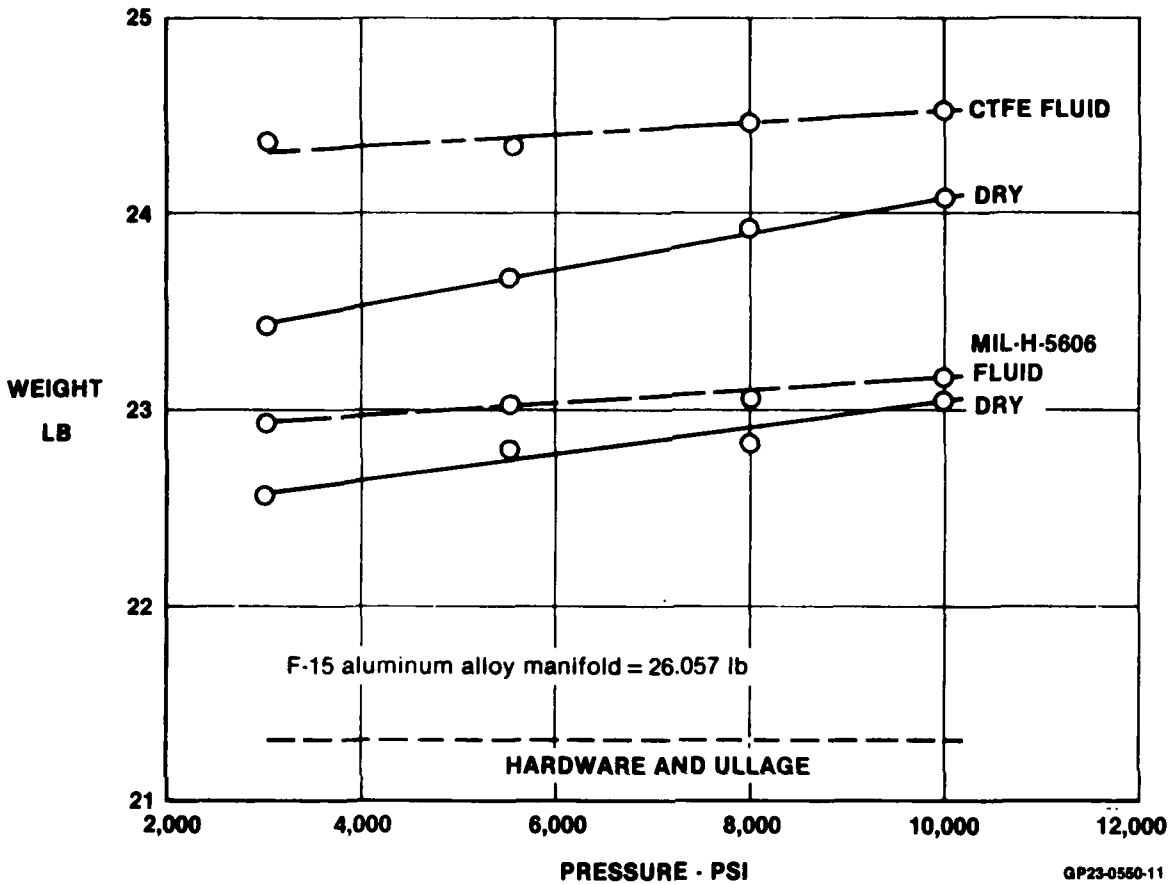

Figure 59.
HIGH PRESSURE HYDRAULIC STUDY F-15 STABILATOR MANIFOLDS
Titanium and Shrink-Fit Valves Weight vs Pressure

The combined main ram-manifold weight trend is presented in Figure 60. Since the manifold weight vs pressure change is minimal, the combined weight shows approximately the same optimum pressure-weight point as the main ram alone. The weight savings at 8000 psi (the optimum point) is 10.8 lb.

c) Bypass Door Actuator - The bypass door actuator is one of three required for controlling the air inlet flow to each engine. It is a single hydraulic system actuator controlled by a two stage electro-hydraulic valve. The actuator envelope and cross section are presented in Figure 61.

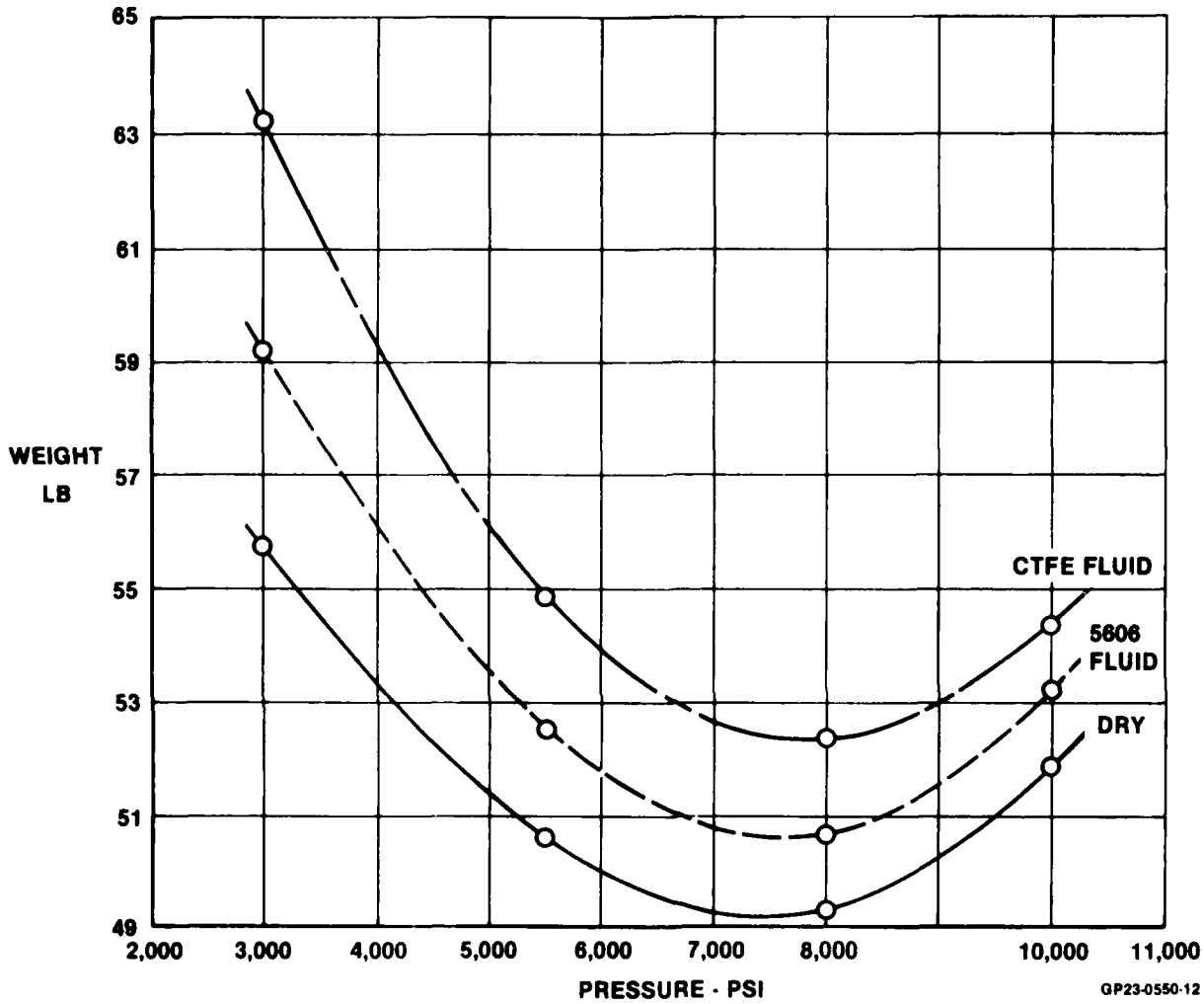

Figure 60.

HIGH PRESSURE HYDRAULIC STUDY F-15 STABILATOR CYLINDER ASSEMBLY
Weight vs Pressure

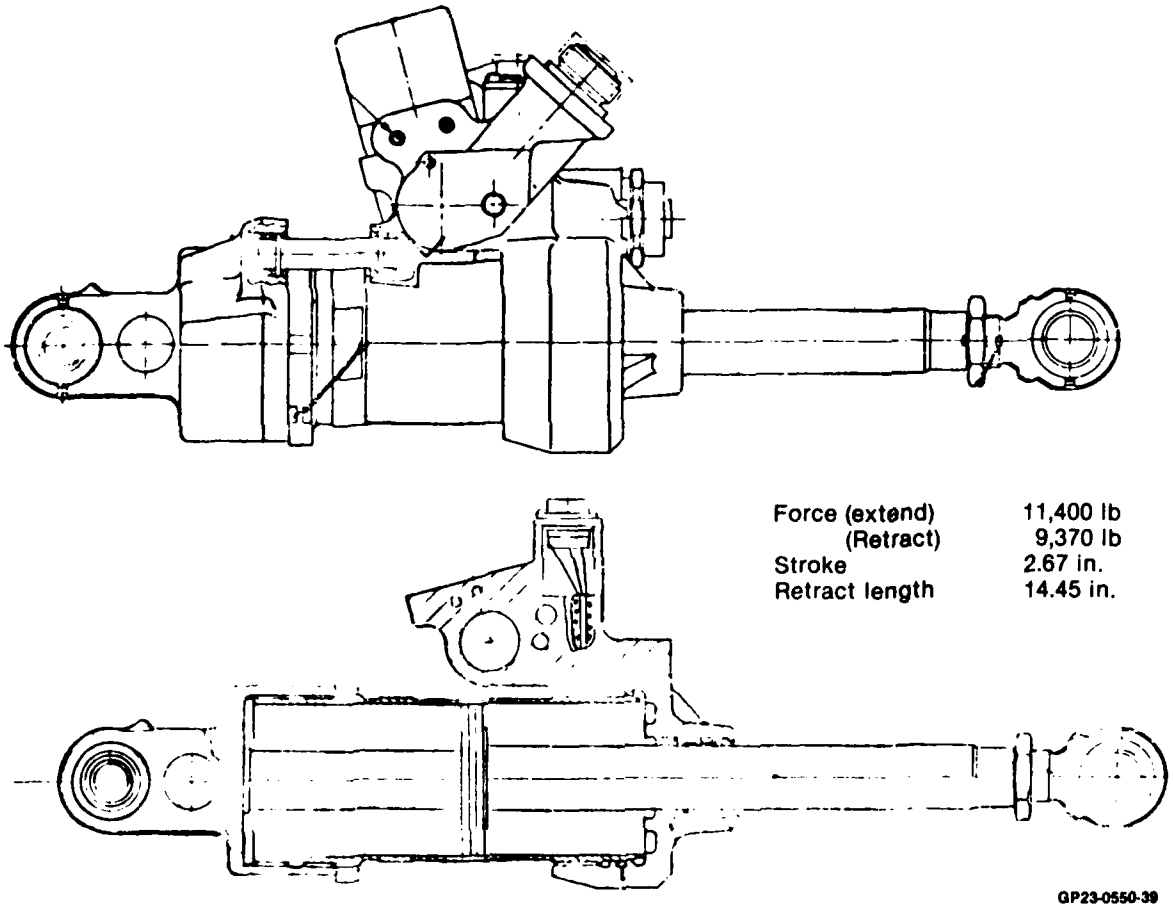

Figure 61.
BYPASS DOOR SERVOACTUATOR

The results of the weight-pressure trend study are shown in Figure 62. Data for both CTFE and MIL-H-5606 fluids is presented. Since the peak pressure with the CTFE required a more conservative design criteria, there is a dry weight penalty of 0.3 lb, as shown at 8000 psi. For the CTFE filled actuator the lowest weight is at approximately 8000 psi.

d) Diffuser Ramp Actuator - This actuator is also used in the engine air inlet control system. The unit is a single system "control-by-wire" configuration. A two stage electro hydraulic valve is used for control. The envelope and main ram cross section are presented in Figure 63. The weight vs pressure trend is given in Figure 64. The optimum pressure for lightest weight with the CTFE fluid is 8000 to 10,000 psi.

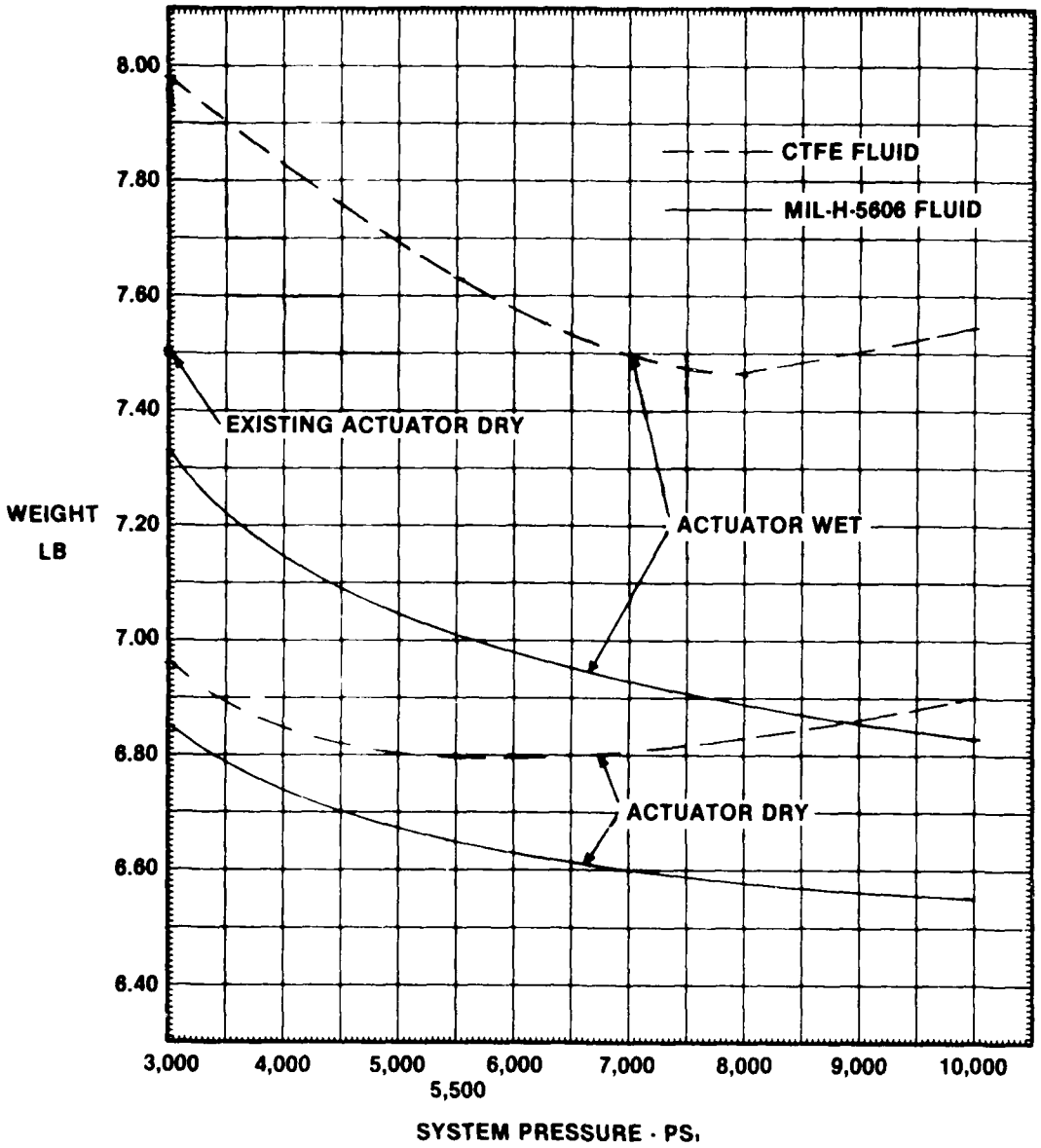

REDESIGN OF 3,000 PSI UNIT MADE TO REMOVE UNNECESSARY CYLINDER LENGTH

Figure 62. GP23-0550-13

BYPASS DOOR ACTUATOR

Weight vs Pressure

AD-A157 618 FLIGHT WORTHINESS OF FIRE RESISTANT HYDRAULIC SYSTEMS 2/4
VOLUME 1(U) MCDONNELL AIRCRAFT CO ST LOUIS MO
J R JEFFERY ET AL. DEC 84 AFWAL-TR-84-2085
UNCLASSIFIED F33615-80-C-2074 F/G 13/7 NL

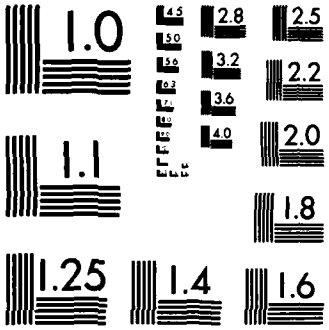

MICROCOPY RESOLUTION TEST CHART
NATIONAL BUREAU OF STANDARDS-1963-A

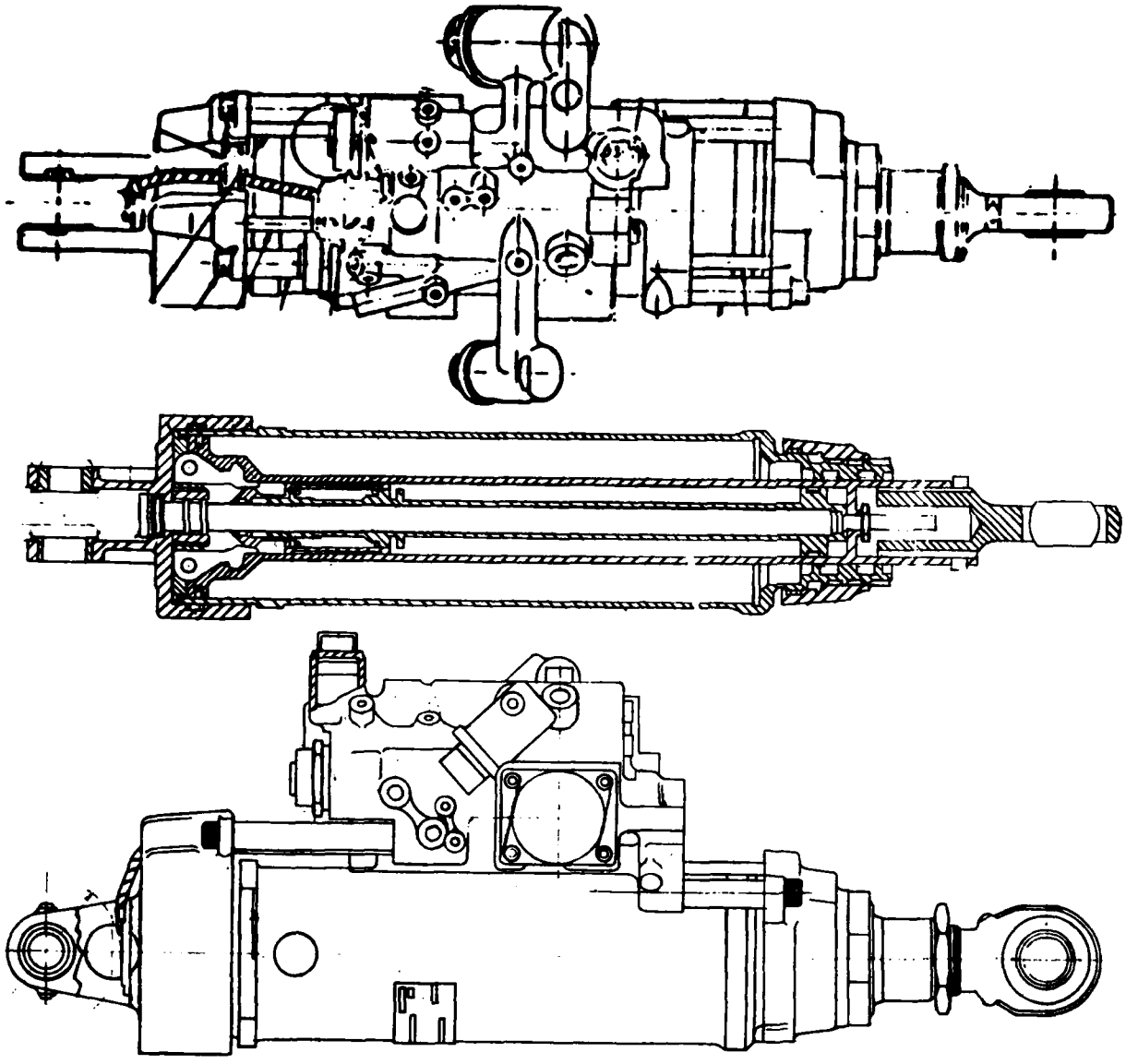

Force (extend)	20,300 lb
(retract)	15,210 lb
Stroke	10.17 in.
Retract length	18.41 in.

Cylinder locks when retracted

LVDT included for position control

Locking fingers changed to ball at higher pressures due to decreasing space

GP23-0550-38

Figure 63.
DIFFUSER RAMP SERVOACTUATOR

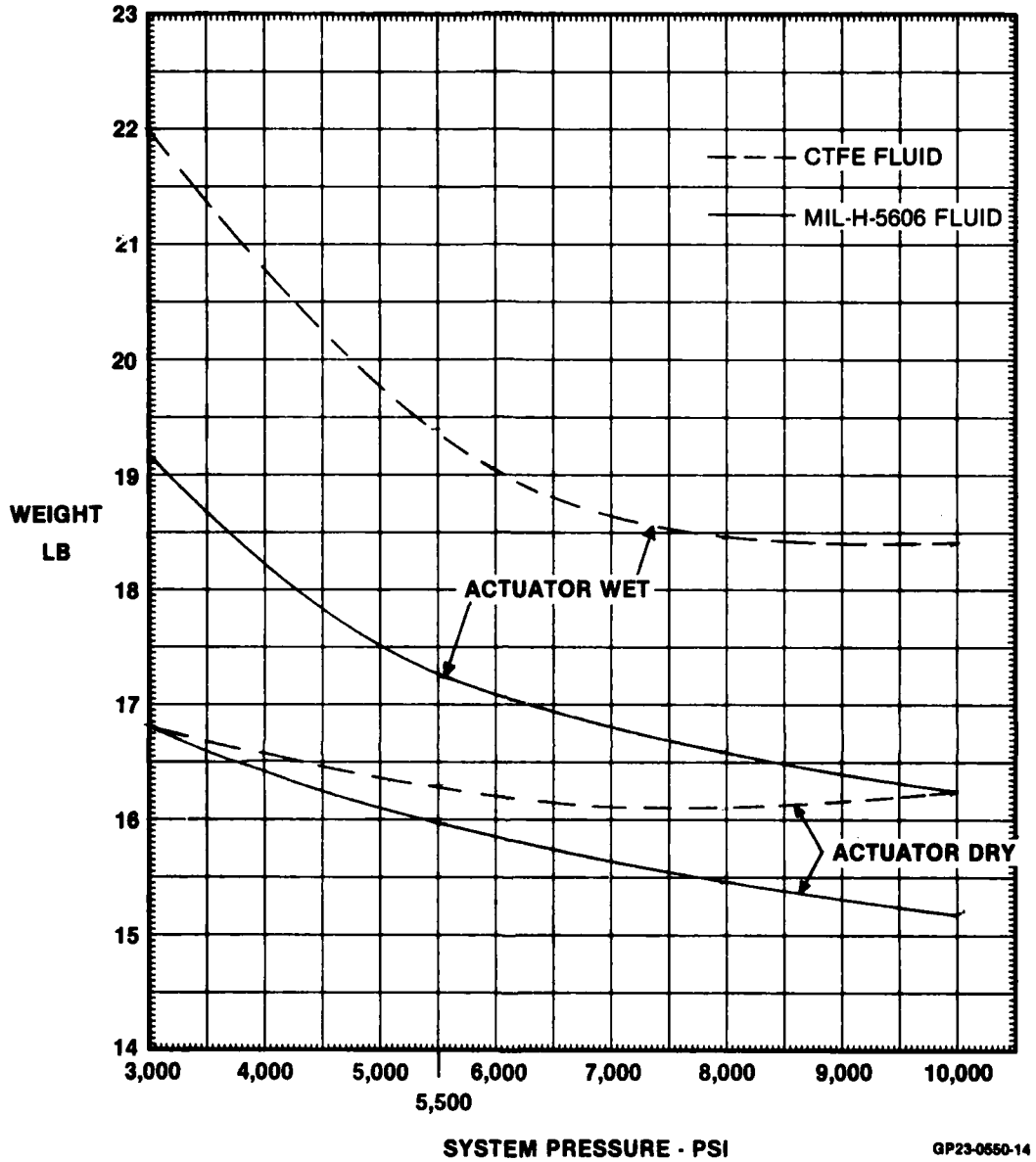

Figure 64.
DIFFUSER RAMP ACTUATOR
Weight vs Pressure

e) Main Landing Gear Actuator - The envelope, cross-section, and output force and stroke are presented in Figure 65. The actuator is a simple single hydraulic system linear type. The weight vs pressure results are presented in Figure 66. The lightest weight is at 8000 psi system pressure. Again, the more conservative design criteria requirements used with CTFE fluid result in a dry weight penalty of about one pound (8.5%).

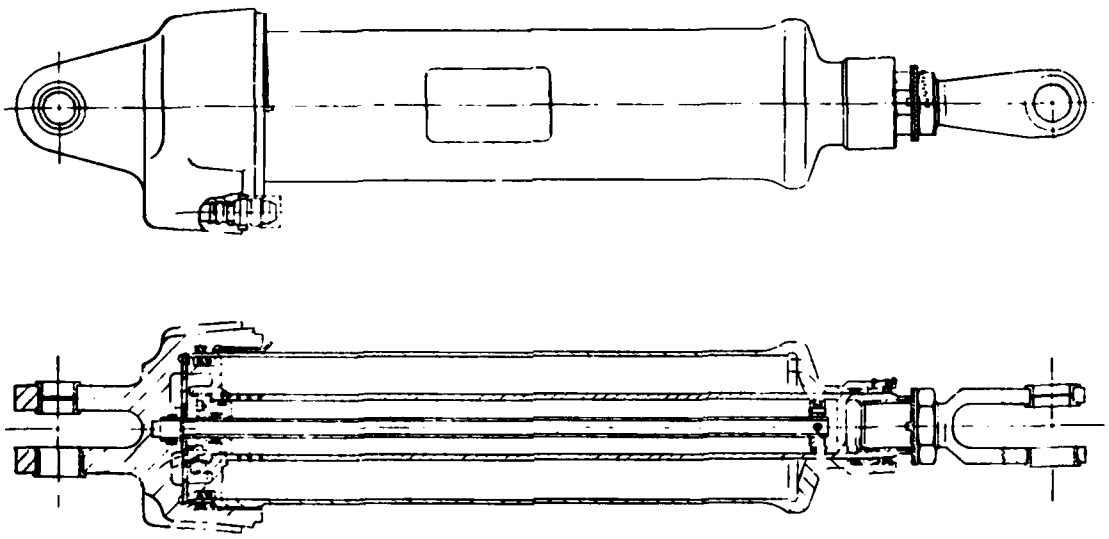

Force (extend)	19,060 lb
(retract)	15,080 lb
Stroke	11.42 in.
Retract length	20.10 in.

GP23-0550-36

Figure 65.

MAIN LANDING GEAR ACTUATOR

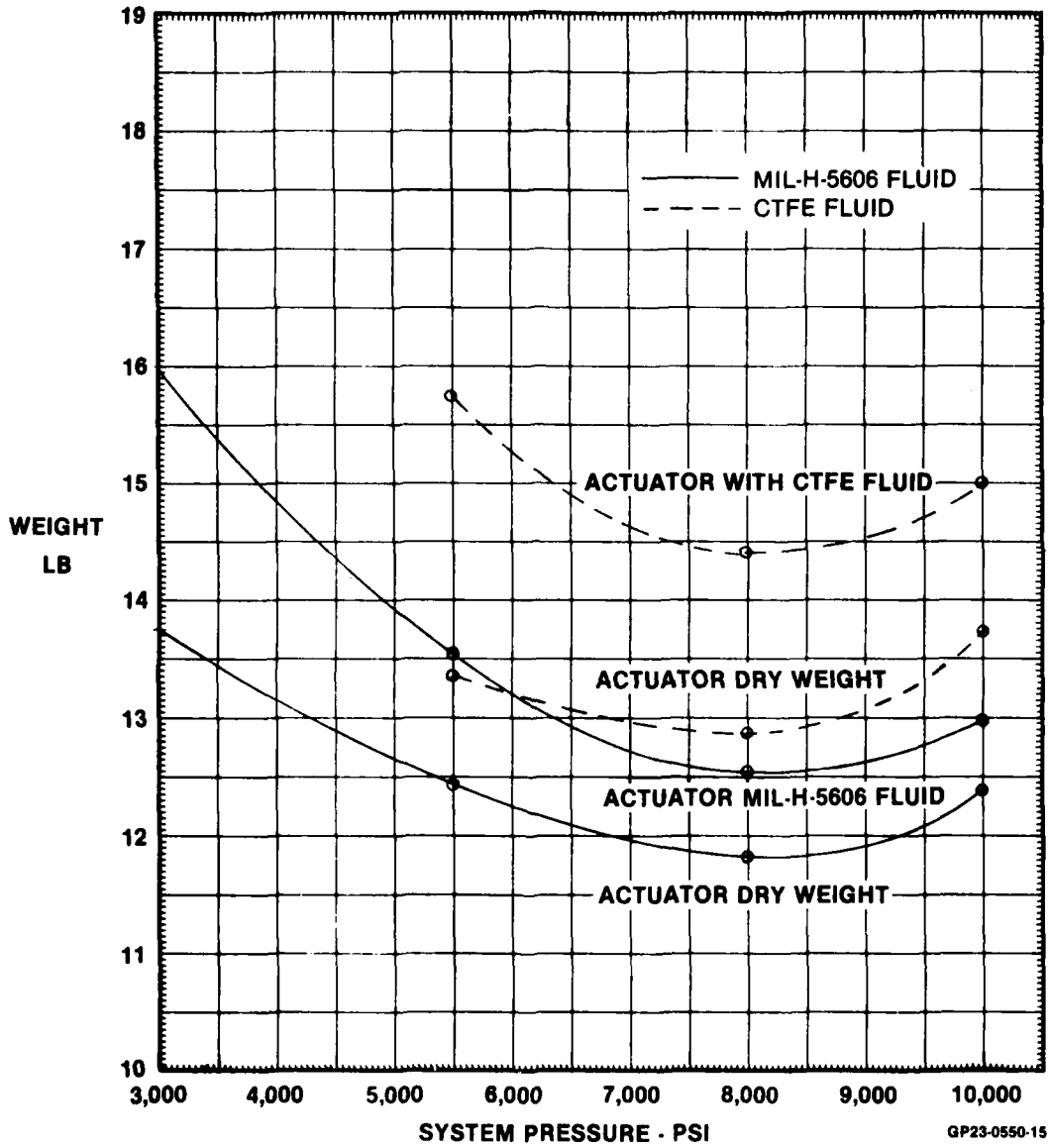

Figure 66.

MAIN LANDING GEAR ACTUATOR
Weight vs Pressure

The five actuators were combined into the equivalent of one aircraft quantity requirement, Figure 67. The 8000 psi system pressure gives the lightest summed actuator weight. The dry weight savings is approximately 12.4% over the 3000 psi system dry weight.

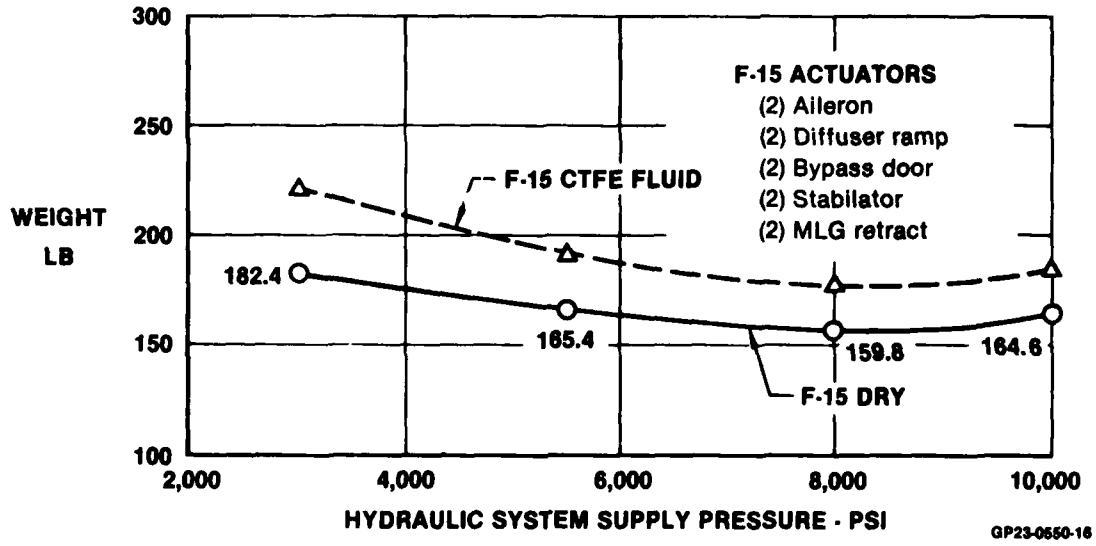

Figure 67.

Σ ACTUATOR WEIGHTS vs HYDRAULIC SYSTEM PRESSURE

2.3.2.2.2 KC-10A Study Results - The KC-10A spoiler, inboard elevator, main landing gear retract, and main gear door retract actuators were picked for weight vs system pressure evaluation on the 3000, 5500, 8000, and 10,000 psi systems. Figure 68 presents the component dry weight and reasons for selection of the four actuators. The ground rules and assumptions for the study are given in Figure 69. The procedure used in sizing the actuators is given in Figure 70.

COMPONENT	UNIT WEIGHT, DRY (LB)	REASON FOR SELECTION
MAIN LANDING GEAR RETRACT ACTUATOR	91.4	UTILITY FUNCTION LONG STROKE, LARGE DISPLACEMENT PULLS TO RETRACT GEAR
MAIN GEAR DOOR RETRACT ACTUATOR	17.4	UTILITY FUNCTION FLOW TO BOTH ENDS TO EXTEND ACTUATOR EXTENDS AND RETRACTS EACH CYCLE
SPOILER ACTUATOR	13.3	CONTROL AND LIFT FUNCTION MUST RESIST HIGH IMPOSED AIR LOADS RELATIVELY SHORT STROKE TEN SPOILERS PER AIRCRAFT
INBOARD ELEVATOR ACTUATOR	125.6	FLIGHT CONTROL FUNCTION TANDEM ACTUATOR RELATIVELY LARGE MANIFOLDS MANIFOLD MATERIALS CONFIGURATION IS REPRESENTATIVE OF REST OF FLIGHT CONTROL ACTUATORS (AILERONS, RUDDERS, AND OUTBOARD ELEVATORS)

GP23-0550-17

Figure 68.
KC-10A COMPONENTS STUDIED

- **MAINTAIN ACTUATOR INSTALLATION GEOMETRY**
  - MOMENT ARM
  - STROKE
  - RATES
- **MAINTAIN END ATTACHMENT CONFIGURATION AND SIZE**
- **SAME ACTUATOR MAXIMUM FORCE OUTPUT CAPABILITY**
  - EXTENDING
  - RETRACTING
- **SAME IMPOSED LOADS ON ACTUATOR (EXCEPT WHILE SPECIFIC COMPARISONS MADE)**
  - ULTIMATE COLUMN LOADS (PISTON ROD DIA)
  - ULTIMATE PRESSURES
- **BURST PRESSURE FACTORS ESTABLISHED FOR CONVENTIONAL FLUID WHERE THEY EXCEED IMPOSED LOAD PRESSURES**
- **NONSTANDARD CYLINDER BORE DIAMETERS**
- **SAME PORTING CONFIGURATION**
- **EXISTING LINE REPLACEABLE UNIT (LRU) PHILOSOPHY MAINTAINED**

GP23-0550-18

Figure 69.
STUDY GROUND RULES AND ASSUMPTIONS

- **MAINTAIN PISTON ROD DIAMETER**
- **SIZE CYLINDER BORE FOR RETRACT OUTPUT FORCE**
- **ADD STANDPIPE INSIDE CYLINDER TO MAINTAIN REQUIRED MAX EXTENDING OUTPUT FORCE (SIMPLE ACTUATORS)**
- **DETERMINE WALL THICKNESSES AND COMPONENT WEIGHTS**
- **DETERMINE FLOWS**
- **SIZE MANIFOLD FOR REDUCED FLOW REQUIREMENTS AND ELEVATED PRESSURES**

GP23-0550-19

Figure 70.
PROCEDURE FOR SIZING ACTUATORS

a) Main Landing Gear Actuator - The KC-10A main landing gear actuator is a relatively simple single system utility actuator. The actuator cross section is presented in Figure 71. The weight vs system pressure study results are given in Figure 72. The lightest dry weight pressure is below 3000 psi. The optimum pressure with MIL-H-5606 fluid is about 6000 psi. With the actuator filled with CTFE fluid, the pressure for lightest weight is approximately 8000 psi. (Approximately 16.9% weight savings - 142 lb @ 3000 vs 118 lb @ 8000.) A summary of the study findings is presented in Figure 73.

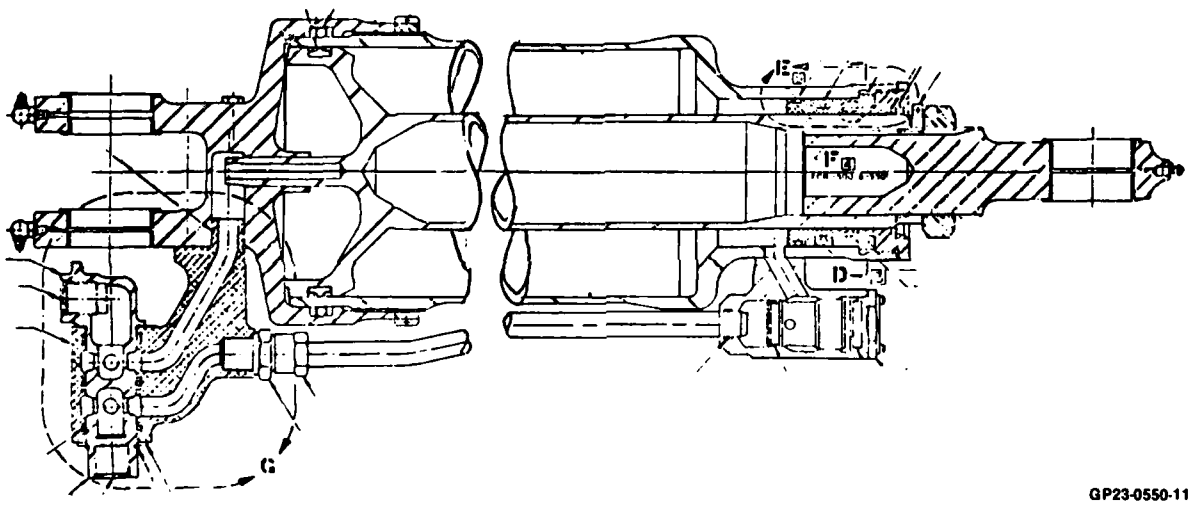

Figure 71.
KC-10A MAIN LANDING GEAR RETRACT ACTUATOR

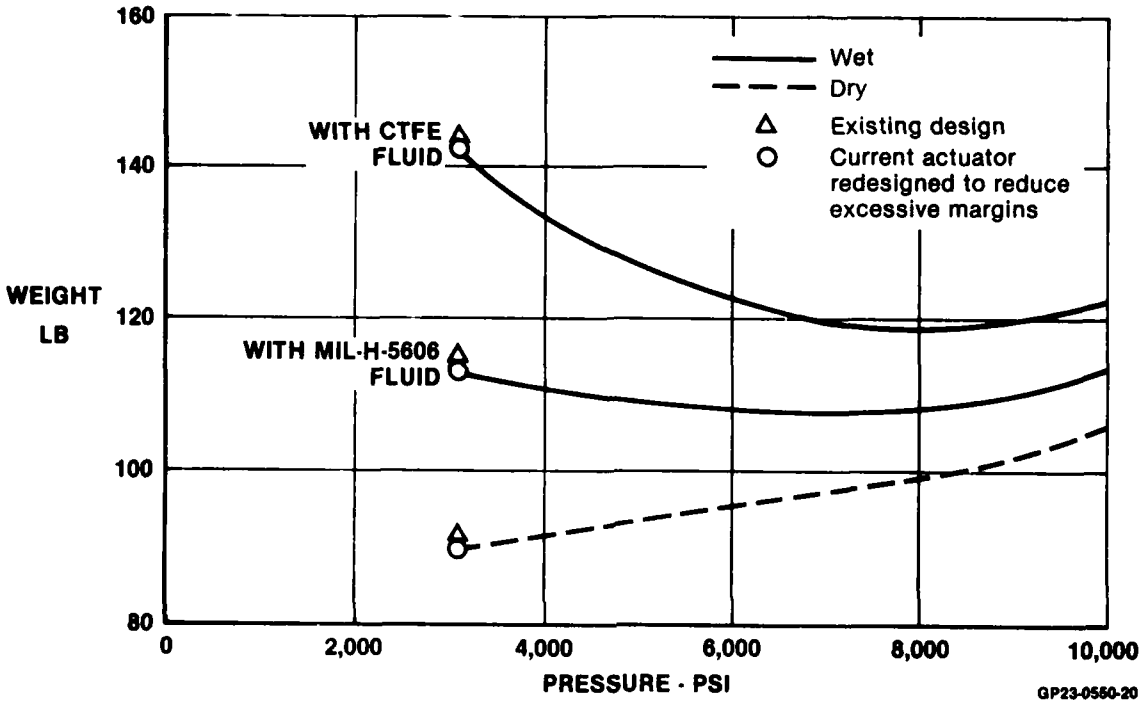

Figure 72.

MAIN GEAR RETRACT ACTUATOR

Weight vs Pressure

CHARACTERISTICS AND REQUIREMENTS

- **SIMPLE ACTUATOR**
- **RETRACTS TO RAISE GEAR**
- **EXTENDS TO LOWER GEAR**
- **MAX TENSION CHAMBER PRESSURE FROM EXTERNAL LOADS = 70% ABOVE OPERATING PRESSURE**
  - ULTIMATE PRESSURE GREATER THAN BURST PRESSURE
  - CANNOT TAKE FULL BENEFIT OF REDUCED BURST PRESSURE FACTORS AT HIGHER OPERATING PRESSURES

RESULTS

- **DRY ACTUATOR WEIGHT INCREASES WITH PRESSURE**
- **MINIMUM WET ACTUATOR WEIGHT**
  - 6,000 PSI FOR MIL-H-5606
    - 7% REDUCTION
  - 8,000 PSI FOR CTFE
    - 3% INCREASE
- **FLUID WEIGHT SIGNIFICANT**

GP23-0550-21

Figure 73.

MAIN LANDING GEAR RETRACT ACTUATOR STUDY FINDINGS

b) Main Gear Door Actuator - This actuator is shown in Figure 74. The unit is a relatively simple single system actuator. The weight vs pressure study results are shown in Figure 75. The dry weight vs pressure trend shows that the pressure for minimum weight is below 3000 psi. The pressure for minimum weight, filled with MIL-H-5606 fluid is 5000 psi, and 7000 psi filled with CTFE fluid. Figure 76 summarizes the characteristics and requirements and results.

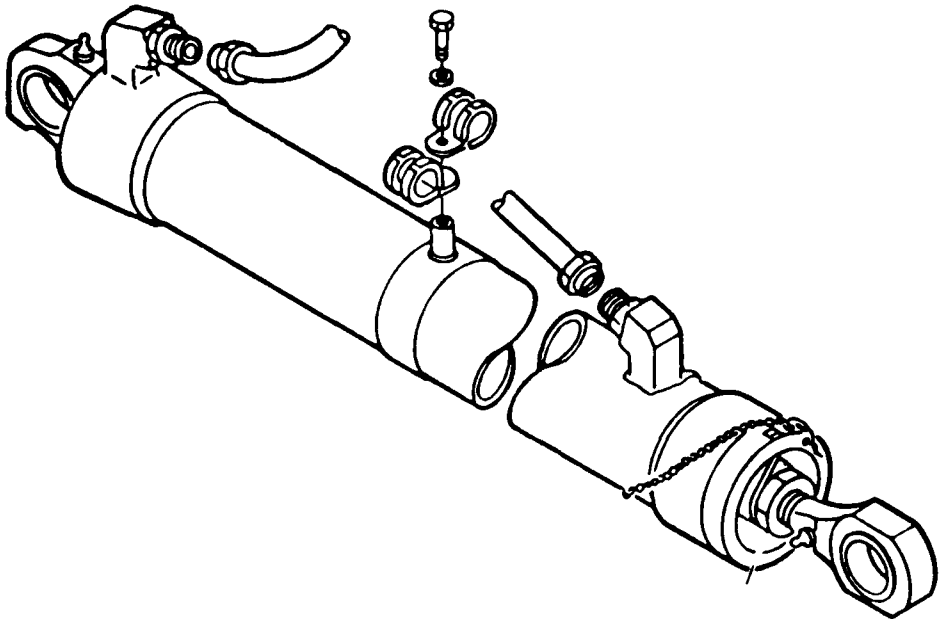

GP23-0550-31

Figure 74.

MAIN GEAR DOOR CYLINDER

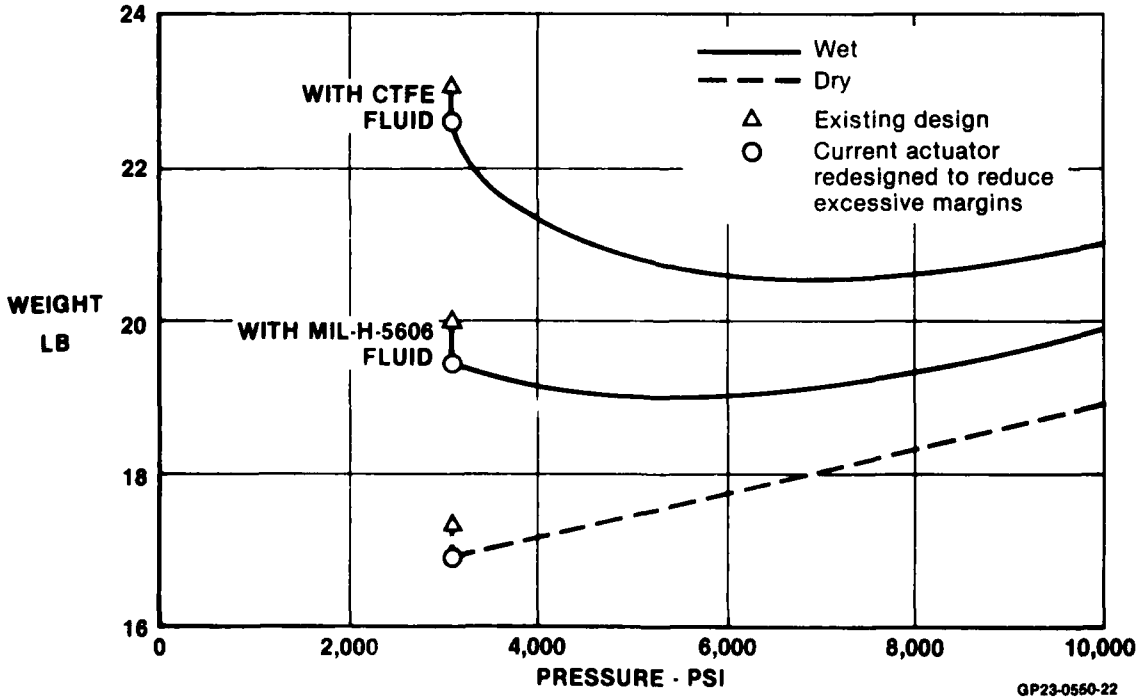

Figure 75.

MAIN GEAR DOOR ACTUATOR

Weight vs Pressure

CHARACTERISTICS AND REQUIREMENTS

- SIMPLE ACTUATOR
- EXTEND, RETRACT, EXTEND EACH CYCLE
- PRESSURE TO BOTH ENDS OF PISTON DURING EXTENSION
- FAIL SAFE
  - NO PRESSURE TO ROD END DURING EXTENSION

RESULTS

- BARREL BORE GREATER THAN REQUIRED AT 10,000 PSI TO PROVIDE RADIAL SPACE FOR SEALS
- BARREL LENGTHENED AT 8,000 PSI AND 10,000 PSI TO PROVIDE ROOM FOR SEAL GLANDS
- DRY ACTUATOR WEIGHT INCREASES WITH PRESSURE
- MINIMUM WET ACTUATOR WEIGHT
  - 5,000 PSI FOR MIL-H-5606
    - 5% REDUCTION
  - 7,000 PSI FOR CTFE
    - 2.5% INCREASE
- FLUID WEIGHT SIGNIFICANT

GP23-0550-23

Figure 76.

MAIN GEAR DOOR ACTUATOR STUDY FINDINGS

c) Spoiler Actuator - The spoiler actuator cross section and a schematic are shown in Figure 77. The unit is a single system actuator which incorporates a manual control valve, anti-cavitation valve, hydraulic filter, hold down check valve, and thermal relief valve. The results of the weight vs system pressure trend study are given in Figure 78. The dry minimum weight-pressure is approximately 5000 psi. The minimum weights for the filled actuators are: MIL-H-5606, 5500 psi; CTFE, 6000 psi. The characteristics and requirements and the results are documented in Figure 79.

A preliminary study was made to determine the effect of distribution systems weight savings concepts. This study was run on the KC-10A System Number 3 at 8000 psi with A08 fluid, see Figure 93. The results show that approximately 20% additional weight savings could be realized using the concepts of odd/even (press re/return) lines, non-linear valves and asymmetric pressure drop distribution systems.

DISTRIBUTION SYSTEM	HARDWARE WT (LB)	% WEIGHT SAVED
THICK WALL, CONVENTIONAL DISTRIBUTION SYSTEM	123.2	—
ODD/EVEN	105.5	14.4
ODD/EVEN WITH NONLINEAR VALVE	101.8	3.0
ODD/EVEN, NONLINEAR VALVE, ASYMMETRIC DISTRIBUTION SYSTEM	98.0	3.1
TOTAL SAVED	25.0	20.5

GP23-0550-223

Figure 93.

DISTRIBUTION SYSTEM WEIGHT SAVINGS vs CONFIGURATION SUMMARY

KC-10A System 8,000 PSI CTFE A08 Fluid

Figures 94 and 95 show the distribution system weight summary for the F-15 and the KC-10A respectively. As may be noted, the distribution system weight is still decreasing as the pressure is increased to 10,000 psi.

	3,000 PSI		5,500 PSI	8,000 PSI	10,000 PSI
	5606 - LB	CTFE - LB	CTFE - LB	CTFE - LB	CTFE - LB
DISTRIBUTION SYSTEM	220	220	201	157	136

GP23-0550-224

Figure 94.

F-15 DISTRIBUTION SYSTEM WEIGHT SUMMARY

SYSTEM PRESSURE	*DESIGN FACTOR*
3,000	4.0
5,500	3.5
8,000	3.0
10,000	2.6

ALL TITANIUM DISTRIBUTION SYSTEM

GP23-0550-222

Figure 91.

DISTRIBUTION SYSTEM DESIGN CRITERIA

AIRCRAFT		SIMULATED	
BREAKDOWN	DRY WEIGHT (LB)	SYSTEM NO. 3 BREAKDOWN	DRY WEIGHT (LB)
PIPING	1,372	CENTRAL	227.1
HOSES	262	STABILIZER	5.8
CLAMPS	74	RIGHT WING	7.4
		LEFT WING	4.6
TOTALS	1,708		244.9

GP23-0550-242

Simulated distribution system is 14.27% of the entire distribution system

Figure 92.

SIMULATED vs TOTAL DRY WEIGHT SUMMARY

3,000 PSI Operating Pressure KC-10A Distribution System

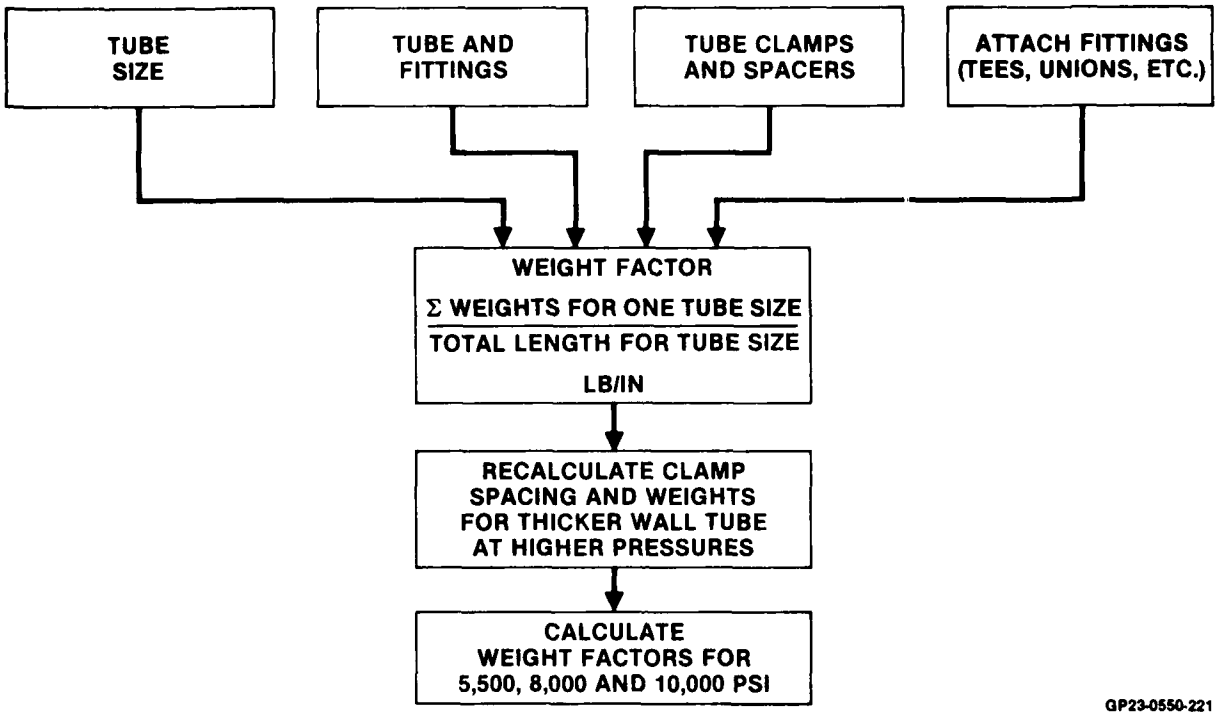

Figure 90.
DISTRIBUTION SYSTEM DRY WEIGHT FACTORS

The distribution system design factors, Figure 91, were derived using the established factors as a guide. The existing 3000 psi system design factor is 4.0. The Navy's LHS 8000 psi factor was established as 3.0. The 5500 and 10,000 psi factors were interpolated and extrapolated from the two established values.

Each of the selected hydraulic systems were resized at 5500, 8000 and 10,000 psi using A08 fluid. Since the analyzed systems weights represent only a portion of the total distribution systems weight, the weight of the total distribution system was projected by percentage. The percentage was derived by taking the ratio of the weight of the distribution systems analyzed to the total distribution systems weight at 3000 psi. At higher pressures, the total distribution system weight was calculated using this ratio. Figure 92, shows the percentage calculation for the KC-10A.

- **LINE SIZING**
  - NO FLUID VELOCITY LIMITATIONS
  - PRESSURE DROP BALANCE - VARIABLE
- **ACTUATOR VALVES SIZED AT THE NO-LOAD ACTUATOR FLOWRATES**

OPERATING PRESSURE	ΔP ACROSS VALVE
5,500	1,600
8,000	2,500
10,000	3,000

- **NO-LOAD ACTUATOR FLOWRATES DETERMINED FROM RATIO OF OPERATING SYSTEM PRESSURES TIMES 3,000 PSI NO-LOAD RATES**
- **ACTUATOR STROKE, ROD DIAMETER AND LOAD IDENTICAL FOR ALL PRESSURES**
- **ACTUATOR AREAS SIZED TO PRODUCE THE SAME FORCE OUTPUT AS 3,000 PSI ACTUATOR**
- **TUBE WALL THICKNESS CALCULATION**

$$ID = OD\left(\frac{S-P}{S+P}\right)^{1/2}$$

S = ULTIMATE TENSILE STRENGTH = 125 KSI FOR 3AL-2.5V TITANIUM
= 48 KSI FOR TITANIUM COILED TUBES

WALL THICKNESS TOLERANCE $^{+10\%}_{-5\%}$, ∴ TOLERANCE INCREASED BY 5% TO ALLOW FOR MINIMUM WALL THICKNESS

GP23-0550-241

Figure 89.
HIGH PRESSURE DESIGN CRITERIA

The technique for establishing hydraulic installation weight factors is shown in Figure 90. The hydraulic installation is comprised of the tube, tube end fittings, tube clamps, the attaching fittings (tee, union, etc.). Weight factors were derived by taking a particular size tube, summing the weights of all the hydraulic installation parameters for that size tube, and dividing by the total length of tubing to give a weight factor (lb per in.). Baseline weight factors were established for the titanium tubing, aluminum tubing and titanium coiled tubing with MIL-H-5606 hydraulic fluid and a 3000 psi supply pressure system. Coiled tubing weight factors are divided into two parts. The installed weight factor is the summation of the tube, fluid and end fitting weight divided by the length of the tube. The clamp block installation factor was derived by calculating the total clamp block installation weight for each coiled tube size and dividing by the total number of coiled tube installations. This gives a weight for each coiled tube installation.

- COLLECT TUBING AND INSTALLATION DATA FOR ALL THE F-15 AND KC-10A HYDRAULIC SYSTEMS AND SUBSYSTEMS
- COMPUTER MODEL EACH AIRCRAFT HYDRAULIC SYSTEM AND SUBSYSTEM USING THE SSFAN COMPUTER PROGRAM. CORRELATE THE PERFORMANCE AT 3,000 PSI WITH EXISTING DATA
- CALCULATE NEW TUBING WALL THICKNESSES FOR PRESSURES OF 5,500, 8,000 AND 10,000 PSI
- DEVELOP INSTALLATION WEIGHT FACTORS (LB/IN) FOR EACH TUBING SIZE AT 3,000, 5,500, 8,000 AND 10,000 PSI
- RESIZE SELECTED SYBSYSTEMS AT EACH HIGHER PRESSURE USING A08 FLUID AND PROJECT THE WEIGHT OF THE TOTAL DISTRIBUTION SYSTEM FOR EACH AIRCRAFT

GP23-0550-220

Figure 86.

DISTRIBUTION SYSTEM SIZING

- ASSUME 1/2 LOAD FLOWS FOR EACH FLIGHT CONTROL ACTUATOR (INBOARD AILERON, SPOILER, INBOARD ELEVATOR)
- RUN CENTRAL SYSTEM WITH THESE 1/2 LOAD FLOWS THEN RUN SUBSYSTEMS WITH APPROPRIATE PRESSURES
- ON SUBSYSTEMS (LEFT AND RIGHT WING, AND STABILIZER) USE 1/2 OF ACTUAL OUTPUT LOADS PER SYSTEM AT 3,000 PSI
- PRESSURE DISTRIBUTION SHOULD BE ROUGHLY 2/3 OF AVAILABLE PRESSURE ACROSS ACTUATOR AND VALVES AND THE REMAINDER TO BE EVENLY DISTRIBUTED BETWEEN PRESSURE AND RETURN
- CTFE FLUID WITH VI IMPROVER (A08)
- FLUID TEMPERATURE THROUGHOUT SYSTEM ≈ 150°F FOR INITIAL SIZING

GP23-0550-239

Figure 87.

KC-10A CTFE HIGH PRESSURE HYDRAULIC SYSTEM SIZING GROUND RULES

POWER CONTROL SYSTEMS

- APPROXIMATE 1/3 - 1/3 - 1/3 PRESSURE DISTRIBUTION AT NO-LOAD FLOW DEMANDS
- ACTUATORS SIZED TO HANDLE SAME STALL LOADS AS 3,000 PSI MIL-H-5606 SYSTEM
- SAME NO-LOAD SURFACE RATES AS 3,000 PSI MIL-H-5606 SYSTEM
- IDENTICAL TEMPERATURE DISTRIBUTION AS 3,000 PSI MIL-H-5606 SYSTEM
- SAME TUBE LENGTHS AND ROUTING (BENDS, ELBOWS) AS BASELINE SYSTEM

UTILITY SYSTEM

- ACTUATORS/MOTORS SIZED TO MEET SAME STALL LOAD/TORQUE AS BASELINE SYSTEM
- TUBES AND RESTRICTORS SIZED TO MEET LOW TEMPERATURE OPERATING TIMES
- SAME TEMPERATURE DISTRIBUTION AS BASELINE SYSTEM
- SAME TUBE LENGTHS AND ROUTING (BENDS, ELBOWS) AS BASELINE SYSTEM

GP23-0550-238

Figure 88.

F-15 CTFE HIGH PRESSURE HYDRAULIC SYSTEM SIZING GROUND RULES

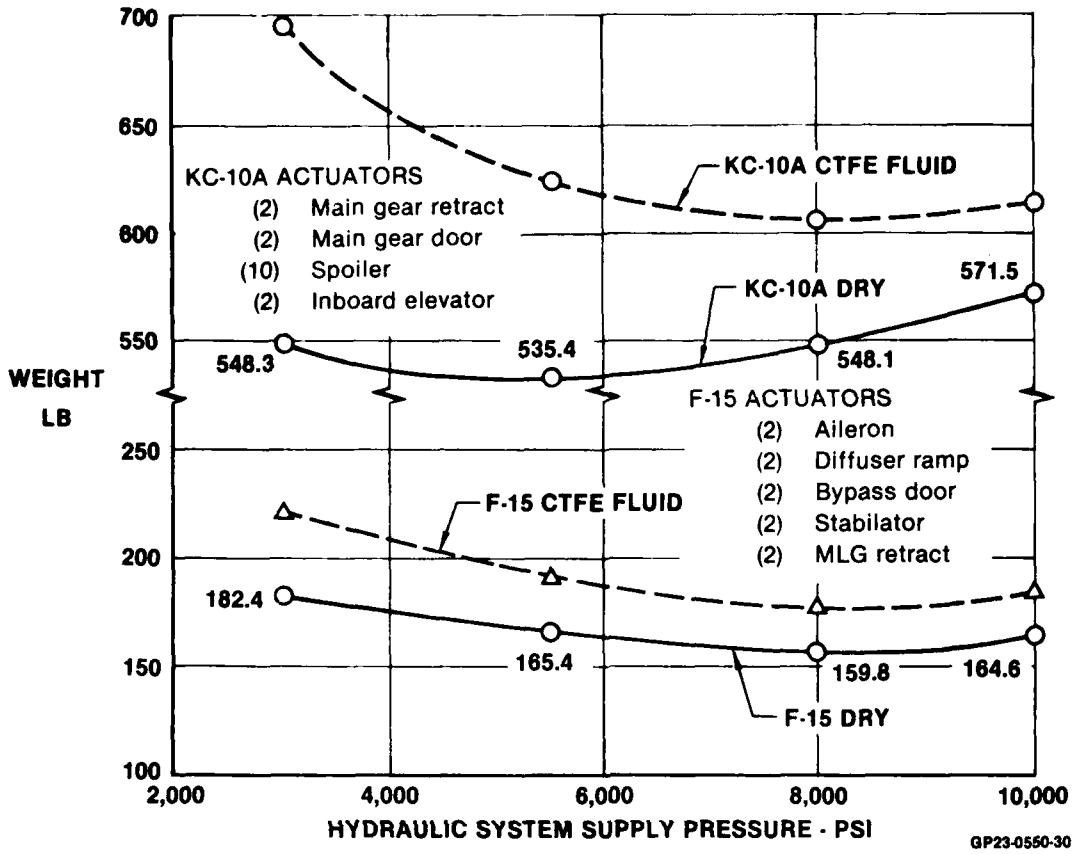

Figure 85.

Σ ACTUATOR WEIGHTS vs HYDRAULIC SYSTEM PRESSURE

2.3.2.3 Distribution System Selection, Detail Design Results - The approach to sizing the distribution systems is shown in Figure 86. Data was collected for both aircraft. The data included schematics of all subsystems plus the actual line sizes, lengths and weights for tubing and hoses as well as weights for fittings and clamps. The F-15 PC1 and PC2 and the KC-10A System Number 3 distribution systems were modeled using the SSFAN computer program. Correlation was first established at 3000 psi between the computer model and existing iron bird test data. Weights were established for the total aircraft systems at 3000 psi. Ground rules were established for resizing the distribution systems for each aircraft, see Figures 87 and 88. Criteria for sizing valves, lines and actuators is shown in Figure 89. Tubing wall thicknesses were calculated for pressures of 5500, 8000 and 10,000 psi.

VARIABLES THAT AFFECT DESIGN

- **INSTALLATION GEOMETRY**
- **HINGE MOMENT vs SURFACE RATE REQUIREMENTS**
- **STIFFNESS REQUIREMENTS**
- **DESIGN FACTORS**
  - LIMIT TO BURST
  - LIMIT TO ULTIMATE
  - CALCULATED AIRLOADS, FEDERAL AIRWORTHINESS REGULATION (FAR) 25
- **MATERIALS**
- **FUTURE TRENDS/NEW TECHNIQUES**
  - WING LOAD ALLEVIATION
  - DIRECT VALVE DRIVERS
  - WATERHAMMER ATTENUATORS
  - PRESSURE INTENSIFIERS
  - LOAD ASSISTING ACTUATOR DESIGN
  - INTEGRATED ACTUATOR PACKAGES

GP23-0550-29

Figure 84.

DESIGN VARIABLES

All of the F-15 and KC-10A actuators evaluated were lumped into ship sets and weighed out vs pressure to see what the system pressure for lowest weight would be. The results are shown in Figure 85. For dry weight the KC-10A actuators minimum weight is at 5500 psi vs 8000 psi for the F-15 actuators. With the actuators filled with CTFE fluid, the pressure for minimum weight is approximately 8000 psi.

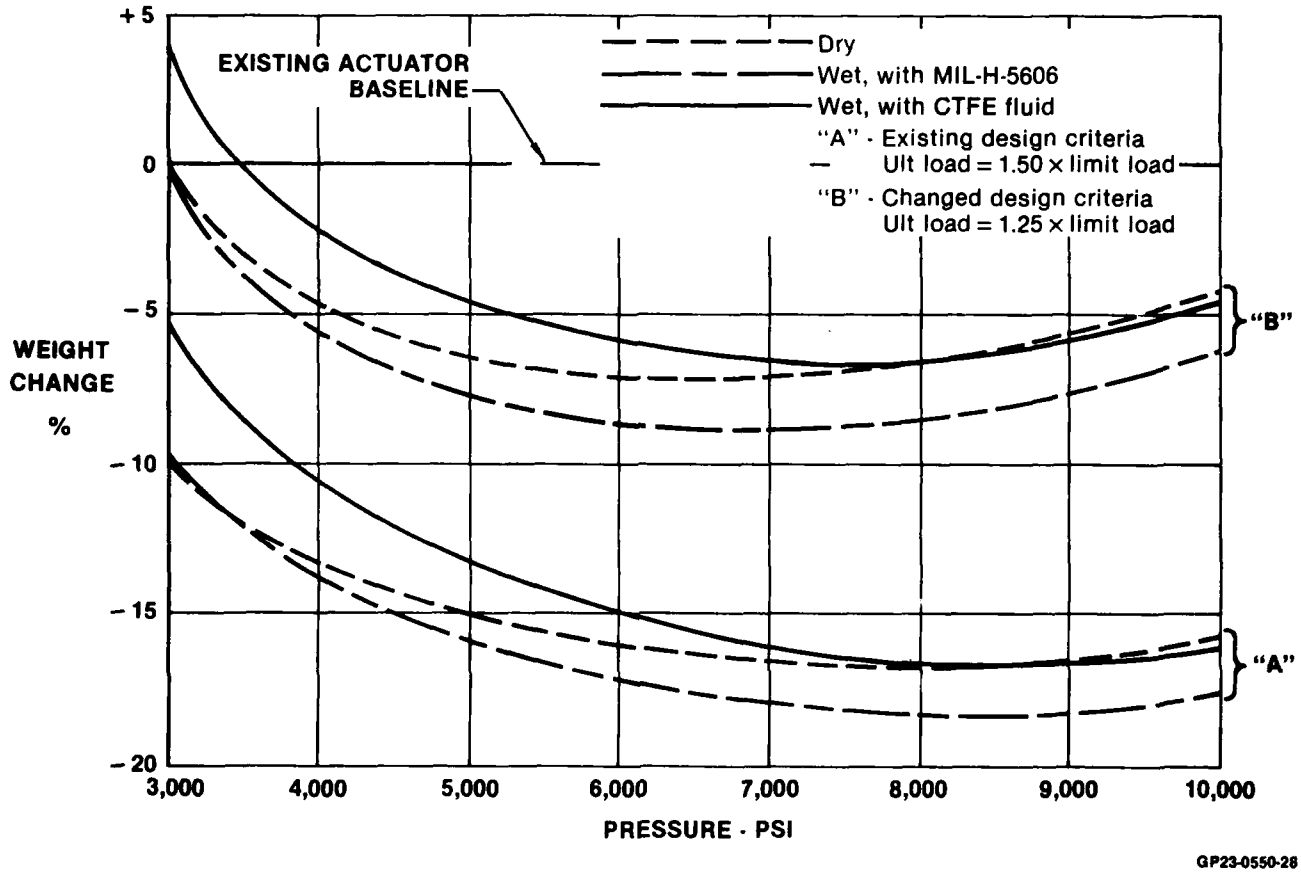

Figure 83.

INBOARD ELEVATOR ACTUATOR ASSEMBLY WEIGHT CHANGE

With Aluminum Manifolds

Ult Load = 1.25 x Limit Load

CHARACTERISTCS AND REQUIREMENTS

- **TANDEM ACTUATOR**
- **MANIFOLD MATERIALS**
  - MAIN: ALUMINUM FORGING
  - AUX: ALUMINUM CASTING
- **MAX EXTERNAL LOAD = MAX ACTUATOR OUTPUT**
  - REMOVED FEDERAL AIRWORTHINESS REGULATION (FAR) 25 FACTOR OF 1.25 WHEN CHANGING FROM COMMERCIAL TO MILITARY AIRCRAFT

RESULTS

- **BARREL BORE AT 10,000 PSI LARGER THAN REQUIRED TO PROVIDE ROOM FOR SEALS**
- **TITANIUM CASTING MANIFOLDS HEAVIER THAN ALUMINUM MANIFOLDS PRESENTLY USED**
  - 15% WEIGHT DIFFERENCE AT 3,000 PSI
  - 4% WEIGHT DIFFERENCE AT 10,000 PSI
- **MINIMUM ACTUATOR DRY WEIGHT AT 7,000 PSI**
  - 6.5% REDUCTION
- **MINIMUM WET ACTUATOR WEIGHT**
  - 7,000 PSI FOR MIL-H-5606
    - 8.5% REDUCTION
  - 8,000 PSI FOR CTFE
    - 6.8% REDUCTION

GP23-0560-27

Figure 82.

INBOARD ELEVATOR ACTUATOR STUDY FINDINGS

The weight impact of reducing the ultimate load design factor from 1.5 to 1.25 was evaluated. The weight vs pressure results are presented in Figure 83. There was a significant weight savings, which increased with pressure. At 10,000 psi the weight reduction was 12% (14.7 lb). The design variables which can affect this type actuator are presented in Figure 84.

The results of the weight vs pressure study are presented in Figure 81. The dry weight of the tandem cylinder and the manifolds and valves are shown separately. The weight vs pressure curves for the cylinder and manifolds/valve show opposite trends. The optimum pressure for the manifolds/valve is 3000 psi or below. For the cylinder the optimum pressure is approximately 8000 psi. The integrated dry weight optimum pressure is approximately 6000 psi. The optimum pressure is approximately 7000 psi when filled with CTFE fluid. Figure 82 summarizes the characteristics and requirements and results of the study.

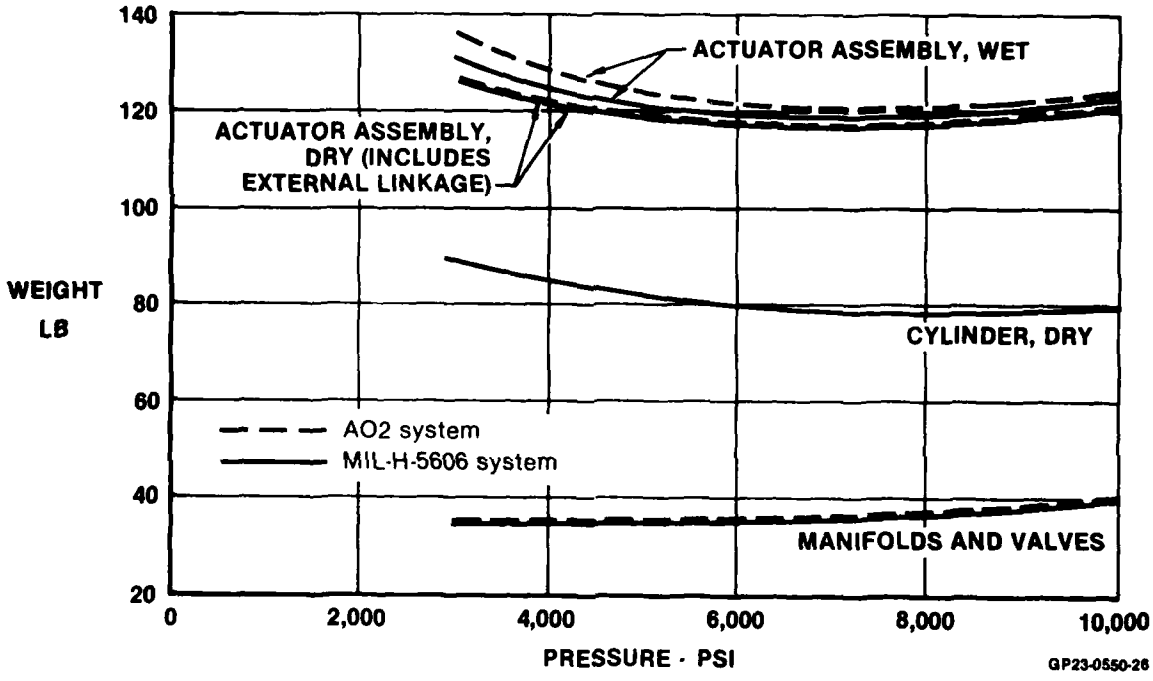

Figure 81.
INBOARD ELEVATOR ACTUATOR
Weight vs Pressure

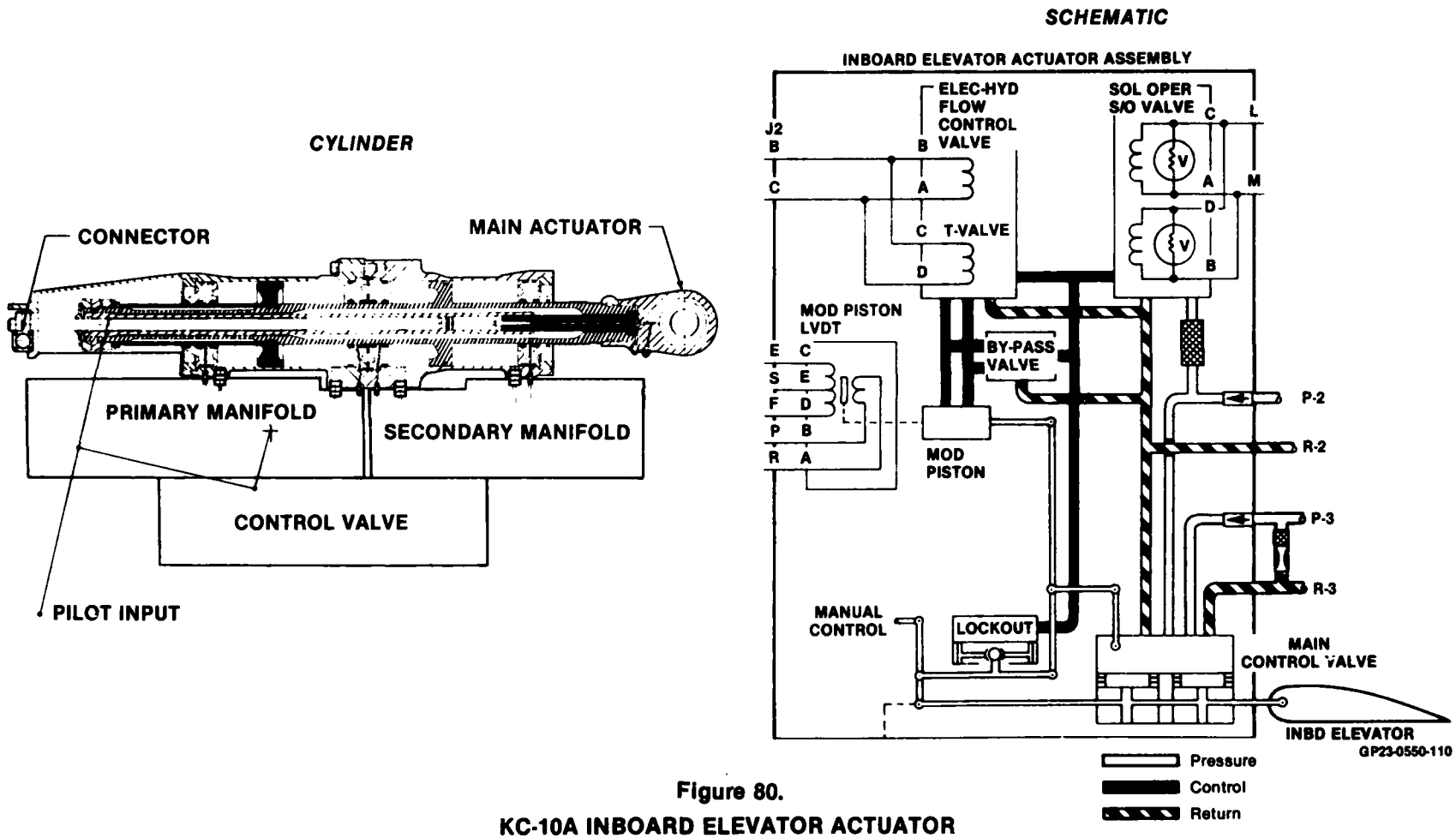

Figure 80.
KC-10A INBOARD ELEVATOR ACTUATOR
Tandem Type

CHARACTERISTICS AND REQUIREMENTS

- **SIMPLE ACTUATOR WITH INTEGRAL CONTROL VALVE, RELIEF AND ANTICAVITATION VALVE**
- **MAX EXTERNAL LOADS IMPOSE HIGHER PRESSURES THAN OPERATING PRESSURE**
  - 76% OVER OPERATING PRESSURE IN TENSION
  - 110% OVER OPERATING PRESSURE IN COMPRESSION
  - ULTIMATE PRESSURES GREATER THAN BURST PRESSURE
  - CANNOT TAKE FULL BENEFIT OF REDUCED BURST PRESSURE FACTORS AT HIGHER OPERATING PRESSURES
- **MAX EXTERNAL LOADS = 1.25 × CALCULATED LOADS (FAR 25)**

RESULTS

- **MANIFOLD WEIGHT ASSUMED CONSTANT**
- **BARREL LENGTHENED AT 8,000 PSI AND 10,000 PSI TO PROVIDE ROOM FOR SEALS**
- **MINIMUM DRY ACTUATOR WEIGHT AT 5,000 PSI**
  - 5% REDUCTION
- **MINIMUM ACTUATOR WEIGHT AT 6,000 PSI**
  - 6% REDUCTION FOR MIL-H-5606
  - 3% REDUCTION FOR CTFE
- **FLUID WEIGHT NOT SIGNIFICANT**

GP23-0550-25

Figure 79.
SPOILER ACTUATOR STUDY FINDINGS

d) Inboard Elevator Actuator - The inboard elevator and all the other flight control surfaces except the spoilers are operated by dual hydraulic system tandem main ram actuators. A fail soft autopilot/CAS system is also integrated into the actuator. A dual tandem manual control valve which is a line removal unit (LRU) completes the manifold. The tandem cylinder cross section and a schematic are shown in Figure 80.

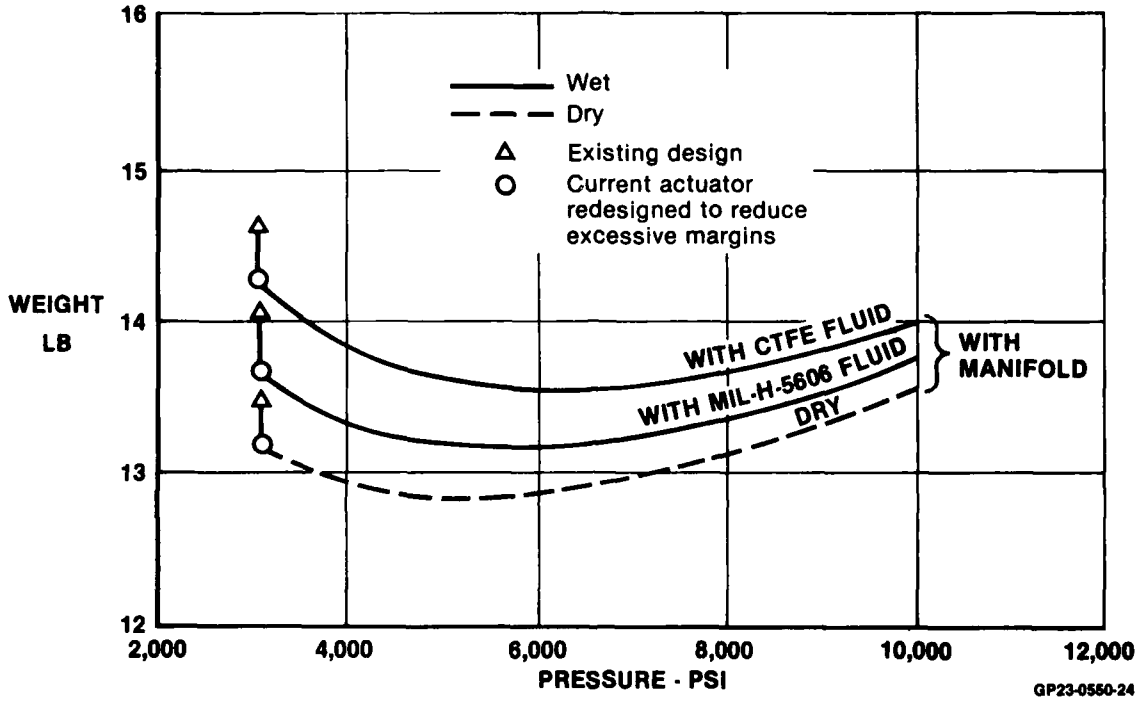

Figure 78.

SPOILER ACTUATOR
Weight vs Pressure

CYLINDER

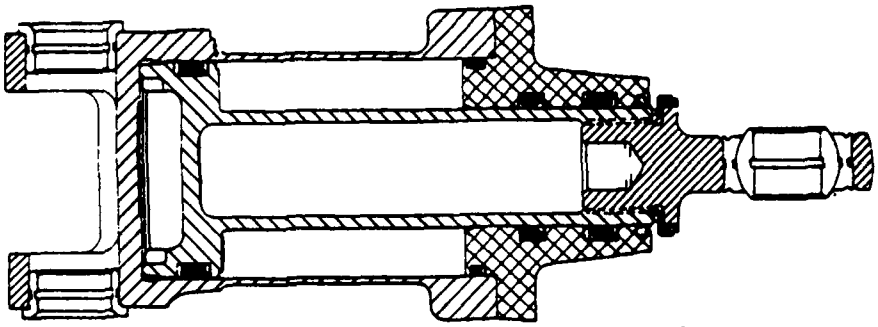

SCHEMATIC

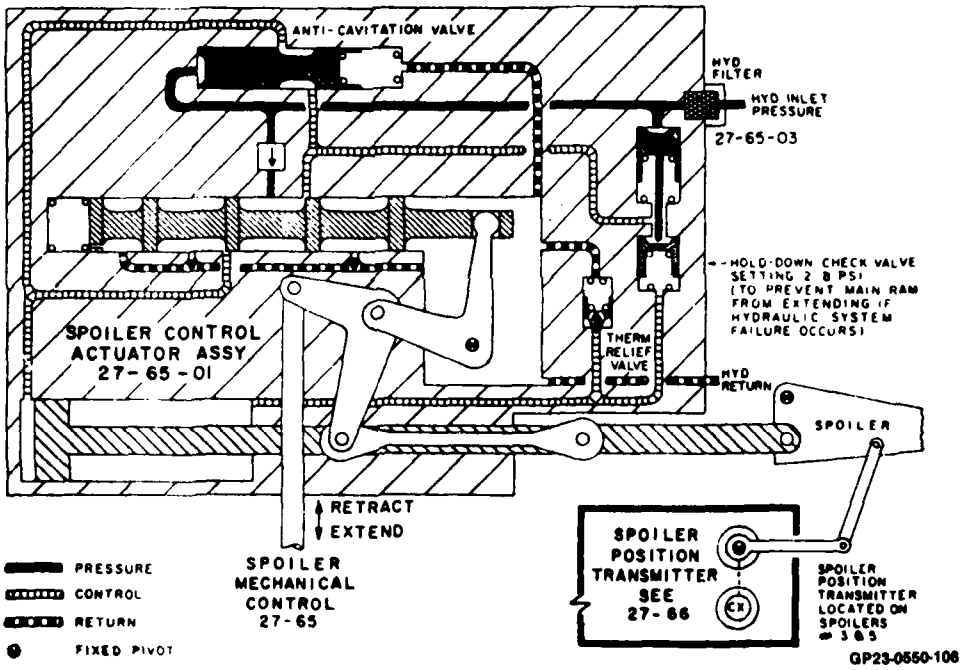

Figure 77.

KC-10A SPOILER ACTUATOR

	3,000 PSI		5,500 PSI	8,000 PSI	10,000 PSI
	5606 - LB	CTFE - LB	CTFE - LB	CTFE - LB	CTFE - LB
DISTRIBUTION SYSTEM	1,288	1,288	909	763	563

GP23-0550-225

Figure 95.
KC-10A DISTRIBUTION SYSTEM WEIGHT SUMMARY

2.3.2.4 Fluid Volume/Weight Control - One of the benefits of a smaller size distribution system is less fluid volume. Minimizing fluid volume is particularly important for CTFE because of CTFE's high specific gravity. Based on the conventional no load flow rate approach of sizing distribution systems to evenly distribute losses among pressure lines, return lines and the valve, the fluid weight versus pressure curve, Figure 96, was derived. The 8000 psi point on the curve compared closely with data from the LHS 8000 psi study. However, using the asymmetric pressure drop and nonlinear valves concepts reduce the fluid weight even more.

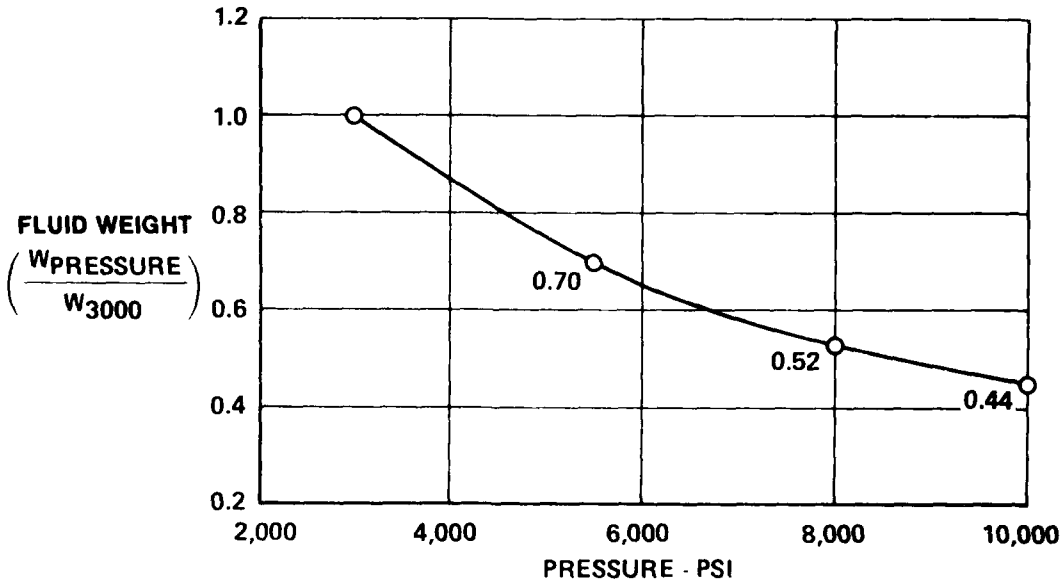

GP23-0550-226

Figure 96.
FLUID WEIGHT vs PRESSURE

In the fluid weight studies for both aircraft, Figures 97 and 98, the 3000 psi baseline systems were initially adjusted to the CTFE fluid weight. The systems were resized at higher pressures and fluid volumes were then calculated using the new line sizes.

	3,000 PSI		5,500 PSI	8,000 PSI	10,000 PSI
	5606 - LB	CTFE - LB	CTFE - LB	CTFE - LB	CTFE - LB
FLUID	163	359	251	187	158

GP23-0550-243

Figure 97.
F-15 FLUID SYSTEM WEIGHT SUMMARY

	3,000 PSI		5,500 PSI	8,000 PSI	10,000 PSI
	5606 - LB	CTFE - LB	CTFE - LB	CTFE - LB	CTFE - LB
FLUID	1,075	2,300	1,610	1,196	1,012

GP23-0550-244

Figure 98.
KC-10A FLUID WEIGHT SUMMARY

2.3.2.5 Miscellaneous Component Weight Control - The miscellaneous component weight trend was estimated based on the work done with the actuator manifold high pressure design. Figure 99 shows the normalized miscellaneous component weight versus system pressure. Figures 100 and 101 show the F-15 and KC-10A miscellaneous component weights respectively.

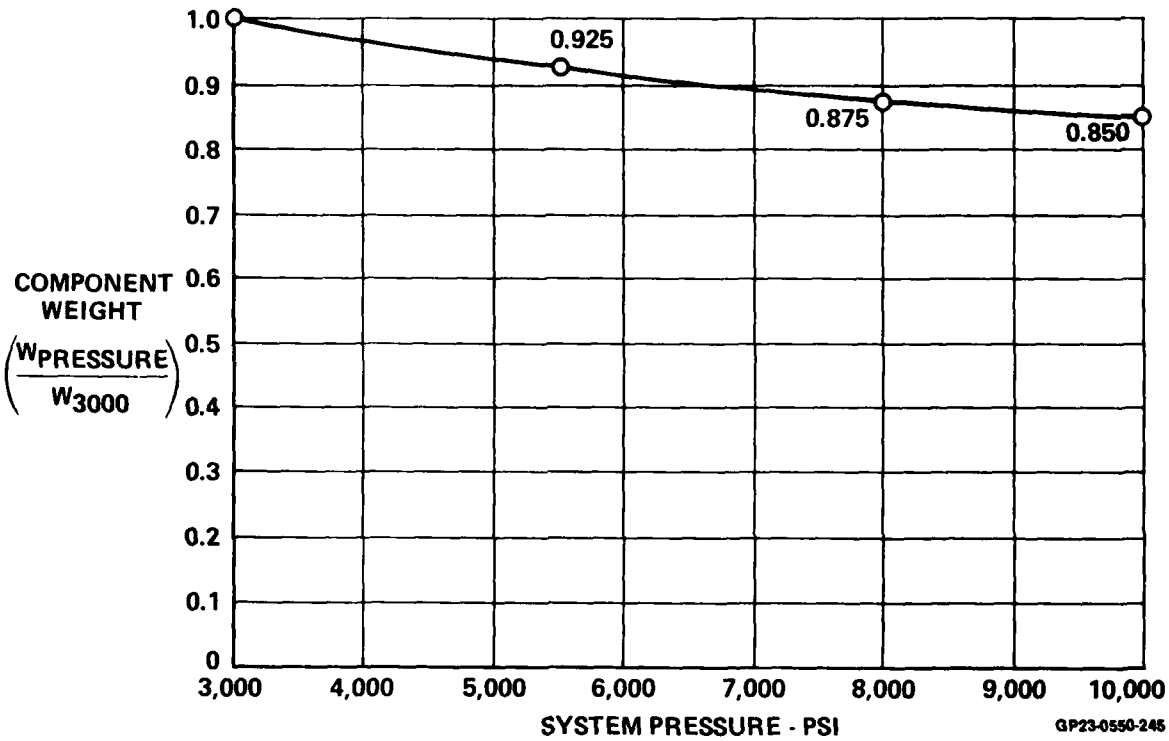

Figure 99.
MISCELLANEOUS COMPONENT WEIGHT vs SYSTEM PRESSURE

	3,000 PSI		5,500 PSI	8,000 PSI	10,000 PSI
	5606 - LB	CTFE - LB	CTFE - LB	CTFE - LB	CTFE - LB
MISCELLANEOUS COMPONENTS	515	515	476	453	438

GP23-0550-247

Figure 100.
F-15 MISCELLANEOUS COMPONENT WEIGHT SUMMARY

	3,000 PSI		5,500 PSI	8,000 PSI	10,000 PSI
	5606 - LB	CTFE - LB	CTFE - LB	CTFE - LB	CTFE - LB
MISCELLANEOUS COMPONENTS	1,707	1,707	1,579	1,502	1,451

GP23-0550-246

Figure 101.
KC-10A MISCELLANEOUS COMPONENT WEIGHT SUMMARY

2.3.2.6 Aircraft Hydraulic System Weight Versus Pressure Trend Results - The total hydraulic system weight summaries are shown in Figures 102 and 103 for the F-15 and KC-10A respectively. It may be noted for both aircraft that the two areas that provide the greatest weight savings are the distribution system and the fluid. For example, to compare the F-15 3000 psi CTFE distribution system weight plus fluid weight to the 8000 psi CTFE weights, a weight savings of 41% is achieved. The KC-10A weight savings for the same conditions is 44%. For actuators and miscellaneous components the weight savings is 12% and 7% for the F-15 and KC-10A respectively.

	3,000 PSI		5,500 PSI	8,000 PSI	10,000 PSI
	5606 - LB	CTFE - LB	CTFE - LB	CTFE - LB	CTFE - LB
FLIGHT CONTROL ACTUATORS	221	221	191	187	194
UTILITY ACTUATORS	207	207	194	190	194
MISCELLANEOUS COMPONENTS	515	515	497	453	438
DISTRIBUTION SYSTEM	220	220	201	157	136
FLUID	163	359	251	187	158
TOTALS	1,326	1,522	1,313	1,174	1,120

GP23-0550-256

Figure 102.
F-15 WEIGHT SUMMARY

	3,000 PSI		5,500 PSI	8,000 PSI	10,000 PSI
	5606 - LB	CTFE - LB	CTFE - LB	CTFE - LB	CTFE - LB
FLIGHT CONTROL ACTUATORS	1,246	1,246	1,200	1,217	1,262
UTILITY ACTUATORS	726	726	699	709	735
MISCELLANEOUS COMPONENTS	1,707	1,707	1,579	1,502	1,451
DISTRIBUTION SYSTEM	1,288	1,288	909	763	563
FLUID	1,075	2,300	1,610	1,196	1,012
TOTALS	6,042	7,267	5,997	5,387	5,023

GP23-0560-249

Figure 103.
KC-10 WEIGHT SUMMARY

Since distribution system size and fluid volume are directly related, and the high percentage of weight savings is in these two parameters, the emphasis for further weight reduction was placed on the distribution system. Concepts which reduce distribution system size are:

1) Asymmetric pressure and return lines

2) Odd/even pressure/return lines

3) Non-linear valve

4) Pressure intensifiers

The hydraulic system weight versus pressure curves, Figures 104 and 105 graphically show the decreasing weight with pressure trends. The F-15 curve, Figure 104, appears to reach the optimum point near 10,000 psi. From 8000 to 10,000 psi, the weight decrease is only 4.5%.

The KC-10A curve, Figure 105, shows a 6.8% weight decrease from 8000 to 10,000 psi, indicating the point of diminishing returns with respect to weight savings may have been reached at 8000 psi.

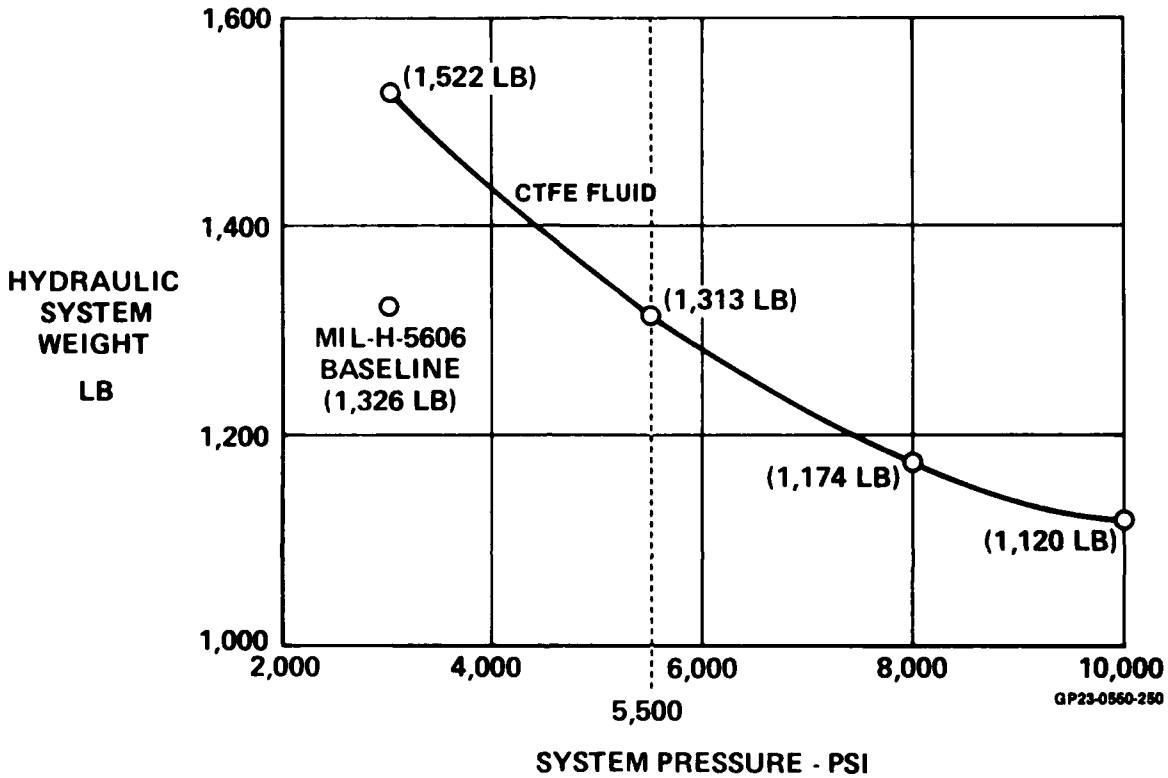

Figure 104.
F-15 HYDRAULIC SYSTEM WEIGHT vs PRESSURE
CTFE Fluid

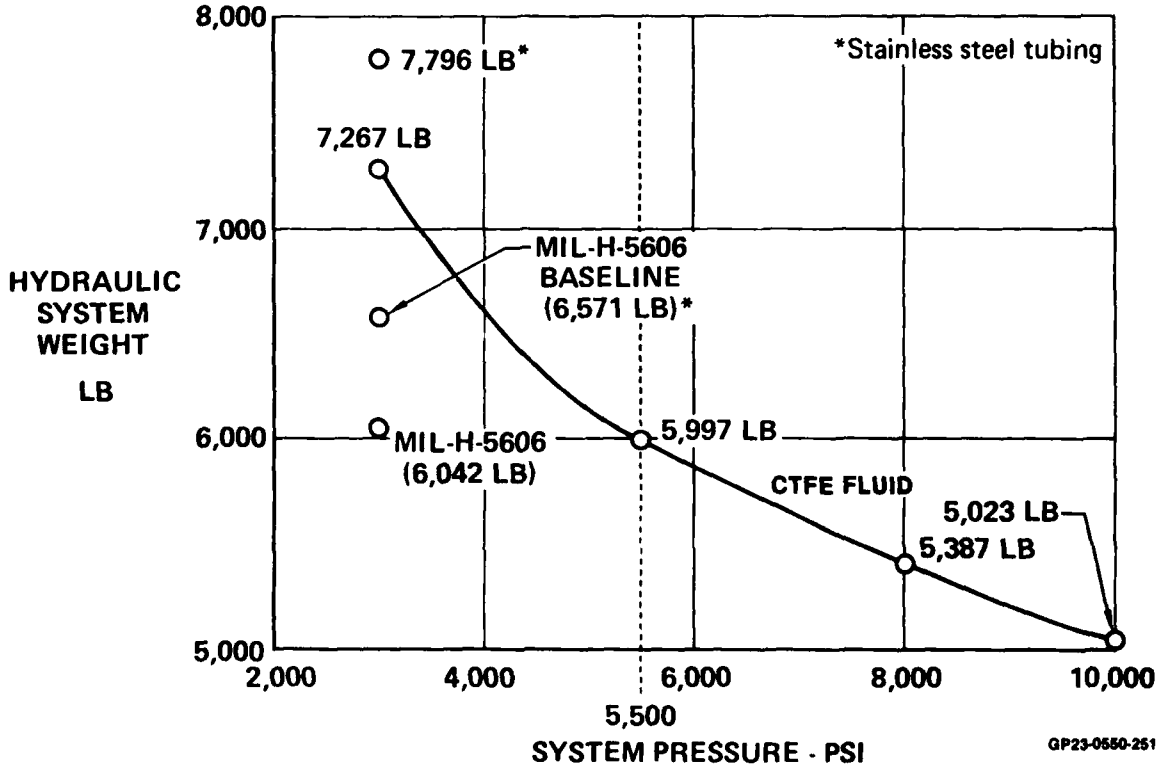

Figure 105.
KC-10A HYDRAULIC SYSTEM WEIGHT vs PRESSURE
CTFE Fluid Titanium Tubing

2.3.2.7 Dynamic Analysis - Water Hammer Control - Flight Control and Utility Functions - The CTFE fluid is 2.2 times as dense as the MIL-H-5606 fluid. However, in an apparent contradiction, the heavier CTFE fluid bulk modulus is lower than the bulk modulus of MIL-H-5606. Both density and bulk modulus define the water hammer transient associated with sudden stoppage of a given fluid. The change in pressure is:

$\Delta P = \rho S \Delta V$ Where:

ΔP is change in pressure

ρ is fluid density

S is the speed of sound in the fluid

ΔV is the reduction in fluid velocity

The detailed analysis showed that the water hammer transient peak increased 1.4 times if MIL-H-5606 is replaced with CTFE fluid.

Selected F-15 and KC-10A systems were analyzed to determine the impact of CTFE fluids on water hammer. In addition, a third system was defined and used to further evaluate CTFE fluids impact on transients. A summary of water hammer pressure transients and its makeup is presented in Figure 106. A comparison of CTFE vs MIL-H-5606 fluid speed of sound characteristics vs fluid temperature and pressure is presented in Figures 107 and 108. There is a significant speed reduction with CTFE fluid. The difference in water hammer rise characteristics is presented in Figures 109 and 110. The increase in rise characteristics with CTFE fluids is quite significant.

- **WATERHAMMER = BASE PRESSURE LEVEL + PRESSURE RISE + REFLECTIONS OF PRESSURE RISE**
- **BASE PRESSURE**
  - DETERMINED BY SUPPLY SYSTEM SIZING AND FLOWS
- **PRESSURE RISE**
  - FLUID PROPERTIES (DENSITY)
  - FLUID VELOCITY (FLOW AND TUBE CROSS SECTIONAL AREA)
- **REFLECTIONS OF PRESSURE RISE**
  - REFLECTION POINTS (LOCATION AND TYPE)
  - FLUID PROPERTIES (SPEED OF SOUND IN FLUID)
  - VALVE CLOSING TIME
  - PRESSURE WAVE SHAPE (VALVE AREA vs TIME RELATIONSHIP)

GP23-0550-73

Figure 106.
MAXIMUM WATER HAMMER PRESSURE

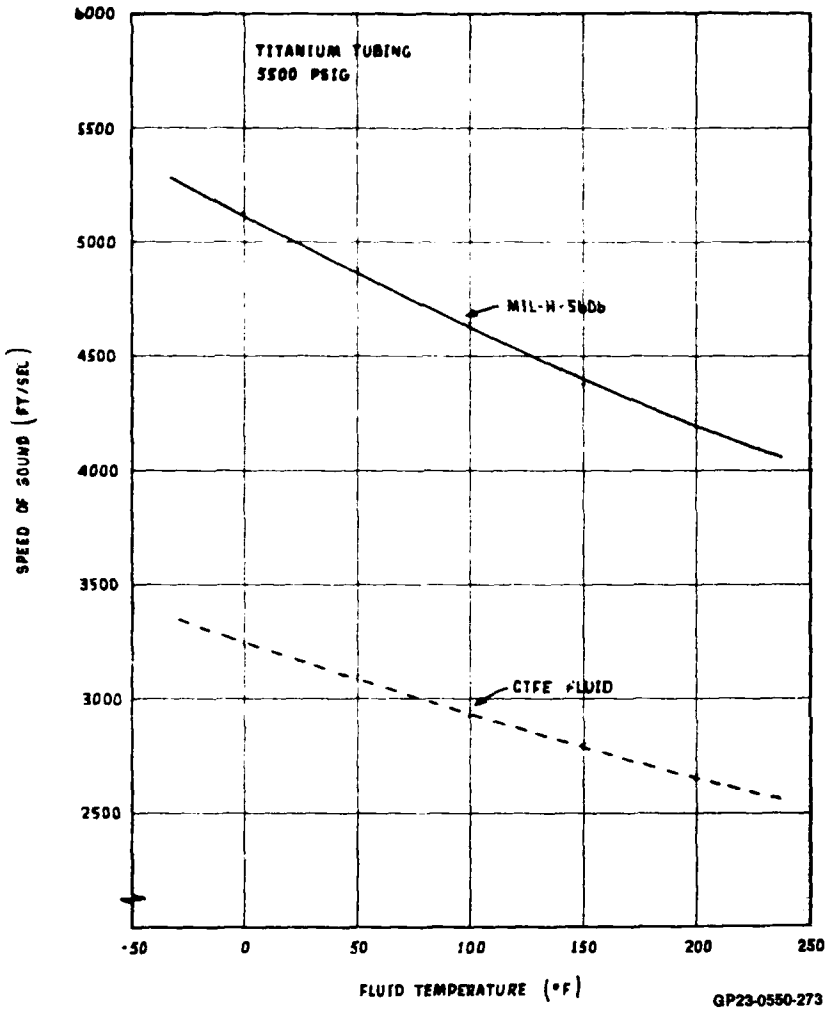

Figure 107.
SPEED OF SOUND IN HYDRAULIC FLUID vs TEMPERATURE AND PRESSURE

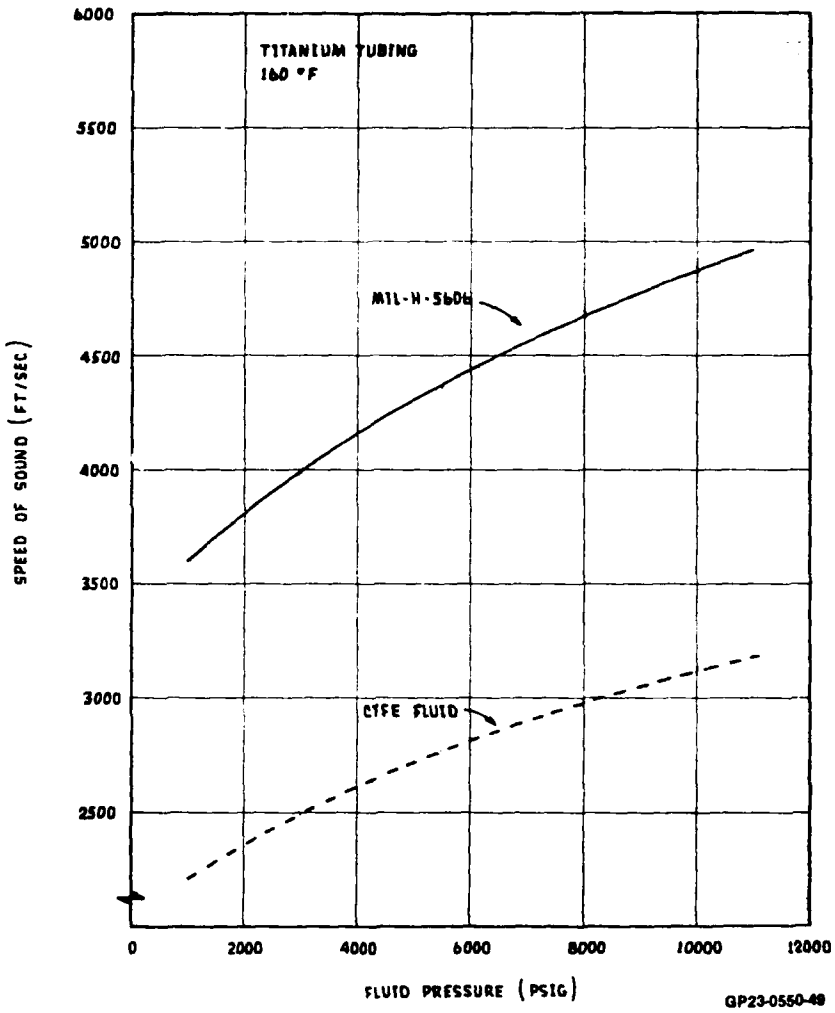

Figure 108.
SPEED OF SOUND IN HYDRAULIC FLUID vs TEMPERATURE AND PRESSURE

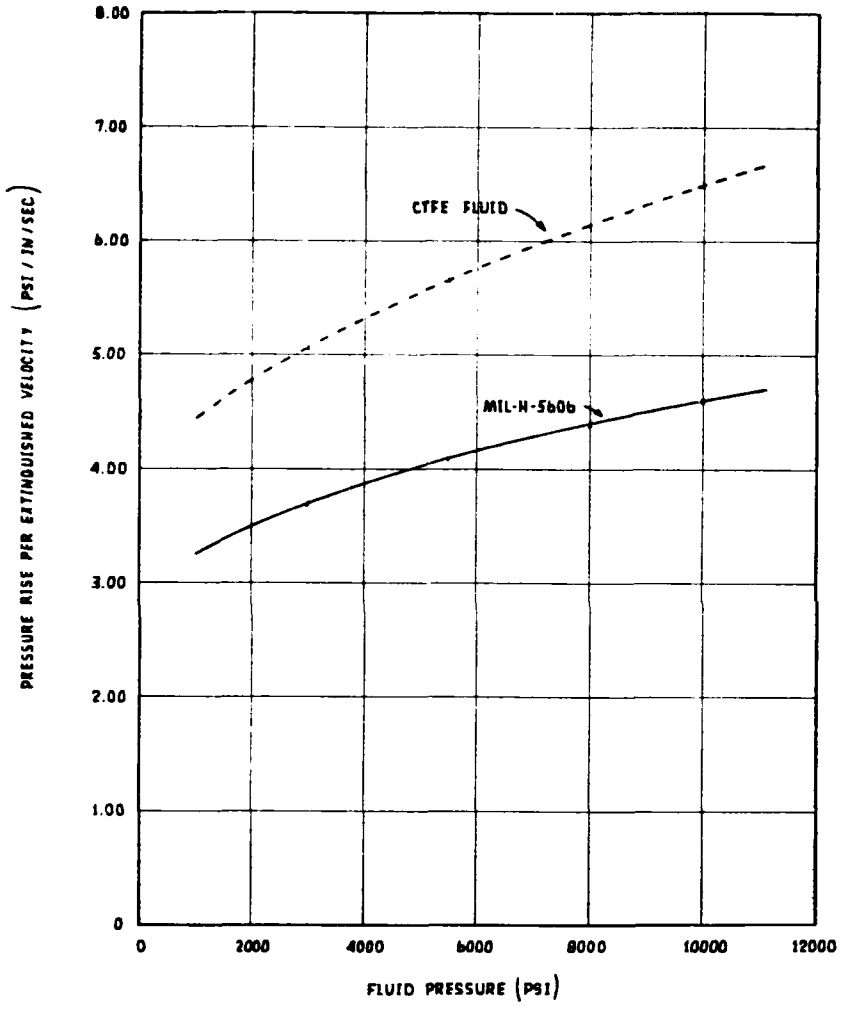

Figure 109.

WATER HAMMER PRESSURE RISE CHARACTERISTICS vs PRESSURE AND TEMPERATURE

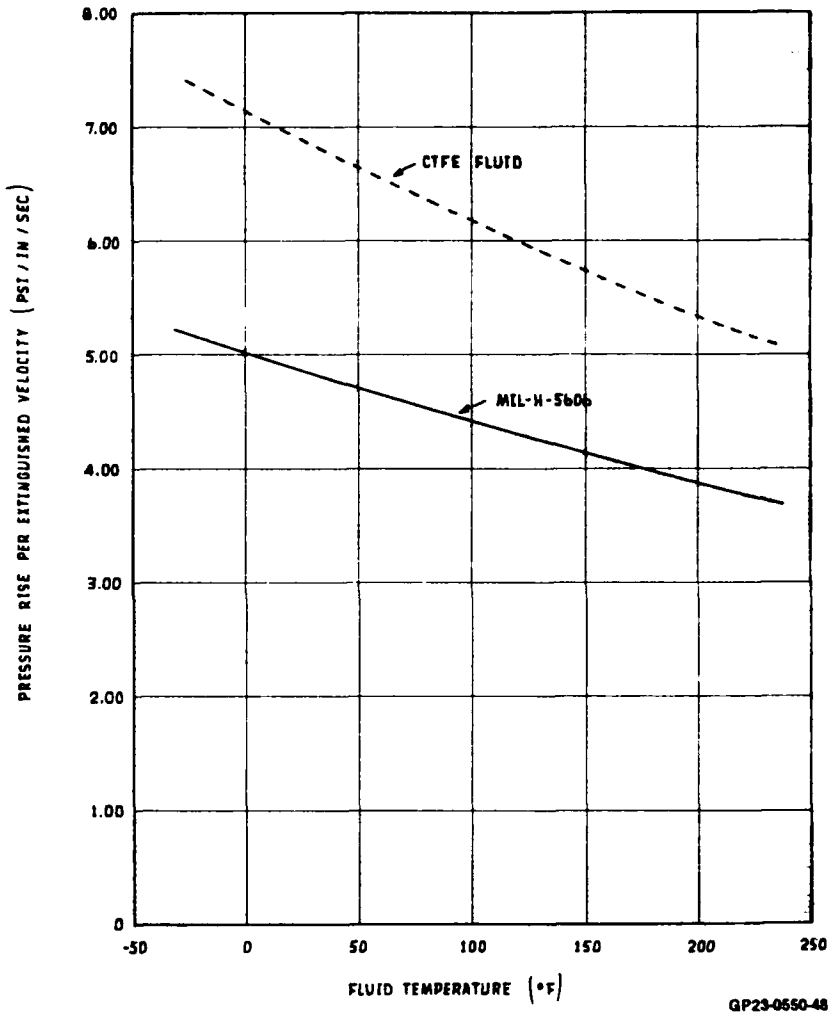

Figure 110.

WATER HAMMER PRESSURE RISE CHARACTERISTICS vs PRESSURE AND TEMPERATURE

The results of the aircraft subsystems analyses and the "academic" system analysis are presented below.

2.3.2.7.1 F-15 - The stabilator and speed brake subsystems were selected for analysis. Figure 111 is a block schematic of the F-15 PC-1 system modeled and analyzed. To keep the model simple the central system (pumps, reservoir, filters, etc.) was replaced with "perfect" source and return simulation. Both linear and non-linear control valves were modeled since the non-linear valve can contribute to reduction in base pressure and water hammer control.

The characteristics of the linear and non-linear valves used are presented in Figure 112. The valve opening characteristics are the same from null to half stroke. Beyond that point the non-linear valve begins to diverge. At full open, the non-linear valve flow area is approximately twice that of the linear valve. The result is at full open, the non-linear valve has one-fourth the pressure drop of the linear valve.

Another system characteristic which can have significant effect on transients is the reflection points in the system. Dead ends (closed valves, etc.) and changes in cross section, branches, and fittings can contribute. Figure 113 presents the energy reflection characteristics of both increases and decreases of cross sections in distribution systems. In addition, the characteristic of the "closing" valve (linear and non-linear) can contribute.

The L/H and R/H stabilator distribution systems have significant differences in their energy reflection characteristics.

All the simulations were conducted with an 8000 psi version of the F-15 PC-1 systems using CTFE A08 fluid. The results from exercising the R/H stabilator actuator are presented in Figures 114, 115, 116, and 117. Figures 114 and 115 present 2 millisecond and 38 millisecond valve reversals respectively.

The reversal is defined as starting with the valve full open in one direction; in one half the valve reversal time, null or full subsystem shutoff is achieved; finally, the other half of the operating time is spent in moving to valve full open in the opposite direction. The valve motion is linear in moving from initial to final position.

Except for the difference in base pressure (which is the reason for non-linear valve usage) the wave shapes and damping of the 2 millisecond and 38 millisecond transients are not too different. This is supported by the data presented in Figures 116 and 117 showing the pressure rise vs time.

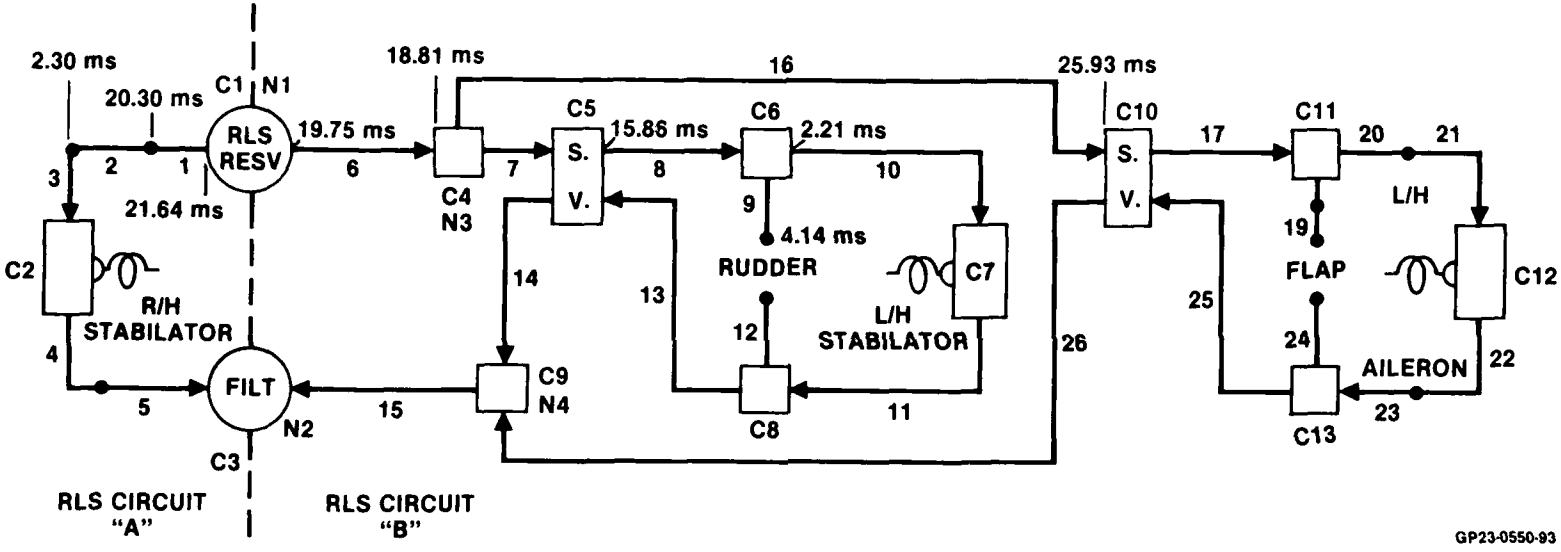

Figure 111.
F-15 PC-1 SUPPLY AND RETURN SYSTEM
CTFE Fluid @ 8,000 PSI Reflection Times Stabilator Circuits

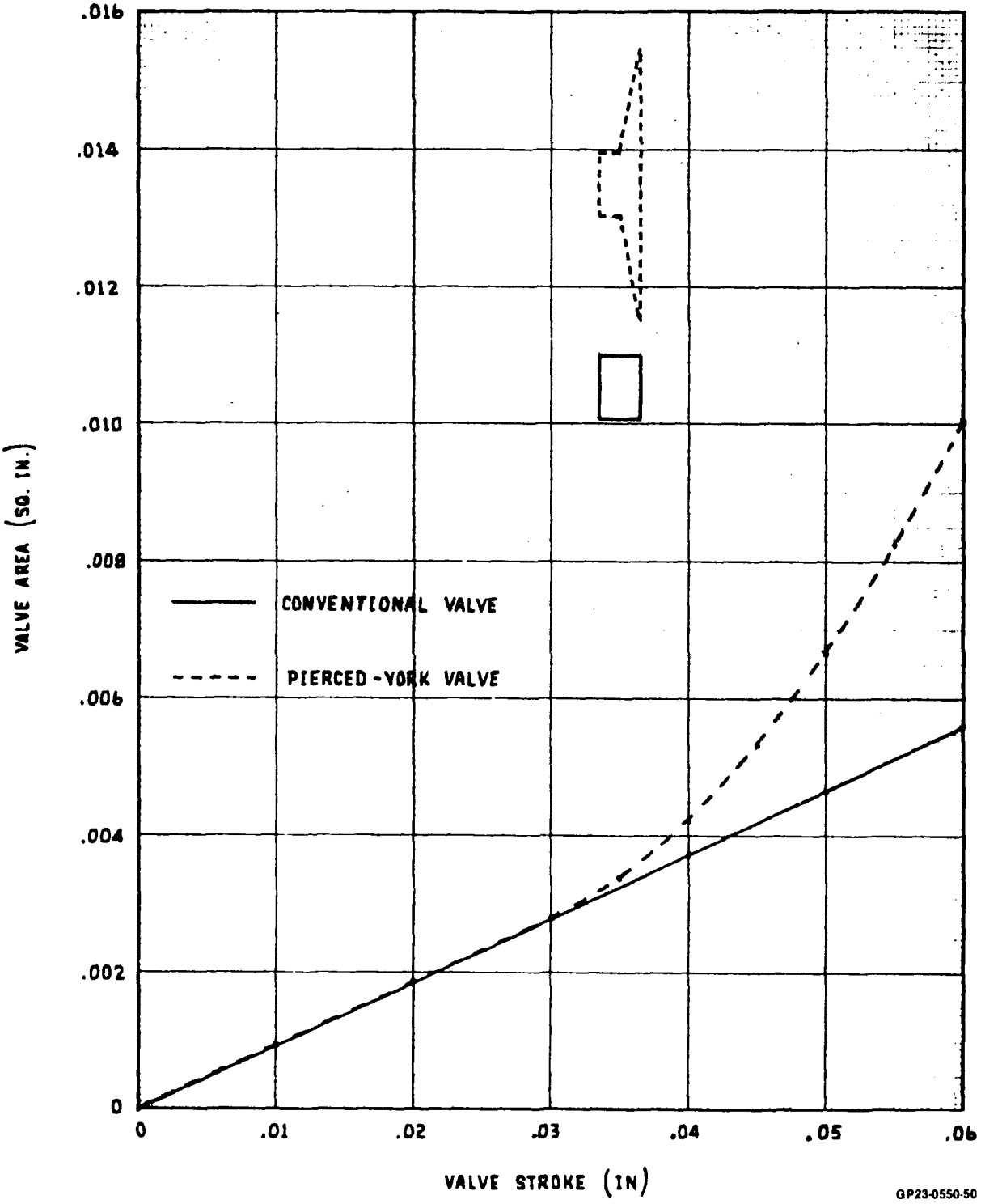

Figure 112.
F-15 R/H STABILATOR ACTUATOR VALVE AREA vs STROKE

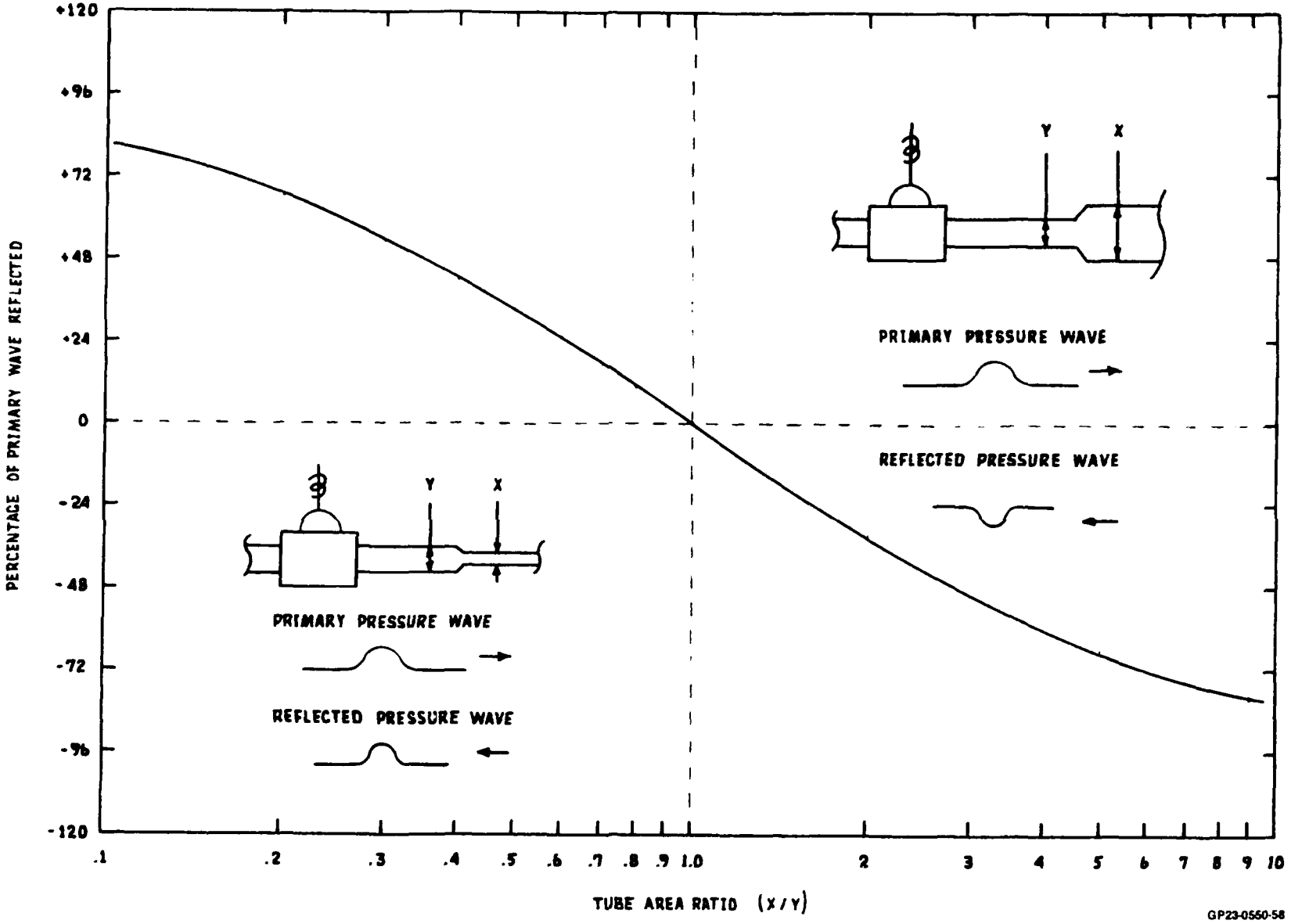

Figure 113.
WATER HAMMER PRESSURE WAVE REFLECTION CHARACTERISTICS

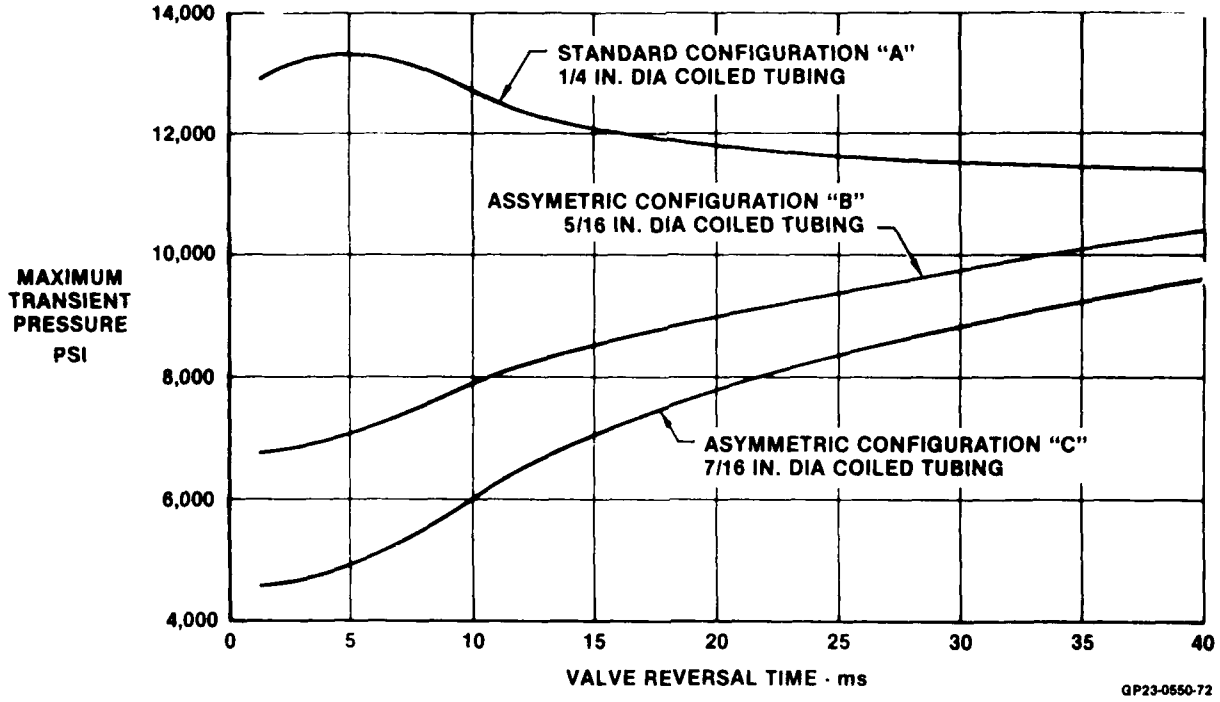

Figure 128.

F-15 PC-1 HYTRAN ANALYSES SUMMARY
R/H Stabilator Actuator Maximum Transient Pressure
8,000 PSI CTFE System

The peak transient then tends to increase as shown in Figure 128. Remember a "perfect" energy source was used in this simulation, so all the wave energy is reflected by the source. In the real world the pump or the central system accumulator will absorb most of the energy and the returning attenuated wave will help to reduce the transient. The benefits of the real world pump system are presented in Section 2.3.2.7.3 on "academic" model results. The analysis of the stabilator performance presents typical flight control system performance.

The F-15 speed brake subsystem was chosen to evaluate performance and transient control in a utility function. This subsystem is a relatively high horsepower system and is controlled by a separate "bang-bang" control valve. Speed of valve operation and valve non-linearities can be used in water hammer control in utility functions.

The F-15 utility central system and speed brake subsystem HYTRAN model was developed and exercised to evaluate water hammer using the CTFE fluid. The HYTRAN block diagram is presented in Figure 129.

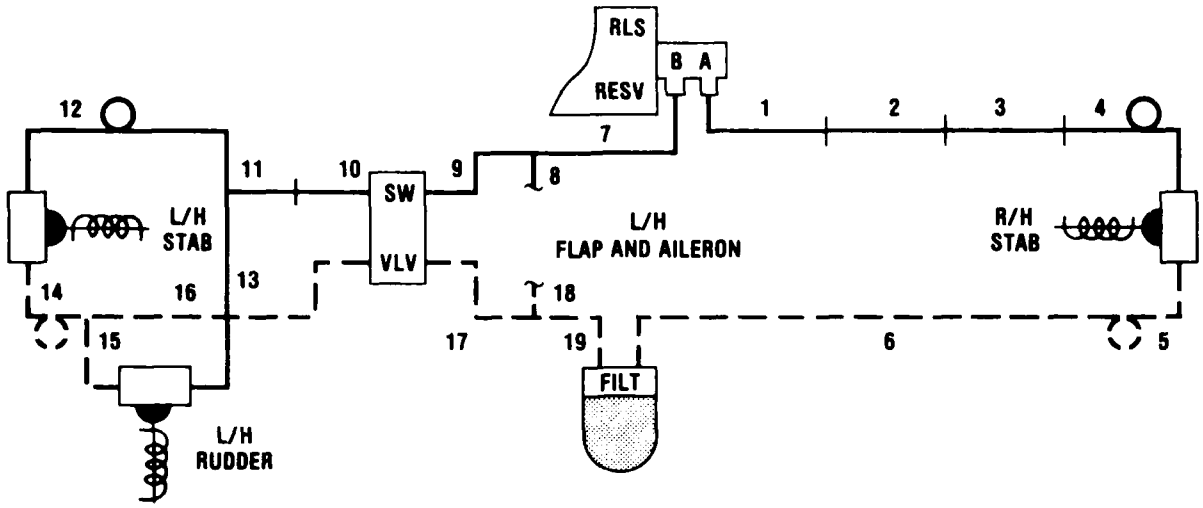

CONFIGURATION DESCRIPTION	R/H STABILATOR DATA (6 ms) @ VALVE INLET			
	CONFIGURATION	INLET BASE PRESSURE (PSI)	PRESSURE RISE (PSI)	TOTAL PRESSURE (PSI)
"A" (2500-2500-2500) - LINEAR VALVE - COILED TUBING 0.250 DIA × 0.053 WALL (0.065 IN.^{2})	"A"	5,374	7,851	13,225
"B" (5700-800-1000) - NONLINEAR VALVE - COILED TUBING 0.3125 DIA × 0.066 WALL (0.102 IN.^{2})	"B"	1,882	5,328	7,210
"C" (5700-800-1000) - NONLINEAR VALVE - COILED TUBING 0.4375 DIA × 0.092 WALL (0.202 IN.^{2})	"C"	2,138	2,956	5,094

GP23-0550-86

Figure 127.

SUMMARY OF F-15 PC-1 STABILATOR CIRCUIT HYTRAN CONFIGURATIONS

The above results led to efforts to refine and optimize "local velocity reduction" techniques. The PC-1 stabilator circuit shown in Figure 127 was used to evaluate three configurations. Configuration "A" consisted of a linear valve and the valve loss was one-third of the pressure drop available at maximum no load rates. The remaining two-thirds of the pressure available was assigned equally to the pressure side and return side lines. Configurations "B" and "C" both used non-linear valves and more line pressure drop is assigned to the pressure side that the return side. For the 7500 psi full flow pressure available in the simulated system, the pressure drops were assigned as follows:

- Pressure lines - 5700 psi
- Valve and manifold - 800 psi
- Return lines - 1000 psi

The result was asymmetric pressure loss and non-linear valves which caused a significant reduction or depression in the base pressure from whence the water hammer transient propagates. For both "B" and "C" configurations the coiled tubing was larger, to determine the effects of local velocity reduction.

The coiled tubing outside diameter (O.D.) for the three configurations is as follows:

"A" ------- 0.2500 O.D.

"B" ------- 0.3125 O.D.

"C" ------- 0.4375 O.D.

The results shown in Figure 128, are interesting. For the "standard conventional approach", configuration "A", the transient peak is in excess of 13,000 psi at around 5 millisecond valve reversals. For these fast operating times, the generated wave front is "trapped" in the coiled tubing which has the highest fluid velocity.

As the valve reversal is slowed down the peak is reduced because increasing portions of the fluid are at lower velocity.

Configurations "B" and "C" present a dramatic contrast in peak magnitude and location. At fast valve reversals, the peak is really a valley and the magnitude is one-half to one-third of that seen in the conventional system. Any increase in coiled tube size (velocity reduction) reduces the transient peak. As the valve reversal rate is slowed, the average velocity tends to increase.

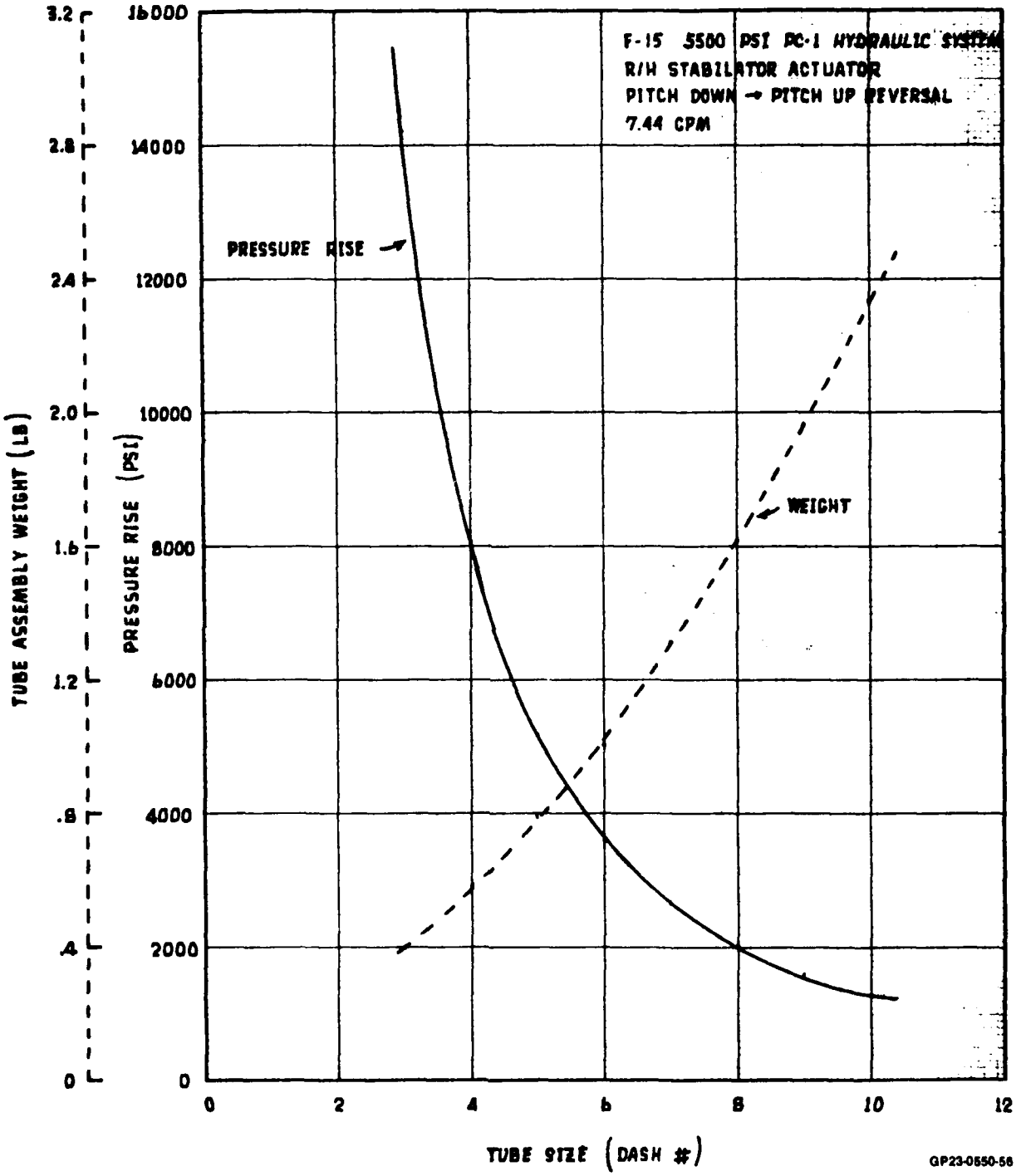

Figure 126.
WATER HAMMER PRESSURE RISE AND COILED TUBE ASSEMBLY WEIGHT vs TUBE SIZE

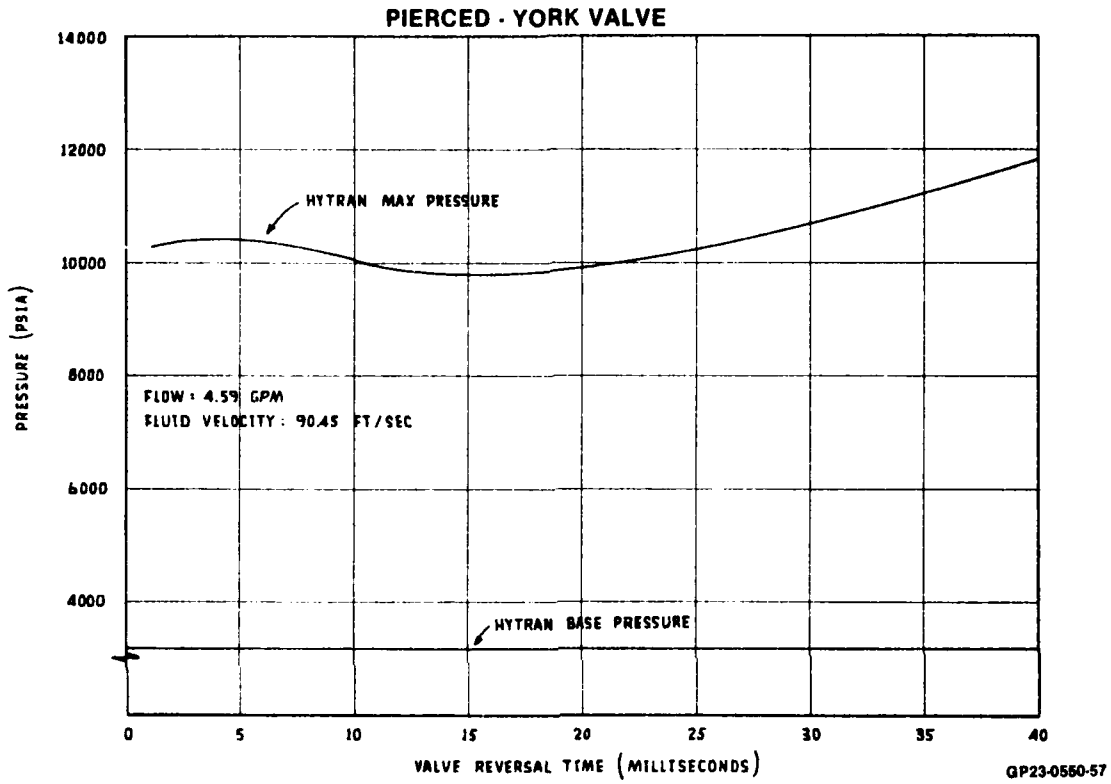

Figure 125.
F-15 L/H STABILATOR ACTUATOR WATER HAMMER CHARACTERISTICS
PC-1 SYSTEM
CTFE Fluid 8,000 PSI No-Load Pitch Reversal

The overriding effect of the line characteristics immediately upstream for fast valve reversals motivated evaluation of using larger diameters. The results of this study are presented in Figure 126. A dramatic reduction in fast valve transient peaks can be accomplished by changing to a size or two larger line. (Increasing from -3 to -6 tube size results in dropping from 15,500 psi to 3500 psi.)

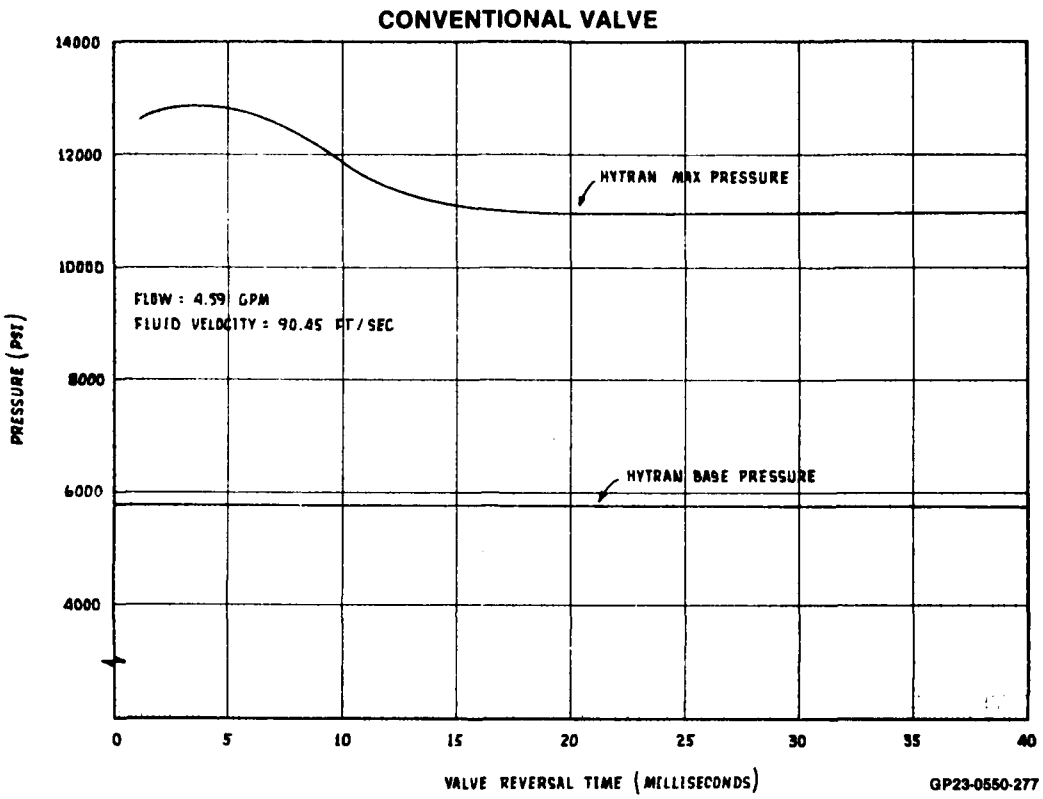

Figure 124.
F-15 L/H STABILATOR ACTUATOR WATER HAMMER CHARACTERISTICS
PC-1 SYSTEM
CTFE Fluid 8,000 PSI No-Load Pitch Reversal

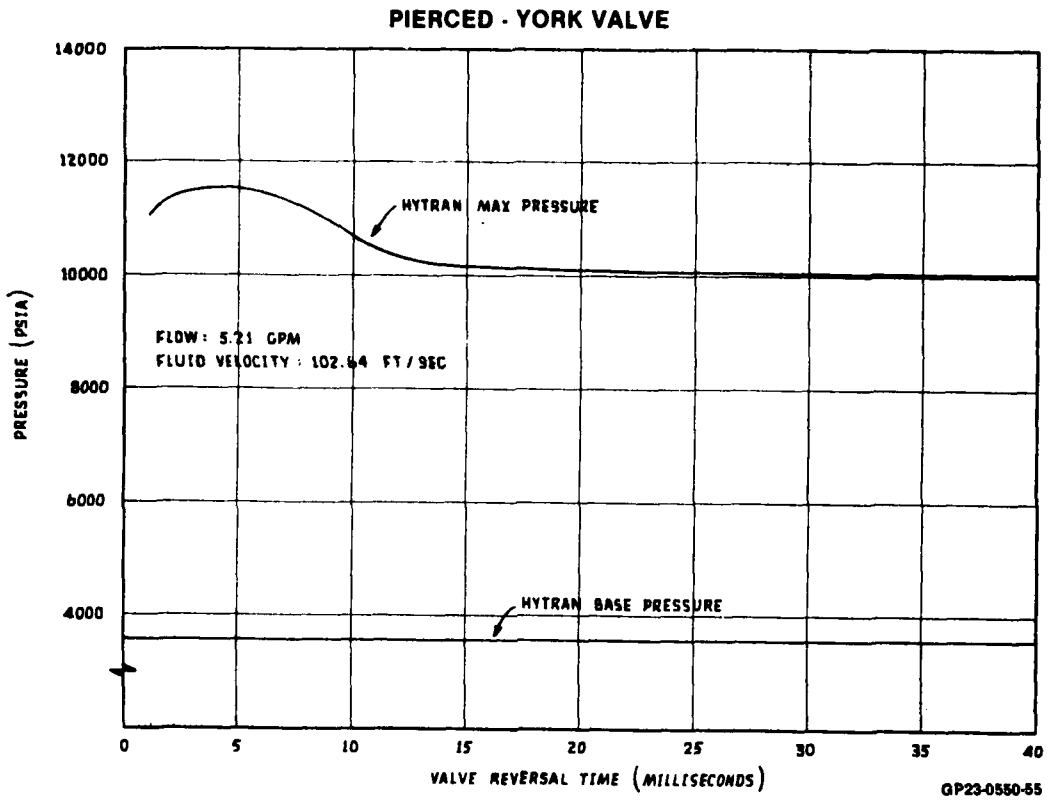

Figure 123.
F-15 R/H STABILATOR ACTUATOR WATER HAMMER CHARACTERISTICS
PC-1 SYSTEM
CTFE Fluid 8,000 PSI No-Load Pitch Reversal

Generally, system line diameters decrease (and velocity increases) as one travels from the pump to the inlet port on the actuator manifold. Where coiled tubing is used to compensate for actuator motion, the wall thickness is increased to keep stresses at an acceptable level. The result is still higher fluid velocities immediately upstream of the valve, which causes the higher transient. The localized transient "hump" is then due to trapping the transient in the coiled tubing for very fast valve reversals. As the reversal time is increased, the wave front moves further toward the pump before the flow starts again and average velocities are reduced. The average velocity is significantly lowered and the transient is reduced. For the L/H stabilator the non-linear valve-energy reflection point interactions increase the transient at slower valve reversals, see Figure 124 and 125.

Additional valve reversal times were simulated so that a valve reversal time vs peak pressure could be plotted for both the L/H and R/H stabilators.

Both linear and non-linear valves were considered. Figures 122 and 123 present the R/H stabilator results. In both cases the transient peaks out at about 5 millisecond reversals and then settles down at significantly lower levels. The non-linear valve peaks are significantly lower than the linear valve because the water hammer base is lower.

The transient peaking at fast valve reversals (1 to 10 milliseconds) is considered to be due to the local velocity increase in the coiled tubing immediately upstream of the valve and actuator.

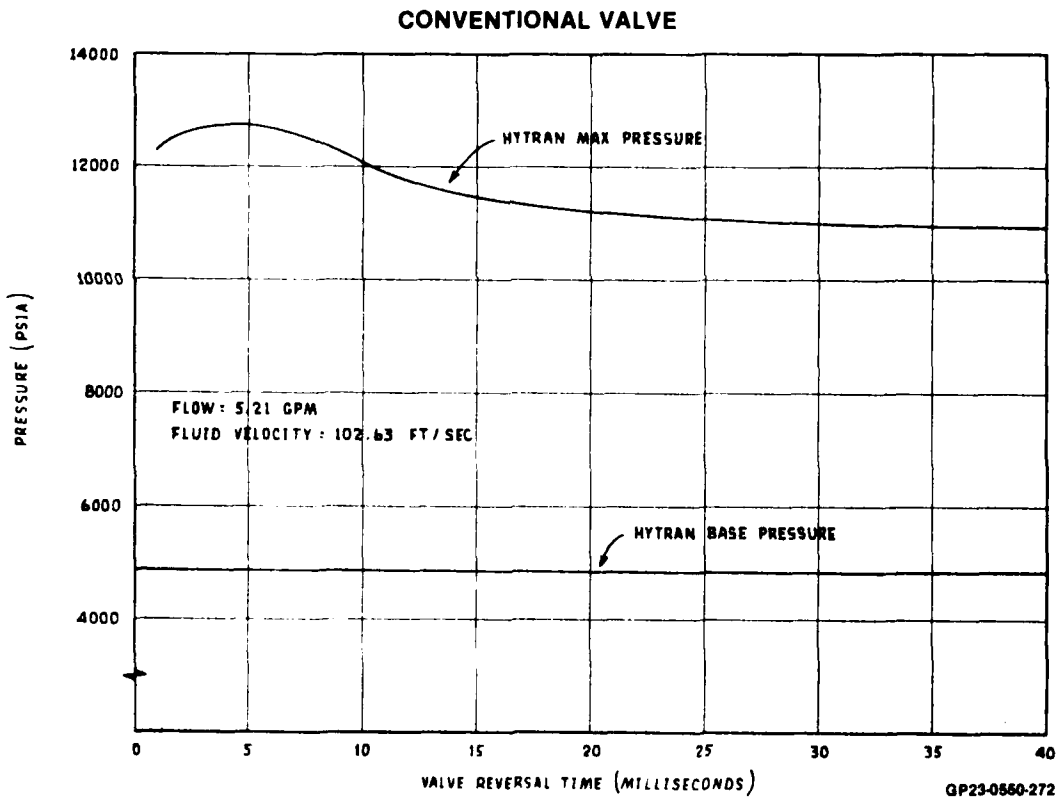

Figure 122.
F-15 R/H STABILATOR ACTUATOR WATER HAMMER CHARACTERISTICS
PC-1 SYSTEM
CTFE Fluid 8,000 PSI No-Load Pitch Reversal

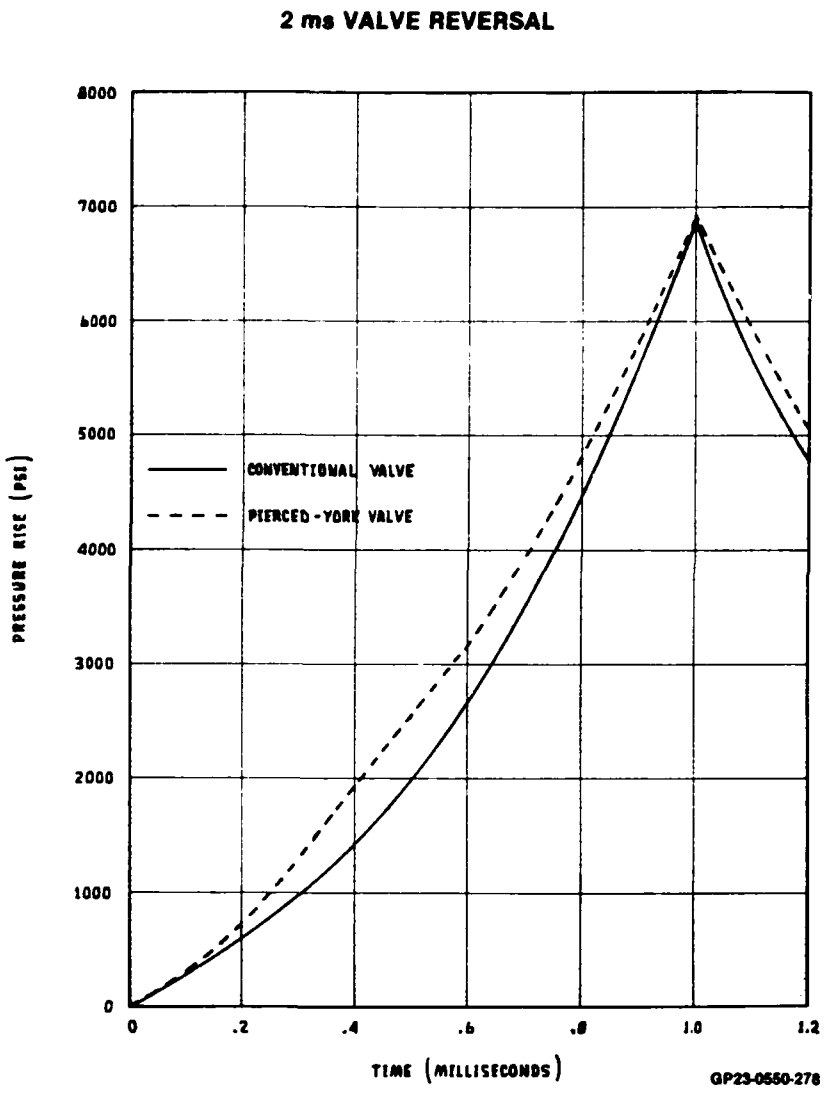

Figure 120.
F-15 STABILATOR ACTUATOR
WATER HAMMER PRESSURE RISE

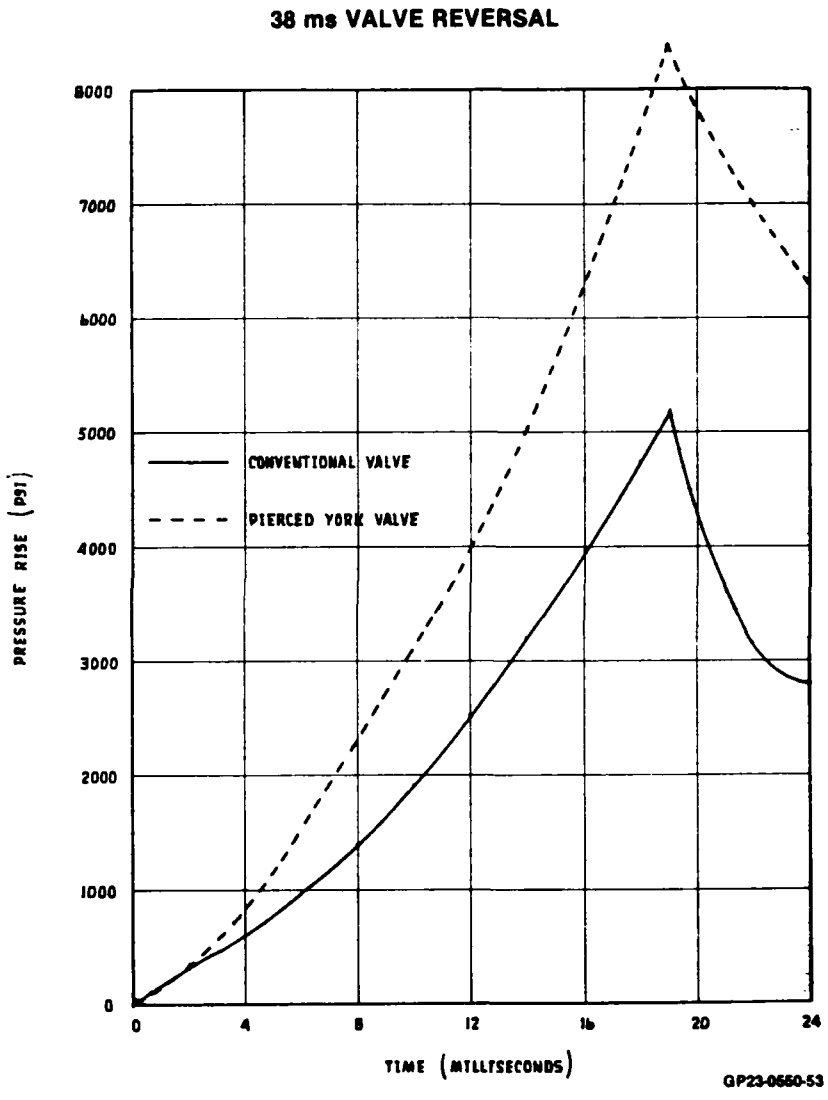

Figure 121.
F-15 STABILATOR ACTUATOR
WATER HAMMER PRESSURE RISE

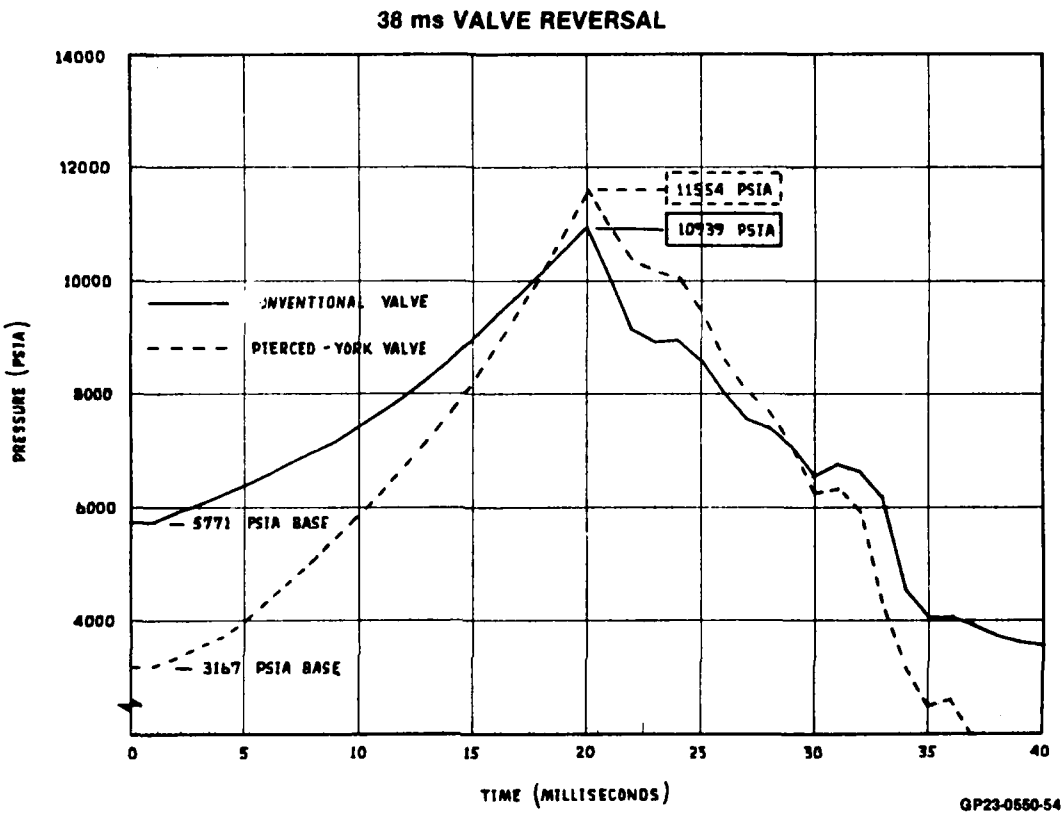

Figure 119.
F-15 L/H STABILATOR ACTUATOR PRESSURE - TIME HISTORY
PC-1 System No-Load Pitch Reversal

Conversely, the evaluation of L/H stabilator performance shows significant differences in performance between the two valves for the 38 millisecond valve reversal. The L/H stabilator is associated with a much more complex distribution system. The results are presented in Figures 118, 119, 120 and 121.

Figures 118 and 119 present the results (pressure vs time) for 2 millisecond and 38 millisecond valve reversals. The associated pressure rise vs time is given in Figures 120 and 121. The results of the 38 millisecond simulation show much higher pressure rise with the non-linear valve. (8300 psi vs 5200 psi.) This is believed to be due to the non-linear valve characteristics in conjunction with the energy reflection points in the system.

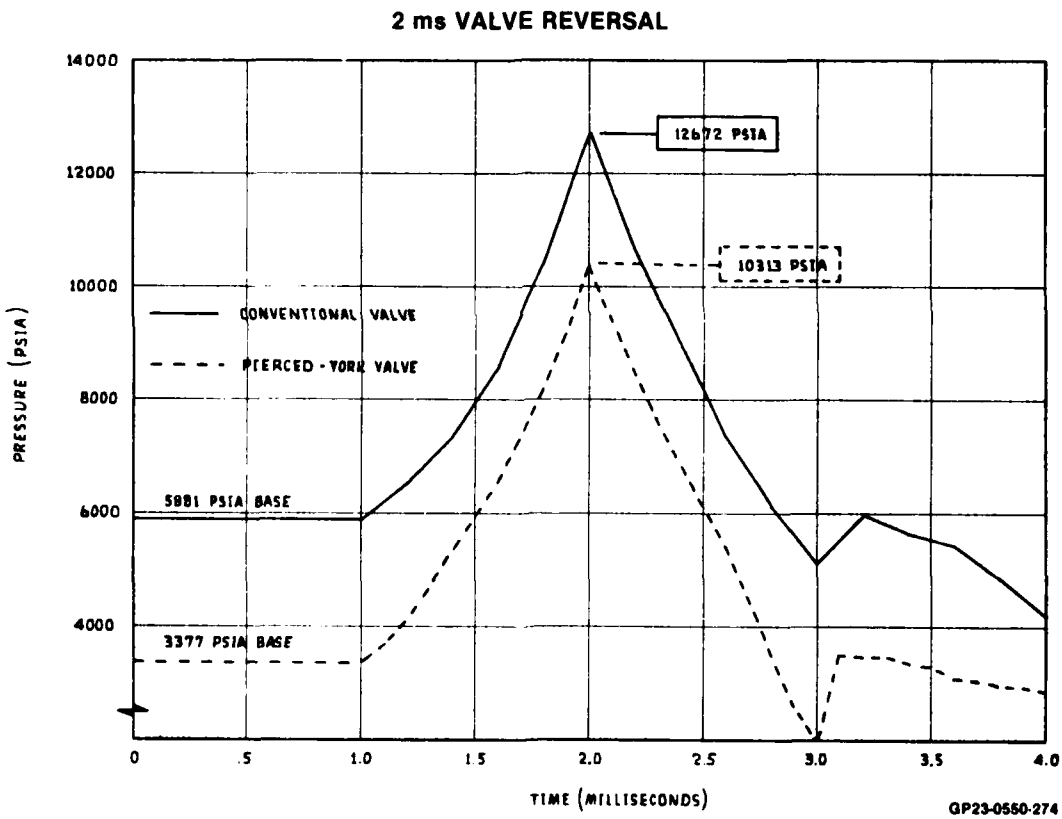

Figure 118.
F-15 L/H STABILATOR ACTUATOR PRESSURE - TIME HISTORY
PC-1 System No-Load Pitch Reversal

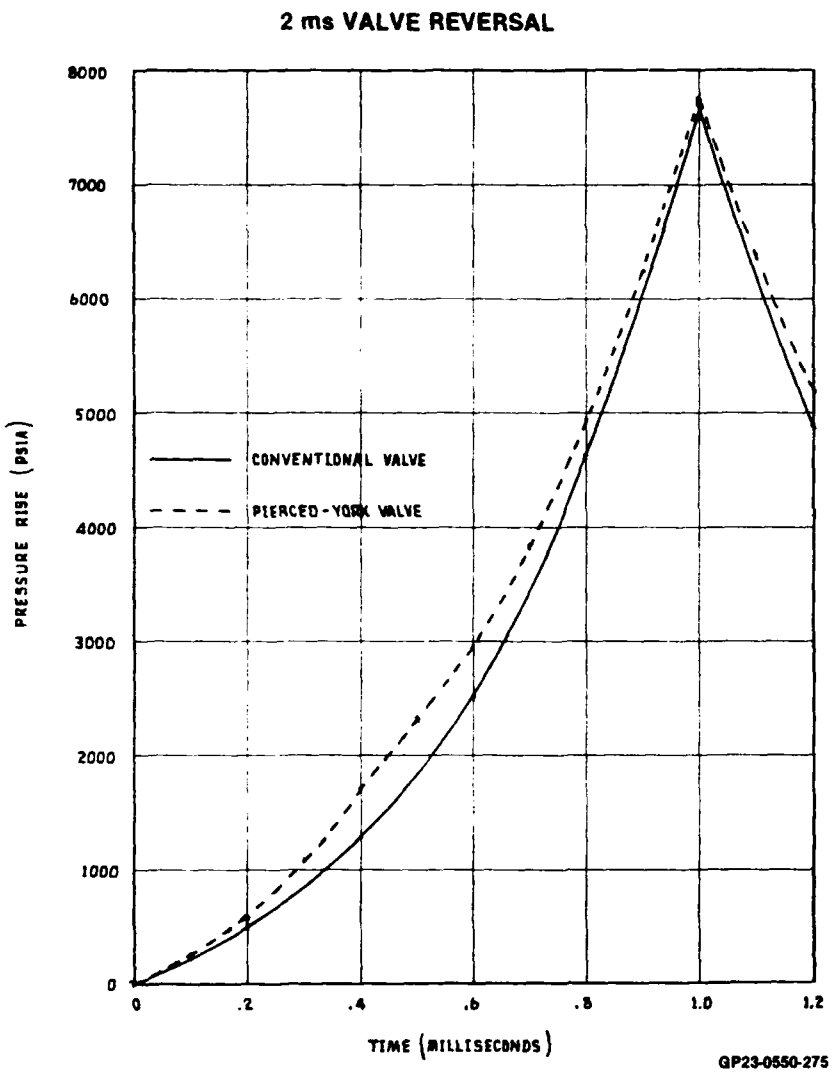

Figure 116.
F-15 R/H STABILATOR ACTUATOR
WATER HAMMER PRESSURE RISE

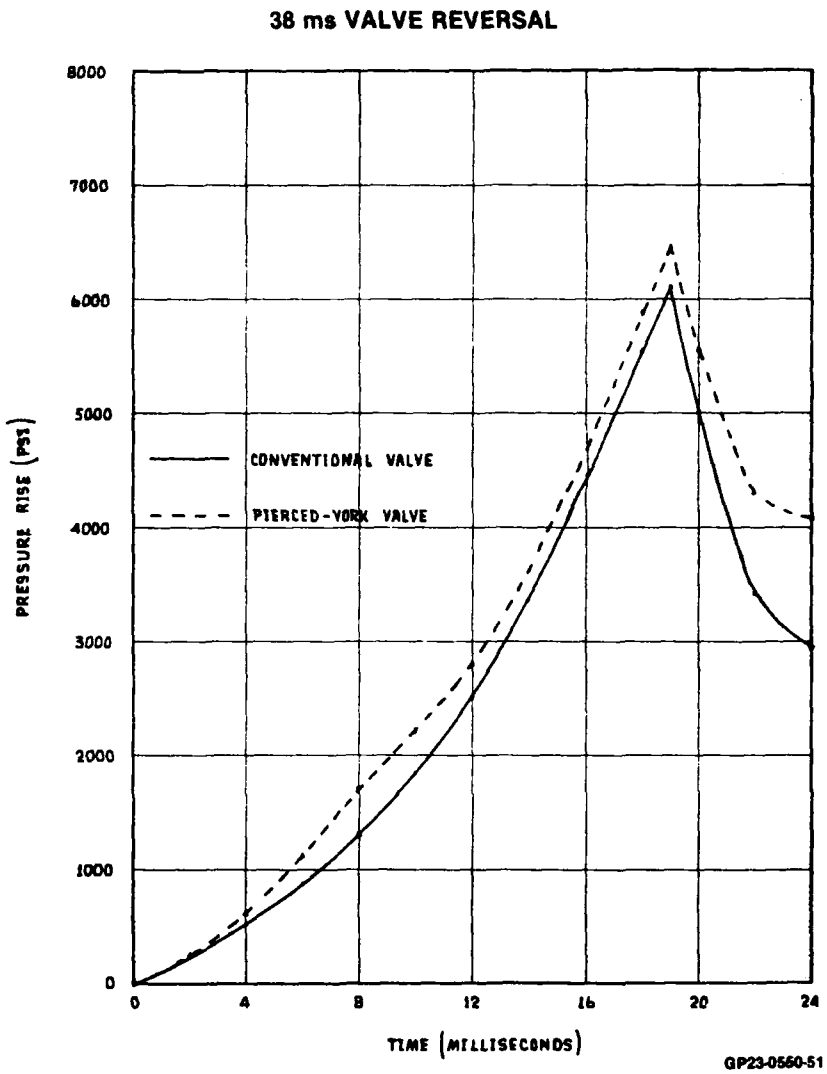

Figure 117.
F-15 R/H STABILATOR ACTUATOR
WATER HAMMER PRESSURE RISE

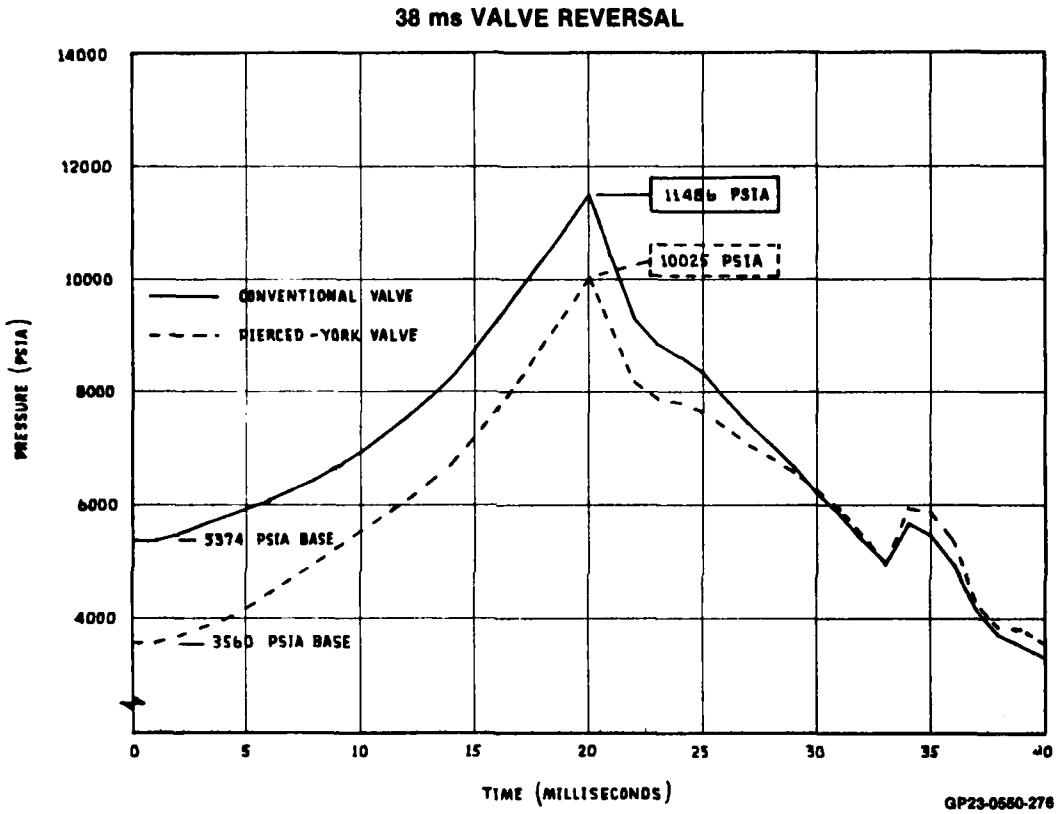

Figure 115.

F-15 R/H STABILATOR ACTUATOR PRESSURE - TIME HISTORY

PC-1 System No-Load Pitch Reversal

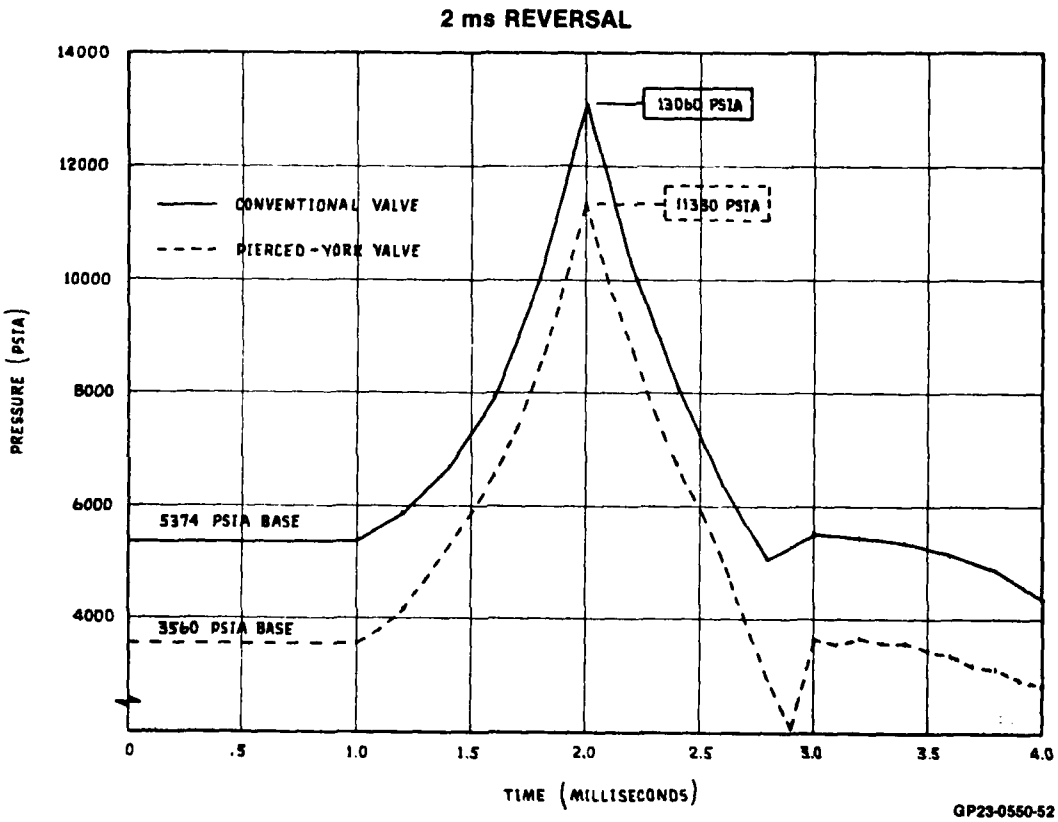

Figure 114.

F-15 R/H STABILATOR ACTUATOR PRESSURE - TIME HISTORY

PC-1 System No-Load Pitch Reversal

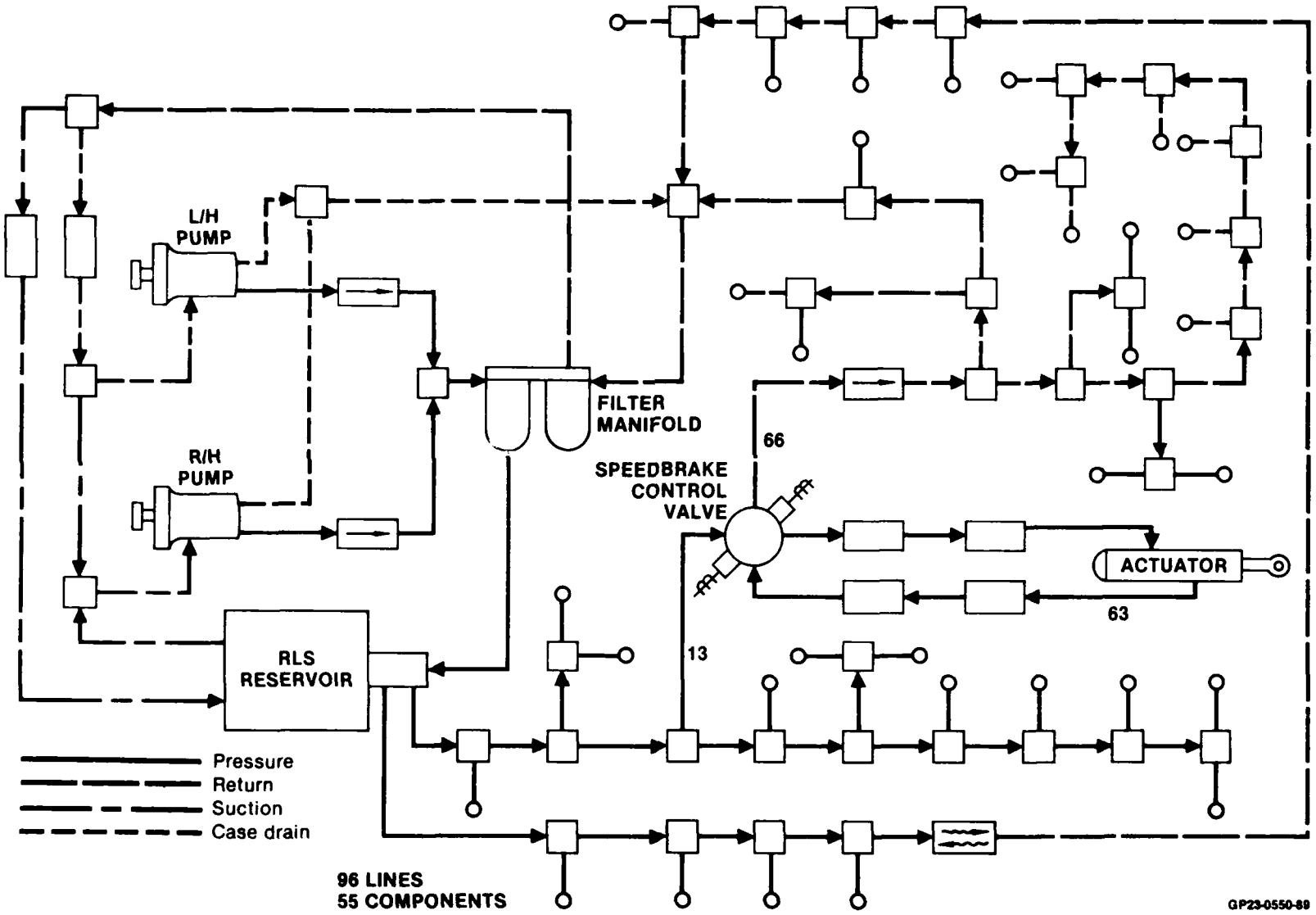

Figure 129.

F-15 UTILITY HYDRAULIC SYSTEM SPEEDBRAKE TEST CIRCUIT
HYTRAN LINE AND COMPONENT ARRANGEMENT

Twenty and fifty millisecond valve performances were analyzed. In addition, non-linear versions were analyzed. The operating time refers to the time required from initiation to completion of orifice opening.

Valve closure which generates upstream transients was of primary interest. In addition, pressure side transients due to actuator bottoming and return side transients due to releasing stored energy were of interest.

A subsystem operating cycle was established which provided answers to the questions posed. Figure 130 presents the operating cycle used in the HYTRAN simulation of the F-15 speed brake subsystem. The valve is opened to extend the actuator, then closed after a partial extension. This portion of the cycle provides the upstream transient pressure results desired.

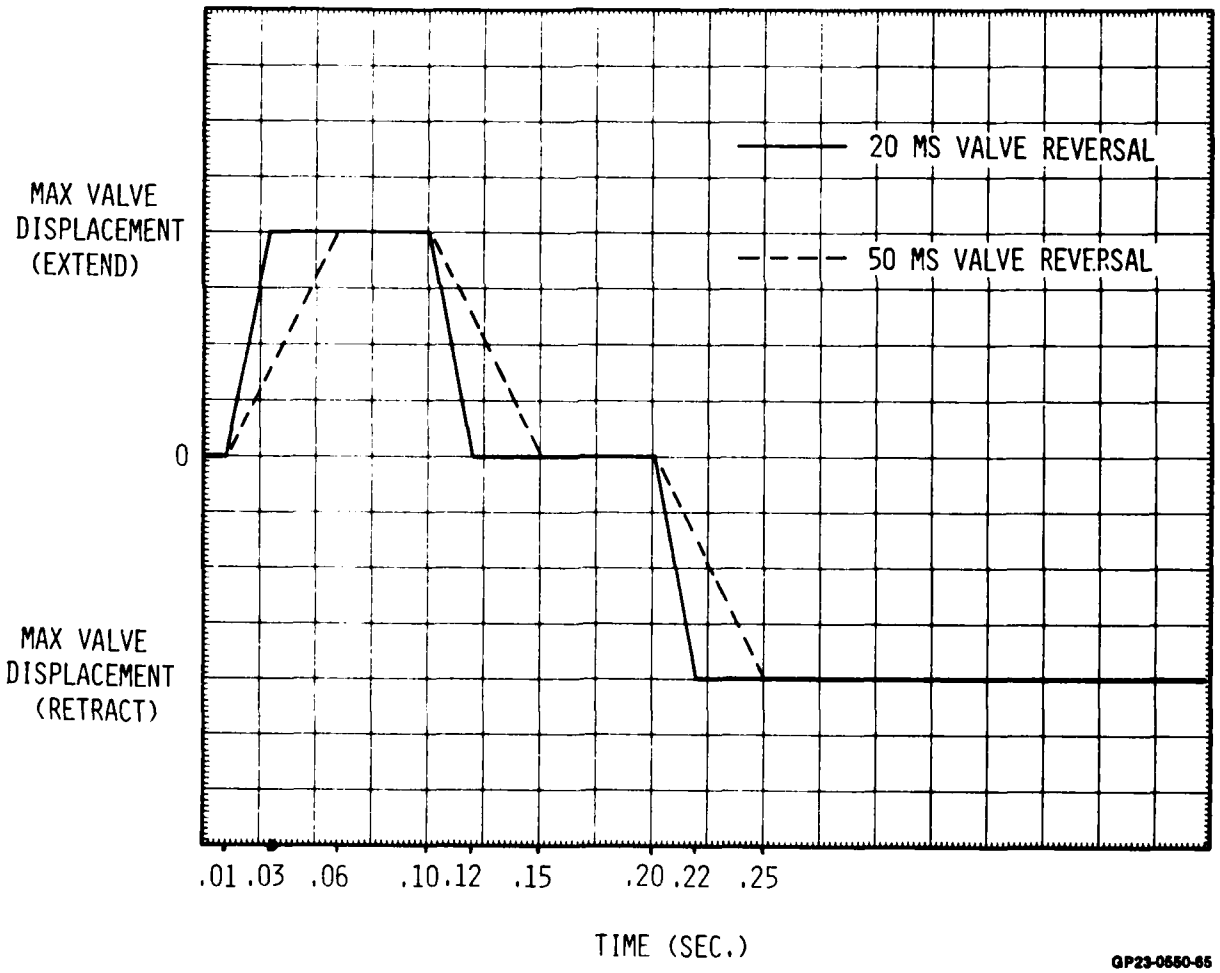

Figure 130.

F-15 SPEEDBRAKE OPERATING CYCLE

The subsequent initiation of the actuator retraction provides return transient results since the pressure trapped in the actuator during hold is dumped to return. Finally, maintaining the control valve in an actuator retract position gives the actuator bottoming transient results desired. Both 20 ms and 50 ms operating time valves were used.

Non-linear valve opening and closing characteristics can be powerful in controlling transients. Therefore, linear and non-linear valves were evaluated. Figure 131 presents the linear and non-linear characteristics used. Type 4 is non-linear and type 32 is linear.

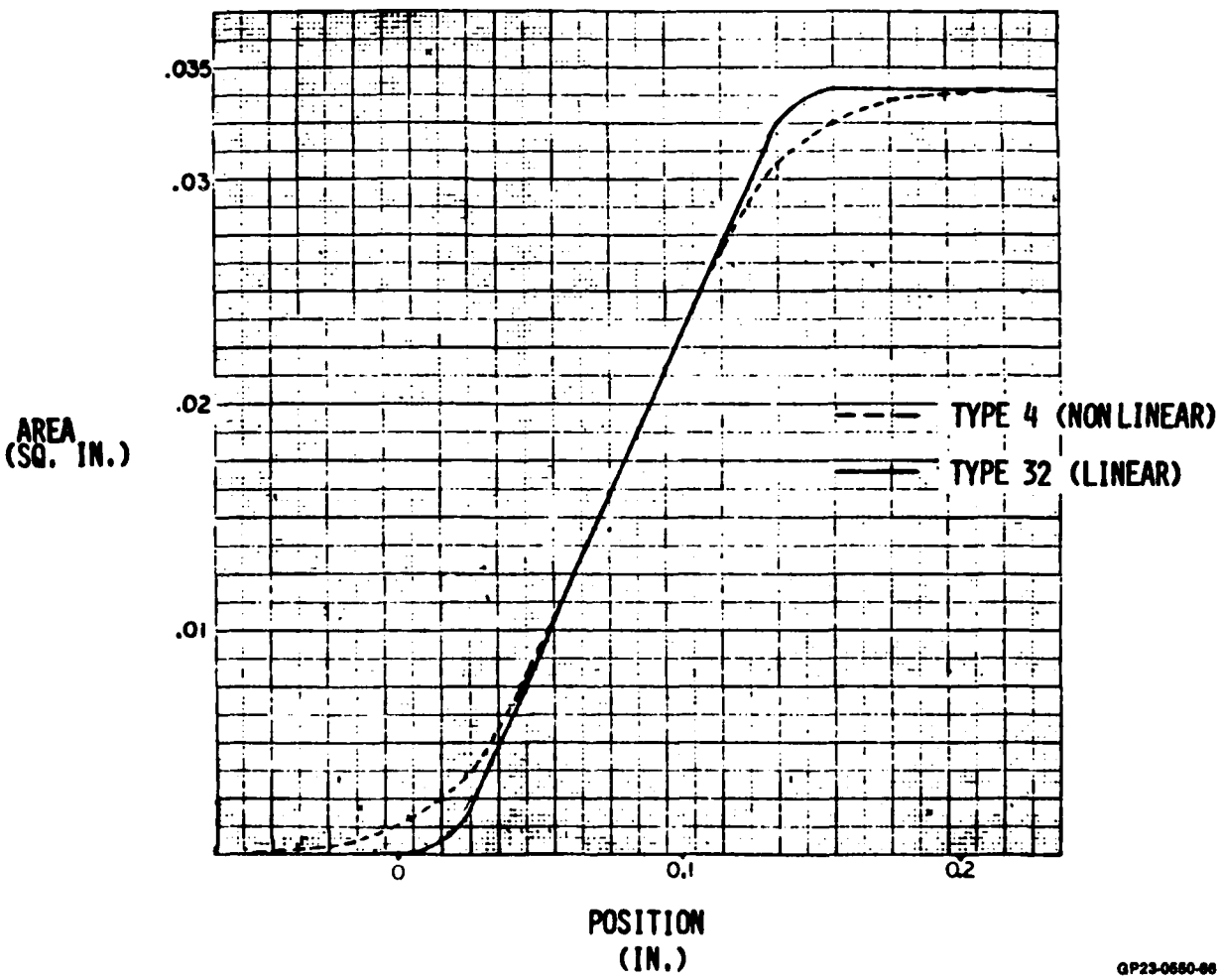

Figure 131.
VALVE CHARACTERISTIC CURVES

The HYTRAN simulation results are quite interesting. Upstream transients can be modified by controlling valve closing time or by valve non-linearity. Figure 132 presents a pressure vs time prediction of system pressure immediately upstream of the valve.

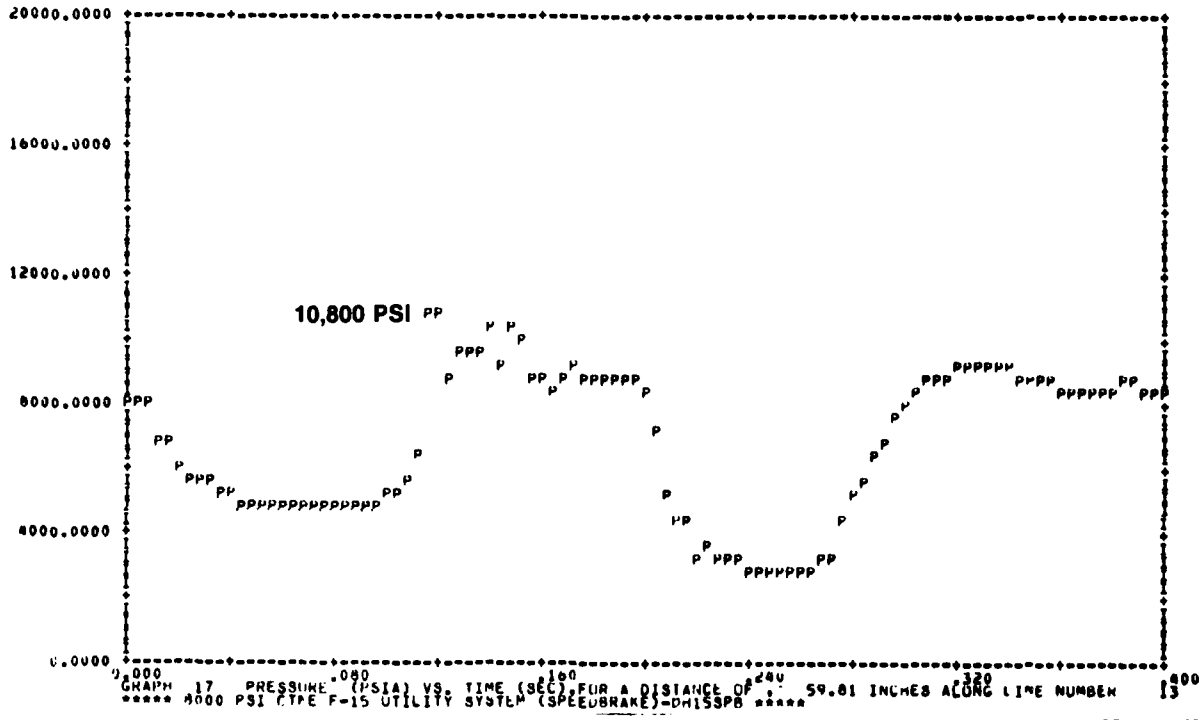

GP23-0550-68

Figure 132.
PRESSURE UPSTREAM OF VALVE
TYPE 32 CHARACTERISTIC CURVE
20 ms VALVE REVERSAL

The valve configuration used was linear, operating at 20 ms time for full valve stroke. The predicted peak was approximately 11,000 psi. Controlling the peak to 9600 psi maximum is the objective. Figure 133 presents predicted pressure immediately upstream of the actuator. The pressure peaks at 9500 psi on actuator bottoming.

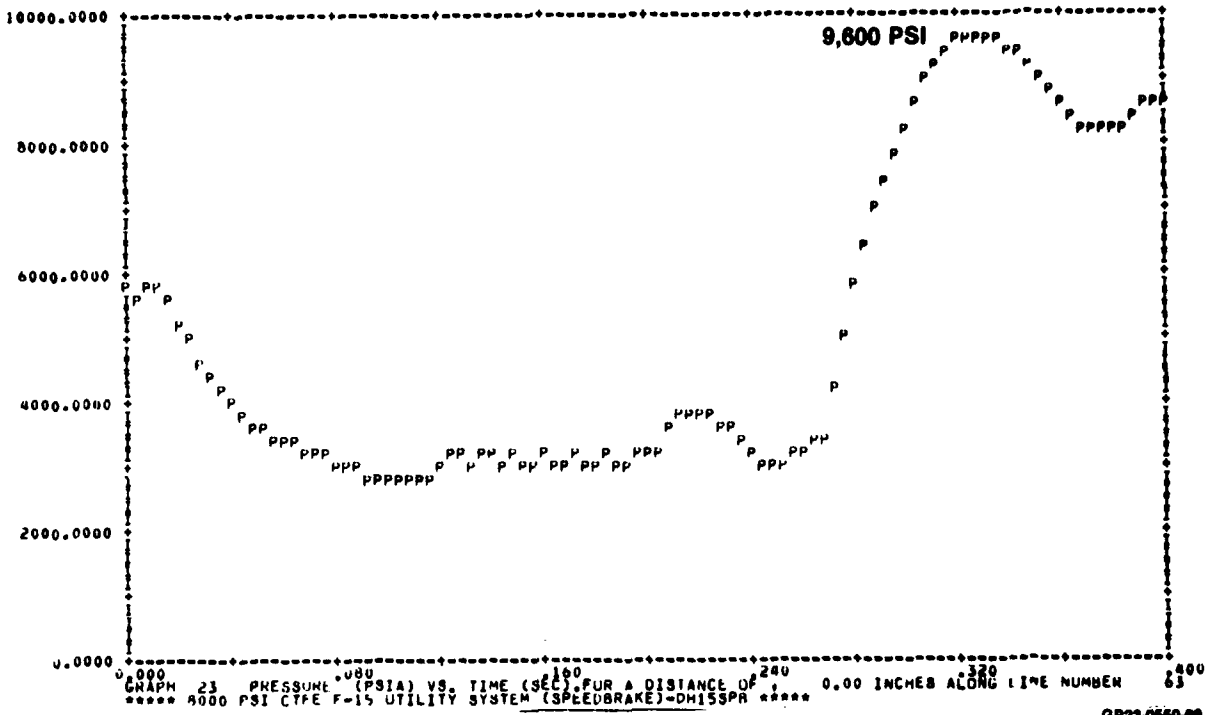

Figure 133.

PRESSURE UPSTREAM OF ACTUATOR
TYPE 32 CHARACTERISTIC CURVE
20 ms VALVE REVERSAL

For the next simulation, the valve operating duration was 50 milliseconds and the linearity (type 32) was maintained. Figure 134 presents the predicted pressure vs time printout results. The peak pressure was 9800 psi, a reduction of about 1200 psi.

The final simulation evaluated the use of the non-linear (type 4) valve at a 20 millisecond stroke. The upstream pressure transient characteristic predicted is presented in Figure 135. The predicted peak is 8200-8300 psi vs the desired 9600 psi maximum. From the above results one can conclude that the non-linear concept is much more powerful than the valve time. In any event, upstream transient control for this type of system can be controlled with very acceptable state-of-the-art techniques.

The return transient predicted when trapped pressure is dumped into the return system is presented in Figure 136. The predicted peak immediately downstream of the valve is about 3500 psi. This seems reasonable and acceptable. The valve used in the simulation was also the 20 ms, nonlinear valve.

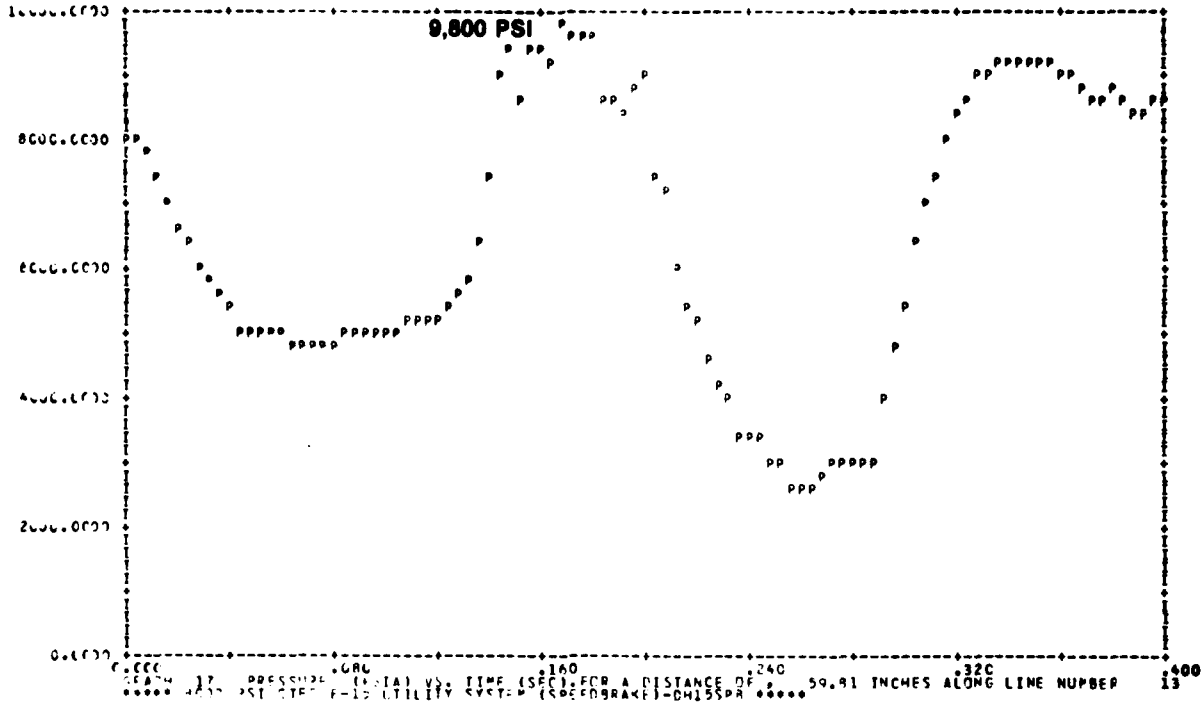

GP23-0550-67

Figure 134.

BASELINE
PRESSURE UPSTREAM OF VALVE
TYPE 32 CHARACTERISTIC CURVE
50 ms VALVE REVERSAL

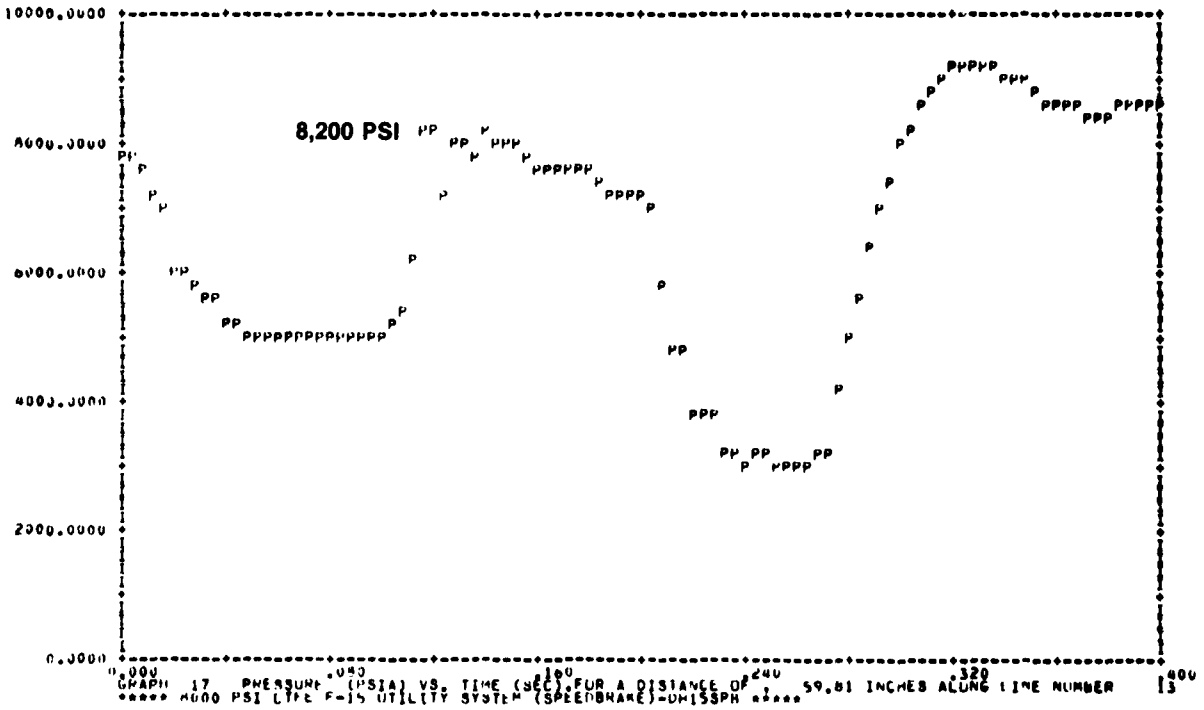

GP23-0550-70

Figure 135.

PRESSURE UPSTREAM OF VALVE
TYPE 4 CHARACTERISTIC CURVE
20 ms VALVE REVERSAL

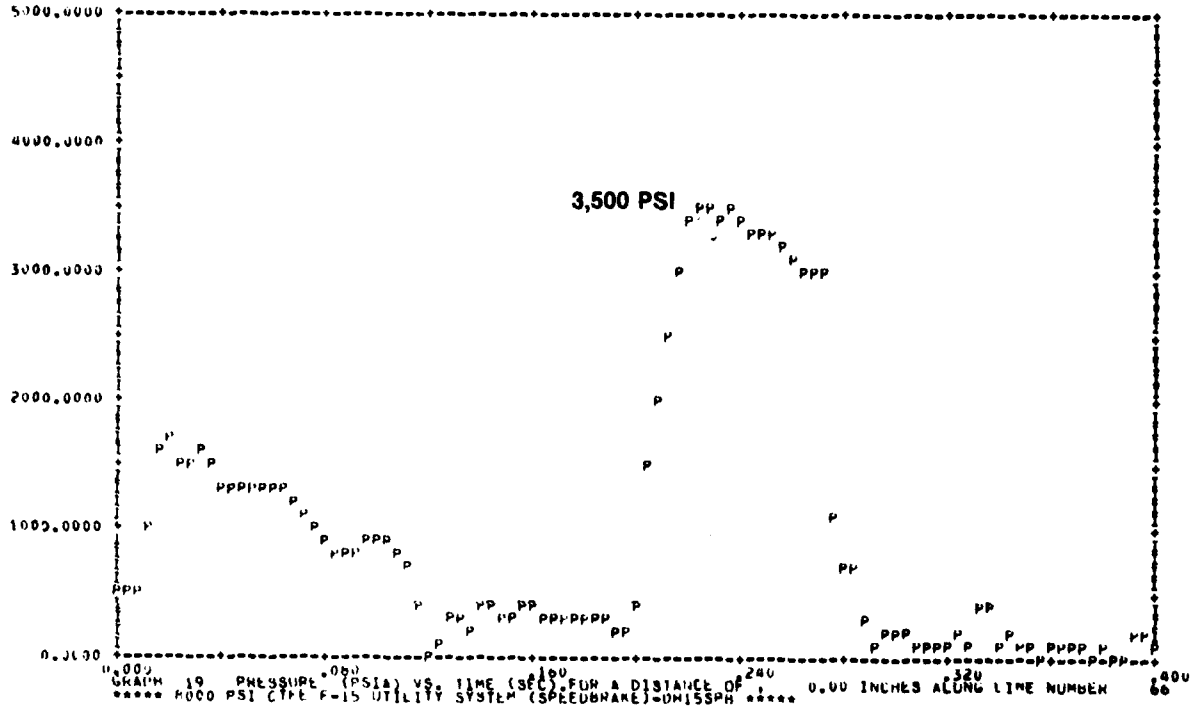

GP23-0550-71

Figure 136.
PRESSURE DOWNSTREAM OF VALVE (RETURN SYSTEM)
TYPE 4 CHARACTERISTIC CURVE
20 ms VALVE REVERSAL

2.3.2.7.2 KC-10A - A spoiler and inboard elevator were modeled in conjunction with the central systems to determine the magnitude of the CTFE fluid system transients and find ways to control them. This was done with the systems sized and optimized at 8000 psi system pressure. The analysis is summarized in Figure 137. The computer analysis block schematic for system No. 3 is presented in Figure 138.

OBJECTIVE

- **STUDY PEAK SYSTEM PRESSURE vs VALVE REVERSAL TIME**

KC-10A SYSTEM 3 MODEL DESCRIPTION

- **MODEL LINE SIZES BASED ON SSFAN PROGRAM PREDICTIONS**
- **CONCEPTS INCORPORATED**
  - ASYMMETRIC PRESSURE DROP ABOUT THE NONLINEAR VALVE
  - ODD/EVEN LINE SIZES

SIMULATIONS

- **"HARD-OVER" VALVE REVERSAL FOR**
  - LEFT SPOILER NO. 3
  - RIGHT INBOARD ELEVATOR
- **VALVE REVERSAL TIMES RANGE FROM 20 TO 125 MILLISECONDS**
- **SIMULATIONS REPEATED FOR LOCAL VELOCITY REDUCTION AT RIGHT INBOARD ELEVATOR**

GP23-0550-77

Figure 137.

KC-10A HYDRAULIC SYSTEM NO. 3 HYTRAN ANALYSIS

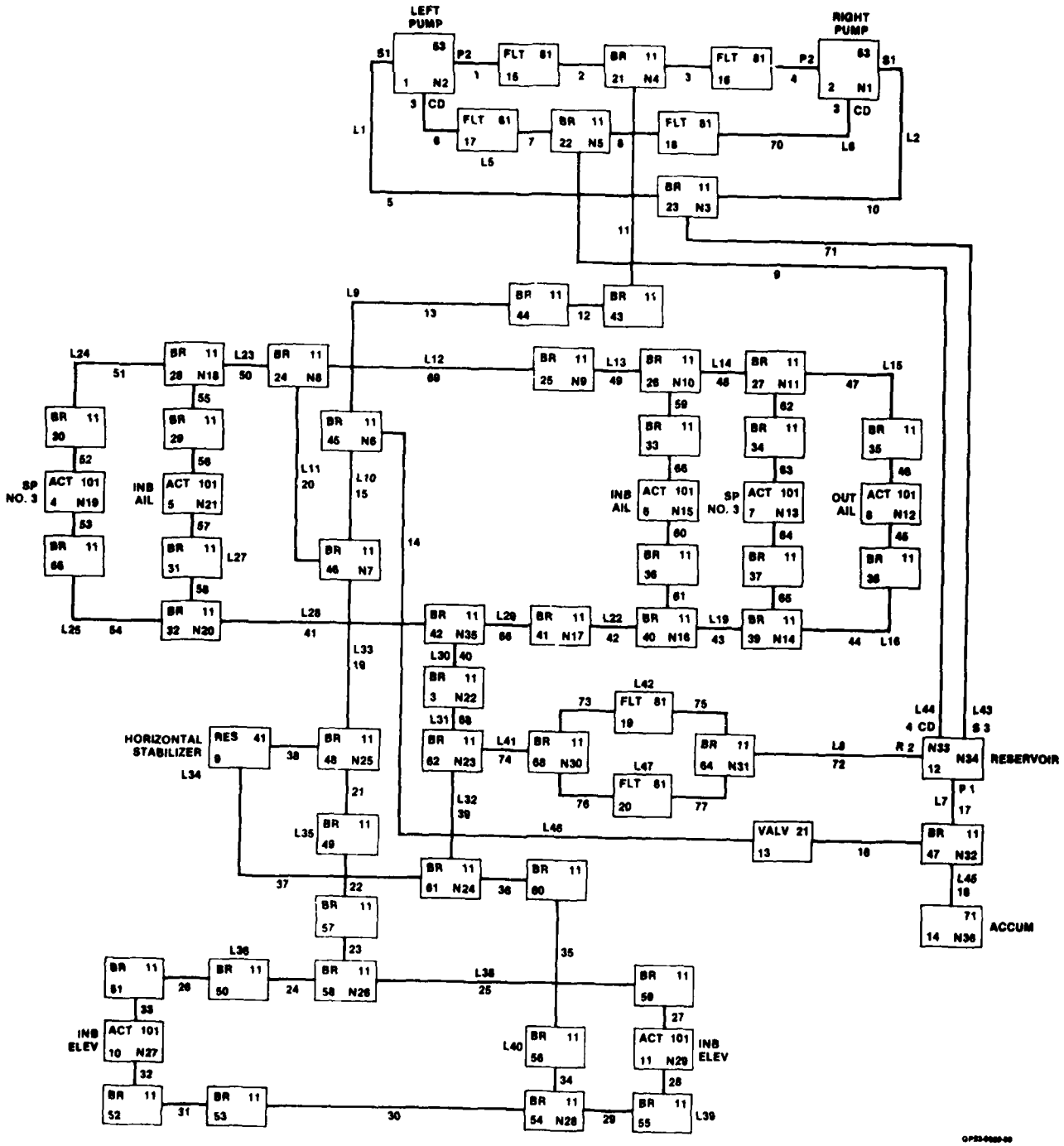

Figure 138.
KC-10A HYDRAULIC SYSTEM NO. 3 DIAGRAM

The predicted transient peaks immediately upstream of system No. 3 right inboard elevator and left number 3 spoiler are presented in Figures 139 and 140. The inboard elevator transient peaked at approximately 10,000 psi at 50 ms valve reversals.

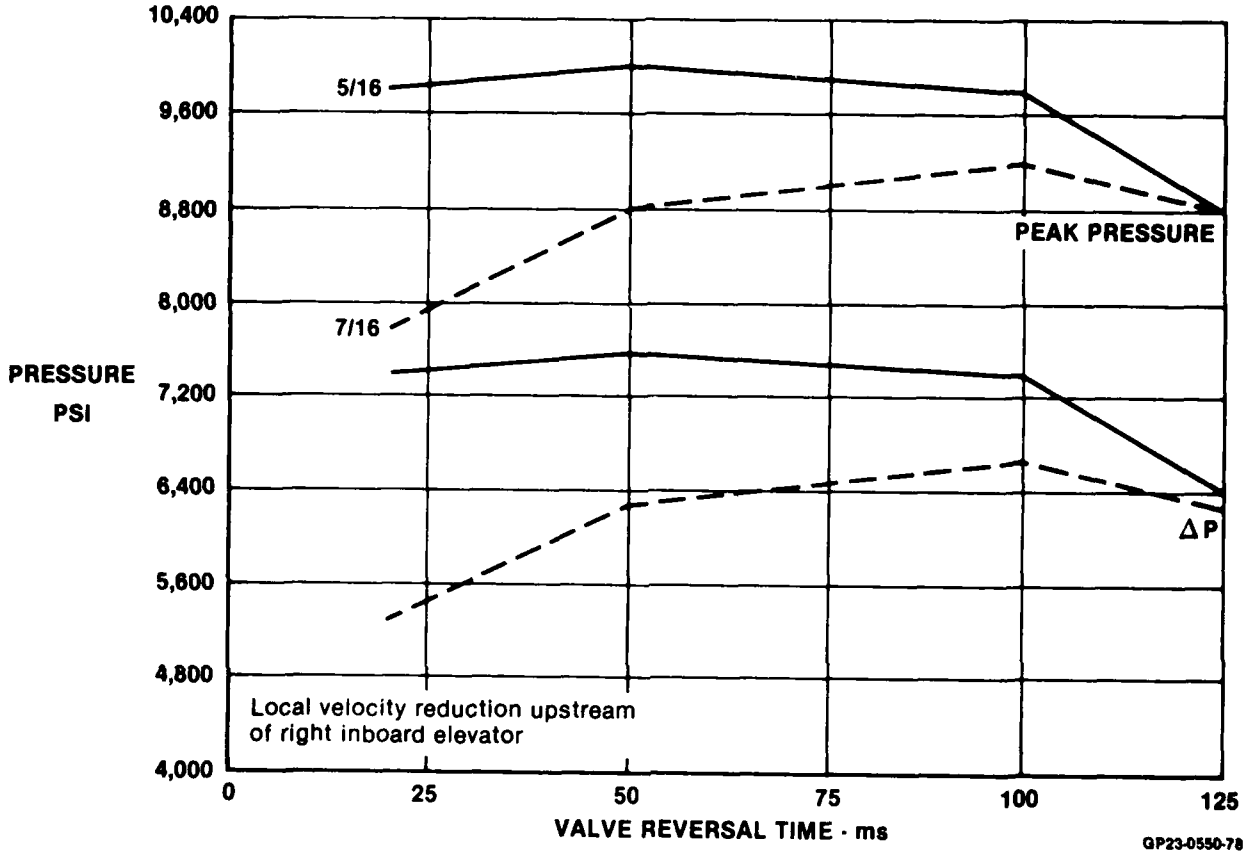

Figure 139.

KC-10A SYSTEM NO. 3
RIGHT INBOARD ELEVATOR
Pressure vs Time

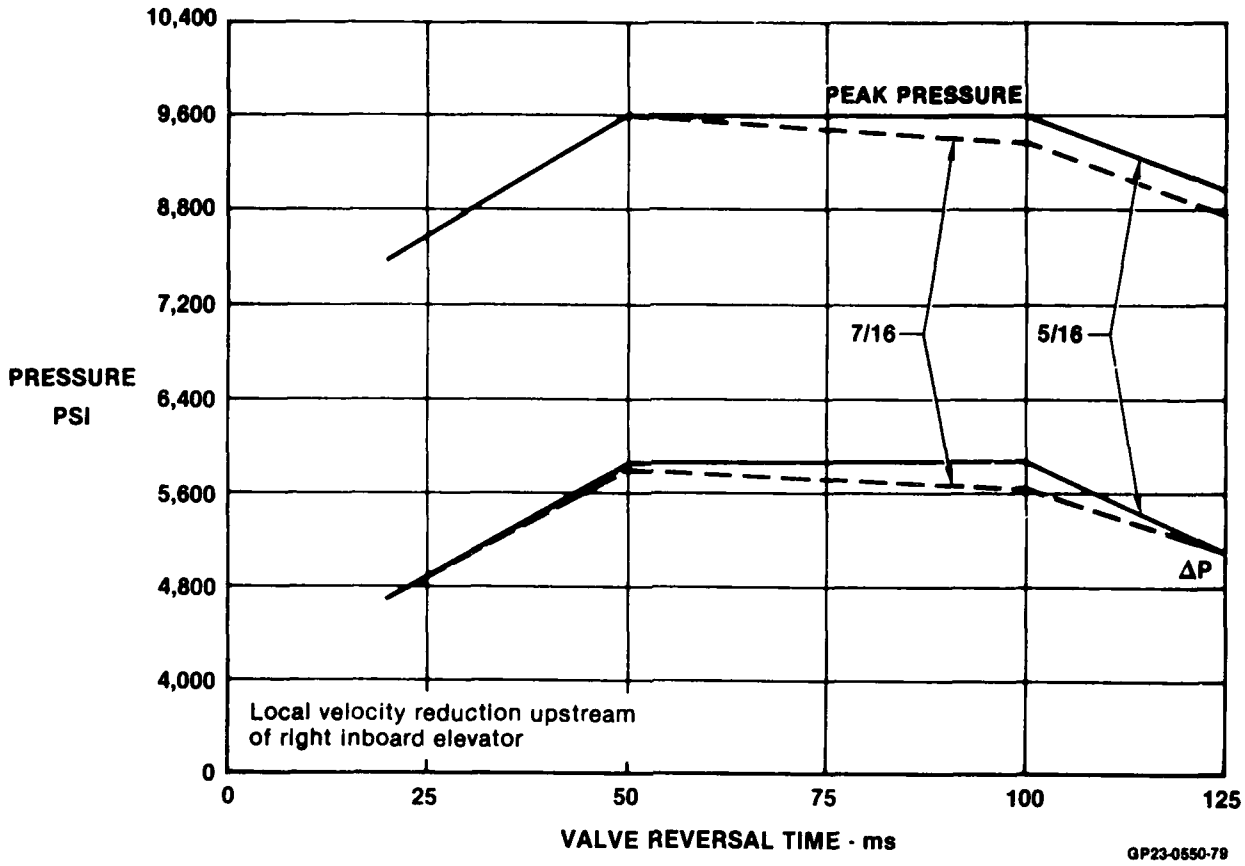

Figure 140.

KC-10A SYSTEM NO. 3 LEFT SPOILER NO. 3
Pressure vs Time

The pump was modeled accurately in this simulation. This accounts for the down turn in peaks beginning at 50 ms. The energy absorption characteristic are felt for reversals slower than 50 ms even though the time for the wave travel to the pump and return to the actuator is approximately 100 ms. Since the peak predicted was above 9600 psi, the coiled tube immediately upstream of the actuator was increased from 5/16 outside diameter to 7/16 outside diameter. This change reduced the peak to approximately 9100 psi at 100 ms valve reversals.

The left number 3 spoiler transient peaked at 9600 psi with the original configuration defined with SSFAN. The modification from 5/16 to 7/16 outside diameter coiled tubing at the right inboard elevator contributed to a small reduction in the spoiler transient for valve reversal times slower than 50 ms.

The KC-10A system's transient characteristics including trends associated with local velocity reduction were quite similar to those noted in the F-15 flight control systems analysis. Figures 141 through 144 present predicted transient wave forms for the spoiler and inboard elevator from which the points in Figures 139 and 140 were plotted.

The no load flowrate line velocities for 3000, 5500, 8000, and 10,000 systems are of interest. Figure 145 presents the no load flowrate velocities in the pressure side coiled tubing and feeder line immediately upstream of the coiled tubing for the KC-10A left hand inboard aileron. The maximum velocity (100.72 ft/sec) is in the production 3000 psi system in the coiled tubing. These velocities are typical for both the F-15 and the KC-10A.

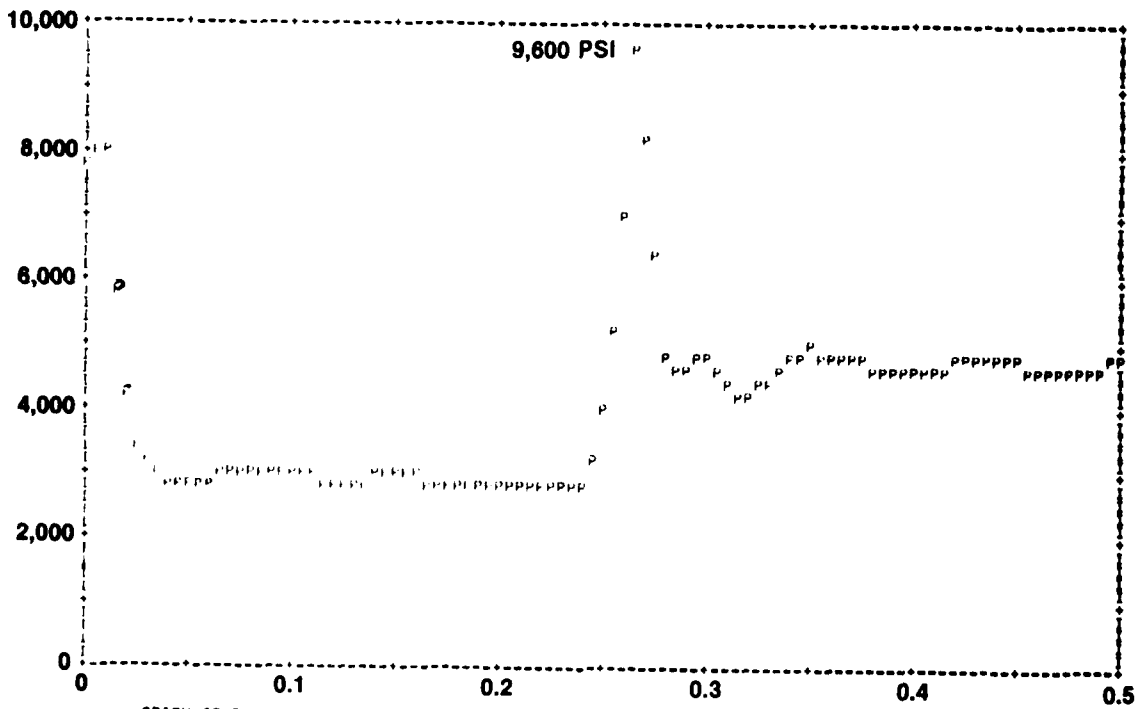

GRAPH 25 PRESSURE (PSIA) VS TIME (SEC) FOR A DISTANCE OF 18.00 INCHES ALONG LINE NUMBER 52
**** NO. THREE HYDRAULIC ONE PUMP SYSTEM (D108CNH)****

GP23-0550-61

FIGURE 141
KC-10A HYDRAULIC SYSTEM NO. 3
LEFT SPOILER NO. 3 PRESSURE
50 ms VALVE REVERSAL

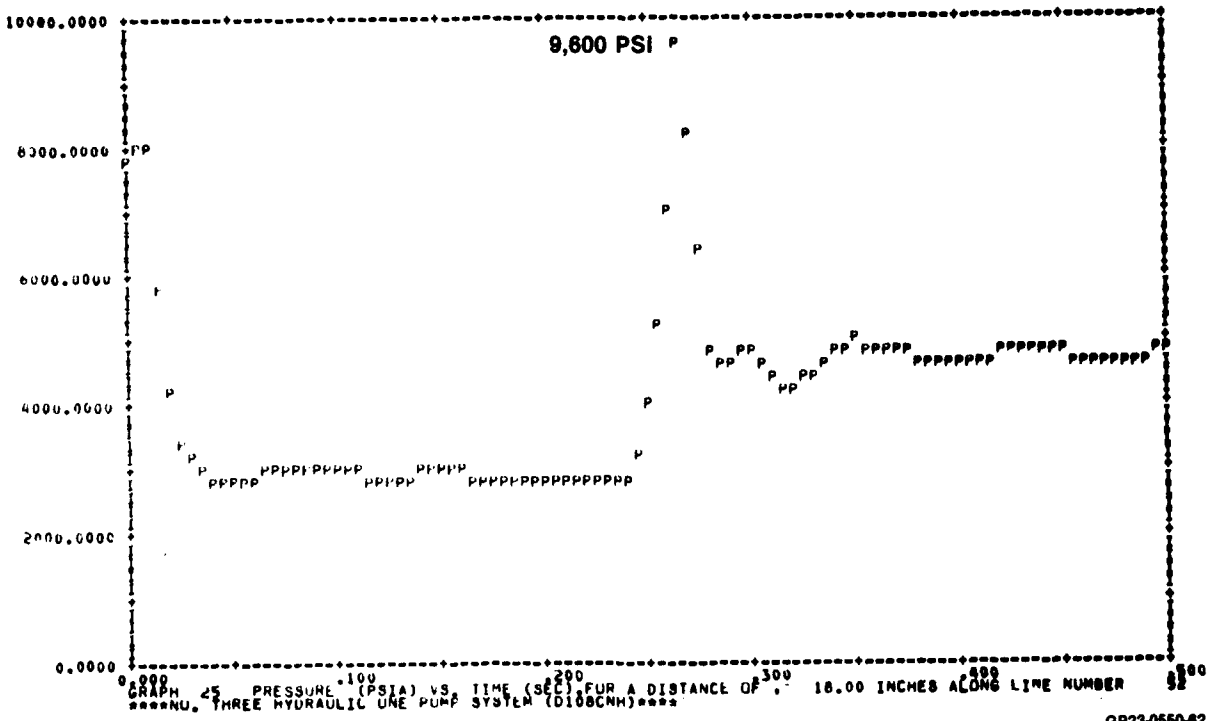

Figure 142.

KC-10A HYDRAULIC SYSTEM NO. 3 LEFT SPOILER NO. 3 PRESSURE
50 ms VALVE REVERSAL
Local Velocity Reduction

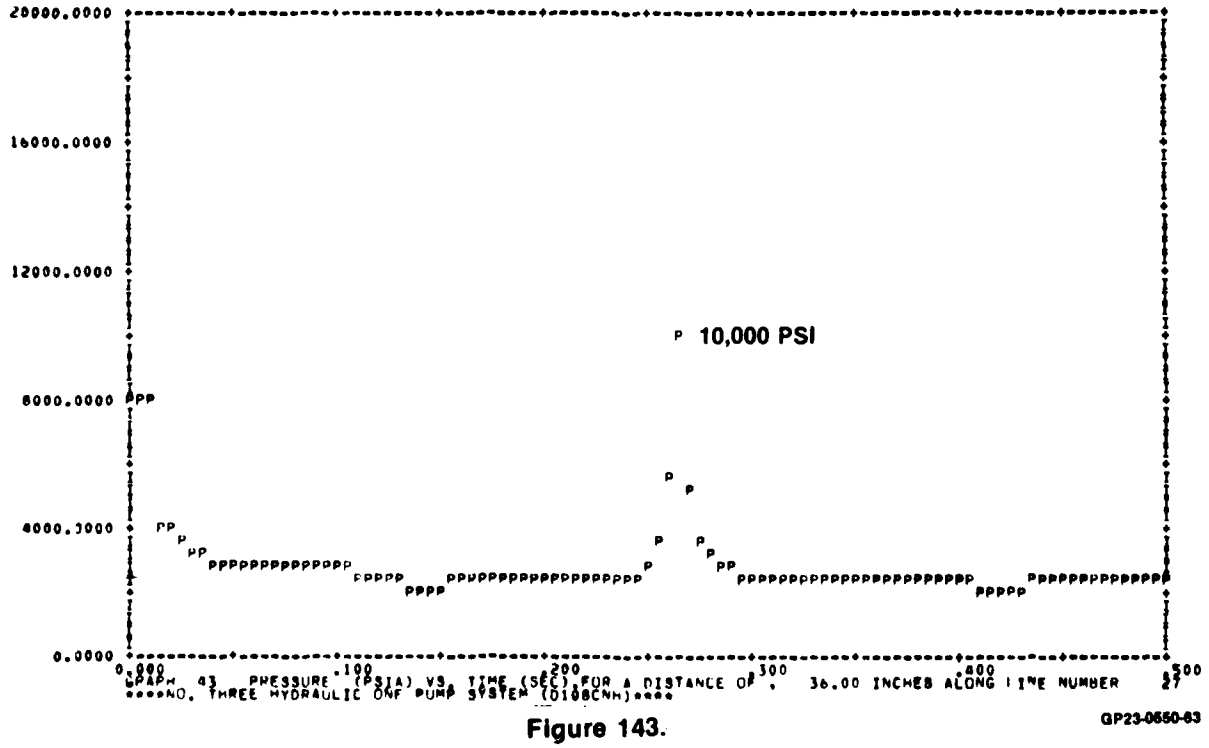

Figure 143.

KC-10A HYDRAULIC SYSTEM NO. 3
RIGHT INBOARD ELEVATOR
50 ms VALVE REVERSAL

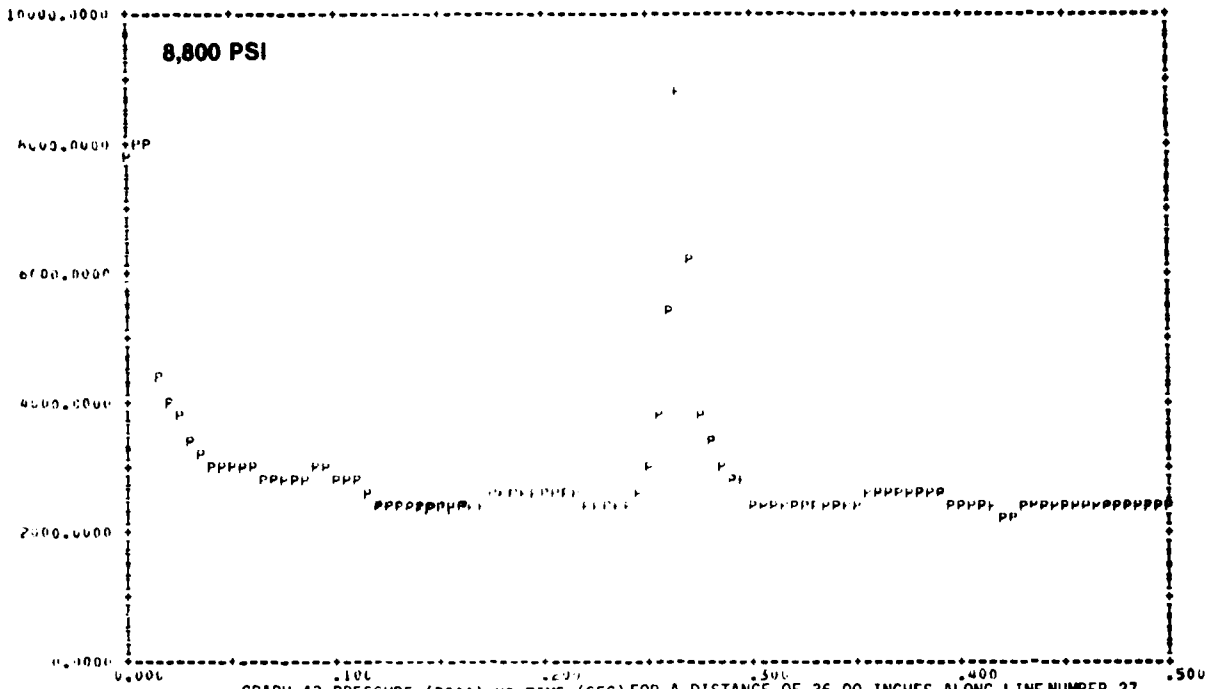

GP23-0550-64

FIGURE 144
KC-10A HYDRAULIC SYSTEM NO. 3 RIGHT INBOARD ELEVATOR
50 ms VALVE REVERSAL
Local Velocity Reduction

	FLOW AREA (IN.^{2})	PRESSURE (PSI)	$Q_{N\text{-}L}$ (GPM)	LINE VELOCITY (FT/SEC)
COILED TUBE SIZE				
– 5 x 0.035	0.46186	3,000	14.5	100.72
– 5 x 0.054	0.032845	5,500	7.9	77.16
– 5 x 0.066	0.02558	8,000	5.44	68.21
– 5 x 0.071	0.02283	10,000	4.35	61.09
FEEDER LINE SIZE				
– 6 x 0.020	0.08814	3,000	14.5	52.78
– 5 x 0.024	0.05494	5,500	7.9	46.12
– 3 x 0.018	0.01802	8,000	5.44	96.85
– 3 x 0.019	0.01755	10,000	4.35	79.52

GP23-0550-80

FIGURE 145
KC-10A SYSTEM NO. 3
LEFT HAND INBOARD AILERON
Steady State Line Velocities at the No-Load Flow Rates

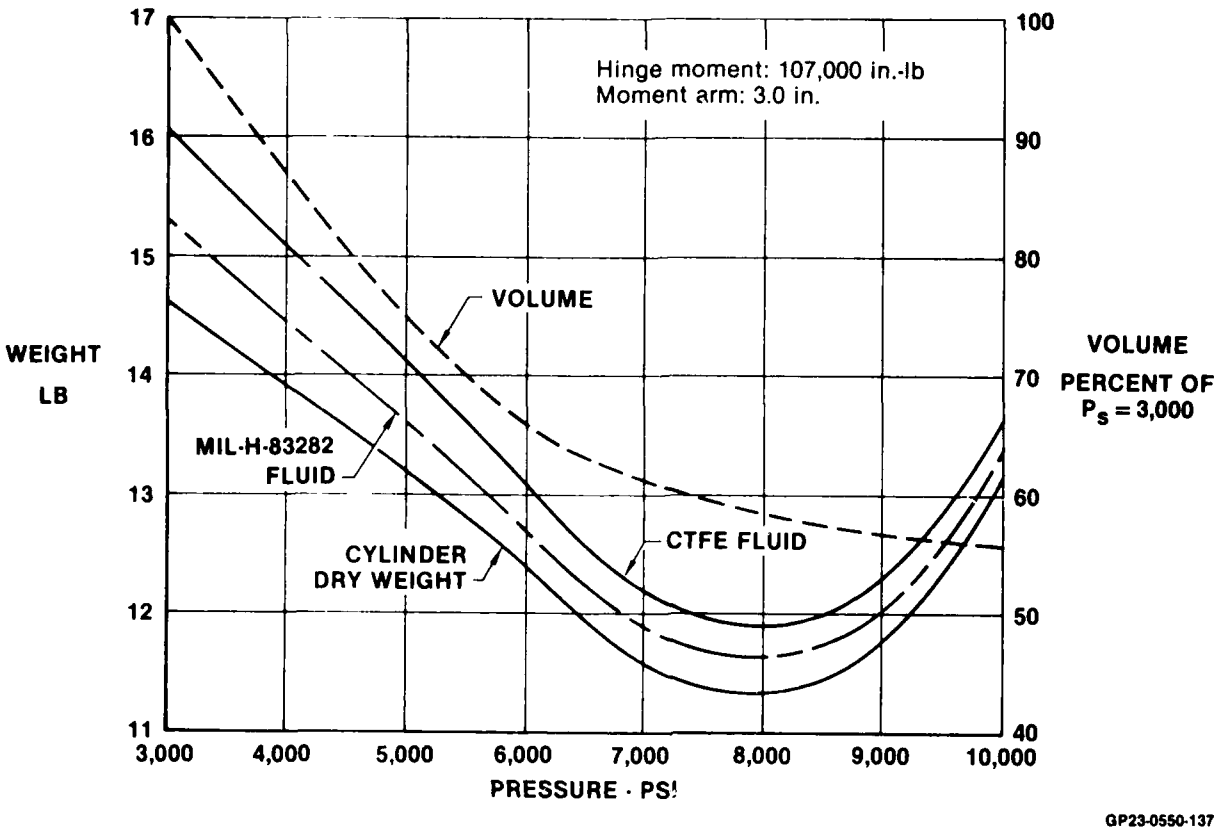

Figure 158.
ADVANCED DESIGN FIGHTER AILERON ACTUATOR
Single

III. Fighter Flap Actuator (See Figure 159)

a) Tandem Actuator

Results of the design work on the two different advanced design fighter flap actuators showed decreasing weight trends for increasing operating pressure. However, the advanced design fighter aileron actuator weight estimates reached a low point around 8000 psi, then turned to an increasing weight with increasing pressure trend.

I. Fighter Flap Actuator (See Figure 157)

a) Single piston actuator
b) Tandem piston actuator
c) Single piston actuator, two required per flap surface

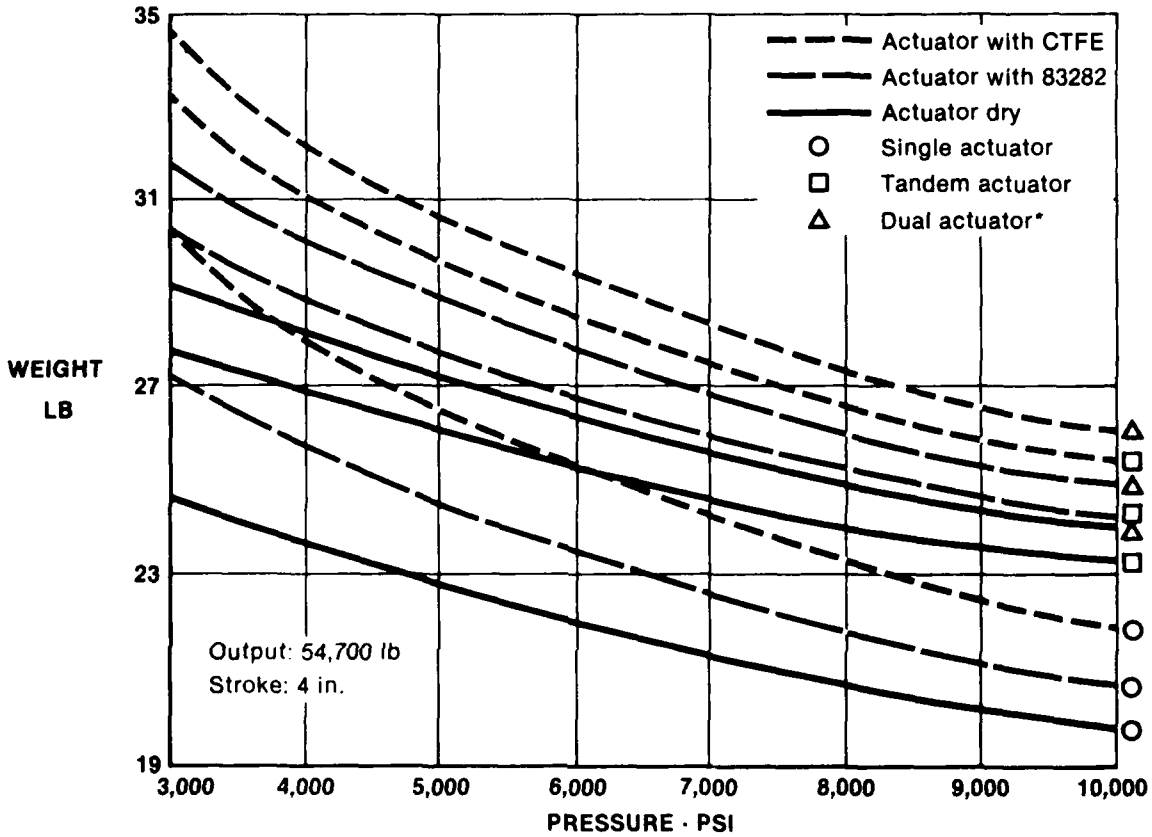

*Two actuators required per flap surface

GP23-0550-138

Figure 157.
ADVANCED DESIGN FIGHTER FLAP ACTUATOR

II. Fighter Aileron Actuator (See Figure 158)

a) Single piston actuator
b) Single piston actuator, two required per aileron (Estimated at 3000 and 8000 psi)

In summary; the nonlinear valve evaluated will generate somewhat higher transients than a linear valve. The high response pump system transients are slightly higher for faster valve operating times but help attenuate transients for slower valve operating times. Location of positive reflection points such as restrictors or line size reductions close to the control valve is to be avoided.

2.3.2.8 Pressure Selection for Continued Analysis - 8000 psi was selected for continued analysis. The hydraulic system weight versus system pressure curves in Section 2.3.2.6 show a continued decrease in weight with pressure through 10,000 psi. However, the smaller aircraft (F-15) curve tends to level out at 10,000 psi, indicating an optimum design point for the factors studied has been reached. Figure 156 shows the reasons why 8000 psi was selected. 8000 psi has been under study for the past several years by the Navy. A unified stand for switching to higher pressure by both the Navy and Air Force would be desirable.

- **WEIGHT - FUEL COST INTERACTION DEMANDS MAXIMUM PRACTICAL WEIGHT SAVINGS**
- **F-15 TREND SHOWS DIMINISHING RETURNS BEYOND 8,000 PSI**
- **FOR BOTH F-15 AND KC-10A OPTIMIZING ACTUATOR AREAS vs PRESSURE ABOVE 8,000 PSI IS INCREASINGLY DIFFICULT**
- **8,000 PSI "ESTABLISHED AND GOING" BY THE NAVY**
- **AIR FORCE - NAVY UNIFIED STAND DESIRABLE IN ACHIEVING SWITCHOVER TO HIGHER PRESSURE**

GP23-0550-248

Figure 156.
PRESSURE SELECTION - 8,000 PSI

2.3.2.9 Advanced Design Actuators - Initial designs of aileron and flap actuators were made for 1990's concept fighters per the advanced design requirements. Actuators were designed with the same techniques used for the F-15 actuator redesign, although with new rod ends, bearings, etc., (this was a new design and not subject to the constraints of any existing structure). Valve manifolds were assumed to be mounted separately from the actuators. Both aileron and flap actuators were considered to be part of an integrated, control-by-wire approach and to include a position transducer (LVDT). Actuators were designed for combinations of single, tandem, and dual singles, each at half load for 3000, 5500, 8000, and 10,000 psi systems operating pressures as follows:

Figure 155 slows the results of the effects of an area change on transient peaks. These results involve reflective circuits 1, 3 and 6. Number 1 circuit has the restrictors used to provide a reflection point located 844 inches upstream. There is no change in peaking characteristics. However, when the location is changed to 17 inches from the control valves a rather dramatic increase occurs. At 50 milliseconds, the increase is approximately 39% (1100 psi). At 400 milliseconds, the increase is approximately 15% (700 psi). The difference between linear and non-linear valves remains the same and the difference between constant pressure sources and the high response pump is quite similar to previous results.

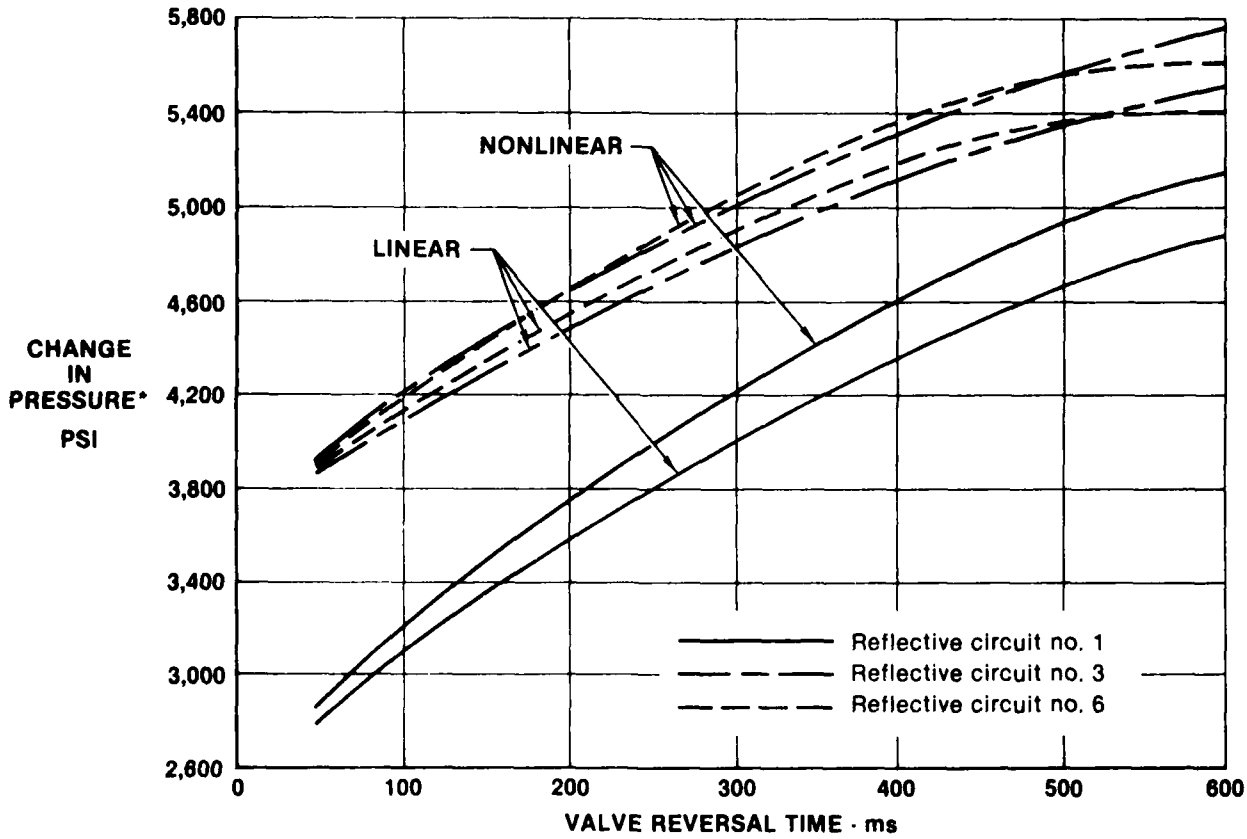

*Equals peak pressure less initial pressure

Figure 155.
PRESSURE RISE vs VALVE REVERSAL TIME
Area Change Effect on Transients

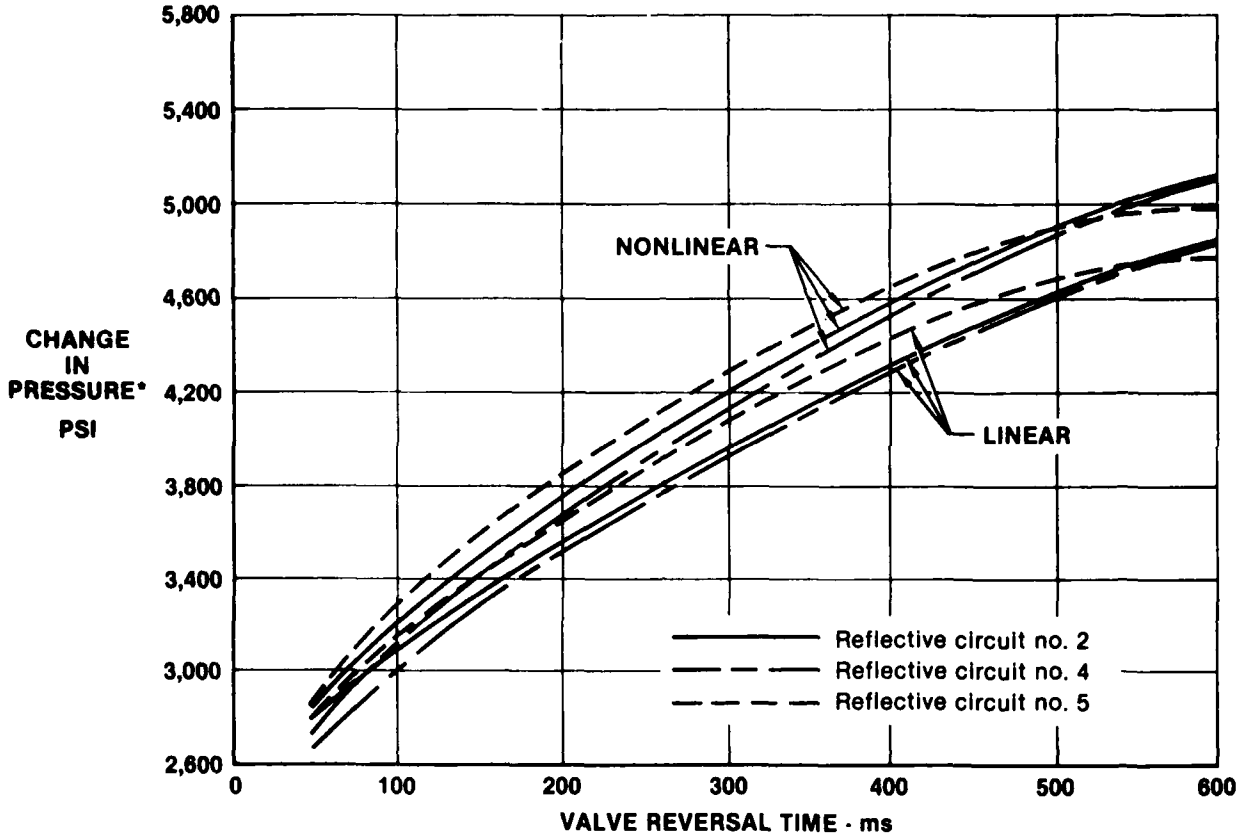

*Equals peak pressure less initial pressure

GP23-0560-82

Figure 154.
PRESSURE RISE vs VALVE REVERSAL TIME
Appendix Line Effect on Transients

The difference between linear and nonlinear valve generated pressure peaks is quite similar to the non-reflective circuit.

The primary difference appears to be due to changing energy sources. The high response pump circuit is 50 to 100 psi higher below 400 ms. For valve operating times higher than 400 milliseconds, the peak is attenuated because the pump is absorbing part of the energy. For the slower valve times this attenuating wave has time to get back to the valve during closure.

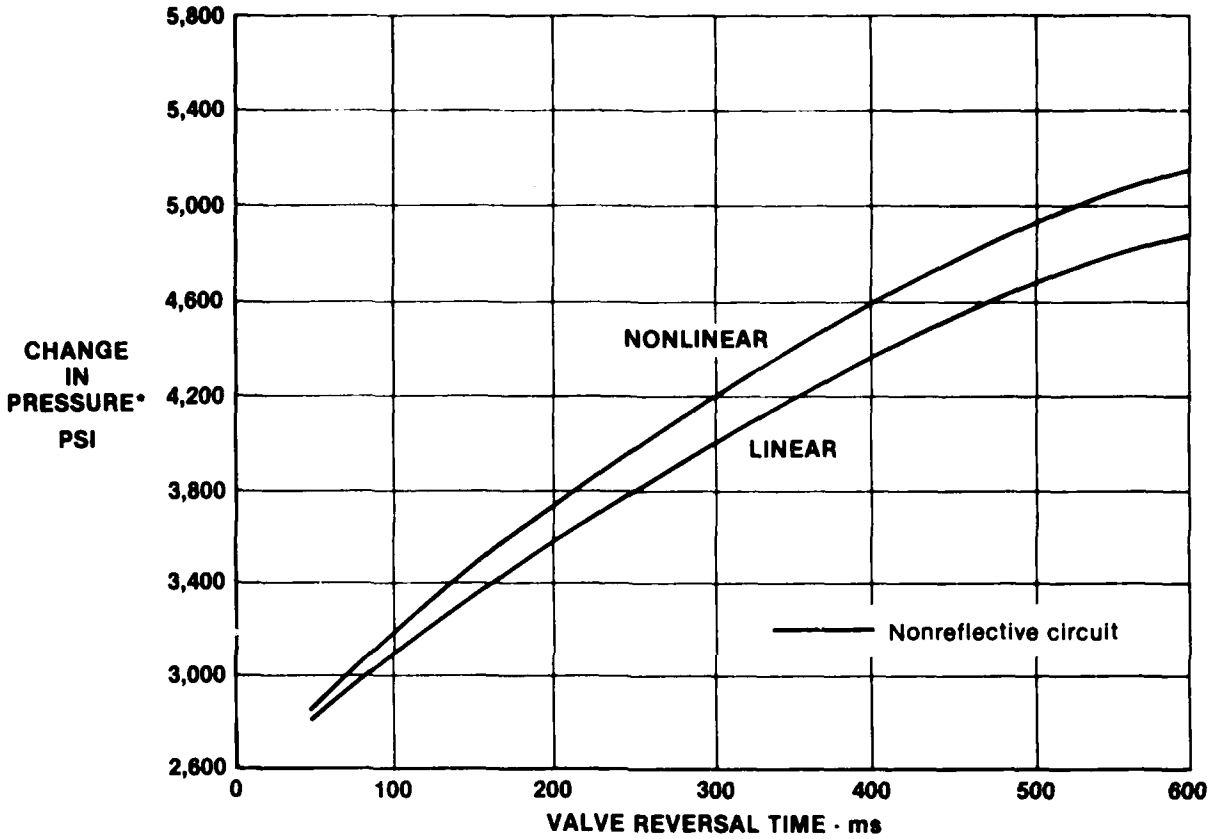

*Equals peak pressure less initial pressure

Figure 153.

GP23-0550-81

PRESSURE RISE vs VALVE REVERSAL TIME

Basic System Transients

The nonlinear valve pressure rise is 200 to 300 psi higher than the linear valve in the 300 to 600 millisecond valve reversal time range. The non-linear valve is approximately 6% (250 psi) higher than the linear valve for the 400 millisecond valve reversal. Figure 154 presents the results of the analysis done on reflective circuits 2, 4, and 5 which deal with the dead ended branch line (appendix line) reflection characteristics. Circuits 2 and 4 use a constant pressure source. Circuit No. 5 uses a high response pump. Circuit No. 2 locates the reflection point 844 inches upstream. The reflection point is located 17 inches upstream in circuits 4 and 5. When these results are compared to the non-reflective circuit, very little change in magnitude is noted. This type reflection appears to have minor effects even when located close to the valve. In fact the predictions indicate the peaks are slightly lower when the appendix line is located close to the valve.

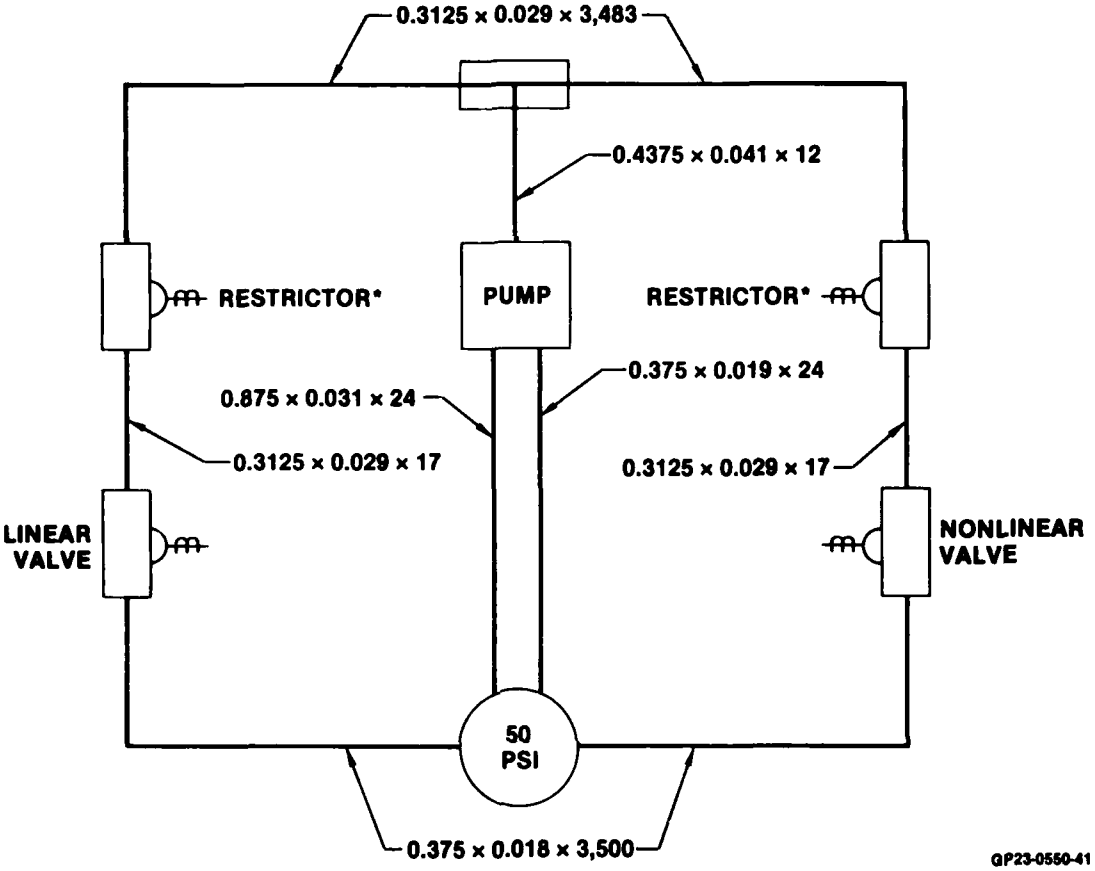

Note: Dimensions are in inches

*Restrictors modeled as fully open type 21 valve

Figure 152.
LINEAR AND NONLINEAR VALVE WATER HAMMER CHARACTERISTICS IN A REFLECTIVE CIRCUIT NO. 6

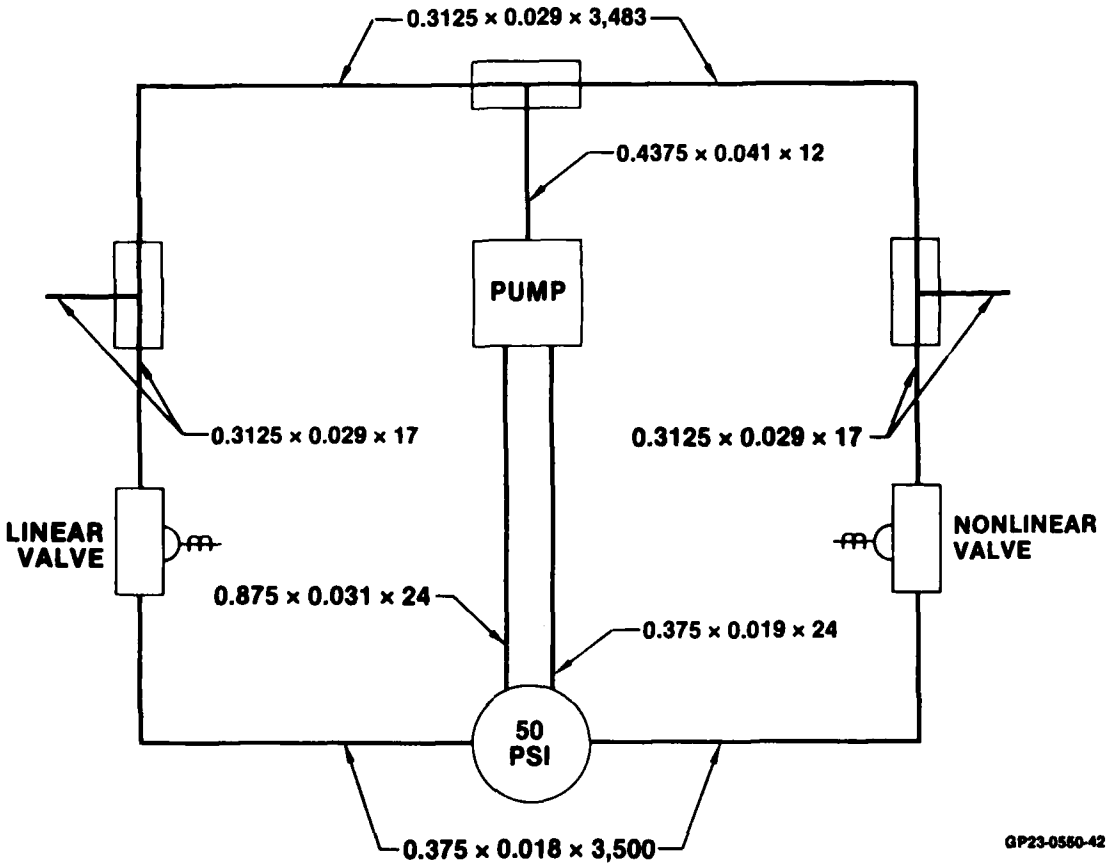

Figure 151.
LINEAR AND NONLINEAR VALVE WATER HAMMER CHARACTERISTICS IN A REFLECTIVE CIRCUIT NO. 5

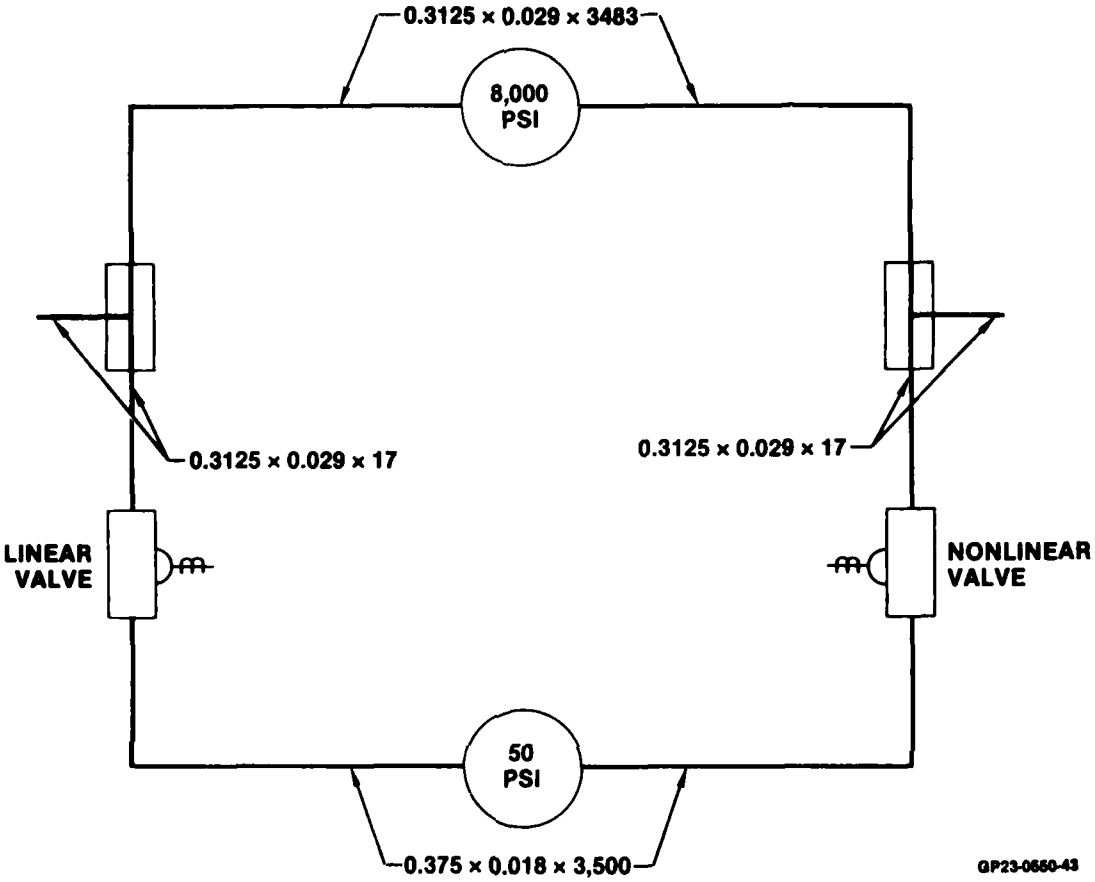

Figure 150.
LINEAR AND NONLINEAR VALVE WATER HAMMER CHARACTERISTICS IN A REFLECTIVE CIRCUIT NO. 4

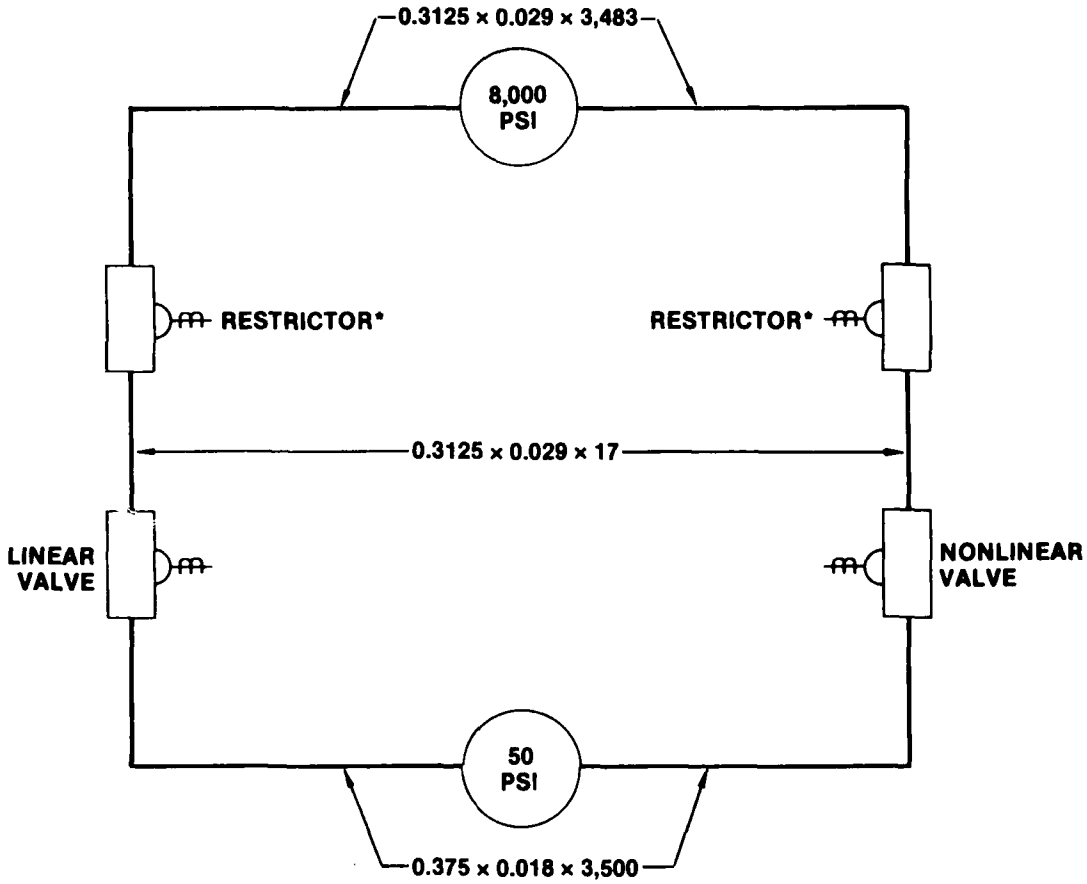

*Restrictors modeled as fully open Type 21 valve

GP23-0660-44

Figure 149.
LINEAR AND NONLINEAR VALVE WATER HAMMER CHARACTERISTICS IN A REFLECTIVE CIRCUIT NO. 3

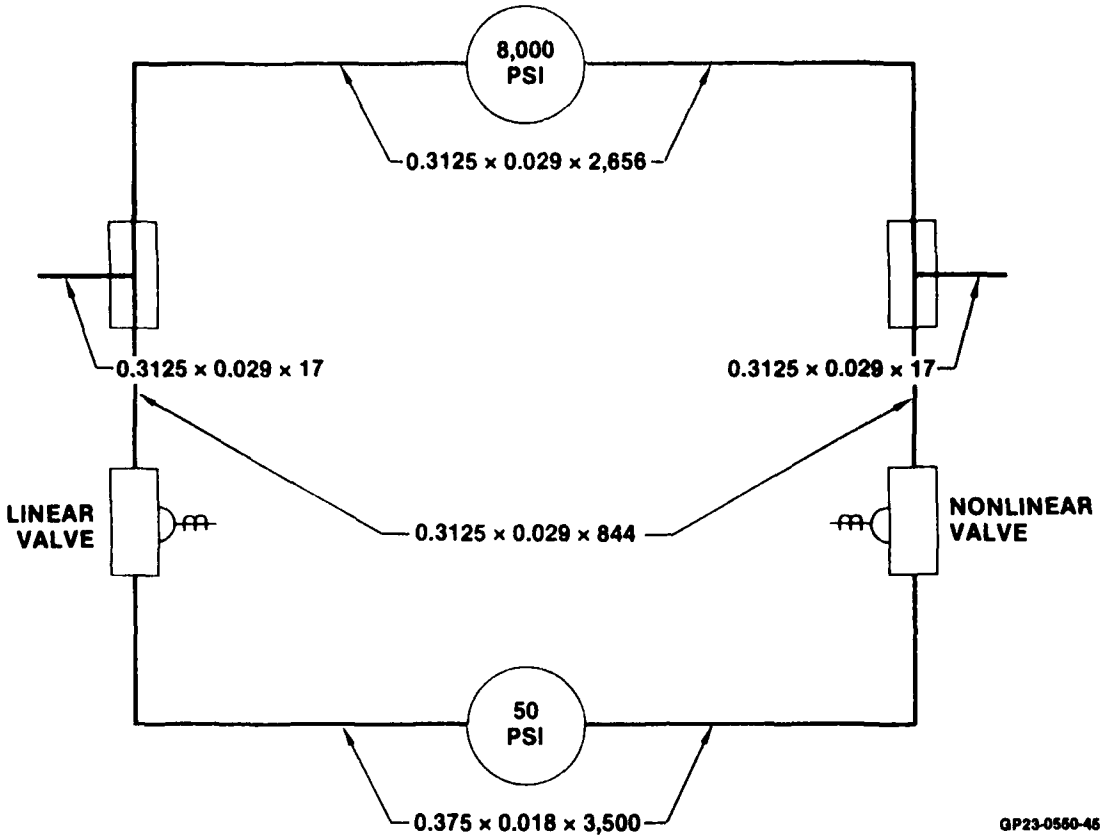

Figure 148.
LINEAR AND NONLINEAR VALVE WATER HAMMER CHARACTERISTICS
IN A REFLECTIVE CIRCUIT NO.2

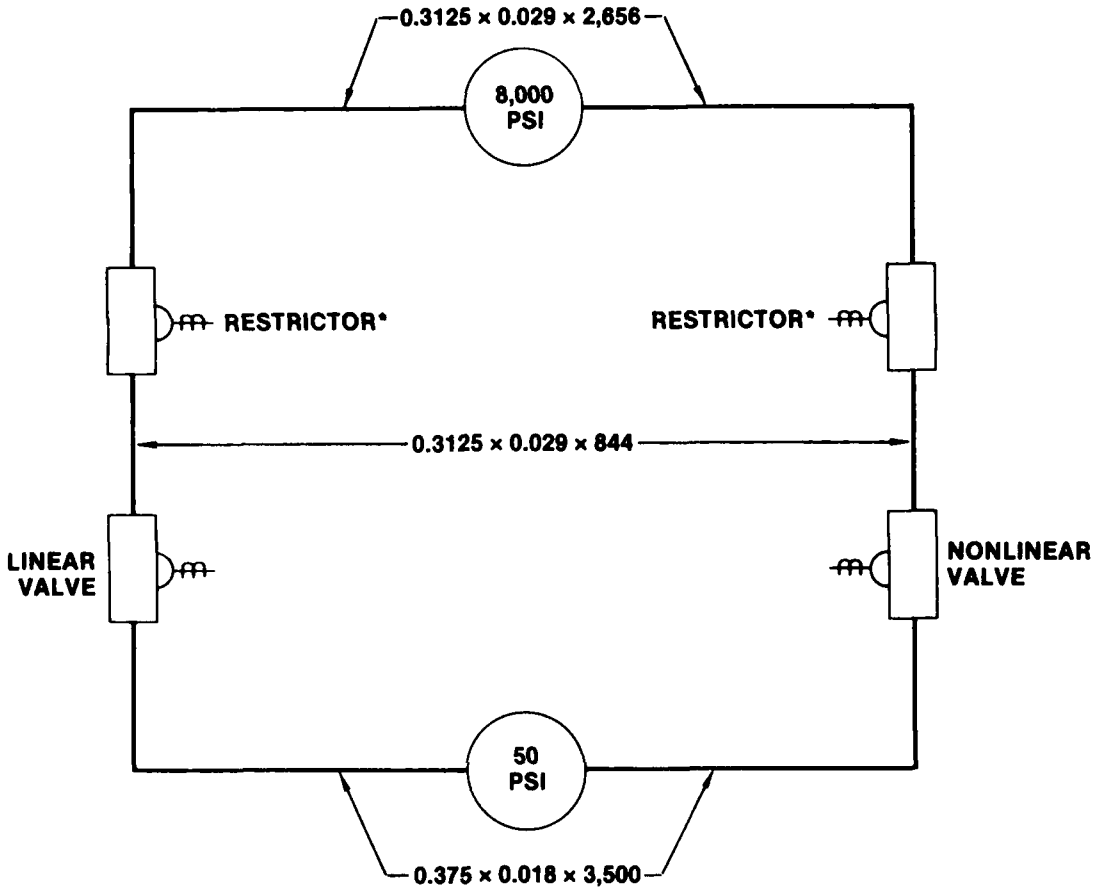

*Restrictors modeled as fully open Type 21 valve

Figure 147.
LINEAR AND NONLINEAR VALVE WATER HAMMER CHARACTERISTICS IN A REFLECTIVE CIRCUIT NO. 1

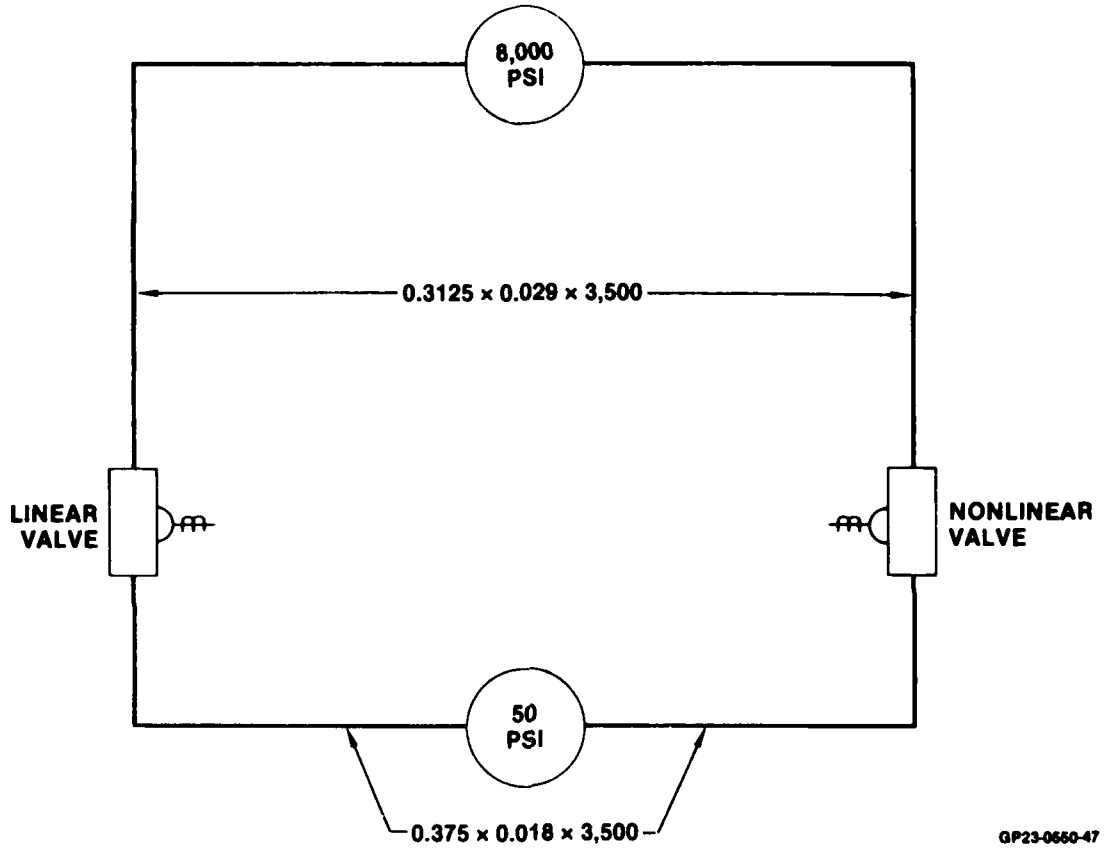

Figure 146.
LINEAR AND NONLINEAR VALVE WATER HAMMER CHARACTERISTICS
IN A NONREFLECTIVE CIRCUIT

2.3.2.7.3 "Academic" Model - A HYTRAN model was created to compare the pressure rise vs valve reversal time characteristics between linear and non-linear control valves. These models varied from systems containing no reflective points ahead of the valves to systems with combinations of tees with dead ended lines and restrictors at different points which caused pressure reflections back towards the valve. Initial simulations used a constant 8000 psi pressure source. Later simulations used a high response pump model to evaluate any attenuation benefits that might accrue from the pump's energy absorption characteristics.

The system simulations incorporated odd/even line sizes in the pressure and return lines respectively. Valve reversal times were varied from 50 to 600 milliseconds. One half that time is required to go from valve full open to valve closed, the other half is used to move from valve closed to full open in the opposite direction. The valve speed was the same throughout the stroke. The time for the pressure wave to travel up to the pump or pressure source and return to the valve was about 200 milliseconds. CTFE fluid characteristics were used in the analyses throughout. Figures 146 through 152 present the seven variations which were evaluated. Figure 146 describes the non-reflective circuit. No discontinuities such as branches or line size changes were modeled which could reflect energy. Figure 147 describes a reflective circuit wherein restrictors are located 844 inches upstream of each valve. This change in fluid passage cross section provides an energy reflection point. For all simulations two legs are modeled, one with a linear valve, the other with a non-linear valve. The valve non-linearity is the same as that described in Section 2.2.1.3.4. Figure 148 describes a circuit identical to reflective circuit no. 1 except that the restrictors are replaced with a dead ended branch. The passage cross section does not change. Figure 149 describes reflective circuit No. 3. In this circuit the restrictors are moved from a location 844 inches upstream to a location only 17 inches upstream of the control valves. Figure 150 describes reflective circuit No. 4 in which the dead ended branch is located 17 inches upstream of the valve.

It should be noted that the constant pressure source is used in all circuits through No. 4. The high response pump model is used in reflective circuits Nos. 5 and 6 which are described in Figures 151 and 152. Reflective circuit No. 5 locates dead ended branches 17 inches upstream of the control valves. Reflective circuit No. 6 locates restrictors 17 inches upstream of the control valves.

The results of exercising the seven simulations are presented in Figures 153, 154, and 155. The pressure rise vs valve reversal time characteristic for the non-reflective circuit is presented in Figure 153.

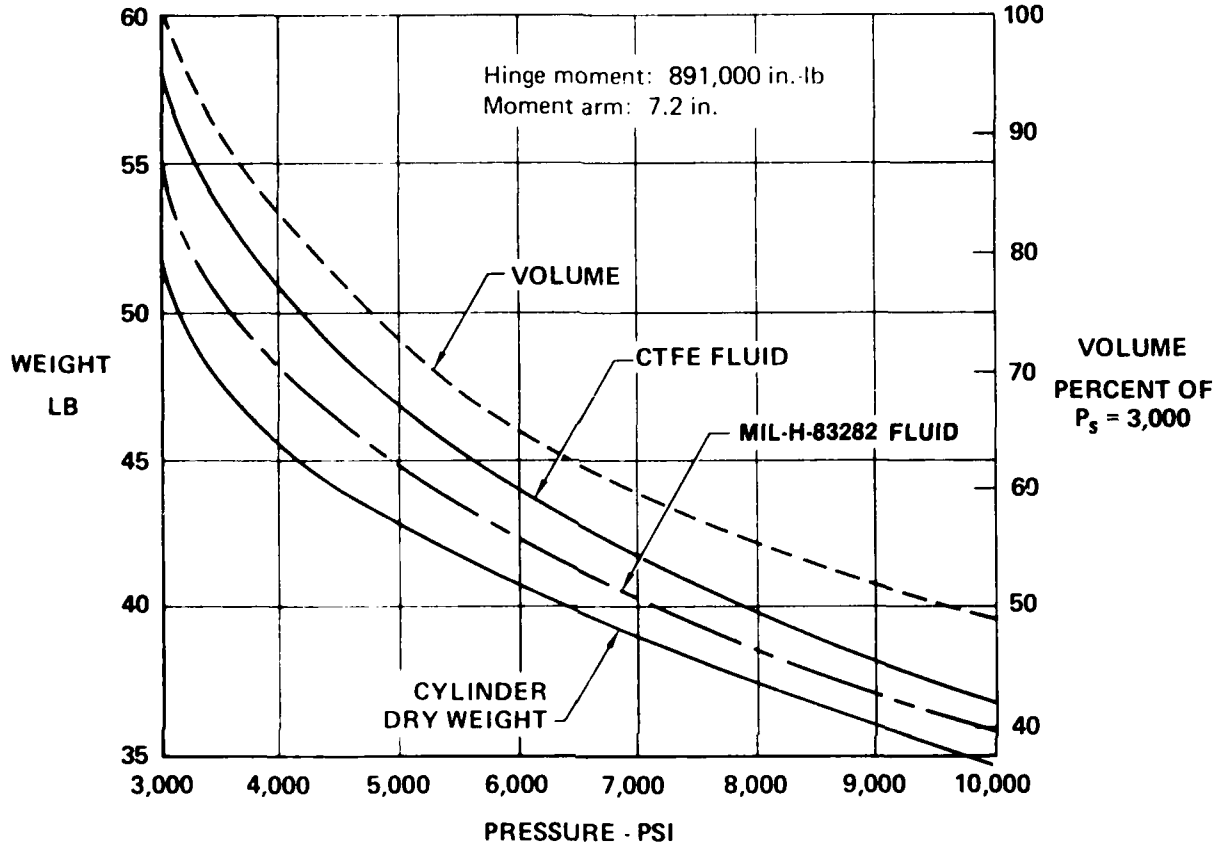

Figure 159.
ADVANCED DESIGN FIGHTER
FLAP ACTUATOR
Tandem

GP23-0550-136

2.3.2.10 Force Motor Operated Valve Manifold - The force motor concepts eliminates the need for electro-hydraulic valves (EHV's), failure detectors, and the associated manifold valves. Compare the complexity of Figure 160 to Figure 161. The F-18 flap servo actuator manifold is representative of the future trends in active flight control actuators employing the control by wire approach (LVDT included), and was used as an example of the redesign sequence necessary for force motors.

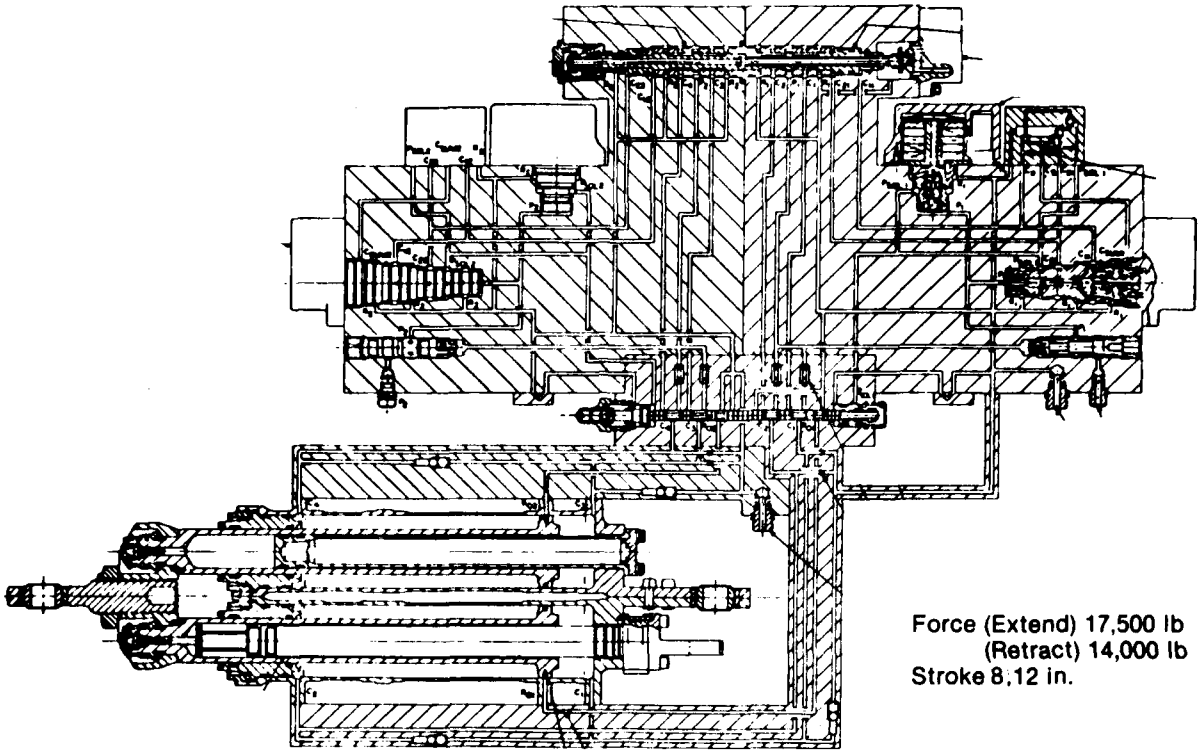

Figure 160.
F/A-18 FLAP SERVO ACTUATOR

GP23-0550-168

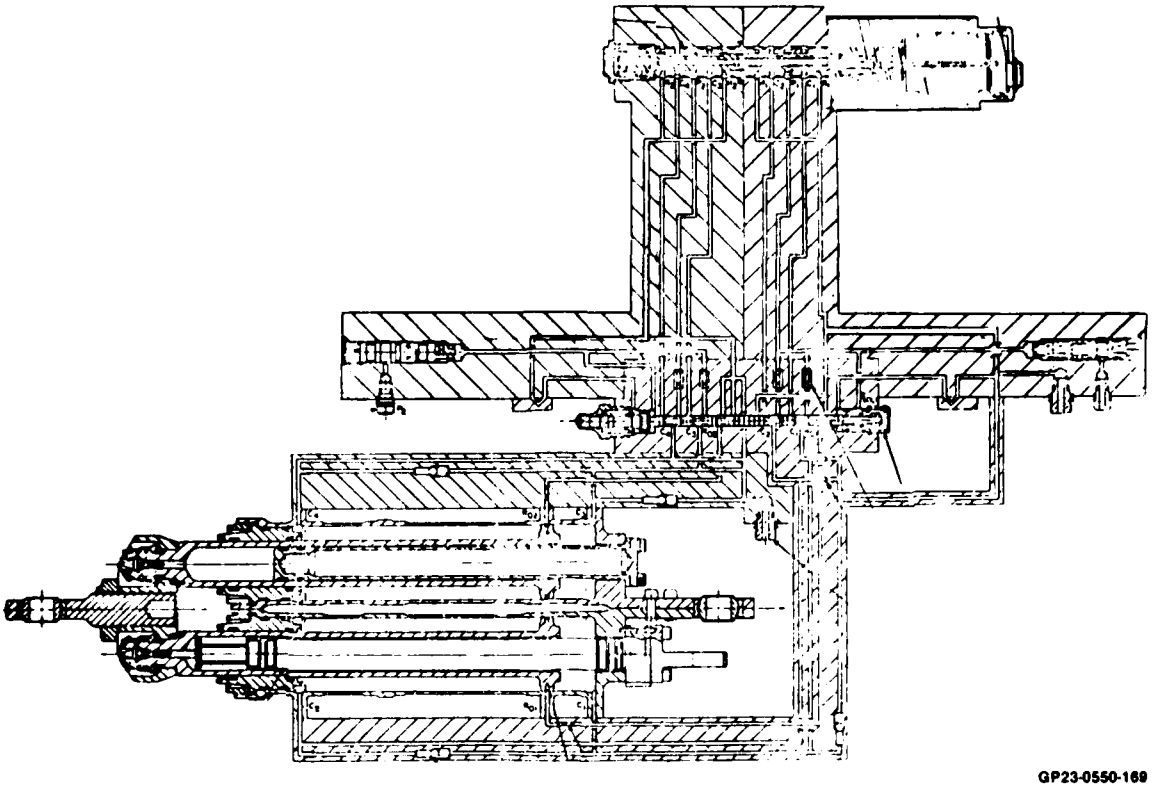

Figure 161.
F/A-18 FLAP SERVO ACTUATOR FORCE MOTOR CONCEPT

The redesigned F-18 flap servo actuator package used the same end attachments and parallel cylinder design as the existing unit. The piston rods and rod ends also remained unchanged. However, decreasing the size of the pistons and cylinders, using higher pressure, and retaining the same axial spacing because of the end attachment increased the moment loads for the offset cylinders.

A study of manifold pressure sizing indicated that aluminum was not suitable for pressures much beyond 3000 psi. For this reason, titanium was chosen and 3000 psi titanium manifold designs were created.

Manifold passages were sized by fluid viscosity and density so the use of CTFE fluid requires a larger passage size for equal head loss. However, the higher operating pressures reduced flow requirements. Double passage wall thickness was determined as if each passage were a pressure vessel with the added requirements of a .062 inch minimum passage diameter and .090 minimum wall thickness (for machining considerations). Dead volume was calculated for the existing unit as the total volume less the "pipe" volume, and the same percentage was used for the redesigned unit.

A force motor weight of 1.5 pounds was assumed in all applications.

Figure 162 shows the weight effect of force motor versus EHV usage on servoactuators for various system pressures. While servoactuator dry weight tended to increase with increasing pressure, the "wet" (dry plus fluid content) weight decreased to a minimum around 5500 psi, before starting the climb with pressure.

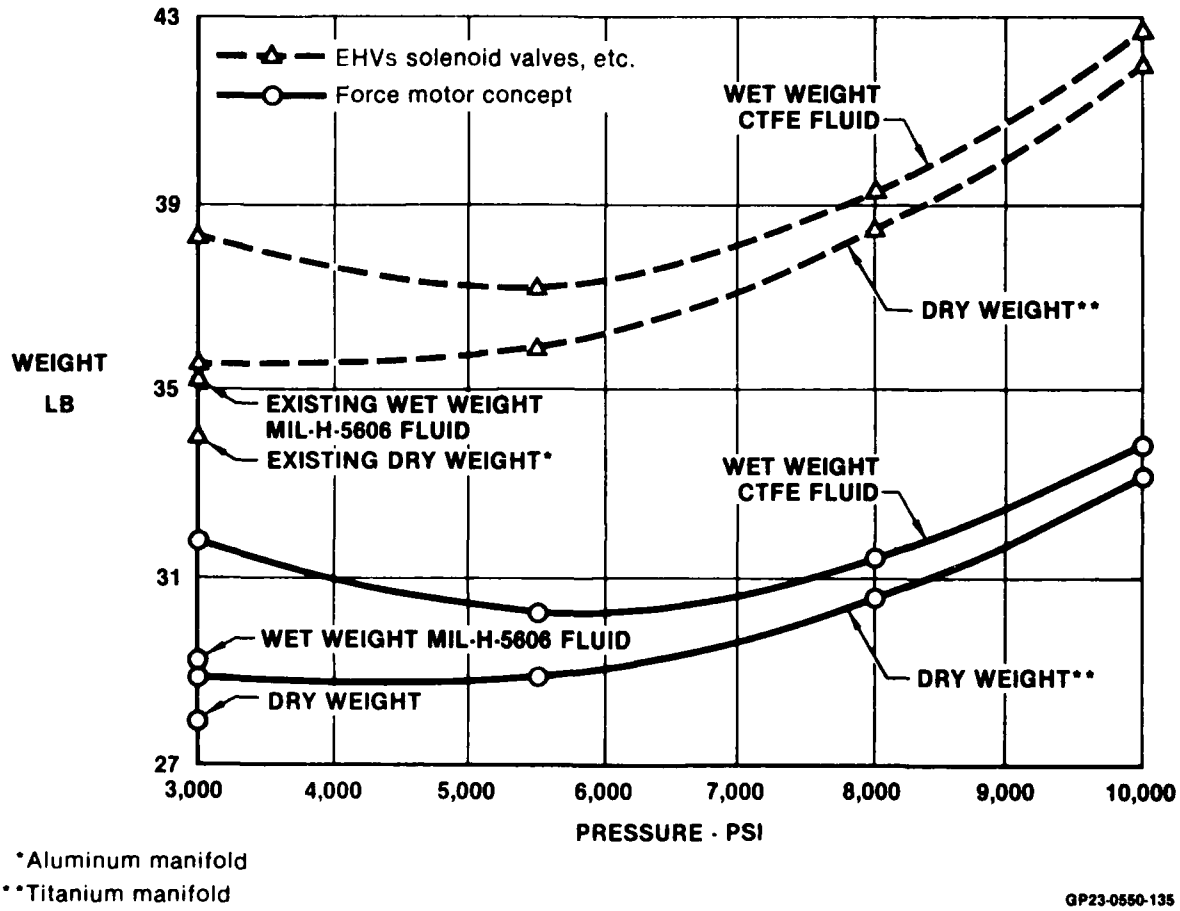

Figure 162.
F/A-18 FLAP SERVO ACTUATOR WEIGHT vs PRESSURE

The effect of force motors on various F-15 hydraulic components is compared in Figure 163.

	3,000 PSI (LB)	8,000 PSI (LB)	8,000 PSI W/FORCE MOTOR (LB)
STABILATOR ASSEMBLY	121.80	119.11	99.43
AILERON ASSEMBLY	48.00	43.92	43.20
SPEEDBRAKE VALVE	4.10		4.42
MAIN LANDING GEAR	21.60		20.90
NOSE LANDING GEAR	1.30		1.90
NOSE GEAR STEERING	0.90		2.01
AERIAL REFUELING RECEPTACLE	3.40		3.79
ARRESTING HOOK	1.10		2.10
PRIMARY HEAT EXCHANGER	1.30		1.90
TOTAL	203.50		179.65

Aileron and Stabilator assemblies without Force Motor for 8,000 PSI represented significant weight savings and were listed separately for comparison.

Weight estimates are per aircraft.

GP23-0550-134

Figure 163.
F-15 HYDRAULIC COMPONENTS
Force Motor Valve Weight at 8,000 Psi

2.3.3 Concepts Evaluation Summary

2.3.3.1 Weight Savings Concepts

2.3.3.1.1 Higher System Pressure - The weight saving effects of higher system pressure were confirmed by the initial weight vs pressure trend study. The results for the F-15 and KC-10A are shown in Figures 164 and 165. In both aircraft, the weight reduction trend indicates the optimum pressure is above 10,000 psi. The higher weight of the CTFE fluid and resultant weight savings in eliminating a significant portion as the pressure increases has pushed the minimum weight valley well above 10,000 psi for the larger KC-10A aircraft which contains more fluid. The minimum-weight pressure for each aircraft is estimated as:

- F-15, between 11,000 and 12,000 psi
- KC-10A, approximately 13,000 psi

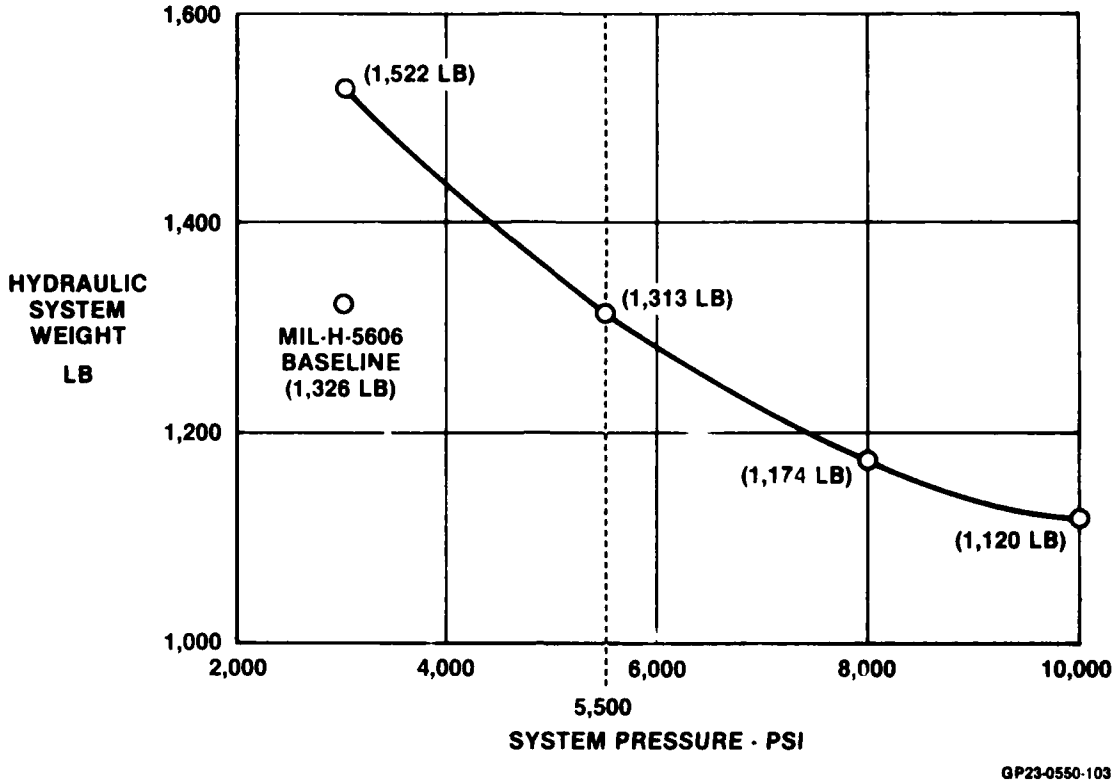

Figure 164.
F-15 HYDRAULIC SYSTEM WEIGHT vs PRESSURE
CTFE Fluid

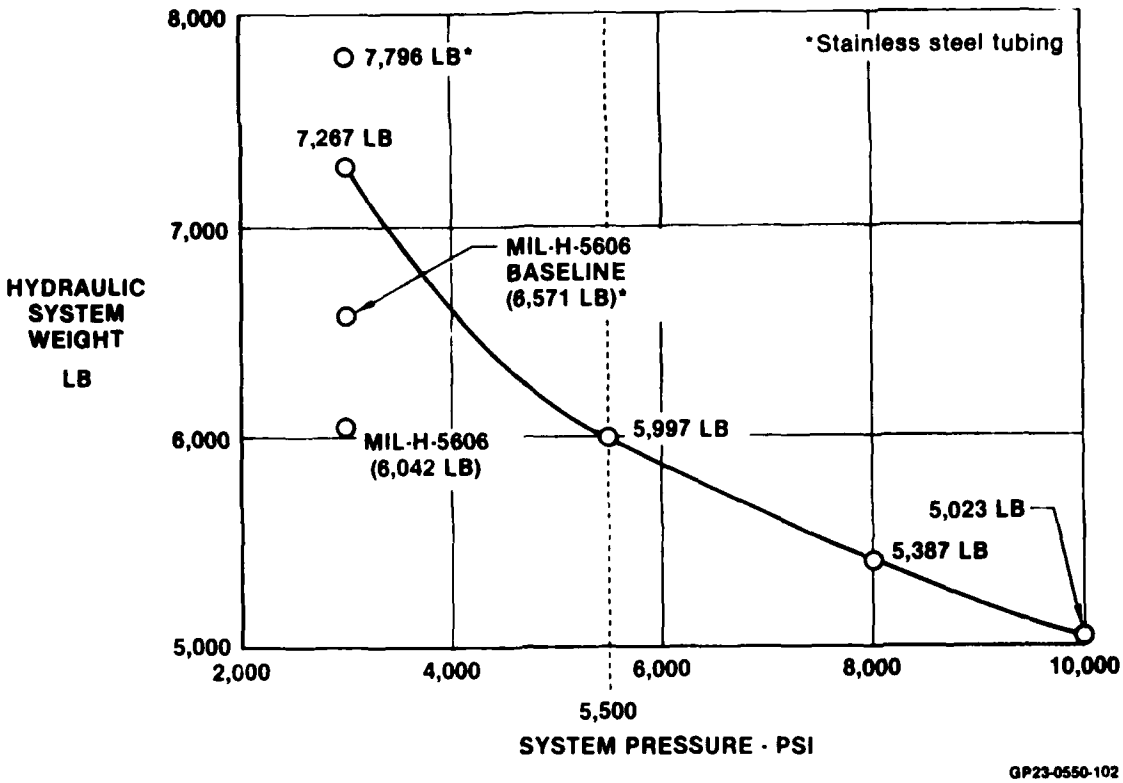

Figure 165.
KC-10A HYDRAULIC SYSTEM WEIGHT vs PRESSURE
CTFE Fluid Titanium Tubing

2.3.3.1.2 Force Motor - Force motors have much potential for weight savings through simplification of manifolds and elimination of significant energy losses in the hydraulic systems. Figure 166 presents the results of an F-18 study. The 93 lb weight savings is approximately 8% of the total aircraft hydraulic system weight.

The F-15 and KC-10A, however, are not necessarily representative of future aircraft and flight control systems. The future aircraft will probably be pure control-by-wire and fail operate/fail safe in the critical control surfaces.

By contrast, both the F-15 and KC-10A are fail soft. The F-15 system is a control augmentation system (CAS). The KC-10A system is an autopilot type system with limited authority. It is estimated that 60 to 90 lb could be removed from the F-15 if it were a pure control-by-wire aircraft.

ITEM	STABILATOR ACTUATOR	TOTAL AIRCRAFT (ALL FLIGHT CONTROLS)
• WEIGHT SAVINGS	25%/15 LB	93 LB
• HYDRAULIC SYSTEM HEAT REJECTION REDUCTION	40 BTU/MIN	500 BTU/MIN
• ELECTRIC WIRE REDUCTION	64%/56 WIRES ELIM	312 WIRES ELIM (12,500 FT)
• PRODUCTION COST REDUCTION	> $11,000.00	> $55,000.00 (HYDRAULIC CHANGES ONLY)
• ELECTRICAL POWER QUIESCENT ENERGY REDUCTION	83%	83%/250 WATTS

GP23-0550-101

Figure 166.
BENEFITS - DIRECT VALVE DRIVER APPLIED TO A CURRENT AIRCRAFT STABILATOR
Preliminary Conclusion

2.3.3.1.3 Pressure Intensifiers - The pressure intensifier has the potential to significantly reduce the amount of fluid in the aircraft. With the use of CTFE fluid any significant reduction in the fluid volume needed will result in very desirable weight reductions.

The pressure intensifier is used as follows. The central system hinge moment capability is set at a percentage of the maximum required, say 2/3. The peak output horsepower is consequently reduced to 2/3 since the product of the rate and hinge moments requirements is horsepower. The pressure intensifier is then sized to 1-1/2 times pressure output at maximum central system pressure.

During null conditions and at rates up to its design limit, the intensifier will be active as required to satisfy the performance while maintaining the intensified pressure. The higher pressure will be beneficial where stiffness is a concern. Figure 167 presents composite performance (rate vs hinge moment) for conventional and pressure intensifier (P.I.) systems.

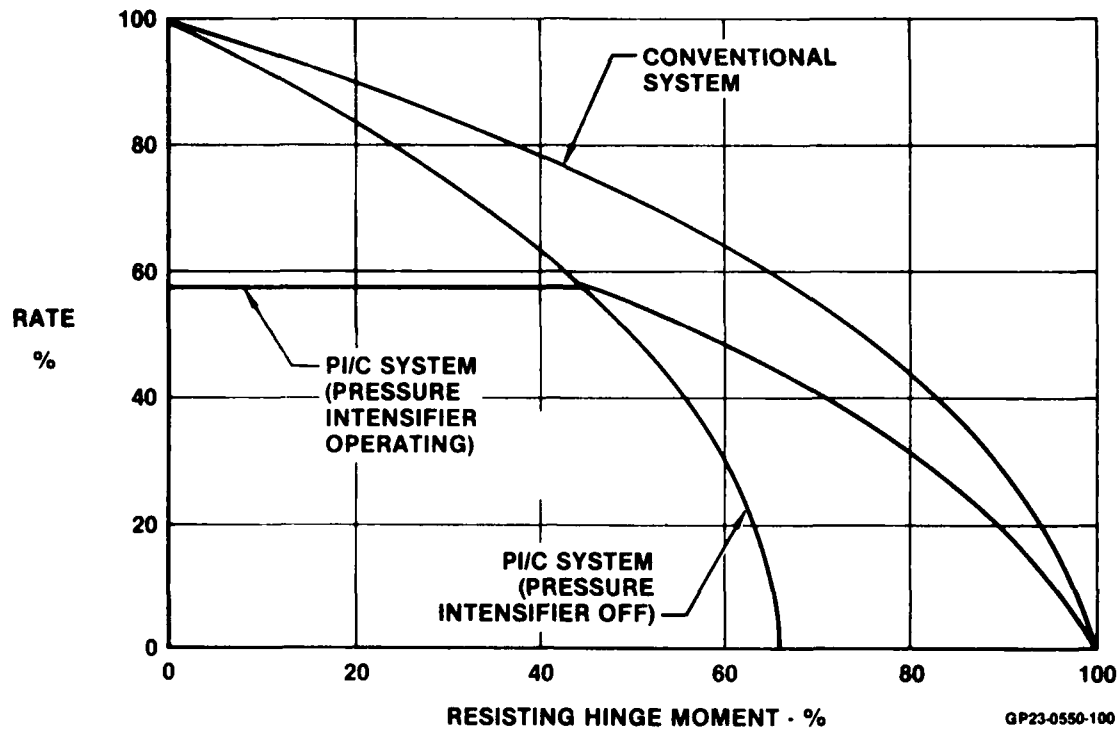

Figure 167.
PERFORMANCE CHARACTERISTICS CONVENTIONAL vs PRESSURE INTENSIFIER CENTRAL SYSTEM (PI/C) ACTUATION SYSTEMS

A one-third reduction in peak power requirements results in an approximately like reduction in fluid weight. The candidate aircraft fluid weight savings would be:

F-15 ---------- 48.7 LB
KC-10A --------- 302.7 LB

The actuator which must now be designed for 12,000 vs 8000 will not change in weight. Since the flow is down by one third for the same pressure (8000 psi), significant weight savings in the distribution system and central system components will accrue. The intensifier added weight will partially offset the defined weight savings.

Preliminary study results indicate the following savings:

F-15 ---------- 110 LB
KC-10A --------- 520 LB

Effort is continuing to verify the preliminary study results. The other key to the practicality of pressure intensifiers is the actual aircraft control rate-hinge moment requirement. The F-18 requirements are being studied to see if they fit under the pressure intensifier/central system performance curve.

The pressure intensifier may be used either centrally (one unit) or integrated into each major subsystem (several units).

Figure 168 presents a rate vs resisting hinge moment performance for a 1 1/2:1 pressure intensifier/central system approach. The pressure intensifier is one unit located close to the central system. While the system peak power requirements are reduced by one third, the peak power that can be transmitted to the subsystem is reduced by only 15% as shown.

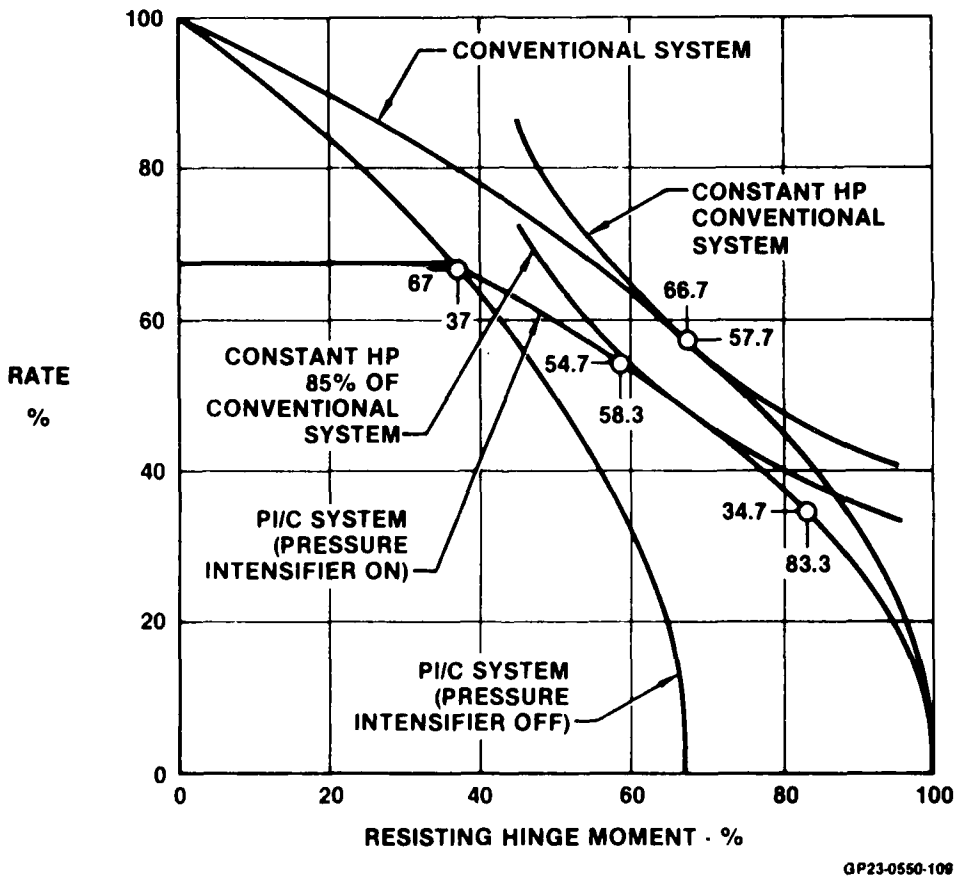

Figure 168.
PERFORMANCE CHARACTERISTICS CONVENTIONAL vs PRESSURE INTENSIFIERS - CENTRAL SYSTEM (PI/C) ACTUATION SYSTEMS
(PI Output Press 1½ Times Central System)

Figure 169 presents rate vs resisting hinge moment for a 2:1 pressure intensifier/central system approach. The system peak power requirements are reduced by one half. The peak power that may be transmitted to the subsystem is reduced by 38% as shown.

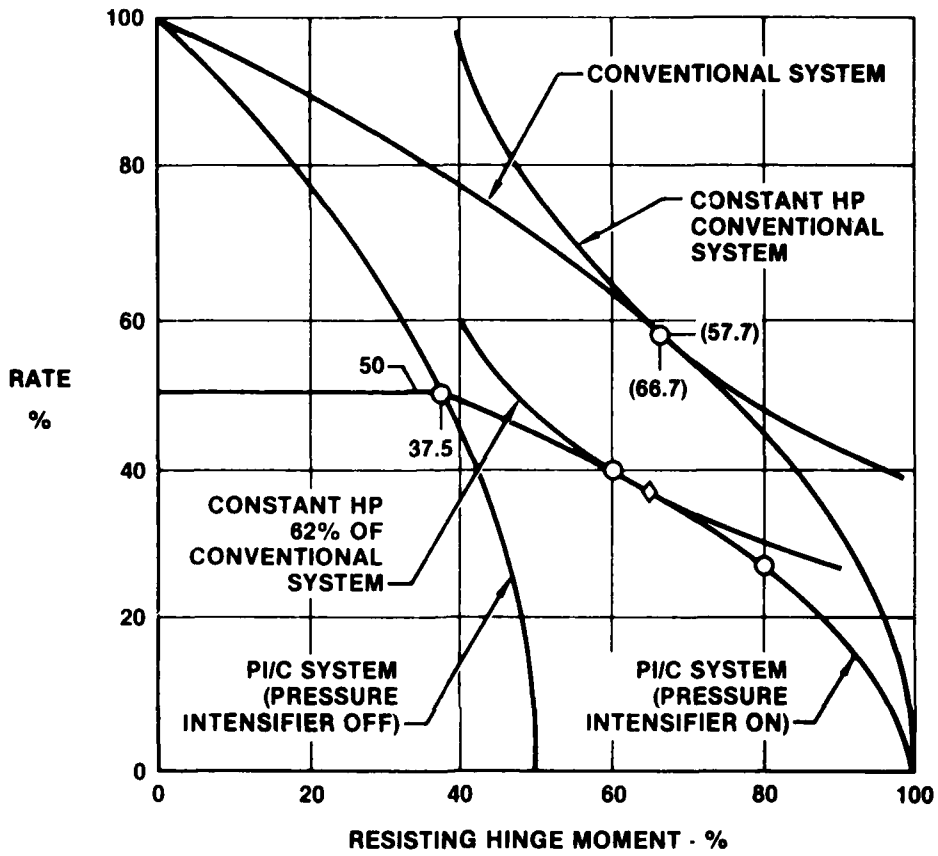

GP23-0550-107

Figure 169.
PERFORMANCE CHARACTERISTICS CONVENTIONAL vs PRESSURE INTENSIFIER - CENTRAL SYSTEM (PI/C) ACTUATION SYSTEMS
(PI Output Press 2 Times Central System)

The control approaches and various failure modes are important and must be acceptable. Since the central system and the intensifier operate in parallel, a pressure intensifier shut down will not interfere with continuing function nor will the landing performance be adversely affected. Figure 170 presents the schematic and control characteristics being evaluated.

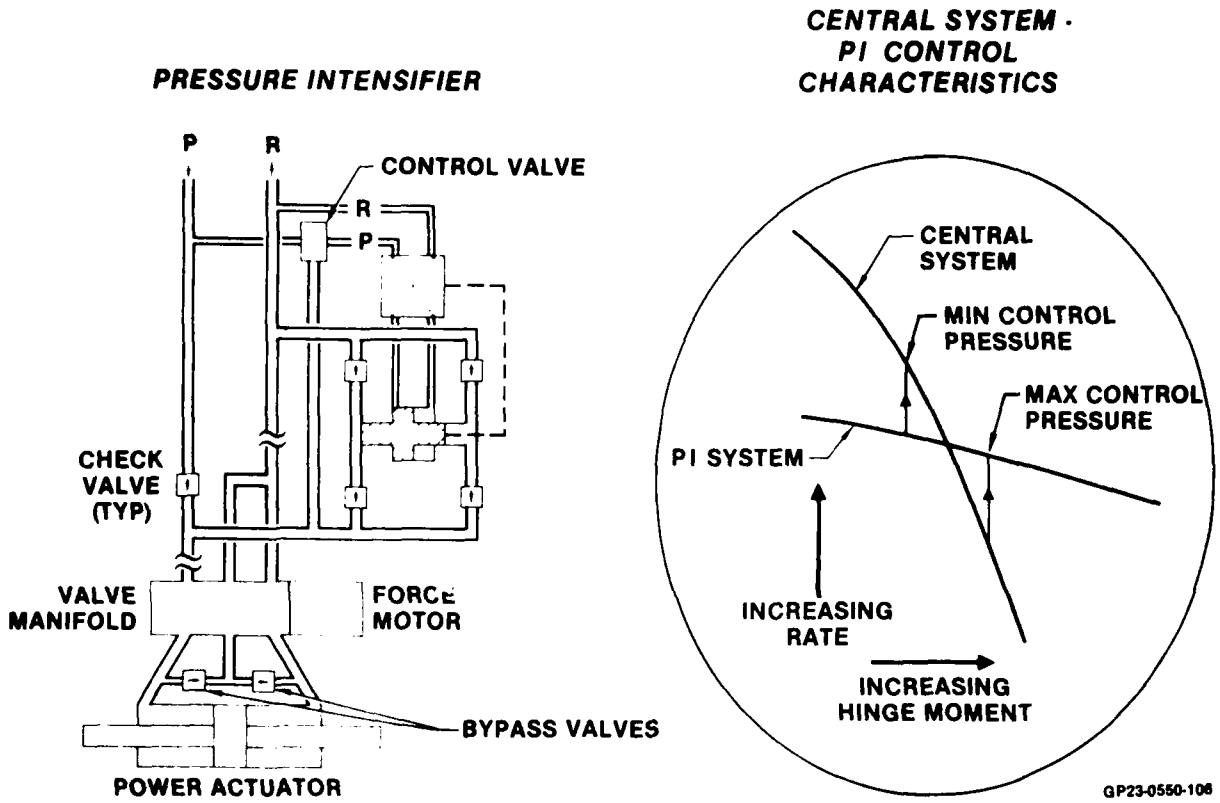

Figure 170.
PRESSURE INTENSIFIER/CENTRAL SYSTEM SCHEMATIC AND CONTROL CHARACTERISTICS

The pressure intensifier control valve is sensitive to pressures. For pressures above the maximum control pressure shown, it switches pressure-flow to the intensifier which then meets all subsystem demands and static null leakage requirements. Maintaining higher pressures at null provides the associated higher bulk modulus for meeting stiffness requirements. For motion in the assisting load direction or to lower resisting hinge moments the control valve stops pressure-flow to the intensifier, as the pressure reduces to and below the minimum control pressure. The central system then meets the subsystem demand.

There are three approaches being considered in meeting the pressure intensifier requirement.

- o SUNDSTRAND - Rotating barrel combination motor pump
- o MCAIR (Leonardo da Vinci) - Double acting oscillating piston pump/check valve arrangement
- o ABEX - Oscillating multiple piston motor pump

Figure 171 and 172 present the Sundstrand unit envelope and schematic. Figure 173 presents a cross section/envelope of the MCAIR unit.

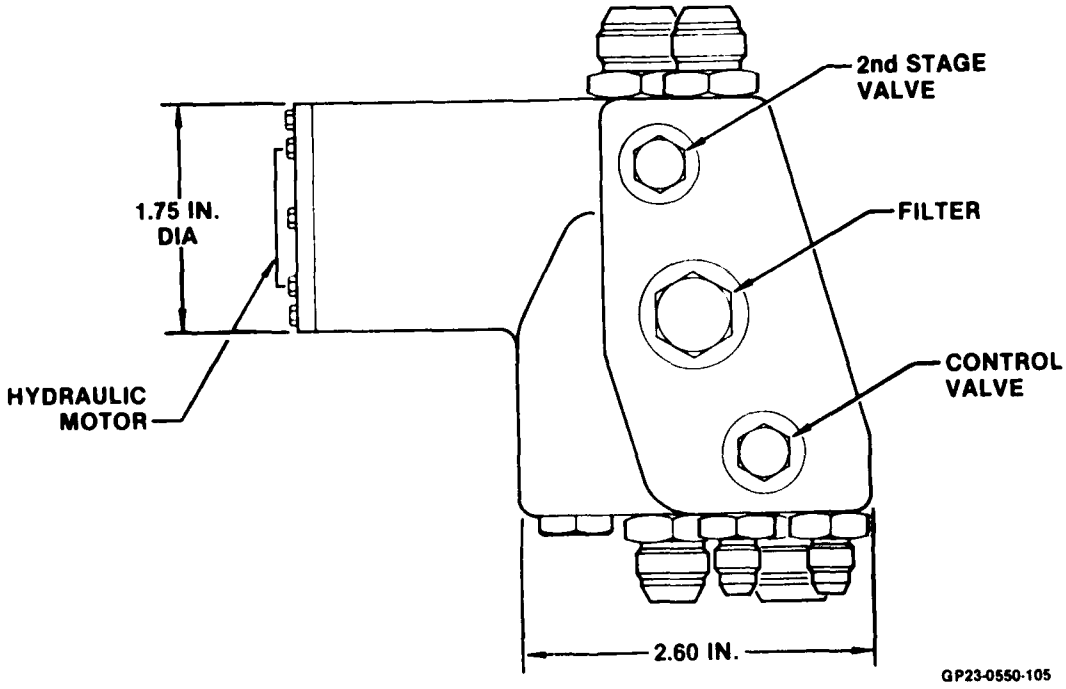

Figure 171.
SUNDSTRAND PI ENVELOPE

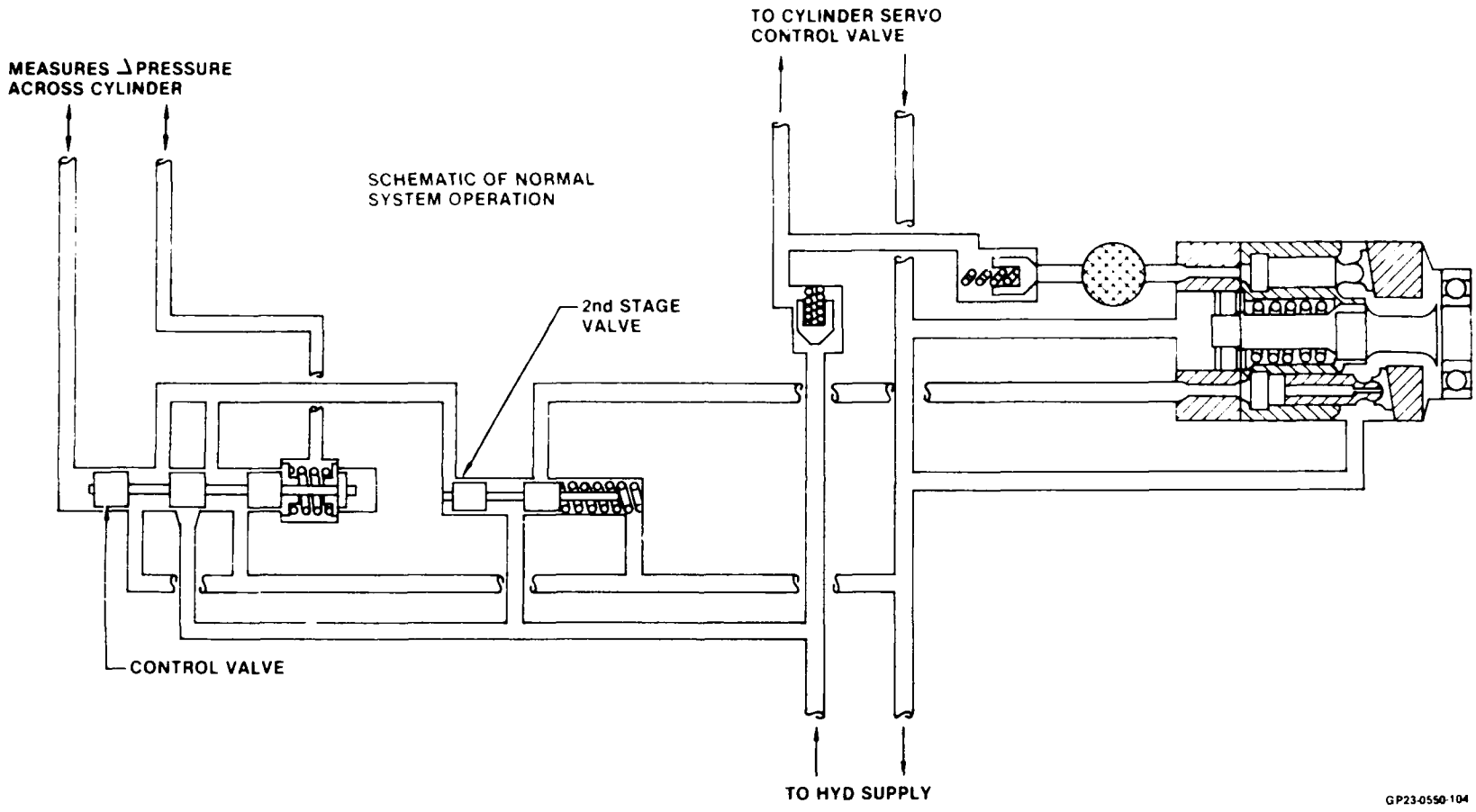

Figure 172.
SUNDSTRAND PI SCHEMATIC

AD-A157 618 FLIGHT WORTHINESS OF FIRE RESISTANT HYDRAULIC SYSTEMS 3/4
VOLUME 1(U) MCDONNELL AIRCRAFT CO ST LOUIS MO
J R JEFFERY ET AL. DEC 84 AFWAL-TR-84-2085
UNCLASSIFIED F33615-80-C-2074 F/G 13/7 NL

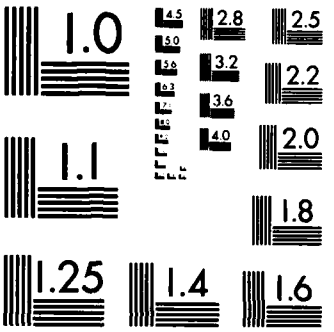

MICROCOPY RESOLUTION TEST CHART
NATIONAL BUREAU OF STANDARDS-1963-A

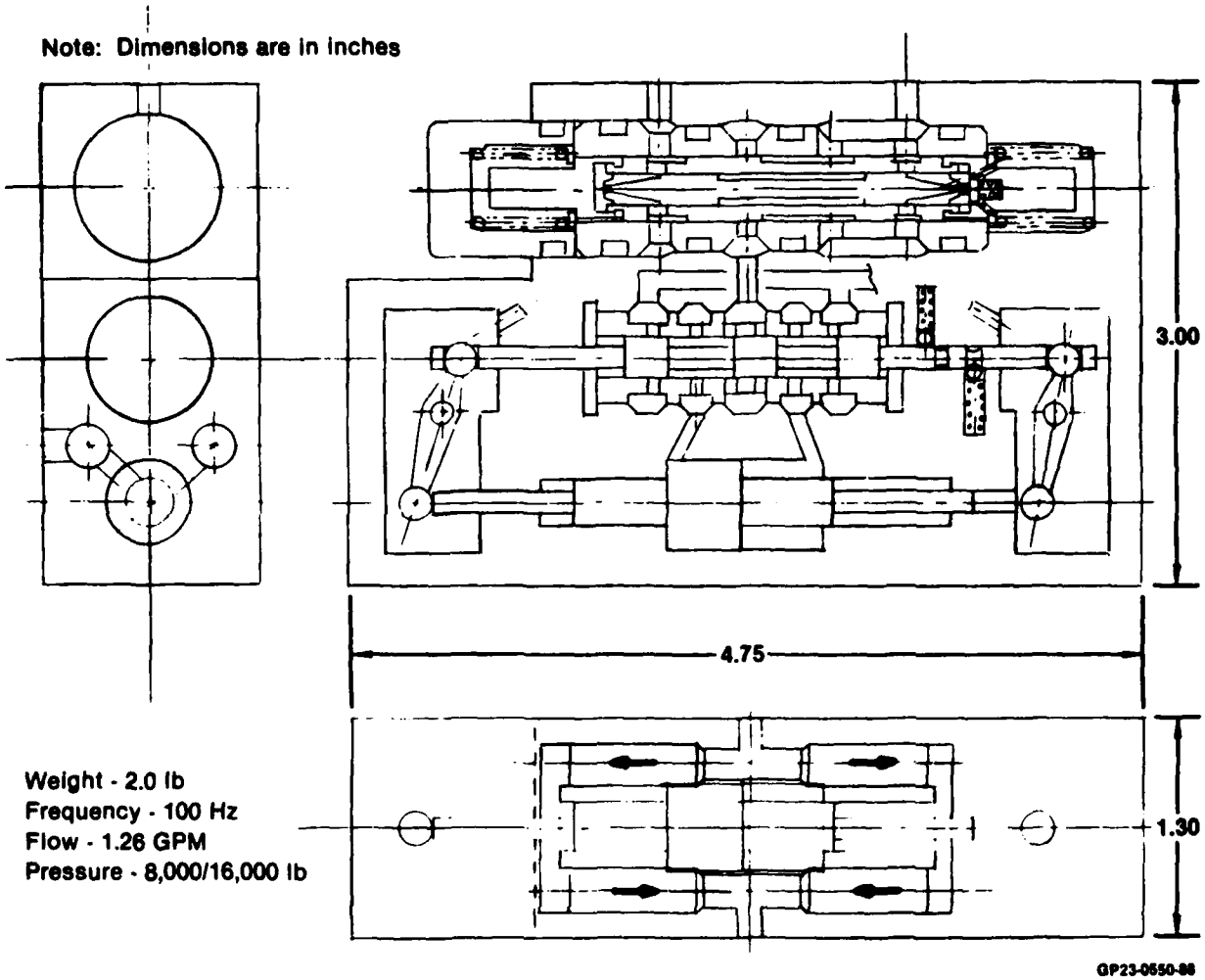

Figure 173.
MCAIR PRESSURE INTENSIFIER

2.3.3.1.4 NonLinear Control Valve - The use of the nonlinear control valve was expected to reduce distribution system and fluid weight. This seemed reasonable since, at full flow, more pressure drop is being assigned to line loss than for more conventional systems.

A portion of one of the KC-10A systems was used to evaluate the nonlinear valve weight impact. The result is as follows:

SYSTEM CONFIGURATION	DRY WEIGHT
Conventional	105.5 LB
NonLinear Valve	101.8 LB
	3.7 LB

The dry weight savings shown is approximately 3%. Approximately the same weight is saved due to reduction in fluid volume.

2.3.3.1.5 Odd-Even Distribution System - The odd-even approach is a means of limiting and controlling the use of thick wall tubing to the pressure side of the system only. The thick wall high pressure portion of the system would use odd dash number tubing and fittings such as -3 (3/16 dia), -5 (5/16 dia), etc. The return side thin wall portion of the system would use even dash number tubing and fittings such as -4 (1/4 dia), -6 (3/8 dia), etc.

The benefits of this approach were evaluated on a KC-10A system:

SYSTEM CONFIGURATION	DRY WEIGHT
Conventional	123.2 LB
Odd-Even	105.5 LB
	17.7

The weight reduction is approximately 14.4%. No significant fluid weight savings accrued.

2.3.3.1.6 Control Restrictor Elimination - Utility - The viscosity characteristics of the selected A02 CTFE fluid are significantly lower than those of present fluids, particularly at low temperatures. A comparison is given in Figure 174. A comparison of MIL-H-83282 and CTFE viscosities at -65'F shows a 10 to 1 difference (11,500 centistokes for MIL-H-83282 vs 1,200 centistokes for the CTFE fluid). With high viscosity fluids, restrictors which are sensitive only to density must drop a significant portion of the energy so that acceptable low temperature performance may be achieved.

This low temperature performance problem exists primarily with utility functions. The valve null leakage is so low and the location so remote from the actuators that rapid warmup due to leakage is not reasonable.

Performance vs temperature for a typical utility subsystem using various fluids is presented in Figure 175.

The MIL-H-83282 fluid low temperature performance degradation is unacceptable without restrictors. However, the CTFE A02 fluid performance without restrictors is quite good.

FLUID PROPERTY	FLUID			
	CTFE (A02)	MIL-H-5606	MIL-H-83282A	SKYDROL 500 B
HEAT OF COMBUSTION (BTU/LB)	2,390	18,100	17,700	12,800
A.I.T. (°F)	1,170	435	650	950
ATOMIZED SPRAY TEST (PROPANE TORCH IGNITION)	NONREACTIVE	SUSTAINS	SUSTAINS	EXTINGUISHES
VISCOSITY CS				
• −65°F	1,200	2,127	11,980	3,500
• −40°F	202	500	2,116	600
• 275°F	0.661	3.4	2.247	2.5
SPECIFY GRAVITY				
• 77°C GM/CC	1.84	0.83	0.84	1.06
BULK MODULUS (PSI)				
• ADIABATIC TANGENT AT 3,000 PSI 77°F	243,214	273,300	274,200	320,500
COST ($/GAL.)	50 - 100	4	9	18

GP23-0560-88

Figure 174.
HYDRAULIC FLUID PROPERTIES

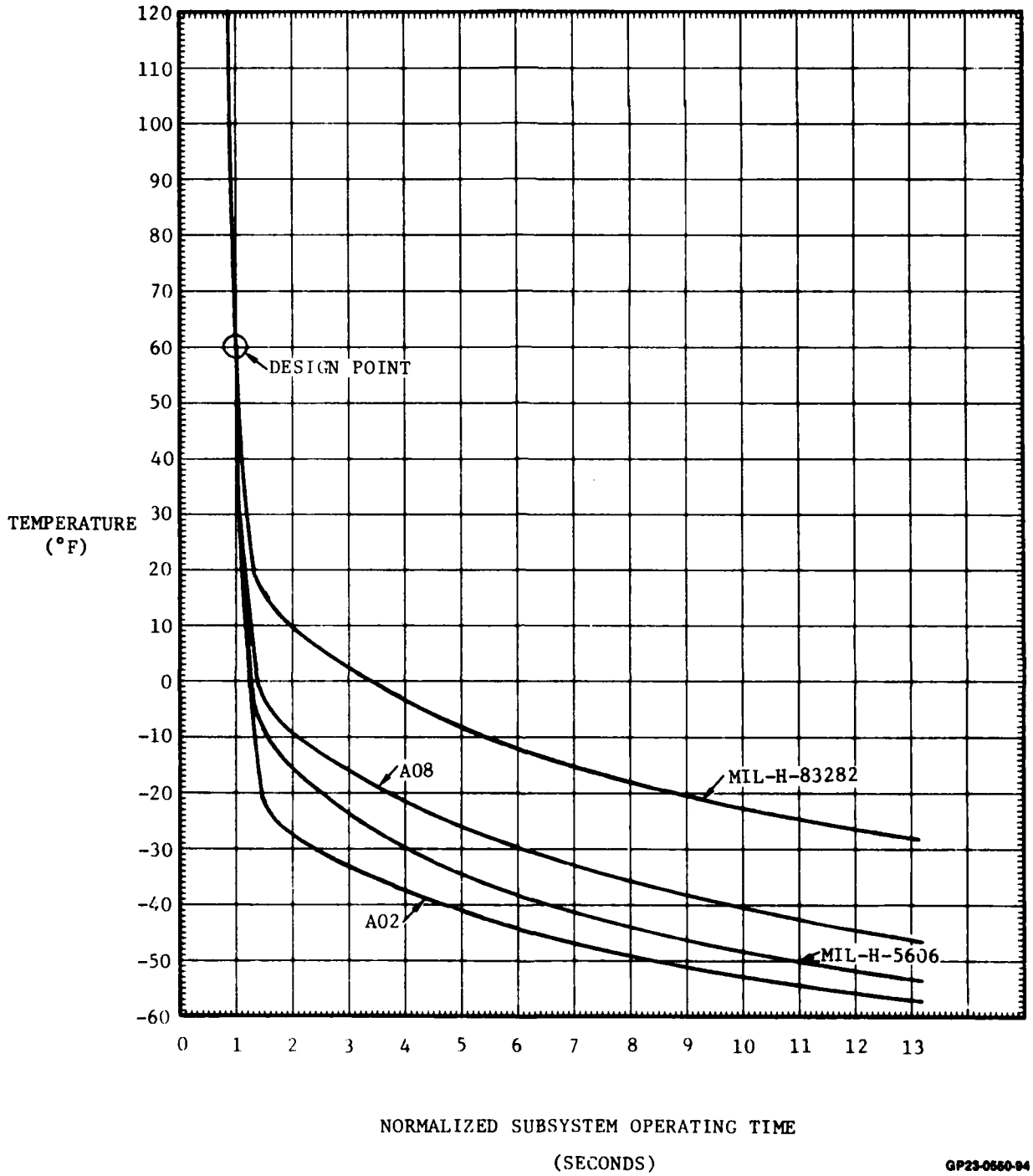

FIGURE 175
TYPICAL UTILITY SUBSYSTEM OPERATING TIME vs FLUID TEMPERATURE
Without Restrictors - No Load

The 3000 psi system F-15 main landing gear subsystem was used to evaluate CTFE, MIL-H-5606 and MIL-H-83282 fluid performance without restrictors. The A02 CTFE fluid was sized to drop all the energy in the lines and meet the 60°F design point performance. The other two fluids performance was then evaluated on a drain and fill basis. The results are shown in Figure 176. The MIL-H-83282 fluid performance vs temperature without restrictors is unacceptable.

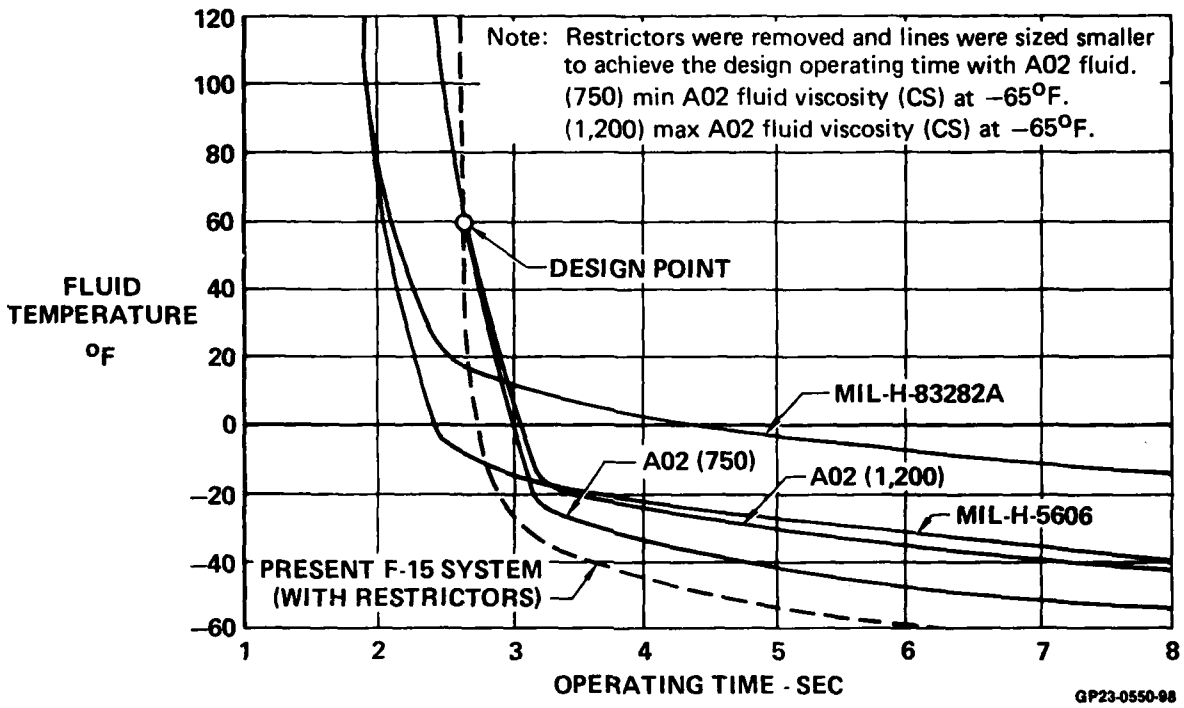

Figure 176.

F-15 MAIN LANDING GEAR ACTUATOR OPERATING TIME vs FLUID TEMPERATURE

The approach was then modified to include both 60°F and -40°F design points. The CTFE system was modified as necessary to meet both points without restrictors. The MIL-H-5606 and MIL-H-83282 systems were then modified as necessary, including restrictors, to meet the two design points as closely as possible. The results are presented in Figure 177. Both MIL fluids perform reasonably.

The subsystem weight including fluid was then determined. The results were compared and are presented in Figure 178.

The use of the MIL-H-83282 rather than the CTFE fluid results in a 105% weight penalty.

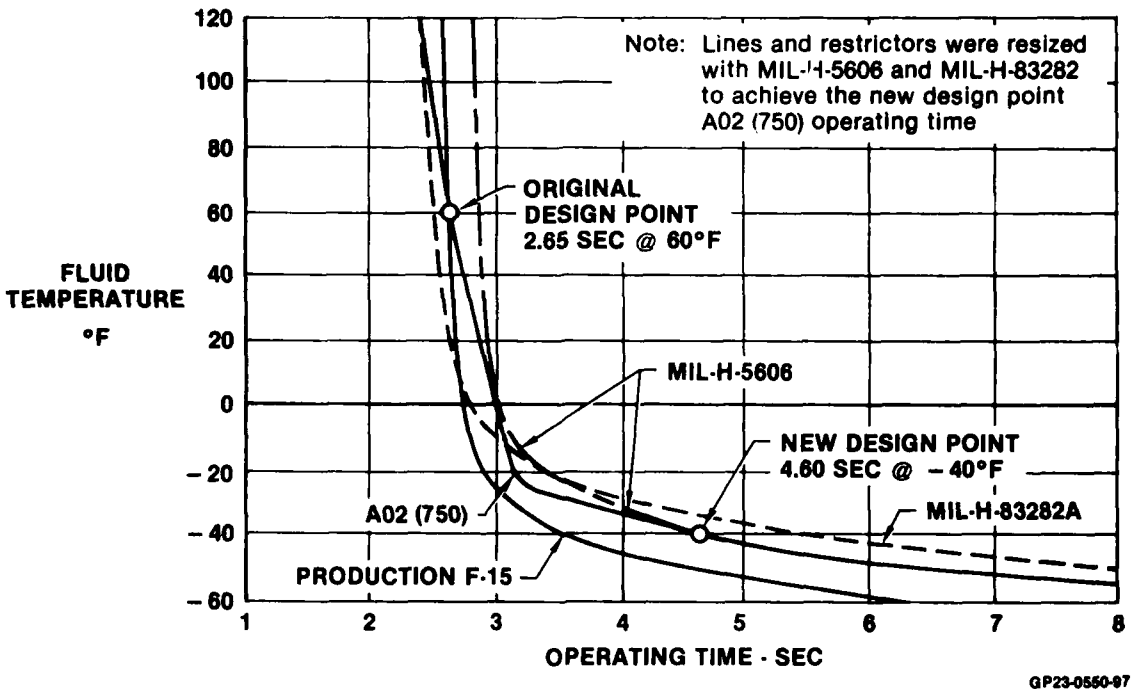

Figure 177.
F-15 MAIN LANDING GEAR ACTUATOR OPERATING TIME vs FLUID TEMPERATURE

SYSTEM/FLUID (SAME PERFORMANCE REQUIREMENT)	WEIGHT PENALTY (W/W_B)
• CTFE FLUID (BASELINE SYSTEM) - WITHOUT RESTRICTORS	1.00
• MIL-H-5606 - MODIFIED PRODUCTION SYSTEM WITH RESTRICTORS	1.23
• MIL-H-83282 FLUID - MODIFIED PRODUCTION SYSTEM WITH RESTRICTORS	2.05

GP23-0550-96

Figure 178.
CTFE A02 LOW VISCOSITY FLUID BENEFITS
F-15 Main Landing Gear Distribution System
Weight vs Fluid for 3,000 PSI System

2.3.3.1.7 Asymmetric Line Loss - The objective of the asymmetric distribution system line loss approach was to help control water hammer peaks. It does so by reducing the base pressure from whence the transient propagates. The asymmetric concepts and complimentary concepts are shown in Figure 179.

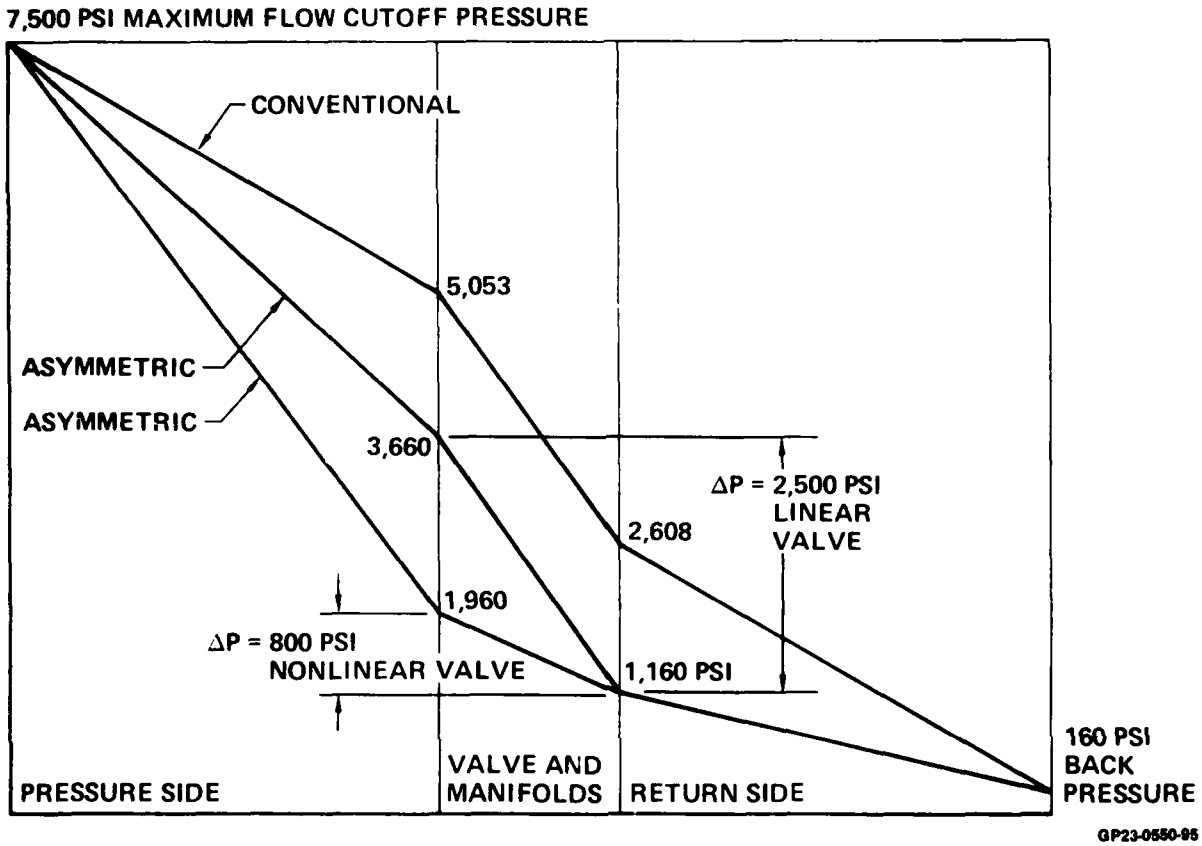

Figure 179.
PRESSURE LOSS DISTRIBUTION

The asymmetric line loss concept also reduces the weight of the distribution system. One of the KC-10A systems was used in this evaluation. The results are as shown below.

SYSTEM CONFIGURATION	DRY WEIGHT
Odd-Even Plus NonLinear Valve	101.8 LB
Odd/Even Plus NonLinear Valve & Asymmetric Dist.	98.0 LB
	3.8 LB

This is a 3.7% weight reduction.

2.3.3.2 Performance Maintenance and Improvement Concepts

2.3.3.2.1 Force Motor - The force motor impact on system/subsystem performance is expected to be neutral. Current force motor dynamic performance is approaching that of electro hydraulic valves.

2.3.3.2.2 Load Recovery Valves - Load recovery valves may improve performance while reducing peak energy requirements.

This concept is based on finding an efficient way of using the assisting load energy in a flight control subsystem. The result can be a reduction in peak power requirements and a significant increase in average surface rate.

Figure 180 presents typical conventional system performance characteristics in terms of rate vs hinge moment. The curve is the locus of an infinite number of rates available for a given constant hinge moment. In the real world some trim load would be held. If a command were given to move in the direction of increasingly resisting load, the new position would be achieved at an average rate significantly higher than that available with a stopping point constant hinge moment. Also, if the motion is in the direction of assisting loads then the average rate may be relatively higher than the end point rate when compared to moving against a resisting load. If the pressure drop in the system is evenly divided between pressure and return including the valve halves, the rate capability with a 100% assisting load is the equivalent of applying 6000 psi to a 3000 psi system. The resulting rate is 2 x 100% no load rate or 141% of no load rate capability.

Figure 181 shows the location and function of the load recovery valves.

The load recovery valve location and function are identical to those used by bypass valves in dual tandem actuators. The bypass valve provides for direct routing of fluid metered from pressure to return through the control valve back to the other side of the actuator and prevents cavitation. If one of the two systems is shut down, the bypass function prevents the shut down portion of the actuator from interfering.

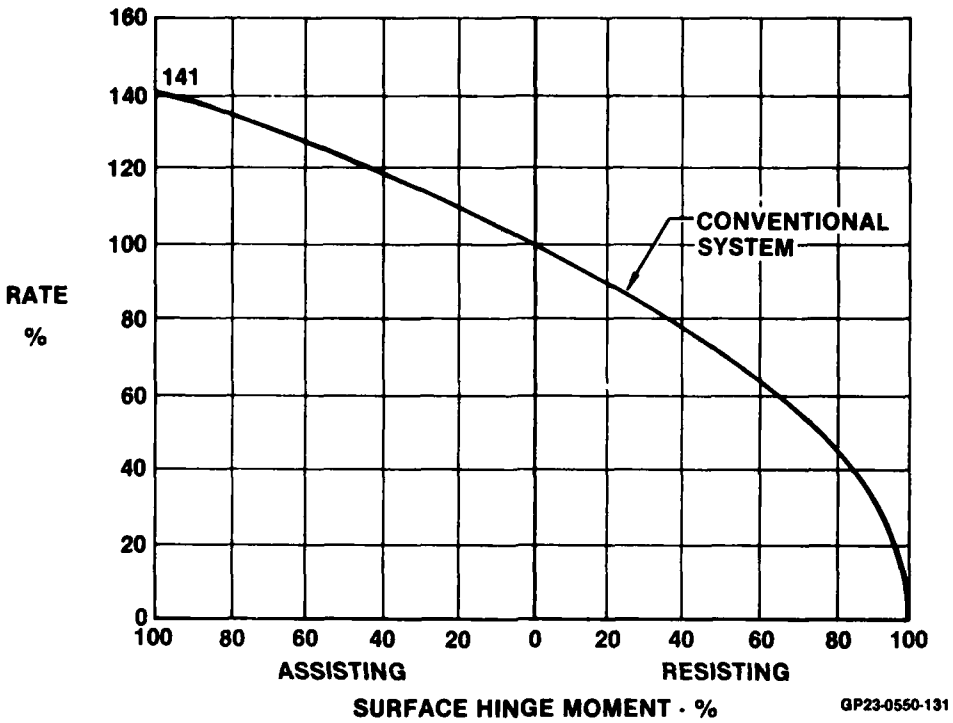

Figure 180.
CONVENTIONAL SYSTEM TYPICAL FLIGHT CONTROL SUBSYSTEM PERFORMANCE CHARACTERISTICS

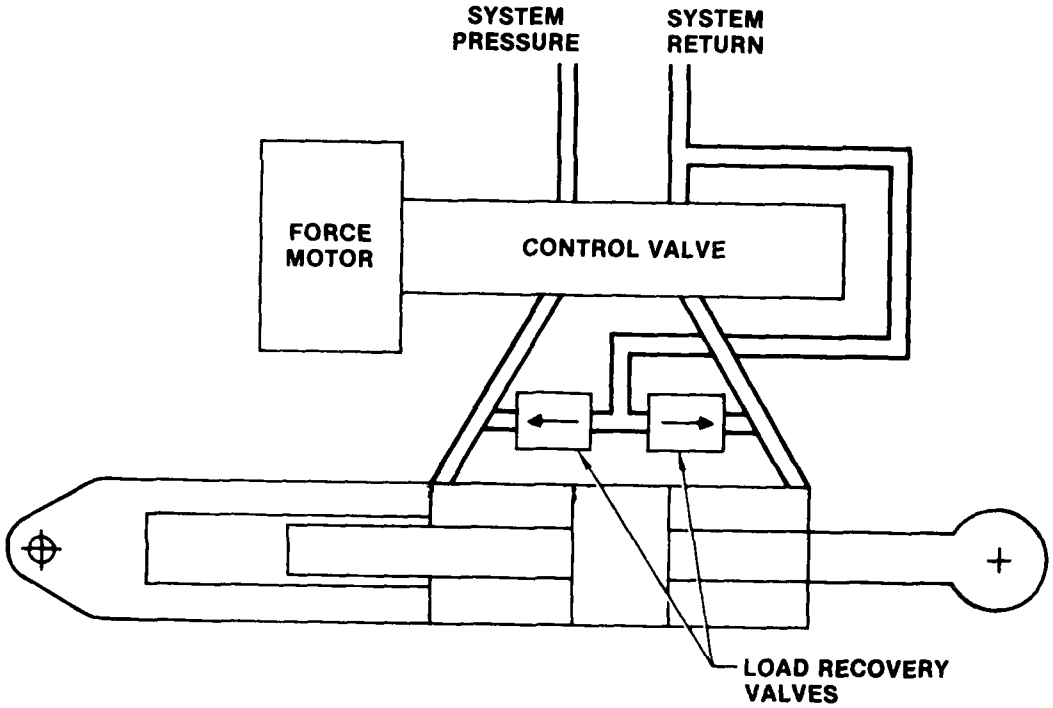

GP23-0550-130

Figure 181.
SCHEMATIC - LOAD RECOVERY VALVE USAGE

For the bypass valve, the maximum flow which must be handled is the 141% flow rate discussed previously. The key to effective use of the valve as a load recovery valve is sizing the valve to handle the potentially significantly higher flow rates. The line and valve resistances/losses are shown in Figure 182. In the conventional system, with $P_{RL} + P_{RV} = R_{RL} + R_{RV}$, the assisting load is another "pump" and the rate is defined by the resistance characteristics of R_{RL} and R_{RV} which must accept the combined flow from the system and the external pump. Hence the 141% of no load rate achievable with 100% assisting load.

With the load recovery valve system, the load recovery valve can eliminate P_{RL}, P_{RV}, and R_{RL} as effective rate control devices. The return side of the control valve (R_{RV}) in conjunction with load recovery valve (LRV_R) combines to determine the assisting load rates. Since the system cannot keep up with the potentially high surface rates, the load recovery valve is used to eliminate pressure side cavitations.

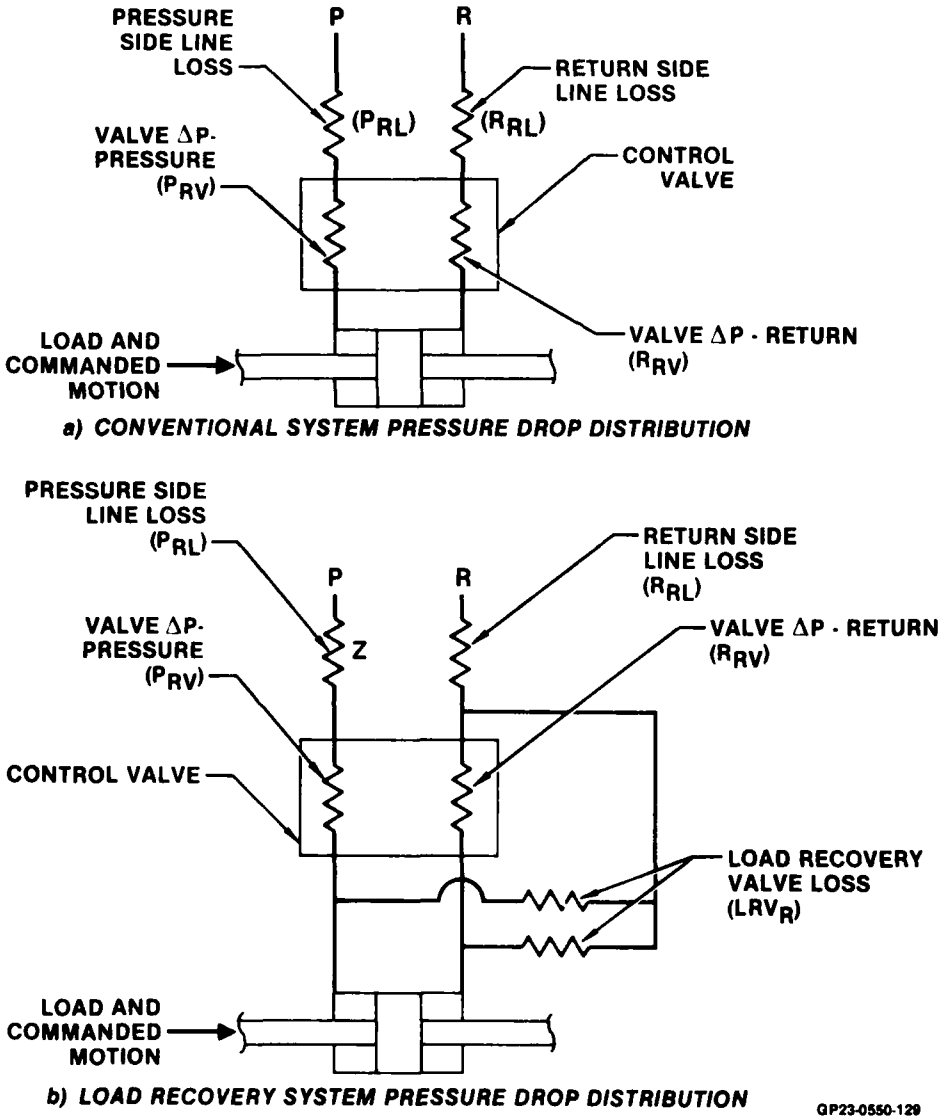

Figure 182.
PRESSURE DROP DISTRIBUTION -
CONVENTIONAL AND LOAD RECOVERY SYSTEMS

The use of the asymmetric/nonlinear valve concept accentuates the tendency for pressure side cavitation with assisting loads. The pressure loss distribution for conventional vs asymmetric/nonlinear valve (A-NLV) systems is shown below for an 8000 psi system. The pump full flow pressure is assumed to be 7500 psi.

System Component	Conventional System	A-NLV System
Press. Line	2500 psi	5700 psi
Press. Side Valve Orifice	1250 psi	400 psi
Return Side Valve Orifice	1250 psi	400 psi
Return Line	2500 psi	1000 psi

Since the A-NLV pressure side P is 6100 psi vs only 3750 psi for the conventional system, the maximum flow rate with the 7500 psi differential available is much less.

$$\left(\sqrt{\frac{7500}{6100}} = 111\% \text{ VS } \sqrt{\frac{7500}{3750}} = 141\%\right)$$

This A-NLV system characteristic can be beneficial since the peak demand on the central system is reduced from 141% to 111%.

Figure 183 presents the assisting load performance characteristics for the A-NLV system with and without the load recovery valve. The conventional system does not cavitate and the rate with 100% assisting load is 141% (41% higher than no load rate). The A-NLV system rate is 231% at the maximum assisting load point without the load recovery valve. The pressure side downstream of the valve is cavitating significantly. The central system outputs 111% vs the 231% rate established by the assisting load. If the load recovery valve is incorporated and optimized, the cavitation is eliminated and the rate capability at 100% assisting load is increased to 426%. The increase is due to eliminating the additional flow, and consequently the control, associated with the return line.

Again, it must be noted that the performance curves shown in Figure 183 are the locus of an infinite number of rates for constant hinge moments. In the real world the hinge moment is changing with position, so average rates are derived. The use of the load recovery valve results in a significant increase in average rate capability in the assisting load direction. For example, (assuming a commanded motion from 50% assisting load to 50% resisting load):

System	Approximate Average Rate
Conventional	98 - 100%
A-NLV	135 - 140%

	3,000 PSI						8,000 PSI			
	DRY WEIGHT (LB)	FLUID VOLUME (IN.^{3})	FLUID WEIGHT (LB) 5606	WET WEIGHT (LB) 5606	FLUID WEIGHT (LB) CTFE	WET WEIGHT (LB) CTFE	DRY WFIGHT (LB)	FLUID VOLUME (IN.^{3})	FLUID WEIGHT (LB) CTFE	WET WEIGHT (LB) CTFE
ARRESTING HOOK UPLATCH										
ACTUATOR	2.50	9.80	0.30	2.80	0.63	3.13	2.41	5.63	0.36	2.77
VALVE	1.10			1.10		1.10	0.99			0.99
OTHER	0.30			0.30		0.30	0.30			
TOTAL	3.90	9.80	0.30	4.20	0.63	4.53	3.70	5.63	0.36	4.06
MAIN LANDING GEAR										
ACTUATOR										
RETRACT	20.60	118.30	3.62	24.22	7.57	28.17	20.74	65.00	4.16	24.90
UPLOCK	6.90	11.76	0.36	7.26	0.75	7.65	6.64	6.72	0.43	7.07
VALVES										
UPLOCK	0.50						0.45			
RETRACT	13.9						12.51			
BRAKE OPERATE	5.70						5.70			
EMERGENCY EXT	1.50						1.50			
MISCELLANEOUS	5.70	(36.60)	(1.12)	(28.42)	(2.34)	(29.64)	5.70	15.16	(0.97)	(26.83)
TOTAL	54.80	166.66	5.10	59.90	10.66	65.46	53.24	86.88	5.56	58.80

GP23-0550-213

Figure 194. (Continued)
F-15 COMPONENT WEIGHT BREAKDOWN BY SUBSYSTEM

	3,000 PSI						8,000 PSI			
	DRY WEIGHT (LB)	FLUID VOLUME (IN.^{3})	FLUID WEIGHT (LB) 5606	WET WEIGHT (LB) 5606	FLUID WEIGHT (LB) CTFE	WET WEIGHT (LB) CTFE	DRY WEIGHT (LB)	FLUID VOLUME (IN.^{3})	FLUID WEIGHT (LB) CTFE	WET WEIGHT (LB) CTFE
SPEEDBRAKE										
ACTUATOR	34.60	150.33	4.60	39.20	9.62	44.22	29.56	29.53	1.89	31.45
VALVE	4.20			4.20		4.20	3.79			3.79
MISCELLANEOUS	1.00			1.00		1.00	1.00			1.00
TOTAL	39.80	150.33	4.60	44.40	9.62	49.42	34.35	29.53	1.89	36.24
FLAPS										
ACTUATOR	24.10	26.14	0.80	24.90	1.67	25.77	19.86	17.19	1.10	20.96
TOTAL	24.10	26.14	0.80	24.90	1.67	25.77	19.86	17.19	1.10	20.96
ECS AUXILIARY AIR INLET										
ACTUATOR	3.20	3.27	0.10	3.30	0.21	3.41	3.10	1.88	0.12	3.22
VALVE	1.40			1.40		1.40	1.26			1.26
SUBTOTAL	4.60	3.27	0.10	4.70	0.21	4.81	4.36	1.88	0.12	4.48
HYDRAULIC UTILITY SYSTEM										
VALVE										
TEMPERATURE REGULATOR	1.50	15.03	0.46	1.96	0.96	2.46	2.04	6.25	0.40	
OTHER	4.50						4.50			
MISCELLANEOUS										
PUMP	52.96	193.46	5.92	58.88	12.38	65.34	43.60	133.91	8.57	52.17
RESERVOIR	24.95	589.87	18.05	43.00	37.75	62.70	17.77	264.84	16.95	34.72
PRIMARY HEAT EXCHANGER	0.86	1.31	0.04	0.90	0.08	0.94	0.83	0.63	0.04	0.87
PRIMARY HX VALVE	1.30						1.17			
OTHER	41.03	(105.23)	(3.22)	(50.05)	(6.73)	53.56	41.73	(43.44)	(2.78)	(50.18)
SUBTOTAL	127.10	904.90	27.69	154.79	57.90	185.00	111.64	449.07	28.74	140.38

GP23-0550-216

Figure 194. (Continued)
F-15 COMPONENT WEIGHT BREAKDOWN BY SUBSYSTEM

	3,000 PSI						8,000 PSI			
	DRY WEIGHT (LB)	FLUID VOLUME (IN.^{3})	FLUID WEIGHT (LB) 5606	WET WEIGHT (LB) 5606	FLUID WEIGHT (LB) CTFE	WET WEIGHT (LB) CTFE	DRY WEIGHT (LB)	FLUID VOLUME (IN.^{3})	FLUID WEIGHT (LB) CTFE	WET WEIGHT (LB) CTFE
AIR INDUCTION										
ACTUATORS										
BYPASS	15.00	49.02	1.50	16.50	3.14	18.14	13.64	20.63	1.32	14.96
DIFFUSER RAMP	33.68	155.56	4.76	38.44	9.96	43.64	30.84	75.63	4.84	35.68
FIRST RAMP	24.48	54.25	1.66	26.14	3.47	27.95	22.42	26.25	1.68	24.10
OTHER	2.04	2.61	0.08	2.12	0.17	2.21	2.04	1.09	0.07	2.11
TOTAL	75.20	261.44	8.00	83.20	16.74	91.94	68.94	123.59	7.91	76.85
AILERONS										
ACTUATORS	48.00	31.37	0.96	48.96	2.01	50.01	43.92	39.06	2.50	46.42
VALVES										
SWITCHING	10.52	15.03	0.46	10.98	0.96	11.48	9.66	7.81	0.50	10.16
OTHER	0.58			0.58		0.58	0.58			0.58
TOTAL	59.10	46.40	1.42	60.52	2.97	62.07	54.16	46.88	3.00	57.16
STABILATOR										
ACTUATORS	121.80	220.92	6.76	128.56	14.14	135.94	119.11	99.84	6.39	125.50
VALVES										
SWITCHING	10.52	15.03	0.46	10.98	0.96	11.48	9.66	7.81	0.50	10.16
OTHER	2.08			2.08			2.08			2.08
MISCELLANEOUS	71.00	(103.92)	(3.18)	74.18	(6.65)	79.73	71.00	(42.81)	(2.74)	73.74
TOTAL	205.40	339.87	10.40	215.80	21.75	227.15	201.85	150.46	9.63	
RUDDER										
ACTUATOR	48.00	16.34	0.50	48.50	1.05	49.05	40.81	15.63	1.00	41.81
OTHER	3.00			3.00		3.00	3.00			3.00
MISCELLANEOUS	36.60	53.59	1.64	38.24	3.43	40.03	36.60	22.19	1.42	38.02
TOTAL	87.60	69.93	2.14	89.74	4.48	92.08	80.41	37.82	2.42	82.83

GP23-0550-189

Figure 194.
F-15 COMPONENT WEIGHT BREAKDOWN BY SUBSYSTEM

Figure 194 details the weight changes to components in each F-15 hydraulic subsystem. The impact on additional equipment not included in the hydraulic subsystem summary is shown in Figure 195.

KC-10A hydraulic system weight estimates for both initial and final 8000 psi design criteria are shown in Figure 196.

Figure 197 details the specific weight changes for the KC-10A hydraulic components at 8000 psi versus the current 3000 psi units. The weights at the two pressures are further divided by system category in Figure 198. Figure 199 shows the KC-10A total wet actuator weight as a function of pressure and illustrates how the minimum weight points differ for CTFE and MIL-H-5606 hydraulic fluids.

Total hydraulic system weight estimates include tubing and other associated distribution hardware not included in specific subsystem component weight estimates.

2.3.5.3 Distribution System Detail Design and Results - The complete hydraulic systems for each aircraft were computer modeled using the SSFAN program. Baseline data files were established at 3000 psi with MIL-H-5606 fluid. All tubes, hoses and fittings were included in the data. Actual tubing bends were also included where available. Actuators were resized to give the same force output. Valve gains were the nonlinear concept. Each subsystem model was then "tuned" to a known performance point from test data. The distribution systems were resized at 8000 psi using the following weight savings concepts:

1) Asymmetric pressure/return pressure drop

2) Odd/even pressure/return lines

3) Nonlinear valves

Figures 200 and 201 summarize the distribution system weights for the F-15 and KC-10A respectively.

2.3.5.4 Concepts, Detail Design and Results

2.3.5.4.1 Pressure Intensifier - A pressure intensifier functions to increase local (actuator) system pressure and, hence, the actuator power output as explained in Section 2.2.1.2.3a). The MCAIR concept unit consists of a bi-stable spool valve, reciprocating piston assembly (with 2:1 area change) and associated switching valving as shown in Figure 202.

	WEIGHT - LB		
	3,000 PSI	PRELIMINARY 8,000 PSI	FINAL 8,000 PSI
FLIGHT CONTROL ACTUATORS	221	187	207(2)
UTILITY ACTUATORS	207	190	191
MISCELLANEOUS COMPONENTS	544	453	462(1)
DISTRIBUTION SYSTEM	220	157	114
FLUID - CTFE	359	187	146
TOTALS	1,551	1,174	1,120

Notes:

(1) Additional heat exchanger requirement - 10 lb

(2) F-15 stabilator stiffness requirement increased weight 17 lb

GP23-0550-186

Figure 192.

F-15 WEIGHT SUMMARY

THE FOLLOWING F-15 COMPONENTS WERE STUDIED UNDER THE DETAIL DESIGN PHASE AT THE SELECTED 8,000 PSI OPERATING PRESSURE

FLIGHT CONTROLS

- AILERON
- STABILATOR

UTILITY

- AERIAL REFUEL RECEPTACLE
- BYPASS DOOR
- CANOPY ACTUATOR
- DIFFUSER RAMP
- FLAP
- MAIN LANDING GEAR
- PRIMARY HEAT EXCHANGER
- SWITCHING VALVE
- TEMPERATURE REGULATING VALVE
- PC-1 AND PC-2 RESERVOIRS
- UTILITY RESERVOIR
- SOLENOID VALVES
- JFS MOTOR
- SYSTEM ACCUMULATOR
- CANOPY ACCUMULATOR

OTHER COMPONENTS WERE ESTIMATED BASED ON DESIGN TRENDS NOTED AND OR SIMILARITY TO REDESIGNED UNITS

GP23-0550-187

Figure 193.

F-15 8,000 PSI COMPONENT DESIGN

2.3.5.2 Component Detail Design and Results - Component weight benefits at 8000 psi were determined by comparison to the equivalent unit at 3000 psi for each subsystem.

Figure 191 details the existing 3000 psi hydraulic system weights for the F-15 and the KC-10A aircraft, the latter including an estimate for replacing the Skydrol with MIL-H-5606 fluid.

	F-15	KC-10A	
	MIL-H-5606 (LB)	SKYDROL (LB)	MIL-H-5606 (LB)
FLIGHT CONTROL ACTUATORS	221	1,238	1,238
UTILITY ACTUATORS	207	837	837
MISCELLANEOUS COMPONENTS	544	1,593	1,593
DISTRIBUTION SYSTEM	220	1,817	1,817
FLUID	163	1,360	1,075
TOTAL	1,355	6,845	6,560

GP23-0550-185

Figure 191.

CANDIDATE AIRCRAFT HYDRAULIC SYSTEM WEIGHT BREAKDOWN

Baseline 3,000 PSI

F-15 Aircraft Dry Weight = 28,438 Lb

KC-10A Aircraft Dry Weight = 247,735 Lb

F-15 hydraulic system weight estimates for both the initial and final 8000 psi design criteria are shown in Figure 192. All F-15 hydraulic components redesigned for 8000 psi are listed in Figure 193.

CTFE FLUID	BURST	PROOF	TRANSIENT
PRESSURE MARGINS			
FLIGHT CONTROLS (PRESSURE TRANSIENT CONTROL)	2.25 (18,000 PSI)	1.38 (11,000 PSI)	1.20 (9,600 PSI)
UTILITY CONTROLS (W/O PRESSURE PEAK CONTROL)	2.75 (22,000 PSI)	1.75 (14,000 PSI)	1.50 (12,000 PSI)
RETURN MARGINS	1.38 (11,000 PSI)	1.0 (8,000 PSI)	0.34 (2,700 PSI)

GP23-0550-282

Figure 189.
DESIGN CRITERIA 8,000 PSI
Final Configuration

2.3.5.1.1 F-15 Weight Changes for Change in Design Criteria at 8000 psi - Study and modification of component design criteria continued during the initial study phase. Consequently, certain actuator designs for 8000 psi pressure required updating accordingly. Figure 190 illustrates the actuator weight increases due to final revisions of the 8000 psi design criteria.

	NO. PER AIRCRAFT	8,000 PSI, DRY WEIGHTS (LB)		TOTAL PER AIRCRAFT (LB)
		INITIAL CRITERIA	FINAL CRITERIA	
DIFFUSER RAMP	2	15.40	15.42	0.04
MAIN LANDING GEAR	2	8.40	10.37	3.94
BYPASS DOOR	2	6.31	6.82	1.02
				+ 5.00

GP23-0550-279

Figure 190.
WEIGHT INCREASE

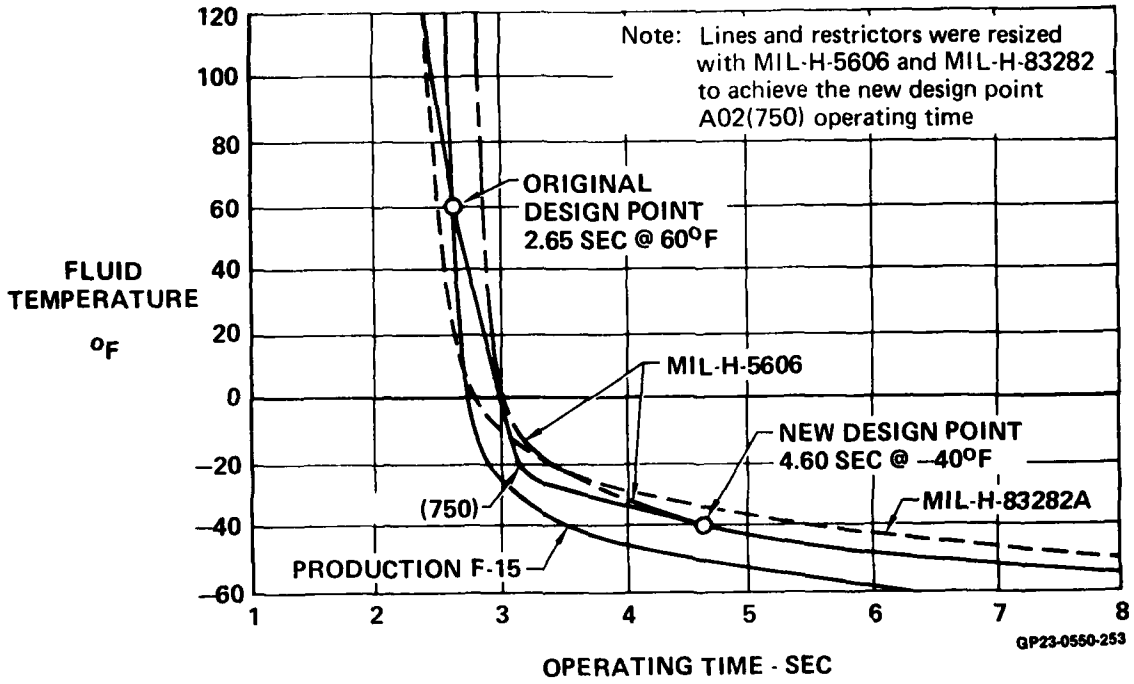

Figure 188.
F-15 MAIN LANDING GEAR ACTUATOR
OPERATING TIME vs FLUID TEMPERATURE

2.3.5 FINAL WEIGHT IMPACT ANALYSIS

2.3.5.1 Modified Design Criteria - The component design criteria for the detailed analysis at 8000 psi is presented in Figure 189. The flight control components criteria were reduced since the analysis showed that the CTFE fluid water hammer transients could be controlled satisfactorily.

Utility components requirements were left at or near preliminary criteria margins since the analysis showed water hammer could not be conveniently controlled in many utility functions.

The return margins were reduced slightly (Transient 0.34 vs 0.40).

2.3.4 FLUID SELECTION FOR CONTINUED ANALYSIS - CTFE A02 was selected for final analysis. The fluid is nonflammable, inert and nontoxic. A02 has a high fluid stability and resists shear down. With use of higher pressures and acceptable innovations, the weight penalty using A02 can be controlled.

Some subsystems show a weight benefit using CTFE A02. Typically, this subsystem is one that uses restrictors to control the operating time over a fluid temperature range. A02 fluid kinematic viscosity does not change as much at low temperature as other fluids. Therefore, the restriction to achieve operating times can be obtained by sizing lines smaller.

Figure 187 shows that the F-15 main landing gear distribution system at 3000 psi would actually weigh more using MIL-H-5606 or MIL-H-83282 fluid. A computer analysis was run for this study with results shown in Figure 188.

SYSTEM/FLUID (SAME PERFORMANCE REQUIREMENT)	WEIGHT PENALTY (W/W_B)
• CTFE FLUID (BASELINE SYSTEM) - WITHOUT RESTRICTORS	1.00
• MIL-H-5606 - MODIFIED PRODUCTION SYSTEM WITH RESTRICTORS	1.23
• MIL-H-83282 FLUID - MODIFIED PRODUCTION SYSTEM WITH RESTRICTORS	2.05

GP23-0550-252

Figure 187.
CTFE A02 LOW VISCOSITY FLUID BENEFITS
F-15 Main Landing Gear Distribution System
Weight vs Fluid for 3,000 PSI System

- HIGHER SYSTEM PRESSURE
- FORCE MOTOR (FLIGHT CONTROLS)
- ENERGY CONSERVATION
  - INTENSIFIERS
  - LOAD RECOVERY VALVES
- NONLINEAR CONTROL VALVES
- "ODD-EVEN" DISTRIBUTION SYSTEM
- CONTROL RESTRICTOR ELIMINATION - UTILITY FUNCTIONS
- WATER HAMMER CONTROL (FLIGHT CONTROLS)
  - WATER HAMMER ATTENUATOR
  - ASYMMETRIC LINE LOSS DISTRIBUTION
  - LOCAL VELOCITY REDUCTION
- WATER HAMMER CONTROL (UTILITY)
  - WATER HAMMER ATTENUATOR
  - NONLINEAR VALVE PLUS ORIFICE TIME CONTROL
  - FORCE MOTOR VALVE CONTROL

GP23-0550-126

Figure 185.
CANDIDATE CONCEPTS/APPROACHES FOR SYSTEM WEIGHT REDUCTION AND MAINTAINING ACCEPTABLE PERFORMANCE

- PRESSURE - 8,000 PSI
- FLUID - A02 CTFE
- CONCEPTS/APPROACHES SELECTED
  - FORCE MOTORS
  - NONLINEAR VALVES
  - DISTRIBUTION SYSTEM
    - "ODD-EVEN"
    - ASYMMETRIC LINE LOSS
    - LOCAL VELOCITY REDUCTION
    - RESTRICTOR ELIMINATION IN UTILITY FUNCTIONS

GP23-0550-125

Figure 186.
SELECTED FINAL CONFIGURATION FOR WEIGHT SAVINGS EVALUATION

A digital on-off control input to the force motor was optimized. It consisted of 3 milliseconds on 3 milliseconds off full current pulses. One power pulse provided resolution twice as good as required by the actuator specification (0.003 vs 0.006). If the pulsing were continued, the valve would be full open in three to four pulses and remain open as long as the pulsing continued.

The digital control input frequency of operation demonstrated is approximately 160 hertz. Current micro processors operate at 80 hertz and if 160 hertz (or higher) is required it would appear to be no problem.

The valve position (1/4, 1/2, 3/4, or full open) is proportional to the current. Therefore, if the rate of motion commanded can be used to control the magnitude of the current-on portion of the pulse, relatively smooth actuator main ram motion can be achieved.

Obviously, significant additional effort is required. However, the potential would seem to justify it.

2.3.3.3.2 A02 VS MIL-H-83282 - With the selection of 8000 psi, the baseline fluid has changed from MIL-H-5606 to MIL-H-83282. The U.S. Navy evaluated MIL-H-27601, MIL-H-83282, and MIL-H-5606 for acceptable 8000 psi system operation. The MIL-H-83282 fluid was selected. The viscosity of the MIL-H-83282 fluid is much higher than the A02 CTFE fluid, particularly at the lower temperature.

As discussed in Sections 2.2.1.2.6 and 2.3.3.1.6, MIL-H-83282 fluid can incur significant weight penalties in the utility functions. Work is in process to weigh out the F-15 and KC-10A for both fluids at 8000 psi. This effort will finally determine the A02 CTFE fluid weight penalty vs the baseline fluid system weight.

2.3.3.3.3 Pressure Intensifiers - The potential weight savings associated with the use of pressure intensifiers was estimated for the F-15 and KC-10A aircraft. The estimate indentifies a 10% system weight savings at 8000 psi for both aircraft. Work is in process to:

- o Confirm or deny or modify the estimated weight savings
- o Evaluate location and optimize control approaches
- o Verify acceptability of reduced "resisting load" performance

2.3.3.4 Concepts Selected for Continued Analysis - The concepts considered as candidates for system weight reduction while maintaining acceptable performance are presented in Figure 185. Of these candidates, those presented in Figure 186 were selected for the final evaluation at 8000 psi.

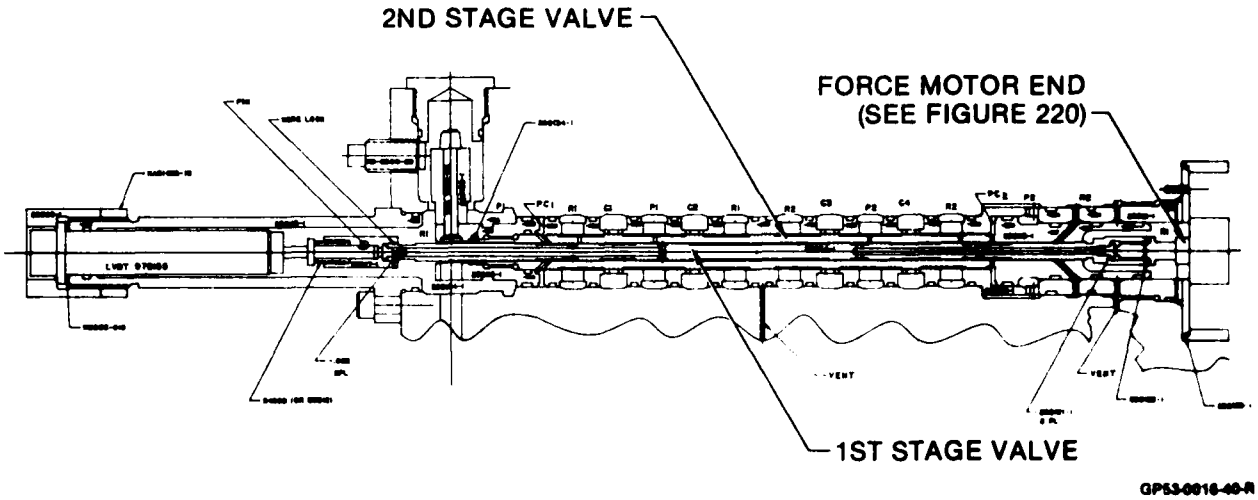

FIGURE 184
TWO STAGE VALVE ASSEMBLY CROSS SECTION

Digital computers for flight control are preferred over analog computers for various reasons. The F-18 currently employs digital computers and D/A convertors for control of the analog valve controlled actuators. The digital computers update commands to each flight control actuator every 25 milliseconds (40 hertz frequency).

For high rate actuators such as the stabilators, the motion tends to be "digital". The error signal is reduced such that the valve gets partly closed before the updated "keep going" command is communicated. The result is 1200 to 1500 psi pressure pulsations at 40 hertz frequency.

The digital valve concept involves digital computers and digital control valve operation on the actuators. The objectives are:

- o Smooth, non-digital operation
- o Adequate resolution
- o Acceptable dynamic performance

Smooth, non-digital operation at maximum no load rate was demonstrated in the MCAIR testing conducted in 1978. In addition, adequate resolution was demonstrated.

Acceptable dynamic performance and smooth, non-digital operation at slower than maximum no load rates remain to be demonstrated.

The approach used to demonstrate smooth maximum no load rate and adequate resolution is as follows.

2.3.3.2.6 NonLinear Valve plus Orifice - Utility - The nonlinear valve used in utility functions will not improve basic performance. Its primary function is to provide water hammer transient control.

2.3.3.3 Additional New Concepts and Continuing Studies

2.3.3.3.1 Digital Valve - Leakage Control - A digital valve concept is being studied which has the following potential advantages:

- o Leakage (energy loss) control at high pressures (8000 psi plus)
- o Weight savings due to making more energy available for line loss (smaller lines) and simplification of the control valve and manifold

The digital valve would be operated via a force motor.

The CTFE A02 fluid low viscosity may contribute to higher null leakage, particularly at 8000 psi. The use of overlap, say 0.015 inches vs the normal "line to line" (zero overlap) valves can really control null leakage and thus energy losses. However, dynamic performance with a 0.015 inch overlap is unacceptable using conventional control approaches.

In 1978, MCAIR conducted tests with a 0.015 overlap valve to evaluate control techniques which could give acceptable dynamic performance. This effort was with hardware similar to that used in the Air Force program "Advanced Single Stage Control Valve for Hydraulic Actuators", AFWAL-TR-81-2032, April 1981 (Reference 10). The digital configuration tested is similar to that shown in Figure 31, page 33 of the report. Figure 184 presents a version of that figure. The valve tested was a two stage unit. The first stage is driven by a force motor. Both the first and second stage are spring centered. The second stage controls the flow to and from the main ram and is a slave to the position command of the first stage. The first stage position is controlled by a force motor. The first stage uses system pressure and low flows directed to chambers on the second stage to position the second stage.

The first stage is obviously the master in its relationship to the second stage. The concentric valve approach is preferred for packaging efficiency and provides a known geometric position feedback for ascertaining second stage position relative to the first stage.

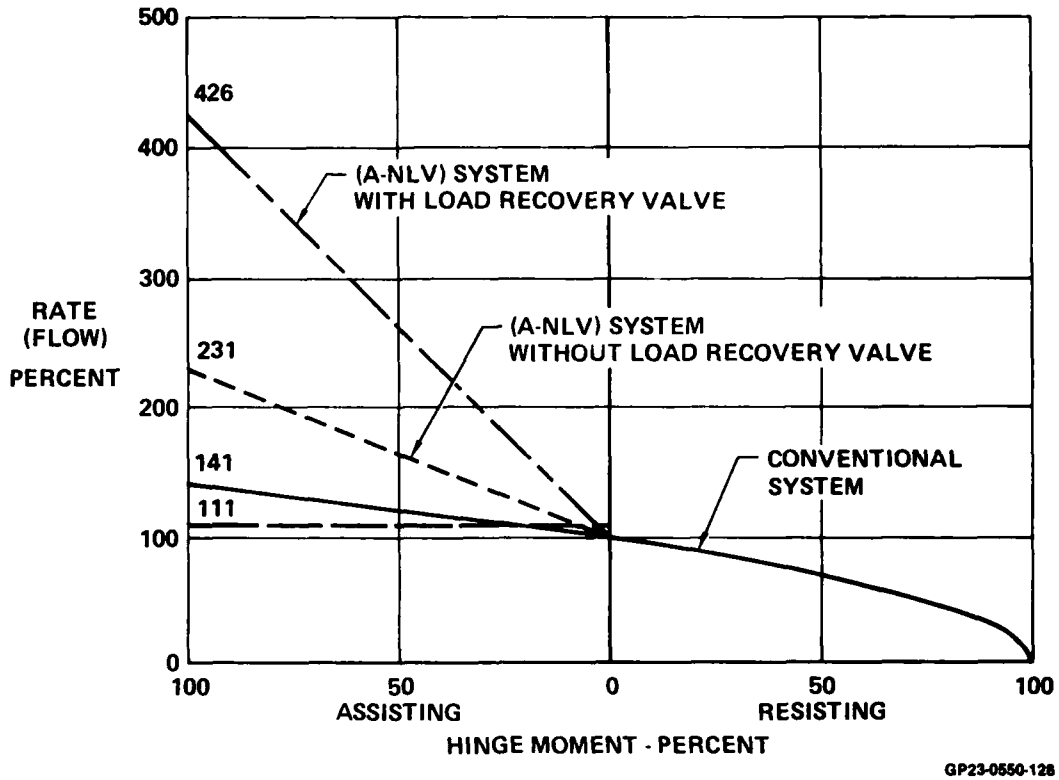

Figure 183.
ASYMMETRIC AND NONLINEAR VALVE SYSTEM (A-NLV)
IMPACT ON ASSISTING LOAD PERFORMANCE

2.3.3.2.3 NonLinear Control Valves - The nonlinear control valve is not expected to improve performance. The objective is to maintain acceptable dynamic performance.

2.3.3.2.4 Asymmetric Line Loss - The asymmetric line loss is not expected to imporve basic performance. Weight savings will accrue.

2.3.3.2.5 Local Velocity Reduction - Local velocity reduction will not improve performance. Local velocity reduction, asymmetric line loss, and the nonlinear control valve will combine to control water hammer transients.

	3,000 PSI						8,000 PSI			
	DRY WEIGHT (LB)	FLUID VOLUME (IN.^{3})	FLUID WEIGHT (LB) 5606	WET WEIGHT (LB) 5606	FLUID WEIGHT (LB) CTFE	WET WEIGHT (LB) CTFE	DRY WEIGHT (LB)	FLUID VOLUME (IN.^{3})	FLUID WEIGHT (LB) CTFE	WET WEIGHT (LB) CTFE
NOSE LANDING GEAR										
ACTUATOR										
UPLOCK	3.30	4.58	0.14	3.44	0.29	3.59	3.18	2.66	0.17	3.35
RETRACT	8.10	46.08	1.41	9.51	2.95	11.05	8.16	25.31	1.62	9.78
STEERING AND DAMPER	19.80						19.80			
VALVES										
	0.30						0.30			
	6.70						6.70			
	1.30						1.17			
	1.30						1.17			
MISCELLANEOUS	0.20						0.20			
OTHER	0.90	(14.71)	(0.45)	(30.95)	0.94	(31.44)	0.90	(6.09)	(0.39)	(30.63)
TOTAL	41.90	65.37	2.00	43.90	4.18	46.08	41.58	34.06	2.18	43.76
EMERGENCY GENERATOR										
VALVE	4.70	9.80	0.30	5.00	0.63	5.33	4.32	4.06	2.60	4.58
TOTAL	4.70	9.80	0.30	5.00	0.63	5.33	4.32	4.06	2.60	4.58
GUN SYSTEM										
VALVE										
GUN FLOW REGULATOR	2.60	16.34	0.50	3.10	1.05	3.65	2.34	6.72	0.43	2.77
OTHER	0.10			0.10		0.10	0.10			0.10
TOTAL	2.70	16.34	0.50	3.20	1.05	3.75	2.44	6.72	0.43	2.87

GP23-0550-214

Figure 194. (Continued)
F-15 COMPONENT WEIGHT BREAKDOWN BY SUBSYSTEM

	3,000 PSI						8,000 PSI			
	DRY WEIGHT (LB)	FLUID VOLUME (IN.^{3})	FLUID WEIGHT (LB) 5606	WET WEIGHT (LB) 5606	FLUID WEIGHT (LB) CTFE	WET WEIGHT (LB) CTFE	DRY WEIGHT (LB)	FLUID VOLUME (IN.^{3})	FLUID WEIGHT (LB) CTFE	WET WEIGHT (LB) CTFE
CANOPY										
ACTUATOR										
MAIN	4.85	21.57	0.66	5.51	1.38	6.23	5.31	8.44	0.54	5.85
LOCK	1.60	3.59	0.11	1.71	0.23	1.83	1.54	2.03	0.13	1.67
OTHER	0.35						0.35			
VALVE	3.70						3.33			
MISCELLANEOUS										
ACCUMULATOR	3.45	37.91	1.16	4.61	2.43	5.88	3.47	14.22	0.91	4.38
OTHER	0.35			(4.40)		4.40	0.35			(4.03)
TOTAL	14.30	63.97	1.93	16.23	4.04	18.34	14.35	24.69	1.58	15.93
JET FUEL STARTER										
VALVE										
JFS MANIFOLD	6.52						6.52			
OTHER	1.28						1.28			
MISCELLANEOUS										
JFS HAND PUMP	3.00						3.00			
ACCUMULATOR	52.33	289.87	8.87	61.20	18.55	70.88	35.98	112.03	7.17	43.14
OTHER	2.47	(89.2[illegible])	(2.73)	(16.00)	(5.71)	18.98	2.47	36.88	(2.36)	(15.63)
TOTAL	65.60	379.09	11.60	77.20	24.26	89.86	49.25	148.91	9.53	58.77
AERIAL REFUEL RECEPTACLE										
ACTUATOR	1.60	3.27	0.10	1.70	0.21	1.81	1.54	1.88	0.12	1.66
VALVE	3.40			3.40		3.40	3.06			3.06
TOTAL	5.00	3.27	0.10	5.10	0.21	5.21	4.60	1.88	0.12	4.72

GP23-0550-215

Figure 194. (Continued)
F-15 COMPONENT WEIGHT BREAKDOWN BY SUBSYSTEM

	3,000 PSI						8,000 PSI			
	DRY WEIGHT (LB)	FLUID VOLUME (IN.^{3})	FLUID WEIGHT (LB) 5606	WET WEIGHT (LB) 5606	FLUID WEIGHT (LB) CTFE	WET WEIGHT (LB) CTFE	DRY WEIGHT (LB)	FLUID VOLUME (IN.^{3})	FLUID WEIGHT (LB) CTFE	WET WEIGHT (LB) CTFE
HYDRAULIC PC-1 AND PC-2										
VALVE										
TEMPERATURE REGULATOR	3.00	30.07	0.92	3.92	1.92	4.92	4.08	12.50	0.80	4.88
OTHER	0.40						0.40			
MISCELLANEOUS										
PUMP	52.96	193.46	5.92	58.88	12.38	65.34	43.60	133.91	8.57	52.17
RESERVOIR	30.40	474.84	14.53	44.93	30.39	60.79	22.16	209.96	13.38	35.53
OTHER	40.44	(60.46)	(1.85)	42.69	(3.87)	44.71	40.44	(25.00)	(1.60)	(42.44)
SUBTOTAL	127.2	758.83	23.22	150.42	48.56	175.76	110.86	380.47	24.35	135.03
TOTAL	943.0	3,274.51	100.20	1,043.20	209.60	1.152.57	857.73	1,549.69	99.18	958.89

GP23-0550-217

Figure 194. (Continued)

F-15 COMPONENT WEIGHT BREAKDOWN BY SUBSYSTEM

Notes:

1. Nose landing gear retract actuator 8,000 psi estimate is a ratio based on main landing gear retract actuator 8,000 vs 3,000 weights.
2. Nose landing gear uplock, main landing gear uplock, canopy lock, arresting hook uplatch, and ECS actuators are all estimated at 8,000 psi using a ratio based on similarly proportioned aerial refueling receptacle actuator.
3. Nose landing gear fluid volume based on MLG calculated vs actual volume for both 3,000 and 8,000 psi estimates.
4. Control Stick Boost and Pitch Compensator (CSBPC) dry and fluid weights listed among area and stroke calculation, with an ullage factor based on aileron, rudder, and stabilator subsystems. Increased subsystem fluid weight reflected in decreased fluid weight in hydraulic utility and in hydraulic PC-1 and PC-2 subsystems.
5. Solenoid valve 8,000 to 3,000 psi weight ratio used arresting hook uplatch, canopy, ARR, speedbrake, MLG, NLG and ECS valves.
6. Emergency generator valve 8,000 psi weight estimate ratio per switching valve 8,000 to 3,000 psi designs.
7. Statistically estimated fluid weights at 8,000 based on 3/8 of 3,000 psi volume plus a 10% ullage factor.
8. Extra fluid in JFS 3,000 psi subsystem subtracted from hydraulic utilities subsystem weights.
9. Number is parenthesis in table represent single estimate for several rows of previous columns.
10. Weight estimates for pumps at 8,000 made with ABEX supplied design curves.
11. Weight estimates are per aircraft.

GP23-0550-218

Figure 194. (Concluded)
F-15 COMPONENT WEIGHT BREAKDOWN BY SUBSYSTEM

	3,000 PSI							8,000 PSI				
	DRY WEIGHT (LB)	FLOW CIPR	FLUID VOLUME (IN.^{3})	FLUID WEIGHT (LB) 5606	WET WEIGHT (LB) 5606	FLUID WEIGHT (LB) CTFE	WET WEIGHT (LB) CTFE	DRY WEIGHT (LB)	FLOW CIPR	FLUID VOLUME (IN.^{3})	FLUID (LB) CTFE	WET WEIGHT (LB) CTFE
EMERGENCY GENERATOR MOTOR	9.60	0.48	4.70	0.14	9.74	0.30	9.90	8.20	0.18	3.10	0.20	8.40
JFS START	4.50	0.16	4.30	0.13	4.63	0.28	4.78	4.10	0.06	3.00	0.20	4.30
GUN DRIVE	14.80	0.95	5.20	0.16	14.96	0.33	15.13	12.80	0.36	3.30	0.21	13.01
TOTAL	28.90	1.59	14.20	0.43	29.33	0.91	29.81	25.10	0.60	9.40	0.61	25.71

GP23-0550-173

Figure 195.
F-15 HYDRAULIC EQUIPMENT NOT DETAILED IN SUBSYSTEM SUMMARY

	WEIGHT - LB		
	3,000 PSI	PRELIMINARY 8,000 PSI	FINAL 8,000 PSI
FLIGHT CONTROL ACTUATORS	1,238	1,217	1,182
UTILITY ACTUATORS	837	709	899
MISCELLANEOUS COMPONENTS	1,593	1,502	1,474(1)
DISTRIBUTION SYSTEM	1,288	763	673
FLUID - CTFE	2,300	1,196	908
TOTALS	7,256	5,387	5,136

GP23-0550-174

Notes:
(1) Heat exchangers added 91 lb total

Figure 196.
KC-10A WEIGHT SUMMARY

PART NO. AND NAME	WEIGHT (DRY) (LB)		FLUID WEIGHT (LB)		NO. ON A/C	TOTAL WEIGHT (LB)	
	3.000 PSI	8.000 PSI	3.000 PSI	8.000 PSI		3.000 PSI	8.000 PSI
DAMPER ELEVATOR INBOARD ALG 7024-507	(9.54) 19.08	(8.44) 16.88	(0.44) 0.88	(0.37) 0.74	2	19.96	17.62
DAMPER ELEVATOR OUTBOARD ALG 7051-507	(8.37) 16.74	(7.41) 14.82	(0.59) 1.18	(0.50) 1.00	2	17.92	15.82
ACTUATOR ELEVATOR INBOARD BLG 7004-519	(125.78) 251.56	(117.59) 235.18	(4.36) 8.72	(3.57) 7.14	2	260.28	242.32
ACTUATOR ELEVATOR OUTBOARD BLG 7005-519	(101.00) 202.00	(92.43) 184.86	(2.86) 5.72	(1.96) 3.92	2	207.72	188.78
ACTUATOR RUDDER UPPER BMG 7000-505	77.46	79.59	2.08	1.74	1	79.54	81.33
ACTUATOR RUDDER LOWER BMG 7000-509	81.50	83.36	1.71	1.43	1	82.93	84.79
FUEL BOOM RUDDER ACTUATOR A22322-1	(25.85) 51.70	(25.09) 50.18	(0.1) 0.2	(0.7) 0.14	2	51.90	50.32
FUEL BOOM ELEVATOR ACTUATOR A22321-1	53.24	48.66	1.38	1.37	1	54.62	50.03
ACTUATOR AILERON INBOARD BRG 0001-5517	(98.89) 197.78	(92.19) 184.38	(4.72) 9.44	(3.87) 7.74	2	207.22	192.06
ACTUATOR AILERON OUTBOARD BRG 0002-5509	(47.00) 94.00	(48.74) 97.48	(2.06) 4.12	(1.68) 3.36	2	98.12	100.84
DAMPER AILERON OUTBOARD ARG 7231-509	9.71 19.42	8.59 17.18	0.79 1.58	0.66 1.32	2	21.00	18.76
ACTUATOR SPOILER BRG 0003-5511	(13.50) 135.00	(13.12) 131.20	(0.50) 5.00	(0.50) 5.00	10	140.00	136.20
ACTUATOR (SYSTEM) SPOILER BOOST AYG 7091-505	(19.50) 39.00	(19.12) 38.24	(1.57) 3.14	(1.30) 2.60	2	42.14	40.84
TOTAL	1,238.40	1,182.20	45.10	37.50		1,283.40	1,219.70

GP23-0550-109

Note

3,000 psi system fluid is MIL-H-5606

8,000 psi system fluid is A02

Figure 197.

KC-10A COMPONENT WEIGHT BREAKDOWN BY TYPE

Flight Control Cylinders

PART NO. AND NAME	WEIGHT (DRY) (LB)		FLUID WEIGHT (LB)		NO. ON A/C	TOTAL WEIGHT (LB)	
	3.000 PSI	8.000 PSI	3.000 PSI	8.000 PSI		3.000 PSI	8.000 PSI
RETRACT CYL. NOSE GEAR ACG 7401-1	23.00	24.75	4.04	3.31	1	27.04	28.06
UNLOCK CYL. NOSE GEAR ACG 7330-501	3.96	3.67	0.16	0.13	1	4.12	3.80
STEERING CYL. NOSE GEAR ACG 7440-501	(23.24) 46.48	(23.30) 46.60	(2.94) 5.88	(2.41) 4.82	2	52.36	51.42
CARGO DOOR CYL. ACG 7301-1	68.03	65.43	2.54	2.08	1	70.57	67.51
CONTROL ASSY. CARGO DOOR ACG 7258-1	2.39	2.30	0.29	0.27	1	2.68	2.57
TAIL CONE CYL. ARG 7432-1	17.36	18.37	2.65	2.17	1	20.01	20.54
FLAP ACTUATOR BRG 0007-500	(21.06) 84.24	(25.54) 102.16	(0.77) 3.08	(0.63) 2.42	4	87.32	104.68
SLAT ACTUATOR INBOARD BRG 0010-5513	(21.60) 43.20	(24.09) 48.18	(2.50) 5.00	(2.11) 4.22	2	47.42	52.40
FLAP ACTUATOR BRG 0009-5001	(20.50) 82.00	(24.86) 99.44	(0.67) 2.68	(0.55) 2.20	4	84.68	101.64
SLAT ACTUATOR INBOARD DRIVE BRG 0011-5503	(25.50) 51.00	(28.30) 56.60	(3.30) 6.60	(2.73) 5.46	2	57.60	62.06

GP23-0560-230

Note:

3.000 psi system fluid is MIL-H-5606

8.000 psu system fluid is A02

Figure 197. (Continued)

KC-10A COMPONENT WEIGHT BREAKDOWN BY TYPE

Utility Cylinders

PART NO. AND NAME	WEIGHT (DRY) (LB)		FLUID WEIGHT (LB)		NO. ON A/C	TOTAL WEIGHT (LB)	
	3.000 PSI	8.000 PSI	3.000 PSI	8.000 PSI		3.000 PSI	8.000 PSI
SLAT ACTUATOR OUTBOARD BRG 0012-5501	(27.50) 55.00	(30.47) 60.94	(3.49) 6.98	(2.86) 5.72	2	61.98	66.66
TRIM CYL. MAIN GEAR ARG 7076-511	(41.97) 83.94	(42.65) 85.30	(2.98) 5.96	(2.45) 4.90	2	89.90	90.20
RETRACT CYL. MAIN GEAR ARG 7376-507	(94.99) 189.98	(99.20) 198.40	(24.18) 48.36	(19.87) 39.74	2	238.34	238.14
DOOR CYL. MAIN GEAR ARG 7432-1	(17.36) 34.72	(18.37) 36.74	(2.65) 5.30	(2.17) 4.34	2	4.86	4.90
LATCH CYL. MAIN GEAR ARG 7246-501	(2.13) 4.26	(2.19) 4.38	(0.21) 0.42	(0.19) 0.38	2	4.68	4.76
LOCK CYL. CENTER GEAR AYG 7219-1	4.68	4.65	0.28	0.27	1	4.96	4.92
RETRACT CYL. CENTER GEAR AYG 7224-1	37.00	36.25	3.49	4.97	1	40.49	41.22
LOCK CYL. MAIN GEAR 3914016-505	(2.20) 4.40	(2.24) 4.48	(0.23) 0.46	(0.21) 0.42	2	4.86	4.90
TOTAL	836.90	898.70	104.30	88.00		941.60	986.70

GP23-0550-231

Note:
3,000 psi system fluid is MIL-H-5606
8,000 psi system fluid is A02

Figure 197. (Continued)
KC-10A COMPONENT WEIGHT BREAKDOWN BY TYPE
Utility Cylinders

PART NO. AND NAME	WEIGHT (DRY) (LB)		FLUID WEIGHT (LB)		NO. ON A/C	TOTAL WEIGHT (LB)	
	3.000 PSI	8.000 PSI	3.000 PSI	8.000 PSI		3.000 PSI	8.000 PSI
MANIFOLD NOSE GEAR ACG 7170-5501	0.63	0.50	0.20	0.25	1	0.83	0.75
MANIFOLD ASSY. SYSTEM NO. 1 AND NO. 2 AJG 7011-521	(23.02) 46.04	(17.02) 34.04	(2.16) 4.32	(2.15) 4.30	2	50.36	38.34
MANIFOLD ANTISKID 6000745	(11.29) 22.58	(9.29) 18.58	(2.55) 5.10	(2.03) 4.06	2	27.68	22.64
MANIFOLD ANTISKID 6001078	(19.39) 77.56	(16.39) 65.56	(3.02) 12.08	(2.72) 10.88	4	89.64	76.44
MODULE A HYD. INSTL - NEUTRAL ASG 0014-5527	(24.00) 48.00	(17.50) (35.00)	(2.75) 5.50	(2.25) 4.50	2	53.50	39.50
MANIFOLD HYD. SYSTEM NO. 1 AJG 7011-523	24.50	19.71	2.16	1.59	1	27.56	21.30
MANIFOLD HYD. SYSTEM NO. 3 AYG 7055-513	33.02	23.24	3.05	2.46	1	36.07	25.70
MANIFOLD AC MOTOR PUMP AYG 7095-505	11.55	8.55	2.38	2.50	1	13.93	11.05
MANIFOLD REV. MOTOR PUMP AYG 7430-1	1.22	0.90	0.25	0.25	1	1.47	1.15
MANIFOLD AYK 7145-1	(0.55) 1.10	(0.44) 0.88	(0.02) 0.04	(0.02) 0.04	2	1.14	0.92
AIR ELIMINATOR AD-A402-8	(3.58) 10.74	(2.78) 8.34	(0.81) 2.43	(0.50) 1.50	3	13.17	9.84
TOTAL	277.80	215.30	37.50	32.30		315.40	247.60

GP23-0550-235

Note:

3,000 psi system fluid is MIL-H-5606

8,000 psi system fluid is A02

Figure 197. (Continued)

KC-10A COMPONENT WEIGHT BREAKDOWN BY TYPE

Manifolds

PART NO. AND NAME	WEIGHT (DRY) (LB)		FLUID WEIGHT (LB)		NO. ON A/C	TOTAL WEIGHT (LB)	
	3.000 PSI	8.000 PSI	3.000 PSI	8.000 PSI		3.000 PSI	8.000 PSI
CONTROL VALVE STEERING ACG 7130-5505	7.21	7.21	0.32	0.26	1	7.53	7.47
BYPASS VALVE ACG 7164-5001	7.53	7.53	0.32	0.26	1	7.83	7.79
CARGO DOOR CONTROL VALVE ACG 7286-1	5.03	5.03	0.20	0.16	1	5.23	5.19
FUEL MOTOR VALVE FWD TANKS 63990-2	(9.12) 36.48	(5.90) 23.60	(0.79) 3.16	(0.65) 2.60	4	39.64	26.20
FUEL MOTOR VALVE AFT TANKS 63980	25.94	22.05	1.97	1.63	1	27.91	23.68
BOOM DROGUE SELECTOR VALVE 148995	2.11	2.00	—	—	1	2.11	2.00
PRIMARY VALVE HORIZ. STABILIZER AJG 7041-533	(27.84) 55.68	(24.97) 49.94	(0.74) 1.48	(0.61) 1.22	2	57.16	51.16
FIRE SHUTOFF 148885	1.86	1.50	0.32	0.26	1	2.18	1.76
TAIL CONE CONTROL VALVE 5917267	2.12	2.12	0.40	0.33	1	2.52	2.45
STEERING VALVE 63970	4.70	4.70	0.63	0.52	1	5.33	5.22

GP23-0550-232

Figure 197. (Continued)
KC-10A COMPONENT WEIGHT BREAKDOWN BY TYPE
Control Valves

PART NO. AND NAME	WEIGHT (DRY) (LB)		FLUID WEIGHT (LB)		NO. ON A/C	TOTAL WEIGHT (LB)	
	3.000 PSI	8.000 PSI	3.000 PSI	8.000 PSI		3.000 PSI	8.000 PSI
SLAT VALVE APG 7000-5503	(6.26) 18.78	(6.26) 18.78	(0.79) 2.37	(0.65) 1.95	3	21.15	20.73
SLAT VALVE APG 7002-5001	(1.07) 2.14	(1.07) 2.14	—	—	2	2.14	2.14
FUEL MOTOR CONTROL 63990-1	(8.90) 17.80	(5.79) 11.58	(0.79) 1.58	(0.65) 1.30	2	19.38	12.88
HYD. INSTL. NEUT. 343196	(3.93) 20.88	(3.51) 21.06	(0.19) 1.14	(0.15) 0.90	6	24.72	21.96
BRAKE CONTROL VALVE BYG 7004	(12.82) 25.64	(8.58) 17.16	(0.79) 1.58	(0.65) 1.30	2	27.22	18.46
REV. MOTOR/ PUMP VALVE 340125	(4.60) 18.40	(3.91) 15.64	—	—	4	18.40	15.64
FLAP LOCK VALVE AYG 7323-509	(2.54) 7.62	(2.19) 6.57	(0.10) 0.30	(0.08) 0.24	3	7.92	6.81
FLAP VALVE ASSY. AYG 7030-507	(6.64) 19.92	(6.64) 19.92	(0.79) 2.37	(0.65) 1.95	3	22.29	21.87
MAIN GEAR VALVE AYG 7050-507	47.90	27.90	2.25	1.88	1	50.15	29.78
GEAR CONTROL VALVE SELECT 3413175	4.52	4.39	0.20	0.16	1	4.72	4.55
HYD. BRAKE VALVE AJG 7005-501	(5.94) 11.88	(5.73) 11.46	(1.73) 3.46	(1.67) 3.34	2	15.34	14.80
TOTAL	344.10	282.20	24.10	20.30		368.20	302.50

GP23-0550-233

Figure 197. (Continued)
KC-10A COMPONENT WEIGHT BREAKDOWN BY TYPE
Control Valves

PART NO. AND NAME	WEIGHT (DRY) (LB)		FLUID WEIGHT (LB)		NO. ON A/C	TOTAL WEIGHT (LB)	
	3.000 PSI	8.000 PSI	3.000 PSI	8.000 PSI		3.000 PSI	8.000 PSI
CARGO DOOR ACG 7371-1	2.75	1.99	4.88	5.37	1	7.63	7.36
COMPENSATOR 343211-1	(15.00) 30.00	(16.09) 32.18	(3.72) 7.44	(3.06) 6.12	2	37.44	38.30
RESERVOIR SYSTEM NO. 2 ATG 7027-553	62.90	61.21	30.54	43.65	1	93.44	104.86
RESERVOIR FUEL BOOM 343241-2	50.00	49.83	6.14	5.03	1	56.14	54.86
RESERVOIR SYSTEM NO. 3 AYG 7027-539	62.72	60.63	35.14	54.27	1	97.86	114.90
RESERVOIR SYSTEM NO. 1 AYG 7027-545	63.31	61.21	35.14	54.27	1	98.45	115.48
TOTAL	271.70	267.10	119.30	168.70		391.00	435.80

Note:

3,000 psi system fluid is MIL-H-5606

8,000 psi system fluid is A02

GP23-0550-237

Figure 197. (Continued)
KC-10A COMPONENT WEIGHT BREAKDOWN BY TYPE
Reservoirs

PART NO. AND NAME	WEIGHT (DRY) (LB)		FLUID WEIGHT (LB)		NO. ON A/C	TOTAL WEIGHT (LB)	
	3.000 PSI	8.000 PSI	3.000 PSI	8.000 PSI		3.000 PSI	8.000 PSI
ENGINE PUMPS BSG 7000-5523	(25.30) 151.80	(21.60) 130.80	(1.82) 10.92	(1.46) 8.76	6	162.72	139.56
MOTOR PUMP 283554	12.50	11.00	0.72	1.26	1	13.22	12.26
SERVO MOTOR FUEL — FWD TANKS — AFT TANKS 63115-01	(21.10) 128.60	(19.10) 114.60	(1.67) 10.02	(2.94) 17.64	6	136.62	132.24
MOTOR PUMP NONREVERSING BJG 7001-501	(16.70) 33.40	(15.20) 30.40	(1.07) 2.14	(1.88) 3.76	2	35.54	34.16
MOTOR WINCH FUEL BOOM AJG 7098-1	23.76	19.76	1.67	2.94	1	25.34	22.70
MOTOR WINCH FUEL BOOM AJG 7098-501	24.44	20.44	1.75	3.07	1	26.19	23.51
MOTOR HORIZONTAL DRIVE BJG 7000-507	(11.50) 23.00	(10.10) 20.20	(0.65) 1.30	(1.14) 2.28	2	24.30	22.48
SERVO MOTOR FUEL BOOM AQG 7014-1	30.62	26.62	1.70	2.99	1	32.52	29.61
AUX. MOTOR PUMP AYG 7093-1	(32.02) 64.04	(27.52) 55.04	(2.38) 4.76	(4.17) 8.34	2	68.80	63.38
REVERSIBLE PUMP BYG 7001-513	(54.50) 109.00	(50.00) 100.00	(1.81) 3.62	(3.15) 6.30	2	112.62	106.30
TOTAL	599.16	528.35	38.60	57.34		637.67	586.20

GP23-0550-234

Note:

3,000 psi system fluid is MIL-H-5606

8,000 psi system fluid is A02

Figure 197. (Continued)

KC-10A COMPONENT WEIGHT BREAKDOWN BY TYPE

Rotating Equipment

PART NO AND NAME	WEIGHT (DRY) (LB)		FLUID WEIGHT (LB)		NO. ON A/C	TOTAL WEIGHT (LB)	
	3.000 PSI	8.000 PSI	3.000 PSI	8.000 PSI		3.000 PSI	8.000 PSI
RELIEF VALVE BCG 7002-501	(1.20) 2.40	(1.05) 2.10	(0.13) 0.26	(0.11) 0.22	2	2.66	2.32
GLAND CARGO DOOR 3915180-1	(0.94) 1.88	(0.94) 1.88	—	—	2	1.88	1.88
GLAND CARGO DOOR D10056-4	(0.28) 0.56	(0.28) 0.56	—	—	2	0.56	0.56
MECH OPERATOR 13200-5001	0.70	0.70	—	—	1	0.70	0.70
DRAIN TANK 70821	0.50	0.38	0.12	0.11	1	0.62	0.49
X-MITTER RESERVOIR NO. 2 7913684-1	0.61	0.61	—	—	1	0.61	0.61
GLAND ASSY. BOOM SWIVEL AQG 7010-1	1.93	1.75	—	—	1	1.93	1.75
ATTENUATOR ASG 7010-1	(1.15) 6.90	(1.09) 6.54	(0.13) 0.78	(0.11) 0.66	6	7.68	7.20
PRESS. SWITCH HYD. PANEL 1105P24-1	(0.38) 4.56	(0.38) 4.56	—	—	12	4.56	4.56
ACCUMULATOR 3180131-2	(11.70) 81.90	(4.82) 33.74	(3.9) 27.30	(3.22) 22.54	7	109.20	56.28
RESERVOIR HAND PUMP 681227	2.75	2.17	12.13	13.34	1	14.88	15.51
HAND PUMP 3180200	3.00	2.25	0.79	0.73	1	3.79	2.98
GLAND ℄ GEAR 3915180-1	(0.94) 1.88	(0.94) 1.88	—	—	2	1.88	1.88
PRESS. GAGE ACCUMULATOR 4647303-501	(0.14) 0.98	(0.14) 0.98	—	—	7	0.98	0.98
TOTAL	110.55	61.10	41.38	37.60		151.93	98.70

GP23-0550-236

Note

3.000 psi system fluid is MIL-H-5606

8.000 psi system fluid is A02

Figure 197. (Concluded)

KC-10A COMPONENT WEIGHT BREAKDOWN BY TYPE

Miscellaneous

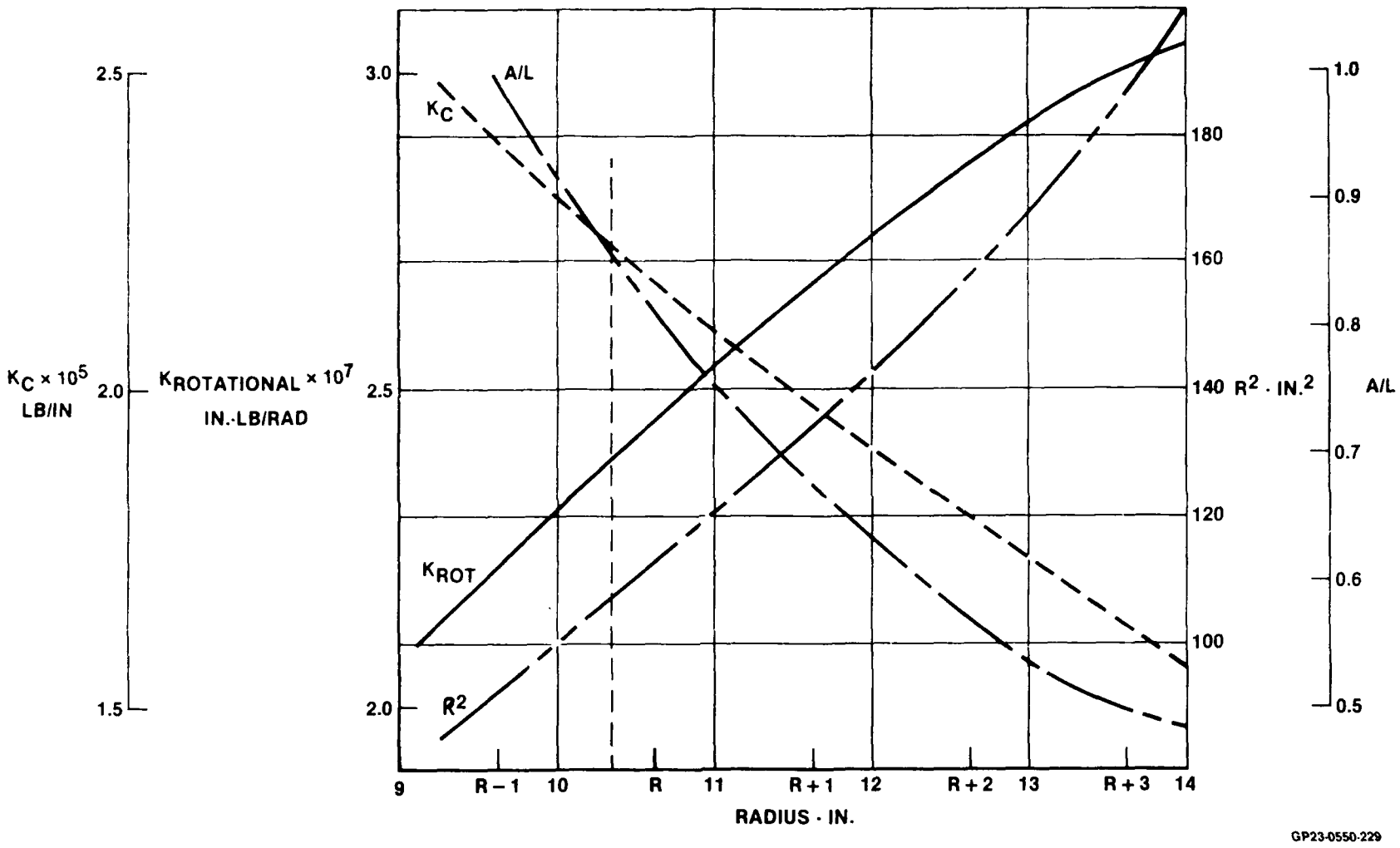

Figure 217.
F-15 STABILATOR 3,000 PSI ACTUATOR
SPRING RATE

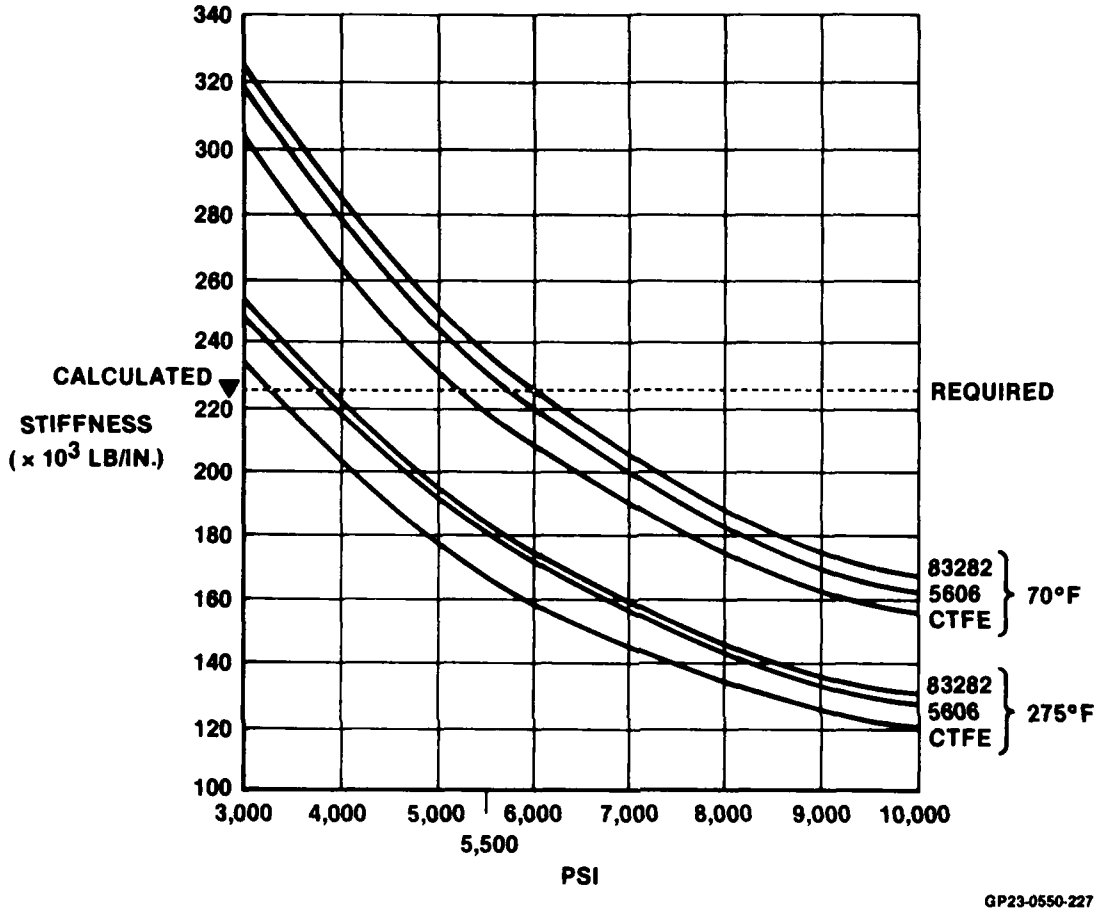

Figure 216.
F-15 STABILATOR INFINITE FREQUENCY STIFFNESS

Figure 217 is a compound graph illustrating the 3000 psi F-15 stabilator actuator spring rate as a function of flight surface moment arm length. Also shown are the impacts on the flight surface rotational stiffness, the square of the radius arm, and the ratio of the area to the length.

Figure 215 details the F-15 stabilator actuator spring constants obtained by increasing the piston area at 8000 psi beyond required force levels to meet the stiffness requirements. Also illustrated are the spring rates required by the flight surface and those available from an 8000 psi design based on force levels alone. No operating geometry was changed, other than the usage of trunnion rather than clevis mounted actuators.

	1.5 × AREA(2)		1.44 × AREA(2)		1.375 × AREA(2)		1.25 × AREA(2)	
SPRING (SEE FIGURES 209 AND 210)	TRUNNION LB/IN.	CLEVIS LB/IN.	TRUNNION LB/IN.	CLEVIS LB/IN.	TRUNNION LB/IN.	CLEVIS LB/IN.	TRUNNION LB/IN.	CLEVIS LB/IN.
$K_{CYLINDER}$(1)	249,000	228,000	239,000	219,000	230,000	209,000	211,000	190,000
K_{OIL}	406,000	388,000	389,000	370,000	370,000	350,000	334,000	312,000
K_{MECH}	643,000	552,000	624,000	537,000	608,000	520,000	576,000	485,000
$K_{CYLINDER}$(2) BASELINE 8,000 PSI DESIGN	168,000	141,000	168,000	141,000	168,000	141,000	168,000	141,000
$K_{CYLINDER}$(3) REQUIRED	201,000	225,000	201,000	225,000	201,000	225,000	201,000	225,000

Note:
(1) Actual cylinder spring constant - total of mechanical and oil spring rates.
(2) Valves for the 8,000 PSI design based on required output force levels alone. ('Area' referes to this design.)
(3) Cylinder spring rates required by flight surface and airframe for clevis and trunnion mounted units.

GP23-0550-228

Figure 215.
F-15 STABILATOR SPRING RATE SUMMARY
For Existing Actuator
Airframe Geometry at 8,000 PSI

Results indicate that surface stiffness requirements could be met by either a clevis (pin) mounted actuator of 50% greater piston area than required for output force levels or by a trunnion mounted actuator of 25% greater piston area.

Figure 216 illustrates F-15 stabilator actuator spring constants for various hydraulic fluids, as a function of supply pressure.

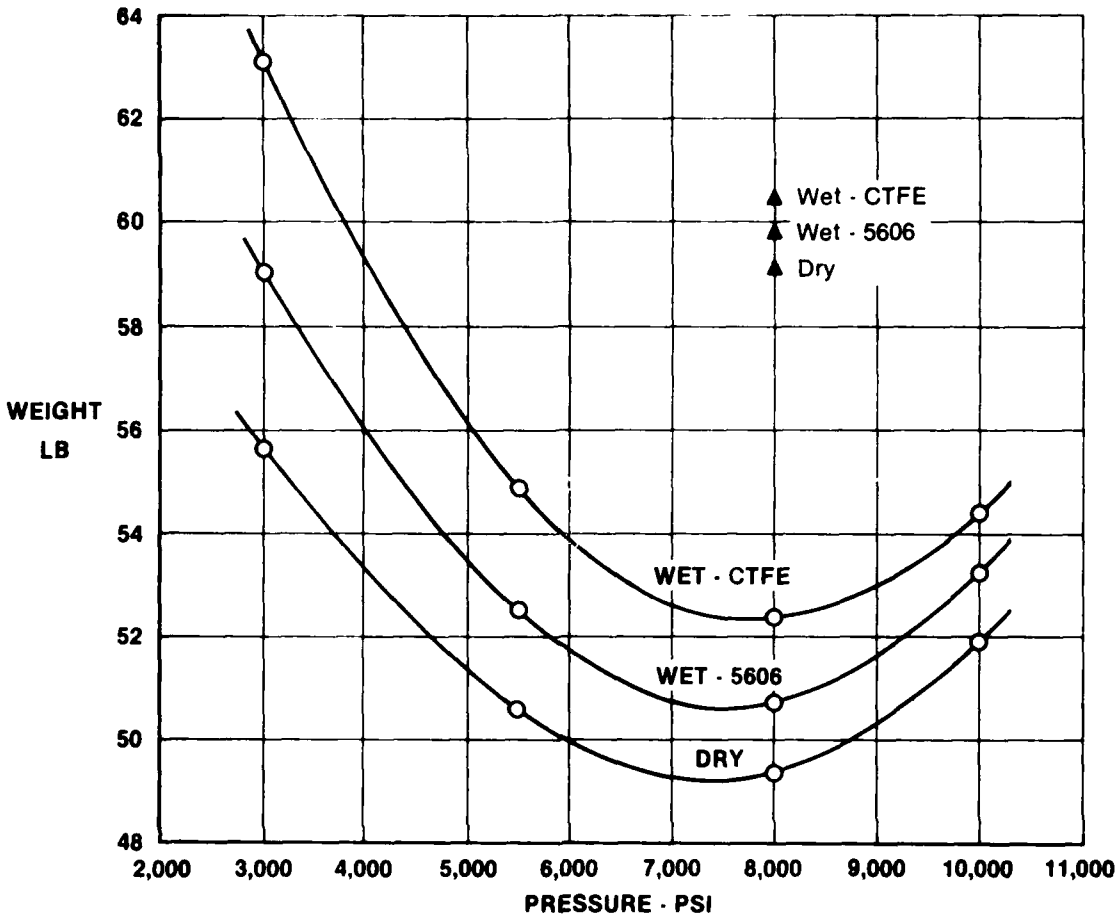

▲ Stiffness critical design

GP23-0550-183

Figure 213.
HIGH PRESSURE HYDRAULIC STUDY
F-15 STABILATOR CYLINDER ASSEMBLY
Weight vs Pressure

	DRY WEIGHT - LB			
	NO. PER AIRCRAFT	INITIAL DESIGN	STIFFNESS DESIGN	TOTAL WT PER A/C
STABILATOR (ACTUATOR ONLY)	2	25.70	34.23	+ 17.06

GP23-0550-184

Figure 214.
8,000 PSI STABILATOR STIFFNESS CRITICAL DESIGN
Weight Changes

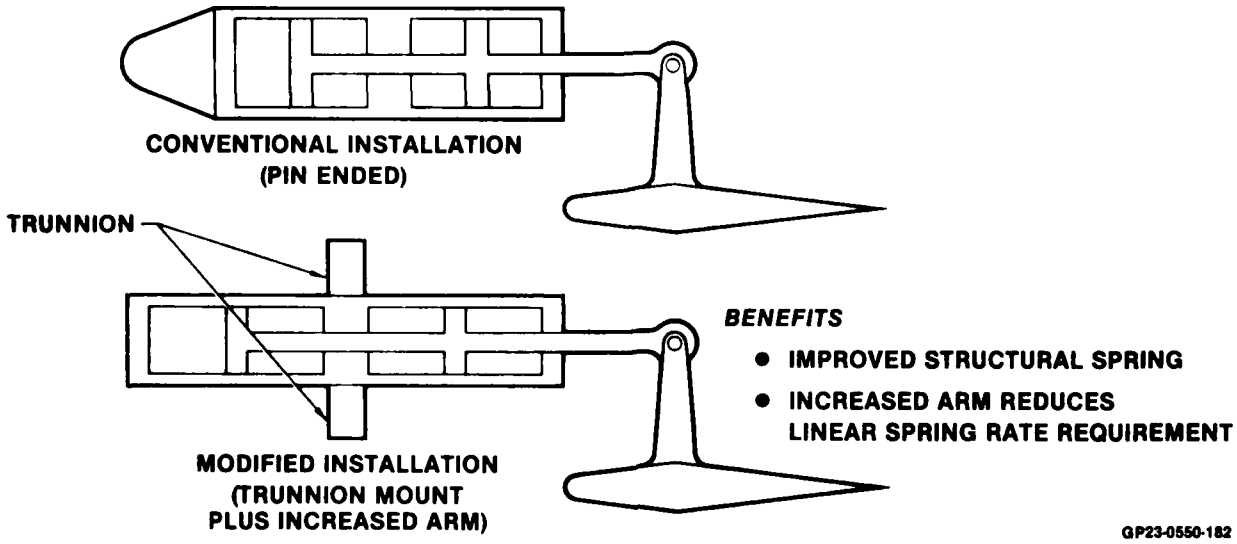

Figure 212.
F-15 STABILATOR INSTALLATIONS
FOR STIFFNESS CONTROL

The production (3000 psi) F-15 stabilator unit was designed with stiffness rather than output force as the limiting factor. Similar factors were encountered for 8000 psi design. The stiffness requirements could be met and optimum stabilator servoactuator weight obtained with a flight surface moment arm increased from 10.616 to 14.00 inch radius (see Figure 211) with the resultant increased actuator stroke (this configuration was used for weight estimate). The existing geometry (pin to pin mounting distance and operating stroke) and stiffness requirements could also be met with a trunnion mounted actuator of 25% greater piston area than required by force levels, or by pin mounted actuator with a 50% larger area than required by force levels (the trunnion design also benefits from reduced stiffness requirements for a shorter load path, see Figure 212). Figure 213 details the weight trends noted at different system pressures, and with Figure 214, illustrates the weight impact of meeting stiffness requirements.

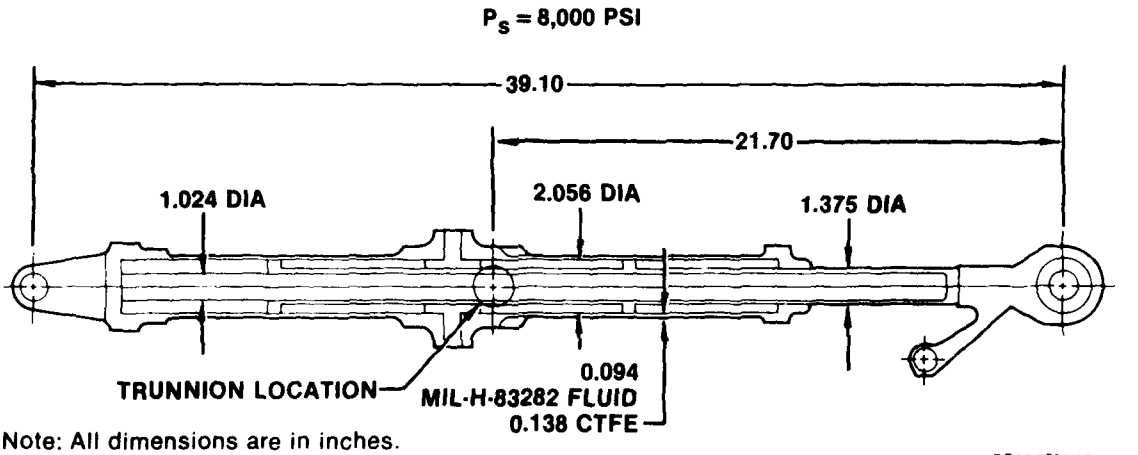

Note: All dimensions are in inches.

GP23-0550-181

Figure 211.
F-15 STABILATOR ACTUATOR STIFFNESS DESIGN R-14 IN.

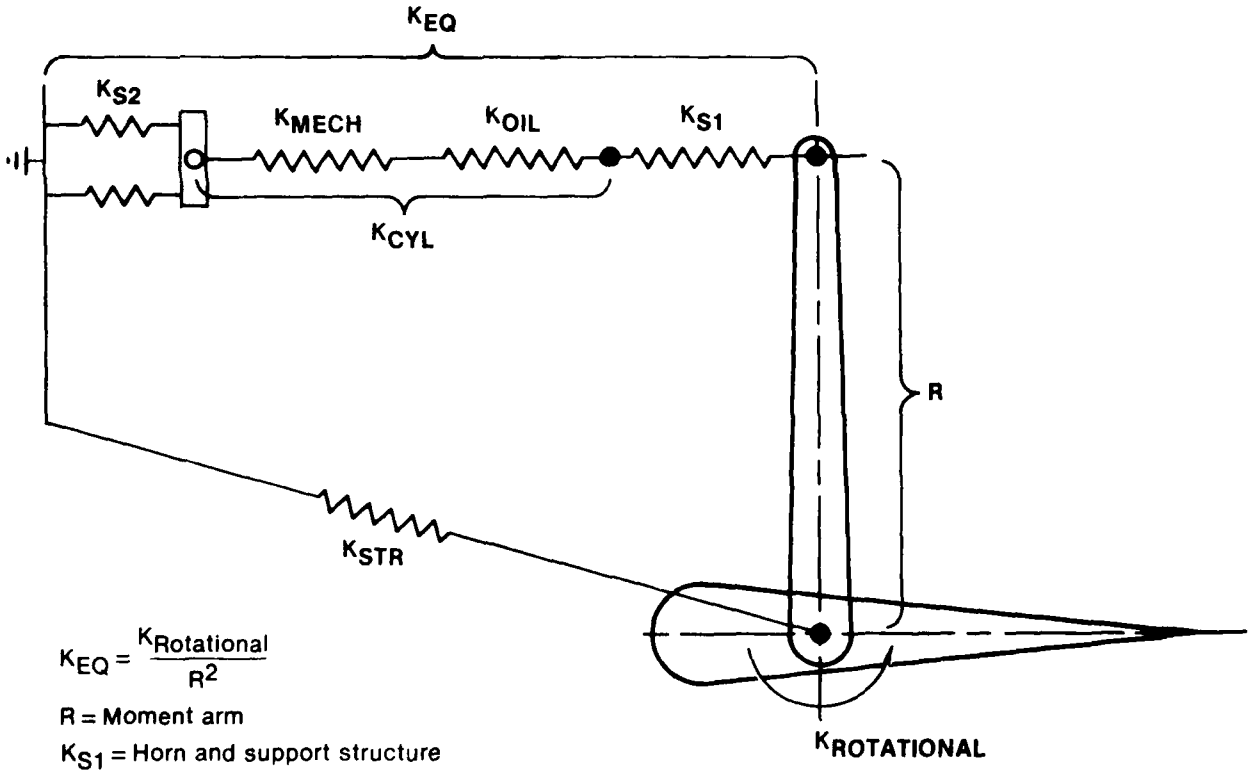

$$K_{EQ} = \frac{K_{Rotational}}{R^2}$$

R = Moment arm

K_{S1} = Horn and support structure

K_{S2} = Trunnion support and bearing (parallel)

K_{CYL} = Total cylinder spring rate

K_{MECH} = Mechanical components

K_{OIL} = Bulk modulus, area and stroke

K_{STR} = Aircraft structure load path

Note:

1. Increased R reduced K_{eq} Requirement
2. Trunnion mounting reduced load path

GP23-0550-180

Figure 210.
F-15 STABILATOR SPRING RATE MODEL
Trunnion Mounting

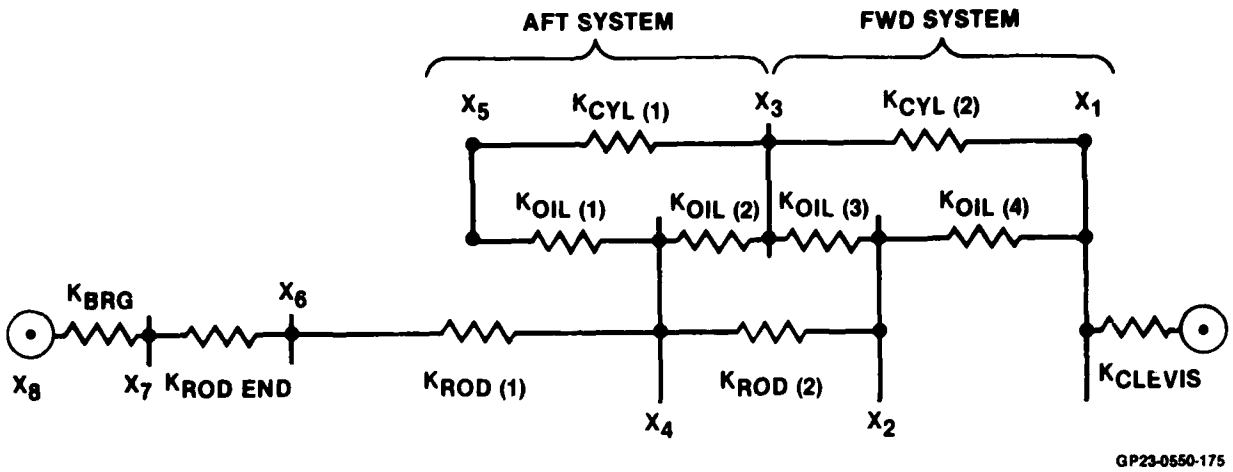

Figure 208.
STABILATOR ACTUATOR STRUCTURAL STIFFNESS MODEL

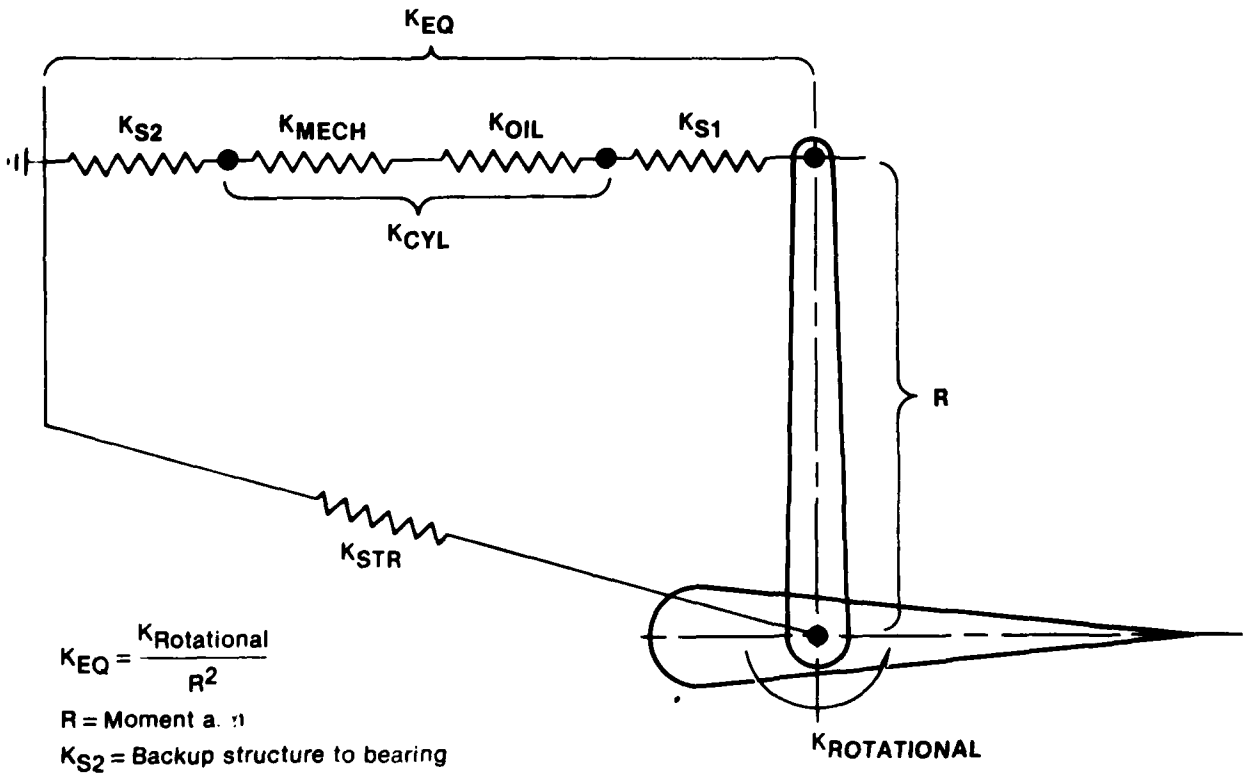

$$K_{EQ} = \frac{K_{Rotational}}{R^2}$$

R = Moment a. :ı
K_{S2} = Backup structure to bearing
K_{S1} = Horn and support structure
K_{CYL} = Total cylinder spring rate
K_{MECH} = Mechanical components
K_{OIL} = Bulk modulus, area and stroke
K_{STR} = Aircraft structure load path

GP23-0550-176

Figure 209.
F-15 STABILATOR SPRING RATE MODEL
Pin Ended

2.3.5.6 Heat Exchanger Requirements - The hydraulic system heat exchanger sizing for the final 8000 psi system design analysis was based on the following ground rules:

- o F-15 and KC-10A Pump heat rejection increased 1.5 times over the production 3000 psi system
- o F-15 System null leakage maintained at the same level as the production 3000 psi system (2.67 times increase in heat rejection)
- o KC-10A System null leakage maintained at 1.5 times the level of the production 3000 psi system. (4 times increase in heat rejection.) The 1.5 factor was used on the KC-10A aircraft since it will accumulate several times the F-15 flying hours.

The 3000 psi and 8000 psi system heat rejection is shown in Figure 207.

	F-15		KC-10A	
	3,000	8,000	3,000	8,000
HYDRAULIC PUMPS				
• F-15 (4 PUMPS)	1,200	1,800	—	-
• KC-10A (6 PUMPS)	—	—	1,500	2,250
NULL LEAKAGE				
• NEW	223	594	600	1,600
• OLD	223	594	900	2,400
TOTAL NEW	1,423	2,394	2,100	3,850
OLD	1,423	2,394	2,400	4,650

GP23-0550-283

Figure 207.
CANDIDATE AIRCRAFT HEAT REJECTION (BTU/MIN)

2.3.5.7 Stabilator Stiffness - Flight surface stiffness is required on critical surfaces to maintain structural integrity and proper aircraft control throughout the flight envelope.

The overall stiffness is a function of the actuator, its connections and the surrounding aircraft structure. Figure 208 shows the contribution of each part of the actuator to the total stiffness (spring constant) between mounting pins. Figure 209 illustrates the stiffness of the actuator and the structure for a pin and clevis mounted unit while Figure 210 details a trunnion mounted actuator. Trunnion mounting at the middle of the actuator shortens the load path to the flight surface and thus increases stiffness compared to the same actuator with an end (clevis) mounting.

	WEIGHT - LB		
	3,000 PSI	PRELIMINARY 8,000 PSI	FINAL 8,000 PSI
FLUID - CTFE	2,300	1,196	908

GP23-0550-260

Figure 205.
KC-10A FLUID WEIGHT SUMMARY

Figure 206 is a summary of the tubing sizes and lengths used on the F-15. At 3000 psi the total internal volume of the tubing is 2227 cubic inches. At 8000 psi the volume is 740 cubic inches. This illustrates again the significance of fluid volume reduction with the 8000 psi configuration. The 8000 psi distribution system volume is reduced to one-third the 3000 psi volume.

TUBE SIZE	3,000 PSI LENGTH (FT)	8,000 PSI LENGTH (FT)
3	—	600
4	459	491
5	—	91
6	598	40
7	—	41
8	111	37
9	—	47
10	34	27
11	—	—
12	91	—
16	65	—
20	16	—

GP23-0550-258

Figure 206.
F-15 TUBING SIZE/LENGTH SUMMARY

	8,000 PSI (LB)	8,000 PSI W/PI (LB)
STABILATOR SERVO ACTUATOR	119.11	103.57
MAIN LANDING GEAR RETRACT	20.74	21.66
DIFFUSER RAMP	30.84	*
BYPASS DOOR	13.64	*

GP23-0550-132

Weights shown are per aircraft.

* Material properties limited piston rod size which limited minimum bore diameter. This minimum size contradicted the benefits of higher pressure.

Figure 203.
WEIGHT ESTIMATES FOR ACTUATORS WITH PRESSURE INTENSIFICATION

2.3.5.5 Fluid Volume/Weight Control - An objective of this program was to minimize the weight penalty of CTFE. A big step was made toward this goal. Figures 204 and 205 show the F-15 and KC-10A fluid weights for the 3000 psi and 8000 psi configurations. The fluid weight and volume are reduced approximately 60% for each aircraft. The F-15 hydraulic system fluid volume is reduced from 23 gallons to 9.6 gallons. The KC-10A hydraulic system volume is reduced from 148 gallons to 59 gallons. This also helps to minimize the cost impact of CTFE which currently is relatively expensive compared to conventional fluids.

	WEIGHT - LB		
	3,000 PSI	PRELIMINARY 8,000 PSI	FINAL 8,000 PSI
FLUID - CTFE	359	187	146

GP23-0550-250

Figure 204.
F-15 FLUID WEIGHT SUMMARY

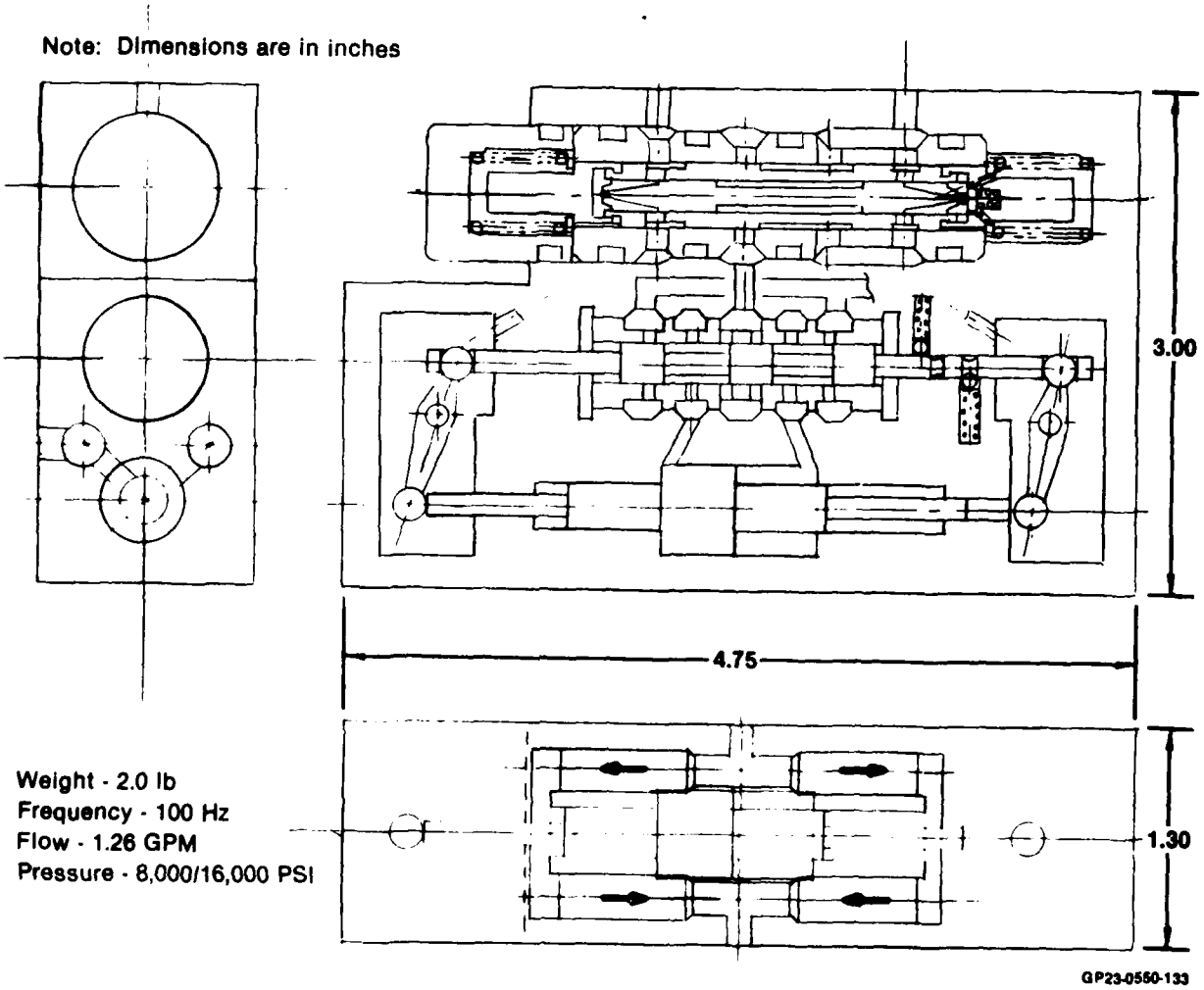

Figure 202.
MCAIR PRESSURE INTENSIFIER

The weight of units redesigned to 16,000 psi peak pressure is shown in Figure 203. Certain components substantially increased in weight at the higher operating pressure as material properties limited minimum rod diameter which, in turn, limited the bore diameter minimum. Cetain design estimates were not completed when a large weight increase became evident.

	WEIGHT - LB		
	3,000 PSI	PRELIMINARY 8,000 PSI	FINAL 8,000 PSI
DISTRIBUTION SYSTEM	220	157	114

GP23-0550-268

Figure 200.
F-15 DISTRIBUTION SYSTEM WEIGHT SUMMARY

	WEIGHT - LB		
	3,000 PSI	PRELIMINARY 8,000 PSI	FINAL 8,000 PSI
DISTRIBUTION SYSTEM	1,288	763	673

GP23-0550-267

Figure 201.
KC-10A DISTRIBUTION WEIGHT SYSTEM

SYSTEM CATEGORY	BASELINE SYSTEM (3,000 PSI, 5606 FLUID)			REDESIGNED SYSTEM (8,000 PSI, A02 FLUID)		
	DRY - LB	FLUID - LB	TOTAL - LB	DRY - LB	FLUID - LB	TOTAL - LB
• FLIGHT	1,238.4	45.1	1,283.5	1,182.2	37.5	1,219.7
• UTILITY	836.9	104.3	941.2	898.7	88.0	986.7
TOTAL ACTUATORS	2,075.3	149.4	2,224.7	2,080.9	125.5	2,206.4
ROTATING ELEMENTS	599.2	38.6	637.8	528.9	57.3	586.2
MANIFOLDS	277.8	37.5	315.3	215.3	32.3	247.6
CONTROL VALVES	344.1	24.1	368.2	282.2	20.3	302.5
RESERVOIRS	271.7	119.3	391.0	267.1	168.7	435.8
HEAT EXCHANGERS	—	—	—	119.0	20.0	139.0
MISCELLANEOUS	110.6	41.4	152.0	61.1	37.6	98.7
TOTAL	3,678.7	410.3	4,089.0	3,554.5	461.7	4,016.2

GP23-0550-172

Figure 198.
KC-10A HYDRAULIC SYSTEM WEIGHT SUMMARY

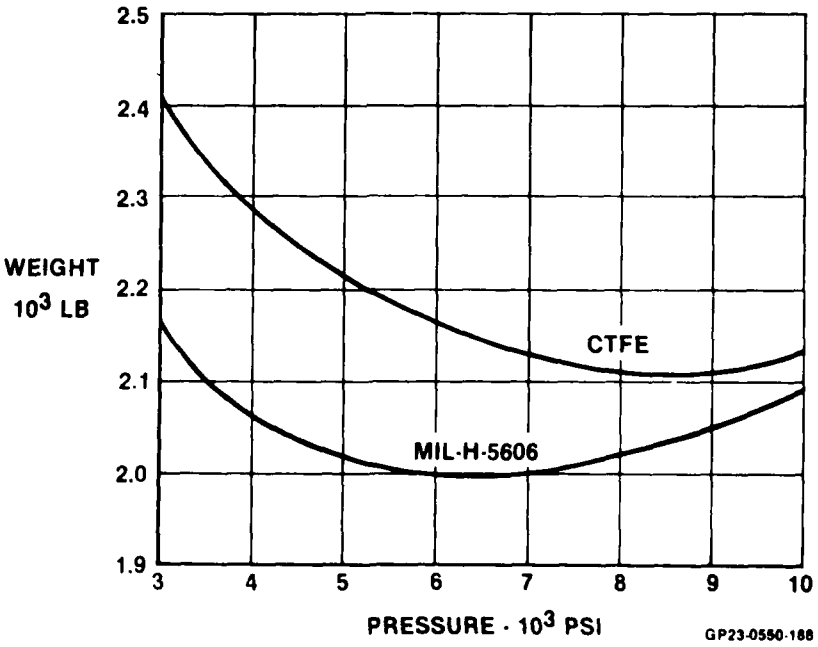

Figure 199
KC-10A TOTAL WET ACTUATOR WEIGHT vs PRESSURE

2.3.5.8 Final Weight Impact Results - The final weight summaries for the F-15 and KC-10A are shown in Figures 218 and 219 respectively. Because of predicted higher internal hydraulic system leakage with A02, heat exchangers are necessary for both aircraft. This adds weight which was not accounted for in the preliminary 8000 psi analyses. To compare the results between the 3000 psi and final 8000 psi configurations, two general weight categories are defined:

1. Component dry weight (Flight Control and Utility Actuators and Miscellaneous Components)

2. Distribution System weight + fluid weight

The distribution system weight savings for each aircraft is 52%. Fluid weight savings for the large aircraft KC-10A is 61% compared to the small aircraft F-15 68%. The weight savings from components excluding fluid is 3% for the KC-10A and 12% for the F-15.

	WEIGHT - LB		
	3,000 PSI	PRELIMINARY 8,000 PSI	FINAL 8,000 PSI
FLIGHT CONTROL ACTUATORS	221	187	207(2)
UTILITY ACTUATORS	207	190	191
MISCELLANEOUS COMPONENTS	544	453	462(1)
DISTRIBUTION SYSTEM	220	157	114
FLUID - CTFE	359	187	146
TOTALS	1,551	1,174	1,120

GP23-0550-261

Notes:

(1) Additional heat exchanger requirement - 10 lb

(2) F-15 stabilator stiffness requirement increased weight 17 lb

Figure 218.
F-15 WEIGHT SUMMARY

	WEIGHT - LB		
	3,000 PSI	PRELIMINARY 8,000 PSI	FINAL 8,000 PSI
FLIGHT CONTROL ACTUATORS	1,238	1,217	1,182
UTILITY ACTUATORS	837	709	899
MISCELLANEOUS COMPONENTS	1,593	1,502	1,474(1)
DISTRIBUTION SYSTEM	1,238	763	673
FLUID - CTFE	2,300	1,196	908
TOTALS	7,256	5,387	5,136

Notes:

(1) Heat exchangers added 91 lb total

GP23-0550-257

Figure 219.
KC-10A WEIGHT SUMMARY

2.4 RELIABILITY, MAINTAINABILITY AND LIFE CYCLE COSTS (LCC) ANALYSIS

2.4.1 Ground Rules - We considered simplifying the actuators with force motor replacing EHV's and dual unvented seals replacing the current vented design. All high pressure utility actuators had dual unvented seals. Most other components and tubing were reduced in size because of the higher system pressure and lower flow requirements, but functionally were the same. Figure 220 and 221 show typical designs for linear and rotary force motors. Figure 222 shows how a flight control actuator (typical 1990's type) can be simplified by using a force motor. Figures 223 and 224 show typical pressure intensifiers.

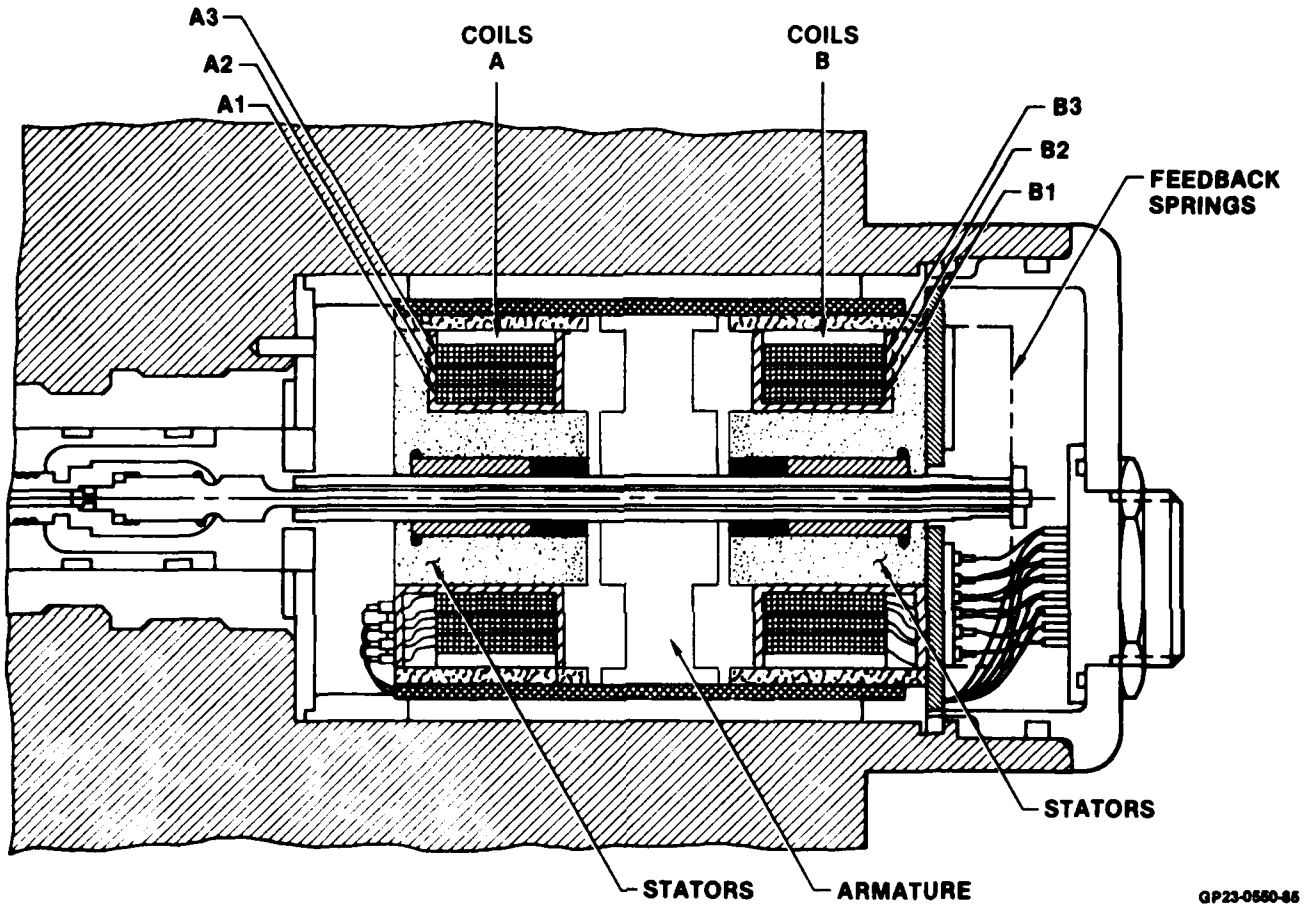

Figure 220.
TRIPLEX (3 CHANNEL) LINEAR
LEDEX Force Motor Cross Section

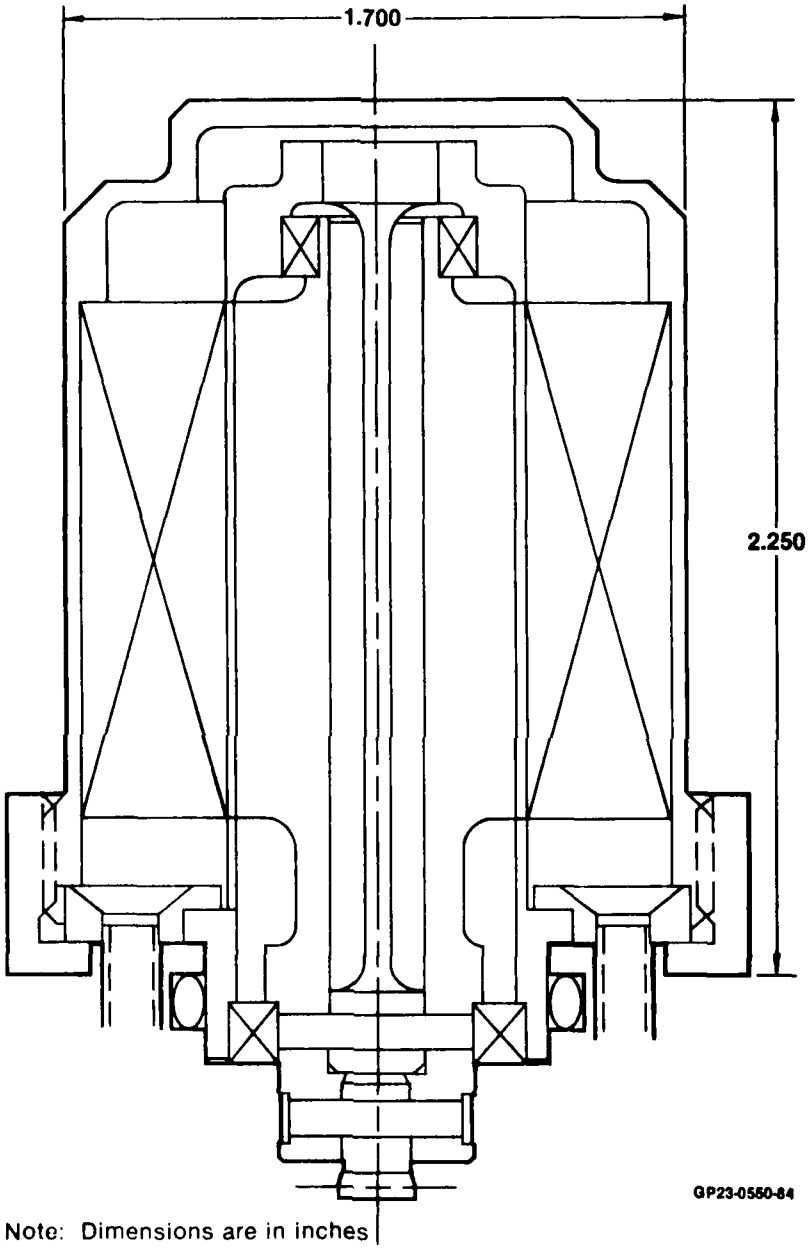

Figure 221.
NATIONAL WATER LIFT (NWL)
Rotary Force Motor Cross Section

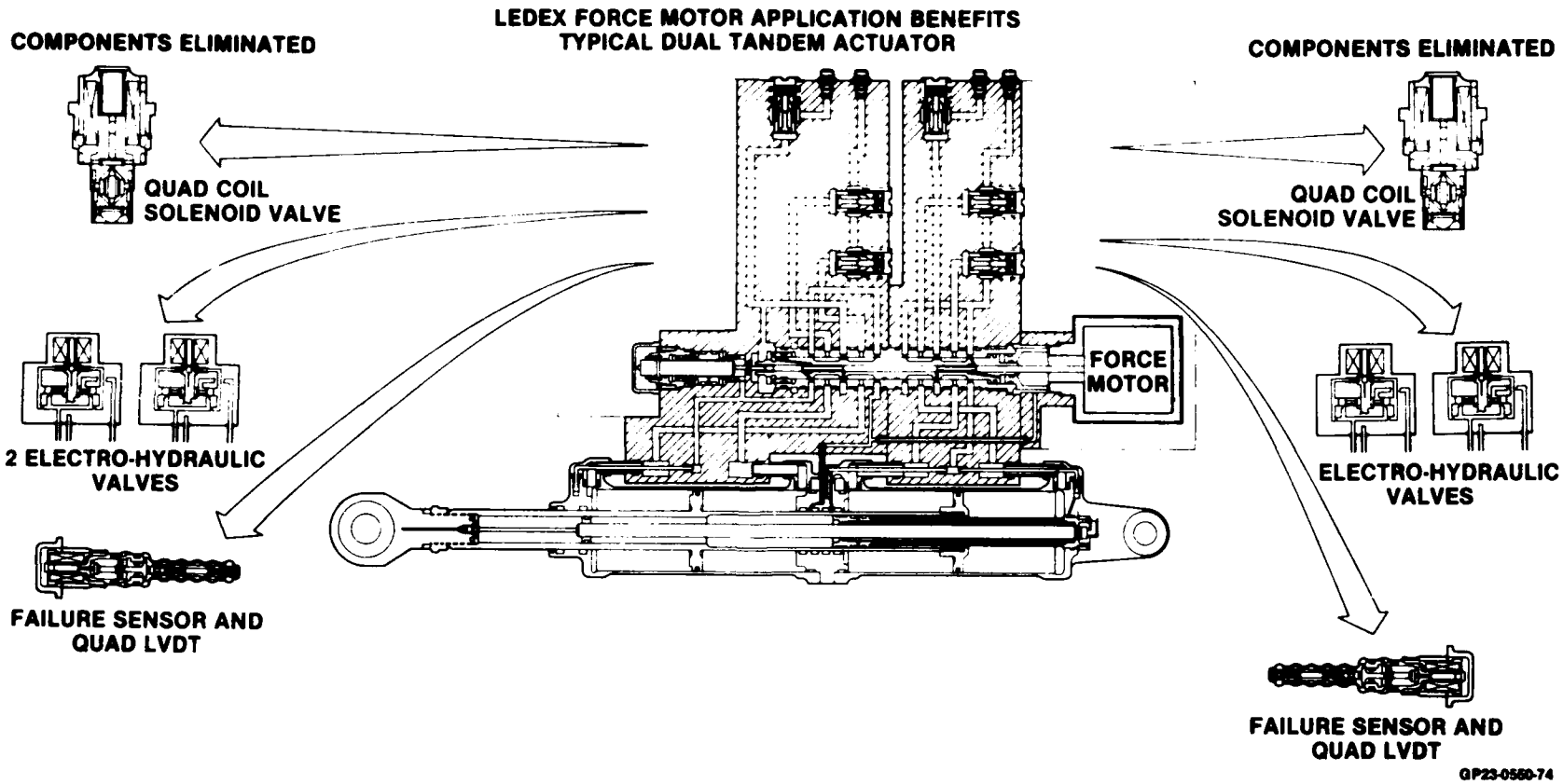

Figure 222.
DIRECT VALVE DRIVER DEVELOPMENT
FOR FLIGHT CONTROL ACTUATORS
MCAIR - Ledex Inc. Cooperative Effort

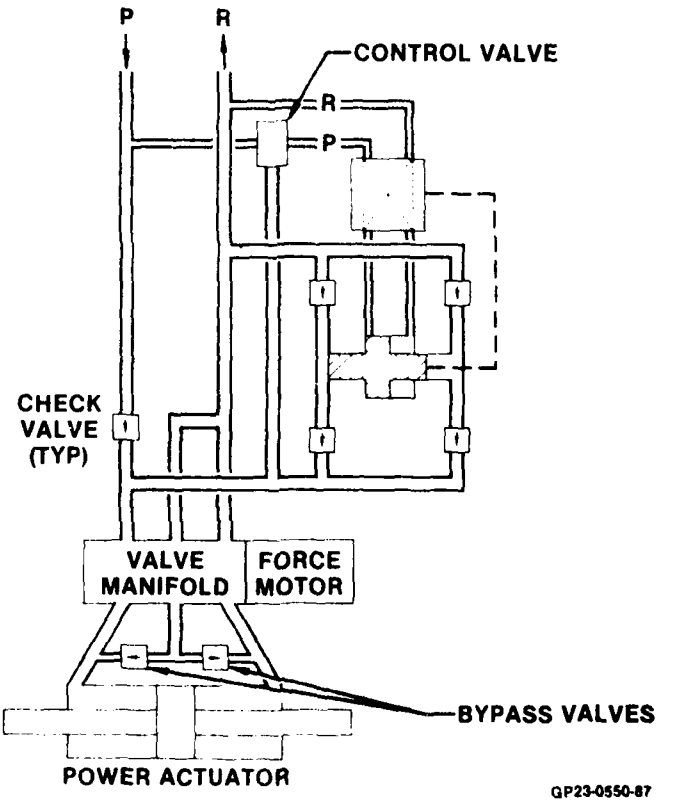

Figure 223.
PRESSURE INTENSIFIER
Schematic

Note: Dimensions are in inches

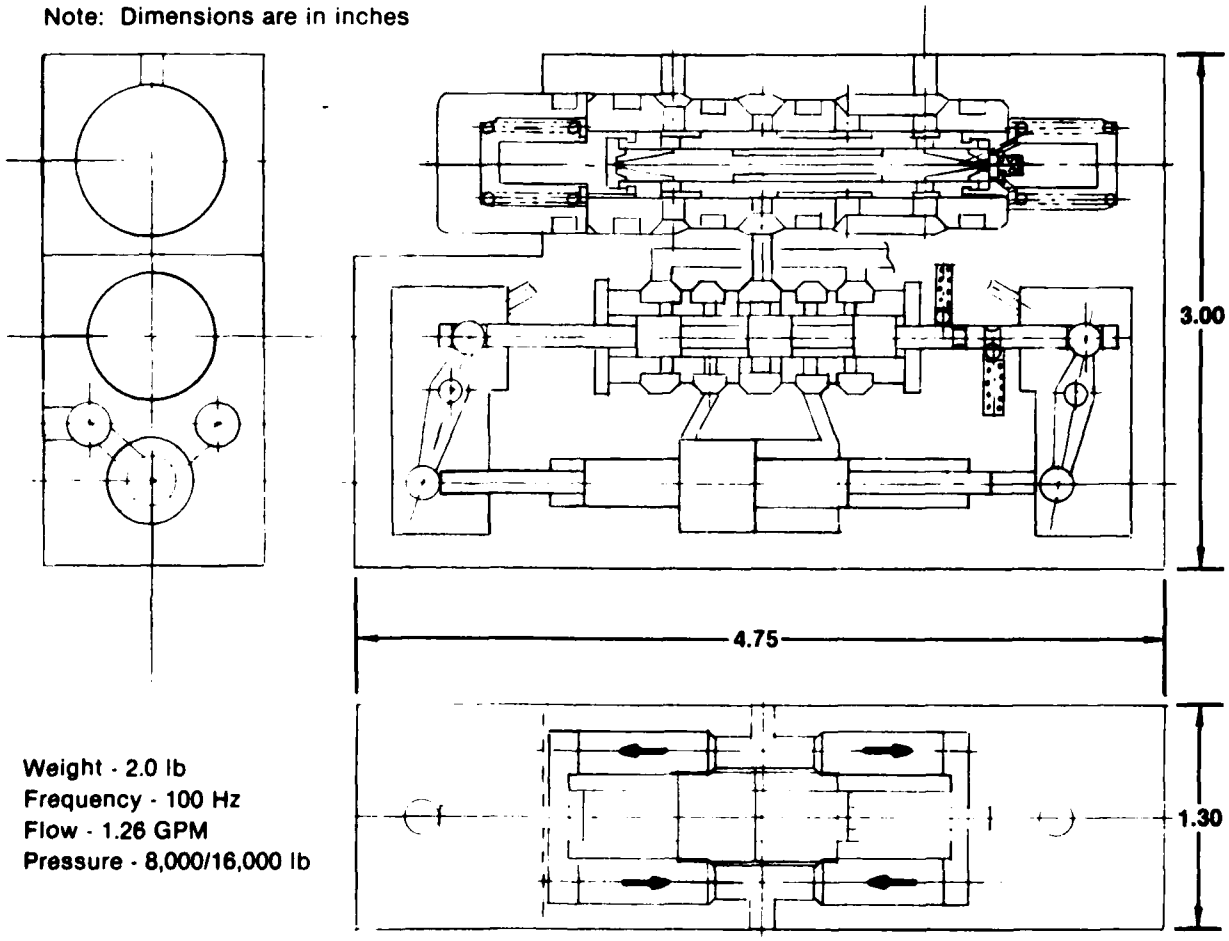

Weight - 2.0 lb
Frequency - 100 Hz
Flow - 1.26 GPM
Pressure - 8,000/16,000 lb

GP23-0550-88

Figure 224.
MCAIR PRESSURE INTENSIFIER

2.4.1.1 F-15 Alternate Configurations - Five configurations were evaluated as follows:

		Figure
Baseline (3000 psi):	F-15 as now configured	225
Baseline (8000 psi):	F-15 8000 psi baseline Force motors replace EHV's at locations a noted.	226
Alternate 1 (8000 psi):	Same as Baseline (8000 psi), but in addition the aircraft is configured as a 1990's Fly-by-Wire aircraft with no mechanical backups to the hydraulic flight control actuators. The CSBPC, PRCA and ARI are eliminated.	227
Alternate 1(a) (8000 psi):	Same as Alternate 1 except EHV's are used in place of force motors.	228
Alternate 2 (8000 psi):	Same as Alternate 1, but in addition the flight control actuators and selected utility actuators have pressure intensifiers.	229

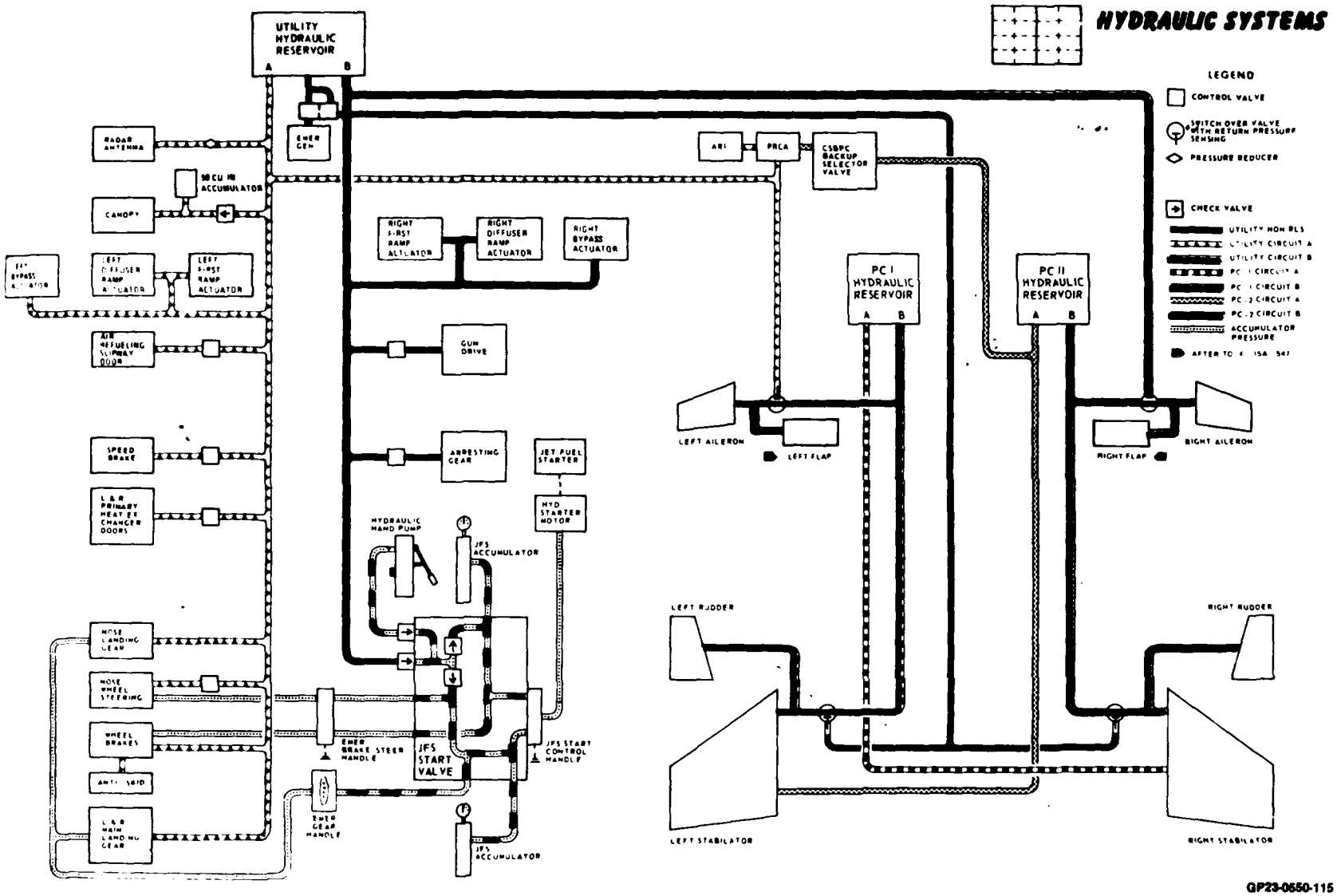

Figure 225.
F-15 3,000 PSI BASELINE HYDRAULIC SYSTEM

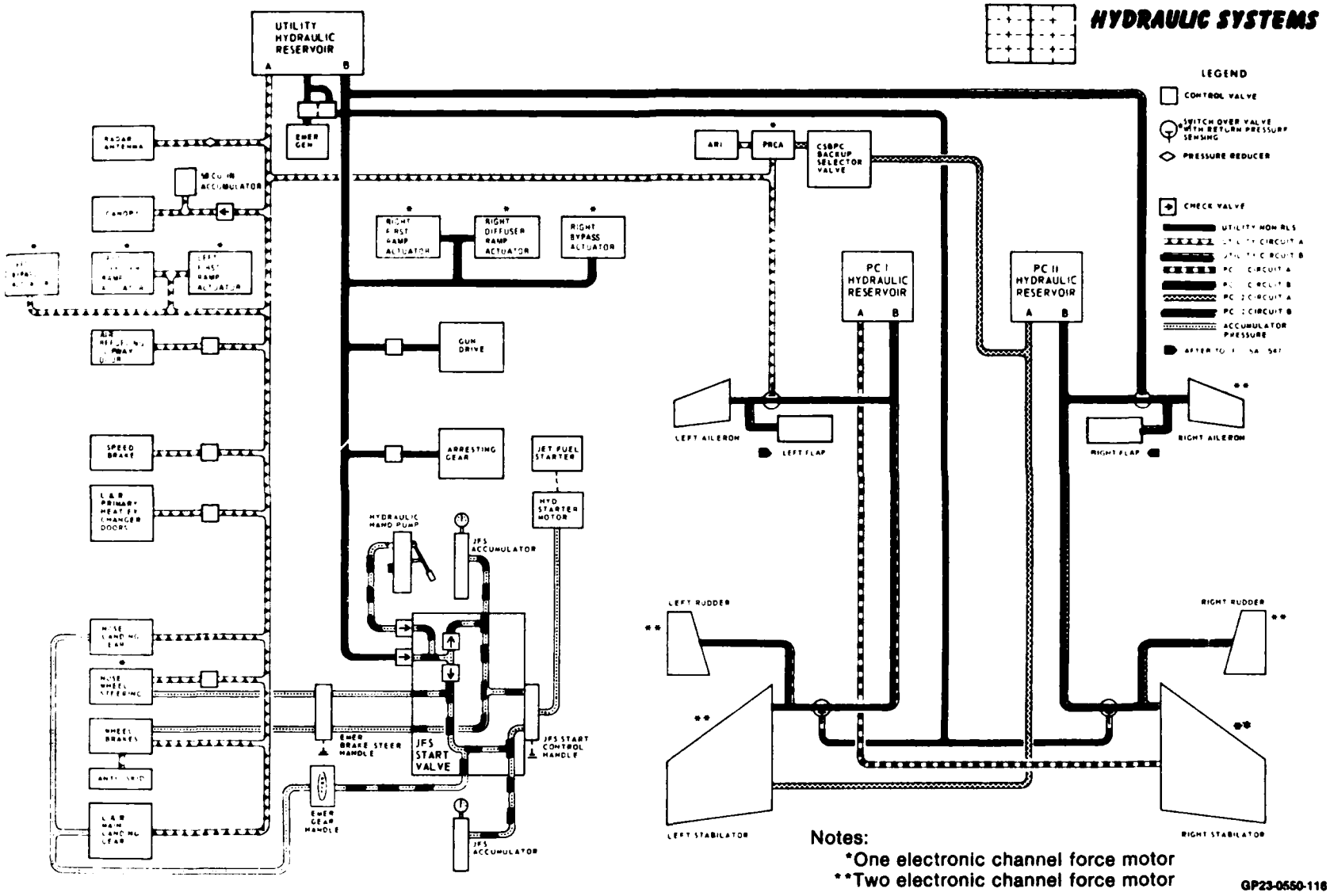

Figure 226.
F-15 8,000 PSI BASELINE HYDRAULIC SYSTEM

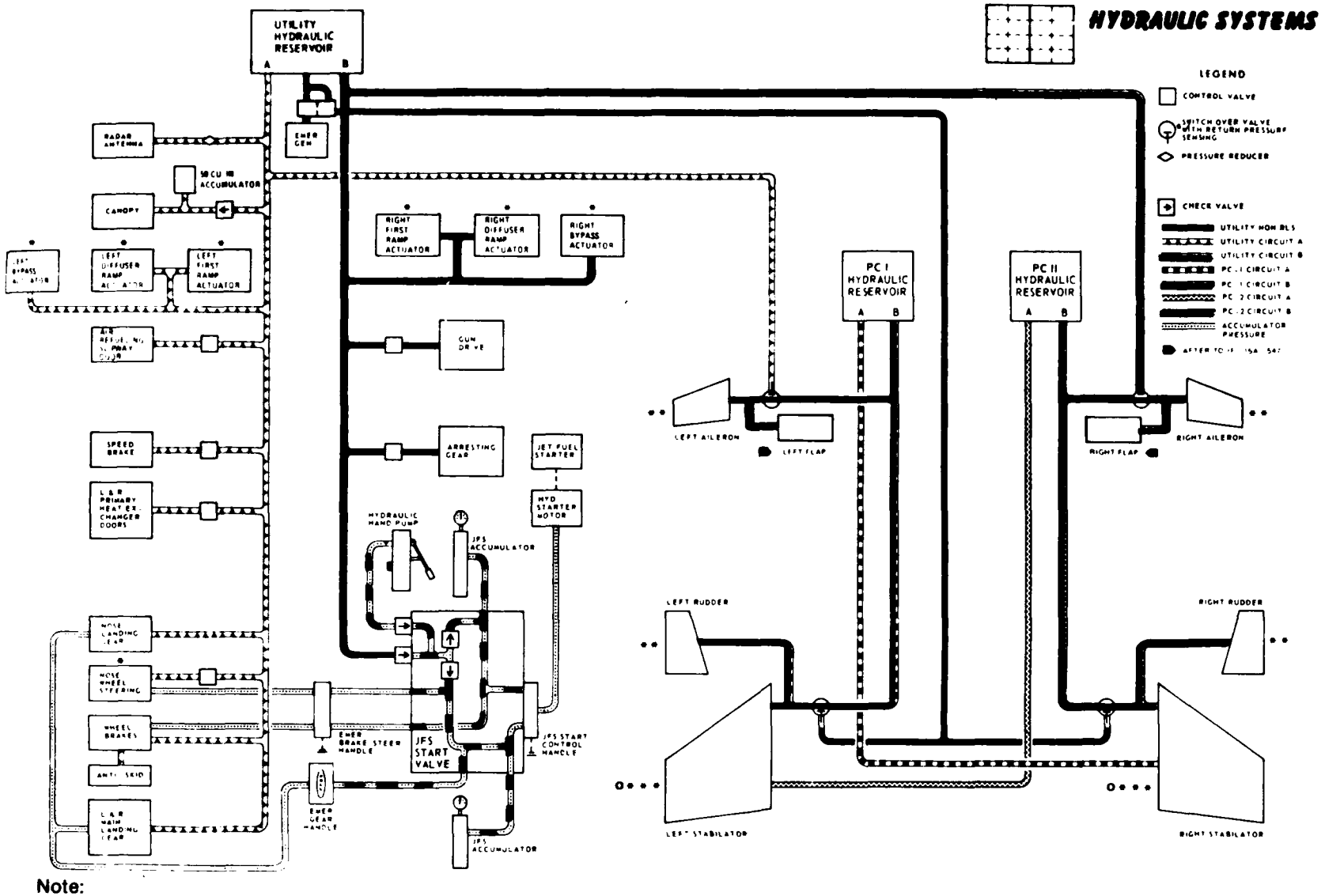

Note:
- * One electronic channel force motor
- ** Two electronic channel force motor
- *** Four electronic channel force motor

GP23-0550-117

Figure 227.
F-15 8,000 PSI ALTERNATE 1 HYDRAULIC SYSTEM

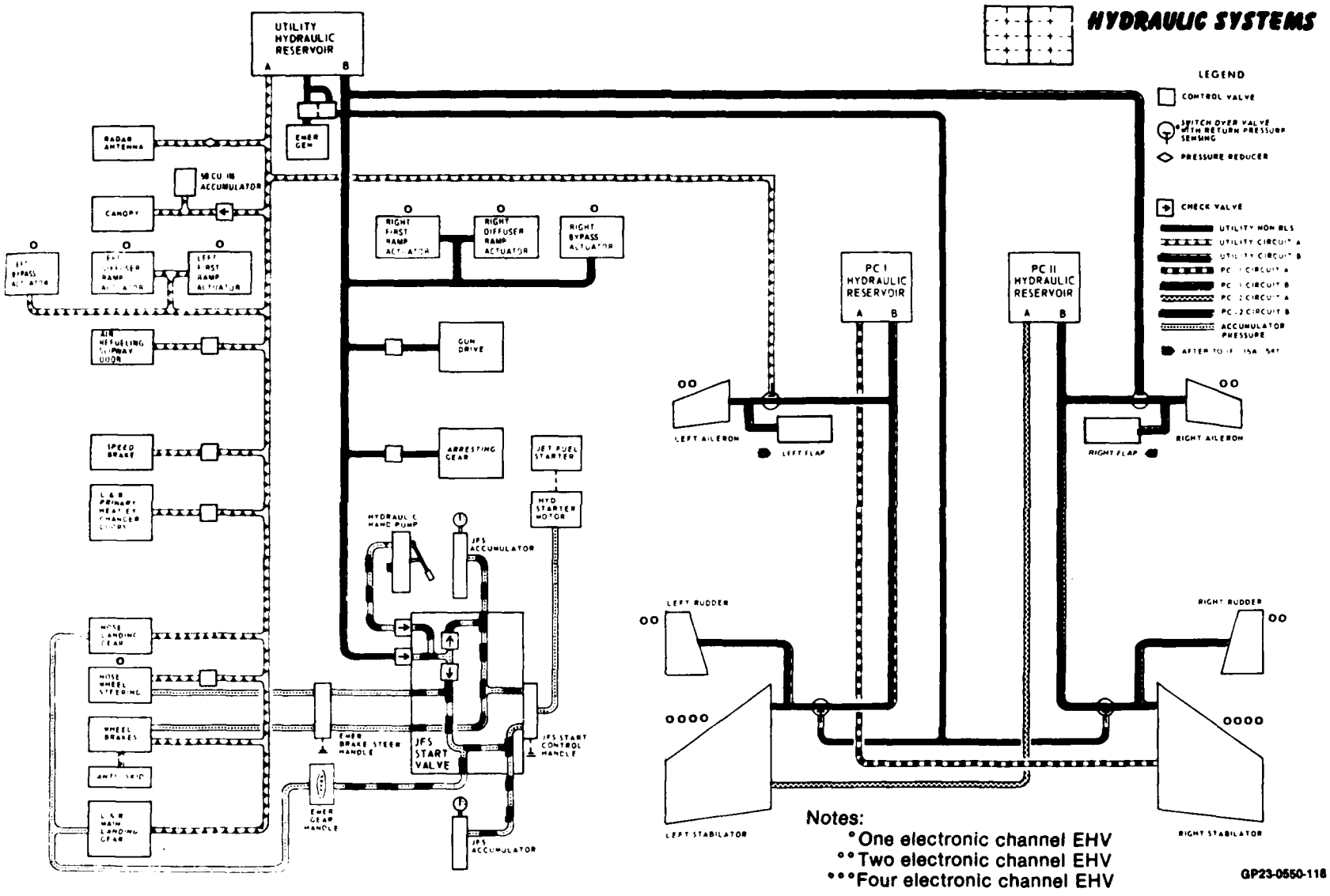

Figure 228.
F-15 8,000 PSI ALTERNATE 1(a) HYDRAULIC SYSTEM

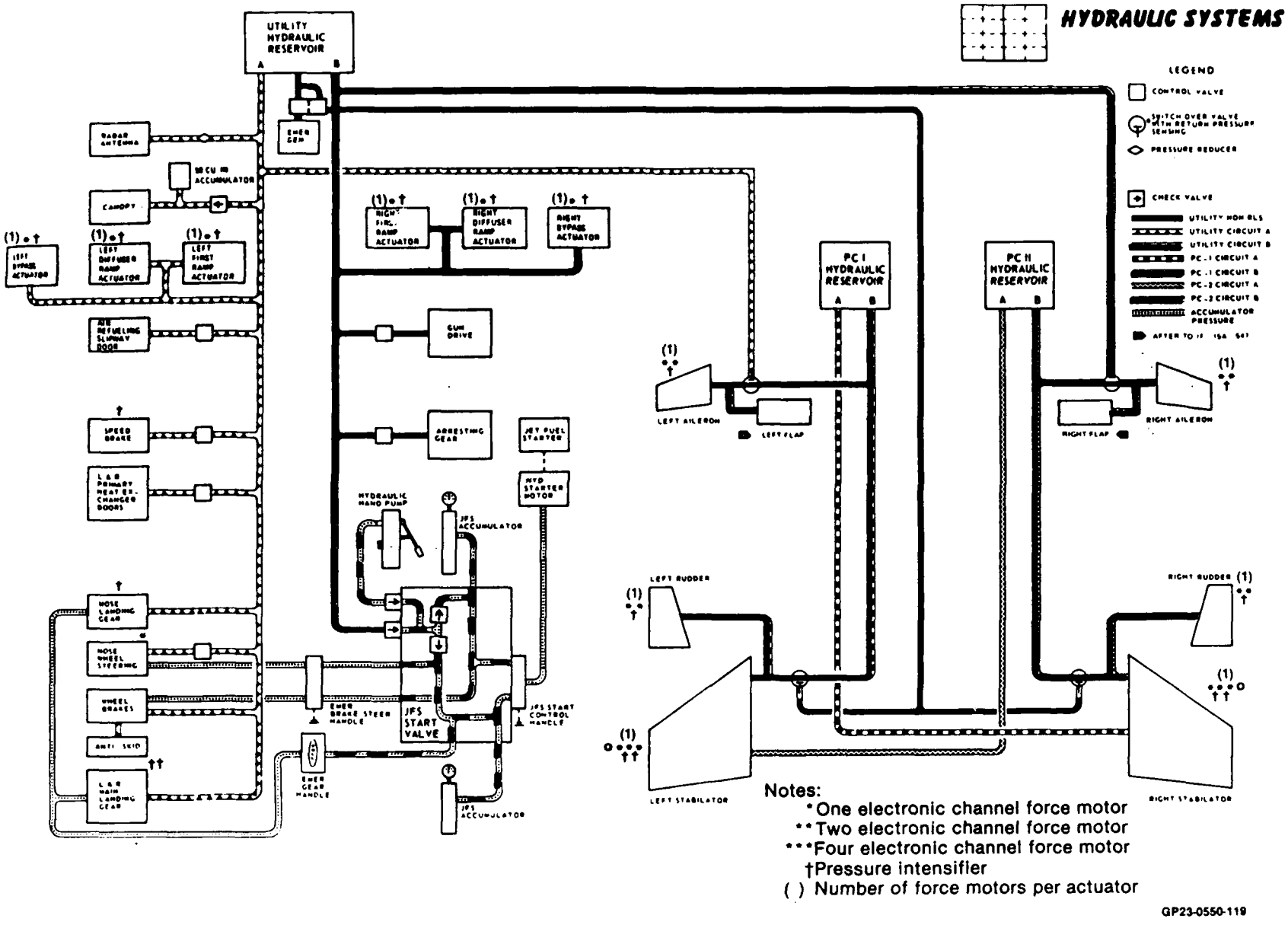

Figure 229.
F-15 8,000 PSI ALTERNATE 2 HYDRAULIC SYSTEM

Figure 230 shows data used in the analyses. The changes considered in the various configurations are as follows:

	BASE-LINE 3000	BASE-LINE 8000	ALTER-NATE 1 8000	ALTER-NATE 1(a) 8000	ALTER-NATE 2 8000
a) Replacing EHV's with force motors for stabilator, PRCA and rudder reduces weight electrical wires.	-	x	-	-	-
b) Use of force motors eliminates mechanical linkage to aileron, stabilator, rudder and CSBPC. Reduces electrical wires to stabilator, rudder and CSBPC, but adds wires to aileron.	-	-	x	x	x
c) Reduction in volume of hydraulic fluid, but fluid cost increases.	-	x	x	x	x
d) Increased complexity in Flight Control Electronic System.	-	x	x	x	x
e) Pressure intensifiers add complexity.	-	-	-	-	x

1. COSTS IN CONSTANT 1982 DOLLARS
2. 500 SHIPSETS OF HARDWARE COSTED
3. SOFTWARE COSTS INCLUDED
4. SUPPORT EQUIPMENT NOT COSTED
5. 15 YEAR OPERATIONAL LIFE
6. 300 FLYING HOURS PER AIRCRAFT PER YEAR
7. OPERATIONAL DEPLOYMENT IN THREE THEATRES
8. SEVEN BASE-INTERMEDIATE MAINTENANCE LOCATIONS
9. MATURE FIELD VALUES FOR MAINTAINABILITY PARAMETERS

GP23-0550-191

Figure 242.
COST GROUND RULES

EQUIPMENT	MECHANICAL		ADVANCED FLIGHT CONTROL SYSTEM (DIGITAL)		
	REFERENCE 3,000 PSI	BASELINE 8,000 PSI (FM)	ALT 1 (FM)	ALT 1A (EHV)	ALT 2 (FM + PI)
FLIGHT CONTROL ACTUATORS	221.0	187.3	141.7	176.7	149.7
UTILITY ACTUATORS	207.0	190.1	190.1	190.1	197.0
MISC COMPONENTS	600.5	538.4	358.7	358.7	283.3
DISTRIBUTION SYSTEM	220.0	157.0	157.0	157.0	127.0
FLUID	163.0	187.0	175.0	180.0	140.0
FLT CONTROL COMPUTERS	24.9	24.9	94.2	94.2	94.2
TOTAL	1,436.4	1,284.7	1,116.7	1,156.7	991.2
VARIANCE FROM WEIGHT OF REFERENCE SUBSYSTEM	—	151.7	319.7	279.7	445.2

Notes: 1. Weights are in pounds
2. Weights are for one shipset of equipment

GP23-0550-193

Figure 243.
EQUIPMENT WEIGHT SUMMARY

Life cycle costs for a complete aircraft system were calculated after the aircraft was resized as the hydraulic and flight control weight varied. Costs for the reference system and for two of the alternative subsystems are given in Figure 241. Here, the alternatives without the mecahnical flight control are less costly to develop, acquire, and to operate and support. Of the alternatives, the configuration employing force motor and pressure intensifiers remains the least costly of the three alternatives.

AIRCRAFT SYSTEM COSTS - $ M̄ 82			
COST CATEGORY	F-15 3,000 PSI BL	8,000 PSI RESIZED F-15	
		ALTERNATE 1 (FM)	ALTERNATE 2 (FM + PI)
TOTAL AIRCRAFT			
UNIT FLYAWAY COST	22.096	22.060	21.884
TOTAL LIFE CYCLE COST	28,396	28,259	28,035
HYD/FLIGHT CONTROL CONTRIBUTION			
UNIT FLYAWAY COST	0.728	0.844	0.837
TOTAL LIFE CYCLE COST	546	740	716
EMPTY WEIGHT TOTAL AIRCRAFT (LB)	27,380	26,710	26,440

GP23-0550-179

Figure 241.
AIRCRAFT SYSTEM LIFE CYCLE COST ASSESSMENT SUMMARY

2.4.4.3 Ground Rules and Assumptions - The LCC that were generated for this study consist of those costs associated with full scale development, production (including spares and support, and operations and support) in the user environment. The LCC of all configurations were compared using the groundrules shown in Figure 242.

2.4.4.4 PRICE Model Analysis - The life cycle costs of the hardware equipment which constitute the reference, the baseline and three alternate subsystems were developed using the RCA PRICE model. Development, production and support components were estimated. The equipment weight summary is shown in Figure 243. "Miscellaneous components" contains all the valves, the Control Stick Boost and Pitch Compensator (CSBPC), and related equipment. "Distribution system" contains the tubing and related hardware. The cost analysis, however, was conducted at a lower level of detail. Each aileron actuator, rudder actuator, and computer, for example, was described in terms of an independent cost model input.

The LCC of an aircraft system that embodies the hydraulic and related equipment was calculated using a method that resizes the aircraft to maintain constant performance for changes in hydraulic system weight.

The F-15C aircraft and its 3000 psi hydraulic system was chosen as the reference system. This aircraft system was upgraded to a 8000 psi subsystem (the baseline) using the results of the hydraulic design. Both the reference and baseline subsystems contain mechanical flight control equipment and analog computer systems. The design analysis also produced three alternative 8000 psi configurations for the F-15 without mechanical flight control equipment. Life cycle costs and comparisons were generated for all of these configurations.

2.4.4.2 Summary of the Results - The total LCC of hydraulics and related equipment is presented in Figure 240 for the five subsystems. The alternative subsystem that incorporates force motors and pressure intensifiers is the lowest cost of the three alternates. The life cycle costs of all the alternatives are higher than either the reference or the baseline system. However, the three alternative configurations which rely on digital flight control equipment and are significantly lower in weight. Therefore, it is necessary to examine the reduction in total aircraft weight and the net cost reduction for the total aircraft weapon system in order to fairly access the benefits of each of the three alternative subsystems.

F-15 AIRCRAFT GROUND RULES:
1982 DOLLARS
15-YEAR OPERATIONAL LIFE
500 SHIPSETS OF EQUIPMENT

HYDRAULIC/FLIGHT CONTROL COSTS - $M̄ 82					
ITEM	F-15 3,000 PSI MECH	F-15 8,000 PSI MECH + FM	ADV FLIGHT CONTROL SYSTEM (DIGITAL)		
			ALTERNATE 1 (FM)	ALTERNATE 2 (FM + PI)	ALTERNATE 1A (EHV)
UNIT PRODUCTION COST (2)	0.728	0.787	0.844	0.837	0.896
LIFE CYCLE COST (1)	546	555	695	654	733
WEIGHT (LB)	1,436	1,285	1,117	991	1,157

Notes:
(1) With fuel savings deducted
(2) Unit production cost is based on a buy of 500 shipsets plus spares

GP23-0550-281

Figure 240.
SUBSYSTEM LIFE CYCLE COST ASSESSMENT SUMMARY

Alternate 1(a) maintainability effects are considered to be greater due to the replacement of force motors with EHV's.

The Alternate No. 2 configuration is identical to Alternate No. 1 except for the addition of pressure intensifiers to the flight control actuators. The maintenance requirements therefore remain the same except for the slight increase resulting from the intensifiers.

2.4.4 Life Cycle Cost Analysis

2.4.4.1 Analytical Approach - Life cycle costs were developed on a subsystem basis (hydraulics and related equipment) and on a system basis (total aircraft) using the methodology shown in Figure 239. The life cycle costs (LCC) of the hydraulic and related equipment was calculated using the RCA PRICE model (Reference 11). Development, production and support cost of this equipment were estimated for the general operational environment of the F-15, however the results are generally applicable to other fighter aircraft of that weight class.

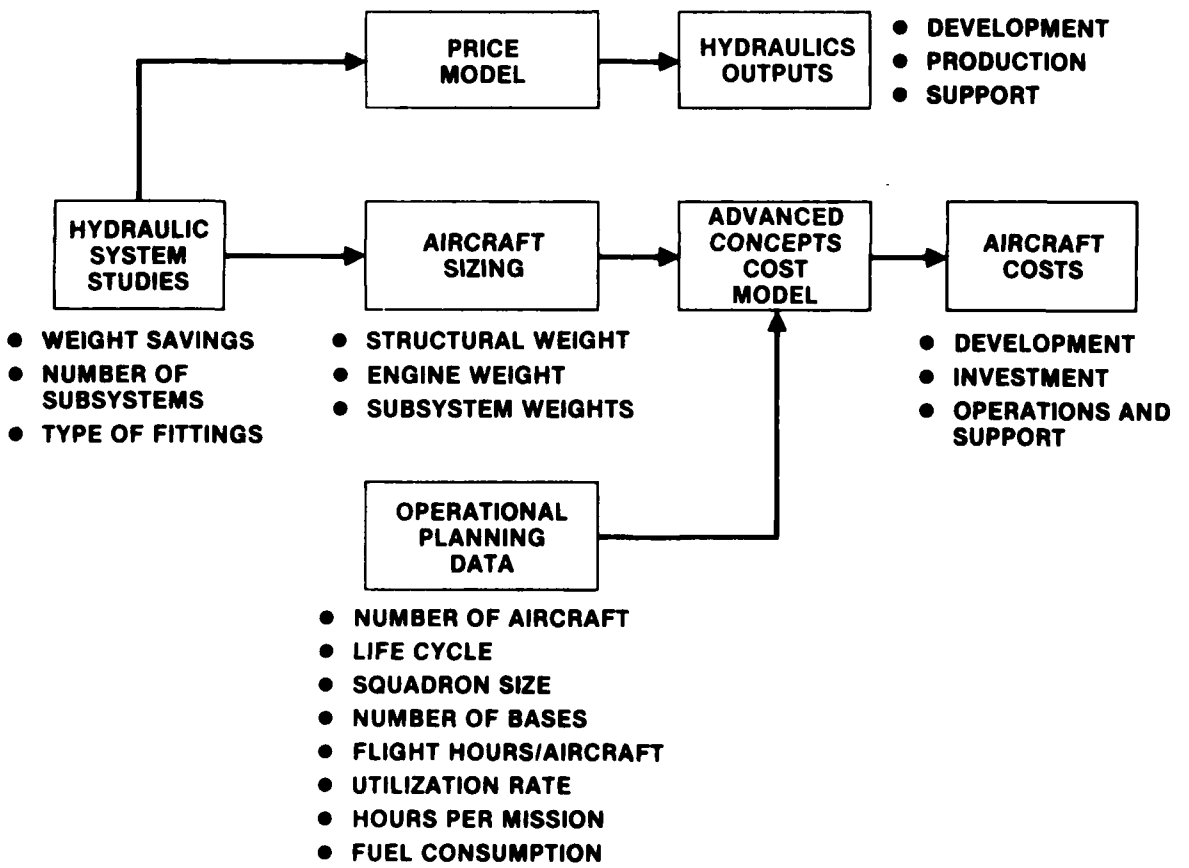

Figure 239.
STRUCTURE OF COST ANALYSIS

2.4.3 Maintainability Results

F-15

The maintenance impact was evaluated for the Baseline 8000 psi system and Alternate No. 1, 1A and 2 configurations. The existing F-15 3000 psi system was used as baseline for these evaluations. Results are shown in Figure 238.

CONFIGURATION	MMH/FM
BASELINE 3,000 PSI	0.3982
BASELINE 8,000 PSI	0.3748
ALTERNATE NO. 1	0.2262
ALTERNATE 1(A)	0.2469
ALTERNATE NO. 2	0.2464

GP23-0550-266

Figure 238.
UNSCHEDULED MAINTENANCE MANHOURS/FLIGHT HOUR ORGANIZATIONAL AND INTERMEDIATE MAINTENANCE

The value shown for the Baseline 3000 psi configuration is the actual F-15 experience data as reported by the USAF 66-1 maintenance data collection system for the period 1 January through 31 December 1980. The indicated value is not comparable to data reported for Work Unit Code 45000 which is hydraulic power generation only, but is the total for all significant hydraulic components in all systems in the aircraft.

The improvement shown for the Baseline 8000 psi system is the result of replacement of a number of components in the actuator valve manifold with a single force motor in various actuators. The improved reliability provided by the reduction in number of components will result in a corresponding decrease in maintenance. The increase in pressure to 8000 psi is assumed to be offset by the significantly improved sealing provided by use of dual unvented seals in all utility actuators.

For the Alternate No. 1 the principal maintainability improvement is the complete elimination of the aileron/rudder interconnect, the pitch and roll channel assembly, and the thermal control bypass valve. These components are displaced by a 1990's type fly-by-wire flight control system with no mechanical backups. Improvements in avionic technology by the 1990's are assumed to offset the maintainability effects of the additional avionics required for the fly-by-wire system.

KC-10A

In general, the proposed changes to the present KC-10A hydraulic system configuration will enhance its reliability. However, in order to predict the reliability it was necessary to review the design of the system and components affected by the 8000 psi system. Consideration was given to the higher pressure and its effect on reliability, where applicable.

Reliability data to quantify the failure rates (mean time between failure (MTBF)) was extrapolated from the following sources:

a) DAC KC-10A Master Reliability Data
b) USAF KC-135 Data
c) MCAIR KC-135 Data
d) DAC DC-10 Data
e) National Water Lift Control Systems
f) Bertea (Parker Hannifin)
g) Airesearch Manufacturing Co.
h) Bureau of Naval Weapons
i) Failure Rate Data Program (FARADA)
j) DAC Reliability Engineering Estimates

Figure 237 presents the Quantitative Reliability Data resulting from the KC-10A hydraulic system reliability analysis.

CONFIGURATION	SHIP SET $\times 10^{-6}$	SHIP SET MTBF OP/HR	RELIABILITY INCREASE
BASELINE - 3,000 PSI KC-10A CONFIGURATION	5,429	184	N/A
BASELINE - 8,000 PSI FORCE MOTORS REPLACE EHVs	4,754	210	12%
ALTERNATE 1 - 8,000 PSI FBW	4,632	213	13%
ALTERNATE 2 - 8,000 PSI FBW WITH INTENSIFIERS	4,742	210	12%

GP23-0550-265

Figure 237.
KC-10A QUALITATIVE RELIABILITY DATA

This analysis is predicated on the technical data and information available at this time.

	F-15 3,000 PSI	BASELINE 8,000 PSI	ALTERNATE		ALTERNATE 2
			1	1-A	
MFHBF	13.8	15.6	16	15	16.4
PERCENT IMPROVEMENT	N/A	13%	15.9%	8.7%	18.8%

GP23-0550-264

Figure 236.
MEAN FLIGHT HOURS BETWEEN FAILURES (MFHBF)

The improvement shown for the Baseline 8000 psi system is the result of replacing a number of components in the actuator valve manifold with a single force motor in various actuators. In each rudder and stabilator actuator, two solenoid valves, two electrohydraulic servo valves, the linear variable displacement transducer, and the control augmentation system actuator are each replaced by a dual channel force motor. Similarly, in the diffuser, first ramp and bypass door actuators and the pitch and roll channel assembly, solenoid and electrohydraulic servo valves are replaced by one single channel force motor. The improved reliability obtained by reducing the number of components will result in a corresponding decrease in maintenance. The increase in pressure to 8000 psi is accommodated by the better sealing obtainable with dual unvented seals in all utility actuators.

For the Alternate No. 1 configuration, the above improvements for the air induction and flight control systems actuators are still applicable except the stabilator force motors are four channel, and dual channel force motors are added to aileron actuators. In addition, the principal maintainability improvement in this configuration is the complete elimination of the aileron/rudder interconnect, the pitch and roll channel assembly, and the thermal control bypass valve. These are displaced by a 1990's type fly-by-wire flight control system with no mechanical backups. Improvements in avionic technology by the 1990's are assumed to offset maintainability effects of the additional avionics required for the fly-by-wire system in comparison to the present F-15 system.

Alternate 1(a) is the same as alternate 1 except EHV's are used in place of force motors. This decreases the effect which force motors had gained.

The Alternate No. 2 configuration is identical to Alternate No. 1 except for the addition of pressure intensifiers to the flight control actuators. The maintenance requirements therefore remain the same except for the slightly added effect of the intensifiers.

The changes considered for the KC-10A are summarized below:

	BASELINE 3000	BASELINE 8000	ALTERNATE 1 8000	ALTERNATE 2 8000
a) Replacing all EHV's with force motors	-	x	-	-
b) Use of force motors reduces hydraulic fluid leakage associated with EHVs by 80%. Reduced hydraulic system size, heat input and improved valve life.	-	x	x	x
c) Reduction in volume of hydraulic fluid, but fluid cost increases	-	x	x	x
d) Increased complexity in Flight Control Electronic	-	-	x	x
e) Pressure intensifiers add complexity	-	-	-	x
f) Higher force motor (chip shearing) power required.	-	-	-	x

2.4.2 Reliability Results

F-15

The reliability improvement in the current F-15 3000 psi system was evaluated for the Baseline 8000 psi system and for alternatives 1, 1A and 2. The results are shown in Figure 236.

The value shown for the Baseline 3000 psi configuration is the actual F-15 experience data as reported by the USAF 66-1 maintenance data collection system for the period 1 January through 31 December 1980. The indicated value is not comparable to data reported for Work Unit Code 45000 which is hydraulic power generation only, but is the total for all significant hydraulic components in all systems throughout the aircraft.

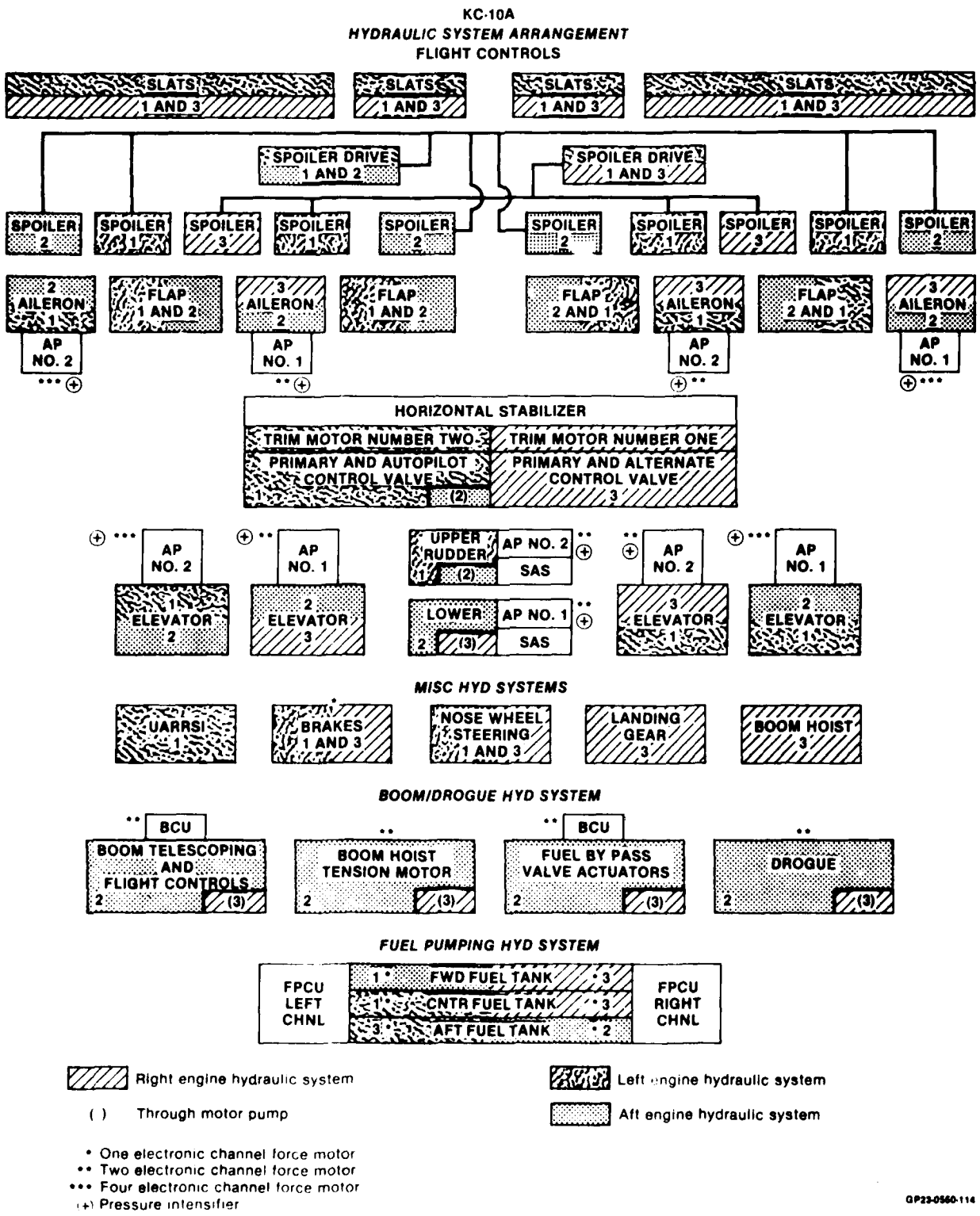

Figure 235.
KC-10A ALTERNATE 2 8,000 PSI

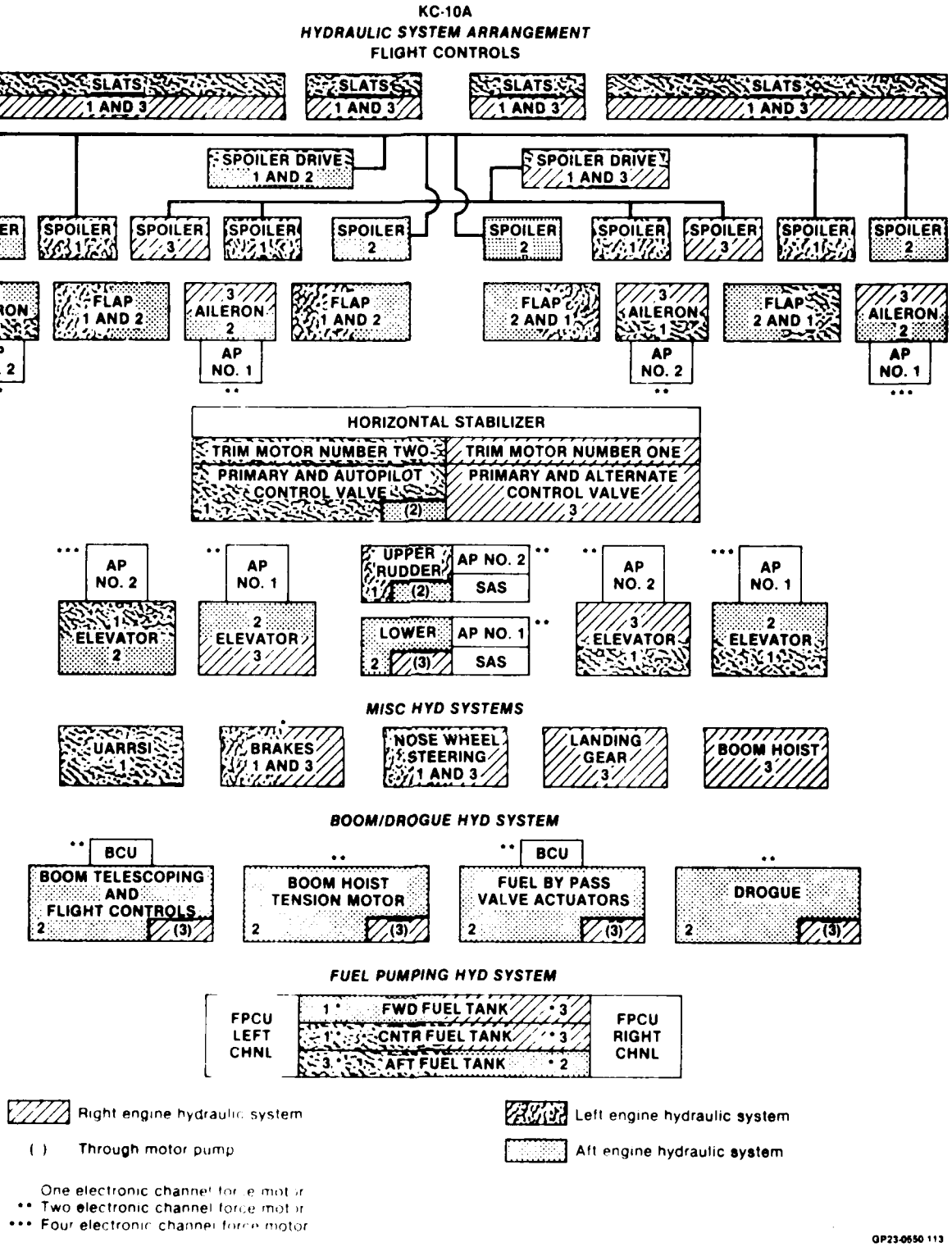

Figure 234.
KC-10A ALTERNATE 1
Fail Manual

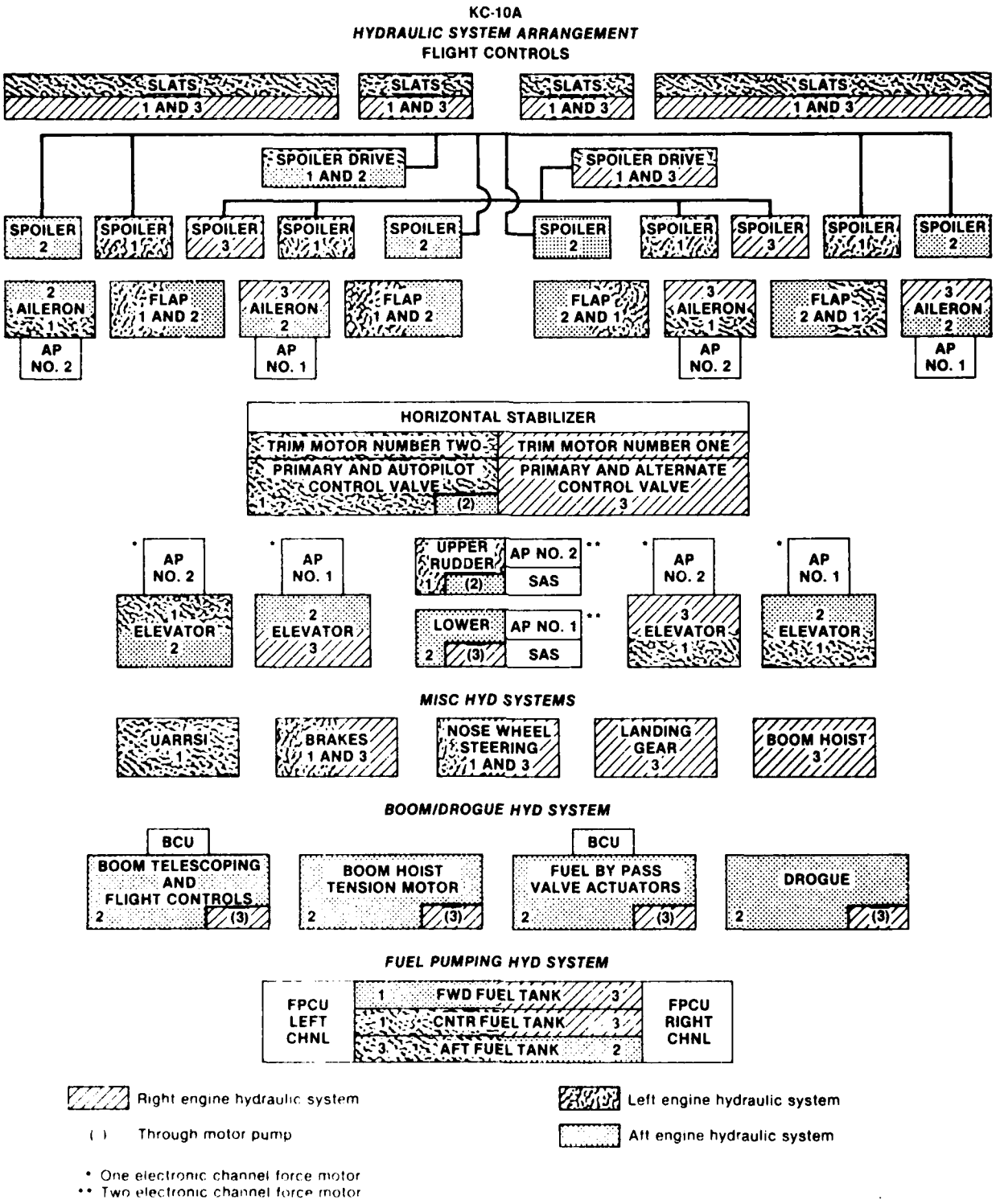

Figure 233.
KC-10A 3,000 PSI AND 8,000 BASELINE

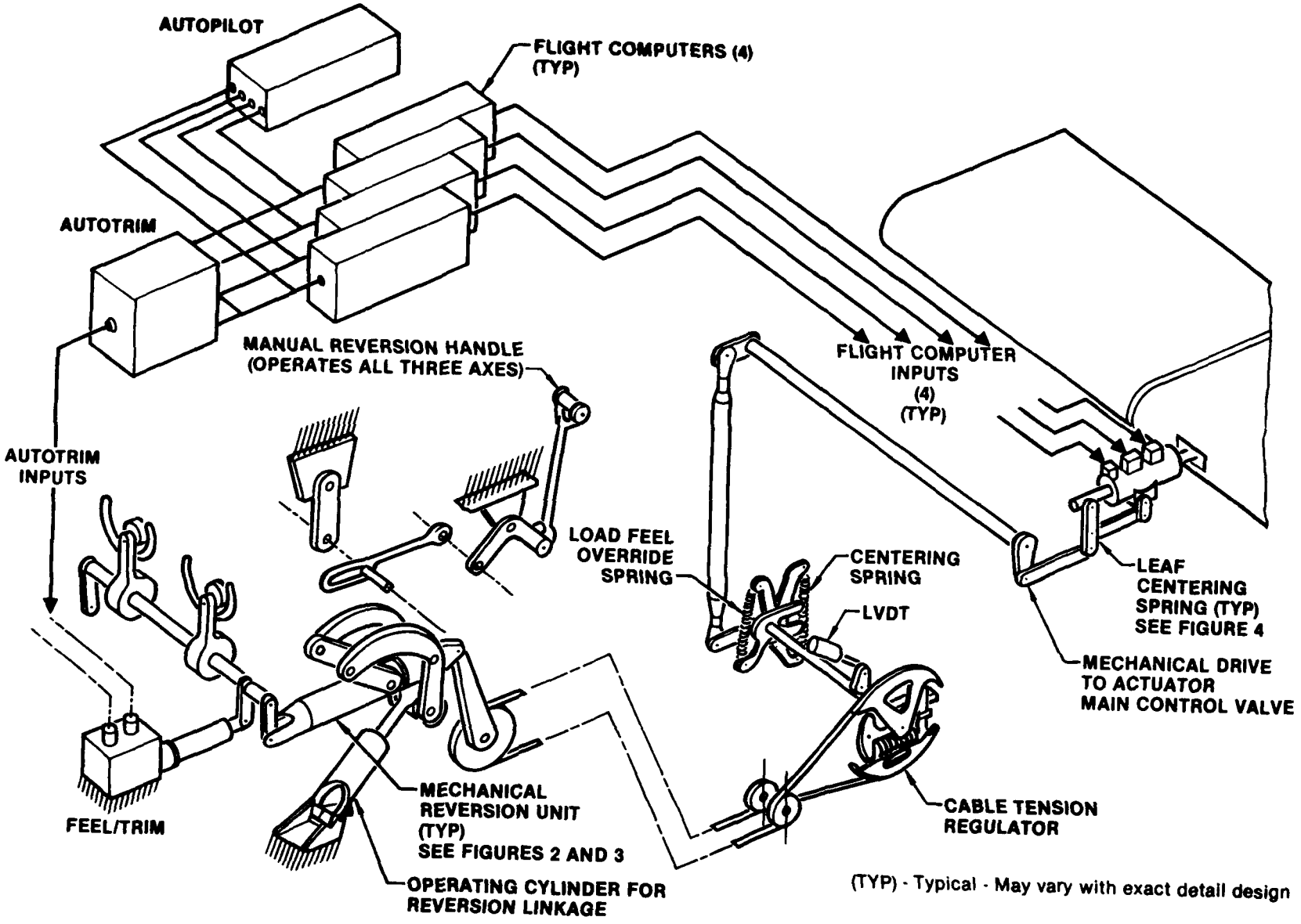

Figure 232.
KC-10A FLIGHT CONTROLS
MECHANICAL REVERSION FOR FBW SYSTEM
Elevator System
(Rudder and Aileron Systems Similar)

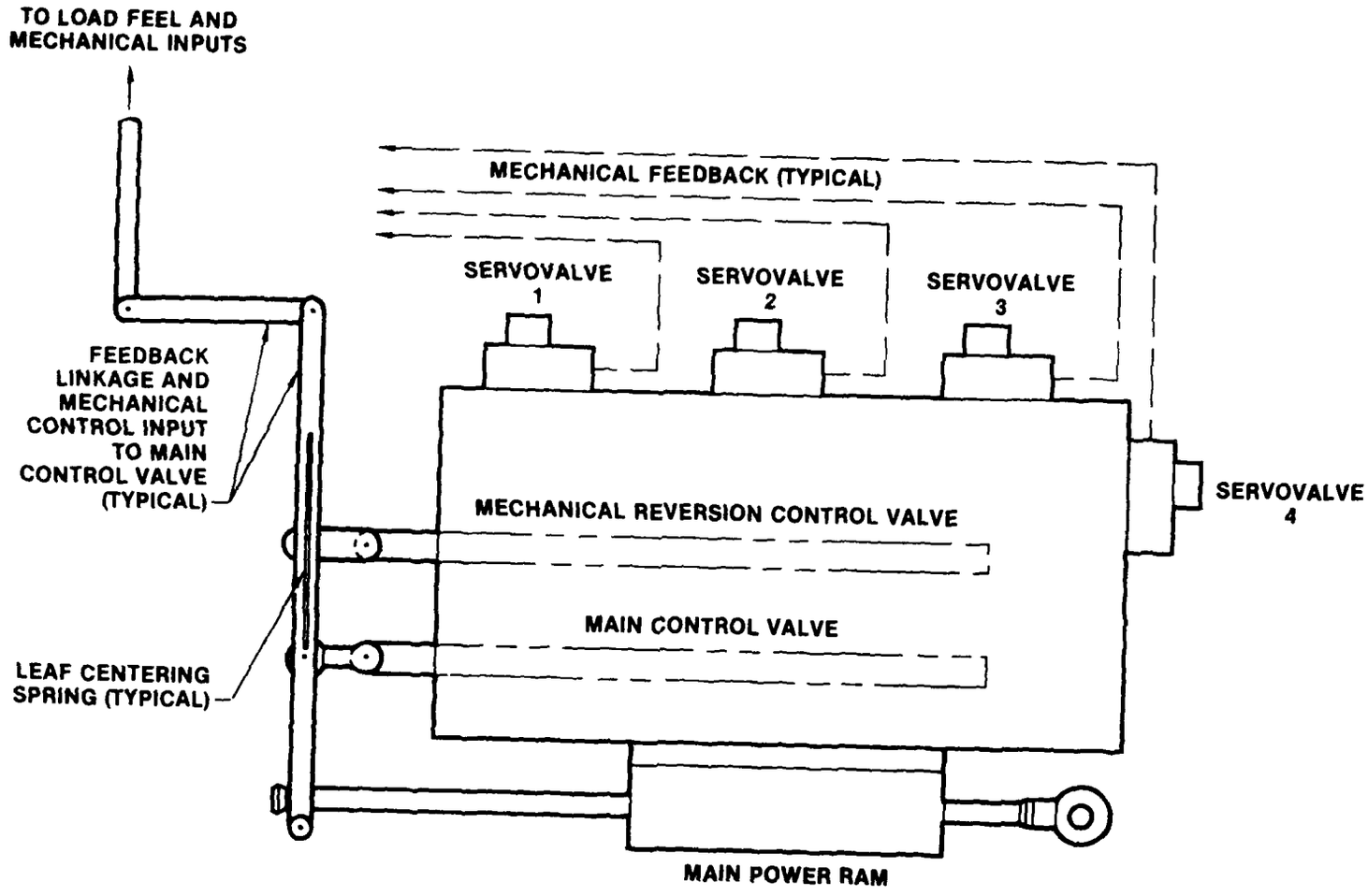

Note:
This diagram is typical for actuator control. Actual detail design may vary. (For example: the mechanical reversion and main control valves could be concentric spools operated independently.

GP23-0550-76

Figure 231.

FLIGHT CONTROLS
MECHANICAL REVERSION FOR FBW SYSTEM
Typical Hydraulic Actuator
Control Inputs and Feedback

	HYDRAULIC SYSTEM* WT (LB)	HYDRAULIC FLUID** WT (LB)	VOL (GAL)	ELIMINATION OF MECHANICAL CONTROL WT (LB)
BASELINE (8,000 PSI)	1,174	187	12.3 (CTFE)	0
BASELINE (3,000 PSI)	1,326	163	23.0 (5606)	0
ALTERNATE 1 (8,000 PSI)	1,022	175	11.5 (CTFE)	85
ALTERNATE 1(a) (8,000 PSI)	1,062	180	11.8 (CTFE)	85
ALTERNATE 2 (8,000 PSI)	897	140	9.2 (CTFE)	85

GP23-0550-280

*Includes fluid weight

**Cost of CTFE = $70/gal.MIL-H-5606 = $4/gal

Notes:

	Wt (lb)	Est cost each
(1) 1 channel force motor	1.5	$ 500
2 channel force motor	1.5	2,000
4 channel force motor	1.5	3,000
Electro-hydraulic valve (EHV)	0.4	1,268
Pressure intensifier	2.5	2,500

(2) 8,000 psi seals do not increase maintenance.

(3) Pressure intensifier maintenance is 1/4 that of a main hydraulic pump for flight control actuators and same as the respective solenoid control valves for the landing gear and speed brake actuators.

(4) Flight computer complexity for alternates 1, 1(a) and 2 will be the same as the F/A-18.

Figure 230.
F-15 CONFIGURATION DATA

2.4.1.2 KC-10A Alternate Configurations - Figures 231 and 232 show typical four channel fail mechanical actuators. The four configurations evaluated were as follows:

		Figure
Baseline (3000 psi):	KC-10A as now configured	233
Baseline (8000 psi):	KC-10A 8000 psi Baseline. Force motors replace EHV's at all locations.	233
Alternate 1 (8000 psi):	Same as Baseline (8000 psi), but in addition the aircraft is configured as a 1990's fly-by-wire aircraft with mechanical backups to the hydraulic flight control actuators. Four channel, fail manual on all flight controls.	234
Alternate 2 (8000 psi):	Same as Alternate 1, but in addition the flight control actuators have pressure intensifiers.	235

A cost summary for each of the five systems is shown in Figure 244. The total LCC of Alternate 2 is the lowest cost option. An adjusted LCC was calculated by translating the configuration weight reduction into an aircraft fuel savings. Alternate 2 remained the lowest cost option.

LCC CATEGORY	MECHANICAL		ADV FLIGHT CONTROL SYSTEM (DIGITAL)		
	3,000 PSI	BASELINE 8,000 PSI (FM)	ALTERNATE 1 (FM)	ALTERNATE 1A (EHV)	ALTERNATE 2 (FM + PI)
DEVELOPMENT	42.0	37.4	59.9	61.5	59.1
HARDWARE	42.0	37.4	50.6	52.2	49.8
SOFTWARE	0	0	9.3	9.3	9.3
INVESTMENT	426.3	459.3	539.3	569.1	530.4
EQUIPMENT	364.2	393.7	422.1	447.8	418.3
INITIAL SPARES	59.0	62.4	114.8	118.8	109.8
OTHER	3.1	3.2	2.4	2.5	2.3
SUPPORT	77.5	80.0	141.1	142.1	126.6
HARDWARE	77.5	80.0	135.1	136.1	120.6
REPLACEMENT SPARES	41.4	44.0	97.1	97.2	86.9
MAINTENANCE MANPOWER	27.6	27.1	30.8	31.4	27.1
OTHER	8.5	8.9	7.2	7.5	6.6
SOFTWARE	0	0	6.0	6.0	6.0
TOTAL LIFE CYCLE COST	545.8	576.7	740.3	772.7	716.1
AIRCRAFT FUEL SAVINGS	–	– 21.3	– 44.9	– 39.3	– 62.5
TOTAL LCC (ADJUSTED)	545.8	555.4	695.4	733.4	653.6

GP23-0550-194

Notes:

1. Cost in millions of 1982 dollars
2. Costs are for 500 shipsets
3. Aircraft fuel savings are for 15 years of operation and are based on total hydrualics and related weight savings
4. Equipment cost is based on a buy of 500 shipsets plus spares

Figure 244.
COST OF HYDRAULICS AND RELATED EQUIPMENT

A comparison of unit production costs is interesting to observe in Figure 245. A comparison between the 8000 psi baseline and Alternate 2 reveals that the cost of flight control computers increases six fold while the cost of miscellaneous components and distribution system decreases by over 50 percent with a net cost advantage still in favor of alternate 2.

COST CATEGORY	MECHANICAL		ADVANCED FLIGHT CONTROL SYSTEM (DIGITAL)		
	REFERENCE 3,000 PSI	BASELINE 8,000 PSI (FM)	ALT 1 (FM)	ALT 1A (EHV)	ALT 2 (FM + PI)
FLIGHT CONTROL ACTUATORS	119	129	106	157	125
UTILITY ACTUATORS	105	111	112	112	124
MISCELLANEOUS COMPONENTS	409	440	219	219	188
DISTRIBUTION SYSTEM	27	35	35	35	27
FLUID	SMALL	1	1	1	1
FLIGHT CONTROL COMPUTERS	61	64	362	362	362
INTEGRATION AND TEST	17	16	29	30	28
TOTAL	738	796	864	916	855
VARIANCE OF COST FROM THAT OF REFERENCE SUBSYSTEM	—	58	126	178	117

Notes:
1. Costs are in thousands of 1982 dollars
2. Costs are based on 500 shipsets

GP23-0550-195

Figure 245.
UNIT (SHIPSET) PRODUCTION COST
Costs in Thousands of 1982 Dollars

2.4.4.5 ACCM Analysis - The data presented for the 3000 psi subsystems are representative of the F-15C. However, the data for the 8000 psi subsystems assume a resized aircraft and not a retrofit of the existing aircraft.

The weight of the 8000 psi hydraulic subsystem was extrapolated from the F-15C 3000 psi system used as a basis for estimating performance and complexity.

Having determined the weight savings for each 8000 psi hydraulic subsystem, the aircraft was resized by growth factor analysis to determine the total aircraft weight savings. The resulting weight savings are then distributed to structure, fuel, engines and various subsystems. The resulting aircraft system weight breakdowns are displayed in Figures 246 and 247. The weights for the F-15C reference system and the deltas are given for comparison.

WEIGHT GROUP	3,000 PSI (REF)		ALT 1 (FM)		DELTA WEIGHT (1)	
	TOTAL WEIGHT	HYDRAULIC CONTRIBUTION	TOTAL WEIGHT	HYDRAULIC CONTRIBUTION	TOTAL WEIGHT	HYDRAULIC CONTRIBUTION
AIRFRAME (LB)	13,718	140.7	13,455	129.2	−263	−11.5
WING	3,651		3,581		−70	
FUSELAGE	6,248	6.8	6,127	6.2	−121	−0.6
VERTICAL TAIL	486		477		−9	
HORIZONTAL TAIL	619		607		−12	
ENGINE SECTION	102		100		−2	
AIR INDICATION	1,465	75.2	1,431	69.2	−34	−6.0
LANDING GEAR NOSE	181	27.5	178	25.2	−3	−2.3
LANDING GEAR MAIN	966	31.2	954	28.6	−12	−2.6
ENGINE (LB)	6,061		5,981		−80	
AVIONICS (LB)	1,845	24.9	1,931	94.2	86	69.3
SUBSYSTEMS (LB)	5,759	1,270.8	5,344	893.3	−415	−377.5
FUEL	1,129	4.1	1,116	3.8	−13	−0.3
HYDRAULICS	433	244.9	403	215.4	−30	−29.5
ACCESSORY DRIVE	482	57.8	475	50.8	−7	−7.0
INSTRUMENT	146		146		0	
ELECTRICAL	615		608		−7	
ARMAMENT	620		620		0	
FURNISHING	293		293		0	
ENVIRONMENTAL	688	3.2	680	3.0	−8	−0.2
SURFACE CONTROLS	778	472.6	501	195.8	−277	−276.8
ENGINE CONTROL	39		38		−1	
LANDING GEAR CONTROLS	251		248		−3	
AUXILIARY GEAR	113		109		−4	
CONTINGENCY	172	488.2	107	424.5	−65	−63.7
TOTAL EMPTY WEIGHT (LB)	27,383	1,436.4	26,711	1,116.7	−672	−319.7
FUEL (LB)	13,455		13,183		−272	
PAYLOAD (LB)	2,040		2,040		0	
OXYGEN (LB)	28		28		0	
CREW (LB)	215		215		0	
UNUSABLE FUEL (LB)	493		493		0	
OIL (LB)	76		76		0	
GUN AND AMMO (LB)	783		783		0	
MISC EQUIPMENT (LB)	50		50		0	
GROSS WEIGHT (LB)	44,523	1,436.4	43,579	1,116.7	−944	−319.7

Note: (1) Negative delta weight denotes savings from the reference system

GP23-0550-196

Figure 246.
AIRCRAFT SYSTEM WEIGHT

WEIGHT GROUP	3,000 PSI (REF)		ALT 2 (FM + PI)		DELTA WEIGHT △1	
	TOTAL WEIGHT	HYDRAULIC CONTRIBUTION	TOTAL WEIGHT	HYDRAULIC CONTRIBUTION	TOTAL WEIGHT	HYDRAULIC CONTRIBUTION
AIRFRAME (LB)	13,718	140.7	13,360	134.6	−358	−6.1
WING	3,651		3,553		−98	
FUSELAGE	6,248	6.8	6,080	6.2	−168	−0.6
VERTICAL TAIL	486		473		−13	
HORIZONTAL TAIL	619		602		−17	
ENGINE SECTION	102		100		−2	
AIR INDICATION	1,465	75.2	1,424	72.2	−41	−3.0
LANDING GEAR NOSE	181	27.5	177	26.2	−4	−1.3
LANDING GEAR MAIN	966	31.2	951	30.0	−15	−1.2
ENGINE (LB)	6,061		5,950		−111	
AVIONICS (LB)	1,845	24.9	1,931	94.2	86	69.3
SUBSYSTEMS (LB)	5,759	1,270.8	5,202	762.4	−512	
FUEL	1,129	4.1	1,110	3.8	−19	−0.3
HYDRAULICS	433	244.9	335	147.0	−98	−97.9
ACCESSORY DRIVE	482	57.8	475	50.8	−7	−7.0
INSTRUMENT	146		146		0	
ELECTRICAL	615		605		−10	
ARMAMENT	620		620		0	
FURNISHING	293		293		0	
ENVIRONMENTAL	688	3.2	677	3.0	−11	−0.2
SURFACE CONTROLS	778	472.6	511	205.3	−267	−267.3
ENGINE CONTROL	39		38		−1	
LANDING GEAR CONTROLS	251		247		−4	
AUXILIARY GEAR	113		109		−4	
CONTINGENCY	172	488.2	36	352.5	−136	−135.7
TOTAL EMPTY WEIGHT (LB)	27,383	1,436.4	26,443	991.2	−940	−445.2
FUEL (LB)	13,455		13,076		−379	
PAYLOAD (LB)	2,040		2,040		0	
OXYGEN (LB)	28		28		0	
CREW (LB)	215		215		0	
UNUSABLE FUEL (LB)	493		493		0	
OIL (LB)	76		76		0	
GUN AND AMMO (LB)	783		783		0	
MISC EQUIPMENT (LB)	50		50		0	
GROSS WEIGHT (LB)	44,523	1,436.4	43,204	991.2	−1,319	−445.2

Note △1 Negative delta weight denotes savings from the reference system

GP23-0550-197

Figure 247.
AIRCRAFT SYSTEM WEIGHT

These weights are then input to MCAIR's Advanced Concepts Cost Model (ACCM) to determine the costs of each subsystem. Each of the 8000 psi hydraulic subsystems is compared with the reference 3000 psi subsystem. Figure 248 presents a weight summary comparison and Figure 249 provides the life cycle cost results for Alternate 1. Similarly Figures 250 and 251 present the weight summaries and costs for Alternate 2.

Alternate 2 is the most economical option from the viewpoint of the total aircraft system level life cycle cost analysis. However, a review of Flight control computer costs for the reference 3000 psi airplane (2 CHANNEL ANALOG) vs the advanced flight control airplane (4 CHANNEL DIGITAL) shows a significant cost penalty. The penalty is $301,000 dollars per aircraft as may be seen in Figure 245. A significant portion of the 8000 psi system LCC benefits is consequently cancelled by the more expensive flight control electronics in the advanced aircraft.

It is essential that the LCC savings be accurately predicted and presented so that the 8000 psi benefits are known. So, the production F-15 with a 3000 psi system was modified from a combination mechanical & 2 channel analog control augmentation system (CAS) to a pure 4 channel digital control-by-wire system. The 4 channel digital system is identical to that used in the advanced F-15 aircraft with 8000 psi systems.

The modified F-15 system including computers and force motors is 59.5 pounds lighter than the Baseline system as shown in Figure 252. The new weight was then used to modify structural, fuel, engine and subsystem weights as was presented and discussed for the advanced F-15 configurations.

The total costs of the resiged modified production F-15 (force motors, 4 channel digital computers) were calculated and are compared with the baseline costs a shown in Figure 253. The cost increase for the modified F-15 for 500 aircraft is $227M.

A comparison of the LCC savings for both production F-15 configuration vs the two advanced F-15 configurations is shown in Figure 254. The improved LCC savings associated with pressure intensifiers is really the savings associated with that increment of weight savings. The same weight increment saved by any other technique would give approximately the same savings. It emphasizes the large benefits accruing with additional weight savings once the basic development costs are written off.

WEIGHT CATEGORY	F-15 3,000 PSI REFERENCE		ALT 1 RESIZED F-15		DELTA (2)	
	TOTAL (3)	HYD (4)	TOTAL (3)	HYD (4)	TOTAL (3)	HYD (4)
AIRFRAME	13,715	140	13,455	130	260	10
ENGINE	6,060	0	5,980	0	80	0
AVIONICS	1,845	25	1,930	95	−85	−70
SUBSYSTEMS	5,760	1,270	5,345	890	415	380
EMPTY WEIGHT	27,380	1,435	26,710	1,115	670	320
FUEL	13,455	—	13,180	—	275	—
PAYLOAD	3,685	—	3,685	—	0	
GROSS WEIGHT	44,520	1,435	43,575	1,115	945	320

GP23-0550-198

Notes:

(1) Weights are in pounds

(2) A positive delta represents a weight savings

(3) Total ACFT - total aircraft weight, including hydraulics and related equipment

(4) Hyd - contribution of hydraulic and related equipment to total aircraft weight

Figure 248.
AIRCRAFT SYSTEM WEIGHT SUMMARY (1)

COST CATEGORY	F-15 3,000 PSI REFERENCE		RESIZED F-15 8,000 PSI ALTERNATE 1		DELTA (NEGATIVE DENOTES SAVING)	
	HYD (2)	TOTAL (3)	HYD (2)	TOTAL (3)	HYD (2)	TOTAL (3)
DEVELOPMENT	42	4,003	60	3,990	18	−13
INVESTMENT	426	14,653	539	14,643	113	−10
FLYAWAY	364	11,048	422	11,030	58	−18
OTHER	62	3,605	117	3,613	55	+8
O&S (4)	78	7,431	141	7,347	65	−84
FUEL	—	2,309	—	2,279	—	−30
TOTAL	546	28,396	740	28,259	196	−137
UNIT FLYAWAY	0.728	22.096	0.844	22.060	0.116	0.036

GP23-0550-282

Notes:

(1) Costs are in millions of 1982 dollars and are for 500 aircraft procurement

(2) Hyd - hydraulics and related equipment cost

(3) TOT - total aircraft cost, including hyd cost

(4) O&S - operations support costs over the 15 year life cycle

Figure 249.
AIRCRAFT SYSTEM LIFE CYCLE COST ANALYSIS OF ALTERNATE 1 (1)

WEIGHT CATEGORY	REFERENCE (3,000 PSI) STANDARD F-15		ALT 2 (8,000 PSI) RESIZED F-15		DELTA (2)	
	TOTAL (3)	HYD (4)	TOTAL (3)	HYD (4)	TOTAL (3)	HYD (4)
AIRFRAME	13,715	140	13,360	135	355	5
ENGINE	6,060	0	5,950	0	110	0
AVIONICS	1,845	25	1,930	95	−85	−70
SUBSYSTEMS	5,760	1,270	5,200	760	560	510
EMPTY WEIGHT	27,380	1,435	26,440	990	940	445
FUEL	13,455	—	13,075	—	380	
PAYLOAD	3,685	—	3,586		0	
GROSS WEIGHT	44,520	1,435	43,200	990	1,320	445

GP23-0550-200

Notes:

(1) Weights are in pounds

(2) A positive delta represents a weight savings

(3) Total ACFT - total aircraft weight, including hydraulics and related equipment

(4) Hyd - contribution of hydraulic and related equipment to total aircraft weight

Figure 250.
AIRCRAFT SYSTEM WEIGHT SUMMARY (1)

COST CATEGORY	REFERENCE (3,000 PSI) STANDARD F-15		ALTERNATE 2 (8,000 PSI) RESIZED F-15		DELTA (NEGATIVE DENOTES SAVING)	
	HYD (2)	TOTAL (3)	HYD (2)	TOTAL (3)	HYD (2)	TOTAL (3)
DEVELOPMENT	42	4,003	59	3,965	17	−38
INVESTMENT	426	14,653	530	14,528	104	−125
FLYAWAY	364	11,048	418	10,942	54	−106
OTHER	62	3,605	112	3,586	50	−19
O&S (4)	78	7,431	127	7,311	49	−120
FUEL	—	2,309	—	2,231	—	−78
TOTAL	546	28,396	716	28,035	170	−361
UNIT FLYAWAY	0.728	22.096	0.837	21.884	0.109	−0.212

GP23-0550-199

Notes:

(1) Costs are in millions of 1982 dollars and are for 500 aircraft procurement

(2) Hyd - hydraulics and related equipment cost

(3) TOT - total aircraft cost, including hyd cost

(4) O&S - operations support costs over the 15 year life cycle

Figure 251.
AIRCRAFT SYSTEM LIFE CYCLE COST ANALYSIS OF ALTERNATE 2 (1)

	MODIFIED F-15 3,000 PSI - DIGITAL WITH FORCE MOTORS	F-15 3,000 PSI BASELINE ANALOG
FLIGHT CONTROL ACTUATORS	177.2	221.0
UTILITY ACTUATORS	207.0	207.0
MISCELLANEOUS	515.5	600.0
DISTRIBUTION SYSTEM	220.0	220.0
FLUID	163.0	163.0
FLIGHT CONTROL COMPUTER	94.2	24.9
TOTAL	1,376.9	1,436.4

GP33-0016-19

Figure 252.
WEIGHT COMPARISON, F-15 BASELINE vs MODIFIED BASELINE

COST CATEGORY	F-15 3,000 PSI REF	RESIZED F-15 3,000 PSI DIGITAL	DELTA (NEGATIVE DENOTES SAVING)
DEVELOPMENT	4,003	4,040	37
INVESTMENT	14,653	14,883	230
FLYAWAY	11,048	11,232	184
OTHER	3,605	3,651	46
O&S	7,431	7,414	−17
FUEL	2,309	2,286	−23
TOTAL	28,396	28,623	227
UNIT FLYAWAY	22.096	22.464	0.368

Notes
(1) Based on 500 aircraft
(2) Cost in millions of dollars

GP33-0016-20

Figure 253.
COST COMPARISON, F-15 BASELINE vs MODIFIED BASELINE

COST ITEM	CONFIGURATION			
	BASELINE 3,000 PSI SYSTEM	MODIFIED BASELINE - FORCE MOTORS, CONTROL-BY-WIRE (NEW AIRFRAME)	8,000 PSI SYSTEM - FORCE MOTORS, CONTROL-BY-WIRE (NEW AIRFRAME)	8,000 PSI SYSTEM - FORCE MOTORS, CONTROL-BY-WIRE PLUS PRESSURE INTENSIFIERS (NEW AIRFRAME)
LCC	28,396	—	28,259	28,035
ΔDECREASE	—	—	137	361
LCC	—	28,623	28,259	28,035
ΔDECREASE	—	—	364	588

GP33-0016-21

Figure 254.
LCC SAVINGS COMPARISON, F-15 BASELINE vs A MODIFIED F-15 BASELINE

2.4.5 KC-10A Life Cycle Cost Analysis

2.4.5.1 General - It is common for LCC to be considered a pivotal parameter and the counterpoise against which the value of design concepts are weighed. Under these circumstances any assessment of candidate hydraulic subsystems that incorporate projected technology advancements would have to be based on the costs and benefits that could be achieved. This portion of the report focuses only on the cost aspects of candidates as they are used in a current USAF inventory KC-10A. This is the baseline system that determined specific requirements, environmental factors, and the nature and intensity of the operational employment.

In applying LCC to the perceived engineering cycle of development to design, test, manufacture, and then use, every effort was made to maintain compatibility with the USAF resource structures and cost categories. The same is true for cost factors, constants, and standards applicable to both the elements of the acquisition and operating and support (O&S) phases. The KC-10A, however, is being treated as a typical large transport/bomber type aircraft and LCC was derived on the basis that the subsystem was being maintained by the Air Force.

Costs generated for this study are based on preliminary data and judgements of selected parameters. This is typical with economic analyses where cost projections are occasioned by the introduction of advanced technology such as with the hydraulic fluid subsystem and increased operating pressure. Therefore, estimates do utilize a combination of methods (discrete, parametric, trend, historical, etc.) but, emphasis was placed on the discrete technique to achieve as much realism and confidence as was possible. Operating and support costs were based on use of the structure provided by the Air Force Operating and Support (USAF CORE) model AFR173-13 (Reference 12).

Costs data development was limited to the impact of the hydraulic system and all other aircraft elements not affected were held constant and deleted from the analysis. Fuel was the only element reported in its entirety and not allocated to the subsystem. There was no logical way to allocate fuel burned to a subsystem.

The information compiled in this section is arranged as close as possible to the manner in which the LCC effort was accomplished.

2.4.5.2 Assumptions, Ground Rules and Guidelines - Ground rules and assumptions were developed as guidelines for the conduct of deriving LCC. The intent was to establish a consistent and valid basis for extrapolating into the future with a minimum of non-certainty. The items delineated in this section represent the principal and significant ones which governed the development of the LCC categories. The information is broken down into three main categories.

a) Economic

1. Costs are expressed in constant 1981 dollars.
2. Total buy of 200 aircraft assumed.
3. Estimates include overhead, G&A profit plus other pricing additives.
4. Costs to arrive at the required state of technology are excluded.
5. Costs include non-recurring and recurring elements as they relate to the specific concept.
6. Material procurements are based on utilization factors applied to design weights.
7. Facilities and capital equipment included for Test and Evaluation Program.
8. One development aircraft assumed - later transferred to active inventory.

b) Technical and Manufacturing

1. Overall configuration remains unchanged.

2. Technology available in study time frame.

3. Design concept achieves equal level of performance - technical feasibility.

4. Equivalent accessibility for maintenance and inspection.

5. Aircraft resized to accommodate subsystem changes.

6. Plant facilities and utilities available and in place (USAF/Contractor) - (Hazard test could be required by the USAF).

7. Conventional labor skills assumed.

8. Labor required for routing, brackets, clips, installations, etc., held constant.

9. Commonality assumed throughout, except where force motors replace EHV's and distribution system.

c) Operating and Support

1. Ten operational bases assumed with 20 program authorization aircraft (operational) (PAA) per base (colocated concept).

2. Single depot site and single test facility.

3. Utilization of 540 FH/PAA/YR programmed (not actual).

4. Three maintenance levels - Organization, Intermediate and Depot.

5. Operating and Support (O&S) costs based on 20 years of steady state operations for each PAA.

6. Hydraulic fluid changed annually per PAA.

7. Maintenance cost derived on a dollar per man-hour basis.

2.4.5.3 Approach

The basic steps by which LCC's were developed are illustrated in Figure 255. These are fundamental procedural steps only and they must not be interpreted as elements of a cost model. The cost analyses tasks accomplished for this study closely followed the steps delineated in Figure 255.

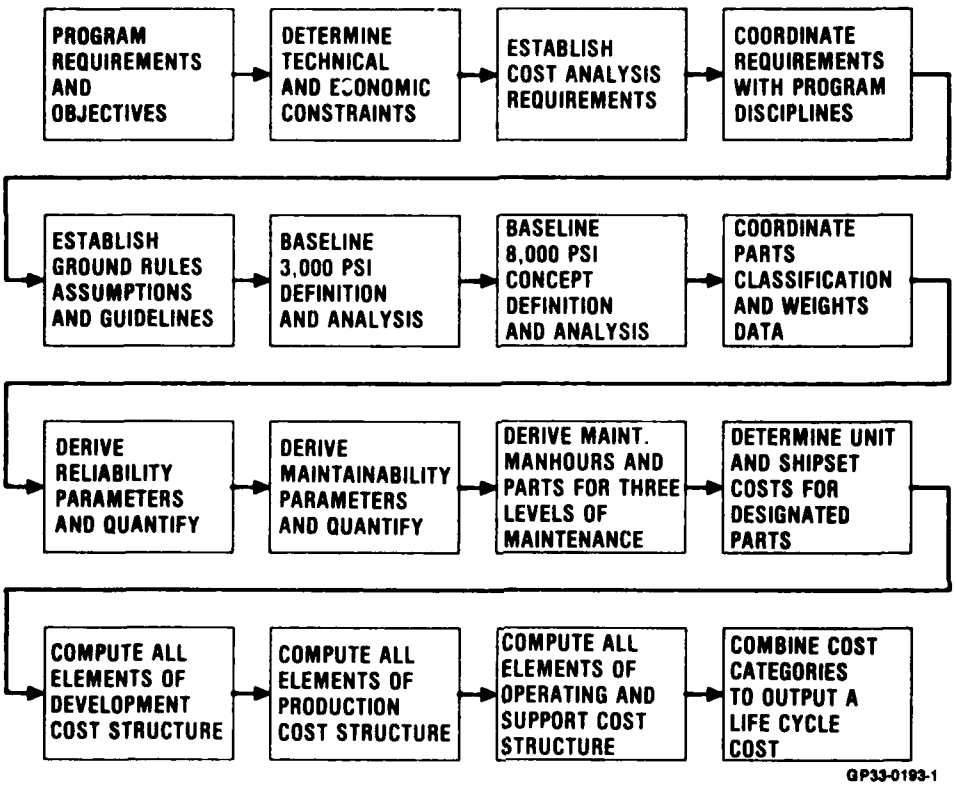

Figure 255.
STEPS IN DERIVING LIFE CYCLE COST DATA

Figure 256 contains the cost element structure of the life cycle cost model. A prerequisite of the estimating process was an understanding of the individual components of this structure because a discrete estimating technique was used to derive all costs.

DEVELOPMENT AND PRODUCTION		OPERATING AND SUPPORT
LABOR RELATED	MATERIAL RELATED	
MANUFACTURING (FAB/ASSY)	TUBING AND OTHER	"O" LEVEL LABOR
PLANNING	TOOLING	"I" LEVEL LABOR
TOOLING	PURCHASED COMPONENTS	"O" LEVEL MATERIAL
ENGINEERING	SUPPORT EQUIPMENT	"I" LEVEL MATERIAL
FLIGHT TEST AND LABS	PUBLICATIONS	REPL SPARES
QR&A	SUPPORT EQUIPMENT	DEPOT MATERIALS
SUPPORT EQUIPMENT	INVENTORY INTROD	FUEL
PUBLICATIONS	FLIGHT TEST AND LABS	HYDRAULIC FLUID
	INITIAL SPARES	MAINTENANCE OF SE
	TEST FACILITIES	PUBS UPDATE
		MODIFICATIONS
		INVENTORY MANAGEMENT

GP33-0193-2

Figure 256.
COST ELEMENTS ESTIMATED

The significant parameters that were quantified in deriving O&S costs are tabulated below. Maintainability and reliability data were generated for both the baseline and the proposed concept.

1. Direct Maintenance Manhours per Flight Hour ("O" and "I" Levels).
2. Mean Time Between Unscheduled Maintenance Actions.
3. Mean Time Between Unscheduled Removals.
4. Remove and Replace Actions.
5. Mean Time Between Failure.
6. Quantity of Parts/Part Required per Shipset.
7. Condemnation Rate of Repairables.
8. Time to Repair Removals at Depot Level.

9. Average Cost of Maintenance Manhour at Base Level.

10. Average Cost of Maintenance Manhour at Depot Level.

11. Average Cost of General Base Materials Cost per Manhour.

12. Average Cost of Maintenance Manhour at Depot Level.

13. Average Cost of General Depot Materials Cost per Manhour.

14. Fuel Burn Rate - Tanker Training Missions.

15. Spares Insurance Level.

These are elements of a second model which was exercised independently to derive the O&S costs. Acquisition was uniquely defined and estimated which necessitated the use of independent models/approaches. The overall methodology for generating the discrete estimates for acquisition is contained in Figure 257.

For each subsystem, its individual components were evaluated with respect to weight, quantity, maintainability, reliability, complexity and their impact on the cost. Part count and weights are respectively shown in Figures 258 and 259. Weight data were used both in the acquisition phase and the O&S phase to derive specific cost elements.

AD-A157 618 FLIGHT WORTHINESS OF FIRE RESISTANT HYDRAULIC SYSTEMS 4/4
VOLUME 1(U) MCDONNELL AIRCRAFT CO ST LOUIS MO
J R JEFFERY ET AL. DEC 84 AFWAL-TR-84-2085
UNCLASSIFIED F33615-80-C-2074 F/G 13/7 NL

END
FILMED
DTIC

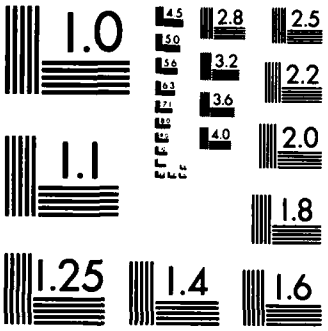

MICROCOPY RESOLUTION TEST CHART
NATIONAL BUREAU OF STANDARDS-1963-A

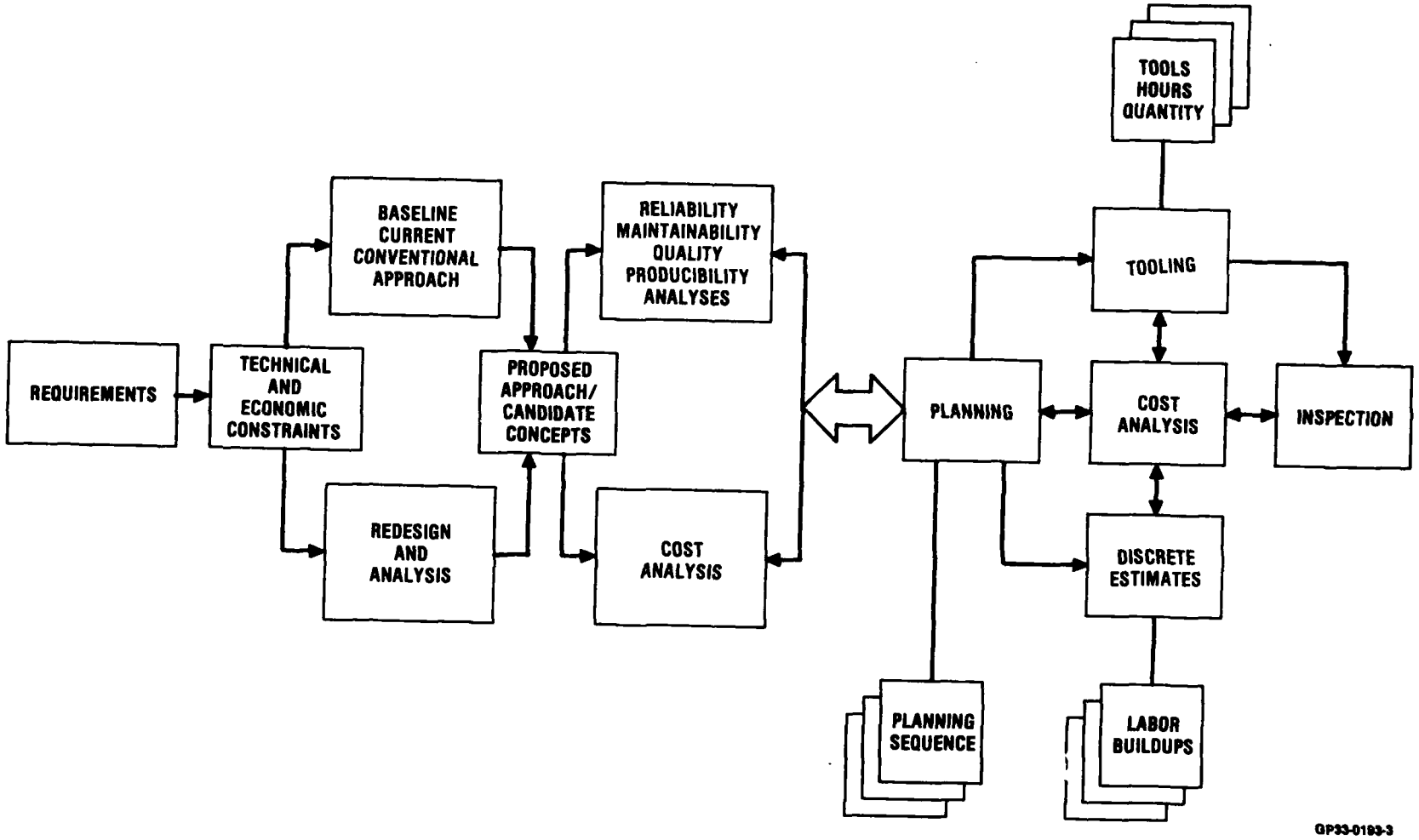

Figure 257.
INTEGRATION OF COST ANALYSIS

COMPONENT CLASSIFICATION	3,000 PSI BASELINE 5606 FLUID	8,000 PSI BASELINE A-02 FLUID
CYLINDERS (TOTAL)	(64)	(64)
FLIGHT CONTROLS	31	31
UTILITY	33	33
ROTATING ELEMENTS	24	24
MANIFOLDS	20	20
CONTROL VALVES	43	43
RESERVOIRS	7	7
MISCELLANEOUS	52	52
DISTRIBUTION SYSTEM	*	*
TOTAL	210	210

*Tubing not listed in part count

GP33-0193-4

Figure 258.
QUANTITY OF PARTS EVALUATED
Per Aircraft

COMPONENT CLASSIFICATION	3,000 PSI BASELINE SYSTEM 5606 HYDRAULIC FLUID			8,000 PSI BASELINE SYSTEM A-02 HYDRAULIC FLUID		
	DRY	WET	TOTAL	DRY	WET	TOTAL
ACTUATORS (TOTAL)	(2,075.3)	(149.4)	(2,224.7)	(2,080.9)	(125.5)	(2,206.4)
FLIGHT	1,238.4	45.1	1,283.5	1,182.2	37.5	1,219.7
UTILITY	836.9	104.3	941.2	898.7	88.0	986.7
ROTATING ELEMENTS	599.2	38.6	637.8	528.9	57.8	586.7
MANIFOLDS	277.8	37.5	315.8	215.3	32.3	247.6
CONTROL VALVES	344.1	24.1	368.2	282.2	20.3	302.5
RESERVOIRS	271.7	119.3	391.0	267.1	168.7	435.8
MISCELLANEOUS	110.6	41.4	152.0	61.0	37.0	99.0
DISTRIBUTION SYSTEM	1,288.0	644.7	1,952.7	673.0	623.4	1,257.0
TOTAL	4,966.7	1,075.0	6,042.2	4,108.4	1,065.0	5,135.0

GP33-0193-5

Figure 259.
HYDRAULIC SYSTEM WEIGHT SUMMARY

2.4.5.4 Results

a) Life Cycle Cost Summary - The life cycle costs for the baseline system (3000 psi) and the candidate system (8000 psi) are summarized in Figure 260. Attention is again called to the O&S values which appear to be excessive when compared to the acquisition categories of development and production. This is only due to the usage of the full value of the fuel costs which accounts for 99% of the O&S costs as reported. Fuel, however, does exhibit the greatest impact on the O&S costs as shown in Figures 261 and 262.

	3,000 PSI	8,000 PSI	DELTA
DEVELOPMENT	55.302	67.747	+12.445
PRODUCTION	396.319	398.293	+1.974
ACQUISITION	451.621	466.040	+14.419
*O&S	5,252.804	5,244.390	--8.441
LIFE CYCLE COST	5,704.425	5,710.430	+5.978

*Operating and support of 200 aircraft for 20 years; and includes full allocation of fuel usage

GP33-0193-6

Figure 260.
LIFE CYCLE COST SUMMARY
1981 Dollars - Millions

In the acquisition phase the driving expenditures occur during development, with the advanced technology concept showing a greater need for funds. This was not unexpected. Production costs, however, for the advanced technology concept is only a meager 0.5% higher than the baseline. This also is not surprising. The cost benefits in this program occur during the operational phase or downstream years and they almost offset the increases that arise in the acquisition phase. The overall increase in cost approximates $1000 per aircraft per year.

b) Cost Substantiation - Figures 261 and 262 respectively contain a breakdown of the LCC's for the baseline and the proposed concept. The data in these figures clearly show that the design engineering cost element during development is the primary source for the higher cost of the proposed concept.

COST CATEGORY	ACQUISITION		COST CATEGORY	OPERATING AND SUPPORT
	DEVELOPMENT	PRODUCTION		
LABOR			BASE MAINTENANCE	6.469
ENGINEERING	33.169	10.873	DEPOT MAINTENANCE	8.633
FLIGHT AND LABORATORY	7.473	—	REPLENISH SPARES	28.810
MANUFACTURING	6.886	113.449	FUEL	5,198.686
ILS	4.311	0.131	HYDRAULIC FLUID	0.818
SUBTOTAL	51.839	124.453	CHANGES, ECPs, MODS	8.028
MATERIALS			INVENTORY MANAGEMENT	0.698
COMPONENTS	1.047	221.339	PUBS UPDATE	0.689
RM&PP	1.236	42.736		5,252.831
FLIGHT AND LABORATORY	0.593	—	TOTAL	5,252.831
ILS	0.587	7.539		
INVENTORY	—	0.252		
FACILITIES	—	—		
SUBTOTAL	3.463	271.866		
TOTAL	55.302	396.319		

GP33-0193-7

LIFE CYCLE COST = $5,704.425 $\overline{M}$

Figure 261.
LIFE CYCLE COST BREAKDOWN
3,000 PSI Baseline
1981 Dollars - Millions

COST CATEGORY	ACQUISITION		COST CATEGORY	OPERATING AND SUPPORT
	DEVELOPMENT	PRODUCTION		
LABOR			BASE MAINTENANCE	9.945
ENGINEERING	43.120	14.135	DEPOT MAINTENANCE	7.566
FLIGHT AND LABORATORY	8.057	—	REPLENISH SPARES	30.720
MANUFACTURING	6.886	113.449	FUEL	5,178.866
ILS	4.380	0.131	HYDRAULIC FLUID	7.157
SUBTOTAL	62.443	127.715	CHANGES, ECPs, MODS	8.749
MATERIALS			INVENTORY MANAGEMENT	0.698
COMPONENTS	1.141	232.795	PUBS UPDATE	0.689
RM&PP	1.120	23.875		5,244.390
FLIGHT AND LABORATORY	0.820	—	TOTAL	5,244.390
ILS	1.068	13.656		
INVENTORY	—	0.252		
FACILITIES	1.155	—		
SUBTOTAL	5.304	270.578		
TOTAL	67.747	398.293		

LIFE CYCLE COST = $5,710.430 $\overline{M}$

GP33-0193-8

Figure 262.
LIFE CYCLE COST BREAKDOWN
8,000 PSI Baseline
1981 Dollars - Millions

During the production phase there are offsetting costs that occur between the labor elements and the material elements. Since, most pivotal elements were estimated using the industrial engineering approach it was established that the manufacture of production components for both systems could be accomplished for equal cost levels. Follow-on or sustaining engineering was increased for the advanced technology concept to account for higher costs as modifications and changes (ECPs) arise during production. The costs for materials of the proposed concept are more expensive than the baseline. These latter higher costs are however, offset by the higher logistics costs. This ILS category increases primarily due to the higher costs of the initial spares.

Figures 263 and 264 are provided to illustrate the delta costs between elements of the baseline and the proposed concept and the translation of these deltas into percentage changes from the baseline. The LCC data generated in this study for 200 tanker/cargo/transport aircraft indicate that for an 8000 psi CTFE hydraulic system versus a 3000 psi MIL-H-5606 hydraulic system the LCC increase is only $5.978 $\overline{M}$.

COST CATEGORY	ACQUISITION		COST CATEGORY	OPERATING AND SUPPORT
	DEVELOPMENT	PRODUCTION		
LABOR			BASE MAINTENANCE	+3.476
ENGINEERING	+9.951	+3.262	DEPOT MAINTENANCE	−1.067
FLIGHT AND LABORATORY	+0.584	—	REPLENISH SPARES	+1.910
MANUFACTURING	0	0	FUEL	−19.820
ILS	+0.069	0	HYDRAULIC FLUID	+6.339
SUBTOTAL	+10.604	+3.262	CHANGES, ECPs, MODS	+0.721
MATERIALS			INVENTORY MANAGEMENT	0
COMPONENTS	+0.094	+11.456	PUBS UPDATE	0
RM&PP	−0.116	−18.861		−8.441
FLIGHT AND LABORATORY	+0.227	—	TOTAL	−8.441
ILS	+0.481	+6.117		
INVENTORY	—	0		
FACILITIES	+1.155	—		
SUBTOTAL	+1.841	−1.288		
TOTAL	+12.445	+1.974		

GP33-0193-9

LIFE CYCLE COST = +$3,952 $\overline{M}$

Figure 263.
LIFE CYCLE COST DELTA
8,000 PSI Over 3,000 PSI Baseline
1981 Dollars - Millions

COST CATEGORY	ACQUISITION		COST CATEGORY	OPERATING AND SUPPORT
	DEVELOPMENT	PRODUCTION		
LABOR			BASE MAINTENANCE	+53.73%
ENGINEERING	+30.00%	+30.00%	DEPOT MAINTENANCE	−12.36%
FLIGHT AND LABORATORY	+7.81%	—	REPLENISH SPARES	+6.63%
MANUFACTURING	0%	0%	FUEL	−0.60%
ILS	+1.60%	0%	HYDRAULIC FLUID	+875.00%
SUBTOTAL	+20.46%	+2.62%	CHANGES, ECPs, MODS	+8.98%
MATERIALS			INVENTORY MANAGEMENT	0%
COMPONENTS	+8.98%	+5.18%	PUBS UPDATE	0%
RM&PP	−9.39%	−44.13%		−0.16%
FLIGHT AND LABORATORY	+38.28%	—	TOTAL	−0.16%
ILS	+81.94%	+81.14%		
INVENTORY	—	0%		
FACILITIES	—	—		
SUBTOTAL	+53.16%	−0.47%		
TOTAL	+22.50%	+0.50%		

LIFE CYCLE COST = +$0.10%

GP33-0193-10

Figure 264.
PERCENT CHANGE IN LIFE CYCLE COSTS
8,000 PSI Baseline Over 3,000 PSI Baseline

2.5 DEMONSTRATION SYSTEM - A demonstration system is required to:

- Determine pumpability of the CTFE fluid at 8000 psi
- Develop acceptable dynamic and static seals
- Verify the concept's effectiveness.

The power levels (pump displacement and actuator output) should be representative of the candidate aircraft and future aircraft. The displacement of the KC-10A and F-15 3000 psi pumps is 2.7 CIPR and 3.1 CIPR respectively. The available selected 8000 psi pump displacement is 0.95 CIPR, approximately one-third of the 3000 psi pumps, as it should be. The KC-10A inboard elevator and F-15 stabilator actuators outputs are very similar. (F-15 stabilator output area, 14.52 in.^{2} extend 13.38 in.^{2} retract: KC-10A inboard elevator output area, 12.32 in^2 extend and retract: these are 3000 psi system outputs.)

The F-15 stabilator was selected as the flight control actuator. In addition, the quad channel Ledex force motor evaluated under Air Force contract F33615-80-C-2010 (Reference 10), was selected for actuator control. The manual control input used in the production F-15 stabilator actuator was eliminated for this demonstration.

The utility actuation function requires a simple, single system actuator plus an on-off solenoid type valve. Typically, the rate of operation is controlled by restrictors. The F-15 trailing edge flap actuator was selected for demonstration of a utility function. The actuator includes an integral control valve.

The demonstration system block schematic is presented in Figure 265. Pressure and return/case drain filters, system relief valves, and check valves are provided as appropriate. The reservoir is a production F-4 power control system unit. The pressure for the bootstrap will be supplied by an accumulator.

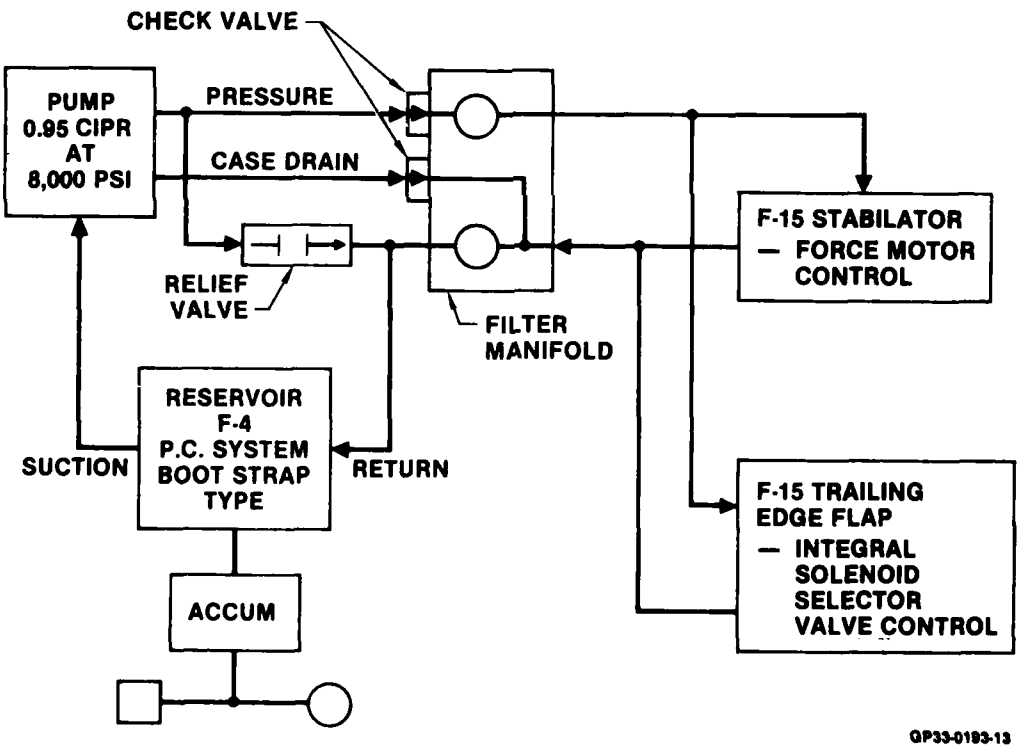

Figure 265.
DEMONSTRATION SYSTEM BLOCK SCHEMATIC

The distribution system will be designed to incorporate or accommodate asymmetric pressure distribution, nonlinear valves, and local velocity reduction. The distribution system will be fabricated from a flared steel fitting and steel lines of appropriate wall thickness for the 8000 psi system pressure.

The F-15 stabilator actuator will also incorporate a nonlinear control valve.

This proposed demonstration system which includes a pump, central system, distribution system, flight control actuator, and utility actuator meets the statement of work requirement.

Seal Approach and Selection - A study was made of reports from recent seal tests, References 2, 3 and 4. Dynamic seals for the flight control actuator and utility actuator were selected by choosing seal configurations that performed well during those tests, particularly the 8000 psi tests of Reference 3. The PNF material was specified by AFWAL/MLBT. The guidelines of Figure 266 are based on information obtained from Vought Corporation. The design criteria is based on their 8000 psi LHS program experience. Figure 267 shows the selected seals and locations from our test actuators.

SEAL MATERIALS

1. ALL SEALS WILL BE MADE OF PNF AND BACKUP RINGS WILL BE MANUFACTURERS RECOMMENDED MATERIAL UNLESS OTHERWISE NOTED. ALL BACKUP RINGS WILL BE UNCUT EXCEPT WHERE NOT FEASIBLE.
2. STATIC SEALS WILL BE MS28775/MS28774 CONFIGURATION.
3. BOSS SEALS WILL BE MS28778.

TOLERANCES FOR SEAL EXTRUSION GAPS

1. TOLERANCES ON PISTONS, RODS AND PISTON BORES SHALL GIVE A CLEARANCE OF 0.001 TO 0.002 IN.
2. CYLINDER BREATHING SHOULD NOT EXCEED 0.001 DIAMETER AT MIDPOINT WITH 8,000 PSI

SEAL GLAND DIMENSION

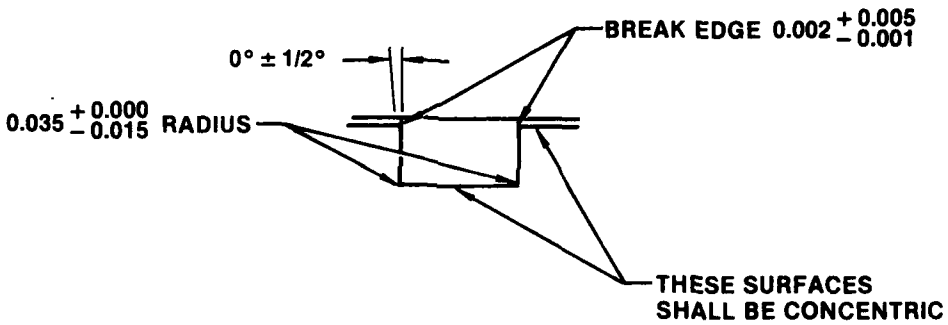

Note: Seal gland shall be per MIL-G-5514 except as noted. The gland depth shall be controlled to give a minimum of 5% squeeze on the seal. All rod seal groove widths shall be the same (2 backup ring widths).

GP33-0193-12

Figure 266.
GUIDELINES FOR SEAL AND GLAND DESIGN

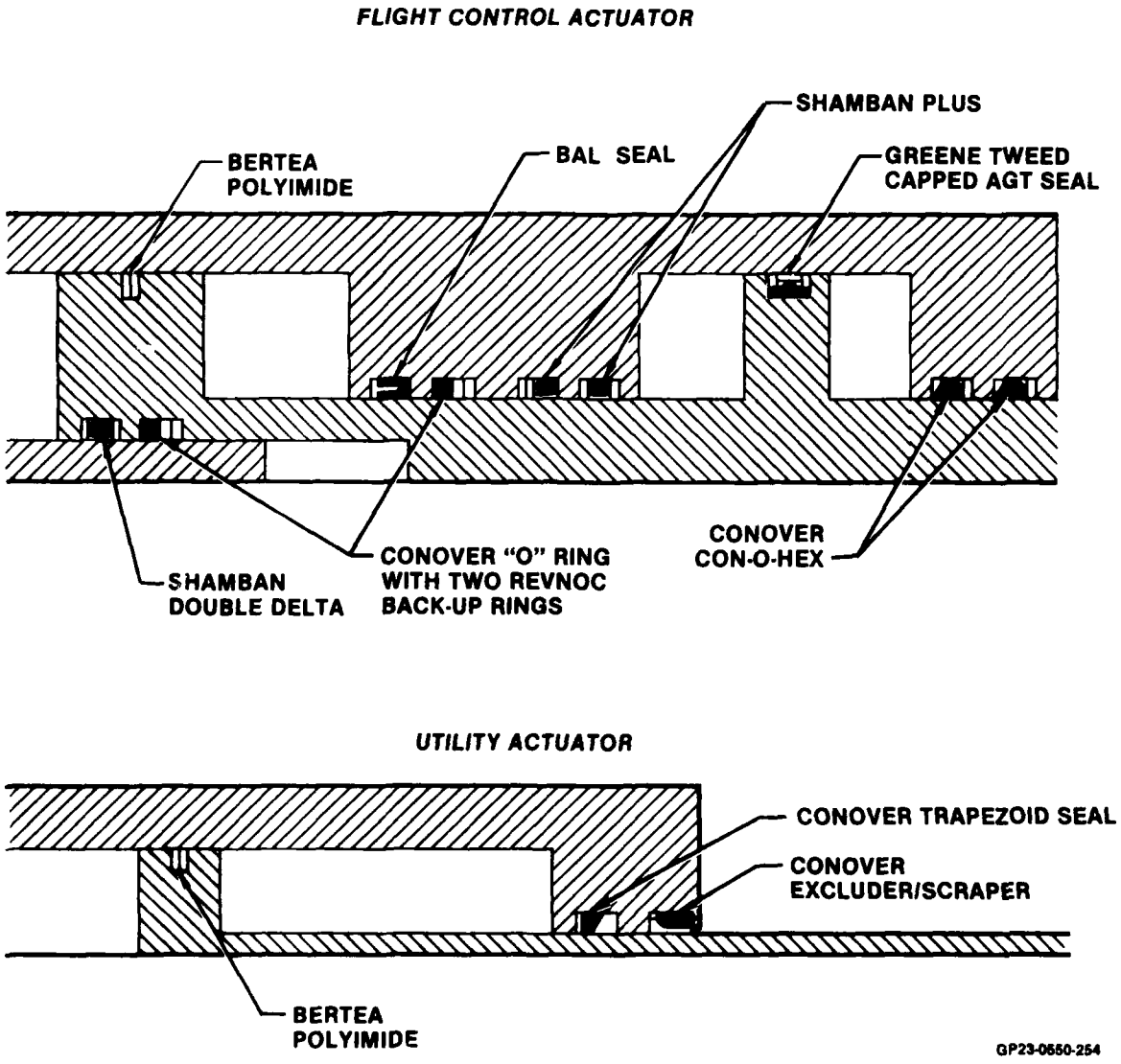

Figure 267.
FLIGHT CONTROL AND UTILITY ACTUATOR
DYNAMIC SEAL CONFIGURATIONS

SECTION III
PHASE I CONCLUSIONS AND RECOMMENDATIONS

3.1 CONCLUSIONS - The results of Phase I indicate that the weight penalty associated with CTFE fluid can be controlled to an acceptable level. Figure 268 summarizes the basic conclusions drawn.

- **CTFE FLUID SYSTEM WEIGHT PENALTY CAN BE CONTROLLED BY**
  - USE OF HIGHER PRESSURES
  - ACCEPTABLE INNOVATIONS
- **CTFE FLUID ACCEPTABLE FOR TYPE II AIRCRAFT HYDRAULIC SYSTEM APPLICATIONS DEVELOPMENT**
  - AT 8,000 PSI SYSTEM PRESSURES
  - REQUIRES GENERATION OF NEW DESIGN CRITERIA (SPECS)

  AND CAN PROVIDE SIGNIFICANT REDUCTION IN FIRE HAZARD
- **AN ADVANCED 8,000 PSI HYDRAULIC SYSTEM USING CTFE FLUID CAN GIVE SIGNIFICANT LCC SAVINGS COMPARED TO 3,000 PSI/ MIL-H-5606 SYSTEMS**

GP23-0550-205

Figure 268.
CONCLUSIONS

3.1.1 Fluid Concerns - The basic fluid system concerns are given in Figure 269. The weight penalty, the water hammer effects, and the effects of a lower bulk modulus are within acceptable limits. The solution to problems of pumping at higher pressures, sealing, and higher null leakage must be demonstrated in Phases II and III.

STRENGTHS

- **RELATIVE NONFLAMMABILITY (SAFETY AND SURVIVABILITY)**
- **INERT AND NONTOXIC**
- **LOW VISCOSITY (A02)**
- **HIGH FLUID STABILITY - RESISTS SHEAR DOWN (A02)**

CONCERNS

- **CTFE FLUID IS HEAVY (DENSITY)**
- **PUMPING AT HIGHER PRESSURES**
- **SIGNIFICANT INCREASE IN WATER HAMMER (1.4 × MIL-H-5606)**
- **REDUCED BULK MODULUS**
- **SEALS**
- **INCREASED LEAKAGE FLOWS WITH A02, i.e., INCREASED SYSTEM HEAT**

GP23-0550-206

Figure 269.
BASIC AREAS OF INTEREST

3.1.2 Concepts/Approaches - Figure 270 lists the candidate approaches considered in Phase I. Higher pressures (8000 psi), force motors, load recovery valves, nonlinear control valves, an "odd-even" distribution system, elimination of the utility control restrictor, asymmetric distribution of line losses, and local velocity reduction were selected and used in the final analysis. Significant weight savings were identified, as shown in Figures 271, 272, and 273.

- **HIGHER SYSTEM PRESSURE**
- **FORCE MOTOR (FLIGHT CONTROLS)**
- **ENERGY CONSERVATION**
  - INTENSIFIERS
  - LOAD RECOVERY VALVES
- **NONLINEAR CONTROL VALVES**
- **"ODD-EVEN" DISTRIBUTION SYSTEM**
- **CONTROL RESTRICTOR ELIMINATION - UTILITY FUNCTIONS**
- **WATER HAMMER CONTROL (FLIGHT CONTROLS)**
  - **WATER HAMMER ATTENUATOR**
  - **ASYMMETRIC LINE LOSS DISTRIBUTION**
  - **LOCAL VELOCITY REDUCTION**
- **WATER HAMMER CONTROL (UTILITY)**
  - WATER HAMMER ATTENUATOR
  - NONLINEAR VALVE PLUS ORIFICE TIME CONTROL
  - FORCE MOTOR VALVE CONTROL

GP23-0550-126

Figure 270.

CANDIDATE CONCEPTS/APPROACHES FOR SYSTEM WEIGHT REDUCTION AND MAINTAINING ACCEPTABLE PERFORMANCE

	F-15	KC-10A	
	MIL-H-5606 (LB)	SKYDROL (LB)	MIL-H-5606 (LB)
FLIGHT CONTROL ACTUATORS	221	1,238	1,238
UTILITY ACTUATORS	207	837	837
MISCELLANEOUS COMPONENTS	544	1,593	1,593
DISTRIBUTION SYSTEM	220	1,817	1,817
FLUID	163	1,360	1,075
TOTAL	1,355	6,845	6,560

GP23-0550-208

Figure 271.

CANDIDATE AIRCRAFT HYDRAULIC SYSTEM WEIGHT BREAKDOWN

Baseline 3,000 PSI

F-15 Aircraft Dry Weight = 28,438 Lb

KC-10A Aircraft Dry Weight = 247,735 Lb

	WEIGHT - LB		
	3,000 PSI	PRELIMINARY 8,000 PSI	FINAL 8,000 PSI
FLIGHT CONTROL ACTUATORS	221	187	207(2)
UTILITY ACTUATORS	207	190	191
MISCELLANEOUS COMPONENTS	544	453	462(1)
DISTRIBUTION SYSTEM	220	157	114
FLUID - CTFE	359	187	146
TOTALS	1,551	1,174	1,120

Notes:

(1) Additional heat exchanger requirement - 10 lb

(2) F-15 stabilator stiffness requirement increased weight 17 lb

GP23-0550-209

Figure 272.
F-15 WEIGHT SUMMARY

	WEIGHT - LB		
	3,000 PSI	PRELIMINARY 8,000 PSI	FINAL 8,000 PSI
FLIGHT CONTROLS	1,238	1,217	1,182
UTILITY ACTUATORS	837	709	899
MISCELLANEOUS COMPONENTS	1,593	1,502	1,474(1)
DISTRIBUTION SYSTEM	1,288	763	673
FLUID - CTFE	2,300	1,196	908
TOTALS	7,256	5,387	5,136

Notes:

(1) Heat exchangers added 91 lb total

GP23-0550-210

Figure 273.
KC-10A WEIGHT SUMMARY

Figure 271 presents the weight summary of the candidate F-15 and KC-10 baseline hydraulic systems. Figures 272 and 273 summarize the F-15 and KC-10 weight savings associated with the selected concepts.

3.1.3 Follow-on Concepts - Two other concepts are being evaluated which promise additional benefits. They are:

- o Pressure Intensifier (P.I.) which can allow a significant reduction in peak power, and hence system weight.
- o A flight control actuator control valve modification which can positively control the null leakage energy loss.

3.1.4 Life Cycle Costs (LCC) - The use of the 8000 psi system and selected concepts will result in significant LCC savings when used in a new aircraft. Figure 274 summarizes the F-15 aircraft LCC assessment. A comparison of the modified Production 3000 psi F-15 (Configuration C) with a new F-15 design (Configuration E) allowing 3:1 weight savings shows a cost saving of 588M.

GROUND RULES

1982 DOLLARS

15 YEAR OPERATIONAL LIFE

500 SHIPSETS OF EQUIPMENT

CONFIGURATION

A F-15 WITH EXISTING 3,000 PSI HYDRAULIC AND MECHANICAL FLIGHT CONTROL (PRODUCTION AIRFRAME)

B MODIFIED F-15 WITH 8,000 PSI HYDRAULIC AND MECHANICAL FLIGHT CONTROL WITH FORCE MOTORS (PRODUCTION AIRFRAME)

C MODIFIED PRODUCTION F-15 WITH 3,000 PSI SYSTEM AND 4 CHANNEL DIGITAL CONTROL-BY-WIRE REPLACING THE COMBINATION MECHANICAL AND 2 CHANNEL ANALOG CAS FLIGHT CONTROLS

D 8,000 PSI HYDRAULIC WITH FORCE MOTORS · CONTROL-BY-WIRE (NEW AIRFRAME)

E 8,000 PSI HYDRAULIC WITH FORCE MOTORS AND PRESSURE INTENSIFIERS (NEW AIRFRAME) CONTROL-BY-WIRE

COSTS

HYDRAULIC/FLIGHT CONTROL EQUIPMENT LIFE CYCLE COST $M̄ 1982		
COST ITEM	CONFIGURATION	
	A	B
EQUIPMENT LCC	546	576
FUEL SAVINGS	–	–21
TOTAL LCC	546	555
ΔINCREASE	–	9

AIRCRAFT SYSTEM LIFE CYCLE COST $M̄ 1982			
COST ITEM	CONFIGURATION		
	C*	D*	E*
LCC	28,623	28,259	28,035
ΔDECREASE	–	364	588

*A new airframe design saves a total of 3 lb weight for each 1 lb of hydraulic system weight

GP33-0016-22

Figure 274.
F-15 LIFE CYCLE COST ASSESSMENT

Comparing the production 3000 psi F-15 (Configuration A) to a modified 8000 psi F-15 (Configuration B) shows a total life cycle cost increase of only $9,000,000 for 500 aircraft. Figure 275 shows the KC-10A modified 8000 psi (Configuration B) is only increased $4,000,000 over the production 3000 psi KC-10A (Configuration A) for 200 aircraft. It should be noted that these comparisons do not include nonrecurring ground support costs.

GROUND RULES

1981 DOLLARS

20 YEAR OPERATIONAL LIFE

200 PROCURED AND OPERATING AIRCRAFT

CONFIGURATION

A KC-10A WITH EXISTING 3,000 PSI HYDRAULIC AND MECHANICAL FLIGHT CONTROLS (PRODUCTION AIRFRAME)

B MODIFIED KC-10A WITH 8,000 PSI HYDRAULIC AND MECHANICAL FLIGHT CONTROLS AND WITH FORCE MOTORS (FLY-BY-WIRE NOT EVALUATED - FACTORS JUSTIFYING FLY-BY-WIRE INSENSITIVE TO USE OF HIGHER PRESSURE AND/OR CTFE FLUIDS) (PRODUCTION AIRFRAME)

HYDRAULIC SYSTEM LIFE CYCLE COST $M̄ 1981		
COST ITEM	CONFIGURATION	
	A	B
EQUIPMENT LCC	1.0	+ $26M̄ (5.1%)
FUEL SAVINGS	1.0	– $22M̄ (0.4%)
TOTAL LCC	–	+ $4M̄

GP23-0550-271

Figure 275.
KC-10A LIFE CYCLE COST ASSESSMENT

3.1.5 Fluid Modifications - Analysis evaluating variations in fluid viscosity indicate it would be beneficial to reduce the maximum viscosity at -65°F to 750-800 centistokes from 1200 centistokes. An important assumption used in the studies is that the viscosities at intermediate and high fluid temperatures can be reduced in similar proportions (35%).

3.2 RECOMMENDATIONS - The recommendations are summarized in Figure 276.

- PROCEED WITH DESIGN, FABRICATION, AND TESTING OF AN 8,000 PSI CTFE A02 FLUID SYSTEM
- COMPLETE DEVELOPMENT OF SEALS COMPATIBLE WITH CTFE FLUID AT 8,000 PSI AND TYPE II SYSTEM REQUIREMENTS
- LIMIT CTFE A02 FLUID VISCOSITY AT −65°F TO 800 CENTISTOKES MAXIMUM IN THE FLUID PROCUREMENT SPECIFICATION
- CONTINUE TO EXPLORE OTHER APPROACHES FOR WEIGHT REDUCTION

GP23-0550-212

Figure 276.
RECOMMENDATIONS

3.2.1 Other Approaches - Pressure intensifiers and control valve modifications are additional approaches which are being worked. If benefits can be confirmed and analysis shows definite feasibility, it is suggested that the program be expanded to provide for fabrication and testing of these techniques.

SECTION IV
DATA ACCESSION LIST/INTERNAL

The documents listed below were generated in-house at MCAIR as a result of this contract. These documents in general contain detail study information and are available to AFWAL/POOS on request.

1. Fluid Property Data Rev A 9/29/81.

2. Hydraulic Tube Sizing and Weight Factors 1/15/82.

3. F-15 High Pressure CTFE Actuator Study Volumes I, II, II and IV 1/15/82.

4. KC-10A High Pressure CTFE Actuator Study Volumes I, II, and III 1/158/28.

5. KC-10A Distribution System Sizing 1/15/82.

6. F-15 Distribution System Sizing 1/15/82.

7. KC-10A Weight Summary 1/15/82.

8. KC-10A Thermal Analysis 1/15/82.

9. KC-10 Reliability Analysis 1/15/82.

SECTION V
REFERENCES

1. Deshazer, R. F., MDC Report A4577, "Analysis and Performance Evaluation - Aiding Load and Energy Recovery Hydraulic Valve Concept", Issued 10 January 1977.

2. Graham, T. L. and Berner, W. E., Report AFML-TR-79-4143, "Development of Seals for Nonflammable Hydraulic Fluids, January 1980.

3. Whitfill, D. E., Report USAAVRADCOM-TR-81-D-17, "Hydraulic System Seal Development", August 1981.

4. Olsen, R. B., Report AFWAL-TR-81-2066, "Dynamic Seals for Advanced Hydraulic Systems", August 1981.

5. Raymond, E. T., Report AFWAL-TR-80-2112, "Fire Resistant Aircraft Hydraulic System", July 1982.

6. Klause, D. R., Report AFML-TR-67-107 Part 1, "Fluids, Lubricants, Fuels and Related Materials - 1967".

7. MIL-HDBK-5C, dated 30 June 1981.

8. Arendarski, M., MDC Report A1063, "Structural Analysis Report, Stabilator Hydraulic Servocylinder", Rev. C, dated 5 August 1974.

9. Douglas Hydraulics Manual, March 1979.

10. Report AFWAL-TR-81-2032, "Advanced Single Stage Control Valve for Hydraulic Actuators", April 1981, under Air Force Contract F33615-80-C-2010.

11. R.C.A. Price (Parametric Review of Information for Costing and Evaluation) Systems, R.C.A. Corporation, Route 38, Cherry Hill, New Jersey.

12. Air Force Operating and Support (USAF CORE) model AFR173-13.

☆U.S.Government Printing Office: 1985 —559-065/20861

END

FILMED

9-85

DTIC

REPRODUCED AT GOVERNMENT EXPENSE