AD-A150 929 DIAGRAMS OF CHEMICAL AND ELECTROCHEMICAL EQUILIBRIA IN THE PRESENCE OF OX..(U) CENTRE BELGE D'ETUDE DE LA CORROSION BRUSSELS M POURBAIX NOV 84 EOARD-TR-85-04 1/1

UNCLASSIFIED AFOSR-84-0141 F/G 7/4 NL

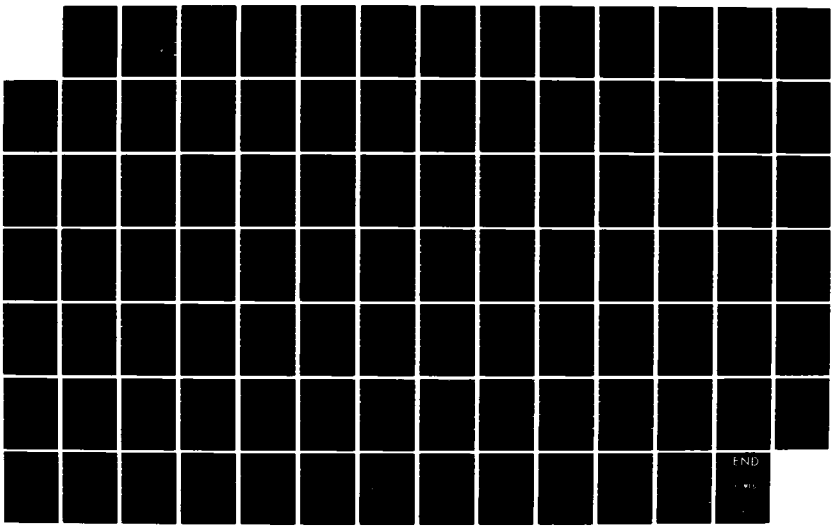

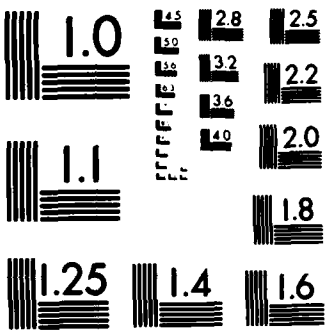

MICROCOPY RESOLUTION TEST CHART
NATIONAL BUREAU OF STANDARDS-1963-A

REPRODUCED AT GOVERNMENT EXPENSE

CENTRE BELGE D'ETUDE DE LA CORROSION
A.S.B.L.
BELGISCH STUDIECENTRUM VOOR CORROSIE
V.Z.W.D.
BELGIAN CENTER FOR CORROSION STUDY
N.P.A.

EOARD-TR-85 04

CEBELCOR

AVENUE PAUL HEGER, GRILLE 2
1050 BRUXELLES

PAUL HEGERLAAN, HEK 2
1050 BRUSSEL

RA.28

AD-A150 929

DIAGRAMS OF CHEMICAL AND ELECTROCHEMICAL EQUILIBRIA IN THE PRESENCE OF OXYGEN AND SULPHUR.

Grant: AFOSR-84-0141

for the E.O.A.R.D, 223 Old Marylebone Road, London NW1 5TH, England

Principal Investigator: Prof. Dr. Ing. Marcel POURBAIX

Final Report, November 1984.

DTIC FILE COPY

DTIC
ELECTE
MAR 6 1985
A

Document pour usage personnel
Document voor persoonlijk gebruik
Document for personal use

Exemplaire remis le
Exemplaar afgegeven op .....
Copy delivered on

à
aan .....
to

This document has been approved for public release and sale; its distribution is unlimited.

TEL
Service administratif
Administratieve dienst
Administrative service 02 / 648 63 96

Laboratoire et service technique
Laboratorium en technische dienst
Laboratory and technical service 02 / 648 35 16

Telegr. & Telex : 23089 - Unwip - B

85 02 8

REPRODUCED AT GOVERNMENT EXPENSE

DEPARTMENT OF THE AIR FORCE
AIR FORCE OFFICE OF SCIENTIFIC RESEARCH (AFSC)
EUROPEAN OFFICE OF AEROSPACE RESEARCH AND DEVELOPMENT
BOX 14, FPO NEW YORK 09510

REPLY TO ATTN OF: LSP/Autovon 235-4318

6 February 1985

SUBJECT: EOARD-TR-85-04, Diagrams of Chemical and Electrochemical Equilibria in the Presence of Oxygen and Sulphur

TO: DTIC/Air Force Liaison Representative
Cameron Station
Alexandria, VA 22314

1. I certify that the subject TR has been reviewed and approved for public release by the controlling office and the information office in accordance with AFR 80-45/AFSC Sup 1. It may be made available or sold to the general public and foreign nationals.

2. Distribution statement A appears on the subject TR as required by AFRs 80-44 and 80-45.

Larell K. Smith

LARELL K. SMITH
Major, USAF
Chief, Physics/Physical Chemistry

2 Atch
1. EOARD-TR-85-04 (2 cys)
2. DD Form 50

Copy to: EOARD/CMX

CENTRE BELGE D'ETUDE DE LA CORROSION

C E B E L C O R

RAPPORTS TECHNIQUES

RT. 283 - Equilibres chimiques et électrochimiques en présence d'une phase gazeuse. 12. Soufre-fer.

par ZHANG Zhongcheng, ZHANG Heming, YANG Xizhen et Marcel POURBAIX

Résumé:

En se basant sur des données thermodynamiques publiées, on établit des diagrammes qui représentent l'influence de la température et de la pression sur les conditions d'équilibre de l'ensemble de 20 réactions auxquelles peuvent participer les 18 substances suivantes:

- substances solides: $S\alpha$, $S\beta$, $Fe\alpha$, $Fe\gamma$, $Fe\delta$, $FeS\beta,\gamma$ (troilite), $FeS_{1+x}\beta$ (pyrrhotite hexagonale basse température), $FeS_{1+x}\gamma$ (pyrrhotite hexagonale haute température), FeS_2 (pyrite)
- substances liquides: *S, Fe, FeS, FeS_{1+x}*
- substances gazeuses: (S_1), (S_2), (Fe), (FeS).

On applique ces diagrammes à l'étude de l'influence de la température et de la pression sur la stabilité de la troilite et de la pyrite et sur la stabilité et la composition de la pyrrhotite hexagonale haute température $FeS_{1+x}\gamma$.

Il est très probable que la volatilisation du sulfure ferreux qui se produit par chauffage résulte, non pas de la formation du sulfure ferreux gazeux (FeS), mais de sa décomposition avec formation de (Fe), (S_2) et (S_1) gazeux. Les données thermodynamiques actuellement admises pour (FeS) gazeux sont donc probablement inexactes et devraient être corrigées.

Mots-clefs:

Equilibres chimiques - équilibres électrochimiques - potentiels d'électrode (par rapport à une électrode de référence à soufre standard E_{ess}) - soufre - fer - troilite - pyrrhotite - pyrite.

RT. 283 - Chemical and electrochemical equilibria in the presence of a gaseous phase. 12. Sulphur - iron.

by ZHANG Zhongchen, ZHANG Heming, YANG Xizhen and Marcel POURBAIX.

Summary:

On the basis of published thermodynamic data, one establishes diagrams representing the influence of temperature and pressure on the equilibrium conditions of the whole of 20 reactions, where the 18 following substances may take part:

- solid substances: $\alpha,\beta S$ (sulphur), $\alpha,\gamma,\delta Fe$ (iron), $\beta,\gamma FeS$ (troilite), $\beta,\gamma FeS_{1+x}$ (pyrrhotite), FeS_2 (pyrite)
- liquid substances: *S, Fe, FeS, FeS_{1+x}*
- gaseous substances: (S_1), (S_2), (Fe), (FeS).

These diagrams are applied to the study of the influence of temperature and pressure on the stability of troilite FeS and pyrite FeS_2, and on the stabi-

Gamma

lity and composition of high temperature hexagonal pyrrhotite γFeS_{1+x} and of molten ferrous sulphide.

It is most likely that the volatilisation of ferrous sulphide which occurs by heating does not result in the formation of gaseous (FeS), but in its decomposition with formation of (Fe), (S_2) and (S_1).
The thermodynamic data presently admitted for gaseous (FeS) are thus probably wrong and should be revised.

Key-words: Cont'd

Chemical equilibria - ~~electrochemical equilibria~~ - equilibrium diagrams, electrode potentials (versus a standard sulpur reference electrode E_{sse}) sulphur - iron - troilite - pyrrhotite - pyrite.

Esubsse

RT. 284 - Equilibres chimiques et électrochimiques en présence d'une phase gazeuse. 13. Oxygène - soufre - fer.

par YANG Xizhen, ZHANG Heming, ZHANG Zhongcheng et Marcel POURBAIX.

Résumé:

En se basant sur des données thermodynamiques publiées, on établit des diagrammes qui représentent l'influence de la température et de la pression sur les conditions d'équilibre de l'ensemble de 48 réactions auxquelles peuvent participer les 40 substances suivantes:

- substances solides: O_2, O_3, $S\alpha,\beta$, $Fe\alpha,\gamma,\delta$, $Fe_{1-x}O$, Fe_3O_4, $Fe_{3-y}O_4$, Fe_2O_3, SO_2, SO_3, $\beta,\gamma FeS$, $FeS_{1+x}\beta,\gamma$, FeS_2, $FeSO_4$, $Fe_2(SO_4)_3$
- substances liquides: O_2, S, Fe, $Fe_{1-x}O$, $Fe_{3-y}O_4$, Fe_2O_3, FeS, FeS_{1+x}
- substances gazeuses: (O_1), (O_2), (O_3), (S_1), (S_2), (S_6), (S_8), (Fe), (S_2O), (SO), (SO_2), (SO_3).

On applique ces diagrammes à l'étude de l'influence de la température et de la pression sur la stabilité et la décomposition de $FeSO_4$ et $Fe_2(SO_4)_3$, sur l'action catalytique de l'oxyde ferrique sur l'oxydation du (SO_2) en (SO_3) et sur la corrosion à haute température du fer en présence d'atmosphères gazeuses contenant des dérivés de l'oxygène et du soufre.

Mots-clefs:

Equilibres chimiques - équilibres électrochimiques - potentiels d'équilibre - catalyse - sulfate ferreux - sulfate ferrique - corrosion à haute température.

RT. 284 - Chemical and electrochemical equilibria in the presence of a gaseous phase. 13. Oxygen - sulphur - iron.

by YANG Xizhen, ZHANG Heming, ZHANG Zhongcheng and Marcel POURBAIX.

Summary:

On the basis of published thermodynamic data, one establishes diagrams representing the influence of temperature and pressure on the equilibrium conditions of the whole of 48 récations where the 40 following substances may take part:

solid substances: O_2, O_3, αS, βS, αFe, γFe, δFe, $Fe_{1-x}O$, Fe_3O_4, $Fe_{3-y}O_4$, Fe_2O_3, SO_2, αSO_3, $\beta,\gamma FeS$, $\beta,\gamma FeS_{1+x}$, FeS_2, $FeSO_4$, $Fe_2(SO_4)_3$
liquid substances: O_2, S, Fe, $Fe_{1-x}O$, $Fe_{3-y}O_4$, Fe_2O_3, FeS, FeS_{1+x}
gaseous substances: (O_1), (O_2), (O_3), (S_1), (S_2), (S_6), (S_8), (Fe), (S_2O), (SO), (SO_2), (SO_3).

Cont'd

../..

These diagrams are applied to the study of the influence of temperature and pressure on the stability and decomposition of $FeSO_4$ and $Fe_2(SO_4)_3$, on the ferric oxide as a catalyst for the oxidation of (SO_2) to (SO_3), and on the high temperature corrosion of iron in gaseous atmospheres containing oxygen and sulphur derivates. Originator supplied keywords include:

Key-words:

Chemical equilibria, electrochemical equilibria, equilibrium potentials, catalysis, ferrous sulphate, ferric sulphate, high temperature corrosion,

A1

ZHM.MP.2620 November 1984

ZHC RT. 283

E. 188

CHEMICAL AND ELECTROCHEMICAL EQUILIBRIA IN THE PRESENCE OF A GASEOUS PHASE *

S-Fe 12. SULPHUR-IRON

by

ZHANG Zhongcheng**, ZHANG Heming**, YANG Xizhen**
and Marcel POURBAIX***

SUMMARY

pages

1. SUBSTANCES CONSIDERED AND NOT CONSIDERED 3
2. TEMPERATURES AND ENTHALPIES OF TRANSFORMATION OF THE CONSIDERED CONDENSED SUBSTANCES 3
3. THERMODYNAMIC DATA 4
   3.1 Standard Chemical Potentials μ° (or standard free enthalpies of formation ΔG_f°) 4
   3.2 Reactions and Equilibria Considered
   Formulation of the Standard Free Enthalpies of Reactions ΔG_r° 4
   3.3 Equilibrium Conditions of the Considered Reactions 5
4. EQUILIBRIUM DIAGRAMS AND THEIR INTERPRETATION 6
   4.1 The Setting-up of the Equilibrium Diagrams 6
      4.1.1 Figure 1 Vapor pressure and decomposition pressures of FeS (troilite) 6

---

* The present work is a continuation of similar work relating to systems O, H, O-Fe, O-H, O-H-Fe, C, O-C, O-C-Fe, S and O-S (see ref. (1) and (2) pp.59 - 89)

** Shandong University of Applied Sciences,Jinan, China.

*** Belgian Center for Coorosion Study, CEBELCOR, Brussels, Belgium.

pages

4.1.2. Figures 2 and 3 Equlibrium diagram $\log p_{S_2} = f(1/T)$ for the system S-Fe with considerations of the pyrrhotite of formula $FeS_{1.140}$ 8

4.1.3. Figures 6 to 7 and 9 to 11 Equilibrium $\log p_{S_2} = f(1/T)$ and $E_{sse} = f(T)$ for the system S-Fe with considerations of pyrrhotite of different formulae 8

a). Equilibrium diagram based on the data given in the JANAF tables 8

b). Equilibrium diagram taking into account the work of T.ROSENQVIST[5] (figures 4 to 7) 9

c). Equilibrium diagram taking into account the work of P.TOULMIN and P.B.Jr.BARTON[7] (1964) 10

4.2. Metallic Iron 13

4.3. The Stoichiometric Ferrous Oxide FeS(troilite) .. 14

4.4. The Non-stoichiometric Ferrous Oxide FeS_{1+X} (pyrrhotite) 15

4.5. Ferric Sulphide FeS_2 (pyrite) 17

4.6. Equilibrium Diagram for the System S-FeS of the S%=f(T) type 18

ACKNOWLEDGEMENT 19

BIBLIOGRAPHY 20

INDEX OF TABLES 23

INDEX OF FIGURES 37

1. SUBSTANCES CONSIDERED AND NOT CONSIDERED

	Considered	Not considered
Solid substances	αS (rhombic)	
	βS (monoclinic)	
	$\alpha, \gamma, \delta Fe$	
	$\beta, \gamma FeS$ (troilite)	
	$\alpha, \beta, \gamma FeS_{1+x}$ (pyrrhotite)	
	$\alpha, \beta, \gamma FeS_{1.140}$ (or $Fe_{0.877}S$)	
	FeS_2 (pyrite)	FeS_2 (marcasite)
Liquid substances	S	
	Fe	
	FeS	
	FeS_{1+x}	
Gaseous substances	$(S_1), (S_2)$	$(S_3), (S_4), (S_5),$
	(Fe)	$(S_6), (S_7), (S_8)$
	(FeS)	

2. TEMPERATURES AND ENTHALPIES OF TRANSFORMATION OF THE CONSIDERED CONDENSED SUBSTANCES.

	Equilibrium temperatures T(°K)	Enthalpies of transformation ΔH(calories.mole^{-1})	ref.
$\alpha S/\beta S$	368.3	95.7	(3),p.930
$\beta S/S$	388.4	412.8	(3),p.931
$\alpha Fe/\gamma Fe$	1184	215	(3),p.828
$\gamma Fe/\delta Fe$	1665	200	(3),p.828
$\delta Fe/Fe$	1809	3300	"
$\beta Fe_{0.877}S/\gamma Fe_{0.877}S$	598	95	(3),p.834
or $\beta FeS_{1.140}/\gamma FeS_{1.140}$	"	108	"

Triple points	Equilibrium temperature(°K)	Equilibrium electrode potentials E_{sse} (mv)
A. $FeS_2/\beta FeS_{1+x}/\gamma FeS_{1+x}$	598	-310*
B. $FeS_2/S/\gamma FeS_{1+x}$	1020?	+40*

C.	$\gamma FeS_{1+x}/S/FeS_{l+x}$	1210?	+100*
E.	$\gamma FeS_{1+x}/\gamma Fe/FeS_{l+x}$	1261	-430*
F.	$\gamma FeS/\alpha Fe/\gamma Fe$	1184	-450*
G.	$\delta FeS/\gamma FeS/\alpha Fe$	598	-610*
H.	$\gamma Fe/\delta Fe/FeS_{l+x}$	1665	-410*

3. THERMODYNAMIC DATA

3.1. Standard chemical potentials μ° (or standard free enthalpies of formation ΔG_f°) (tables I and II)

Table I (page 24) gives, for different temperatures from zero till 6000°K, values of standard chemical potentials admitted for the substances considered in the present work. All values in table I are given by the JANAF tables (ref.(3)). However, as the degree of sulphidation of iron sulphides increases according to the order FeS, $Fe_{0.877}S$ and FeS_2, we have changed $Fe_{0.877}S$ into $FeS_{1.140}$, so that this order appears as FeS, $FeS_{1.140}$ and FeS_2. The values of $\mu^{\circ}_{FeS_{0.877}}$ given by JANAF have thus been changed into corresponding values for $FeS_{1.140}$.

The values of standard chemical potentials μ° given in table I will be used throughout the present work for the calculation of the equilibrium diagrams. Some of these values should be considered as provisional and subject to improvement.

3.2 Reactions and equilibria considered Formulation of the standard free enthalpies of reaction ΔG_r° (table II)

In the present work, relating to the sulphur-iron system, we intend to establish equilibrium diagrams as a function of the free enthalpy of reaction per mole of biatomic gaseous sulphur, RT ln p_{S_2}, as well as of the electrode potential versus a standard

---

* These values are given by a graphical method according to figure 11 of present report (see page 45).

sulphur electrode, E_{sse} (which would operate reversibly under p_{S_2} = 1 atm), and the decimal logarithms of the partial pressure of gaseous sulphur ($\log p_{S_2}$). We have thus arbitrarily chosen (S_2) as the reference gaseous species for the sulphur-iron system, and we shall write all reactions to which sulphur participates, whatever its form, in such a way that one mole of gaseous (S_2) intervenes among the reactants.

Table II (page 25) gives a list of 20 reactions and formulae which will be used for calculating the equilibrium conditions, and which refer successively to the one component system sulphur (with the mark ◇), to the one component system iron (with the mark ⬭) and to the two components system sulphur-iron (with the mark ◯).

3.3. Equilibrium conditions of the considered reactions (tables III and IV)

The equilibrium conditions of all reactions to which gaseous (S_2) participates are calculated by the following formulae:

$$\Delta G_r^\circ(\text{cal.}) = \Sigma\nu\mu^\circ = RT \ln p_{S_2}$$

$$E_{sse}(\text{mv}) = \Delta G_r^\circ/92.242$$

$$\log p_{S_2}(\text{atm}) = \Delta G_r^\circ/4.5756/T$$

From tables I and II, we have calculated the values of ΔG_r° of the considered reactions relating to S-Fe system, the values of E_{sse}, and the corresponding logarithms of the equilibrium partial pressures of (S_2). These values are given in table III (pages 26 to 29).

According to table III, one obtains table IV (pages 31 to 35) which gives approximate formulae for the free enthalpies of reaction ΔG_r° (calories per mole (S_2)) of the considered reactions, for different temperature-ranges as well as the corresponding formulae for the values of the electrode potential E_{sse} and of the logarithms of the partial pressures of (S_2).

for instance:

for reaction (1) : $2Fe + (S_2) = 2\,FeS$

$$\Delta G_r^\circ = 2\,\mu^\circ_{FeS} - 2\,\mu^\circ_{Fe} - \mu^\circ_{(S_2)}$$

$$RT \ln p^\circ_{S_2} = \Delta G_r^\circ \quad \text{and} \quad E^\circ_{sse} = \Delta G_r^\circ/92.242$$

$$\log p_{S_2} = \Delta G_r^\circ/4.5756/T$$

At 500°K and 1000°K, the values of ΔG_r° and $\log p_{S_2}$ are:

500°K $\Delta G_r^\circ = 2 \times(-24498) - 2 \times 0 - 11702 = -60698$(cal.)

$$E_{sse}^\circ = \frac{-60698}{92.242} = -658(\text{mv})$$

$$\log p_{S_2}^\circ = \frac{-60698}{4.5756 \times 500} = -26.5312 \text{ (atm)}$$

1000°K $\Delta G_r^\circ = 2 \times(-23362) - 2 \times 0 - 0 = -46724$(cal)

$$E_{sse}^\circ = \frac{-46724}{92.242} = -506(\text{mv})$$

$$\log p_{S_2}^\circ = \frac{-46724}{4.5756 \times 1000} = -10.2116(\text{atm})$$

If ΔG_r° is proximately linear with T at given temperature range, one obtains a relationship as follows:

$$\Delta G_r^\circ(T) = \frac{\Delta G_r^\circ(T_2) - \Delta G_r^\circ(T_1)}{T_2 - T_1}(T-T_1) + \Delta G_r^\circ(T_1)$$

or reaction (1), from 500° to 1000°K, the approximate formulae are

$$\Delta G_r^\circ = \frac{-46724+60698}{1000-500}(T-500) - 60698$$

$$= -74672 + 27.948\ T$$

$$E_{sse}^\circ = \frac{-74672+29.948\ T}{92.242} = -809.5 + 0.303\ T$$

and $\log p_{S_2}^\circ = \dfrac{-74672 + 27.948\ T}{4.5756\ T} = -16319.6/T + 6.108$

4. EQUILIBRIUM DIAGRAM AND THEIR INTERPRETATION

4.1. The setting-up of the equilibrium diagrams

4.1.1. Figure 1. Vapor pressure and decomposition pressure of FeS(troilite)

In figure 1, we have drawn lines which relate to the influence of temperature on the volatilization of condensed FeS, and based on thermo-

dynamical data given in the JANAF tables[3].

These lines relate respectively to the two following reactions:

line 7 Volatilization of FeS with formation of gaseous (FeS) according to reaction FeS = (FeS) 7

These values of vapor p_{FeS} may be represented fairly well by the following approximate formulae:

1000 - 1463°K	$\log p_{FeS} = -23\,471/T + 8.075$
1463 - 2000°K	$-21\,041/T + 6.415$
2000 - 3500°K	$-19\,972/T + 5.880$

(see table IV page 33).

line 1' Decomposition of FeS with formation of gaseous (Fe), (S_1), (S_2) and condensed Fe (solid below 1809°K, and liquid above 1809°K) according to reactions:

$$2\ FeS = 2\ (Fe) + (S_2) \qquad 8$$
$$2\ FeS = 2\ Fe + (S_2) \qquad 1$$
$$(S_2) = 2\ (S_1) \qquad 10$$

These values of the decomposition pressure $P = p_{Fe} + p_{S_2} + p_{S_1}$ (which correspond to the equilibria between condensed FeS and condensed Fe) may be represented fairly well by the following approximate formulae:

1000 - 2000°K	$\log p = -15\,390/T + 5.179$
2000 - 3500°K	$= -16\,121/T + 5.545$

Theses two equilibrium conditions will be discused in section 4.3 of the present report (pega 14).

From figure 1 one sees that the volatilization of ferrous sulphide which occurs by heating does not result of the formation of gaseous (FeS), but its decomposition with formation of gaseous (Fe), (S_2), and (S_1). Gaseous (FeS) does not exist in appreciable amount.

4.1.2. Figures 2 and 3. Equilibrium diagram log p_{S_2}=f(1/T) for the system S-Fe with consideration of the pyrrhotite of formula $FeS_{1.140}$

Figure 2 shows the equilibrium diagram for system S-Fe drawn by using the formulae given in table IV (pages 31 to 35). Figure 3 is an enlargement of part of figure 2.

4.1.3. Figures 6 to 7 and 9 to 11. Equilibrium diagram log p_{S_2}=f(1/T) and E_{sse}= f(T) for the system S-Fe with consideration of pyrrhotite of different formulae

a) Equilibrium diagram based on the data given in the JANAF tables

It is likely that any solid substance which has a non stoichiometric chemical formula , such as pyrrhotite $FeS_{1.140}$ (which is sometimes written Fe_7S_8) is in fact part of a series of solid solutions, and that, thus, the solubility conditions should be considered as a whole. It would be a mistake to consider only equilibria involving one form of the series (for instance the equilibria $FeS_2/FeS_{1.140}$ and $FeS_{1.140}/FeS$, or $FeS_{1.140}/Fe$) without considering the equilibria involving the other forms of the series (for instance FeS_2/FeS_{1+x},with different values of the non stoichiometric index 1+X, and FeS_{1+x}/Fe).

As previously show in a study related to system O-Fe (1.4 pp.7-14), it is true notably for the wüstite $Fe_{0.947}O$, which is in fact part of series of non stoichiometric ferrous oxide $Fe_{1-x}O$, where the index 1-X extends from 0.95 to 0.84. This is also true for the non stoichiometric magnetite where this index extends from 0.750 to 0.726. In the diagrams which are prepared in the present work, the stability conditions of such non stoichiometric substance do not appear as a single line (relating to an univariant equilibrium), but as a surface (relating to a divariant equilibrium) which includes several lines corresponding to different stoichoimetries. Examples of this have been given in reference (1.4) (figures 14 and 15, page 17C).

b). Equilibrium diagram taking into account the work of T.ROSENQVIST (5) (figures 4 to 7)

It is well known that pyrrhotite FeS_{1+X} (which is called in German "Magnetkies") is in fact a solid solution of sulphur in ferrous sulphide FeS (4, p.345) with different stoichiometries. An outstanding experimental work on the thermodynamic behavior of iron sulphides has been published in 1954 by T.ROSENQVIST (5), this work has led to figure 4a which relates to the behavior of iron and iron sulphides in the presence of $(H_2S)/(H_2)$ mixtures, in the temperature range from about 500 to 1500°C. In this figure 4a the indexes 42,39,····· till 0.01,0.005, indicate the concentrations in sulphur, in weight %.

Figure 4b shows the same diagram as figure 4a with a reverse scale for the abscissa (high temperature to the right), as is used for the diagrams drawn in our Atlases. In this figure 4b, we have converted the concentrations in sulphur (weight %) into the corresponding values of the stoichiometric index 1+X (relating to the formula FeS_{1+X}). This correspondance is given in the following table

S weight %	42	39	38	37	34	32	30	20	4	2	1	0.1	0.05	0.03	0.01	0.005
S mole per loop	1.313	1.219	1.188	1.156	1.062	1.000	0.938	0.625	0.125	0.063	0.031	0.0030	0.0015	0.0009	0.0003	0.00016
Fe mole per loop	1.038	1.092	1.110	1.128	1.182	1.218	1.253	1.432	1.719	1.755	1.773	1.7887	1.7896	1.7900	1.7903	1.7904
1+X	1.264	1.116	1.070	1.025	0.898	0.821	0.748	0.436	0.073	0.036	0.017	0.0016	0.0008	0.0005	0.0002	0.0001
$\log(X\ 10^3)$	2.42	2.06	1.84	1.40	-	-	-	-	-	-	-	-	-	-	-	-
log(1+X)	0.101	0.048	0.029	0.011	-0.047	-0.086	-0.126	-0.316	-1.137	-1.444	-1.770	-2.796	-3.097	-3.301	-3.699	-4.000

In this figure 4b, where we have added the isobar lines for log p_{S_2}, and where the two parts of figure 4a have been drawn with a single ordinate scale (without interruption between 10^0 and 10^{-1}), we have

also indicated with thicker lettering the areas of stability of the condensed substances **FeS_2**, **FeS_{1+X}**, **$\alpha, \beta, \delta Fe$**. It may be seen that there is no area of stability for solid **FeS** (troilite). **FeS** is stable only along a given line. This means that any increase of the sulphur (or H_2S) content of the gaseous atmosphere leads to a sulphidation of troilite with formation of pyrrhotite, and that any decrease of this sulphur (or H_2S) content leads to a desulphidation of troilite with formation of iron (containing a slight amount of dissolved sulphur).

Figure 5 shows a still unpublished equilibrium diagram for the system S-H, which was drawn in 1940[6]. In this diagram, which is drawn as a function of log p_{S_2} and 1/T, the family of lines a represents the equilibrium conditions of reaction $2(H_2) + (S_2) = 2(H_2S)$ according to the following formulae,valid for the temperature ranges of 500 to 1000°K and 1000 to 2000°K,

$$500 - 1000°K \quad \log p_{S_2} = -9250.4/T + 4.9489 + 2\log(p_{H_2S}/p_{H_2})$$

$$1000 - 2000°K \quad = -9440.7/T + 5.1482 + 2\log(p_{H_2S}/p_{H_2})$$

These formulae allow to draw in figure 4b isobar lines for log p_{S_2}; they also allow to convert the values of $\log(p_{H_2S}/p_{H_2})$ given in this figure 4b into log p_{S_2}, and thus to draw figures 6 and 7 which represent, as a function of log p_{S_2} and 1/T, the equilibrium diagram shown on figure 4b as a function of log (p_{H_2S}/p_{H_2}) and 1/T. It is likely that, due to some imperfections relating to the stability of pyrrhotite **FeS_{1+X}** (for which the lines relating to given values of (1+X) are somewhat abnormal), notably below its transformation temperature (598°K),figures 6 and 7 are not fully reliable and should be considered as provisional and subject to amendments.

c). Equilibrium diagram taking into account the work of P.TOULMIN and P.B.Jr.BARTON (7)

In 1964 using the electrum tarnish method which was developed by themselves,P.TOULMIN and P.B.Jr.BARTON determined the variation in the composition of hexagonal pyrrhotite in the condensed system as a function of sulphur fugacity and temperature. They also, according

to their experimental results, derived the following formula for the calculation of log f_{S_2} under given temperatures and mol fractions of FeS in pyrrhotite (in the system $FeS-S_2$)

$$\log f_{S_2} = (70.03 - 85.83N)(1000/T - 1) + 39.03\sqrt{1-0.9981N} - 11.91 \quad \cdots\cdots (A)$$

where f_{S_2} is the fugacity of sulphur relative to the ideal diatomic gas at 1 atm. Their results are shown in figure 8.

Figures 9 and 10 are two revised diagrams which were drawn by making use of the work of TOULMIN and BARTON. The mol fraction of FeS, N_{FeS}, has been converted into the corresponding non stoichiometric index (1+X) according to following formula:

$$N_{FeS} = \frac{2}{1 + (1 + X)}$$

If the pressure is not very high, p_{S_2} may be considered to be equal to the fugacity f_{S_2}. Thus, the following proximate formula was obtained by virtue of equation (A):

$$\log p_{S_2} = \left(70.03 - \frac{171.66}{1+(1+X)}\right)(1000/T-1) + 39.30\sqrt{1 - \frac{1.9962}{1+(1+X)}} - 11.91 \quad \cdots\cdots\cdots (B)$$

Then, the formula for E_{sse} was obtained:

$$E_{sse}(mv) = \left(3.476 - \frac{8.515}{1+(1+X)}\right)(1000-T) + 1.949\sqrt{1 - \frac{1.9962}{1+(1+X)}}\cdot T - 0.5908T \quad \cdots\cdots\cdots (C)$$

By means of this formula (C) and of the formula in table IV, an equilibrium diagram $E_{sse} = f(T)$ was drawn in figure 11.

In figures 9, 10 and 11, above about 1000°K, the curves relating to non stoichiometric pyrrhotite with different indexes (1+X) were estimated according the phase diagram given in figure 12, from which one can determine the indexes 1+X corresponding to different temperatures. The dotted lines drawn in the area of stability of solid pyrrhotite have been drawn by extrapolation so

that they cross the melting curve CDE at the temperature given in the phase diagram published by J.CHIPMAN (fig.12). The isostoichiometric-lines given in figures 9, 10 and 11 in the area of stability of liquid ferrous sulphide have also been drawn according to figure 12.

In figure 10, the isobar lines for total pressure of (p_{Fe} + p_{S_1} + p_{S_2}) were calculated with computer, the values are listed as follows.

$\log(p_{Fe}+p_{S_1}+p_{S_2})$	$\log p_{S_2}$	T°K	1000/T
	-7	1596	0.6265
-6	-6.3010	1561	0.6401
	-6.0458	1474	0.6786
	-6	1729	0.5785
-5	-5.301	1687	0.5926
	-5.0458	1584	0.6312
	-5	1886	0.5301
-4	-4.3010	1834	0.5452
	-4.0458	1713	0.5839
	-4	2086	0.4794
-3	-3.3010	2020	0.4949
	-3.0458	1864	0.5366
	-3	2332	0.4288
-2	-2.3010	2248	0.4448
	-2.0458	2051	0.4876
	-2	2644	0.3783
-1	-1.3010	2532	0.3949
	-1.0458	2278	0.4390
	-1	3051	0.3278
0	-0.3010	2897	0.3451
	-0.0458	2559	0.3908
	0	3605	0.2774
+1	0.6990	3383	0.2956
	0.9542	2915	0.3430
	1	4404	0.2271
+2	1.6990	4060	0.2463
	1.9542	3382	0.2956

These isobar lines take on a curve, after being identical with line ⟨11⟩ as long as (S_2) predominates, they follow the lines for iron when (Fe) become largely predominent, Along any isobar curve, the total pressure of $(p_{Fe} + p_{S_1} + p_{S_2})$ is always a constant.

4.2. Metallic iron

As shown notably by figures 6,7 and 9 to 11, solid metallic iron, which is stable bellow line (1), changes from the α to the γ form at 1184°K, to the δ form at 1665°K, and becomes liquid at 1809°K. The vapor pressure of metallic iron at different temperature are listed as follows.*

log p_{Fe}	-6	-5	-4	-3	-2	-1	0	+1	+2
T°K	1604	1738	1897	2102	2354	2674	3136	3674	4518
1000/T	.6234	.5753	.5272	.4757	.4248	.3739	.3189	.2722	.2213

Above line (1), solid α and γ Fe may be, up to about 1261°K (988°C), sulphidized into pyrrhotite FeS_{1+X}. Above 1261°K, the sulphidation of α or δ Fe leads to the formation of a liquid melt which contains less sulphur than the pyrrhotite(which has always more than 36.4% S). The formula of this melt is about $FeS_{0.8}$ (30% S) at 1261°K (988°C) and $FeS_{0.44}$ (20%S) at 1573°K(1300°C). Above about 1500°K, the sulphur content of the melt becomes much smaller, $FeS_{0.07}$ (4% S) at 1670°K and $FeS_{0.04}$ (2% S) at 1740°K. Above 1740°K(1467°C), the melt is essentially liquid iron containing some sulphur in an amount which depends on the partial sulphur pressure of the gaseous atmosphere, $FeS_{0.04}$ (2% S) for log p_{S_2} = -5.0 (atm), and $FeS_{0.02}$ (1% S) for log p_{S_2} = -5.5(atm).

---

* These values are slightly different from the values given in a previous report (1.3,p.3), because the newer μ°_{Fe} and $\mu^{\circ}_{(Fe)}$ were used at present work.

Solid iron may dissove much less sulphur than the liquid melt, its higher sulphur content corresponds to $FeS_{0.0002}$ (0.01% S) at 1261°K (at log p_{S_2} = -7.0) and to $FeS_{0.0005}$ (0.03% S) at 1400°K (at log p_{S_2} = -5.5).

4.3. The stoichiometric ferrous oxide FeS (troilite)

It appears from figures 6 and 9 that troilite is stable only along line ① (up to 1261°K), and does not have any area of thermodynamic stability. Above line ① , troilite is sulphurized with formation of non stoichoimetric pyrrhotite FeS_{1+X}, the sulphur content of which increases with the sulphur pressure of gaseous atmosphere, at 1261°K(988°C) from slightly more than FeS(36,5% S), at log p_{S_2} = -7.0(atm), up to slightly more than $FeS_{1.27}$ (42.1% S) at log p_{S_2} = +1.8(atm). Below line ① , troilite is desulphurized with formation of metallic iron Fe containing a slight amount of sulphur, at 1261°K, $FeS_{0.0002}$ (0.01% S), at log p_{S_2} = -7.0(atm).

According to figures 6 and 9, stoichiometric FeS might be formed by cooling molten ferrous sulphide FeS_{1+X} below 1261°K under a very low sulphur pressure (10^{-7} atm), or by desulphurization of pyrrhotite FeS_{1+X} under similar conditions. And this might explain the well known fact, which we have leared from Ivan de MAGNÉE[8], that troilite, which does not form lonely on the earth as a distinct mineral, is common in meteorites and lunar rocks[9,10]*. When coming in presence of the cold interstellar vacuum, molten iron sulphides may be altogether desulphurized and quenched with formation of stoichiometric FeS.

Furthermore, figures 7 and 10 show that, when heated at different temperatures, molten ferrous sulphide FeS_{1+X} will decompose till the system reaches about line ①' ,which relates to its decomposition with formation of metallic iron and gaseous (S_2), (S_1) and (Fe), according to the following reactions (which relate

* troilite is always associated with pyrrhotite

to the decomposition of stoichiometric **FeS**):

$$2FeS = 2Fe + (S_2) \quad (1)$$

$$2FeS = 2(Fe) + (S_2) \quad (8)$$

and

$$(S_2) = 2(S_1) \quad (10)$$

As show at page 7 and in figure 1, the equilibrium conditions of this high temperature decomposition of molten ferrous sulphide may be expressed approximately by the following relations where $P = p_{S_2} + p_{S_1} + p_{Fe}$

1000 - 2000°K $\log P = -15\ 390/T + 5.179$

2000 - 3500°K $= -16\ 121/T + 5.545$

These formulae lead to the following approximate values for the influence of temperature on the decomposition pressure of molten ferrous sulphide

log P(atm)	-6	-5	-4	-3	-2	-1	0	+1	+2
T°K	1377	1512	1677	1882	2137	2463	2907	3547	4548
1000/T	.7264	.6614	.5964	.5315	.4680	.4060	.3439	.2819	.2199

4.4. The non stoichiometric ferrous oxide FeS_{1+x} (pyrrhotite)

The mineral pyrrhotite is often considered as Fe_7S_8 (or $Fe_{0.877}S$ or $FeS_{1.140}$), but may, as show by T.ROSENQVIST[5], have different compositions ranging from less than 37% S till more than 42% S. This corresponds, as shown by figures 6,7 and 9 to 11 of the present paper, to a series of solid solutions ranging from less than $FeS_{1.025}$ to more than $FeS_{1.264}$. In fact, pyrrhotite is , as said in page 8 a solid solution of sulphur in **FeS**.

According to figures 6,7,9 to 11, any decrease of the sulphur pressure below line (1) (which corresponds to the equilibrium between stoichiometric **FeS** (troilite) and metallic iron) will lead to a desulphurizations of pyrrhotite with formation of iron. On the right

side of line CDE (i.e. when heated above about 1210 to 1463°K depending on the sulphur pressure), pyrrhotite will melt with formation of liquid FeS_{1+X} whose stoichiometry will depends on this sulphur pressure . For example (see figure 10, page 42), at about 1450°K the substances which are in equilibrium with each other are solid $FeS_{1.06}$ and liquid $FeS_{1.00}$. At other temperatures , the compositions will be different. At about 1463°K (point D) both liquid and solid have the same composition $FeS_{1.07}$. Above point D the index values for the liquid are higher than for the solid. On the contrary , below point D, the 1+X values for the liquid are smaller than for the solid. At higher temperatures , the equilibrium pressures of (S_2) , (S_I) and (Fe) of ilquid pyrrhotite increase, and pyrrhotite may thus decompose with formation of these three gases . The exact values of $\log p_{s_2}$ and $\log p_{s_1}$ are given by the isobars ⟨11⟩ and ⟨10⟩. But the exact isobars for $\log p_{Fe}$ have not been drawn , due to the lack of reliable information relating to the composition of liquid FeS_{1+X}. Tentatively , we have drawn on figure 10, the family of straight plain lines (8) which would correspond to given equilibrium values of $\log p_{Fe}$ in the hypothetical presence of stoichiometric FeS; we have also drawn a family of slightly in curved dotted lines which would probably correspond better to the equilibrium values of $\log p_{Fe}$ in the real presence of non-stoichiometric FeS_{1+X} , such provisional isobar lines might perhaps be improved in the future.

It seems that the chemical behavior of pyrrhotite is very complicate and still largerly unknown ; we shall content ourselves to mention that , as shown by figures 2,6 and 9 to 11 , there are two forms of hexagonal pyrrhotite (low temperature β and high temperature γ) whose equilibrium temperature is 598°K (325°C). Above line (5), pyrrhotite may be transformed into pyrite FeS_2.

4.5. Ferric sulphide FeS_2 (pyrite)

Two polymorphs of FeS_2 are known; pyrite and marcasite. The latter is known to be metastable with respect to the pyrite at all temperatures. For this reason we did not consider marcasite in the present work.

Figure 9 shows that FeS_2 is stable above line (5). Line ⟨2⟩ ,which shows the conditions of the stability of condensed sulphur, is a limitation for the equilibrium diagrams of all sulphur containing systems. Beyond line ⟨2⟩ , all the sulphur existing in the gas phase may be converted into solid or liquid elementary sulphur. No stable equilibrium can be located at any point which is above line ⟨2⟩.

If heated at different sulphur pressures, pyrite FeS_2 will decompose into solid or liquid pyrrhotite FeS_{1+X}. The decomposition temperatures at several given sulphur pressures are listed in table V.

	formation of solid FeS_{1+X}		formation of liquid FeS_{1+X}	
log p_{S_2}	T°K	T°C	T°K	T°C
-6	730	457	1315	1042
-5	760	487	1360	1087
-4	790	517	1400	1127
-3	830	557	1430	1157
-2	875	602	1449	1176
-1	925	652	1464	1191
0	975	702	1460	1187
+1			1410	1137

Table V. Temperatures of dissociation of pyrite FeS_2 with formation of different iron sulphides, under different pressures in gaseous sulphur.

4.6. Equilibrium diagram for the S-Fe system of the S% = f(T) type

Figures 12a and 12b give, for memory, the very well known sulphur-iron diagrams drawn after John CHIPMAN[11] and L.A.TAYLOR[12].

Figure 13 is a modified presentation of figure 12a. Isobar lines were added. Also included in this diagram are all the triple points (A to C and E to H) and the maximum melting temperature of high temperature hexagonal pyrrhotite (γ FeS_{1+X})(point D). All these points were already plotted in the equilibrium diagrams given at figures 6,7 and 9 to 11. At the top of figure 13, a non-linear scale of the values of 1+X is given.

Comparing figure 13 with figures 6,7 and 9 to 11, it is noticed that the "empty spaces" existing at figure 13 between the solidus and the liquidus lines, or between the different solidus lines, do not exist in figures 6,7 and 9 to 11. These "empty spaces" do not correspond to any "real" state. In figure 13, only pyrrhotite (FeS_{1+X}) has an area of stability which has been shown by the shaded

area. In this figure 13, the points B_1,B_2 and B_3 correspond in fact to one and the same equilibrium solid FeS_2/liquid S/solid γ FeS_{1+X}, which is indicated by one point B in diagrams of log p_{S_2} = f(1/T) or E_{sse}= f(T) type: Point C_1,C_2 and C_3 of figure 13 correspond to one and the same equilibrium liquid S or gaseous sulphur/liquid FeS_{l+X}/ solid γ FeS_{1+X} shown by the point C, in figures 6,7 and 9 to 11. There is some disagreement in the temperatures given for points C in figure 13 (1356°K) and in figure 11 (about 1210°K). Using the same method, one sees that, points E_1,E_2,E_3 of figure 13 stand for the equilibrium solid γ Fe/ liquid FeS_{l+X}/ solid γ FeS_{1+X} and correspond to point E of figure 11; points F_1 and F_2 of figure 13 are shown as one point F in figure 11 and is the triple point for the equilibrium solid αFe/ solid γFe/ solid γFeS. In all these figures, line AG separates the stable areas of β FeS_{1+X}(low temperature hexagonal pyrrhotite) and γ FeS_{1+X} (high temperature hexagonal pyrrhotite) and points G and A are two triple points for the equilibria solid γ FeS/ solid β FeS/ solid α Fe and solid α FeS_{1+X}/ solid β FeS_{1+X} / solid FeS_2 (pyrite) respectively.

Due to the complication of the S-Fe system and to lack of information , we could not show the equilibrium conditions at low temperatures (below about 500°K), and we have put some questionmarks on this area. This diagram might be revised as a result of further work.

ACKNOWLEDGEMENTS

This work was performed under sponsorship of Detachment 1, Air Force, under Grant AFOSR-84-0141.

We express our thanks to professor I de MAGNÉE and professor J. DROWART who kindly give us very helpful information.

The authors wish also to thank Antoine POURBAIX and Renée SCHERER, for their kind support and all help.

BIBLIOGRAPHY

1. Chemical and Electrochemical Equilibria in the Presence of a Gaseous Phase.

1.1 OXYGEN, by Marcel POURBAIX, CEBELCOR Rapports Techniques, 137, RT. 250(1979)

1.2 HYDROGEN, by Marcel POURBAIX, ibid, 137, RT 251(1979)

1.3 IRON, by Marcel POURBAIX, ibid, 137, RT 252 (1979)

1.4 OXYGEN-IRON, by Marcel POURBAIX, ibid, 137, RT 253(1979)

1.5 OXYGEN-HYDROGEN, by Marcel POURBAIX and YANG Xizhen, ibid, 140, RT 260(1981)

1.6 OXYGEN-HYDROGEN-IRON, by Marcel POURBAIX and YANG Xizhen, ibid, 138, RT 256 (1980)

1.7 CARBON, by Marcel POURBAIX, YANG Xizhen and ZHANG Heming ibid, 144, RT 265 (1983)

1.8 OXYGEN-CARBON, by Marcel POURBAIX, YANG Xizhen and ZHANG Heming, ibid, 144, RT 266(1983)

1.9 OXYGEN-CARBON-IRON, by Marcel POURBAIX, ibid, 181, RT270 (1984)

1.10 SULPHUR, by YANG Xizhen, ZHANG Heming, ZHANG Zhongcheng and Marcel POURBAIX, ibid, 149, RT 281(1984)

1.11 OXYGEN-SULPHUR, by ZHANG Heming, ZHANG Zhongcheng, YANG Xizhen and Marcel POURBAIX, ibid, 149, RT 282(1984)

2. Diagrams of Chemical and Electrochemical Equilibria Their Setting-up and Applications, Proc. NATO Advanced Research Workshop, Brussels, Sept. 2-5, 1981 Ed. M. POURBAIX and A. POURBAIX, Rapports Techniques CEBELCOR 142, RT 263(1982)

3. M.W.CHASE, Jr., J.L.CURNUTT, J.R.DOWNEY, Jr., R.A.MCDONALD, A.N. SYVERUD and E.A.VALENZUELA, JANAF Thermodynamical Tables, supplement, Vol.11, No.3(1982)
NSRDS-American Chemical Society and the American Institute of Physics for the National Bureau of Standards

4. R.J.MEYER, Gmelins Handbuch der anorganishen chemie, XIX, 59B, EISEN, 345, Verlag Chemie (1932)

5. T.ROSENQVIST, A Thermodynamic Study of the Iron, Cobalt, and Nickel Sulphides, J. iron and steel inst., 176, 37-52(1954)

P. 22 - blank

6. M.POURBAIX, Equilibres chimiques de systèmes complexes comportant une phase gazeuse. Méthode de calcul et représentation graphique, Internal report p.391(thesis Brussels),unpublished
7. P.TOULMIN and P.B.Jr.BARTON, Geochim. Cosmochim. Acta, 28, 641-671(1964)
8. I de MAGNÉE , personal communication (August 1984)
9. Judith W.FRONDEL, Lunar Mineralogy, Chapter 2 (Sulphides, Phosphide, and Carbides), pp. 41-46, Publ. John Wiley and sons (1975)
10. Paul RAMDOHR, The Ore Minerals and Their Intergrowths, 2nd. Edition, p592, (1980)
11. Metals Handbook 8th Edition, Metallography, Structures and Phase Diagrams ASM, 8, 305(1973)
12. L.A.TAYLOR, Am. Mineral 55,1650(1970)

—

INDEX OF TABLES

		pages
TABLE I	Standard chemical potentials μ° (or standard free enthalpies of formation ΔG_f°) of the considered substances (calories·mole^{-1}).	24
TABLE II	Equilibria, reactions and formulae for the calculation of the equilibrium conditions.	25
TABLE III	Standard equilibrium conditions of the considered reactions.	[redacted]
	-Standard free enthalpies of reactions ΔG_f° (calories per molar group)	[redacted] 27
	-Standard equilibrium electrode potentials E_{sse}° (mv) (for reactions involving gaseous (S_2))	[redacted] 28
	- Logarithms of the standard sulphur pressure log p_{S_2} (atm)(for reactions involving gaseous (S_2)),and logarithms of the equilibrium gaseous pressure log p (atm) (for reactions not involving gaseous (S_2)). ...	[redacted] 29
TABLE IV	Influence of temperature on the equilibrium conditions of the considered reactions. Approximate formulae	31
TABLE V	The temperatures of dissociation of pyrite FeS_2 with formation of different iron sulphides, under different pressure in gaseous sulphur.	18

	CONDENSED SUBSTANCES						GASEOUS SUBSTANCES			
	A	B	C	D_1	D_2	E	F	G	H	I
T°K	S	FE	FES	FE0.877S	FES1.140	FES2	(S1)	(S2)	(FE)	(FES)
0	0	0	-24421	-25412	-28976	-40121	65663	30636	98740	88401
100	0	0	-24371	-25405	-28968	-39848	62885	26980	95588	84083
200	0	0	-24356	-25450	-29019	-39120	59706	22923	91978	79331
298	0	0	-24368	-25541	-29123	-38256	56533	19027	88393	74723
300	α 0	0	-24368	-25543	-29125	-38239	56473	18955	88325	74637
400	liq. 0	0	α -24400	-25659	-29258	-37246	53251	15131	84668	70036
500	0	0	β -24498	-25667	-29267	-35900	50189	11702	81021	65657
			β	β	β					
600	0	0	γ -24630	γ -25664	γ -29263	-34387	47205	8479	77396	61412
700	0	0	-24780	-25677	-29278	-32769	44268	5387	73804	57270
800	-1198	0	-26103	-26863	-30631	-33466	40171	0	70248	52023
900	258	0	-24737	-25359	-28916	-28782	38757	0	66736	49524
1000	1678	0	-23362	-23846	-27910	-24101	37334	0	63279	47083
1100	3067	α 0	-21950	-22295	-25422	-19392	35904	0	59898	44728
1200	4428	γ 0	-20523	-20733	-23641	-14680	34469	0	56578	42434
1300	5763	0	-19096	-19172	-21861	-9977	33028	0	53303	40189
1400	7076	0	γ -17693	-17635	-20108	-5302	31585	0	50092	37972
1500	8368	0	liq. -16308	-16128	-18390		30137	0	46823	35781
1600		γ 0	-15662	-14655	-16710		28687	0	43617	33617
1700		δ 0	-14820	-13218	-15072		27234	0	40438	31485
1800		δ 0	-13971	-11816	-13473		25779	0	37293	29393
1900		liq. 0	-12938				24323	0	34341	27517
2000		0	-11888				22865	0	31435	25688
2500		0	-6395				15554	0	17284	16990
3000		0	-1230				8217	0	3647	8936
3500		9993	13934				856	0	0	10773
4000							-6527	0	0	16664
4500							-13931	0	0	22714
5000							-21354	0	0	28925
5500							-28791	0	0	35294
6000							-36239	0	0	41820
368	0							16304		
388	0							15545		
718	-2426							0		
1314	6136							0		

TABLE I Standard chemical potentials μ° (or standard enthalpies of formation ΔG_f°) of the considered substances (calories.mole^{-1}).

(see page 4)

Equilibria	Reactions	ΔG°_r (calories per molar group)	Equilibrium Formulae
SULPHUR SYSTEM			
Reaction involving one condensed substance			
(2) S	$(S_2) = 2\ S$	$= 2\ \mu^\circ_S - \mu^\circ_{(S_2)}$	$RT \ln p_{S_2} = \Delta G^\circ_r$
Reactions involving one gaseous substance			
(10) (S_1)	$(S_2) = 2\ (S_1)$	$= 2\ \mu^\circ_{(S_1)} - \mu^\circ_{(S_2)}$	$RT \ln p_{S_2} = \Delta G^\circ_r + 9.1512\ T \log p_{S_1}$
(11) (S_2)	$(S_2) = (S_2)$	$= 0$	$RT \ln p_{S_2} = 4.5756\ T \log p_{S_2}$
(12) $(S_1)/(S_2)$	$2\ (S_1) + (S_2) = 2\ (S_2)$	$= \mu_{(S_2)} - \mu_{(S_1)}$	$RT \ln p_{S_2} = \Delta G^\circ_r + 9.1512\ T \log(p_{S_2}/p_{S_1})$
IRON SYSTEM			
Reaction involving one condensed substance			
(8) Fe/(Fe)	$Fe = (Fe)$	$= \mu^\circ_{(Fe)} - \mu^\circ_{Fe}$	$\log p_{Fe} = \Delta G^\circ_r / 4.5756\ T$
SULPHUR-IRON SYSTEM			
Reactions involving two condensed substances			
(1) Fe/FeS	$2\ Fe + (S_2) = 2\ FeS$	$= 2\ \mu^\circ_{FeS} - \mu^\circ_{(S_2)} - 2\ \mu^\circ_{Fe}$	$RT \ln p_{S_2} = \Delta G^\circ_r$
(2) $Fe/FeS_{1.140}$	$1.754Fe + (S_2) = 1.754FeS_{1.140}$	$= 1.754\mu^\circ_{FeS_{1.140}} - \mu^\circ_{(S_2)} - 1.754\mu^\circ_{Fe}$	$RT \ln p_{S_2} = \Delta G^\circ_r$
(3) $FeS/FeS_{1.140}$	$14.285FeS + (S_2) = 14.285FeS_{1.140}$	$= 14.285\mu^\circ_{FeS} - \mu^\circ_{(S_2)} - 14.285\mu^\circ_{FeS_{1.140}}$	$RT \ln p_{S_2} = \Delta G^\circ_r$
(4) $FeS_{1.140}/FeS_2$	$2.326FeS_{1.140} + (S_2) = 2.326FeS_2$	$= 2.326\mu^\circ_{FeS_2} - \mu^\circ_{(S_2)} - 2.326\mu^\circ_{FeS_2}$	$RT \ln p_{S_2} = \Delta G^\circ_r$
(5) FeS_{1+x}/FeS_2	$\frac{2}{1-x} FeS_{1+x} + (S_2) = \frac{2}{1-x} FeS_2$		
Reactions involving 1 condensed substance and 1 gaseous substance			
(6) Fe /(FeS)	$2\ Fe + (S_2) = 2\ (FeS)$	$= 2\ \mu^\circ_{(FeS)} - \mu^\circ_{(S_2)} - 2\ \mu^\circ_{Fe}$	$RT \ln p_{S_2} = \Delta G^\circ_r + 9.1512\ T \log p_{FeS}$
(7) FeS /(FeS)	$FeS = (FeS)$	$= \mu^\circ_{(FeS)} - \mu^\circ_{FeS}$	$\log p_{FeS} = \Delta G^\circ_r / 4.5756\ T$
(8) (Fe)/ FeS	$2\ (Fe) + (S_2) = 2\ FeS$	$= 2\ \mu^\circ_{FeS} - \mu^\circ_{(S_2)} - 2\ \mu^\circ_{(Fe)}$	$RT \ln p_{S_2} = \Delta G^\circ_r - 9.1512\ T \log p_{Fe}$
(9) $(Fe)/FeS_{1.140}$	$1.754(Fe) + (S_2) = 1.754FeS_{1.140}$	$= 1.754\mu^\circ_{FeS} - \mu^\circ_{(S_2)} - 1.754\mu^\circ_{(Fe)}$	$RT \ln p_{S_2} = \Delta G^\circ_r - 8.0256\ T \log p_{Fe}$
Reaction involving 2 gaseous substances			
(10) (Fe)/(FeS)	$2\ (Fe) + (S_2) = 2\ (FeS)$	$= 2\ \mu^\circ_{(FeS)} - \mu^\circ_{(S_2)} - 2\ \mu^\circ_{(Fe)}$	$RT \ln p_{S_2} = \Delta G^\circ_r + 9.1512\ T \log(p_{FeS}/p_{Fe})$
Reaction involving 1 condensed substance and 2 gaseous substances			
(11) $(Fe)/(S_2)$,Fe	$(Fe) + (S_2) = Fe + (S_2)$	$= \mu^\circ_{Fe} - \mu^\circ_{(Fe)}$	$RT \ln p_{S_2} = \Delta G^\circ_r + 4.5756\ T \log(p_{S_2}/p_{Fe})$
(12) $(Fe)/(S_1)$,Fe	$2\ (Fe) + (S_2) = 2\ Fe + 2(S_1)$	$= 2\ \mu^\circ_{Fe} + 2\mu^\circ_{(S_1)} - 2\ \mu_{(Fe)} - \mu_{(S_2)}$	$RT \ln p_{S_2} = \Delta G^\circ_r + 9.1512\ T \log(p_{S_1}/p_{Fe})$
(13) $(Fe)/(S_2)$,FeS	$2/3\ (Fe) + (S_2) = 2/3FeS + 2/3(S_2)$	$= 2/3\ \mu^\circ_{FeS} - 2/3\ \mu^\circ_{(Fe)} - 1/3\ \mu^\circ_{(S_2)}$	$RT \ln p_{S_2} = \Delta G^\circ_r + 3.0504\ T \log(p_{S_2}/p_{Fe})$
(14) $(Fe)/(S_2)FeS_{1.140}$	$0.637(Fe) + (S_2) = 0.637FeS_{1.140} + 0.637(S_2)$	$= 0.637\mu^\circ_{FeS_{1.140}} - 0.637\mu^\circ_{(Fe)} - 0.363\mu^\circ_{(S_2)}$	$RT \ln p_{S_2} = \Delta G^\circ_r + 2.9147\ T \log(p_{S_2}/p_{Fe})$
(15) $(Fe)/(S_1)$,FeS	$(Fe) + (S_2) = FeS + (S_1)$	$= \mu^\circ_{FeS} + \mu^\circ_{(S_1)} - \mu^\circ_{(Fe)} - \mu^\circ_{(S_2)}$	$RT \ln p_{S_2} = \Delta G^\circ + 4.5756\ T \log(p_{S_1}/p_{Fe})$

TABLE II Equilibria and reactions considered

Formulae for the calculation of the standard free enthalpies of reaction ΔG°_r

(see page 5)

		①			②			③		
		FE /FES			FE /FES1.140			FES /FES1.140		
T°K	1000/T	ΔG_r°(CAL.)	$E_{S_2(g)}$(mV)	LOG P_{S_2}	ΔG_r°(CAL.)	$E_{S_2(g)}$(mV)	LOG P_{S_2}	ΔG_r°(CAL.)	$E_{S_2(g)}$(mV)	LOG P_{S_2}
0	∞	-79470	-861	-∞	-81497	-883	-∞	-97704	-1057	-∞
100	10.000	-75722	-820	-163.4909	-77757	-843	-170.0883	-92648	-1004	-202.4887
200	5.000	-71630	-776	-78.2794	-73552	-800	-80.6692	-87032	-970	-97.8274
298	3.356	-67763	-734	-49.6968	-70108	-760	-81.4166	-82698	-948	-63.7698
300	3.333	-67691	-733	-49.3130	-70040	-759	-81.0843	-82608	-948	-63.3186
400	2.500	-63931	-693	-34.9384	-66449	-720	-36.3068	-84587	-916	-46.1836
500	2.000	-60498	-656	-26.3312	-63036	-683	-27.3931	-79587	-862	-34.8925
600	1.667	-57739	-625	-21.0319	-59886	-648	-21.7044	-74461	-807	-27.1933
700	1.429	-54947	-595	-17.1383	-56740	-615	-17.7191	-69640	-754	-21.7487
800	1.250	-52206	-566	-14.2621	-53786	-583	-14.6773	-64482	-701	-17.6704
900	1.111	-49476	-536	-12.0140	-50718	-549	-12.3161	-59497	-647	-14.4968
1000	1.000	-46784	-506	-10.2116	-48094	-520	-10.6989	-54968	-704	-14.1988
1100	.909	-43988	-475	-8.7882	-44890	-488	-8.8898	-49877	-537	-9.8840
1200	.833	-41046	-444	-7.4738	-41466	-449	-7.3880	-44840	-482	-8.1119
1300	.769	-38192	-414	-6.4827	-38844	-418	-6.4462	-39498	-428	-6.6402
1400	.714	-35286	-382	-5.3840	-35869	-388	-5.3968	-34498	-373	-5.3884
1500	.667	-32016	-347	-4.8184	-32836	-349	-4.6997	-26884	-291	-3.9170
1600	.625	-31384	-339	-4.2787	-29309	-317	-4.0884	-14970	-162	-2.0440
1700	.588	-27640	-321	-3.8109	-26436	-286	-3.3986	-3899	-39	- .4427
1800	.556	-27948	-302	-3.3986	-23631	-256	-3.0698	7113	77	.8636
1900	.526	-25276	-280	-2.9764						
2000	.500	-22776	-257	-2.5981						
2500	.400	-13190	-142	-1.1321						
3000	.333	-2460	-36	-.1798						
3500	.286	7922	85	.4947						

		④			⑤			⑦	
		FES1.140 /FES2			FE /(FES)			FES /(FeS)	
T°K	1000/T	ΔG_r°(CAL.)	$E_{S_2(g)}$(mV)	LOG P_{S_2}	ΔG_r°(CAL.)	$E_{S_2(g)}$(mV)	LOG P_{S_2}	ΔG_r°(CAL.)	LOG P_{S_2}
0	∞	-36899	-613	-∞	146166	1384	∞	112022	-∞
100	10.000	-35286	-366	-114.2714	141186	1330	308.3468	108494	-237.0868
200	5.000	-34417	-302	-38.7283	136739	1471	148.3892	103687	-113.3343
298	3.356	-40270	-436	-29.3337	130419	1413	98.6481	99091	-72.6728
300	3.333	-40194	-435	-29.2583	130319	1412	96.9376	99009	-72.1253
400	2.500	-37711	-368	-18.4189	124941	1354	68.3648	94436	-51.5976
500	2.000	-37130	-294	-11.8886	119612	1296	52.3823	90138	-39.4069
600	1.667	-30397	-221	-7.4896	114348	1239	41.6363	86042	-31.3409
700	1.429	-13807	-146	-4.2171	109153	1183	34.0792	82080	-25.4172
800	1.250	-6894	-71	-1.8814	104046	1127	28.4841	78126	-21.3431
900	1.111	311	3	.0799	99048	1073	24.0382	74261	-18.0331
1000	1.000	8869	96	1.9361	94166	1020	20.3800	70449	-15.3988
1100	.909	14025	152	2.7868	89486	969	17.7738	66678	-13.2477
1200	.833	20843	225	3.7960	84868	920	15.4866	62957	-11.4661
1300	.769	27648	299	4.6471	80378	871	13.3188	59289	-9.9667
1400	.714	34438	373	5.3760	75944	822	11.8894	55663	-8.6897
1500	.667				71548	775	10.4866	52299	-7.6189
1600	.625				67234	728	9.1838	49279	-6.7312
1700	.588				62970	682	8.0794	46305	-5.9829
1800	.556				58786	637	7.1376	43364	-5.2631
1900	.526				54634	596	6.3204	40455	-4.6534
2000	.500				51376	556	5.6141	37976	-4.1061
2500	.400				33980	368	2.9709	23583	-2.0618
3000	.333				17872	193	1.3080	10166	- .7406
3500	.286				2360	25	.1474	-2781	.1737

TABLE III Standard free enthalpies ΔG_r° of the considered reactions and the corresponding logarithms of partial pressures of gaseous (S_2) in equilibrium. Reactions 1 to 7

(see page 5)

		(8)			(9)			(10)		
		(Fe) /FeS			(FE) /FeS_{1+x}			(FE) /(FES)		
T°K	1000/T	ΔG(CAL.)	E_{min}(MV)	LOG P_{S_2}	ΔG(CAL.)	E_{min}(MV)	LOG P_{S_2}	ΔG(CAL.)	E_{min}(MV)	LOG P_{S_2}
0	∞	-276938	-3002	-∞	-234642	-2760	-∞	-91314	-986	-∞
100	10.000	-266898	-2893	-383.3071	-245444	-2660	-336.4193	-49990	-541	-109.2834
200	5.000	-255990	-2770	-279.2967	-235146	-2549	-286.9869	-48816	-528	-92.6888
298	3.356	-244548	-2651	-179.3493	-225148	-2440	-168.1194	-46366	-502	-34.0844
300	3.333	-244340	-2648	-178.0022	-224997	-2438	-163.8816	-46330	-502	-33.7515
400	2.500	-233266	-2528	-127.4910	-214982	-2330	-117.4447	-44394	-481	-24.2888
500	2.000	-222740	-2414	-97.3599	-205144	-2223	-89.6687	-42438	-459	-18.9462
600	1.667	-212530	-2304	-77.4143	-195386	-2120	-71.2319	-40446	-438	-14.7325
700	1.429	-202354	-2195	-63.2484	-186190	-2018	-58.1313	-38494	-416	-12.0099
800	1.250	-192702	-2089	-52.6439	-176941	-1918	-48.2382	-36450	-395	-9.9877
900	1.111	-182946	-1983	-44.4232	-167773	-1818	-40.7410	-34484	-373	-8.3993
1000	1.000	-173282	-1878	-37.8709	-159948	-1732	-34.9561	-32392	-351	-7.0793
1100	.909	-163696	-1774	-32.3235	-149651	-1622	-29.7330	-30340	-328	-6.0280
1200	.833	-154202	-1671	-28.0841	-140704	-1525	-25.6250	-28288	-306	-5.1320
1300	.769	-144798	-1569	-24.3438	-131827	-1429	-22.1639	-26228	-284	-4.4093
1400	.714	-135490	-1468	-21.1510	-123060	-1334	-19.2106	-24160	-261	-3.7716
1500	.667	-126662	-1373	-18.4547	-114383	-1240	-16.6656	-22084	-239	-3.2176
1600	.625	-118938	-1288	-16.1943	-106813	-1147	-14.4834	-20000	-216	-2.7319
1700	.588	-110916	-1198	-14.2078	-97364	-1055	-12.5170	-17906	-194	-2.3030
1800	.556	-102528	-1111	-12.4486	-89043	-966	-10.8113	-15800	-171	-1.9184
1900	.526	-94958	-1029	-10.8767				-13648	-147	-1.5699
2000	.500	-86646	-939	-9.4683				-11494	-124	-1.2560
2500	.400	-47738	-517	-4.1730				-588	-6	-.0914
3000	.333	-9754	-106	-.7106				10878	114	.7706
3500	.286	27108	293	1.6927				21946	233	1.3484
4000	.250							33388	361	1.8810
4500	.222							46428	492	2.3063
5000	.200							57880	627	2.5886
5500	.182							70888	768	2.8049
6000	.167							83640	906	3.0466

		(11)			(12)			(13)		
		(FE) /(S_2), Fe			(FE) /(S_2), Fe			(FE) /(S_2), FeS		
T°K	1000/T	ΔG(CAL.)	E'_{min}(MV)	LOG P'_{S_2}	ΔG(CAL.)	E'_{min}(MV)	LOG P'_{S_2}	ΔG(CAL.)	E'_{min}(MV)	LOG P'_{S_2}
0	∞	-98740	-1070	-∞	-96790	-1049	-∞	-98319	-1000	-∞
100	10.000	-93988	-1034	-208.9081	-92386	-1001	-201.9181	-88969	-964	-194.4338
200	5.000	-91978	-997	-100.5092	-87448	-948	-95.5809	-88196	-923	-93.0982
298	3.356	-88393	-958	-64.8266	-82748	-897	-60.4867	-81519	-883	-59.7884
300	3.333	-88329	-957	-64.3449	-82660	-896	-60.2188	-81446	-882	-59.3336
400	2.500	-84648	-917	-46.3606	-77966	-846	-42.5988	-77798	-842	-42.4838
500	2.000	-81021	-878	-35.4144	-73366	-795	-32.0684	-74846	-804	-32.4838
600	1.667	-77396	-839	-28.1916	-68862	-746	-25.0830	-70843	-768	-25.8846
700	1.429	-73804	-800	-23.0487	-64460	-698	-20.1284	-67917	-731	-21.0798
800	1.250	-70248	-761	-19.1909	-60154	-652	-16.4334	-64823	-696	-17.9477
900	1.111	-66736	-723	-16.2098	-55988	-606	-13.5888	-60981	-661	-14.8883
1000	1.000	-63279	-686	-13.8297	-51890	-562	-11.3486	-57766	-626	-12.4230
1100	.909	-59898	-649	-11.9007	-47988	-520	-9.5344	-54368	-591	-10.3411
1200	.833	-56578	-613	-10.3043	-44218	-479	-8.0528	-51400	-557	-8.3612
1300	.769	-53303	-577	-8.9611	-40580	-439	-6.8171	-48368	-523	-6.1141
1400	.714	-50052	-542	-7.8139	-36934	-400	-5.7687	-45163	-489	-7.0803
1500	.667	-46822	-507	-6.8221	-33372	-361	-4.8523	-42230	-457	-6.1519
1600	.625	-43617	-472	-5.9978	-29860	-323	-4.0787	-39819	-428	-5.3981
1700	.588	-40438	-438	-5.1987	-26408	-286	-3.3990	-36838	-399	-4.7389
1800	.556	-37293	-404	-4.5280	-23088	-249	-2.7960	-34173	-370	-4.1494
1900	.526	-34341	-372	-3.9501	-20036	-217	-2.3047	-31519	-341	-3.6898
2000	.500	-31439	-340	-3.4391	-17140	-186	-1.8730	-28881	-313	-3.1960
2500	.400	-17284	-187	-1.2110	-3460	-37	-.3028	-15919	-172	-1.3916
3000	.333	-3647	-39	-.2697	9140	99	.6699	-3231	-35	-.2368
3500	.286	9593	103	.5990	20898	226	1.3049	9038	97	.5642

TABLE III Standard free enthalpies ΔG_r° of the considered reactions and the corresponding logarithms of partial pressures of gaseous (S_2) in equilibrium. Reactions 8 to 13

(see page 5)

		(14)			(15)		
		(FE) / (S_2), $FeS_{1.140}$			(FE) / (S_1), FeS		
T°K	1000/T	ΔG_r°(CAL.)	E°_{SSE}(MV)	LOG P_{S_2}	ΔG_r°(CAL.)	E°_{SSE}(MV)	LOG P_{S_2}
0	∞	-92478	-1002	-∞	-88134	-955	-∞
100	10.000	-89137	-966	-194.8094	-84054	-911	-183.7005
200	5.000	-85398	-925	-93.3189	-79551	-862	-86.9296
298	3.356	-81765	-886	-59.9657	-75255	-815	-55.1914
300	3.333	-81697	-885	-59.5164	-75175	-814	-54.7651
400	2.500	-78064	-846	-42.6523	-70948	-769	-38.7643
500	2.000	-74502	-807	-32.5649	-67032	-726	-29.2998
600	1.667	-71020	-769	-25.8691	-63300	-686	-23.0571
700	1.429	-67618	-733	-21.1114	-59703	-647	-18.6402
800	1.250	-64259	-696	-17.5548	-56180	-609	-15.3477
900	1.111	-60930	-660	-14.7959	-52716	-571	-12.8012
1000	1.000	-58067	-629	-12.6949	-49307	-534	-10.7761
1100	.909	-54348	-589	-10.7980	-45944	-498	-9.1283
1200	.833	-51099	-553	-9.3064	-42632	-462	-7.7644
1300	.769	-47879	-519	-8.0492	-39371	-426	-6.6189
1400	.714	-44691	-484	-6.9766	-36160	-392	-5.6448
1500	.667	-41540	-450	-6.0524	-33194	-359	-4.8364
1600	.625	-38428	-416	-5.2490	-30592	-331	-4.1787
1700	.588	-35359	-383	-4.5457	-28024	-303	-3.6027
1800	.556	-32337	-350	-3.9263	-25485	-276	-3.0943
1900	.526				-22956	-248	-2.6406
2000	.500				-20458	-221	-2.2356
2500	.400				-8325	-90	-.7278
3000	.333				3340	36	.2433
3500	.286				14410	156	.8998
4000	.250						
4500	.222						
5000	.200						
5500	.182						

TABLE III Standard free enthalpies ΔG_r° of the considered reactions and the corresponding logarithms of partial pressures of gaseous (S_2) in equilibrium. Reactions 14 and 15

(see page 5)

P 30 blank

N°	Eqilibria	Temperature range (°k)	RT ln p_{S_2} (calories)	E_{sse} (mv)	log p_{S_2}
	SYSTEM SULPHUR-IRON				
①	FE /FES	0 - 100	-79478 + 37.560 T	-861.6 + 407 T	-17370.0/T + 8.209
		100 - 200	-79810 + 40.880 T	-865.2 + 443 T	-17442.5/T + 8.934
		200 - 298	-79536 + 39.510 T	-862.3 + 428 T	-17382.6/T + 8.635
		298 - 500	-78183 + 34.970 T	-847.6 + 379 T	-17086.9/T + 7.643
		500 - 1000	-74672 + 27.948 T	-809.5 + 303 T	-16319.6/T + 6.108
		1000 - 1463	-75069 + 28.345 T	-813.8 + 307 T	-16406.4/T + 6.195
		1463 - 1809	-58164 + 16.790 T	-630.6 + 182 T	-12711.8/T + 3.669
		1809 - 2000	-63816 + 21.020 T	-713.5 + 228 T	-14384.1/T + 4.594
		2000 - 3500	-66040 + 21.132 T	-715.9 + 229 T	-14433.1/T + 4.618
②	FE /FES1.140	0 - 100	-81452 + 36.700 T	-883.0 + 398 T	-17801.4/T + 8.021
		100 - 200	-81747 + 39.650 T	-886.2 + 430 T	-17863.9/T + 8.666
		200 - 298	-81396 + 37.898 T	-882.4 + 411 T	-17789.1/T + 8.283
		298 - 500	-80533 + 35.000 T	-873.1 + 379 T	-17600.5/T + 7.649
		500 - 1000	-77112 + 28.158 T	-836.0 + 305 T	-16852.9/T + 6.154
		1000 - 1809	-80607 + 31.654 T	-873.9 + 343 T	-17616.7/T + 6.918
③	FES /FES1.140	0 - 100	-95695 + 30.570 T	-1037.4 + 331 T	-20914.2/T + 6.681
		100 - 200	-95738 + 31.000 T	-1037.9 + 336 T	-20923.6/T + 6.775
		200 - 298	-94815 + 26.388 T	-1027.9 + 286 T	-20721.9/T + 5.767
		298 - 500	-97467 + 35.287 T	-1056.6 + 383 T	-21301.5/T + 7.712
		500 - 1000	-94680 + 29.712 T	-1026.4 + 322 T	-20692.4/T + 6.494
		1000 - 1463	-141142 + 76.175 T	-1530.1 + 826 T	-30846.7/T + 16.648
		1463 - 1800	-189508 + 109.234 T	-2054.5 + 1 184 T	-41417.1/T + 23.873
④	FES1.140 /FES2	0 - 100	-56565 + 42.720 T	-613.2 + 463 T	-12362.3/T + 9.336
		100 - 200	-58164 + 58.710 T	-630.6 + 636 T	-12711.8/T + 12.831
		200 - 298	-58968 + 62.735 T	-639.3 + 680 T	-12887.5/T + 13.711
		298 - 500	-59661 + 65.059 T	-646.8 + 705 T	-13038.9/T + 14.219
		500 - 1000	-63123 + 71.982 T	-684.3 + 780 T	-13795.6/T + 15.732
		1000 - 1400	-55088 + 63.948 T	-597.2 + 693 T	-12039.5/T + 13.976

TABLE IV Influence of temperature on the equilibrium conditions of the considered reactions.
Approximate formulae.
IV.1 Reactions 1 to 4

(see page 5)

N°	Equilibria	Temperature range (°K)	Equilibrium Formulae
6	FE /(FES)	0 - 100	146166 - 49.800 T + 9.151 T LOG P(FES)
		100 - 200	146632 - 54.460 T + 9.151 T LOG P(FES)
		200 - 298	146597 - 54.286 T + 9.151 T LOG P(FES)
		298 - 500	146364 - 53.505 T + 9.151 T LOG P(FES)
		500 - 1000	145058 - 50.892 T + 9.151 T LOG P(FES)
		1000 - 1809	138390 - 44.229 T + 9.151 T LOG P(FES)
		1809 - 2000	124799 - 36.712 T + 9.151 T LOG P(FES)
		2000 - 3500	116730 - 32.677 T + 9.151 T LOG P(FES)
7	FES /(FES)	0 - 100	112822 - 43.680 T
		100 - 200	113221 - 47.670 T
		200 - 298	113066 - 46.998 T
		298 - 500	112273 - 44.238 T
		500 - 1000	109865 - 39.420 T
		1000 - 1463	107395 - 36.930 T
		1463 - 2000	96276 - 29.350 T
		2000 - 3500	91385 - 26.905 T
8	(FE) /FES	0 - 100	-276958 + 100.600 T - 9.151 T LOG P(FE)
		100 - 200	-278206 + 113.080 T - 9.151 T LOG P(FE)
		200 - 298	-278124 + 112.673 T - 9.151 T LOG P(FE)
		298 - 500	-276720 + 107.960 T - 9.151 T LOG P(FE)
		500 - 1000	-272198 + 98.916 T - 9.151 T LOG P(FE)
		1000 - 1463	-267762 + 94.480 T - 9.151 T LOG P(FE)
		1463 - 2000	-244391 + 79.873 T - 9.151 T LOG P(FE)
		2000 - 3500	-238318 + 75.836 T - 9.151 T LOG P(FE)
9	(FE) /FES1.140	0 - 100	-254642 + 91.980 T - 8.026 T LOG P(FE)
		100 - 200	-255742 + 102.980 T - 8.026 T LOG P(FE)
		200 - 298	-255556 + 102.051 T - 8.026 T LOG P(FE)
		298 - 500	-254651 + 99.015 T - 8.026 T LOG P(FE)
		500 - 1000	-250343 + 90.398 T - 8.026 T LOG P(FE)
		1000 - 1800	-248572 + 88.627 T - 8.026 T LOG P(FE)
10	(FE) /(FES)	0 - 100	-51314 + 13.240 T + 9.151 T LOG(P(FES)/P(FE))
		100 - 200	-51764 + 17.740 T + 9.151 T LOG(P(FES)/P(FE))
		200 - 298	-51991 + 18.878 T + 9.151 T LOG(P(FES)/P(FE))
		298 - 500	-52172 + 19.485 T + 9.151 T LOG(P(FES)/P(FE))
		500 - 1000	-52468 + 20.076 T + 9.151 T LOG(P(FES)/P(FE))
		1000 - 2000	-53290 + 20.898 T + 9.151 T LOG(P(FES)/P(FE))
		2000 - 5000	-57723 + 23.115 T + 9.151 T LOG(P(FES)/P(FE))

TABLE IV Influence of temperature on the equilibrium conditions of the considered reactions.
Approximate formulae.
IV.2 Reactions 6 to 10

(see page 5)

E_{sse}(mv) $(= \frac{RT \ln p_{S_2}}{92.242})$	$\log p_{S_2}$ $(= \frac{RT \ln p_{S_2}}{4.5756\ T})$ (or log p)
1584.6 - 540 T + .099 T LOG P(FES)	31944.7/T - 10.884 + 2.000 LOG P(FES)
1589.6 - 590 T + .099 T LOG P(FES)	32046.5/T - 11.902 + 2.000 LOG P(FES)
1599.3 - 589 T + .099 T LOG P(FES)	32038.9/T - 11.864 + 2.000 LOG P(FES)
1586.7 - 580 T + .099 T LOG P(FES)	31987.9/T - 11.694 + 2.000 LOG P(FES)
1572.6 - 552 T + .099 T LOG P(FES)	31702.5/T - 11.122 + 2.000 LOG P(FES)
1500.3 - 479 T + .099 T LOG P(FES)	30245.2/T - 9.665 + 2.000 LOG P(FES)
1353.0 - 398 T + .099 T LOG P(FES)	27274.9/T - 8.023 + 2.000 LOG P(FES)
1265.5 - 354 T + .099 T LOG P(FES)	25511.4/T - 7.142 + 2.000 LOG P(FES)
	LOG P(FES) = -24657.3/T + 9.546
	LOG P(FES) = -24744.5/T + 10.418
	LOG P(FES) = -24710.6/T + 10.250
	LOG P(FES) = -24537.3/T + 9.668
	LOG P(FES) = -24011.1/T + 8.615
	LOG P(FES) = -23471.2/T + 8.075
	LOG P(FES) = -21041.2/T + 6.415
	LOG P(FES) = -19972.2/T + 5.880
-3002.5 + 1.091 T - .099 T LOG P(FE)	-60529.3/T + 21.986 - 2.000 LOG P(FE)
-3016.0 + 1.226 T - .099 T LOG P(FE)	-60802.1/T + 24.714 - 2.000 LOG P(FE)
-3015.2 + 1.221 T - .099 T LOG P(FE)	-60784.2/T + 24.625 - 2.000 LOG P(FE)
-2999.9 + 1.170 T - .099 T LOG P(FE)	-60477.3/T + 23.595 - 2.000 LOG P(FE)
-2950.9 + 1.072 T - .099 T LOG P(FE)	-59489.0/T + 21.618 - 2.000 LOG P(FE)
-2902.8 + 1.024 T - .099 T LOG P(FE)	-58519.5/T + 20.649 - 2.000 LOG P(FE)
-2671.1 + .866 T - .099 T LOG P(FE)	-53848.9/T + 17.456 - 2.000 LOG P(FE)
-2583.6 + .822 T - .099 T LOG P(FE)	-52084.5/T + 16.574 - 2.000 LOG P(FE)
-2760.6 + .997 T - .087 T LOG P(FE)	-55652.2/T + 20.102 - 1.754 LOG P(FE)
-2772.5 + 1.114 T - .087 T LOG P(FE)	-55892.6/T + 22.506 - 1.754 LOG P(FE)
-2770.5 + 1.106 T - .087 T LOG P(FE)	-55851.9/T + 22.303 - 1.754 LOG P(FE)
-2760.7 + 1.073 T - .087 T LOG P(FE)	-55654.1/T + 21.640 - 1.754 LOG P(FE)
-2714.0 + .980 T - .087 T LOG P(FE)	-54712.6/T + 19.757 - 1.754 LOG P(FE)
-2694.8 + .961 T - .087 T LOG P(FE)	-54325.6/T + 19.370 - 1.754 LOG P(FE)
-556.3 + .144 T + .099 T LOG(P(FES)/P(FE)	-11214.7/T + 2.894 + 2.000 LOG(P(FES)/P(FE))
-561.2 + .192 T + .099 T LOG(P(FES)/P(FE)	-11313.1/T + 3.877 + 2.000 LOG(P(FES)/P(FE))
-563.6 + .205 T + .099 T LOG(P(FES)/P(FE)	-11362.7/T + 4.126 + 2.000 LOG(P(FES)/P(FE))
-565.6 + .211 T + .099 T LOG(P(FES)/P(FE)	-11402.2/T + 4.258 + 2.000 LOG(P(FES)/P(FE))
-568.3 + .219 T + .099 T LOG(P(FES)/P(FE)	-11466.9/T + 4.388 + 2.000 LOG(P(FES)/P(FE))
-577.7 + .227 T + .099 T LOG(P(FES)/P(FE)	-11646.6/T + 4.567 + 2.000 LOG(P(FES)/P(FE))
-625.9 + .251 T + .099 T LOG(P(FES)/P(FE)	-12615.4/T + 5.052 + 2.000 LOG(P(FES)/P(FE))

N°	Equilibria	Temperature range (°K)	Equilibrium Formulae
11	(FE) /(S_2), Fe	0 - 100	-98740 + 31.520 T + 4.576 T LOG(P(S2)/P(FE))
		100 - 200	-99198 + 36.100 T + 4.576 T LOG(P(S2)/P(FE))
		200 - 298	-99294 + 36.582 T + 4.576 T LOG(P(S2)/P(FE))
		298 - 500	-99268 + 36.495 T + 4.576 T LOG(P(S2)/P(FE))
		500 - 1000	-98763 + 35.484 T + 4.576 T LOG(P(S2)/P(FE))
		1000 - 1809	-95761 + 32.483 T + 4.576 T LOG(P(S2)/P(FE))
		1809 - 2000	-89714 + 29.140 T + 4.576 T LOG(P(S2)/P(FE))
		2000 - 3500	-86139 + 27.352 T + 4.576 T LOG(P(S2)/P(FE))
12	(FE) /(S_1), Fe	0 - 100	-96790 + 44.040 T + 9.151 T LOG(P(S1)/P(FE))
		100 - 200	-97304 + 49.180 T + 9.151 T LOG(P(S1)/P(FE))
		200 - 298	-97100 + 48.163 T + 9.151 T LOG(P(S1)/P(FE))
		298 - 500	-96588 + 46.446 T + 9.151 T LOG(P(S1)/P(FE))
		500 - 1000	-94842 + 42.952 T + 9.151 T LOG(P(S1)/P(FE))
		1000 - 1809	-87967 + 36.072 T + 9.151 T LOG(P(S1)/P(FE))
		1809 - 2000	-75394 + 29.127 T + 9.151 T LOG(P(S1)/P(FE))
		2000 - 3500	-67857 + 25.359 T + 9.151 T LOG(P(S1)/P(FE))
13	(FE) /(S_2), FeS	0 - 100	-92319 + 33.540 T + 3.050 T LOG(P(S2)/P(FE))
		100 - 200	-92734 + 37.690 T + 3.050 T LOG(P(S2)/P(FE))
		200 - 298	-92708 + 37.561 T + 3.050 T LOG(P(S2)/P(FE))
		298 - 500	-92238 + 35.985 T + 3.050 T LOG(P(S2)/P(FE))
		500 - 1000	-90732 + 32.972 T + 3.050 T LOG(P(S2)/P(FE))
		1000 - 1463	-89292 + 31.493 T + 3.050 T LOG(P(S2)/P(FE))
		1463 - 2000	-82132 + 26.626 T + 3.050 T LOG(P(S2)/P(FE))
		2000 - 3500	-79435 + 25.277 T + 3.050 T LOG(P(S2)/P(FE))
14	(FE) /(S_2), $FeS_{1.140}$	0 - 100	-92478 + 33.410 T + 2.915 T LOG(P(S2)/P(FE))
		100 - 200	-92876 + 37.390 T + 2.915 T LOG(P(S2)/P(FE))
		200 - 298	-92812 + 37.071 T + 2.915 T LOG(P(S2)/P(FE))
		298 - 500	-92479 + 35.935 T + 2.915 T LOG(P(S2)/P(FE))
		500 - 1000	-90917 + 32.830 T + 2.915 T LOG(P(S2)/P(FE))
		1000 - 1800	-90274 + 32.188 T + 2.915 T LOG(P(S2)/P(FE))
15	(FE) /(S_1), FeS	0 - 100	-88134 + 40.800 T + 4.576 T LOG(P(S1)/P(FE))
		100 - 200	-88557 + 45.030 T + 4.576 T LOG(P(S1)/P(FE))
		200 - 298	-88318 + 43.837 T + 4.576 T LOG(P(S1)/P(FE))
		298 - 500	-87385 + 40.708 T + 4.576 T LOG(P(S1)/P(FE))
		500 - 1000	-84757 + 35.450 T + 4.576 T LOG(P(S1)/P(FE))
		1000 - 1463	-82174 + 32.868 T + 4.576 T LOG(P(S1)/P(FE))
		1463 - 2000	-71226 + 25.384 T + 4.576 T LOG(P(S1)/P(FE))
		2000 - 3500	-66948 + 23.245 T + 4.576 T LOG(P(S1)/P(FE))

TABLE IV Influence of temperature on the equilibrium conditions of the considered reactions. Approximate formulae.

IV.3 Reactions 11 to 15

(see page 5)

E_{sse}(mv) $\left(= \frac{RT \ln p_{S_2}}{92.242}\right)$	$\log p_{S_2}$ $\left(= \frac{RT \ln p_{S_2}}{4.5756\ T}\right)$
-1070.4 + .342 T + .050 T LOG(P(S2)/P(FE))	-21579.7/T + 6.889 + 1.000 LOG(P(S2)/P(FE))
-1075.4 + .391 T + .050 T LOG(P(S2)/P(FE))	-21679.8/T + 7.890 + 1.000 LOG(P(S2)/P(FE))
-1076.5 + .397 T + .050 T LOG(P(S2)/P(FE))	-21700.8/T + 7.995 + 1.000 LOG(P(S2)/P(FE))
-1076.2 + .396 T + .050 T LOG(P(S2)/P(FE))	-21695.1/T + 7.976 + 1.000 LOG(P(S2)/P(FE))
-1070.7 + .385 T + .050 T LOG(P(S2)/P(FE))	-21584.7/T + 7.755 + 1.000 LOG(P(S2)/P(FE))
-1038.1 + .352 T + .050 T LOG(P(S2)/P(FE))	-20928.6/T + 7.099 + 1.000 LOG(P(S2)/P(FE))
-972.6 + .316 T + .050 T LOG(P(S2)/P(FE))	-19607.0/T + 6.368 + 1.000 LOG(P(S2)/P(FE))
-933.8 + .297 T + .050 T LOG(P(S2)/P(FE))	-19825.7/T + 5.978 + 1.000 LOG(P(S2)/P(FE))
-1049.3 + .477 T + .099 T LOG(P(S1)/P(FE))	-21153.5/T + 9.625 + 2.000 LOG(P(S1)/P(FE))
-1054.9 + .533 T + .099 T LOG(P(S1)/P(FE))	-21263.8/T + 10.748 + 2.000 LOG(P(S1)/P(FE))
-1052.7 + .522 T + .099 T LOG(P(S1)/P(FE))	-21221.3/T + 10.526 + 2.000 LOG(P(S1)/P(FE))
-1047.1 + .504 T + .099 T LOG(P(S1)/P(FE))	-21109.4/T + 10.151 + 2.000 LOG(P(S1)/P(FE))
-1028.2 + .466 T + .099 T LOG(P(S1)/P(FE))	-20727.8/T + 9.387 + 2.000 LOG(P(S1)/P(FE))
-953.7 + .391 T + .099 T LOG(P(S1)/P(FE))	-19225.2/T + 7.885 + 2.000 LOG(P(S1)/P(FE))
-817.4 + .316 T + .099 T LOG(P(S1)/P(FE))	-16477.4/T + 6.366 + 2.000 LOG(P(S1)/P(FE))
-735.6 + .275 T + .099 T LOG(P(S1)/P(FE))	-14830.2/T + 5.542 + 2.000 LOG(P(S1)/P(FE))
-1000.8 + .364 T + .033 T LOG(P(S2)/P(FE))	-20176.4/T + 7.330 + .667 LOG(P(S2)/P(FE))
-1005.3 + .409 T + .033 T LOG(P(S2)/P(FE))	-20267.1/T + 8.237 + .667 LOG(P(S2)/P(FE))
-1005.1 + .407 T + .033 T LOG(P(S2)/P(FE))	-20261.4/T + 8.209 + .667 LOG(P(S2)/P(FE))
-1000.0 + .390 T + .033 T LOG(P(S2)/P(FE))	-20158.7/T + 7.865 + .667 LOG(P(S2)/P(FE))
-983.6 + .357 T + .033 T LOG(P(S2)/P(FE))	-19829.5/T + 7.206 + .667 LOG(P(S2)/P(FE))
-967.6 + .341 T + .033 T LOG(P(S2)/P(FE))	-19506.1/T + 6.883 + .667 LOG(P(S2)/P(FE))
-890.4 + .299 T + .033 T LOG(P(S2)/P(FE))	-17950.0/T + 5.819 + .667 LOG(P(S2)/P(FE))
-861.2 + .274 T + .033 T LOG(P(S2)/P(FE))	-17360.6/T + 5.524 + .667 LOG(P(S2)/P(FE))
-1002.6 + .362 T + .032 T LOG(P(S2)/P(FE))	-20211.1/T + 7.302 + .637 LOG(P(S2)/P(FE))
-1006.9 + .405 T + .032 T LOG(P(S2)/P(FE))	-20298.1/T + 8.172 + .637 LOG(P(S2)/P(FE))
-1006.2 + .402 T + .032 T LOG(P(S2)/P(FE))	-20284.1/T + 8.102 + .637 LOG(P(S2)/P(FE))
-1002.5 + .390 T + .032 T LOG(P(S2)/P(FE))	-20211.3/T + 7.858 + .637 LOG(P(S2)/P(FE))
-985.6 + .356 T + .032 T LOG(P(S2)/P(FE))	-19870.0/T + 7.175 + .637 LOG(P(S2)/P(FE))
-979.7 + .349 T + .032 T LOG(P(S2)/P(FE))	-19729.4/T + 7.035 + .637 LOG(P(S2)/P(FE))
-955.5 + .442 T + .050 T LOG(P(S1)/P(FE))	-19261.7/T + 8.917 + 1.000 LOG(P(S1)/P(FE))
-960.1 + .488 T + .050 T LOG(P(S1)/P(FE))	-19354.2/T + 9.841 + 1.000 LOG(P(S1)/P(FE))
-957.5 + .475 T + .050 T LOG(P(S1)/P(FE))	-19301.9/T + 9.581 + 1.000 LOG(P(S1)/P(FE))
-947.3 + .441 T + .050 T LOG(P(S1)/P(FE))	-19098.0/T + 8.897 + 1.000 LOG(P(S1)/P(FE))
-918.9 + .384 T + .050 T LOG(P(S1)/P(FE))	-18523.7/T + 7.748 + 1.000 LOG(P(S1)/P(FE))
-890.9 + .356 T + .050 T LOG(P(S1)/P(FE))	-17959.2/T + 7.183 + 1.000 LOG(P(S1)/P(FE))
-772.2 + .275 T + .050 T LOG(P(S1)/P(FE))	-15566.5/T + 5.548 + 1.000 LOG(P(S1)/P(FE))
-725.8 + .252 T + .050 T LOG(P(S1)/P(FE))	-14631.5/T + 5.080 + 1.000 LOG(P(S1)/P(FE))

p. 36 blank

INDEX OF FIGURES

pages

FIGURE 1 (n°2790) Vapor pressure and decomposition pressure of condensed FeS (according to the data given in the JANAF tables) .. 39

FIGURE 2 (n°2791) Equilibrium diagram log p_{S_2} = f(1/T) for the system S-Fe (temperature from 400°K to infinite) (according to the data given in the JANAF tables)(provisional diagram) 40

FIGURE 3 (n°2792) Equilibrium diagram log p_{S_2} = f(1/T) for the system S-Fe (temperature from 1000°K to infinite) (according to the data given in the JANAF tables) (provisional diagram) 40

FIGURE 4 Plot of H_2S/H_2 versus 1/T for the system iron sulphur (compositions of alloys are in wt% of sulphur) 41

(n°2793) 4a. Original diagram of T.ROSENQVIST(5) 41

(n°2794) 4b. The same diagram with reversed scale of abscissa and with addition of information 41

FIGURE 5 (n°2795) Equilibrium diagram log p_{S_2} = f(1/T) for the system S-H(p_{S_2} from 10^{-11} to 10^{+5} atm. T from 435 to infinite) 41

FIGURE 6 (n°2796) Equilibrium diagram log p_{S_2} = f(1/T) for the system S-Fe (revised version of figure 2) 42

FIGURE 7 (n°2797) Equilibrium diagram log p_{S_2} = f(1/T) for the system S-Fe (revised version of figure 3) 42

FIGURE 8 (n°2804) Composition of pyrrhotite in the system S-Fe as a function of temperature and fugacity of (S_2) (given by P.TOULMIN and P.B.BARTON ,Jr (7)) 43

FIGURE 9 (n°2798) Equilibrium diagram log p_{S_2} = f(1/T) for the system S-Fe (revised version of figure 6) 44

FIGURE 10 (n°2799) Equilibrium diagram log p_{S_2} = f(1/T) for the system S-Fe (revised version of figure 7) 44

FIGURE 11 (n°2800) Equilibrium diagram E_{sse} = f(T) for the system S-Fe 45

FIGURE 12 Phase diagram of iron sulphur system 46

pages

(n°2801) 12a. After John CHIPMAN 46

(n°2802) 12b. A portion of the S-Fe system at low temperatures, modified after TAYLOR(1970) 46

FIGURE 13 Equilibrium diagram T = f (composition) for the system

(n°2803) S-Fe (revision of the figure 12a) 47

FIGURE 14 Equilibrium diagram T = f (composition) for the system

(n°2806) S-Fe (an enlargement diagram of part of figure 13) 48

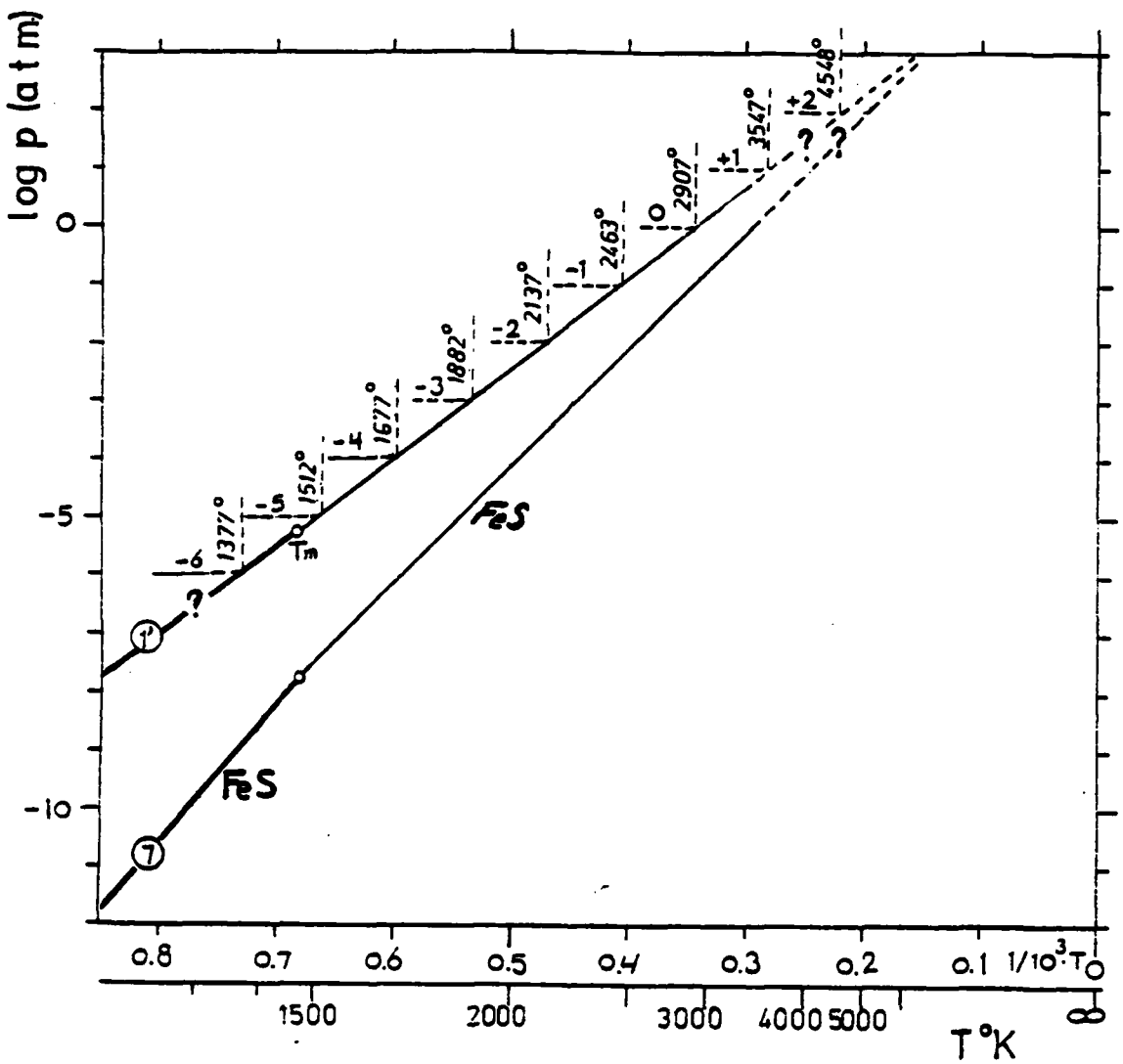

FIGURE 1 Vapor pressure and decomposition pressure of condensed FeS
(according to the data given in the JANAF tables)

line 1' $\log(p_{Fe} + p_{S_2} + p_{S_1})$ in the presence of metallic iron
(this work p.6)

line 7 $\log p_{FeS}$ (according to the JANAF tables(3),p.835,
(this work p. 6)

(see page 6)

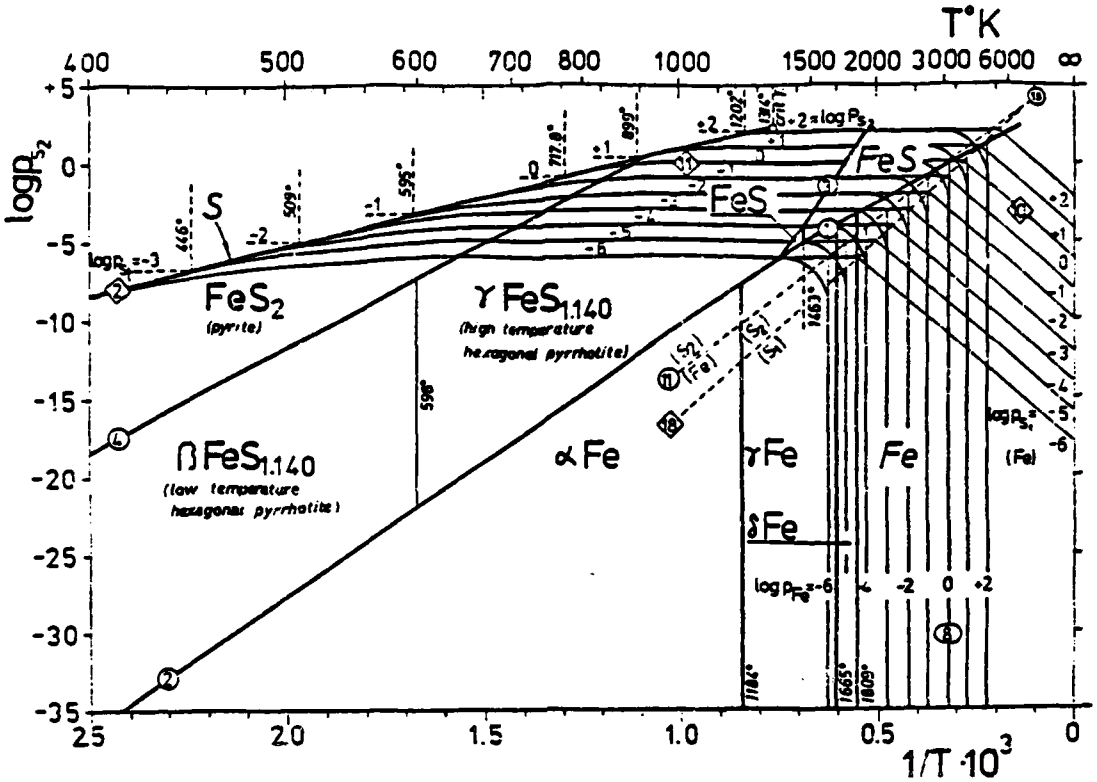

FIGURE 2 Equilibrium diagram log p_{S_2} = f(1/T) for the system S-Fe (temperature from 400°K to infinite) (according to the data given in the JANAF tables) (provisional diagram)

(see page 8)

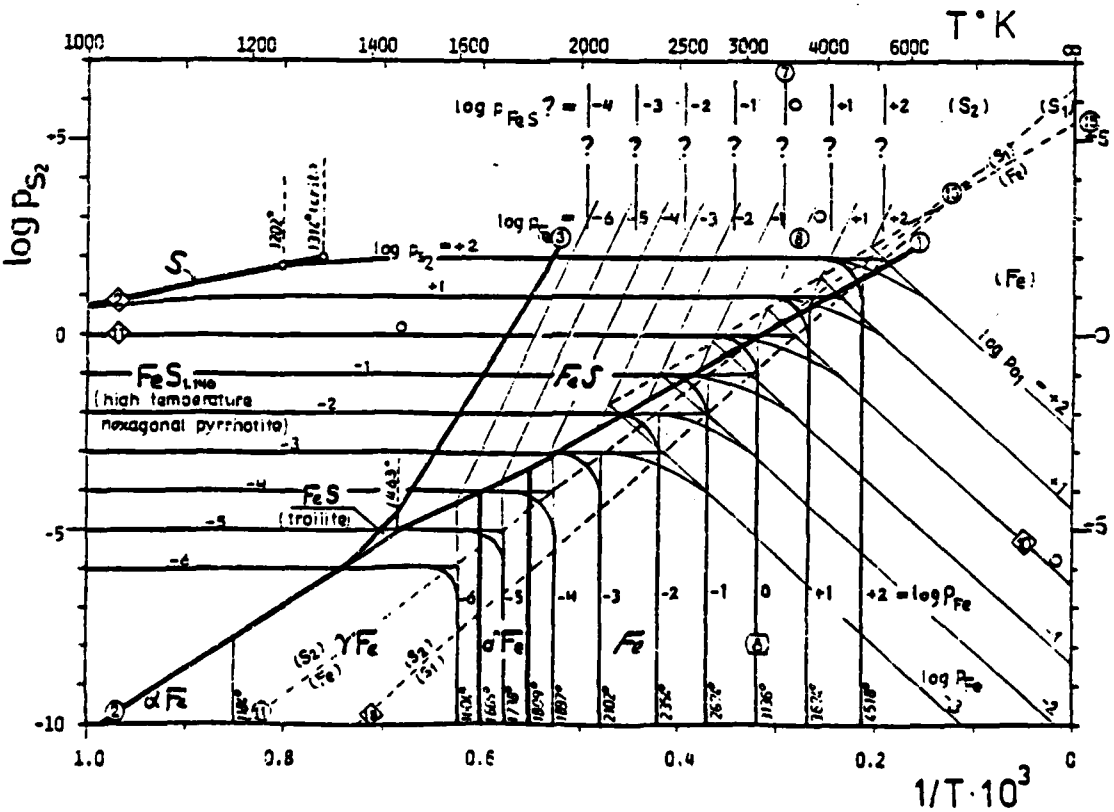

FIGURE 3 Equilibrium diagram log p_{S_2} = f(1/T) for the system S-Fe (temperature from 1000°K to infinite) (according to the data given in the JANAF tables) (provisional diagram)

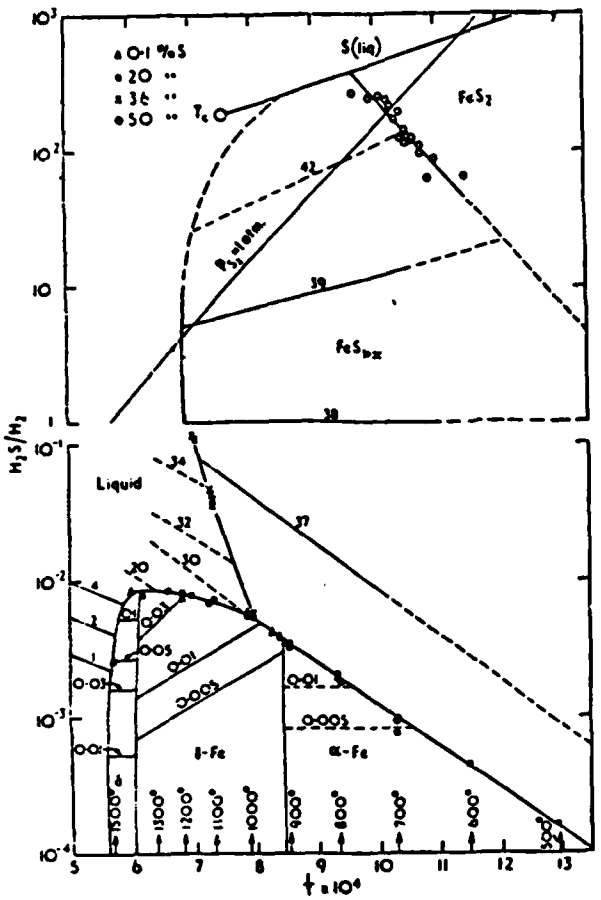

4a. Original diagram of T.ROSENQVIST(5)

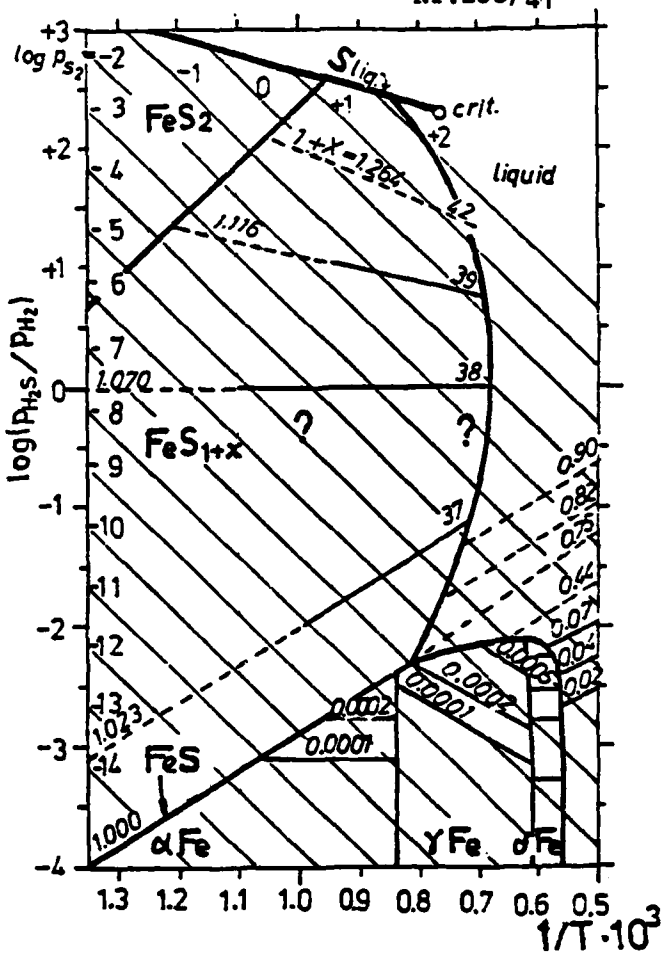

4b. The same diagram with reversed scale of abscissa and with addition information

FIGURE 4 Plot of H_2S/H_2 versus 1/T for the system S-Fe (composition of alloys are in wt% of sulphur) (see page 9)

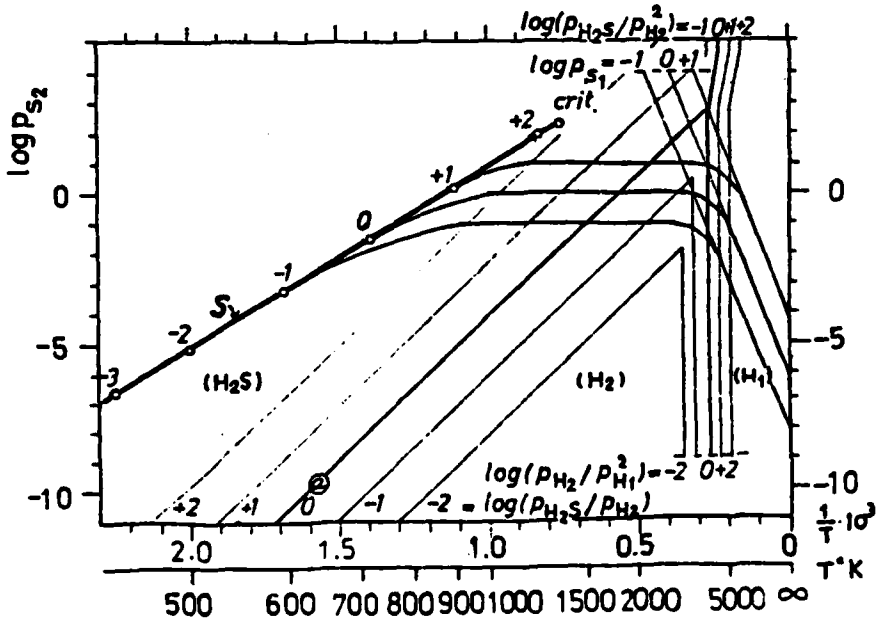

FIGURE 5 Equilibrium diagram log p_{S_2} = f(1/T) for the system S-H (p_{S_2} from 10^{-11} to 10^{+5} atm. T from 435°K to infinite)

(see page 10)

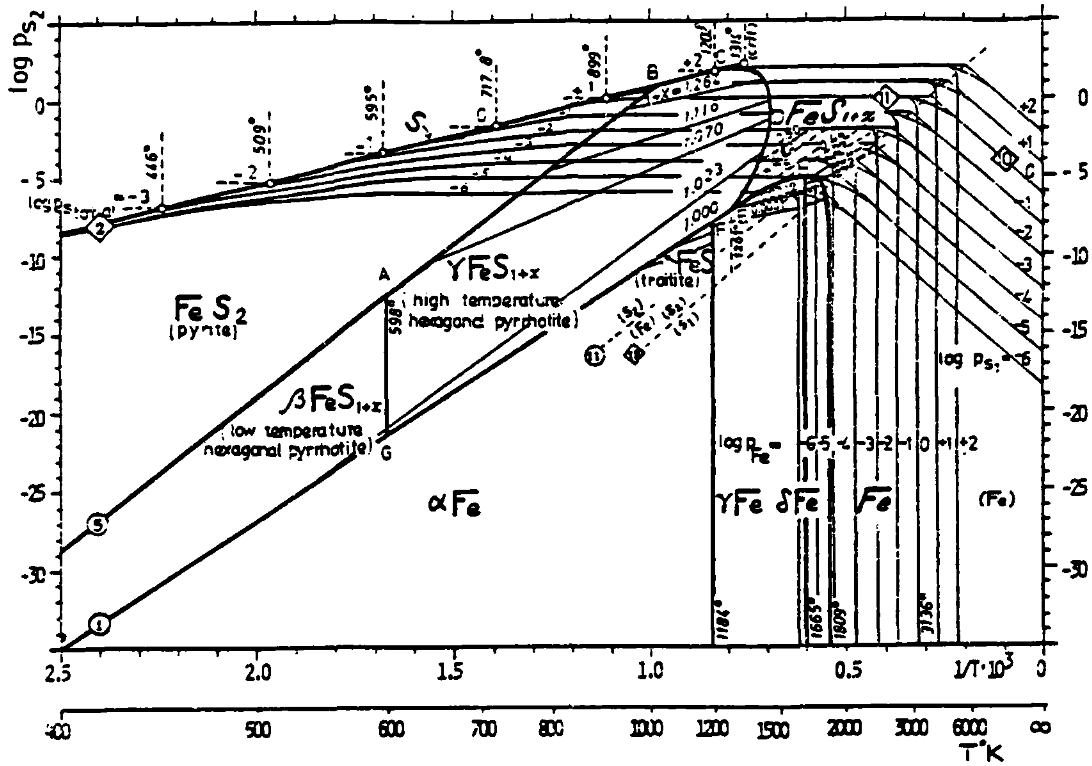

FIGURE 6 Equilibrium diagram log p_{S_2} = f(1/T) for the system S-Fe (revised version of figure 2)

(see page 10)

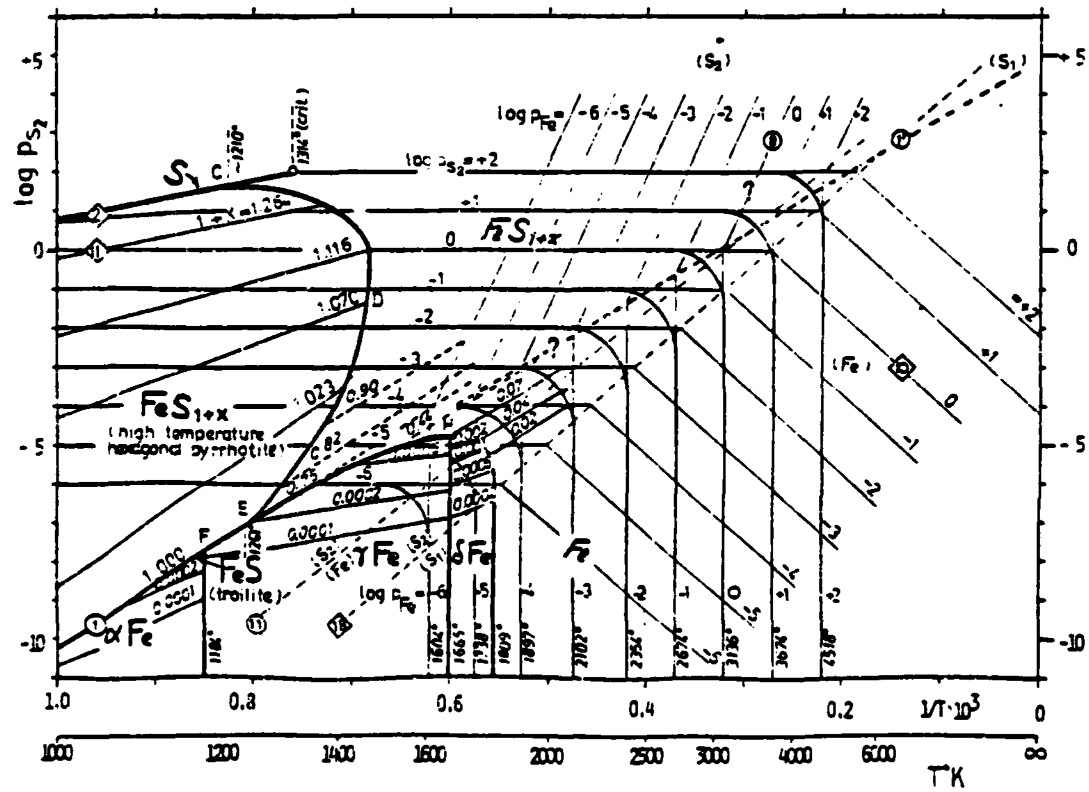

FIGURE 7 Equilibrium diagram log p_{S_2} = f(1/T) for the system S-Fe (revised version of figure 3)

(see page 10)

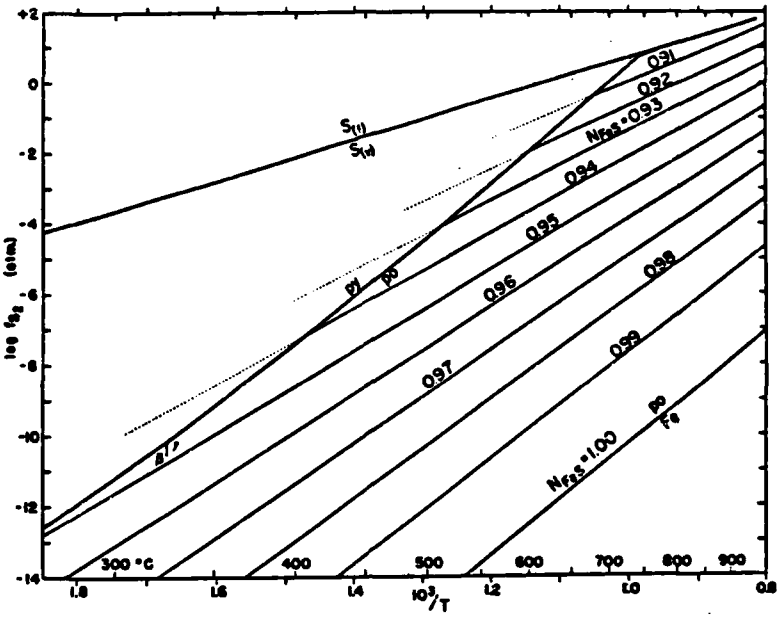

FIGURE 8 Composition of pyrrhotite in the system S-Fe as a temperature and fugacity of (S_2)

(given by P.TOULMIN and P.B.BARTON,Jr (7))

py = pyrite

po = pyrrhotite

Fe = iron

(see page 10)

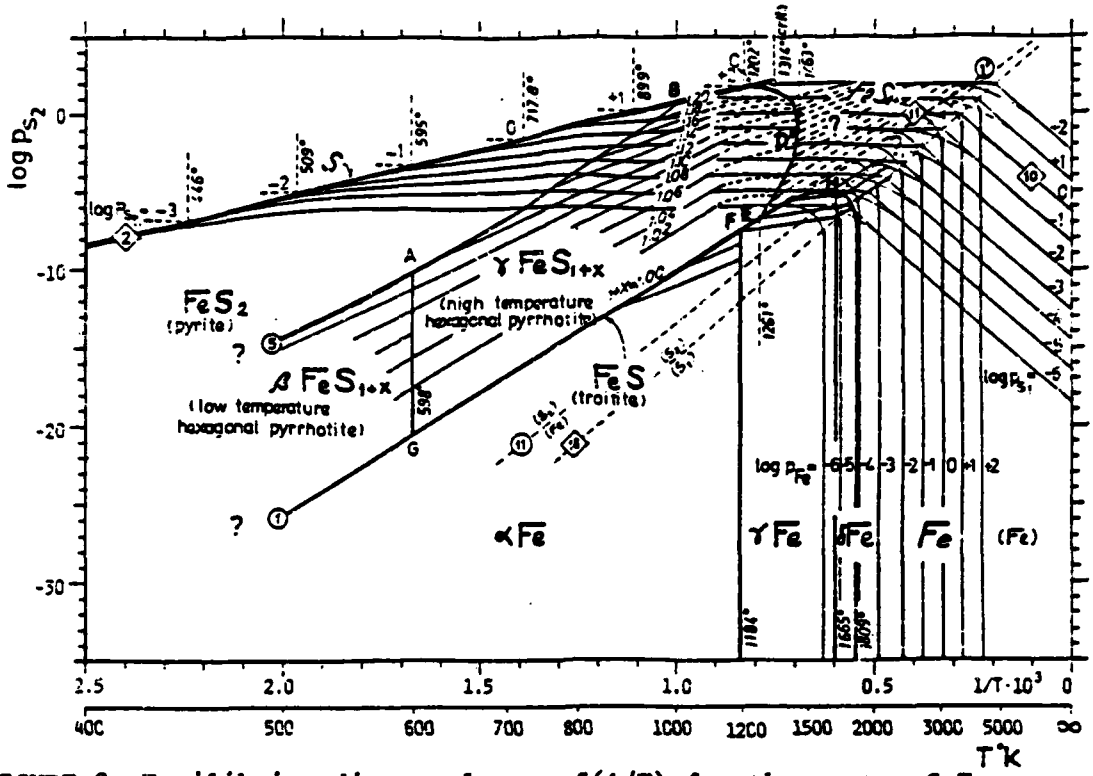

FIGURE 9 Equilibrium diagram log p_{S_2}=f(1/T) for the system S-Fe (revised version of figure 6)

(see page 11 !)

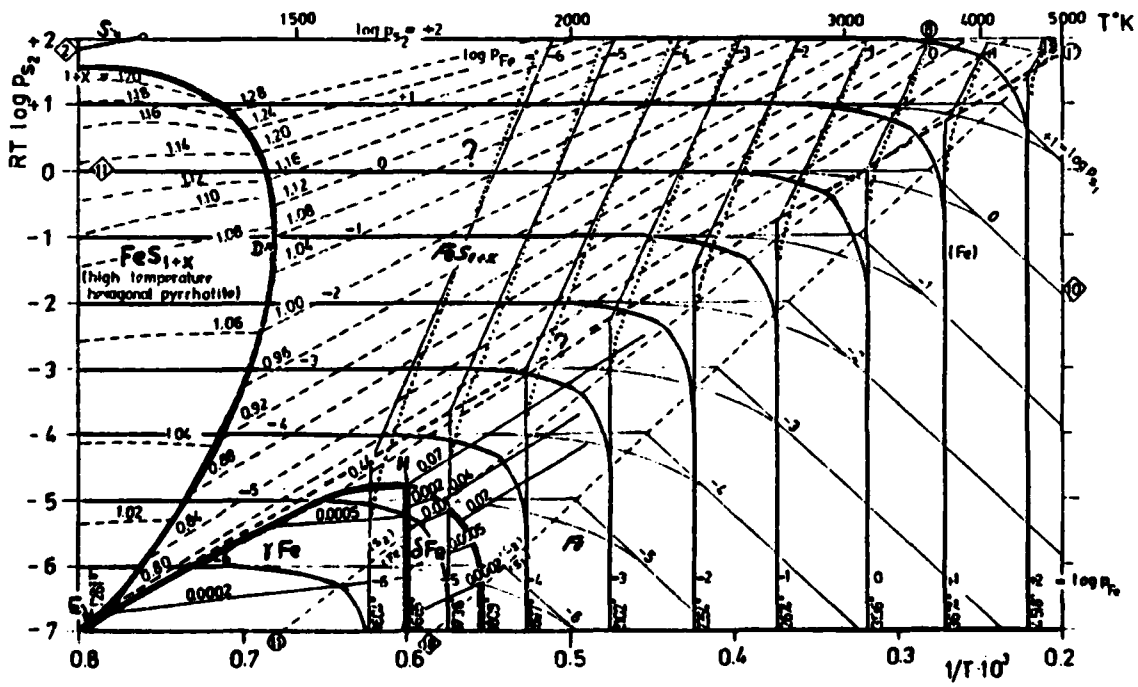

FIGURE 10 Equilibrium diagram log p_{S_2} = f(1/T) for the system S-Fe (revised version of figure 7)

(see page 11)

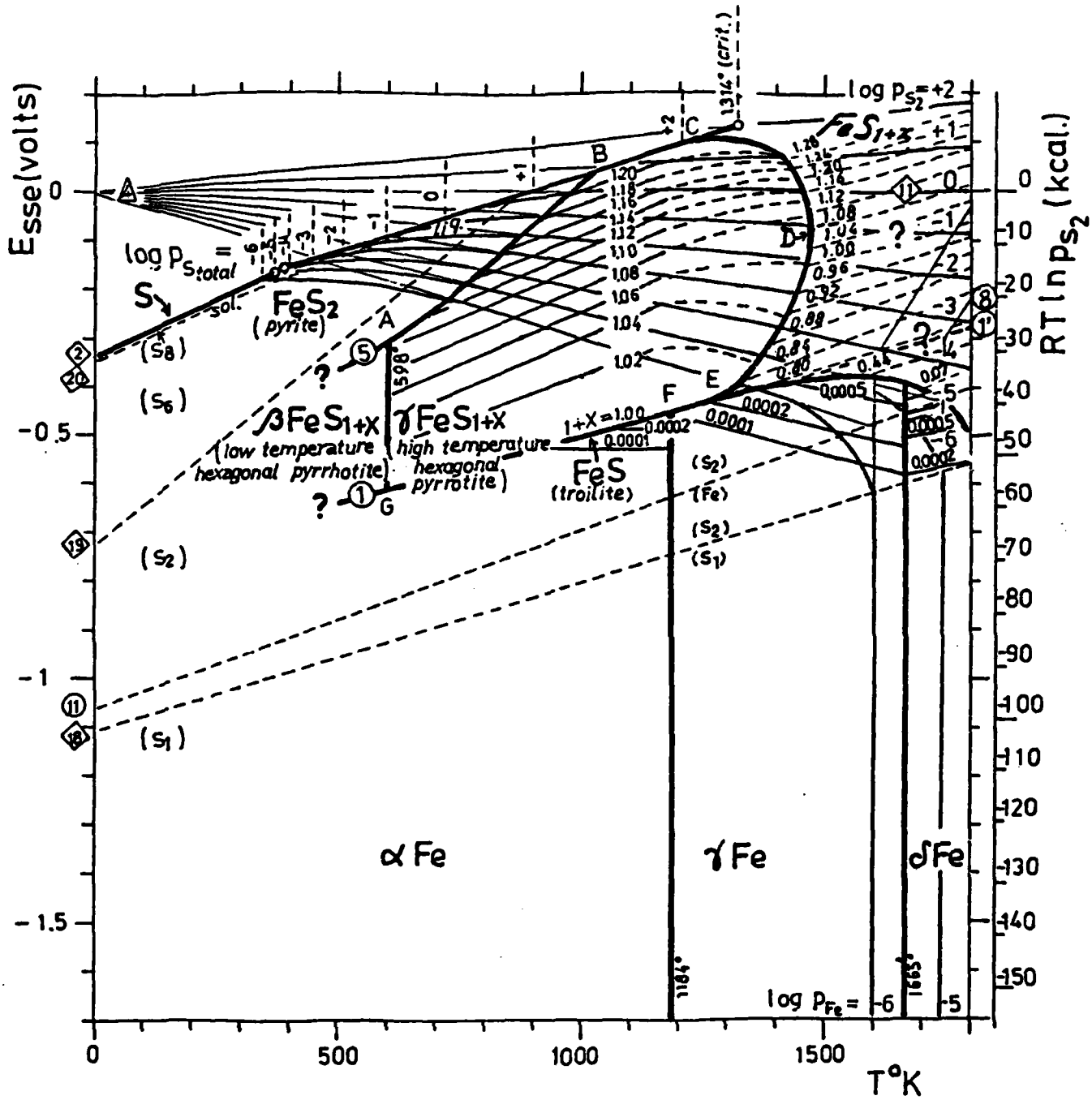

FIGURE 11 Equilibrium diagram E_{sse} = f(T) for the system S-Fe

(see page 11)

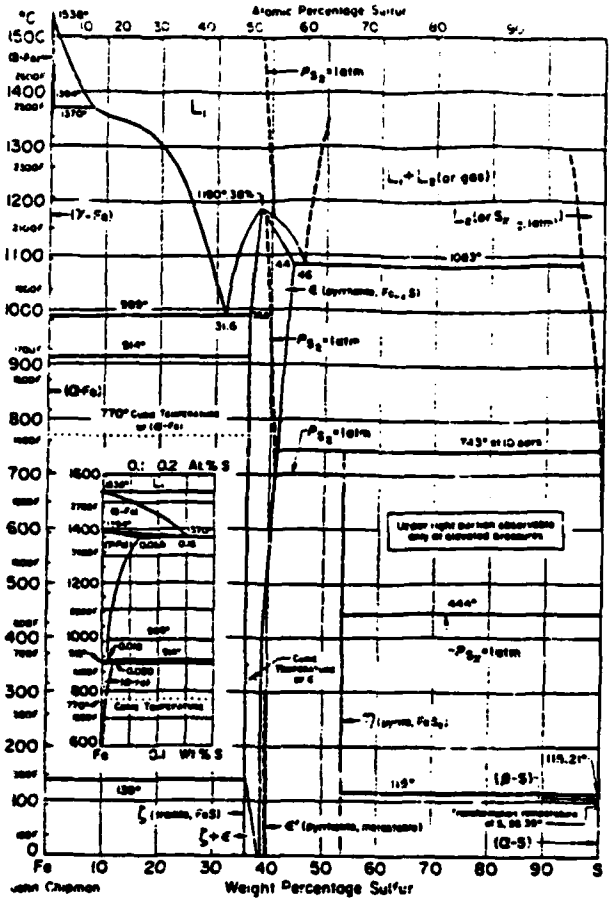

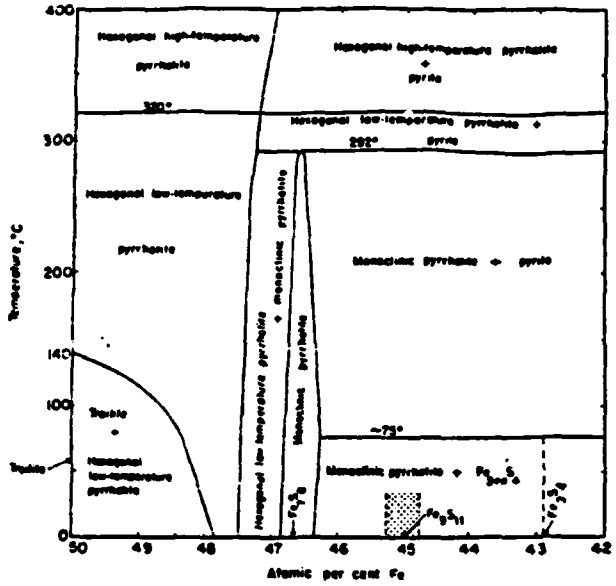

12a. After John CHIPMAN

12b. A protion of the S-Fe system at low temperatures, modified after TAYLOR (1970)

FIGURE 12 Phase diagram of iron sulphur system

(see page 18)

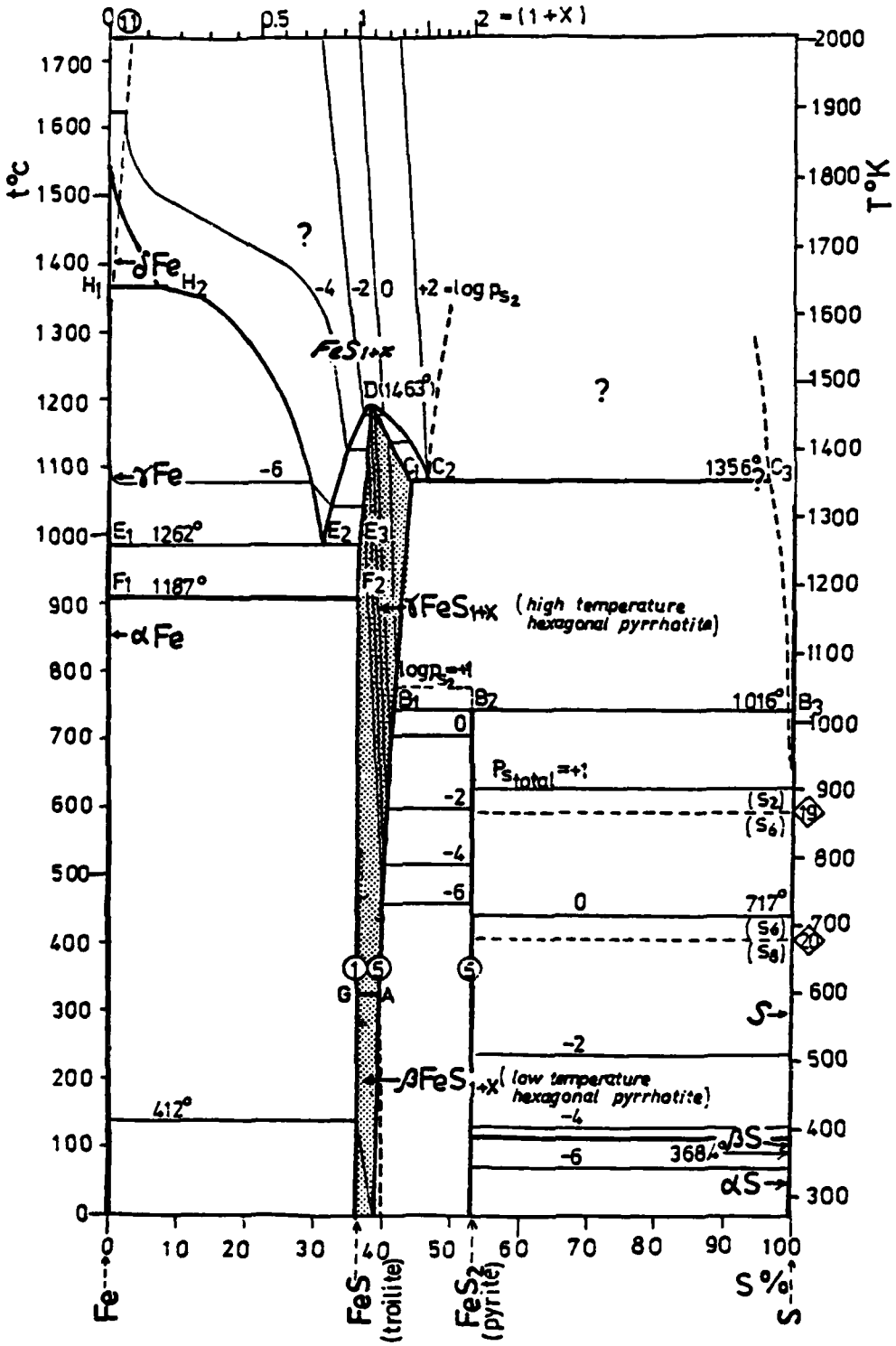

FIGURE 13 Equilibrium diagram T = f(composition) for the system S-Fe (revision of figure 12a)

(see page 18)

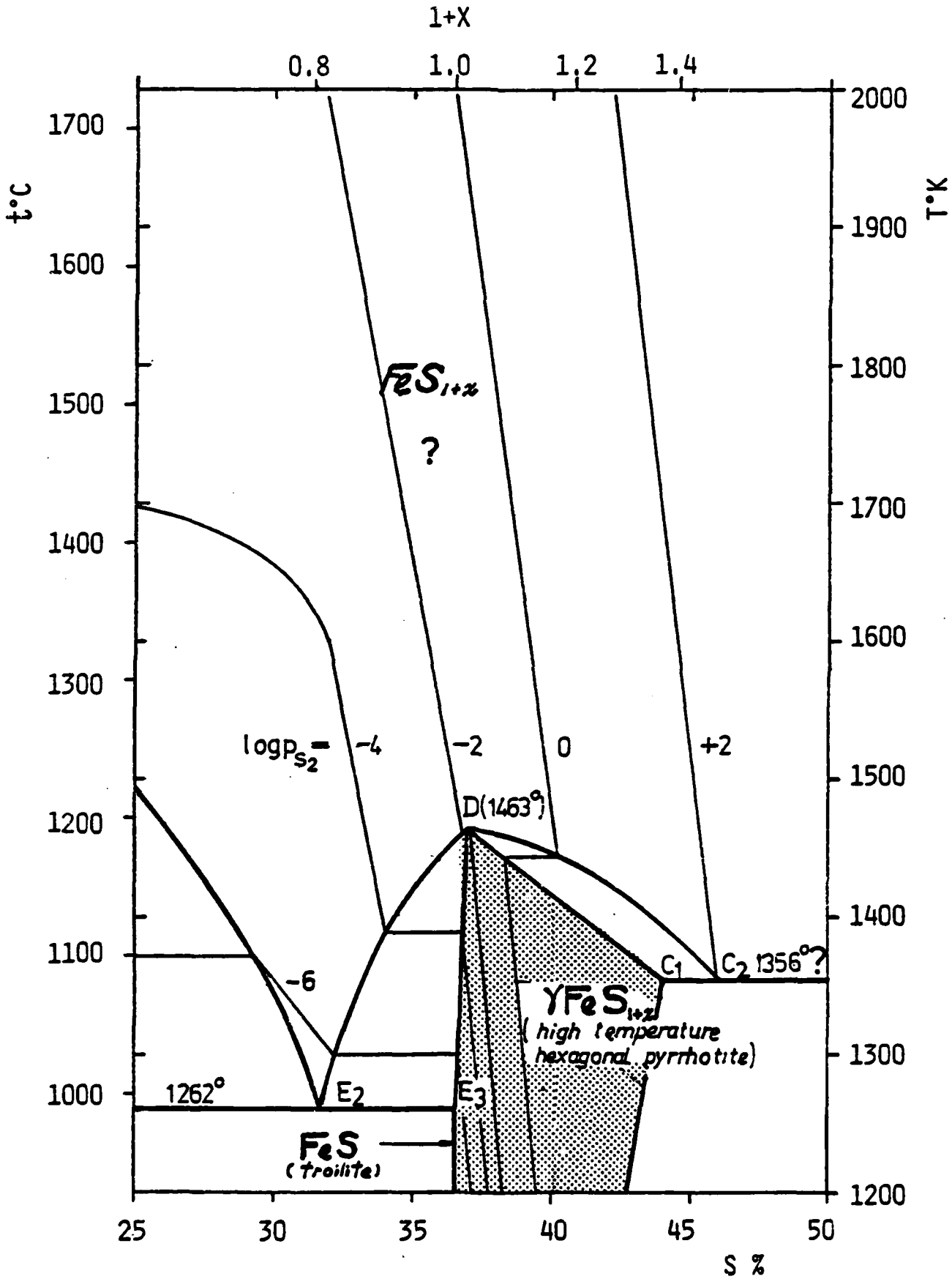

FIGURE 14 Equilibrium diagram T = f(composition) for the system S-Fe (an enlargement diagram of part of figure 13)

(see page 18)

ZHM. MP. 2621
ZHM

November 1984

RT. 284
E. 189

CHEMICAL AND ELECTROCHEMICAL EQUILIBRIA IN THE PRESENCE OF A GASEOUS PHASE

O-S-Fe

13. OXYGEN-SULPHUR-IRON *

by

YANG Xizhen **, ZHANG Xeming **, ZHANG ZHongcheng ***
and Marcel POURBAIX ***

** Shandong University of Applied Sciences, Jinan , China

*** Belgian Center for Corrosion Study , CEBELCOR, Brussels, Belgium

SUMMARY

pages

1 SUBSTANCES CONSIDERED AND NOT CONSIDERED 3

2 EQUILIBRIUM TEMPERATURES AND EQUILIBRIUM ELECTRODE POTENTIALS OF THE CONSIDERED SUBSTANCES. ENTHALPIES OF TRANSFORMATION 4

3 THERMODYNAMIC DATA

3.1 Standard chemical potentials μ° (or standard free enthalpies of formation ΔG_f°) 5

3.2 Reactions and equilibria considered. Formulation of the standard free enthalpies of reaction ΔG_r° 6

3.3 Values of the standard free enthalpies of reaction ΔG_r°, of the standard equilibrium electrode potentials E_{soe}°, and of the equilibrium gaseous pressures 8

4 EQUILIBRIUM DIAGRAMS AND THEIR INTERPRETATION 9

4.1 The stability and decomposition of $Fe_2(SO_4)_3$ 10

4.2 The stability and decomposition of $FeSO_4$ 12

---

* The present work is a continuation of similar work relating to systems O, H, O-Fe , O-H, O-H-Fe, C, O-C, O-C-Fe, S, O-S and S-Fe (see ref. (1) (p. 17))

pages

4.3 Ferric oxide as a catalyst for the oxidation of (SO_2) to (SO_3) 13

4.4 The high temperature corrosion of iron in gaseous atmospheres containing oxygen- and sulphur derivates .. 13

ACKNOWLEDGEMENTS 15

BIBLIOGRAPHY 16

INDEX OF TABLES 19

INDEX OF FIGURES 41

1 SUBSTANCES CONSIDERED

	Considered	not considered*
Solid substances		
System O	O_2, O_3	
System S	$\alpha,\beta S$	
System Fe	$\alpha,\gamma,\delta Fe$	
System O-Fe	$Fe_{1-x}O$ (wüstite)	FeO, $Fe_{0.947}O$
	αFe_2O_3 (hematite)	
	βFe_2O_3 (akaganeite)	
	$\alpha,\beta Fe_3O_4$ (magnetite)	
	$Fe_{3-\gamma}O_4$ (non-stoichiometric magnetite)	
System O-S	SO_2, αSO_3	βSO_3, γSO_3
System S-Fe	$\alpha,\beta,\gamma FeS$ (troilite)	Fe_2S_3,
	$\beta,\gamma\ FeS_{1.140}$ (pyrrhotite)	FeS_2 (marcasite)
	$\beta,\gamma\ FeS_{1+x}$ (pyrrhotite)	
	FeS_2 (pyrite)	
System O-S-Fe	$FeSO_4$, $Fe_2(SO_4)_3$	
Liquid substances		
System O	O_2	O_3
System S	S	
System Fe	Fe	
System O-Fe	$Fe_{1-x}O$, $Fe_{3-y}O_4$, Fe_2O_3	FeO, $Fe_{0.947}O$
System S-Fe	FeS, FeS_{1+x}	

* Some of these substances have been considered in previous reports (1.1 to 1.12), and omitted in the present work.

	considered	not considered
Gaseous substances		
System O	(O_1), (O_2), (O_3)	
System S	(S_1), (S_2), (S_6), (S_8)	(S_3), (S_4), (S_5), (S_7)
System Fe	(Fe)	
System O-Fe		(FeO)
System O-S	(S_2O), (SO), (SO_2), (SO_3)	(S_2O_2), (S_2O_3), (S_2O_7), (S_2O)
System S-Fe		(FeS)

2. EQUILIBRIUM TEMPERATURES AND EQUILIBRIUM ELECTRODE POTENTIALS OF THE CONSIDERED SUBSTANCES. ENTHALPIES OF TRANSFORMATION.

		Equilibrium temperatures T(°K)	Equilibrium electrode potentials E	Enthalpies of transformation ΔH(cal./mole)
System O	O_2 / $O_{2,l}$	54.7	- 7.48 mv^{*}_{soe}	+ 106.3
System S	αS / βS	368.3	- 178.62 mv^{**}_{sse}	+ 95.7
	βS / S_l	388.4	- 170.72 mv^{**}_{sse}	+ 412.8
System Fe	αFe/ γFe	1184	—	+ 215
	γFe/ δFe	1665	—	+ 200
	δFe/ Fe_l	1809	—	+3300
System O-Fe	triple points***			
A. αFe/ $Fe_{1-x}O$/ Fe_3O_4		843	- 1086 mv_{soe}	—
B. αFe/ γFe / $Fe_{1-x}O$		1184	- 971 "	—
C. γFe/ $Fe_{1-x}O$/ $Fe_{1-x}O_l$		1644	- 818 "	—
D. γFe/ δFe / $Fe_{1-x}O_l$		1665	- 812 "	—
E. δFe/ Fe_l / $Fe_{1-x}O_l$		1801	- 773 "	—
F. $Fe_{1-x}O$/$Fe_{1-x}O_l$/Fe_3O_4		1697	- 526 "	—

* This value results of formulae $\mu^{\circ}_{O_2}$ =-1864 + 21.464T (10-54.7°K)
and $\mu^{\circ}_{O_{2,l}}$ =-1758 + 19.520T (54.7-110°K)
(see ref.(1.5),p.90)

** These values result of formula $\mu^{\circ}_{S_{S,l}}$ =-14915+ 18.129T (298-500°K)
(see ref.(1.10),P. 22)

*** See ref.(1.4 , p. 47.b)

		Equilibrium temperature T(°K)	Equilibrium electrode potentials E	Enthalpies of transformation ΔH(cal./mole)
System O-Fe	triple points			
G.	$Fe_{1-X}O_l$ / Fe_3O_4 / $Fe_{3-Y}O_{4_l}$	1870	- 363 mv_{soe}	—
H.	Fe_3O_4 / $Fe_{3-Y}O_4$ / $Fe_{3-Y}O_{4_l}$	1870	- 131 "	—
J.	$Fe_{3-Y}O_4$ / $Fe_{3-Y}O_{4_l}$ / Fe_2O_3	1825	+ 62 "	—
K.	$Fe_{3-Y}O_{4_l}$ / Fe_2O_3 / $Fe_2O_{3_l}$	1856	+ 98 "	—
L.	Fe_3O_4 / $Fe_{3-Y}O_4$ / Fe_2O_3	998	- 528 "	—
System O-S	SO_2 / $SO_{2,l}$	200.5	- 791.1"* **	+ 1769
	αSO_3 / $SO_{3,l}$	335	- 376.5"	+ 6090
System S-Fe	triple points			
A.	FeS_2 / βFeS_{1+X} / γFeS_{1+X}	598	- 310 mv_{sse} ***	—
B.	FeS_2 / S_l / γFeS_{1+X}	1020?	+ 40 " ***	—
C.	γFeS_{1+X} / S_l / FeS_{1+X_l}	1210?	+ 100 " ***	—
E.	γFeS_{1+X} / γFe / FeS_{1+X_l}	1261	- 430 " ***	—
F.	γFeS / αFe / γFe	1184	- 450 " ***	—
G.	βFeS / γFeS / αFe	598	- 610 " ***	—
H.	γFe / δFe / FeS_{1+X_l}	1665	- 410 " ***	—

3. THERMODYNAMIC DATA

3.1 Standard chemical potentials μ° (or standard free enthalpies of formation ΔG_f°) (tables I and II)

Tables I.1, I.2 and I.3 (pages 21 - 23) give , for different temperatures from zero till 6000°K , values of standard chemical potentials admitted for the substances considered in the present work. The values relating to substances of the one-component systems O,Fe,S and of the two-components systems O-Fe, O-S and Fe-S (columns A to I and L to Y) are those already admitted in previous reports of these series

---

* This value results of formula $E^\circ_{soe,SO_{2S.1}}$ =- 837.4 + 0.231T (200-298°K) (see ref.1.11, p.47)

** This value results of formula (make some slight extrapolation):

$E^\circ_{soe,SO_{3S.1}}$ =- 729.6 + 1.054T (200-298°K) (see ref.1.11,p.47)

***These values are given by a graphical method according to figure 11 of system S-Fe (ref.(1.12), p. 45).

(ref. 1.1, 1.3, 1.4, 1.10, 1.11 and 1.12). The values given in columns J and K for condensed $FeSO_4$ and $Fe_2(SO_4)_3$ are given by the JANAF tables (ref.(2)).

Tables II.1, II.2 and II.3 (pages 24 - 27) give some simplified formulae of the type $\mu^\circ = A + BT$ (relating to given temperature ranges) for the approximate calculation of the influence of temperature on the standard chemical potentials of the considered substances.

3.2 Reactions and equilibria considered. Formulation of the standard free enthalpies of reaction ΔG_r°

Tables III.1 and III.2 (pages 28 - 31) give a list of 48 reactions and formulae which refer successively to the one component systems oxygen (where we shall consider 3 reactions with the mark Δ) and sulphur (where we shall consider 8 reactions with the mark $\Diamond$), to the two components systems oxygen-sulphur (where we shall consider 12 reactions with the mark $\square$), oxygen -iron (where we shall consider 6 reactions with the mark ∇) and sulphur -iron (where we shall consider 7 reactions with the mark $\Box$), and to the three components systems oxygen-sulphur - iron (where we shall consider 12 reactions with the mark $\bigcirc$).

The formulae given in the third column of tables III.1 and III.2 give, for every of the considered reactions, the standard free enthalpy of reaction ΔG_r° as a function of the standard chemical potentials μ° of the considered reactants. The fourth column of these tables gives the formulae for the calculation of the free enthalpies of reaction ΔG_r as a function of their standard values ΔG_r° and of the partial pressures (or better fugacities) of the considered gaseous reactants.

For instance:

- for reaction 1 $(O_2) = O_{2\ S.1}$

$$\Delta G_r + RT \ln p_{O_2} = \Delta G_r^\circ$$

and the equilibrium condition is

$$RT \ln p_{O_2} = \Delta G_r^\circ$$

or $\ln p_{O_2} = \Delta G_r^\circ / RT$

or $\log p_{O_2} = \Delta G_r^\circ / 4.5756T$

- for reaction 18 $2(S_1) + (S_2) = 2\ (S_2)$

$$\Delta G_r + RT \ln p_{S_2} = \Delta G_r^\circ + 2\ RT \ln (p_{S_2}/p_{S_1})$$

and the equilibrium condition is

$$RT \ln p_{S_2} = \Delta G_r^\circ + 2\ RT \ln (p_{S_2}/p_{S_1})$$

or $\ln p_{S_2} = \Delta G_r^\circ /RT + 2 \ln(p_{S_2}/p_{S_1})$

or $\log p_{S_2} = \Delta G_r^\circ /4.5756T + 2 \log (p_{S_2}/p_{S_1})$

- for reaction 15 $2(SO) + (O_2) = 2\ (SO_2)$

$$\Delta G_r + RT \ln p_{O_2} = \Delta G_r^\circ + 2\ RT \ln (p_{SO_2}/p_{SO})$$

and the equilibrium condition is

$$RT \ln p_{O_2} = \Delta G_r^\circ + 2\ RT \ln (p_{SO_2}/p_{SO})$$

or $\ln p_{O_2} = \Delta G_r^\circ /RT + 2 \ln (p_{SO_2}/p_{SO})$

or $\log p_{O_2} = \Delta G_r^\circ /4.5756T + 2 \log(p_{SO_2}/p_{SO})$

- for reaction 2 $0.667\ Fe_2O_3 + 2\ (SO_2) + (O_2) = 0.667\ Fe_2(SO_4)_3$

$$\Delta G_r + RT \ln p_{O_2} = \Delta G_r^\circ - 2\ RT \ln p_{SO_2}$$

and the equilibrium condition is

$$RT \ln p_{O_2} = \Delta G_r^\circ - 2\ RT \ln p_{SO_2}$$

or $\ln p_{O_2} = \Delta G_r^\circ /RT - 2 \ln p_{SO_2}$

or $\log p_{O_2} = \Delta G_r^\circ /4.5756T - 2 \log p_{SO_2}$

3.3 Values of the standard free enthalpies of reaction ΔG_r°, of the standard equilibrium electrode potentials E_{soe}°, and of the equilibrium gaseous pressures.

Tables IV.1 to IV.4 (pages 32 - 35) give, for the 12 reactions relating to system O-S-Fe which have been mentioned in tableIII.2 (page 30), the values of the standard free enthalpies of reaction ΔG_r° (calories per molar group), for given temperatures from zero to 6000°K. These data have been obtained by introducing in the formulae given in the third column of table III.2 (page 30) the values of standard chemical potentials μ° given in table I (pages 21 - 23).

These tables IV.1 to VI.4 also give, for the 11 reactions involving gaseous oxygen (O_2), i.e. for all reactions given in the lower part of table III.2 except that numbered 1, the values of the standard equilibrium electrode potentials E_{soe}° versus the standard oxygen electrode (under 1 atm. oxygen pressure at the considered temperature) and the corresponding values of the decimal logarithms of the equilibrium oxygen pressure $\log p_{O_2}$ (atm.). These values have been deduced from the values of ΔG_r° given in these tables IV.1 to IV.4 by the following formulae:

$$E_{soe}^\circ(\text{mv}) = \frac{\Delta G_r^\circ}{92.242}$$

$$\log p_{O_2}(\text{atm}) = \frac{\Delta G_r^\circ}{4.5756T}$$

This table IV.1 gives, for the reaction 1 which does not involve gaseous (O_2) and which involves gaseous (SO_3), the decimal logarithm of the equilibrium pressure of gaseous (SO_3). These values have been obtained by introducing in the formulae given in column 4 of table III.2 the values of ΔG_r° already given in table IV.1.

Tables V.1 and V.2 (pages 36 - 39) give, for several temperature ranges , approximate formulae for the calculation of the influence of temperature on the equilibrium conditions of 12 reactions relating to system O-S-Fe considered in table III.2 (page 30). Columns 1 (RT ln p_{O_2}) and 2(E_{soe}) relate only to reactions involving gaseous oxygen. Column 3 (log p) relates to all reactions . These formulae have been obtained by introducing in the formulae given in column 4 of table III.2 (page 30), the values of ΔG_r° given in table IV (pages 32-35).

4. EQUILIBRIUM DIAGRAMS AND THEIR INTERPRETATION

Figure 1 shows, for the temperature range from zero to 1800°K and for the electrode potentials from -1.70 to +0.20 $volt_{soe}$, the stable equilibria of system O-Fe (ref.(1.4), Fig. 14, p.47c). Solid α,γ Fe , non-stoichiometric ferrous oxides $Fe_{1-x}O$ (wüstite), α,β Fe_3O_4 (magnetite), non-stoichiometric magnetite $Fe_{3-y}O_4$, αFe_2O_3 (hematite), βFe_2O_3 (akaganeite) , as well as gaseous (Fe) , appear on this figure 1 . We have kept for the lines drawn in this figure the numbers with which they already appeared in a previous report on system O-Fe(ref.(1.4)) and we have written these numbers inside a triangle: ▽10 , ▽12 .....

Figure 2 shows the stable equilibria of system O-S (ref.(1.11), Fig.2, p. 72) with the same coordinates as figure 1, for different gaseous pressures from 10^{-6} to 1 atm. Condensed S , SO_2 , SO_3 and gaseous species (S_8), (S_6), (S_2), (SO_2) and (SO_3) appear on this figure 2. We have kept for the lines drawn in this figure the numbers with which they already appeared in a previous report on system O-S (ref.(1.11)), and we have written these numbers inside a square [1] , [2] .....

Figure 3 is the equilibrium diagram E = f(T) for the system S-Fe (temperature from zero to 1800°K, E from -1.70 to +0.20 $volt_{sse}$). This figure was drawn according to P.TOULMIN's and P.B.Jr.BARTON's work(ref.(5)) and to T.ROSENQVIST's work on the equilibria of system $Fe/H_2S/H_2$ (ref.(6)), and with the use of an equilibrium diagram for system S-H drawn in 1939 by M. POURBAIX (ref.(7)).(see ref.(1.12), p.41). It shows notably the stability of FeS_2,pyrite(between lines 2 and 5),of FeS_{1+x} , ryrrhotite (between lines 5 BCDEF and 1) ,of FeS, troilite(along line 1),and of Fe(below line 1,EH), as well as of gaseous (S_8), (S_6), (S_2), (S_1) and (Fe). We have kept for the lines drawn in this figure the numbers with which they already appeared in a previous report on system S-Fe (ref.(1.12)), and we have written these numbers inside a parallelogram : 1 , 5.....
We have not found in the literature thermodynamic data nor sufficient experimental information relating to the form of pyrrhotite stable below about 500°K ; so we have put some question-marks on this figure.

Figure 4 shows the stable equilibria relating to the three components system O-S-Fe in the presence of gaseous atmospheres containing sulphur derivates ((SO_3), (SO_2), (S_8), (S_6) and (S_2)) under 7 different pressures (from 10^{-6} to 1 atm.). This figure has been obtained by superposition of figure 1 (which relates to system O-Fe) and of figure 2 (which relates to system O-S), with addition of data shown at figure 3 (which relates to system S-Fe) as well as of data concerning the stability conditions of the three components substances $Fe_2(SO_4)_3$ and $FeSO_4$.

4.1 The stability and decomposition of $Fe_2(SO_4)_3$

At figure 4 , one sees that ferric sulphate $Fe_2(SO_4)_3$ is thermodynamically stable in the presence of gaseous mixtures of (SO_3),(SO_2) and (S_8) on the left - hand side of the lines of

families ①, ②,⑤ and ⑨ corresponding to the existing pressure. This is shown more clearly at the simplified figures 6.a to 6.d, which relate respectively to a pressure of 10^{-6}, 10^{-4}, 10^{-2} and 1 atm. In this left-hand side area, Fe_2O_3 may not co-exist with gaseous (SO_3) and / or (SO_2) and may be transformed into $Fe_2(SO_4)_3$.

Figure 4 also shows that, under 1 atm. pressure, $Fe_2(SO_4)_3$ may, above -0.20 $volt_{soe}$, be decomposed with formation of Fe_2O_3 and (SO_3) or (SO_2) (reactions ① and ②) when heated above 900° to 1055°K (627° to 782°C). Between about -0.20 and -0.87 $volt_{soe}$, it may be reduced with formation of $FeSO_4$ and (SO_2) above about 230° to 900°K (-43° to 627°C). Below -0.87 $volt_{soe}$, it may theoretically be reduced with formation of FeS_2 and (S_8), as well as of elementary S.

According to formulae given in section 1 of table V.1 (see page 37), the thermal decomposition of $Fe_2(SO_4)_3$ according to reaction

$$Fe_2(SO_4)_3 = Fe_2O_3 + 3\,(SO_3) \quad ①$$

Proceeds above 640°K (367°C) with evolution of (SO_3) under the following partial pressures:

$\log p_{SO_3}$	-6	-5	-4	-3	-2	-1	0
T(°K)	640	685	736	796	866	950	1055
$1/T \times 10^3$	1.563	1.460	1 .358	1.256	1.155	1.052	0.948

These data allow to draw at figure 4 the family of vertical isobar lines ①.

In fact this reaction was used by N.LEMERY, for preparing sulphur trioxide by distillation of ferric sulphate (ref.(4), p.339).

4.2 The stability and decomposition of $FeSO_4$

Ferrous sulphate, $FeSO_4$, is the most important iron(II) sulphate. It is used for preparing other iron compounds, other sulphates, and in water treatment for avoiding the pitting corrosion of copper and copper alloys.

At figure 4 one sees that, in the presence of gaseous mixtures of (SO_3), (SO_2) and (S_8), ferrous sulphate is thermodynamically stable in the triangular area between lines 5, 3, 6 and 10. Under 1 atm., above line 5 of index zero, it may be oxidized into ferric sulphate, $Fe_2(SO_4)_3$, and, below lines 3, 6, 10 of index zero, it may be transformed into Fe_2O_3 or FeS_2. Ferrous sulphate decomposes with formation of Fe_2O_3 and (SO_2) from about 415°K (142°C) to 670°K (397°C) under 10^{-6} to 1 atm.

In practice, the mechanism of the decomposition of $Fe_2(SO_4)_3$ or $FeSO_4$ might be more complicate than that we have just said above. Some basic sulphates, such as $Fe_2O_2(SO_4)$, are formed in these processes (ref.(3), pp.256-257 and pp.310-311). Those cases have not been considered in the present study.

4.3 Ferric oxide as a catalyst for the oxidation of (SO_2) to (SO_3)

One sees at figures 5 a and 5 b (which is an enlargement of part of figure 5 a) that, in the presence of a gas containing 5 to 15% (O_2) and 15 to 5% $(SO_2)+(SO_3)$, under atmospheric pressure (log p= -1.3 to -0.8 for both gases), (see the shaded area), Fe_2O_3 is stable or unstable according to the temperature is higher or lower than about 905°K(632°C) to 947°K(674°C). Assuming that ferric oxide may act as a catalyst only when Fe_2O_3 and $Fe_2(SO_4)_3$ may be simultaneously locally stable in the gaseous atmosphere,these figures lead to the conclusion that Fe_2O_3 might be a catalyst for the oxidation of (SO_2) to (SO_3) only above the here mentioned temperature range. And this is in agreement with results shown in our previous work (see ref.(1.11), figure 10 p. 81). The catalytic action of Fe_2O_3 is then due to the following sequence of reactions:

$$Fe_2O_3 + 3\,(SO_2) + 3/2\,(O_2) = Fe_2(SO_4)_3 \quad \text{reaction ②}$$
$$Fe_2(SO_4)_3 = Fe_2O_3 + 3(SO_3) \quad \text{reaction ①}$$

i.e. globally: $3\,(SO_2) + 3/2\,(O_2) = 3\,(SO_3)$

Such a mechanism has been reported by ref.(4)(p.338).

4.4 The high temperature corrosion of iron in gaseous atmospheres containing oxygen- and sulphur derivates

Coming back to the possible application of these diagrams to the study of corrosion phenomena, we shall take the risk of making some predictions in an area where we did not yet have the opportunity to look extensively to the literature, nor to make any experimental work: the high temperature corrosion of metals in the presence of gaseous atmospheres containing oxygen- and sulphur derivates.

We shall assume that the corrosion behavior of

the metal very much differs according to its stable form in the existing conditions (of temperature, composition of the gaseous phase , and pressure) is the metal itself or a solid non volatile oxide (in this case corrosion is probably often not to be expected), or a salt (in this case corrosion is probably often to be expected if the temperature is high enough for allowing the formation of this salt).

In figure 6 a, which is a simplified version of the equilibrium diagram of the three components system O-S-Fe already shown in figure 4, the isobar line marked -6 relates to gaseous atmospheres where the total pressure of sulphur compounds ($(SO_3)+(SO_2)+$ gaseous sulphur (S_8) to (S_2)) is 10^{-6} atm. (i.e. for instance 2.8 mg (SO_2) per cubic meter at 0°C and 1 atm.). This isobar line separates (on its left side) a region where the stable form of iron is , according to decreasing values of the oxygen electrode potential E_{soe}, successively the salts $Fe_2(SO_4)_3$, $FeSO_4$, FeS_2 and FeS_{1+X}, from a region (on its right side), where its stable form is an oxide (Fe_2O_3, Fe_3O_4, $Fe_{1-X}O$) or the metal itself. These two regions are shown at figure 6 a respectively as a shaded and a not shaded area , which would , if the assumption we have just made is correct, correspond respectively to a corrosion area and to a non-corrosion area (at high temperatures). The three other diagrams drawn at figure 6 have the same significance, for pressures in total sulphur derivates equal respectively to 10^{-4}, 10^{-2} and 1 atm.

We recall that figures 6 a to 6 d(which result of the three components equilibrium diagram for system O-S-Fe) might be valid for the behavior of iron in atmospheres containing only oxygen- and sulphur derivates. For atmospheres containing also hydrogen derivates, such as (H_2O) and (H_2S), figure 6 should be replaced by other figures, which should result from the equilibrium diagram for the four components system O-H-S-Fe, which has not yet been set- up.

It is likely that, in case figures 5 and 6 would prove to be useful, the setting up of similar diagrams relating to other metals (for instance Al, Co, Cr, Mo, Ni, Si, Ti, Zr, W) would also be useful.

ACKNOWLEDGEMENTS

This work was performed under sponsorship of Detachment 1, Air Force Office of Scientific Research, United States Air Force, under Grant AFOSR-84-0141.

We express our thanks to Antoine POURBAIX and Renée SCHERER who very kindly took care of the publication modalities.

BIBLIOGRAPHY

1. Chemical and Electrochemical Equilibria in the Presence of a Gaseous Phase

1.1 OXYGEN, by Marcel POURBAIX, CEBELCOR Rapports Techniques, 137, RT 250 (1979).

1.2 HYDROGEN, by Marcel POURBAIX, ibid, 137, RT 251 (1979)

1.3 IRON, by Marcel POURBAIX, ibid, 137, RT 252 (1979)

1.4 OXYGEN-IRON, by Marcel POURBAIX, ibid, 137, RT 253 (1979)(in french)

1.5 OXYGEN-HYDROGEN, by Marcel POURBAIX and YANG Xi-Zhen, ibid, 140, RT 260 (1981)

1.6 OXYGEN- HYDROGEN - IRON, by Marcel POURBAIX and YANG Xi-Zhen, ibid, 138, RT 256 (1980)

1.7 CARBON, by Marcel POURBAIX, YANG Xi-Zhen and ZHANG He-Ming, ibid, 144, RT 265 (1983)

1.8 OXYGEN-CARBON, by Marcel POURBAIX, YANG Xi-Zhen and ZHANG He-Ming, ibid, 144, RT 266 (1983)

1.9 CARBON-IRON and OXYGEN-CARBON-IRON, by Marcel POURBAIX, ibid, 146, RT 270 (1984)

1.10 SULPHUR, by YANG Xi-Zhen, ZHANG He-Ming, ZHANG Zhong Cheng and Marcel POURBAIX, ibid, 149, RT 281 (1984)

1.11 OXYGEN-SULPHUR, by ZHANG He-Ming, ZHANG Zhong-Cheng, YANG Xi-Zhen and Marcel POURBAIX, ibid, 149, RT 282 (1984)

1.12 SULPHUR-IRON, by ZHANG Zhong-Cheng, ZHANG He-Ming, YANG Xi-Zhen and Marcel POURBAIX, ibid, 150, RT 283 (1984)

2. D.R.STULL, H.PROPHET, et al., JANAF Thermodynamical Tables, 2nd Ed., NSRDS-NBS 37, U.S. Government Printing Office, Washington, D.C. (1971).

3. J.W.MELLOR, A Comprehensive Treatise on Inorganic and Theoretical Chemistry, vol. XIV, longmans, Green, (1942)

4. J.W.MELLOR, A Comprehensive Treatise on Inorganic and Theoretical Chemistry, vol. X, Longmans, Green, (1952)

5. P.TOULMIN and P.B.Jr.BARTON, A Thermodynamic Study of Pyrite and Pyrrhotite, Geochim. Cosmochim. Acta, 28, 641-671 (1964)

6. T.ROSENQVIST, A Thermodynamic Study of the Iron, Cobalt and Nickel Sulphides , Journal of the Iron and Steel Institute, 176, 37-57 (1954)

7. M.POURBAIX, Equilibres Chimiques de Systèmes Complexes Comportant une Phase Gazeuse. Méthode de Calcul et Représentation Graphique Internal Report P.391 (thesis Brussels),unpublished,(1939)

P. 18 blank

INDEX OF TABLES

pages

TABLE I Standard chemical potentials μ° (or standard free enthalpies of formation ΔG_f°) of the considered substances (calories·mole^{-1}) 21

I.1 Columns A to I 21

I.2 Columns J to Q 22

I.3 Columns R to Y 23

TABLE II Simplified formulae for the approximate calculation of the influence of temperature on the standard chemical potentials μ° of the considered substances 24

II.1 Columns A to K 24

II.2 Columns L to R 25

II.3 Columns S to Y 27

TABLE III Equilibria, reactions and formulae for the calculation of the equilibrium conditions 28

III.1 Reactions relating to systems O, S, O-S 28

III.2 Reactions relating to systems O-Fe, S-Fe and O-S-Fe 30

TABLE IV Standard equilibrium conditions of reactions relating to system O-S-Fe 32

-Standard free enthalpies of reaction ΔG_r° (calories per molar group)

-Standard equilibrium electrode potentials E_{soe}° (mv) (for reactions involving gaseous (O_2))

-Logarithms of the standard oxygen pressure log p_{O_2} (atm) (for reactions involving gaseous (O_2)), and logarithms of the equilibrium gaseous pressure log p(atm) (for reactions not involving gaseous (O_2))

IV.1 Reactions 1 to 3 32

IV.2 Reactions 4 to 6 33

IV.3 Reactions 7 to 9 34

IV.4 Reactions 10 to 12 35

pages

TABLE V Influence of temperature on the equilibrium conditions of the considered reactions 36
V.1 Reactions 1 to 7.....36
V.2 Reactions 8 to 12.....38

	Condensed substances								
	A	B	C	D	E	F	G	H	I
T°K	O_2(S.L)	O_3(S.L)	S(S.L)	SO_2(S.L)	SO_3(S.L)	Fe(S.L)	FeS(S.L)	FeS1.140	FeS_2
0	S. -1864		0	-79116	-109755	0	-24421	-28976	-40121
100	l. 194	-31314	0	-76047	-103649	0	-24371	-28968	-39848
200		-28750	0	S. -72978	-96908	0	-24356	-29019	-39120
298			0	l. -70886	-90053	0	-24368	-29123	-38256
300			α 0		S. -89908	0	-24368	-29125	-38239
400			γ l. 0		l. -84298	0	α -24400	-29238	-37246
500			0			0	β -24498	-29267	-35900
							β	β	
600			0			0	γ -24630	γ -29263	-34387
700			0			0	-24780	-29278	-32769
800			-1198			0	-26103	-30631	-33466
900			258			0	-24737	-28916	-28782
1000			1678			0	-23362	-27910	-24101
1100			3067			α 0	-21950	-25422	-19392
1200			4428			γ 0	-20523	-23641	-14680
1300			5763			0	-19096	-21861	-9977
1400			7076			0	-17693	-20108	-5302
1500			8368			0	-16508	-18390	
1600						γ 0	-15662	-16710	
1700						δ 0	-14820	-15072	
1800						δ 0	-13971	-13473	
1900						l. 0	-12938		
2000						0	-11888		
2500						0	-6595		
3000						0	-1230		
3500						9593	13554		
4000									
4500									
5000									
5500									
6000									

* This formula $FeS_{1.140}$ relates to a particular composition of the non-stoichiometric ferrous sulphide FeS_{1+x} (pyrrhotite) . The corresponding values of μ° are given by the relationship $\mu^\circ_{FeS_{1.140}} = 1.140 \times \mu^\circ_{Fe_{0.877}S}$.

TABLE I Standard chemical potentials μ° (or standard free enthalpies of formation ΔG°_r) of the considered substances(calories·mole^{-1}).

I.1 Columns A to I

(see page 5)

	Condensed substances				Gaseous substances			
	J	K	L	M	N	O	P	Q
T °K	FeSO4	Fe2(SO4)3	Fe3O4	Fe2O3	(O1)	(O2)	(O3)	(S1)
0	-219730		-266398	-195757	58984	0	34739	65663
100	-213311		-259592	-190611	57988	0	37573	62885
200	-205305		-251358	-184182	56728	0	37411	59706
298	-197176	-540882	-243191	-177719	55390	0	38997	56533
300	-197022	-540408	-243038	-177598	55364	0	39028	56473
400	-188668	-514624	-234820	-171081	53942	0	40684	53251
500	-180178	-488343	-226772	-164681	52480	0	42351	50189
600	-171685	-461962	-218926	-158409	50991	0	44015	47205
700	-163195	-435521	-211290	-152253	49481	0	45672	44268
800	-156037	-413004	-203874	-146206	47955	0	47321	40171
900	-146185	-382362	-196661	-140248	46418	0	48963	38757
1000	-136392	-351860	-189541	-134363	44870	0	50599	37334
1100	-126629	-321449	-182336	-128461	43314	0	52227	35904
1200	-116906	-291136	-175096	-122540	41751	0	53850	34469
1300	-107235	-260947	-167849	-116616	40181	0	55468	33028
1400	-97631	-230919	-160646	-110728	38607	0	57080	31585
1500	-88091	-201038	-153483	-104872	37027	0	58688	30137
1600	-78608	-171287	-146350	-99040	35444	0	60293	28687
1700	-69176	-141657	-139227	-93222	33857	0	61895	27234
1800	-59782	-112124	-132079	-87396	32267	0	63492	25779
1900	-50247	-82326	-124380	-81208	30673	0	65088	24323
2000	-40743	-52610	-116627	-74994	29078	0	66680	22865
2500			-77685	-43922	21068	0	74623	15554
3000			-38448		13023	0	82557	8217
3500					4959	0	90496	856
4000					-3119	0	98464	-6527
4500					-11206	0	106468	-13931
5000					-19300	0	114504	-21354
5500					-27399	0	122585	-28791
6000					-35502	0	130695	-36239

TABLE I Standard chemical potentials μ° (or standard free enthalpies of formation ΔG_r°) of the considered substances

I.2 Columns J to Q

(see page 5)

	Gaseous substances							
	R	S	T	U	V	W	X	Y
T°K	(S2)	(S6)	(S8)	(S20)	(SO)	(SO2)	(SO3)	(FE)
0	30636			-13016	1200	-70341	-93220	98740
100	26980			-15610	-786	-70966	-92205	95588
200	22923			-18240	-2953	-71425	-90555	91978
298	19027	12014	11169	-20665	-5030	-71741	-88689	88393
300	18955	11942	11094	-20709	-5069	-71746	-88652	88325
400	15131	8275	7348	-23011	-7109	-71947	-86597	84668
500	11702	5661	4972	-24899	-8943	-71923	-84310	81021
600	8479	3562	3255	-26589	-10677	-71790	-81919	77396
700	5387	1781	1941	-28099	-12321	-71562	-79441	73804
800	0	-6758	-8403	-32089	-15203	-72574	-78213	70248
900	0	665	2518	-30554	-15321	-70822	-74230	66736
1000	0	8029	13347	-29022	-15440	-69071	-70260	63279
1100	0	15347	24101	-27497	-15561	-67326	-66306	59898
1200	0	22623	34787	-25970	-15679	-65582	-62360	56578
1300	0	29856	45404	-24445	-15798	-63840	-58426	53303
1400	0	37051	55960	-22926	-15920	-62102	-54504	50052
1500	0	44213	66463	-21411	-16042	-60369	-50593	46823
1600	0	51344	76916	-19892	-16163	-58635	-46689	43617
1700	0	58443	87318	-18378	-16286	-56905	-42796	40438
1800	0	65518	97679	-16866	-16410	-55178	-38911	37293
1900	0	72563	107995	-15353	-16534	-53452	-35034	34341
2000	0	79583	118269	-13843	-16660	-51731	-31166	31435
2500	0			-6306	-17308	-43141	-11910	17284
3000	0			1224	-17990	-34575	7244	3647
3500	0			8753	-18708	-26026	26319	0
4000	0			16306	-19452	-17469	45368	0
4500	0			23871	-20226	-8908	64404	0
5000	0			31447	-21026	-345	83423	0
5500	0			39061	-21842	8237	102460	0
6000	0			46692	-22676	16823	121498	0

TABLE I Standard chemical potentials μ° (or standard free enthalpies of formation ΔG_r°) of the considered substances (calories·mole^{-1}).

I.3 Columns R to Y

(see page 5)

Condensed substances

A	O_2(S.L)	0 - 100	$\mu^{\circ}_{O_2}$	=	-1864	+	20.580 T
B	O_3(S.L)	100 - 200	$\mu^{\circ}_{O_3}$	=	-33878	+	25.640 T
		200 - 261		=	-33877	+	25.639 T
C	S(S.L)	0 - 718	μ°_{S}	=	0		
		800 - 1000		=	-12702	+	14.380 T
		1000 - 1314		=	-12919	+	14.197 T
		1314 - 1500		=	-9632	+	12.000 T
D	SO_2(S.L)	0 - 100	$\mu^{\circ}_{SO_2}$	=	-79116	+	30.690 T
		100 - 200		=	-79116	+	30.690 T
		200 - 201		=	-78978	+	30.000 T
		201 - 298		=	-77220	+	21.258 T
E	SO_3(S.L)	0 - 100	$\mu^{\circ}_{SO_3}$	=	-109755	+	61.060 T
		100 - 200		=	-110390	+	67.410 T
		200 - 290		=	-110388	+	67.400 T
		290 - 298		=	-119443	+	98.625 T
		298 - 491		=	-111657	+	72.497 T
F	Fe(S.L)	0 - 3000	μ°_{Fe}	=	0		
G	FeS(S.L)	0 - 100	μ°_{FeS}	=	-24421	+	.500 T
		100 - 200		=	-24386	+	.150 T
		200 - 298		=	-24331	+	-.122 T
		298 - 411		=	-24333	+	-.115 T
		411 - 500		=	-23840	+	-1.315 T
		500 - 598		=	-23839	+	-1.316 T
		598 - 1000		=	-26508	+	3.147 T
		1000 - 1463		=	-37111	+	13.749 T
		1463 - 2000		=	-30912	+	9.512 T
H	$Fe_{1.140}$	0 - 100	$\mu^{\circ}_{FeS_{1.140}}$	=	-28976	+	.080 T
		100 - 200		=	-28917	-	.510 T
		200 - 298		=	-28806	-	1.061 T
		298 - 500		=	-28910	-	.713 T
		500 - 598		=	-29226	-	.082 T
		598 - 1000		=	-31309	+	3.396 T
I	FeS_2	0 - 100	$\mu^{\circ}_{FeS_2}$	=	-40121	+	2.730 T
		100 - 200		=	-40376	+	7.280 T
		200 - 298		=	-40883	+	8.816 T
		298 - 500		=	-41731	+	11.663 T
		500 - 1000		=	-47699	+	23.398 T
J	$FeSO_4$	0 - 100	$\mu^{\circ}_{FeSO_4}$	=	-219730	+	64.190 T
		100 - 200		=	-221317	+	80.060 T
		200 - 298		=	-221894	+	82.949 T
		298 - 500		=	-222292	+	84.149 T
		500 - 1000		=	-223964	+	87.572 T
		1000 - 2000		=	-232041	+	95.649 T
K	$Fe_2(SO_4)_3$	298 - 500	$\mu^{\circ}_{Fe_2(SO_4)_3}$	=	-618390	+	260.094 T
		500 - 1000		=	-624826	+	272.966 T
		1000 - 2000		=	-651110	+	299.250 T

TABLE II Simplified formulae for the approximate calculation of the influence of temperature on the standard chemical potentials μ° of the considered substances

II.1 Columns A to K

L	Fe_3O_4	0 - 100	$\mu^{\circ}_{Fe_3O_4}$	=	-266398	+	68.060 T
		100 - 200		=	-267826	+	82.340 T
		200 - 298		=	-268025	+	83.337 T
		298 - 500		=	-267413	+	81.282 T
		500 - 900		=	-267012	+	80.480 T
		900 - 1000		=	-239931	+	50.390 T
		1000 - 1870		=	-260741	+	71.200 T
		1870 - 2000		=	-285396	+	84.385 T
		2000 - 3000		=	-272985	+	78.179 T
M	Fe_2O_3	0 - 100	$\mu^{\circ}_{Fe_2O_3}$	=	-195757	+	51.460 T
		100 - 200		=	-197040	+	64.290 T
		200 - 298		=	-197371	+	65.949 T
		298 - 500		=	-196953	+	64.545 T
		500 - 900		=	-196681	+	64.000 T
		900 - 1000		=	-181543	+	47.180 T
		1000 - 2000		=	-193732	+	59.369 T
		2000 - 2500		=	-199282	+	62.144 T
	Gaseous substances						
N	(O1)	0 - 100	$\mu^{\circ}_{(O_1)}$	=	58984	+	-9.960 T
		100 - 200		=	59248	+	-12.600 T
		200 - 298		=	59458	+	-13.653 T
		298 - 500		=	59682	+	-14.406 T
		500 - 1000		=	60090	+	-15.220 T
		1000 - 2000		=	60662	+	-15.792 T
		2000 - 5000		=	61330	+	-16.126 T
O	(O2)	0 - 5000	$\mu^{\circ}_{(O_2)}$	=	0		
P	(O3)	0 - 100	$\mu^{\circ}_{(O_3)}$	=	34739	+	28.340 T
		100 - 200		=	37735	+	-1.620 T
		200 - 298		=	34174	+	16.184 T
		298 - 500		=	34049	+	16.604 T
		500 - 1000		=	34103	+	16.496 T
		1000 - 2000		=	34518	+	16.081 T
		2000 - 5000		=	34797	+	15.941 T
Q	(S1)	0 - 100	$\mu^{\circ}_{(S_1)}$	=	65663	+	-27.780 T
		100 - 200		=	66064	+	-31.790 T
		200 - 298		=	66181	+	-32.378 T
		298 - 500		=	65891	+	-31.406 T
		500 - 1000		=	63044	+	-25.710 T
		1000 - 2000		=	51803	+	-14.469 T
		2000 - 5000		=	52344	+	-14.740 T
R	(S2)	0 - 100	$\mu^{\circ}_{(S_2)}$	=	30636	+	-36.360 T
		100 - 200		=	31037	+	-40.370 T
		200 - 298		=	30874	+	-39.755 T
		298 - 500		=	29833	+	-36.262 T
		500 - 718		=	28846	+	-34.289 T
		800 - 5000		=	0		

TABLE II Simplified formulae for the approximate calculation of the influence of temperature on the standard chemical potentials μ° of the considered substances

II.2 Columns L to R

(see page 5)

p. 26 blank

S	(S6)	298 - 500	$\mu^{\circ}(s_6)$	=	21386	+	-31.450 T
		500 - 1000		=	3293	+	4.736 T
		1000 - 2000		=	-63525	+	71.554 T
T	(S8)	298 - 500	$\mu^{\circ}(s_8)$	=	20311	+	-30.678 T
		500 - 1000		=	-3403	+	16.750 T
		1000 - 2000		=	-91575	+	104.922 T
U	(S2O)	0 - 100	$\mu^{\circ}(s_2o)$	=	-13016	+	-25.940 T
		100 - 200		=	-12980	+	-26.300 T
		200 - 298		=	-13291	+	-24.745 T
		298 - 500		=	-14418	+	-20.960 T
		500 - 1000		=	-20776	+	-8.246 T
		1000 - 2000		=	-44201	+	15.179 T
		2000 - 5000		=	-44036	+	15.097 T
V	(SO)	0 - 100	$\mu^{\circ}(so)$	=	1200	+	-19.860 T
		100 - 200		=	1381	+	-21.670 T
		200 - 298		=	1285	+	-21.194 T
		298 - 500		=	742	+	-19.371 T
		500 - 1000		=	-2446	+	-12.994 T
		1000 - 2000		=	-14220	+	-1.220 T
		2000 - 5000		=	-13749	+	-1.455 T
W	(SO2)	0 - 100	$\mu^{\circ}(so_2)$	=	-70341	+	-6.250 T
		100 - 200		=	-70507	+	-4.590 T
		200 - 298		=	-70780	+	-3.224 T
		298 - 500		=	-71472	+	-.901 T
		500 - 1000		=	-74775	+	5.704 T
		1000 - 2000		=	-86411	+	17.340 T
		2000 - 5000		=	-85988	+	17.129 T
X	(SO3)	0 - 100	$\mu^{\circ}(so_3)$	=	-93220	+	10.130 T
		100 - 200		=	-93855	+	16.500 T
		200 - 298		=	-94363	+	19.041 T
		298 - 500		=	-95149	+	21.678 T
		500 - 1000		=	-98360	+	28.100 T
		1000 - 2000		=	-109334	+	39.094 T
		2000 - 5000		=	-107558	+	38.196 T
Y	(FE)	0 - 100	$\mu^{\circ}(Fe)$	=	98740	+	-31.520 T
		100 - 200		=	99198	+	-36.100 T
		200 - 298		=	99294	+	-36.582 T
		298 - 500		=	99268	+	-36.493 T
		500 - 1000		=	98763	+	-35.484 T
		1000 - 2000		=	95123	+	-31.844 T
		2000 - 3136		=	89534	+	-29.060 T
		3500 - 5000		=	0		

TABLE II Simplified formulae for the approximate calculation of the influence of temperature on the standard potentials μ° of the considered substances

II.3 Columns S to Y

(see page 6)

Equilibria	Reactions
SYSTEM OXYGEN	
Reaction involving 1 condensed substance	
1 O_2 s.l.	$(O_2) = O_2$ s.l.
Reactions involving 1 gaseous substance	
2 (O_2)	$(O_2) = 2(O_1)$
4 (O_2)	$(O_2) = (O_2)$
SYSTEM SULPHUR	
Reactions involving 1 condensed substance	
2 S / (S_2)	$2\,S = (S_2)$
6 S / (S_6)	$6\,S = (S_6)$
8 S / (S_8)	$8\,S = (S_8)$
9 S / (S_{total})	$n\,S = (S_{total})$
Reactions involving 1 or 2 gaseous substances	
11 (S_2)	$(S_2) = (S_2)$
18 (S_1) / (S_2)	$2(S_1) + (S_2) = 2(S_2)$
19 (S_2) / (S_6)	$\frac{1}{2}(S_2) + (S_2) = \frac{1}{2}(S_6)$
20 (S_6) / (S_8)	$(S_6) + (S_2) = (S_8)$
SYSTEM OXYGEN- SULPHUR	
Reactions involving 2 condensed substances	
1 S / SO_2	$S + (O_2) = SO_2$
2 SO_2 / SO_3	$2\,SO_2 + (O_2) = 2\,SO_3$
Reactions involving 2 gaesous substances	
4 (S_1) / (SO)	$2(S_1) + (O_2) = 2(SO)$
5 (S_2) / (SO)	$(S_2) + (O_2) = 2(SO)$
7 (S_2) / (SO_2)	$\frac{1}{2}(S_2) + (O_2) = (SO_2)$
15 (SO) / (SO_2)	$2(SO) + (O_2) = 2(SO_2)$
16 (SO_2)/ (SO_3)	$2(SO_2) + (O_2) = 2(SO_3)$
17 $(S_{total})/(SO_2)$	$(S_{total}) + (O_2) = (SO_2)$
Reactions involving 1 condensed or 1 gaseous substance	
18 S / (SO_2)	$S + (O_2) = (SO_2)$
19 SO_2 / (SO_2)	$SO_2 = (SO_2)$
20 SO_3 / (SO_3)	$SO_3 = (SO_3)$
21 (SO_2)/ SO_3	$2(SO_2) + (O_2) = 2\,SO_3$

TABLE III Equilibria , reactions and formulae for the

III.1 Reactions relating to systems O, S and O-S

(see page 6)

REPRODUCED AT GOVERNMENT EXPENSE

ΔG° (calories per molar group)	Equilibrium formulae*
$\mu^{\circ}_{O_2\,s.l.}$	$RT \ln p_{O_2} = \Delta G^{\circ}_r$
$2\mu^{\circ}_{(O_1)}$	$'' = \Delta G^{\circ}_r + 9.1512\,T \log p_{O_1}$
0	$'' = 0 + 4.5756\,T \log p_{O_2}$
$\mu^{\circ}_{(S_2)} - 2\mu^{\circ}_{S}$	$\Delta G^{\circ}_r = -4.5756\,T \log p_{S_2}$
$\mu^{\circ}_{(S_6)} - 6\mu^{\circ}_{S}$	$\Delta G^{\circ}_r = -4.5756\,T \log p_{S_6}$
$\mu^{\circ}_{(S_8)} - 8\mu^{\circ}_{S}$	$\Delta G^{\circ}_r = -4.5756\,T \log p_{S_8}$
0	$RT \ln p_{S_2} = 0 + 4.5756\,T \log p_{S_2}$
$\mu^{\circ}_{(S_2)} - 2\mu^{\circ}_{(S_1)}$	$'' = \Delta G^{\circ}_r + 9.1512\,T \log(p_{S_2}/p_{S_1})$
$1/2\,\mu^{\circ}_{(S_6)} - 3/2\,\mu^{\circ}_{(S_2)}$	$'' = \Delta G^{\circ}_r + 2.2878\,T \log(p_{S_6}/p_{S_2})$
$\mu^{\circ}_{(S_8)} - \mu^{\circ}_{(S_6)} - \mu^{\circ}_{(S_2)}$	$'' = \Delta G^{\circ}_r + 4.5756\,T \log(p_{S_8}/p_{S_6})$
$\mu^{\circ}_{SO_2} - \mu^{\circ}_{S}$	$RT \ln p_{O_2} = \Delta G^{\circ}_r$
$2\mu^{\circ}_{SO_3} - 2\mu^{\circ}_{SO_2}$	$'' = \Delta G^{\circ}_r$
$2\mu^{\circ}_{(SO)} - 2\mu^{\circ}_{(S_1)}$	$'' = \Delta G^{\circ}_r + 9.1512\,T \log(p_{SO}/p_{S_1})$
$2\mu^{\circ}_{(SO)} - \mu^{\circ}_{(S_2)}$	$'' = \Delta G^{\circ}_r - 1.3773\,T + 4.5756\,T \log P$ (for $p_{SO} = p_{S_2}$)
$\mu^{\circ}_{(SO_2)} - 1/2\,\mu^{\circ}_{(S_2)}$	$'' = \Delta G^{\circ}_r - 0.6887\,T + 2.2878\,T \log P$ (for $p_{SO_2} = p_{S_2}$)
$2\mu^{\circ}_{(SO_2)} - 2\mu^{\circ}_{(SO)}$	$'' = \Delta G^{\circ}_r + 9.1512\,T \log(p_{SO_2}/p_{SO})$
$2\mu^{\circ}_{(SO_3)} - 2\mu^{\circ}_{(SO_2)}$	$'' = \Delta G^{\circ}_r + 9.1512\,T \log(p_{SO_3}/p_{SO_2})$
$\mu^{\circ}_{(SO_2)} - \mu^{\circ}_{S}$	$RT \ln p_{O_2} = \Delta G^{\circ}_r + 4.5756\,T \log p_{SO_2}$
$\mu^{\circ}_{(SO_2)} - \mu^{\circ}_{SO_2}$	$\Delta G^{\circ}_r = -4.5756\,T \log p_{SO_2}$
$\mu^{\circ}_{(SO_3)} - \mu^{\circ}_{SO_3}$	$\Delta G^{\circ}_r = -4.5756\,T \log p_{SO_3}$
$2\mu^{\circ}_{SO_3} - 2\mu^{\circ}_{(SO_2)}$	$RT \ln p_{O_2} = \Delta G^{\circ}_r - 9.1512\,T \log p_{SO_2}$

calculation of the equilibrium conditions

(see page 6)

* The equilibrium conditions of the considered reactions correspond to ΔG_r=zero. For reactions where gaseous (O_2) takes part, i.e. all reactions except number 1, the values of $\Delta G_r + RT \ln p_{O_2}$ are thus equal to the equilibrium values of $RT \ln p_{O_2}$ (calories per mole (O_2)) which are shown as ordinate in the equilibrium diagrams of the type $RT \ln p_{O_2} = f(T)$. For reactions where gaseous (O_2) does not take part, the equilibrium conditions (vapor pressure, dissociation constant, etc.) are given by equaling to zero these values of $\Delta G_r + RT \ln p$.

REPRODUCED AT GOVERNMENT EXPENSE

Equilibria	Reactions
SYSTEM OXYGEN- IRON	
Reactions involving 2 condensed substances	
10 Fe / $Fe_{1-x}O$	$2(1-x)Fe + (O_2) = 2\ Fe_{1-x}O$
12 Fe / Fe_3O_4	$3/2\ Fe + (O_2) = 1/2\ Fe_3O_4$
14 $Fe_{1-x}O$ / Fe_3O_4	$\frac{3}{0.5-2x} Fe_{1-x}O + (O_2) = \frac{1-x}{0.5-2x} Fe_3O_4$
16 Fe_3O_4 / $Fe_{3-y}O_4$	
17 $Fe_{3-y}O_4$ / Fe_2O_3	$\frac{4}{1-3y} Fe_{3-y}O_4 + (O_2) = \frac{2(3-y)}{1-3y} Fe_2O_3$
18 Fe_3O_4 / Fe_2O_3	$4\ Fe_3O_4 + (O_2) = 6\ Fe_2O_3$
SYSTEM SULPHUR-IRON	
Reactions involving 2 condensed substances	
1 Fe / FeS	$2\ Fe + (S_2) = 2\ FeS$
2 Fe / $FeS_{1.140}$	$1.754\ Fe + (S_2) = 1.754\ FeS_{1.140}$
3 FeS / $FeS_{1.140}$	$14.286\ FeS + (S_2) = 14.286\ FeS_{1.140}$
4 $FeS_{1.140}$ / FeS_2	$2.326\ FeS_{1.140} + (S_2) = 2.326\ FeS_2$
5 FeS_{1+x} / FeS_2	$\frac{2}{1-x} FeS_{1+x} + (S_2) = \frac{2}{1-x} FeS_2$
Reaction involving 1 condensed substance and 1 gaseous substances	
8 (Fe) / FeS	$2\ (Fe) + (S_2) = 2\ FeS$
Reaction involving 1 condensed substance and 2 gaseous substances	
11 (Fe) / (S_2), Fe	$(Fe) + (S_2) = Fe + (S_2)$
SYSTEM OXYGEN-SULPHUR-IRON	
Reactions involving 2 condensed substances and 1 gaesous substance	
1 $Fe_2O_3,(SO_3)$ / $Fe_2(SO_4)_3$	$Fe_2(SO_4)_3 = Fe_2O_3 + 3\ (SO_3)$
2 $Fe_2O_3,(SO_2)$ / $Fe_2(SO_4)_3$	$0.667\ Fe_2O_3 + 2(SO_2) + (O_2) = 0.667 Fe_2(SO_4)_3$
3 $Fe_2O_3,(SO_2)$ / $FeSO_4$	$2\ Fe_2O_3 + 4(SO_2) + (O_2) = 4\ FeSO_4$
4 $Fe_3O_4,(SO_2)$ / $FeSO_4$	$Fe_3O_4 + 3(SO_2) + (O_2) = 3\ FeSO_4$
5 $FeSO_4,(SO_2)$ / $Fe_2(SO_4)_3$	$2\ FeSO_4 + (SO_2) + (O_2) = Fe_2(SO_4)_3$
6 FeS_2 / $FeSO_4,(SO_2)$	$0.333\ FeS_2 + (O_2) = 0.333 FeSO_4 + 0.333(SO_2)$
7 FeS_2 / $Fe_2O_3,(SO_2)$	$0.365\ FeS_2 + (O_2) = 0.183 Fe_2O_3 + 0.730(SO_2)$
8 FeS_2 / $Fe_3O_4,(SO_2)$	$0.375\ FeS_2 + (O_2) = 0.125 Fe_3O_4 + 0.750(SO_2)$
9 FeS_2 / $Fe_2(SO_4)_3,(S_8)$	$0.333\ FeS_2 + (O_2) = 0.167 Fe_2(SO_4)_3 + 0.02(S_8)$
10 FeS_2 / $FeSO_4,(S_8)$	$0.500\ FeS_2 + (O_2) = 0.500 FeSO_4 + 0.063(S_8)$
11 $FeS_{1.140}$ / $Fe_3O_4,(SO_2)$	$0.554\ FeS_{1.140} + (O_2) = 0.185 Fe_3O_4 + 0.631(SO_2)$
12 FeS / $Fe_3O_4,(SO_2)$	$0.600\ FeS + (O_2) = 0.200 Fe_3O_4 + 0.600(SO_2)$

TABLE III Equilibria , reactions and formulae for the

III.2 Reactions relating to systems O-Fe ,

(see page 6)

REPRODUCED AT GOVERNMENT EXPENSE

ΔG° (calories per molar group)	Equilibrium formulae
$1/2\ \mu^\circ_{Fe_3O_4}$	$RT\ln p_{O_2} = \Delta G^\circ_r$
$\frac{1}{0.5-2x}((1-x)\mu^\circ_{Fe_3O_4} - 3\,\mu^\circ_{Fe_{1-x}O})$	
$\frac{2}{1-3y}((3-y)\mu^\circ_{Fe_2O_3} - 2\,\mu^\circ_{Fe_{3-y}O_4})$	$\quad = \Delta G^\circ_r$
$6\ \mu^\circ_{Fe_2O_3} - 4\,\mu^\circ_{Fe_3O_4}$	$\quad = \Delta G^\circ_r$
$2\ \mu^\circ_{FeS} - \mu^\circ_{(S_2)} - 2\ \mu^\circ_{Fe}$	$RT\ln p_{S_2} = \Delta G^\circ_r$
$1.754\ \mu^\circ_{FeS_{1.140}} - \mu^\circ_{(S_2)} - 1.754\ \mu^\circ_{Fe}$	$\quad = \Delta G^\circ_r$
$14.286\ \mu^\circ_{FeS_{1.140}} - \mu^\circ_{(S_2)} - 14.286\ \mu^\circ_{FeS}$	$\quad = \Delta G^\circ_r$
$2.326\ \mu^\circ_{FeS_2} - \mu^\circ_{(S_2)} - 2.326\ \mu^\circ_{FeS_{1.140}}$	$\quad = \Delta G^\circ_r$
$2\ \mu^\circ_{FeS} - \mu^\circ_{(S_2)} - 2\ \mu^\circ_{(Fe)}$	$\quad = \Delta G^\circ_r - 9.1512\ T \log p_{Fe}$
$\mu^\circ_{Fe} - \mu^\circ_{(Fe)}$	$\quad = \Delta G^\circ_r + 4.5756\ T \log (p_{S_2}/p_{Fe})$
$\mu^\circ_{Fe_2O_3} + 3\,\mu^\circ_{(SO_3)} - \mu^\circ_{Fe_2(SO_4)_3}$	$\Delta G^\circ_r = -13.7268\ T \log p_{SO_3}$
$0.667\mu^\circ_{Fe_2(SO_4)_3} - 2\,\mu^\circ_{(SO_2)} - 0.667\ \mu^\circ_{Fe_2O_3}$	$RT\ln p_{O_2} = \Delta G^\circ_r - 9.1512\ T \log p_{SO_2}$
$4\ \mu^\circ_{FeSO_4} - 4\,\mu^\circ_{(SO_2)} - 2\ \mu^\circ_{Fe_2O_3}$	$\quad = \Delta G^\circ_r - 18.3024\ T \log p_{SO_2}$
$3\ \mu^\circ_{FeSO_4} - 3\,\mu^\circ_{(SO_2)} - \mu^\circ_{Fe_3O_4}$	$\quad = \Delta G^\circ_r - 13.7268\ T \log p_{SO_2}$
$\mu^\circ_{Fe_2(SO_4)_3} - \mu^\circ_{(SO_2)} - 2\ \mu^\circ_{FeSO_4}$	$\quad = \Delta G^\circ_r - 4.5756\ T \log p_{SO_2}$
$0.333\mu^\circ_{FeSO_4} + 0.333\,\mu^\circ_{(SO_2)} - 0.333\ \mu^\circ_{FeS_2}$	$\quad = \Delta G^\circ_r + 1.5237\ T \log p_{SO_2}$
$0.183\mu^\circ_{Fe_2O_3} + 0.730\,\mu^\circ_{(SO_2)} - 0.365\ \mu^\circ_{FeS_2}$	$\quad = \Delta G^\circ_r + 3.3402\ T \log p_{SO_2}$
$0.125\mu^\circ_{Fe_3O_4} + 0.750\,\mu^\circ_{(SO_2)} - 0.375\ \mu^\circ_{FeS_2}$	$\quad = \Delta G^\circ_r + 3.4317\ T \log p_{SO_2}$
$0.167\mu^\circ_{Fe_2(SO_4)_3} + 0.020\mu^\circ_{(S_8)} - 0.333\ \mu^\circ_{FeS_2}$	$\quad = \Delta G^\circ_r + 0.0916\ T \log p_{S_8}$
$0.500\mu^\circ_{FeSO_4} + 0.063\mu^\circ_{(S_8)} - 0.500\ \mu^\circ_{FeS_2}$	$\quad = \Delta G^\circ_r + 0.2883\ T \log p_{S_8}$
$0.185\mu^\circ_{Fe_3O_4} + 0.631\mu^\circ_{(SO_2)} - 0.554\ \mu^\circ_{FeS_{1.140}}$	$\quad = \Delta G^\circ_r + 2.8872\ T \log p_{SO_2}$
$0.200\mu^\circ_{Fe_3O_4} + 0.600\mu^\circ_{(SO_2)} - 0.600\ \mu^\circ_{FeS}$	$\quad = \Delta G^\circ_r + 2.7454\ T \log p_{SO_2}$

<u>calculation of the equilibrium conditions</u>

S-Fe and O-S-Fe

(see page 6)

REPRODUCED AT GOVERNMENT EXPENSE

		①			②			③		
		FE2(SO4)3 /FE2O3,(SO3)			FE2O3,(SO2)/FE2(SO4)3			FE2O3,(SO2)/FESO4		
T °K	1000/T	ΔG°(CAL.)	E°(MV)	LOG P_{SO_3}	ΔG°(CAL.)	E°(MV)	LOG P_{O_2}	ΔG°(CAL.)	E°(MV)	LOG P_{O_2}
0	inf.							-206042	-2233	inf.
100	10.000							-188158	-2039	-411.2204
200	5.000							-167156	-1812	-182.6602
298	3.356	97096		-23.7365	-98747	-1070	-72.4202	-146302	-1586	-107.2966
300	3.333	96854		-23.5194	-98502	-1067	-71.7589	-145908	-1581	-106.2943
400	2.500	83752		-15.2534	-85249	-924	-46.5780	-124722	-1352	-68.1452
500	2.000	70732		-10.3057	-72036	-780	-31.4870	-103658	-1123	-45.3090
600	1.667	57796		-7.0174	-58889	-638	-21.4504	-82762	-897	-30.1461
700	1.429	44945		-4.6775	-45815	-496	-14.3041	-62026	-672	-19.3655
800	1.250	32159		-2.9285	-32806	-355	-8.9622	-41440	-449	-11.3209
900	1.111	19424		-1.5723	-19846	-215	-4.8193	-20956	-227	-5.0888
1000	1.000	6717		-.4893	-6928	-75	-1.5141	-558	-6	-.1220
1100	.909	-5930		.3927	5929	64	1.1780	19710	213	3.9160
1200	.833	-18484		1.1221	18710	202	3.4076	39784	431	7.2457
1300	.769	-30947		1.7342	31411	340	5.2807	59652	646	10.0284
1400	.714	-43321		2.2342	44036	477	6.8744	79340	860	12.3856
1500	.667	-55613		2.7009	56595	613	8.2459	98856	1071	14.4034
1600	.625	-67820		3.0879	69081	748	9.4361	118188	1281	16.1438
1700	.588	-79953		3.4262	81503	883	10.4780	137360	1489	17.6589
1800	.556	-92005		3.7237	93862	1017	11.3964	156376	1695	18.9867
1900	.526	-103984		3.9870	106158	1150	12.2110	175236	1899	20.1568
2000	.500	-115882		4.2210	118392	1283	12.9373	193940	2102	21.1928

TABLE IV Standard equilibrium conditions of reaction relating to system O-S-Fe

IV.1 Reactions 1 to 3

(see page 8)

		④			⑤			⑥		
		$FeSO_4$,(SO_2)/$FeSO_4$			$FeSO_4$,(SO_2)/$Fe_2(SO_4)_3$			FeS_2 /$FeSO_4$,(SO_2)		
T°K	1000/T	ΔG°_T(CAL.)	E°(MV)	LOG P_{O_2}	ΔG°_T(CAL.)	E°(MV)	LOG P_{O_2}	ΔG°_T(CAL.)	E°(MV)	LOG P_{O_2}
0	*inf.*	-181769	-1970	*inf.*				-83233	-902	*inf.*
100	10.000	-167443	-1815	-365.9476				-81394	-882	-177.8871
200	5.000	-150282	-1629	-164.2211				-79124	-857	-86.4630
298	3.356	-133114	-1443	-97.6246	-74789	-810	-54.8496	-76810	-832	-56.3318
300	3,333	-132790	-1439	-96.7378	-74618	-808	-54.3594	-76766	-832	-55.9242
400	2.500	-115343	-1250	-63.0207	-65341	-708	-35.7008	-74381	-806	-40.6400
500	2.000	-97993	-1062	-42.8329	-56064	-607	-24.5056	-71994	-780	-31.4687
600	1.667	-80759	-875	-29.4165	-46802	-507	-17.0477	-69626	-754	-25.3613
700	1.429	-63609	-689	-19.8597	-37569	-407	-11.7296	-67262	-729	-21.0002
800	1.250	-46515	-504	-12.7073	-28356	-307	-7.7465	-64983	-704	-17.7526
900	1.111	-29428	-319	-7.1461	-19170	-207	-4.6551	-62678	-679	-15.2203
1000	1.000	-12422	-134	-2.7148	-10005	-108	-2.1866	-60393	-654	-13.1989
1100	.909	4427	47	.8796	-865	-9	-.1719	-58129	-630	-11.5492
1200	.833	21124	229	3.8472	8258	89	1.5040	-55880	-605	-10.1772
1300	.769	37664	408	6.3319	17363	188	2.9190	-53645	-581	-9.0186
1400	.714	54059	586	8.4390	26445	286	4.1283	-51425	-557	-8.0278
1500	.667	70317	762	10.2452	35513	384	5.1743			
1600	.625	86431	937	11.8060	44564	483	6.0872			
1700	.588	102414	1110	13.1663	53600	581	6.8908			
1800	.556	118267	1282	14.3596	62618	678	7.6029			
1900	.526	133995	1452	15.4130	71620	776	8.2382			
2000	.500	149591	1621	16.3466	80607	873	8.8084			

TABLE IV Standard equilibrium conditions of reaction relating to system O-S-Fe

IV.2 Reactions 4 to 6 (see page 8)

		⑦			⑧			⑨		
		FeS2 /Fe2O3,(SO2)			FeS2 /Fe3O4,(SO2)			FeS2 /Fe2(SO4)3,(SO)		
T °K	1000/T	ΔG_T°(CAL.)	E°(MV)	LOG P_{O_2}	ΔG_T°(CAL.)	E°(MV)	LOG P_{O_2}	ΔG_T°(CAL.)	E°(MV)	LOG P_{O_2}
0	inf.	-72528	-786	inf.	-71010	-769	inf.			
100	10.000	-72142	-782	-157.6668	-70730	-766	-154.5808			
200	5.000	-71566	-775	-78.2040	-70318	-762	-76.8402			
298	3.356	-70930	-768	-52.0194	-69858	-757	-51.2332	-77353	-838	-56.7300
300	3.333	-70917	-768	-51.6632	-69849	-757	-50.8851	-77281	-837	-56.2994
400	2.500	-70234	-761	-38.3742	-69345	-751	-37.8885	-73384	-795	-40.0953
500	2.000	-69536	-753	-30.3943	-68826	-746	-30.0839	-69494	-753	-30.3759
600	1.667	-68844	-746	-25.0765	-68313	-740	-24.8831	-65628	-711	-23.9051
700	1.429	-68141	-738	-21.2746	-67794	-734	-21.1663	-61779	-669	-19.2883
800	1.250	-67519	-731	-18.4454	-67365	-730	-18.4033	-58003	-628	-15.8457
900	1.111	-66860	-724	-16.2359	-66905	-725	-16.2468	-54217	-587	-13.1657
1000	1.000	-66213	-717	-14.4709	-66458	-720	-14.5244	-50454	-546	-11.0268
1100	.909	-65578	-710	-13.0292	-66014	-715	-13.1158	-46718	-506	-9.2820
1200	.833	-64941	-704	-11.8274	-65568	-710	-11.9416	-43000	-466	-7.8314
1300	.769	-64302	-697	-10.8102	-65119	-705	-10.9475	-39302	-426	-6.6073
1400	.714	-63662	-690	-9.9381	-64669	-701	-10.0953	-35622	-386	-5.5609
1500	.667									
1600	.625									
1700	.588									
1800	556									
1900	.526									
2000	.500									

TABLE IV Standard equilibrium conditions of reaction relating to system O-S-Fe

IV.3 Reactions 7 to 9 (see page 8)

		(10)			(11)			(12)		
		FeS2 /FeSO4,(S8)			FeSi.140 /Fe3O4,(SO2)			FeS /Fe3O4,(SO2)		
T°K	1000/T	ΔG°(CAL.)	E°(MV)	LOG P_{O_2}	ΔG°(CAL.)	E°(MV)	LOG P_{O_2}	ΔG°(CAL.)	E°(MV)	LOG P_{O_2}
0	inf.				-77630	-841	inf.	-80831	-876	inf.
100	10.000				-76770	-832	-167.7813	-79875	-865	-174.5673
200	5.000				-75908	-818	-82.5116	-78512	-851	-85.7942
298	3.356	-78756	-853	-57.7590	-74139	-803	-54.3729	-77061	-835	-56.5159
300	3.333	-78692	-853	-57.3273	-74112	-803	-53.9907	-77034	-835	-56.1194
400	2.500	-75248	-815	-41.1137	-72645	-787	-39.6915	-75492	-818	-41.2470
500	2.000	-71825	-778	-31.3948	-71136	-771	-31.0936	-73809	-800	-32.2620
600	1.667	-68443	-741	-24.9304	-69603	-754	-25.3530	-72081	-781	-26.2556
700	1.429	-65090	-705	-20.3221	-68038	-737	-21.2425	-70327	-762	-21.9572
800	1.250	-61814	-670	-16.8869	-66556	-721	-18.1823	-68657	-744	-18.7563
900	1.111	-58542	-634	-14.2160	-65065	-705	-15.8000	-66983	-726	-16.2657
1000	1.000	-55304	-599	-12.0867	-63200	-685	-13.8124	-65333	-708	-14.2786
1100	.909	-52100	-564	-10.3513	-62143	-673	-12,3467	-63692	-690	-12.6545
1200	.833	-48921	-530	-8.9098	-60689	-657	-11.0530	-62054	-672	-11.3016
1300	.769	-45768	-496	-7.6943	-59234	-642	-9.9582	-60416	-654	-10.1569
1400	.714	-42639	-462	-6.6563	-57775	-626	-9.0191	-58774	-637	-9.1751
1500	.667				-56308	-610	-8.2041	-57013	-618	-8.3068
1600	.625				-54824	-594	-7.4886	-55053	-596	-7.5199
1700	.588				-53321	-578	-6.8549	-53096	-575	-6.8260
1800	.556				-51794	-561	-6.2887	-51139	-554	-6.2091
1900	.526							-49184	-533	-5.6575
2000	.500							-47231	-512	-5.1612
2500	.400							-37464	-406	-3.2751
3000	.333							-27696	-300	-2.0177

TABLE IV Standard equilibrium conditions of reaction relating to system O-S-Fe

IV.4 Reactions 10 to 12 (see page 8)

N°	Equilibria	Temperature range (°K)	RT ln p_{O_2} (calories)
①	Fe2(SO4)3 /Fe2O3,(SO3)	298 - 500	
		500 - 900	
		900 - 1000	
		1000 - 2000	
②	Fe2O3,(SO2)/Fe2(SO4)3	298 - 500	-138152 + 132.233 T - 9.151 T LOG P(SO2)
		500 - 900	-137273 + 130.475 T - 9.151 T LOG P(SO2)
		900 - 1000	-136108 + 129.180 T - 9.151 T LOG P(SO2)
		1000 - 2000	-132248 + 125.320 T - 9.151 T LOG P(SO2)
③	Fe2O3,(SO2)/FeSO4	0 - 100	-206042 + 178.840 T - 18.302 T LOG P(SO2)
		100 - 200	-209160 + 210.020 T - 18.302 T LOG P(SO2)
		200 - 298	-209715 + 212.796 T - 18.302 T LOG P(SO2)
		298 - 500	-209212 + 211.109 T - 18.302 T LOG P(SO2)
		500 - 900	-207035 + 206.755 T - 18.302 T LOG P(SO2)
		900 - 1000	-204538 + 203.980 T - 18.302 T LOG P(SO2)
		1000 - 2000	-195056 + 194.498 T - 18.302 T LOG P(SO2)
④	Fe3O4,(SO2)/FeSO4	0 - 100	-181769 + 143.260 T - 13.727 T LOG P(SO2)
		100 - 200	-184604 + 171.610 T - 13.727 T LOG P(SO2)
		200 - 298	-185318 + 175.184 T - 13.727 T LOG P(SO2)
		298 - 500	-184926 + 173.866 T - 13.727 T LOG P(SO2)
		500 - 900	-183699 + 171.413 T - 13.727 T LOG P(SO2)
		900 - 1000	-182482 + 170.060 T - 13.727 T LOG P(SO2)
		1000 - 2000	-174435 + 162.013 T - 13.727 T LOG P(SO2)
⑤	FeSO4,(SO2)/Fe2(SO4)3	298 - 500	-102413 + 92.698 T - 4.576 T LOG P(SO2)
		500 - 1000	-102123 + 92.118 T - 4.576 T LOG P(SO2)
		1000 - 2000	-100617 + 90.612 T - 4.576 T LOG P(SO2)
⑥	FeS2 /FeSO4,(SO2)	0 - 100	-83233 + 18.390 T + 1.524 T LOG P(SO2)
		100 - 200	-83664 + 22.700 T + 1.524 T LOG P(SO2)
		200 - 298	-83846 + 23.612 T + 1.524 T LOG P(SO2)
		298 - 500	-83914 + 23.842 T + 1.524 T LOG P(SO2)
		500 - 1000	-83595 + 23.202 T + 1.524 T LOG P(SO2)
		1000 - 1400	-82813 + 22.420 T + 1.524 T LOG P(SO2)
⑦	FeS2 /Fe2O3,(SO2)	0 - 100	-72528 + 3.860 T + 3.340 T LOG P(SO2)
		100 - 200	-72718 + 5.760 T + 3.340 T LOG P(SO2)
		200 - 298	-72863 + 6.490 T + 3.340 T LOG P(SO2)
		298 - 500	-72986 + 6.901 T + 3.340 T LOG P(SO2)
		500 - 900	-72881 + 6.690 T + 3.340 T LOG P(SO2)
		900 - 1000	-72683 + 6.470 T + 3.340 T LOG P(SO2)
		1000 - 1400	-72590 + 6.378 T + 3.340 T LOG P(SO2)

TABLE V Influence of temperature on the equilibrium

V.1 Reactions 1 to 7

(see page 9)

E_{soe}(mv) $\left(= \frac{RT \ln p_{O_2}}{92.242}\right)$	$\log p_{O_2}$(atm) $\left(= \frac{RT \ln p_{O_2}}{4.5756\ T}\right)$ (or logp
	LOG P(SO3) = -9906.8/T + 9.508
	LOG P(SO3) = -9825.1/T + 9.344
	LOG P(SO3) = -9746.4/T + 9.257
	LOG P(SO3) = -9420.7/T + 8.931
-1497.7 + 1.434 T - .099 T LOG P(SO2)	-30193.2/T + 28.900 - 2.000 LOG P(SO2)
-1488.2 + 1.414 T - .099 T LOG P(SO2)	-30001.1/T + 28.515 - 2.000 LOG P(SO2)
-1475.6 + 1.400 T - .099 T LOG P(SO2)	-29746.5/T + 28.232 - 2.000 LOG P(SO2)
-1433.7 + 1.359 T - .099 T LOG P(SO2)	-28902.9/T + 27.389 - 2.000 LOG P(SO2)
-2233.7 + 1.939 T - .198 T LOG P(SO2)	-45030.6/T + 39.086 - 4.000 LOG P(SO2)
-2267.5 + 2.277 T - .198 T LOG P(SO2)	-45712.0/T + 45.900 - 4.000 LOG P(SO2)
-2273.5 + 2.307 T - .198 T LOG P(SO2)	-45833.3/T + 46.507 - 4.000 LOG P(SO2)
-2268.1 + 2.289 T - .198 T LOG P(SO2)	-45723.4/T + 46.138 - 4.000 LOG P(SO2)
-2244.5 + 2.241 T - .198 T LOG P(SO2)	-45247.6/T + 45.186 - 4.000 LOG P(SO2)
-2217.4 + 2.211 T - .198 T LOG P(SO2)	-44701.9/T + 44.580 - 4.000 LOG P(SO2)
-2114.6 + 2.109 T - .198 T LOG P(SO2)	-42629.6/T + 42.508 - 4.000 LOG P(SO2)
-1970.6 + 1.553 T - .149 T LOG P(SO2)	-39725.7/T + 31.310 - 3.000 LOG P(SO2)
-2001.3 + 1.860 T - .149 T LOG P(SO2)	-40345.3/T + 37.505 - 3.000 LOG P(SO2)
-2009.0 + 1.899 T - .149 T LOG P(SO2)	-40501.4/T + 38.286 - 3.000 LOG P(SO2)
-2004.8 + 1.885 T - .149 T LOG P(SO2)	-40415.7/T + 37.999 - 3.000 LOG P(SO2)
-1991.5 + 1.858 T - .149 T LOG P(SO2)	-40147.5/T + 37.462 - 3.000 LOG P(SO2)
-1978.3 + 1.844 T - .149 T LOG P(SO2)	-39881.5/T + 37.167 - 3.000 LOG P(SO2)
-1891.1 + 1.756 T - .149 T LOG P(SO2)	-38122.9/T + 35.408 - 3.000 LOG P(SO2)
-1110.3 + 1.005 T - .050 T LOG P(SO2)	-22382.4/T + 20.259 - 1.000 LOG P(SO2)
-1107.1 + .999 T - .050 T LOG P(SO2)	-22319.0/T + 20.132 - 1.000 LOG P(SO2)
-1090.8 + .982 T - .050 T LOG P(SO2)	-21989.9/T + 19.803 - 1.000 LOG P(SO2)
-902.3 + .199 T + .017 T LOG P(SO2)	-18190.6/T + 4.019 + .333 LOG P(SO2)
-907.0 + .246 T + .017 T LOG P(SO2)	-18284.8/T + 4.961 + .333 LOG P(SO2)
-909.0 + .256 T + .017 T LOG P(SO2)	-18324.6/T + 5.160 + .333 LOG P(SO2)
-909.7 + .258 T + .017 T LOG P(SO2)	-18339.5/T + 5.211 + .333 LOG P(SO2)
-906.3 + .252 T + .017 T LOG P(SO2)	-18269.7/T + 5.071 + .333 LOG P(SO2)
-897.8 + .243 T + .017 T LOG P(SO2)	-18098.8/T + 4.900 + .333 LOG P(SO2)
-786.3 + .042 T + .036 T LOG P(SO2)	-15851.0/T + .844 + .730 LOG P(SO2)
-788.3 + .062 T + .036 T LOG P(SO2)	-15892.6/T + 1.259 + .730 LOG P(SO2)
-789.9 + .070 T + .036 T LOG P(SO2)	-15924.3/T + 1.418 + .730 LOG P(SO2)
-791.2 + .075 T + .036 T LOG P(SO2)	-15951.1/T + 1.508 + .730 LOG P(SO2)
-790.1 + .073 T + .036 T LOG P(SO2)	-15928.2/T + 1.462 + .730 LOG P(SO2)
-788.0 + .070 T + .036 T LOG P(SO2)	-15884.9/T + 1.414 + .730 LOG P(SO2)
-787.0 + .069 T + .036 T LOG P(SO2)	-15864.6/T + 1.394 + .730 LOG P(SO2)

conditions of the considered reactions

(see page 9)

N°	Equilibria	Temperature range (°K)	RT ln p_{O_2} (calories)
8	FeS2 /Fe3O4,(SO2)	0 - 100	-71010 + 2.800 T + 3.432 T LOG P(SO2)
		100 - 200	-71142 + 4.120 T + 3.432 T LOG P(SO2)
		200 - 298	-71256 + 4.694 T + 3.432 T LOG P(SO2)
		298 - 500	-71380 + 5.109 T + 3.432 T LOG P(SO2)
		500 - 900	-71227 + 4.803 T + 3.432 T LOG P(SO2)
		900 - 1000	-70928 + 4.470 T + 3.432 T LOG P(SO2)
		1000 - 1400	-70930 + 4.473 T + 3.432 T LOG P(SO2)
9	FeS2 /Fe2(SO4)3,(S8)	298 - 500	-88946 + 38.906 T + .096 T LOG P(S8)
		500 - 1000	-88534 + 38.080 T + .096 T LOG P(S8)
		1000 - 1400	-87534 + 37.080 T + .096 T LOG P(S8)
10	FeS2 /FeSO4,(S8)	298 - 500	-88980 + 34.312 T + .288 T LOG P(S8)
		500 - 1000	-88346 + 33.042 T + .288 T LOG P(S8)
		1000 - 1400	-86966 + 31.663 T + .288 T LOG P(S8)
11	FeS1.140 /Fe3O4,(SO2)	0 - 100	-77630 + 8.600 T + 2.887 T LOG P(SO2)
		100 - 200	-78032 + 12.620 T + 2.887 T LOG P(SO2)
		200 - 298	-78301 + 13.969 T + 2.887 T LOG P(SO2)
		298 - 500	-78569 + 14.866 T + 2.887 T LOG P(SO2)
		500 - 1000	-79072 + 15.872 T + 2.887 T LOG P(SO2)
		1000 - 1800	-77457 + 14.258 T + 2.887 T LOG P(SO2)
12	FeS /Fe3O4,(SO2)	0 - 100	-80831 + 9.560 T + 2.745 T LOG P(SO2)
		100 - 200	-81238 + 13.630 T + 2.745 T LOG P(SO2)
		200 - 298	-81473 + 14.806 T + 2.745 T LOG P(SO2)
		298 - 411	-81644 + 15.382 T + 2.745 T LOG P(SO2)
		411 - 500	-82313 + 17.009 T + 2.745 T LOG P(SO2)
		500 - 1000	-82285 + 16.952 T + 2.745 T LOG P(SO2)
		1000 - 1463	-81730 + 16.398 T + 2.745 T LOG P(SO2)
		1463 - 2000	-86374 + 19.572 T + 2.745 T LOG P(SO2)
		2000 - 3000	-86301 + 19.535 T + 2.745 T LOG P(SO2)

TABLE V Influence of temperature on the

V.2 Reactions 8 to 12

(see page 9)

E_{soe} (mv) $\left(= \frac{RT \ln p_{O_2}}{92.242}\right)$	$\log p_{O_2}$ (atm) $\left(= \frac{RT \ln p_{O_2}}{4.5756\ T}\right)$
-769.8 + .030 T + .037 T LOG P(SO2)	-15519.3/T + .612 + .750 LOG P(SO2)
-771.3 + .045 T + .037 T LOG P(SO2)	-15548.1/T + .900 + .750 LOG P(SO2)
-772.5 + .051 T + .037 T LOG P(SO2)	-15573.0/T + 1.026 + .750 LOG P(SO2)
-773.8 + .055 T + .037 T LOG P(SO2)	-15600.1/T + 1.117 + .750 LOG P(SO2)
-772.2 + .052 T + .037 T LOG P(SO2)	-15566.7/T + 1.050 + .750 LOG P(SO2)
-768.9 + .048 T + .037 T LOG P(SO2)	-15501.4/T + .977 + .750 LOG P(SO2)
-769.0 + .048 T + .037 T LOG P(SO2)	-15501.8/T + .977 + .750 LOG P(SO2)
-964.3 + .422 T + .001 T LOG P(S8)	-19439.2/T + 8.503 + .021 LOG P(S8)
-959.8 + .413 T + .001 T LOG P(S8)	-19349.2/T + 8.322 + .021 LOG P(S8)
-949.0 + .402 T + .001 T LOG P(S8)	-19130.6/T + 8.104 + .021 LOG P(S8)
-964.6 + .372 T + .003 T LOG P(S8)	-19446.6/T + 7.499 + .063 LOG P(S8)
-957.8 + .358 T + .003 T LOG P(S8)	-19308.1/T + 7.221 + .063 LOG P(S8)
-942.8 + .343 T + .003 T LOG P(S8)	-19006.5/T + 6.920 + .063 LOG P(S8)
-841.6 + .093 T + .031 T LOG P(SO2)	-16966.1/T + 1.880 + .631 LOG P(SO2)
-845.9 + .137 T + .031 T LOG P(SO2)	-17053.9/T + 2.758 + .631 LOG P(SO2)
-848.9 + .151 T + .031 T LOG P(SO2)	-17112.7/T + 3.053 + .631 LOG P(SO2)
-851.8 + .161 T + .031 T LOG P(SO2)	-17171.3/T + 3.249 + .631 LOG P(SO2)
-857.2 + .172 T + .031 T LOG P(SO2)	-17281.2/T + 3.469 + .631 LOG P(SO2)
-839.7 + .155 T + .031 T LOG P(SO2)	-16928.3/T + 3.116 + .631 LOG P(SO2)
-876.3 + .104 T + .030 T LOG P(SO2)	-17665.7/T + 2.089 + .600 LOG P(SO2)
-880.7 + .148 T + .030 T LOG P(SO2)	-17754.6/T + 2.979 + .600 LOG P(SO2)
-883.3 + .161 T + .030 T LOG P(SO2)	-17806.0/T + 3.236 + .600 LOG P(SO2)
-885.1 + .167 T + .030 T LOG P(SO2)	-17843.3/T + 3.362 + .600 LOG P(SO2)
-892.4 + .184 T + .030 T LOG P(SO2)	-17989.6/T + 3.717 + .600 LOG P(SO2)
-892.1 + .184 T + .030 T LOG P(SO2)	-17983.4/T + 3.705 + .600 LOG P(SO2)
-886.0 + .178 T + .030 T LOG P(SO2)	-17862.1/T + 3.584 + .600 LOG P(SO2)
-936.4 + .212 T + .030 T LOG P(SO2)	-18877.1/T + 4.277 + .600 LOG P(SO2)
-935.6 + .212 T + .030 T LOG P(SO2)	-18861.1/T + 4.269 + .600 LOG P(SO2)

equilibrium conditions of the considered reactions

(see page 9)

p. 40 Blank

INDEX OF FIGURES

pages

FIGURE 1 (n° 2784) Equilibrium diagram E = f(T) for the system O-Fe (temperature from zero to 1800°K, E from -1.70 to +0.20 $volt_{soe}$) 43

FIGURE 2 (n° 2785) Equilibirum diagram E = f(T) for the system O-S (temperature from zero to 1800°K, E from -1.70 to +0.20 $volt_{soe}$) 44

FIGURE 3 (n° 2786) Equilibrium diagram E = f(T) for the system S-Fe (temperature from zero to 1800°K, E from -1.70 to +0.20 $volt_{sse}$) 45

FIGURE 4 (n° 2756) Equilibrium diagram E = f(T) for the system O-S-Fe (temperature from zero to 1500°K, E from -1.70 to +0.20 $volt_{soe}$) 46

FIGURE 5 Condition of catalytic activity of Fe_2O_3 for the oxidation of (SO_2) to (SO_3)

5 a (n° 2787) temperature from zero to 1500°K, E from -1.70 to +0.20 $volt_{soe}$ 47

5 b (n° 2788) temperature from 890°K to 1070°K, E from -0.10 to +0.02 $volt_{soe}$ 48

FIGURE 6 (n° 2757) Conditions of stability of iron salts and of iron oxides and iron in the presence of dry air polluted by (SO_3), (SO_2) or sulphur vapor for different partial pressures of $(SO_3)+(SO_2)+(S_{total})$:

a. 10^{-6} atm. b. 10^{-4} atm.
c. 10^{-2} atm. d. 1 atm. 49

P. 43 Blank

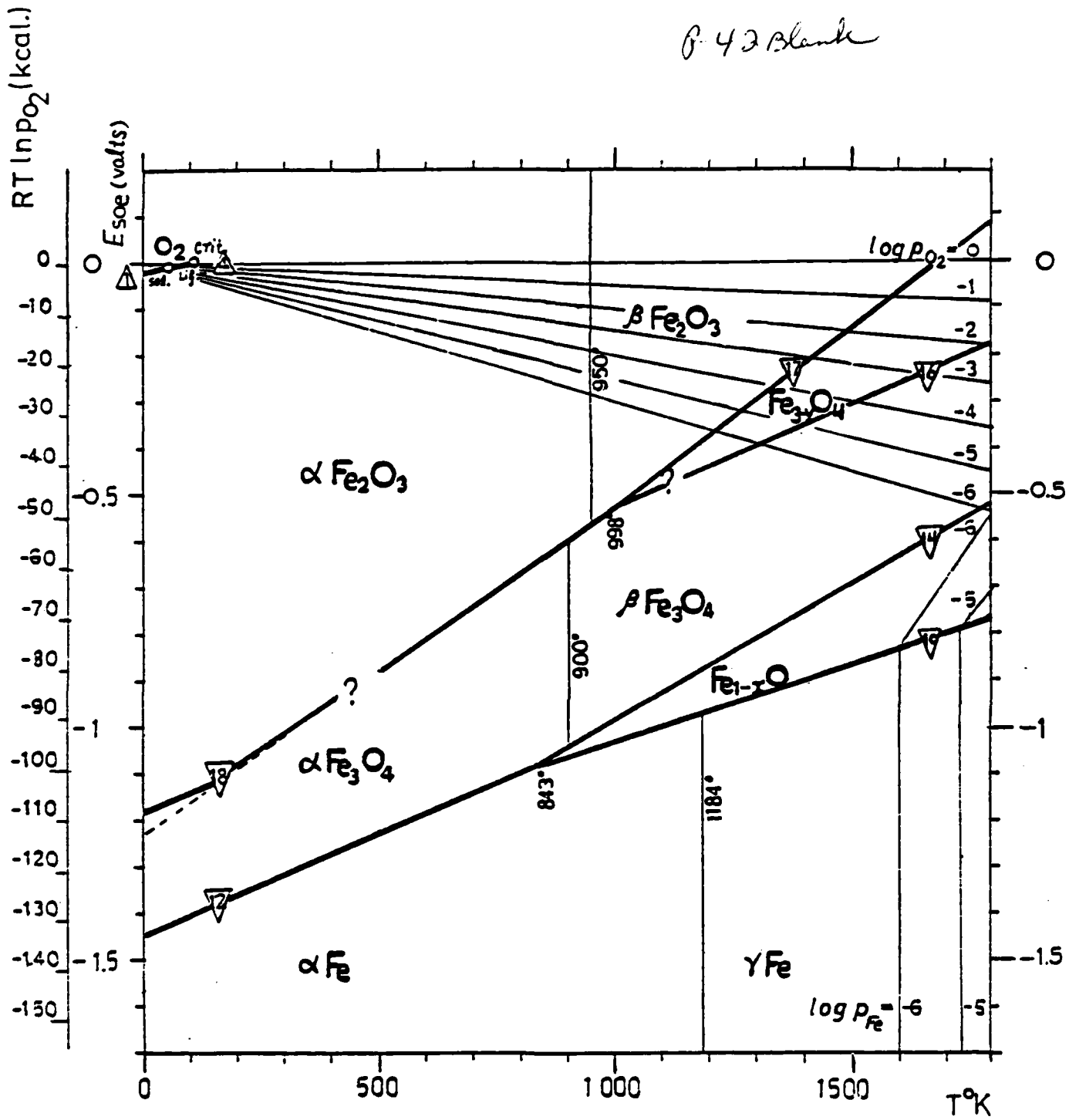

FIGURE 1 Equilibrium diagram E = f(T) for the system O-Fe (temperature from zero to 1800°K, E from -1.70 to +0.20 $volt_{soe}$)

MP.2621	020884	2784

(see page 9)

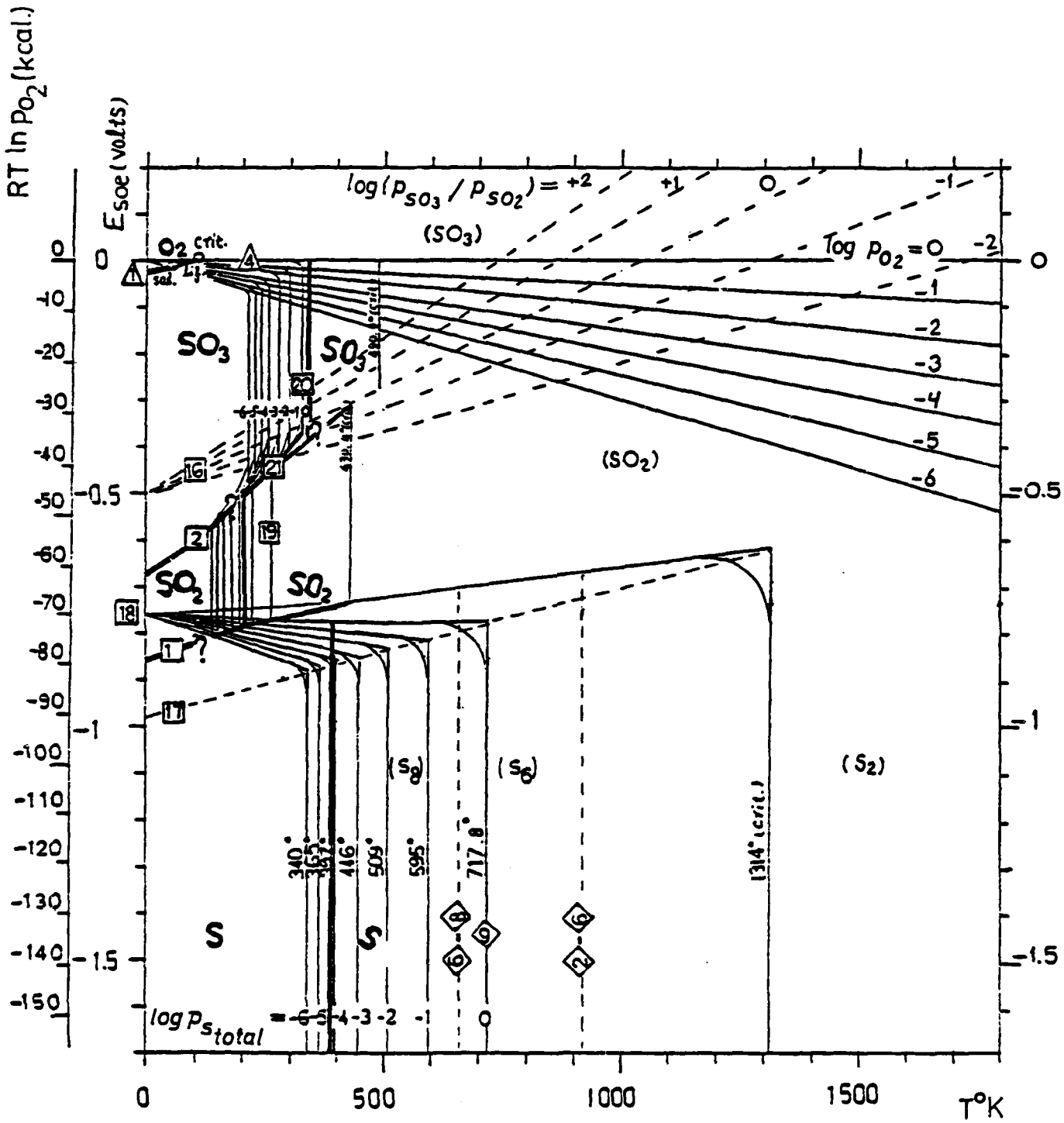

FIGURE 2 Equilibrium diagram E = f(T) for the system O-S (temperature from zero to 1800°K, E from -1.70 to + 0.20 $volt_{soe}$)

MP.2621	050884	2785

(see page 9)

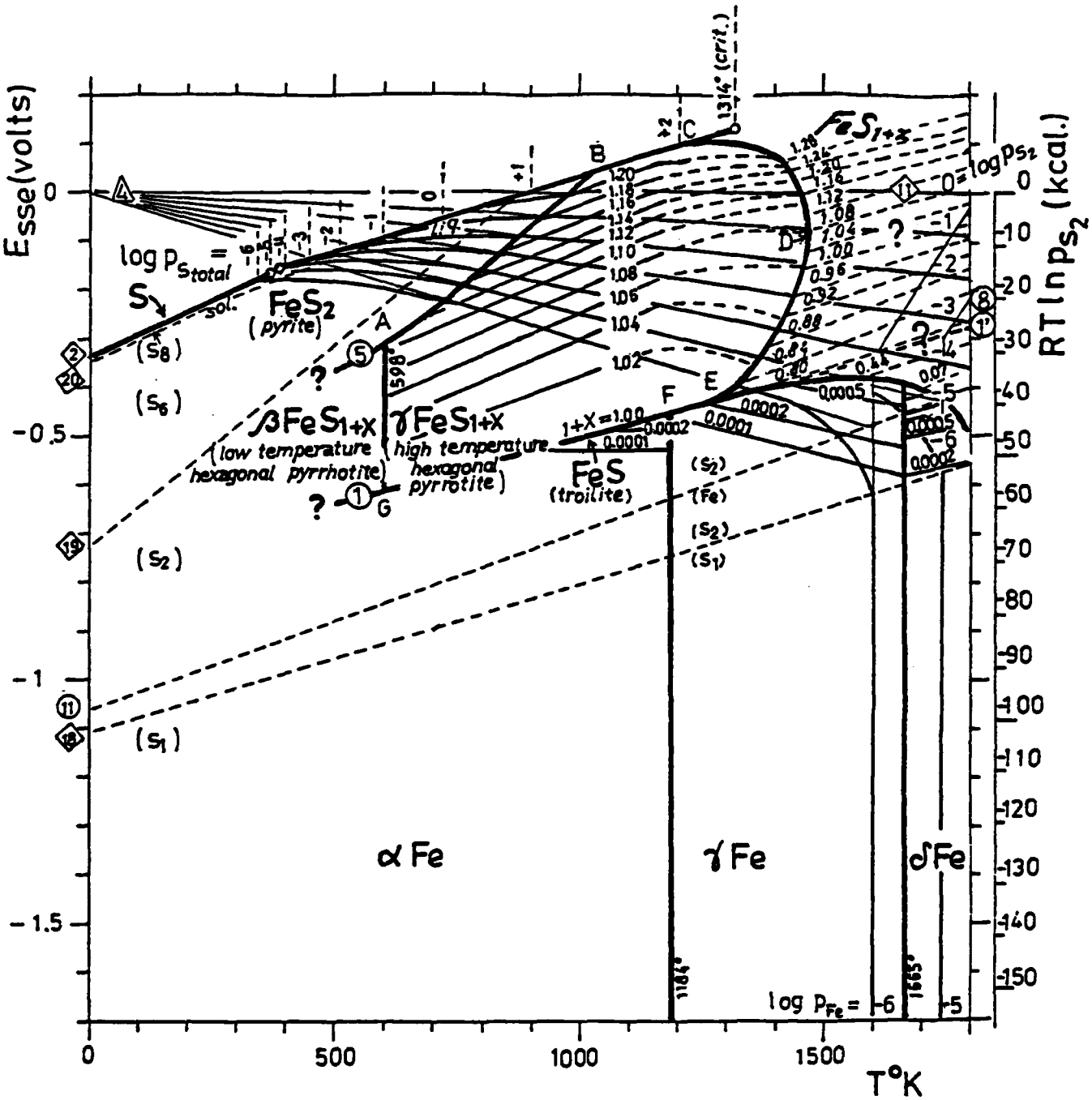

FIGURE 3 Equilibrium diagram E =f(T) for the system S-Fe (temperature from zero to 1800°K, E from -1.70 to +0.20 $volt_{sse}$)

MP. 2621	080884	2786

(see page 10)

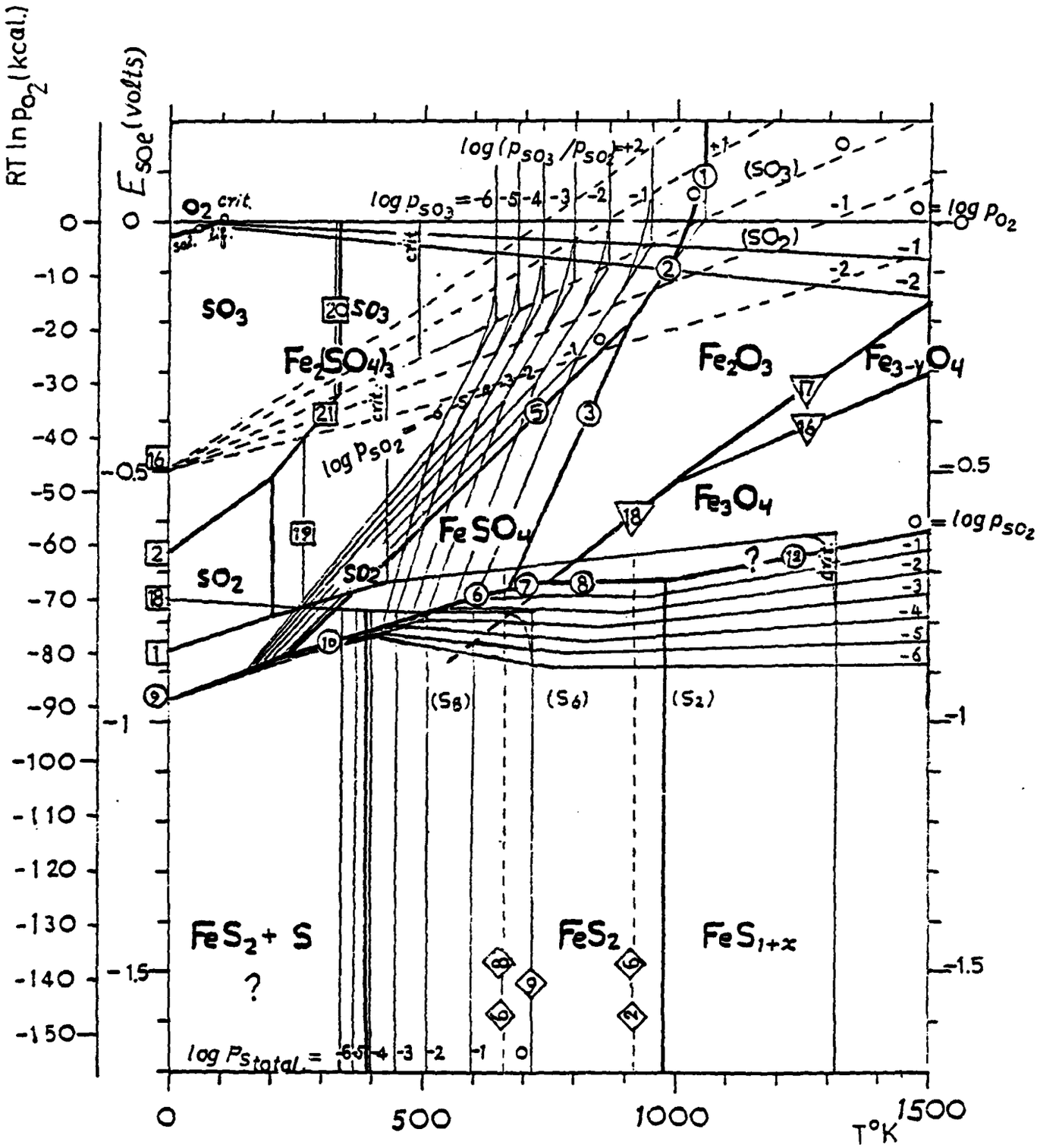

FIGURE 4 Equilibrium diagram E = f(T) for the system O-S-Fe (temperarure from zero to 1500°K, E from -1.70 to +0.20 $volt_{soe}$)

MP.2609	100884	2756

(see page 10)

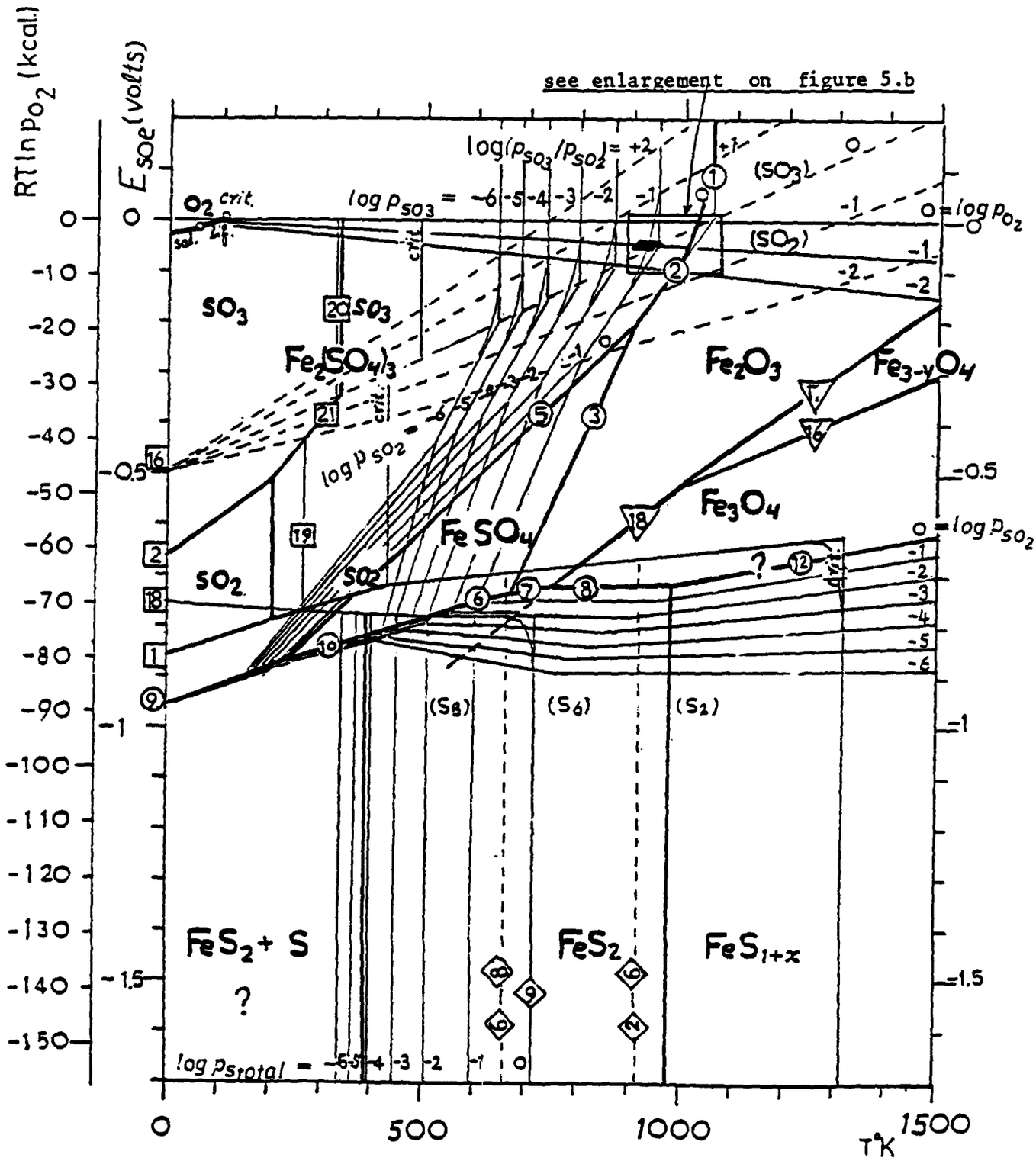

FIGURE 5a Condition of catalytic activity of Fe_2O_3 for the oxidation of (SO_2) to (SO_3) temperature from zero to 1500°K, E from -1.70 to +0.20 $volt_{soe}$

MP.2621	150884	2787

(see page 13)

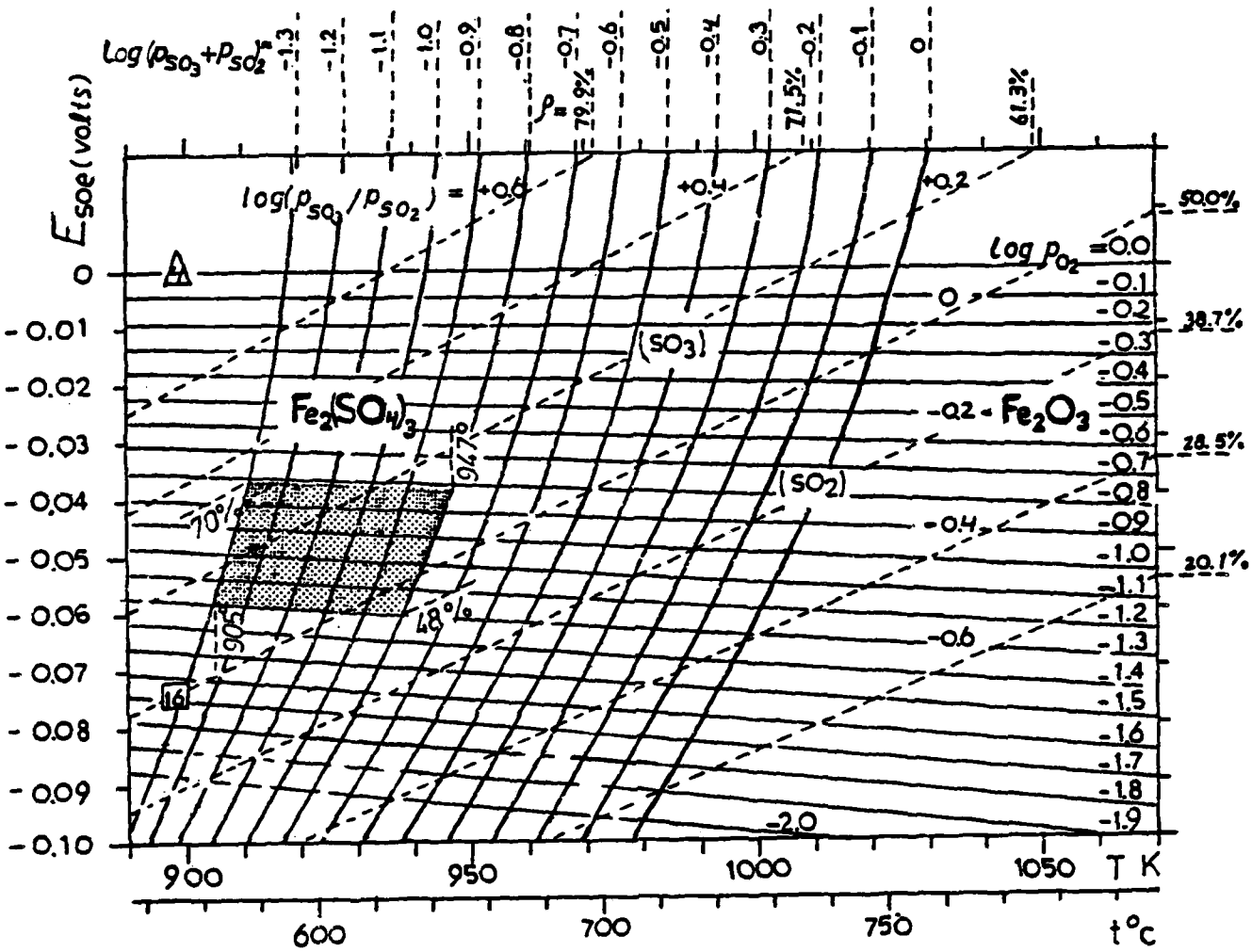

FIGURE 5b Conditions of catalytic activity of Fe_2O_3 for the oxidation of (SO_2) to (SO_3) temperature from 890°K to 1070°K, E from -0.10 to +0.02 $volt_{soe}$

MP.2621	130884	2788

(see page 13)

REPRODUCED AT GOVERNMENT EXPENSE

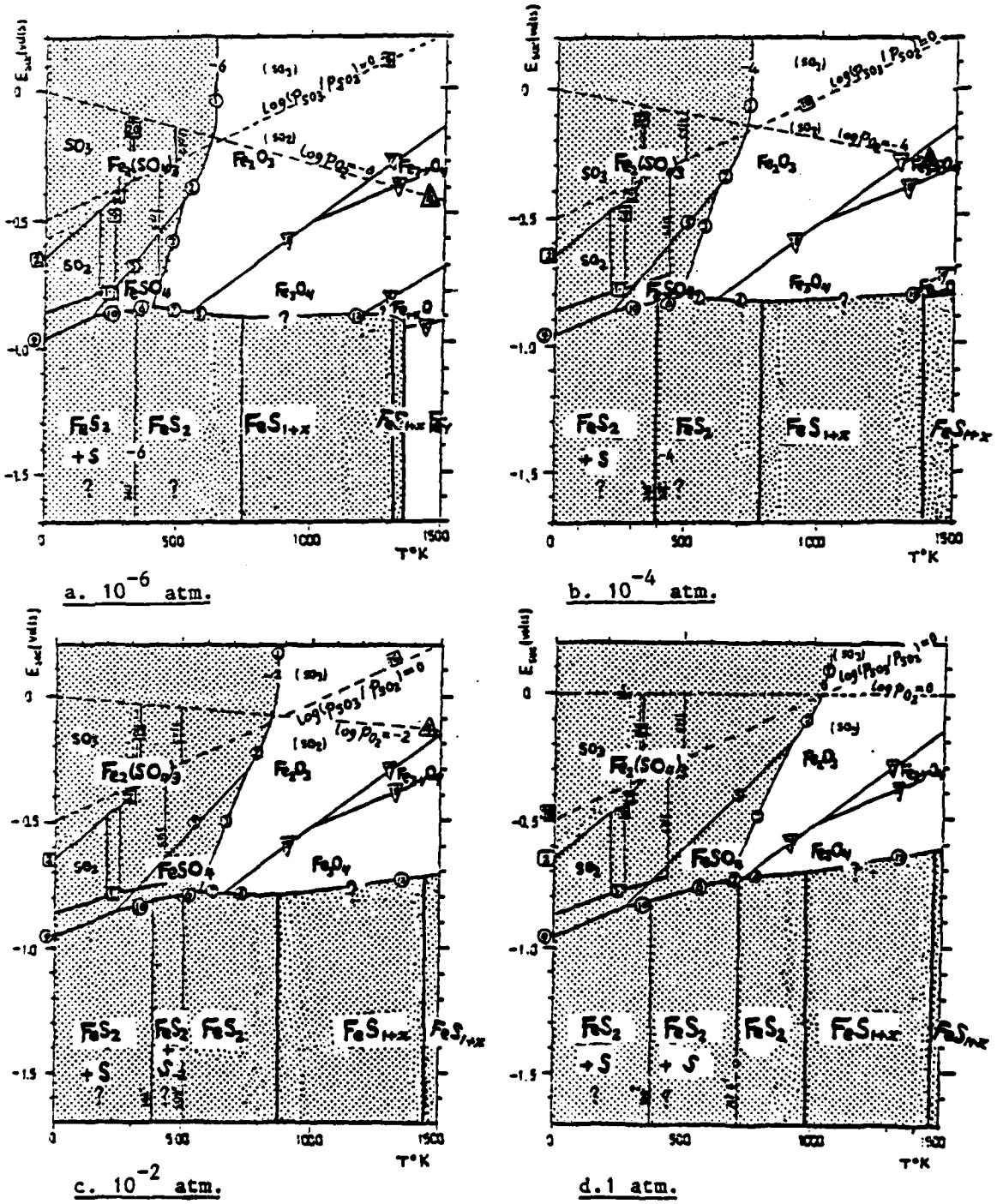

FIGURE 6 Conditions of stability of iron salts and of iron oxides and iron in the presence of dry air polluted by (SO_3), (SO_2) or sulphur vapor for different partial pressures of $(SO_3)+(SO_2)+(S_{total})$

MP.2609	200884	2757

(see page 14)

END

FILMED

4-85

DTIC