AD-A148 689 A MODIFIED MONTE-CARLO TECHNIQUE FOR THE SIMULATION OF SATELLITE COMMUNIC..(U) KANSAS UNIV/CENTER FOR RESEARCH INC LAWRENCE K S SHANMUGAN 30 OCT 84 TR-617-1 1/2

UNCLASSIFIED AFOSR-TR-84-1049 AFOSR-83-0171 F/G 12/1 NL

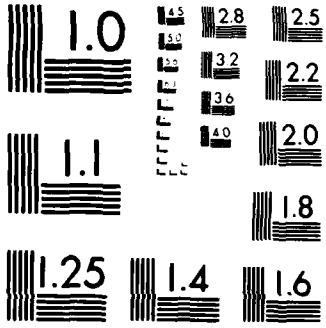

MICROCOPY RESOLUTION TEST CHART
NATIONAL BUREAU OF STANDARDS 1963 A

REPRODUCED AT GOVERNMENT EXPENSE

AD-A148 689

AFOSR-TR- 84-1049

A MODIFIED MONTE-CARLO TECHNIQUE FOR THE SIMULATION OF SATELLITE COMMUNICATION SYSTEMS

FINAL REPORT

DTIC FILE COPY

DTIC
ELECTE
DEC 10 1984
S D
E

Approved for public release;
distribution unlimited.

THE UNIVERSITY OF KANSAS CENTER FOR RESEARCH, INC.
2291 Irving Hill Drive-Campus West Lawrence, Kansas 66045

84 11 26 112

AFOSR-TR- 84-1049

A MODIFIED MONTE-CARLO TECHNIQUE FOR THE SIMULATION OF SATELLITE COMMUNICATION SYSTEMS

FINAL REPORT

AIR FORCE OFFICE OF SCIENTIFIC RESEARCH (AFSC)
NOTICE OF TRANSMITTAL TO DTIC
This technical report has been reviewed and is
approved for public release IAW AFR 190-12.
Distribution is unlimited.
MATTHEW J. KERPER
Chief, Technical Information Division

Approved for public release;
distribution unlimited.

REPRODUCED AT GOVERNMENT EXPENSE

UNCLASSIFIED
SECURITY CLASSIFICATION OF THIS PAGE

REPORT DOCUMENTATION PAGE

1a REPORT SECURITY CLASSIFICATION UNCLASSIFIED	1b RESTRICTIVE MARKINGS
2a SECURITY CLASSIFICATION AUTHORITY	3 DISTRIBUTION/AVAILABILITY OF REPORT Approved for public release; distribution unlimited.
2b DECLASSIFICATION DOWNGRADING SCHEDULE	
4 PERFORMING ORGANIZATION REPORT NUMBER(S) 617-1	5 MONITORING ORGANIZATION REPORT NUMBER(S) AFOSR-TR- 84-1049
6a NAME OF PERFORMING ORGANIZATION University of Kansas — 6b. OFFICE SYMBOL (If applicable)	7a NAME OF MONITORING ORGANIZATION Air Force Office of Scientific Research
6c ADDRESS (City, State and ZIP Code) Telecommunications & Information Sciences Laboratory, Lawrence KS 66045	7b. ADDRESS (City, State and ZIP Code) Directorate of Mathematical & Information Sciences, Bolling AFB DC 20332-6448
8a NAME OF FUNDING/SPONSORING ORGANIZATION AFOSR — 8b. OFFICE SYMBOL (If applicable) NM	9. PROCUREMENT INSTRUMENT IDENTIFICATION NUMBER AFOSR-83-0171
8c ADDRESS (City, State and ZIP Code) Bolling AFB DC 20332-6448	10 SOURCE OF FUNDING NOS PROGRAM ELEMENT NO: 61102F; PROJECT NO: 2304; TASK NO: D9; WORK UNIT NO:

11 TITLE (Include Security Classification)
A MODIFIED MONTE-CARLO TECHNIQUE FOR THE SIMULATION OF SATELLITE COMMUNICATION SYSTEMS.

12 PERSONAL AUTHOR(S)
K. Sam Shanmugan

13a TYPE OF REPORT	13b TIME COVERED	14. DATE OF REPORT (Yr., Mo., Day)	15. PAGE COUNT
Final	FROM 1/7/83 TO 31/7/84	30 OCT 84	111

16 SUPPLEMENTARY NOTATION

17 COSATI CODES			18 SUBJECT TERMS (Continue on reverse if necessary and identify by block number)
FIELD	GROUP	SUB GR	Simulation; Monte-Carlo technique; modified Monte-Carlo technique.

19 ABSTRACT (Continue on reverse if necessary and identify by block number)

Civilian and military communication networks use satellite links for digital transmission of information. The analysis of performance of digital communication systems operation over non-linear satellite channels is a difficult task and no complete analytical treatment of the problem is currently available. Several recent efforts have been directed towards the evaluation of performance as measured by the end-to-end symbol error probability using Monte-Carlo simulations. These simulations require excessively large sample sizes and are not practical for estimating low values of error probabilities.

In this report, the investigators present a technique for reducing the sample size requirements of Monte-Carlo simulation of satellite communication links. The method is based on a combination of a modified (importance) sampling technique and an extrapolation technique. Sample size reduction of the order of 100 appears to be possible with this technique.

20 DISTRIBUTION/AVAILABILITY OF ABSTRACT UNCLASSIFIED/UNLIMITED ☒ SAME AS RPT ☐ DTIC USERS ☐	21 ABSTRACT SECURITY CLASSIFICATION UNCLASSIFIED
22a NAME OF RESPONSIBLE INDIVIDUAL MAJ Brian W. Woodruff	22b TELEPHONE NUMBER (Include Area Code) (202) 767- 5027 — 22c OFFICE SYMBOL NM

DD FORM 1473, 83 APR — EDITION OF 1 JAN 73 IS OBSOLETE

84 11 26 112

UNCLASSIFIED
SECURITY CLASSIFICATION OF THIS PAGE

A MODIFIED MONTE-CARLO TECHNIQUE FOR THE SIMULATION OF SATELLITE COMMUNICATION SYSTEMS

Accession For	
NTIS GRA&I	☒
DTIC TAB	☐
Unannounced	☐
Justification	
By	
Distribution/	
Availability Codes	
Dist	Avail and/or Special
A-1	

Final Report

By

K. Sam Shanmugan

Project #AFOSR-83-0171/CRINC-6170

Air Force Office of Scientific Research

TISL Technical Report #617-1

September, 1984

TELECOMMUNICATIONS AND INFORMATION SCIENCES LABORATORY
THE UNIVERSITY OF KANSAS CENTER FOR RESEARCH, INC.
2291 Irving Hill Drive - Campus West Lawrence, Kansas 66045

ABSTRACT

In the design and analysis of a digital satellite communications system there is an acute need to have the ability to predict the system's bit error rate (BER). After defining the ideal performance prediction tool, those that have been proposed or are now in use are examined and all are seen to fit into one of two general categories: The analytical methods and the Monte Carlo simulation-based approaches. A comparative review of these predictors is presented. All are found to fall short of the ideal although the simulation-based estimators are much closer than any of the analytical ones. The best performance prediction tools are seen to be an application of importance sampling to Monte Carlo simulation proposed by Shanmugam and Balaban and a graphical extrapolation method proposed by Weinstein that entails linearization of the tail of the output signal's pdf. A new predictor is proposed that combines the techniques of Shanmugam and Balaban with those of Weinstein in an attempt to utilize the advantages of each. This Modified Extrapolation technique is then evaluated and found to be better than Weinstein's method but just slightly worse than the importance sampling approach for a system BER = 10^{-6} with a normalized error $\epsilon = 0.1$. At smaller BERs, the structure of the proposed technique indicates that it will again be superior to Weinstein's approach and that it will even become better than Shanmugam and Balaban's method.

This page is intentionally blank.

TABLE OF CONTENTS

	Page
ABSTRACT	i
ACKNOWLEDGMENTS	ii
LIST OF FIGURES	iv
LIST OF TABLE	v
1.0 INTRODUCTION	1
2.0 STATEMENT OF THE PROBLEM	6
2.1 The System	6
2.2 Probability of Error Estimation	12
2.3 A Discussion of the Problem	16
3.0 SURVEY OF THE PREVIOUS WORK	21
3.1 The Analytical Methods	22
3.1.1 Approaches to Linear Systems with ISI and Additive Noise	31
3.1.2 Approaches to Nonlinear Systems with Additive Noise Only	47
3.1.3 Nonlinear Systems with Uplink Noise and ISI	67
3.2 Monte Carlo-Based Simulations	72
3.2.1 The Semi-Analytical Approach	74
3.2.2 The Extreme-Value Theory/Tail Probability Approaches	76
3.2.3 The Importance Sampling Approach	83
4.0 PROPOSAL AND EXAMINATION OF A PERFORMANCE PREDICTION TOOL	89
4.1 The Proposal	90
4.2 Evaluation of the Proposal	93
4.2.1 Variance Calculations	95
4.2.2 Performance Comparisons	102
5.0 SUMMARY AND CONCLUSIONS	105
REFERENCES	107

This page is intentionally blank.

LIST OF FIGURES

		Page
Figure 1.	Typical Satellite Communications System	7
Figure 2a.	Typical TWTA AM-AM Characteristic . .	10
Figure 2b.	Typical TWTA AM-PM Characteristic . .	11
Figure 3.	Bandpass PSK System	23
Figure 4.	Linear System with Additive Noise & ISI	33
Figure 5.	QPSK Probability Space Diagram	40
Figure 6.	Bandpass Nonlinearity with Noise . . .	49
Figure 7.	Davisson and Milstein's Limiter Characteristic	51
Figure 8.	Extreme-Value Theory Sample Diagram	79
Figure 9.	Plot of Modified Monte Carlo Simulation Results from [45]: Sample Size Ratio vs. $P_M(e)$	98

This page is intentionally blank.

LIST OF TABLE

Page

Table 1. Comparison of Sample Size Requirements 104

This page is intentionally blank.

1.0 INTRODUCTION

A typical digital satellite communications system consists of two earth stations and a channel containing an uplink, a downlink, and the satellite transponder. In the process of designing such a system, it is absolutely essential that the designer have the capability to predict its performance under conditions similar to those that will be encountered during actual operation. Having a performance prediction tool allows the comparisons of various filters, modulation schemes, amplifier operating points, etc., in the quest for a "best" system to fit the design criteria. Further, the tool permits the determination of a system's sensitivity to perturbations such as phase imbalances, linear and nonlinear (AM-AM, AM-PM) distortions, and time, phase, and frequency jitter.

While predicting the performance of the typical satellite system involves the determination of several different performance indices, perhaps none is quite so useful and important as the symbol, or bit, error probability [P(e)]. Commonly known as the bit error rate (BER), this parameter is the prevalent one used to make qualitative and quantitative evaluations of the performance of digital communications systems. When operation is over a linear, Gaussian channel with no bandwidth restrictions, calculation of the error probability of a system is a very straightforward and easy task [1].

Performance prediction, however, is an attempt to determine how well a realistic system will perform. In digital satellite communications this means taking into consideration the facts that the channels used are frequently

bandlimited and often nonlinear, as is the case when a travelling-wave tube amplifier (TWTA) is operated near its saturation point. The bandlimiting causes the modulated pulse to suffer some spreading across time thus introducing intersymbol interference (ISI). In addition, the channel noise is occasionally non-Gaussian. With a system having any of these characteristics, the task of calculating the BER performance is quite difficult.

Finding a solution to this problem is a matter of finding, or creating, an acceptable prediction tool. In order to meet the requirements stated earlier, the tool must be very flexible with regards to system configurations and components. On the other hand, it is obvious that the tool should produce accurate results without an unreasonable computational and analytical burden. Unfortunately, these two requirements have proven to be unreconcilable [2]. Out of these requirements have grown the two techniques that form the basis for all performance prediction tools. Monte Carlo simulation is an approach in which the system is modeled in a component by component (building blocks) manner with the simulation being run in the time domain and the noise treated as a vector of random samples. This can be used to model the performance of any system, with any configuration, to any desired accuracy. However, due to the extremely low bit error rates seen in satellite systems, typically on the order of 10^{-6}, the time involved to produce reliable results is often unacceptable because of large sample size requirements. On the other hand there are purely analytical methods that can quickly produce acceptably accurate results using one or more integrated mathematical models of the system. However, the assumptions needed to derive analytically tractable results are often too restrictive, thus limiting application to a few easily characterized systems.

It is well known that the primary causes of detection error in digital communication are thermal noise, typically additive white Gaussian noise (AWGN), and the intersymbol interference that arises in the communications channel. Calculating the error probability for a satellite system, therefore, is equivalent to finding a prediction tool that will account for the effects of noise and ISI on the signal. This means taking into consideration the effects of the nonlinearly transformed uplink noise and ISI in addition to those of the ISI and noise arising on the downlink. Further, the tool must all the while incorporate the conflicting requirements of speed and flexibility mentioned previously.

Over the past two decades, a considerable amount of work has been done towards solving the various parts of this problem. There have been analytical approaches [3]-[30], [47], approaches based on Monte Carlo simulations [31]-[46], and even a hybrid approach, but as of yet, there does not seem to be a clear understanding of the overall effect that uplink noise and intersymbol interference preceding a nonlinearity have on the BER.

Almost all of the early work, and the vast majority of what has been done so far, can be placed into the realm of the analytical techniques. A great amount of effort has been given to the study of the effects of ISI on the BER performance of a system but, in general, either a linear channel has been used [3]-[13] or if a nonlinear channel has been assumed, then the uplink noise has been either ignored or considered to somehow bypass the nonlinear transformation. Another body of work has been concerned with the effects of uplink noise passing through a nonlinearity [14]-[24], however, the signal is presumed to be wideband (no ISI) and the nonlinearities are treated as hard- or soft-limiters. Some [25]-[26] have merely developed characterizations of typical

nonlinearities and of those few that have dealt with both ISI and uplink noise preceding a nonlinear transponder [27]-[30], most have used just some form of limiter and not a more realistic transponder model.

With the growth of the satellite field bringing more stringent design specifications, there has been a realization that the flexibility inherent in Monte Carlo simulation is more important than the inherent speed of the analytical methods. Coupled with the ability of simulation to achieve any level of accuracy desired, this technique is seen to be a more powerful and desirable one than performance prediction using purely analytical methods. Since it has been shown [31]-[37] that Monte Carlo techniques can be used to deal with intersymbol interference in the absence of uplink noise, the prediction via simulation problem boils down to that of how to consider the effects of the uplink noise without taking an unacceptable amount of computational time to do so. Modification to the noise statistics via importance sampling [43]-[46] is one approach that has been taken to reduce the amount of run time. Another involves the estimation of the tail probabilities of the output signal level using either extreme value distribution theories or those of asymptotic approximation [38]-[42].

As far as the hybrid technique goes [2], it merely consists of using a mathematical model for the nonlinearity while retaining the Monte Carlo model for the rest of the system. This has the flexibility problem of any analytical method in that a highly accurate model of the nonlinearity eliminates the ability to compare differing transponder configurations and components.

The remainder of this thesis is divided into four parts. In the next section, a review of the ideas that form the basis of system error performance prediction and its importance is presented. Chapter 3 examines the status of performance

prediction through a discussion of the methods mentioned in the preceding paragraphs. An analytical examination of a potential prediction tool's effectiveness is conducted in Chapter 4 and the implications and conclusions of the study are presented in the final section.

This page is intentionally blank.

2.0 STATEMENT OF THE PROBLEM

A typical satellite communications channel is a bandpass system with a center frequency in the 4-20 GHz range and a bandwidth of 500 MHz. For notational convenience in discussing this system, we shall make use of the well-known fact that a bandpass system can be modeled by an equivalent baseband system through utilization of the concept of the complex envelope representations of bandpass signals. This modeling is effective, of course, only if the performance of the system does not exhibit frequency dependence above and beyond that of atmospheric attenuation, fading, etc. Since the prediction of the bit error probability in digital communications is almost entirely dependent on determining the effects of noise and intersymbol interference, both of which are easily modeled in the baseband with no loss of generality, we are free to use a baseband equivalent system in all future discussions. Consequently, Figure 1 presents a generalized model of the typical satellite communications system of this study. It should be noticed that the notation used in Figure 1 and in the following paragraphs adheres closely to that of Shanmugam and Balaban in [45].

2.1 The System

The system being modeled is seen to represent a dedicated, single carrier per transponder configuration that can easily be thought of as simulating time-division multiple-access (TDMA) techniques. Of the five functional areas into which the system is grouped, the first to be seen by a user is the

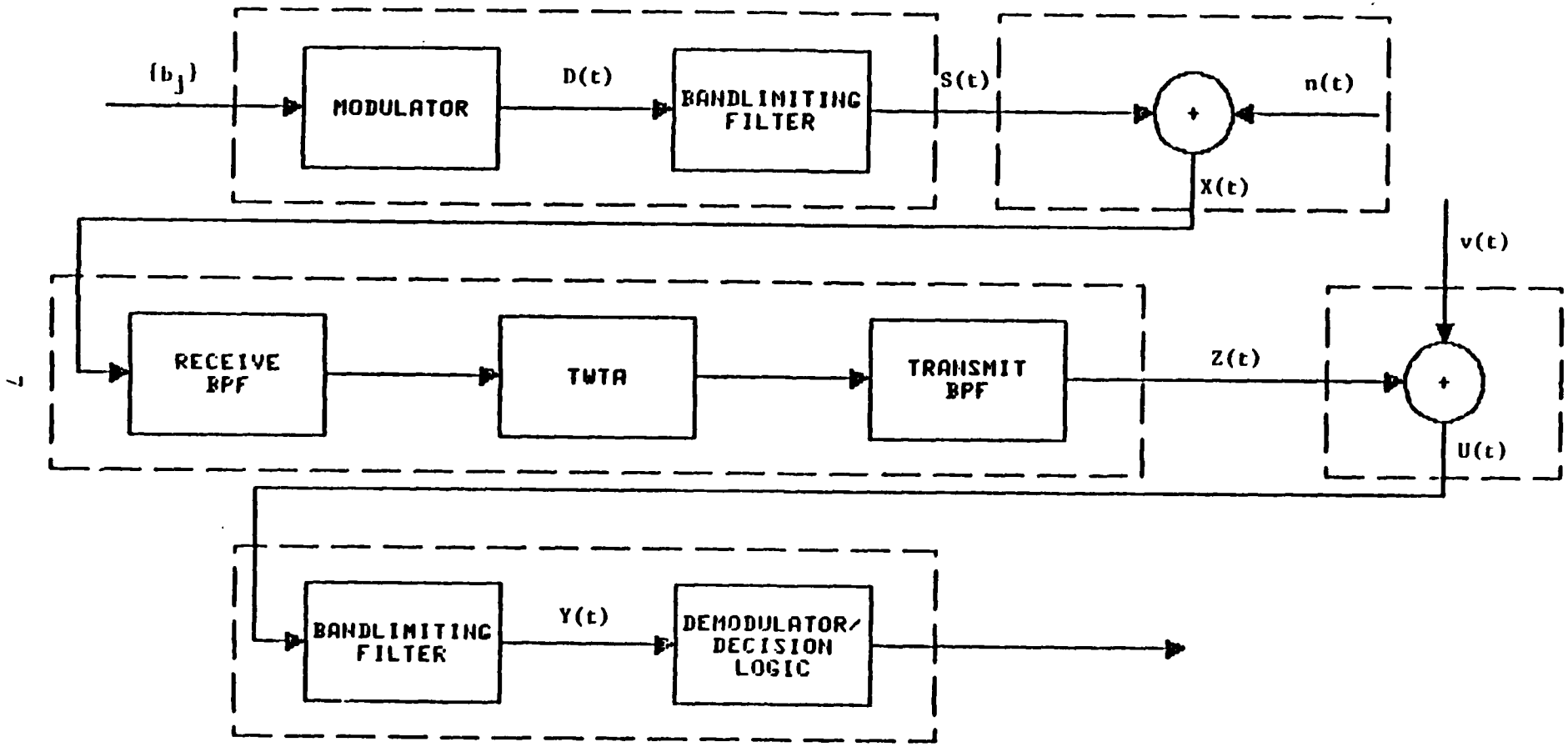

Figure 1 - Typical Satellite Communications System

transmitter, consisting of the modulator and a bandlimiting filter. The filter is a conglomerate representation of the various stages of filtering encountered in an actual transmitter, such as those for pulse-shaping (a function that is performed entirely in the transmitter in most satellite systems) and for fitting the signal to the FCC transmission mask. "Bandlimiting" simply indicates that the filter has the narrowest bandwidth (and therefore, smallest bandwidth-signal pulse time (BT) product) of any in the system and that all significant ISI arises at this filter.

Following the transmitter is the section of the system known as the uplink. This is a representation of the effects of transmitting a signal through the earth's atmosphere to the communications satellite. Under normal operating conditions, this functional area within the system may be characterized as a linear channel, or filter, with additive Gaussian noise at the output. Since the downlink part of the system is a duplicate of the uplink, it can be characterized in the same manner. Sandwiched between the earth-satellite links is that group of components that are comprised by the satellite transponder. This group consists of two, almost identical filters, one acting as the transponder receive filter with the other filling the role of the transmit filter, and a travelling-wave tube amplifier. Due to the wide variety of modems that are used in the earth stations (i.e., the lack of standardization of telecommunications/data communications equipment), the filters are required to perform their duties yet be compatible with most earth stations. In addition, the unique circumstances entailed by satellite operation require that the filters be very dependable while economic factors require minimization of the cost of the system. Hence, the filters are as nearly identical as possible, relatively wideband in nature, and perform their functions--restricting the effective bandwidth of the uplink noise for one and eliminating any

out-of-band signals created by the TWTA for the other--without introducing any time dispersion or other significant signal degradation. It is at this point in the system that all of the nonlinear operation is introduced. Although the high power amplifier (HPA) used to boost the level of the transmitted signal is frequently operated in its nonlinear region, the effect of the TWTA is dominant and, in any case, suffices to address the problem of predicting the performance of a typical satellite system.

In Figure 2 the input-output curves for a typical TWTA are shown. Although there is a linear region of operation, it is easy to see that maximum power output, and thereby maximum downlink E_b/N_o (energy per bit/noise power spectral density), is achieved when operation is in the nonlinear region. For this study, the TWTA shall be considered to operate always at saturation as is usually the case in realistic TDMA systems. Looking past the transponder one sees the downlink, already noted as being identical to the uplink, and the final section of the system, the receiver. This section is a mirror image of the transmitter with two important exceptions. First, the composite receive filter is similar in function to the transmit filter but does not bandlimit the signal quite so much therefore introducing less ISI, and second, there is obviously some form of sampling and decision logic integrated with the demodulator. Thus, the receiver input is filtered to restrict its bandwidth and then passed through the demodulator/decision logic from which the information reaches its destination.

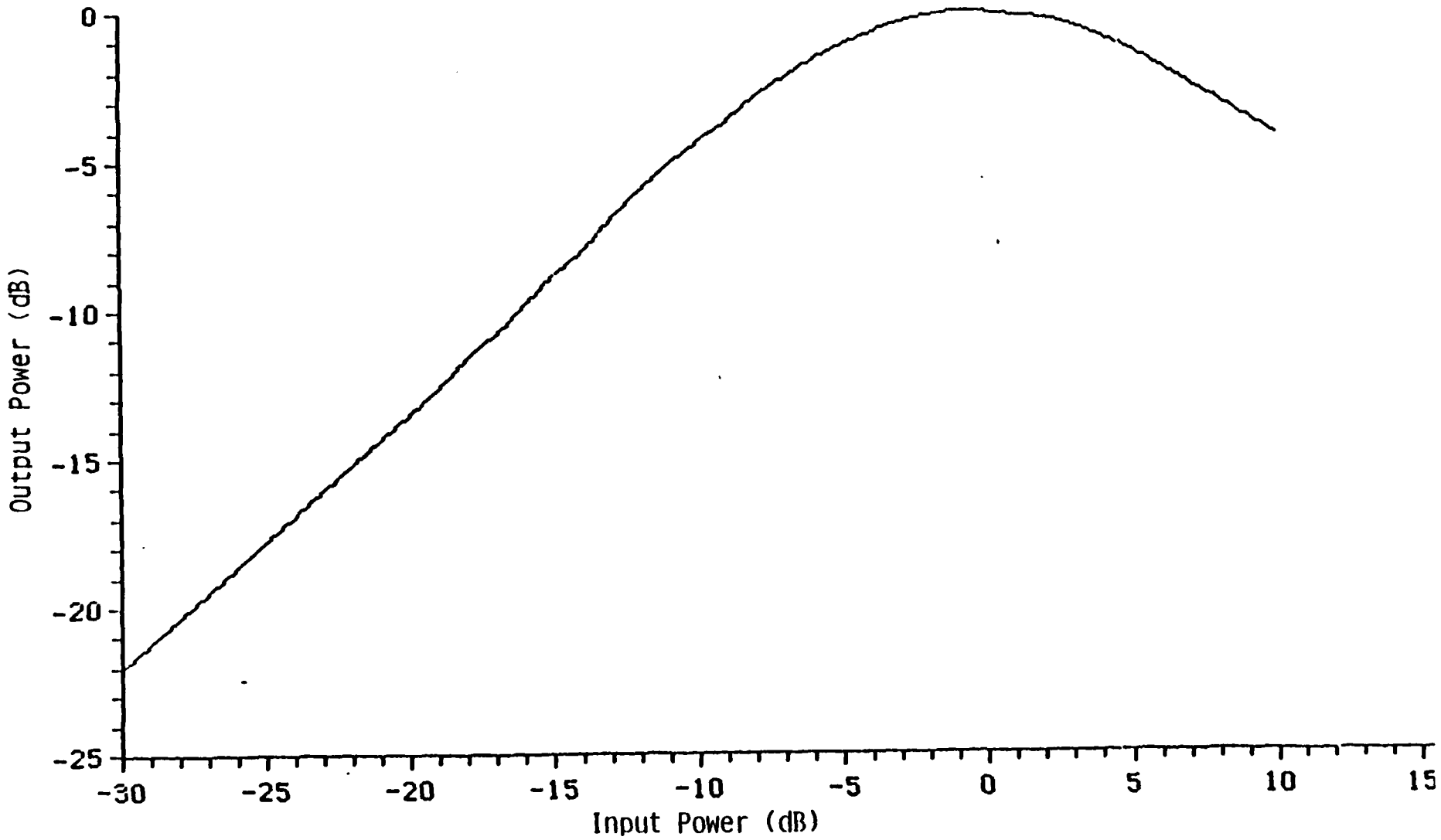

Figure 2a - Typical TWTA AM-AM Characteristic

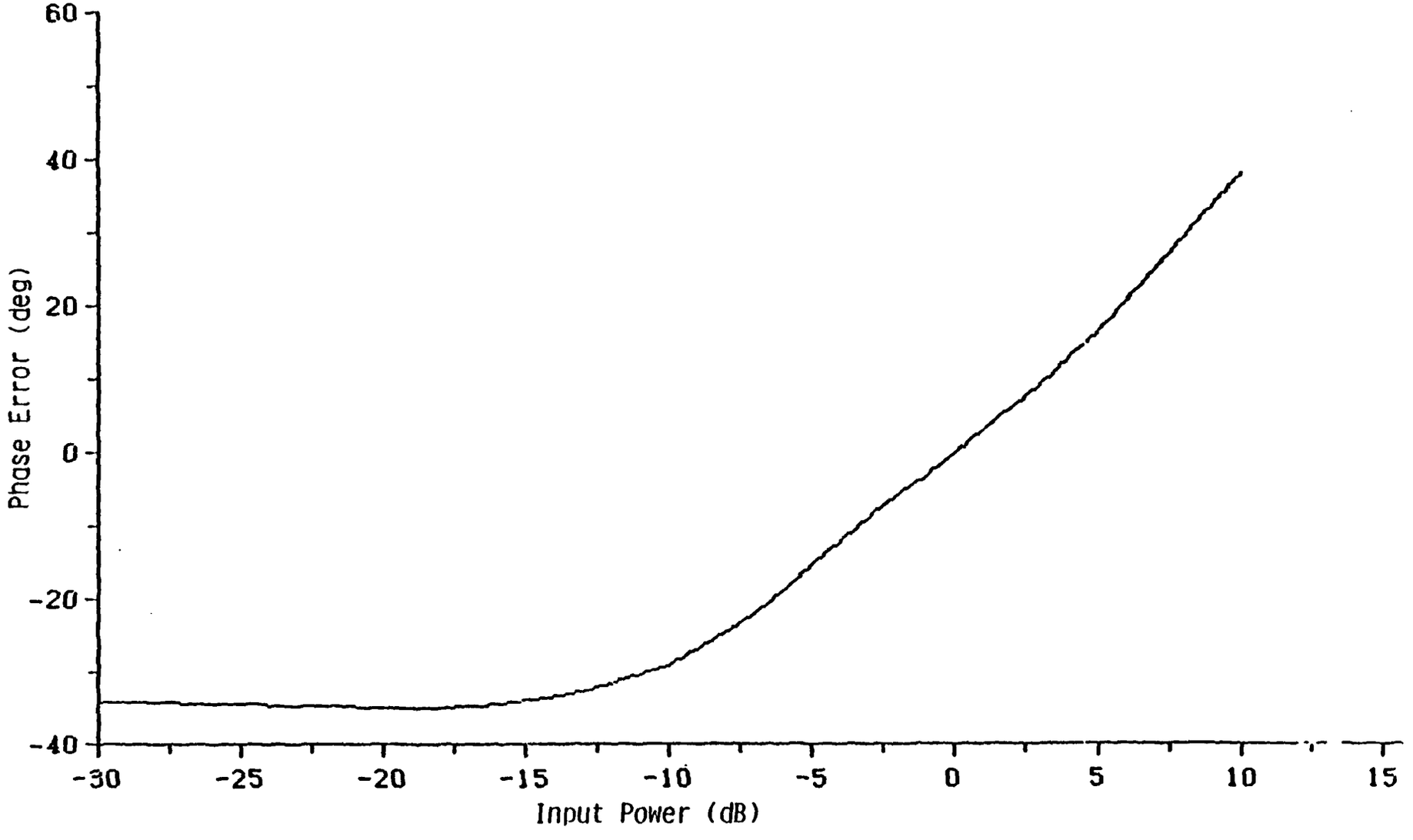

Figure 2b - Typical TWTA AM-PM Characteristic

2.2 Probability of Error Estimation

Now suppose that one wishes to estimate the probability of error for the system just described. We will only look at the case of binary pulse amplitude modulation (PAM) since this reduces the complex envelope to a real signal and is sufficient for illustrative purposes. It can be assumed that the input to the system is a sequence of binary dat- $\{b_j\}$ having a bit duration of T_b. Following modulation, the input to the transmit filter has the general form

$$D(t) = \sum_k a_k \mathrm{rect}(t-kT_b) \tag{1}$$

$$\mathrm{rect}(t-kT_b) = \begin{cases} 1 & kT_b < t < (k+1)T_b \\ 0 & \text{elsewhere} \end{cases} \tag{2}$$

where the rect(t) pulse was arbitrarily chosen for computational ease and $\{a_k\}$ is the modulating amplitude sequence with $a_k = -A$ or $+A$ when $b_k = 0$ or 1 respectively. With the transmit filter assumed to have the transfer function $h_t(t)$ and the impulse response

$$H_t(t) = h_t(t)\cos \omega_o t, \tag{3}$$

the transmitter output, S(t), can be expressed as

$$S(t) = \sum_k a_k p(t-kT_b) \tag{4}$$

and

$$S(kT_b) = a_k p(0) + \sum_{m \neq k} a_{k-m} p[(k-m)T_b] \tag{5}$$

where p(t) is the shaped, bandlimited signal pulse

$$p(t) = 0.5[\mathrm{rect}(t) * h_t(t)] \tag{6}$$

In equation (5), the first term on the right represents the k-th transmitted bit while the summation represents the residual effect of all other transmitted bits. This second term represents the ISI that is caused by the bandlimiting filter. As it passes through the uplink, the signal S(t) is corrupted by noise, n(t), that can be modeled by a zero-mean Gaussian random process. Representing the thermal noise that degrades the signal in the uplink, n(t) is additive in nature, and hence the transponder input, X(t), can be expressed by

$$\begin{aligned} X(t) &= S(t) + n(t) \\ &= \sum_k a_k p(t-kT_b) + n(t) \end{aligned} \tag{7}$$

Passing through the filtering and nonlinear transformation of the transponder, the signal as it enters the downlink is described by

$$z(t) = f[X(t)] \tag{8}$$

where f(x) is the input-output relationship of the transponder. It is beyond this point that the probability of error can be seen to have been rendered very difficult to track analytically since the statistics of both the uplink noise and the ISI have been altered. In fact, the alteration is frequently such that it is impossible to separate the effects the two have on the information-bearing part of the signal.

Within the downlink, the signal is again corrupted by a random process representing AWGN, $v(t)$, so that the input to the receive filter, $U(t)$, has the form

$$U(t) = Z(t) + v(t). \tag{9}$$

If the transfer function of the receive filter is assumed to be $h_r(t)$ with the impulse response

$$H_r(t) = h_r(t)\cos \omega_o t, \tag{10}$$

then

$$\begin{aligned} Y(t) &= 0.5[U(t) * h_r(t)] \\ &= 0.5 \left([Z(t) * h_r(t)] + [v(t) * h_r(t)]\right) \\ &= \sum_n Z'(t-nT_b) + v'(t) \end{aligned} \tag{11}$$

is the filtered input to the demodulator and decision logic. It is easy to see the complications in predicting the system BER if one notes that (11) contains ISI that comprises the effects of a nonlinear transformation of the desired signal + noise + transmit filter ISI. For reasons that shall become obvious, we will assume that the statistical properties of the system inputs, $n(t)$ and $v(t)$, as well as the system transfer characteristic--four filter transfer functions and the TWTA transfer characteristic--are known.

At this stage, one is confronted with the actual attempt to estimate the BER, or $P_2(e)$, for the system. This quantity is given by

$$\begin{aligned} P_2(e) = &\{\int_{\kappa}^{\infty} q_{Y|b_k=0}(y)dy\}Pr[b_k=0] \\ &+ \{\int_{\infty}^{\kappa} q_{Y|b_k=1}(y)dy\ Pr[b_k=1] \end{aligned} \tag{12}$$

where κ is the decision threshold (typically 0 for the system modeled by Figure 1) and $q_{Y|b_k}(y)$ is the conditional probability density function of the output Y, given the input b_k. The performance prediction problem is thus seen to be that of estimating the two conditional pdf's. This task is made quite difficult by the nonlinear transformation that has altered the statistics of the transmitted signal and the uplink noise. Additionally, an analytical approach is inherently inflexible; there is no room for "black-box" modeling of the system and its components; and is rendered somewhat inaccurate by the need to approximate the effects of the system nonlinearity and the ISI. On the other hand, Monte Carlo simulation estimates the pdf's by what is essentially the creation of two histograms. This allows for great flexibility and the achievement of any level of accuracy desired--although the effects of ISI must still be approximated by a finite number of pulses. There is a price that is paid for the accuracy, however. When there is a random process preceding the TWTA, such as uplink noise, enough samples must be examined to allow the process's statistics full reign; this number is on the order of 10/P(e) [44]. Since a typical BER for a satellite system is one error out of every 10^6 symbols, Monte Carlo methods require about 10^7 symbols and hence, an unacceptably large amount of computational time.

Obviously, the main difficulty in the estimation of the probability of error arises due to the fact that intersymbol interference and, more importantly, noise occur prior to the nonlinear amplifier. Just what effects this has and why it is difficult, and necessary, to handle will be discussed in the next section.

2.3 A Discussion of the Problem

In an ideal digital communications system, the pulse-shaping filters are assumed to be ideally matched thus eliminating any possibility of the occurrence of intersymbol interference. Even when the filters cannot be matched, as in the typical satellite communications case where lack of standardization forces all pulse-shaping to be done at the transmitter, the vast majority of the ISI can be eliminated through the usage of a good equalizer--if the channel and filter characteristics are known exactly. Since that condition is impossible to meet, there will always be some ISI in a real, bandlimited system; there has, in fact, been a great amount of work done exclusively on the problem of determining the effect of the ISI on a system's performance [3]-[15]. Most of the work already done, however, has dealt only with linear channels (with additive Gaussian noise, of course) and without this restriction the solution to the problem has not been easily found.

ISI, the time-dispersion of a signal pulse's energy that causes the amplitude of a signal at any given moment to be dependent on several different pulses, combines with thermal noise to be the primary causes of errors in a digital system. In a linear channel with linear filters, the ISI has an effect similar to that of noise but non-Gaussian in nature. The exact analysis of the joint effects of noise and intersymbol interference involves the computation of a very complex probability distribution [4],[5]. For practical systems, in fact, an exact analysis can seldom be carried out [6].

With a little thought, it can be seen that the nonlinear characteristic of the typical satellite channel changes the "seldom" of the preceding sentence to "probably never." A nonlinear transformation of the uplink ISI changes its statistics.

As a result, only some of the ISI can be removed by the matched filter at the receiver. If we assume that ISI arises on the downlink as well, then the analytical problem becomes even more of a mess and attempts at finding anything other than bounds quickly become hopeless.

There are ways to approximate the effects of intersymbol interference. Analytically, one can find worst-case, best-case bounds, or, using various series expansions, one can find somewhat tighter probability of error bounds. These are, however, still bounds and not the fairly accurate estimations that are desired. A way does exist to achieve a fairly accurate estimate of the effects of ISI: The enumeration of all possible values the interference can have and the subsequent averaging of the P(e) for each value. While this can be done analytically, the enumeration method tends to be very cumbersome in most cases (even with the finite number of interfering pulses that must be assumed), and is much better suited to simulation. Studies have been made that show enumeration in conjunction with Monte Carlo simulation to be quite adequate in estimating the effects of ISI on system performance.

Since the argument has already been made convincing us of the desirability of simulation over the analytical methods as a performance prediction tool, we can consider the question of how one determines the effects of ISI on the system BER to be answered via enumeration. That leaves only the uplink noise as a major stumbling block in specifying a prediction tool for use in designing satellite systems. In many of the early communications satellites, enough power was broadcast from the transmitter to make the uplink E_b/N_o significantly larger than that of the downlink. This situation meant that only a very insignificant number of errors were caused by the uplink noise. Thus, the methods that have been developed to estimate the BER have been able to assume that all of the

thermal noise affecting a system arises at the input to the receiver. Alternately, if the TWTA could be considered to be operating in its linear region to avoid intermodulation (as was the case for most of the early, multi-carrier, frequency-division multiple access (FDMA) satellites), the uplink noise was combined with the downlink noise either linearly or in some other mathematically simple manner. This approach tended to yield the same effective result as did ignoring the uplink noise entirely.

In the past few years, however, the number of satellites and users has grown dramatically while the usable spectrum has not. More and more, the multiple access technique of choice and necessity is TDMA. This allows the transponder to be operated at a much more power-efficient, albeit nonlinear, level. Operating the TWTA in its nonlinear range means that, if the uplink noise is significant at all, the $(E_b/N_o)_u$ cannot be directly combined with the $(E_b/N_o)_d$ with any hope for accuracy--and the uplink noise is frequently significant. The necessity of using TDMA now is that the increased number of satellites, and hence, proximity, require that less power be broadcast to each satellite to avoid interfering with transmissions to nearby satellites. Additionally, there has been a virtual explosion in the number of small earth stations that are being used, thus compounding the interference problem and requiring an even larger reduction in the transmitted power. This reduction in transmit power has been great enough that $(E_b/N_o)_u$ is now of roughly the same order as that for the downlink thereby necessitating its consideration as a major cause of error.

The nonlinear transformation does more than just preclude the direct combination of uplink and downlink E_b/N_o's. It forces one who is taking an analytical approach to the problem to calculate the nonlinearly transformed pdf of the noise at

the output of the TWTA; aside from being a rather difficult undertaking in and of itself, it is easy to see that the pdf will be heavily dependent upon the characteristic of the particular nonlinearity thereby placing severe limitations on the flexibility of the method used as a performance prediction tool. In addition, most of the work that has been done on this problem has either ignored the existence of intersymbol interference [14]-[26] and/or has treated the TWTA nonlinearity as some kind of limiter [27]-[30].

It is obvious that the ISI and the uplink noise must both be considered if one wishes to derive an accurate estimate of a system's BER. Passage through the TWTA causes the two to "freeze" one another into the signal in such a way that the individual effects cannot be separated from each other or from the information-bearing part of the signal. The difficulties of using analytical methods on either of the effects standing alone has already been stated. Together, the inevitable conclusion is that the analytical methods will be inadequate.

Monte Carlo simulation encounters its own problems when dealing with the uplink noise, although handling the ISI as well as the uplink noise is not one of them. As mentioned previously, a typical satellite system BER is on the order of 10^{-6} meaning that least 10^{7} bits need to be run through the simulation to give an accurate error count. The computational time involved in handling this number of bits makes regular Monte Carlo simulation unacceptable as a performance prediction tool.

It immediately becomes obvious that there is a need for some modification of the basic Monte Carlo methods that will greatly reduce the number of samples required to acquire a good estimate of the BER of a communications system. In the following chapters, a look at many of the previous attempts at developing some form of performance prediction tool

(analytical or simulation) will be presented followed by a study of two techniques that appear to hold the greatest promise of solving the problem. In addition, a combination of these two techniques will be studied to determine what is the best performance prediction tool existing at this time.

This page is intentionally blank.

3.0 SURVEY OF THE PREVIOUS WORK

From the previous discussions we know that the main causes of detection error in a digital communications system are intersymbol interference and additive noise. When a system is afflicted by the two of these together, exact estimation of the error probability becomes computationally complex. If, further, a typical satellite system such as that shown in Figure 1 is considered, one is faced with the situation where the transmitted signal is corrupted by ISI and noise prior to passing through a TWTA operating in its nonlinear region. In addition, before the decision logic is reached, the signal is corrupted by even more ISI and additional noise. Under these circumstances, it is easy to imagine that the already quite complex task of estimating the system BER becomes almost impossible.

The necessity of having a performance prediction tool, however, is such that a large number of approaches towards solving the error estimation problem have been developed. It has been mentioned previously that there are, primarily, two categories into which the various prediction tools may be classified. These categories are the result of the fact that there are two unreconcilable requirements that an ideal performance predictor should meet. The first of the requirements is that the prediction tool be very flexible with regard to the system components, configuration, modulation formats, etc. This has led to the growth of Monte Carlo simulation, in which the system is just a set of "black boxes" that can be arranged in any desired manner and, further, the signals that enter the system are treated as random processes. The second requirement is that the performance prediction tool

deliver answers speedily and with a great deal of accuracy. An obvious outgrowth of this requirement has been the development of various analytical methods that attempt to develop a unified deterministic system model with a set of parameters from which the performance can be calculated.

While there are some hybrid methods that employ characteristics of each of the aforementioned techniques, the vast majority, if not all, may be placed into either the simulation category or the analytical methods category. With this in mind, the following sections will provide a description of the fundamentals of each different type of approach taken in the attempt to find an "ideal" performance prediction tool. A synopsis of the advantages and disadvantages accruing from each approach shall also be presented. Most of the literature reviewed, it will probably be noted, is specifically applicable to some type of phase-shift-keyed, (PSK), system. Done primarily because of the pervasiveness of PSK as a modulation format, there is no loss of generality in the analyses presented as, on careful consideration, one realizes that almost any modulation format can be expressed via PSK. In the following, the use of PSK as the operational modulation of discussion will be adopted.

3.1 The Analytical Methods

In Figure 3, a modified version of the digital satellite communications system model shown in Figure 1 is presented for use in discussing the various analytical approaches taken towards solving the problem of accurately predicting a system's BER. Although the two models are essentially the same, the signal representations of Figure 1 have been changed to accommodate the fact that Figure 3 is meant to represent

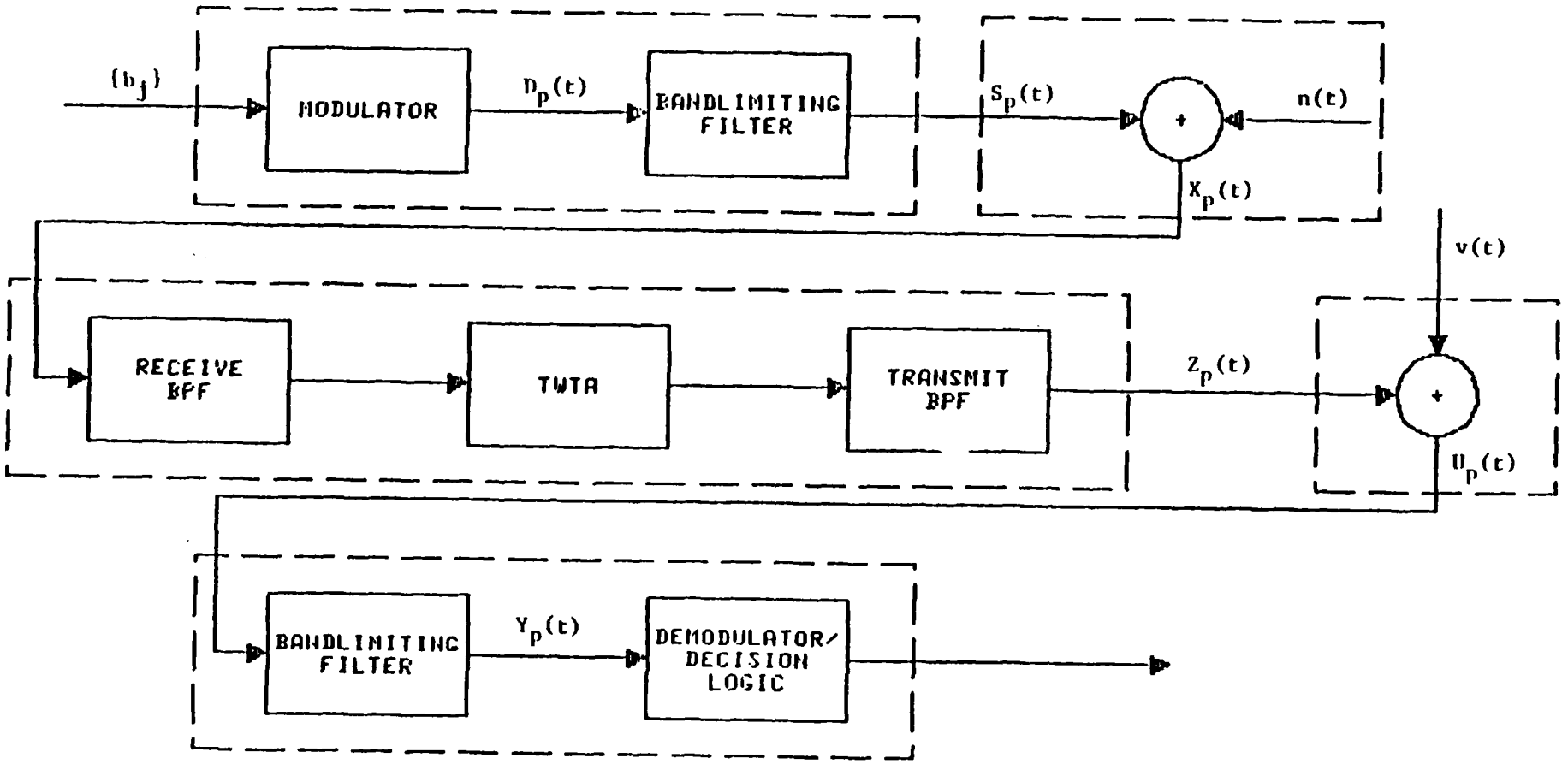

Figure 3 - Bandpass PSK System

a bandpass PSK system similar to those discussed in the literature. Consequently, a brief run-through of the system's operation is in order.

An M-ary PSK system operates by modulating its carrier with the phase sequence $\{\phi_i\}$ where each transmitted phase ϕ_k is assumed to take one of M equally probable values, typically

$$\phi_k = \frac{\pi}{M}(1+2\ell) \qquad \ell = 0,1,\ldots,M-1 \quad (M \text{ even}) \tag{13}$$

If one assumes that the input to the system is binary data, then each phase angle ϕ_k can be considered as representing an m bit data symbol where $M = 2^m$. Accordingly, the symbol duration is T_s with $T_s = mT_b$ where T_b is the bit duration.

Keeping this information in mind, we shall proceed to describe and follow an M-ary PSK signal as it passes through the system of Figure 3. A phase modulated signal may be thought of in one of two ways: Either as a constant amplitude carrier to which the sequence $\{\phi_k\}$ has been added, or, as two amplitude modulated carriers with one of the carriers delayed 90° relative to the other. In the former case, the signal at the output of the modulator, $D_p(t)$, would be written

$$D_p(t) = A \cos\left[\omega_o t + \alpha(t)\right] \tag{14}$$

where A is an arbitrary constant, ω_o is the center frequency of the carrier (in radians/Hz) and $\alpha(t)$ is the modulating phase angle. $\alpha(t)$ can be represented as

$$\alpha(t) = \sum_k \phi_m(t-kT_s)\,\mathrm{rect}(t-kT_s) \tag{15}$$

with the $\mathrm{rect}(t-kT_s)$ pulse defined by (2) and serving merely for reasons of computational convenience and not as a requisite.

As a matter of fact, any pulse of width T_s is permissible. Bandlimiting, however, creates a cumbersome, if not overly complex, signal representation that is not well-suited to the purposes of this discussion. We will therefore favor the latter method for representing PSK signals. In this case,

$$D_p(t) = \sum_k \text{rect}(t-kT_s) \cos \phi(t-kT_s) \cos \omega_o t - \text{rect}(t-kT_s) \sin \phi(t-kT_s) \sin \omega_o t \tag{16}$$

$$= \sum_k \text{rect}(t-kT_s) \cos [\omega_o t + \phi(t-kT_s)]$$

and once again, $\text{rect}(t-kT_s)$ is chosen for convenience's sake. Throughout the rest of this chapter, please note that the time dependence of all variables will be ignored whenever possible once they have been introduced and defined.

The modulated signal now passes through the bandlimiting transmit filter that is assumed to have the impulse response given by (3). From this filter, the transmitter output, $S_p(t)$, emerges with the form

$$S_p(t) = \sum_k p(t-kT_s) \cos [\omega_o t + \phi(t-kT_s)] \tag{17}$$

$$p(t) = \tfrac{1}{2} [\text{rect}(t) * h_t(t)] \tag{18}$$

and for $kT_s \leq t < (k+1)T_s$

$$S_p = p(t-kT_s) \cos [\omega_o t + \phi(t-kT_s)] + \sum_{i \neq k} p(t-iT_s) \cos [\omega_o t + \phi(t-iT_s)]$$

$$= (p_k \cos\phi_k + \sum_{i \neq k} p_i \cos\phi_i) \cos \omega_o t - (p_k \sin \phi_k + \sum_{i \neq k} p_i \sin \phi_i) \sin \omega_o t \tag{19}$$

$$= A(t-kT_s) \cos [\omega_o t + \psi(t-kT_s)]$$

which means that

$$A(t-kT_s) = A_k$$

$$= [(p_k \cos \phi_k + \sum_{i \neq k} p_i \cos \phi_i)^2 \tag{20}$$

$$+ (p_k \sin \phi_k + \sum_{i \neq k} p_i \sin \phi_i)^2]^{\frac{1}{2}}$$

$$\psi(t-KT_s) = \psi_k$$

$$= \arctan \left[\frac{p_k \sin\phi_k + \sum_{i \neq k} p_i \sin\phi_i}{p_k \cos\phi_k + \sum_{i \neq k} p_i \sin\phi_i} \right] \tag{21}$$

where $p_k = p(t-kT_s)$ and $p_i = p(t-iT_s)$. If the time assumption, $kT_s \leq t < (k+1)T_s$ is dropped, then S_p may again be expressed as

$$S_p = \sum_k A_k \cos(\omega_o t + \psi_k) \tag{22}$$

where it is seen that $A_k = p_k$ and $\psi_k = \phi_k$. In equations (19)-(22), the ISI effects are shown explicitly and then absorbed back into the simplified expression of (17).

While traversing the uplink section of the channel, the signal, S_p, is corrupted by noise, $n(t)$, having the form

$$n(t) = n_c(t) \cos \omega_o t - n_s(t) \sin \omega_o t. \tag{23}$$

In the preceding equation, n_c and n_s, the inphase and quadrature components of the noise, are independent, stationary,

zero-mean Gaussian random processes with each having a variance σ_n^2. Since this uplink noise happens to be additive in nature, the signal that enters the transponder, $X_p(t)$, may be expressed by

$$X_p(t) = S_p + n$$

$$= \sum_k A_k \cos(\omega_o t + \psi_k) + n_c \cos \omega_o t - n_s \sin \omega_o t$$

$$= \sum_k R_k(t) \cos[\omega_o t + \beta_k(t)] \tag{24}$$

$$R_k(t) = [(A_k \cos \psi_k + n_c)^2 + (A_k \sin \psi_k + n_s)^2]^{\frac{1}{2}} \tag{25}$$

$$\beta_k(t) = \arctan \left[\frac{A_k \sin \psi_k + n_s}{A_k \cos \psi_k + n_c}\right] \tag{26}$$

with β_k obviously representing the phase effects of the uplink noise and ISI, as well as the transmitted phase. From the set of equations presented above, along with (19)-(22), it is easy to see that the original PSK signal has been greatly altered. The overall phase and amplitude have become heavily dependent upon many different random processes, meaning that the signal presented to the transponder has a variable amplitude across each symbol--a situation that can have much significance vis' $P_M(e)$, the error probability.

As mentioned earlier, the typical TDMA satellite communications system operates with its transponder delivering maximum possible output power. This, of course, means that the TWT amplifier forming the heart of the transponder is

operated within its nonlinear region (recall Figure 2). The resulting AM-AM and AM-PM conversion effects, expressed as $f(\cdot)$ and $g(\cdot)$ respectively, mean that the varying amplitude of the input signal produces a randomly variable phase error rather than the predictable one of an ideal PSK signal. Consequently, the ISI and uplink noise find that they have "frozen" one another into the signal. The signal that is output to the downlink from the transponder, $Z_p(t)$, can therefore be described by

$$Z_p(t) = \sum_k f(R_k) \cos[\omega_o t + \beta_k - g(R_k)] \tag{27}$$

It is, at this point, already easy to comprehend that the effects that the uplink noise and ISI have on the system BER has severely inhibited its analytical tractability. Not only have the statistics of those two primary causes of signal degradation been altered nonlinearly, but they have become increasingly intertwined with one another and with the desired part of the signal. So much so, in fact, that it is impossible to assess the impact of one or the other by itself.

As if the analytical problem hasn't been made difficult enough at this point, the signal is once again corrupted by noise. Like that of the uplink, the downlink noise, $v(t)$, has the form

$$v(t) = v_c(t) \cos \omega_o t - v_s(t) \sin \omega_o t \tag{28}$$

where v_c and v_s are equivalent to their uplink counterparts, n_c and n_s, although having a unique variance σ_v^2 which may or may not be the same as σ_n^2. Since v is also additive in nature, the input to the receiver, $U_p(t)$, can be written as

$$U_p(t) = Z_p + v$$

$$= \sum_k f(R_k) \cos[\omega_o t + \beta_k - g(R_k)] + v_c \cos \omega_o t - v_s \sin \omega_o t \tag{29}$$

$$= \sum_k W_k(t) \cos[\omega_o t + \theta_k(t)]$$

$$W_k(t) = \left[\left(f(R_k) \cos[\beta_k - g(R_k)] + v_c\right)^2 + \left(f(R_k) \sin[\beta_k - g(R_k)] + v_s\right)^2\right]^{\frac{1}{2}} \tag{30}$$

$$\theta_k(t) = \arctan\left[\frac{f(R_k) \sin \beta_k + v_s}{f(R_k) \cos \beta_k + v_c}\right] \tag{31}$$

with θ_k representing the cumulative phase at the receiver input.

Passing into the receiver, the signal once again encounters a bandlimiting filter. Although not quite as narrow as the bandwidth of the transmit filter, the receive filter bandwidth is still sufficiently small to introduce some ISI. With the assumption that this filter has the impulse response given by (10), the filter output, $Y_p(t)$, has the form

$$Y_p(t) = \sum_k \sum_j \rho_k(t - jT_s) \cos(\omega_o t + \theta_k) \tag{32}$$

$$\rho_k(t) = \tfrac{1}{2}[W_k(t) * h_r(t)] \tag{33}$$

Recalling (19), if we now restrict our discussion to the time period $jT_s \leq t < (j+1)T_s$, the filter output may also be written

$$Y_p = \sum_k \rho_k(t-jT_s)\cos(\omega_o t+\theta_k) + \sum_k \sum_{n\neq j} \rho_k(t-nT_s)\cos(\omega_o t+\theta_k) \quad (34)$$

where, as usual, the second term on the right side represents the ISI. It can be noted that Y_p is a double summation due to the ISI introduced by the receive filter. This shows the additive nature of multiple sources of ISI in series. Y_p passes now into the demodulator where it is demodulated and sampled and where the decision is made as to the value of ϕ_j.

It is at this point that one is faced with the problem of analytically determining the probability of error for the system. If we denote the probability density function of Y_p, given that the transmitted phase $\phi = \phi_j$, as $q(Y|\phi = \phi_j)$, and if $\rho_j = \sum_k \rho_k(t-jT_s)$, $\rho_n = \sum_k \rho_k(t-nT_s)$, then the expression for the error probability is

$$P_M(e) = 1 - \Pr[\phi_j - \tfrac{\pi}{2M}(1+2j) < \phi_j + \Delta_j(t) < \phi_j + \tfrac{\pi}{2M}(1+2j)]$$

$$= \Pr[|\Delta_j(t)| > \tfrac{\pi}{2M}(1+2j)]. \quad (35)$$

$$\Delta_j(t) = \left[\frac{\rho_j \sin\theta_k + \sum_{n\neq j} \rho_n \sin\theta_k}{\rho_j \cos\theta_k + \sum_{n\neq j} \rho_n \sin\theta_k}\right]. \quad (36)$$

Even when one assumes, as we do, that the statistical properties of both noise functions and ϕ_i are known, the determination of the pdf of Δ, $q(\Delta)$, is an extremely complicated process.

The development of the various analytical methods has followed a fairly straightforward, more or less chronological path. In much of the early work, even before satellite systems became the primary genre under consideration, the methods concentrated on how to determine the effects of ISI in conjunction with additive noise. The systems dealt with were

primarily linear PAM systems with additive Gaussian noise and ISI arising either because of mismatched transmit and receive filters or other reasons. As satellites became more common, designers were faced with two-link systems containing a nonlinearity. Consequently, the next step along the path taken considered nonlinear systems with additive noise on both the uplink and the downlink. These approaches, however, tended to ignore the existence of ISI. Concurrently, some researchers examined nonlinear systems with intersymbol interference but no noise on the uplink. Logically, therefore, the final path taken has been the consideration of systems containing all three sources of signal degradation. That is, the consideration of systems similar in nature to that shown in Figure 3 with additive noise on both the uplink and the downlink and a nonlinear satellite transponder. In the following, the summaries of the literature will be grouped by the complexity of the class of systems with which they have dealt.

3.1.1 Approaches to Linear Systems with ISI and Additive Noise

At the lowest level of complexity are those approaches whose sole purpose is the determination of the effects of intersymbol interference on the performance of linear systems in the presence of additive noise. As can be surmised, the majority of this work was done at a time when FDMA systems, with their resulting linear operation, were the only type being used. Nonetheless, the work that is summarized herein forms the basis for much of the later work and is, therefore, important.

Figure 4 shows a model that may be used to represent a linear system with additive noise and ISI. Given that this system has the same input to the transmit filter as the system of Figure 3, then the receive filter output, $r(t)$, will be similar in form to that of X_p described previously. Namely, for $kT_s \leq t < (k+1)T_s$, and with

$$D_p = \sum_i \text{rect}(t-iT_s) \cos(\omega_o t + \phi_i), \tag{14}$$

$$\begin{aligned} r(t) &= p(t-kT_s) \cos(\omega_o t+\phi_k) + \sum_{i\neq k} p(t-iT_s) \cos(\omega_o t+\phi_i) + n \\ &= [p_k \cos \phi_k + \sum_{i\neq k} p_i \cos \phi_i + n_c] \cos \omega_o t \\ &\quad - [p_k \sin \phi_k + \sum_{i\neq k} p_i \sin \phi_i + n_c] \sin \omega_o t \\ &= r_1(t) \cos \omega_o t - r_2(t) \sin \omega_o t \end{aligned} \tag{37}$$

where n is the same as that of (23) and $p(t)$ is

$$p(t) = \tfrac{1}{2}\left(\text{rect}(t) * \tfrac{1}{2}[h_t(t) * h_c(t) * h_r(t)]\right). \tag{38}$$

In (38) above, $h_c(t)$ is the representation of the effects the linear channel between the transmitter and the receiver has on the transmitted signal.

A fundamental approach to determining the effects of ISI in any type of system is that of finding the worst case bound. An upper bound to the probability of error may be found by assuming that the ISI always takes its largest value. This bound is, in general, a very pessimistic one since the ISI only assumes its largest value with a very small probability.

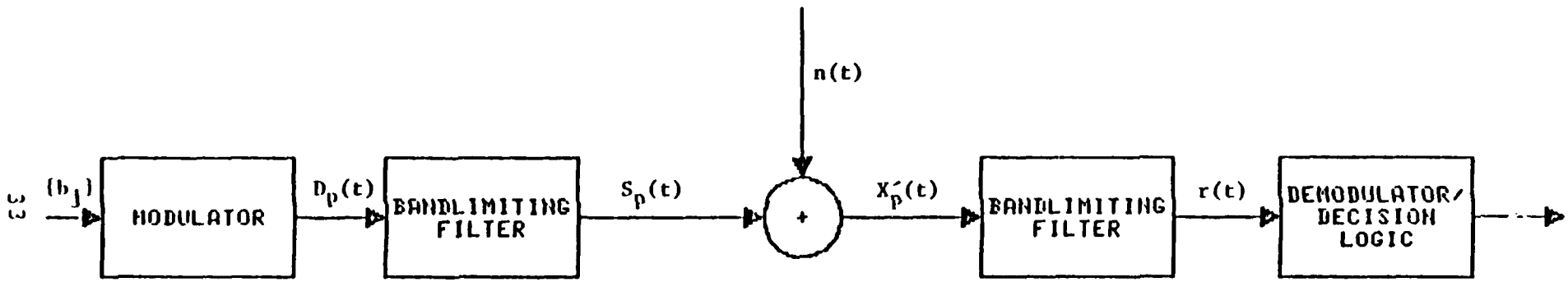

Figure 4 - Linear System with Additive Noise and ISI

Another very basic method of determining the effects of ISI is to obtain a lower bound to the BER by considering only a finite number of the interfering pulses. Jones [3] discusses how this is done for a linear PSK system containing ISI and AWGN. His conclucions are that this is a very cumbersome method of calculating ISI effects even when one is only dealing with the effects of an adjacent pulse. If, however, the ISI due to distant pulses is large, one comes upon a situation wherein the bound obtained is very loose and cannot be made significantly tighter due to the length of the required computation.

With crude upper and lower bounds realizable, using worst case analysis for the former and direct enumeration for the latter, the obvious next step down the path was an attempt at tightening one or both of these. In a 1968 paper, Saltzburg [4] has presented a tightened upper bound on the probability of error for a linear system utilizing multilevel pulse amplitude modulation (M-ary PAM) having ISI and additive Gaussian noise. Using what is known as the Chernoff bound, in which

$$\Pr[z > x] \leq \exp(-\lambda x)\ E[\exp(\lambda z)] \qquad \lambda \geq 0, \qquad (39)$$

where E[y] is the expectation of y, a bound is found that is the equivalent to the exponential part of a normal distribution where the larger ISI components act to reduce the signal level and the smaller components add to the noise level. With the basic system of Figure 4 being considered, the PAM signal input to the demodulator can be thought of as the amplitude of the inphase component of an M-ary PSK signal. In other words

$$r = \sum_k a_k p_k + n_c \qquad (40)$$

and

$$r(mT_s) = a_m p(0) + \sum_{k\neq 0} a_{m-k} p(kT_s) + n_c(mT_s)$$

$$= a_m p(0) + \sum_{k\neq 0} z_k + n_c(mTs) \qquad (41)$$

$$= a_m p(0) + z$$

where p(t) represents the convolution of the transmitted pulse with the bandlimiting channel filter, n_c is the thermal noise, and the summation in (41) represents, of course, the ISI. If the sequence $\{a_k\}$ has the M equally probable values

$$\alpha_j = 2_j - M - 1 \qquad j = 1,2,\ldots,M, \qquad (42)$$

then the overall symbol error probability is given by

$$P_M(e) = \frac{2(M-1)}{M} \Pr[z > p_o'] \qquad (43)$$

with $p_k' = |p(kT_s)|$. The Chernoff bound on the probability of error is presented as

$$P_M(e) \leq \frac{2(M-1)}{M} \exp - \left(\frac{[p_o' - (M-1) \sum_{k\varepsilon K} p_k']^2}{[2(\sigma_n)^2 + \frac{1}{3}(M+1)(M-1) \sum_{k\not\varepsilon K} (p_k')^2]} \right) (44)$$

where σ_n^2 is the variance of n_c, $\sum_{k\varepsilon K} p_k' < \frac{p_o'}{M-1}$ is a working constraint, and $k\varepsilon K$ represents those interferers that are assumed to subtract from the signal while $k\not\varepsilon K$ represents those that add to the noise. After presenting this, Saltzburg gives a method for optimizing the set K for the minimization of the bound. Finally, (44) is applied to the case of ideal

bandlimited signaling with bandwidths at the Nyquist level and below by way of example.

Following the concepts mentioned above, Lugannani [5] presents a variation on the development of the error probability expression. He recognizes that a weakness of the Chernoff bound is that it is progressively more inaccurate for small boundry values, i.e., for small values of x in $Pr[z \geq x]$. Consequently, the error expression is divided into two terms only one of which has a Chernoff bound applied, and that term has a factor that is small when x is small thus reducing the uncertainty introduced in the bounding process. Additionally, the bound used is computationally simpler than that used in (44) yet is constrained to always being no worse than the worst case bound. The system model used by Lugannani is the same as that used by Saltzburg with the exception that M = 2 in order to simplify the analysis. Due to the separation of the effects of the ISI and the noise, the demodulator input at time $t = mT_s$ is written

$$\begin{aligned} r(mT_s) &= a_m p(0) + \sum_{k \neq 0} a_{m-k}\, p(kT_s) + n_c(mT_s) \\ &= a_m p(0) + z_m + n_c(t) \end{aligned} \tag{41}$$

and the expression for the probability of error evolves into

$$\begin{aligned} P_2(e) = {} & \tfrac{1}{2} Pr[|n_c(t)| \geq p_o'] \\ & + \tfrac{1}{2} \int_o^\infty [q(p_o'-s) - q(p_o'+s)] \qquad Pr[|z_m| \geq s]ds \end{aligned} \tag{45}$$

where $q(\cdot)$ is the pdf of n_c. If it is assumed that B(0) represents the worst-case ISI and σ_z^2 is the variance of the ISI term, then the bound presented in this paper can be derived from

$$\Pr[|z_m| \geq s] \leq \min\,[2\exp(-s^2/s\sigma_z{}^2),\ \chi(s)] \tag{46}$$

with $\chi(s)$ defined by

$$\chi(s) = \begin{cases} 1 & 0 \leq s \leq B(0) \\ 0 & B(0) \leq s \end{cases} \tag{47}$$

Given the following definitions,

$$\eta = \frac{p_o'}{\sigma_z} \tag{48}$$

$$\gamma^2 = \frac{z^2}{\sigma_z{}^2 + \sigma_n{}^2} \tag{49}$$

$$\lambda = \frac{B(0)}{\sigma_z} \tag{50}$$

and

$$n = \min\,[\lambda,\ \ln 4],\ N = \max\,[\lambda,\ \ln 4], \tag{51}$$

$$\mu = (1 - \gamma^2)^{-\frac{1}{2}} \tag{52}$$

$$\begin{aligned} P_2(e) \leq\ & \tfrac{1}{2}\int_{\eta-n\gamma\mu}^{\infty}\phi(s)ds + \tfrac{1}{2}\int_{\eta+n\gamma\mu}^{\infty}\phi(s)ds \\ & + \gamma\exp[-\tfrac{1}{2}\eta^2(1-\gamma^2)]\int_{\ln 4\ \mu-\eta\gamma}^{\ln 4\ \mu+\eta\gamma}\phi(s)ds \\ & - \gamma\exp[-\tfrac{1}{2}\eta^2(1-\gamma^2)]\int_{N\mu\ -\ \eta\gamma}^{N\mu\ +\ \eta\gamma}\phi(s)ds \end{aligned} \tag{53}$$

where $\phi(s)$ is the normalized Gaussian density function. Following the derivation of the bound in (53), three different pulses: An ideal bandlimited pulse, a fourth-order Chebyshev, and a Gaussian are used as examples to compare the results of (53) to those using worst-case bounds and to the truncated pulse train method similar to that of [3]. In comparison with [4], (53) is seen to be tighter in all cases, with the possible exception of those where the N_o's are very small and K is optimized. In addition, (53) is considerably less arduous to compute.

The next logical step in developing an upper bound on the $P_M(e)$ due to ISI and additive noise was an extension of the bounding techniques of [4] and [5] to M-ary PSK modulation schemes. Dealing only with coherent PSK, Prabhu [6] applied the methods and equations of [4] to binary and quarternary PSK signals. In the former case, he notes that the modulation is, effectively, only applied to one of the two orthogonal carriers and thus, the situation is the same as that in a binary PAM system. The bound arrived at for BPSK is therefore the equivalent of that given in equation (44). Finding a bound for the QPSK case is a more complicated, albeit very slightly, task than that for BPSK. With the (normalized) desired signals on the inphase and quadrature carriers defined as a_o and b_o respectively, and with the (normalized) combined ISI and noise for the two denoted by z_a and z_b respectively, the error probability for a given phase $\phi = \phi_k$ can be written as

$$\begin{aligned} P_4(e) &= \tfrac{1}{2}\Pr[a_o+z_a < \cos\phi_k] + \tfrac{1}{2}\Pr[b_o+z_b < \sin\phi_k] \\ &\quad - \Pr[a_o+z_a < \cos\phi_k \text{ and } b_o+z_b < \sin\phi_k] \\ &= \Pr[(a_o+z_a,\ b_o+z_b)\in R_1\cup R_2] \\ &\quad - \Pr[(a_o+z_a,\ b_o+z_b)\in R_1\cap R_2] \end{aligned} \tag{53}$$

where R_1 and R_2 are regions of probability space as seen from Figure 5. Due to the intuitively small probability of $R_1 \cap R_2$, Prabhu applies the "union bound"

$$P_4(e) < P_r[(a_o+z_a,\ b_o+z_b)\varepsilon R_1] + P_r[(a_o+z_a,\ b_o+z_b)\varepsilon R_2] \quad (54)$$

in a move that can be seen to reduce (53) to a sum of two BPSK bounds--one for each carrier. Following the development of the bounding equations, several graphs are presented showing the performance of various pulses as a function of the number of poles in an RF filter and the filter bandwidth.

An extension of Lugannani's error bound to M-ary PSK systems is made in [7]. Following the same developmental process as in [5], Koubanitsas splits the error expression in two parts and applies the same Chernoff bound to the term representing the effects of ISI. Since, for general M-ary systems, one always encounters the form of the error probability expression as given in the paragraph above for the QPSK case, the union bound has been applied for simplification of the computations. The final result is the sum of several error and co-error functions. There are several graphs presented comparing the bound that was derived with various other bounds including that of [5].

Using the Chernoff bounding theory, however, is not the only approach that has been taken towards finding the effects of ISI on the BER of a linear channel. In a 1974 paper, P. J. McLane [8] developed a lower bounds on $P_M(e)$ that, when used in conjunction with any of several previously developed upper bounds, specifies the degradation due to ISI and noise to a finer level of precision than that gained in using an upper bound alone. Considering the same system as [4] and [5] with the ISI assumed to remain effectively constant beyond some finite number of pulses, N, and to have a symmetric pdf,

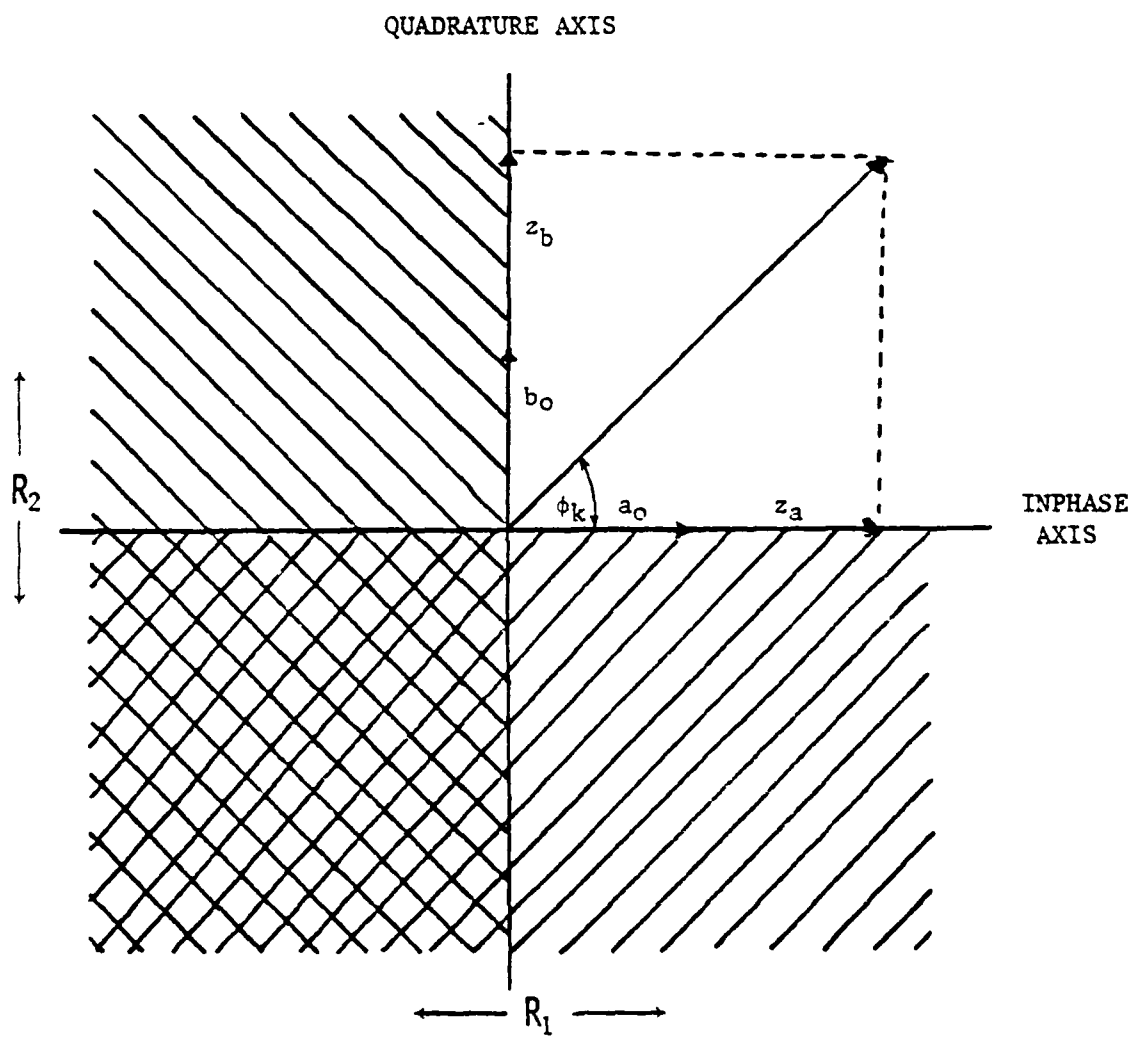

Figure 5 - QPSK Probability Space Diagram

then the input to the demodulator at $t = mT_s$ is written

$$r(mT_s) = a_m p(0) + \sum_{k=N/2}^{N/2}{}' a_k p(kT_s) + n_c(mT_s)$$

$$= a_m p(0) + z_m + n_c(mT_s) \tag{41c}$$

with the ISI from all pulses beyond $|\frac{N}{2}|$ assumed to be 0. The $\sum_k{}'$ denotes summation with the exclusion of the k=0 term. If it is assumed that

$$G_n(x) = Pr(n_c \geq x)$$

$$= 1 - F_n(x) \tag{55}$$

where $F_n(x)$ is the distribution function of n_c, then the expression for the error probability may be given in the form

$$P_2(e) = \tfrac{1}{2}\left(E_{z_m}[G_n(p_o' + |z_m|)] + E_{z_m}[G_n(p_o' - |z_m|)]\right) \tag{56}$$

with $E_Y[g(y)]$ denoting the expectation of $g(y)$ with respect to Y. At this point, a final condition is placed on the signal: for $x \varepsilon X$, $G_n(x)$ is assumed to be convex. An application of Jensen's inequality is, therefore, allowed and yields

$$P_2(e) \geq \tfrac{1}{2}\left(G_n[p_o' + E(|z_m|)] + G_n[p_o' - E(|z_m|)]\right) \tag{57}$$

for all $p_o \pm E(|z_m|) \varepsilon X$. Since, in general, $E(|z_m|)$ is almost impossible to compute, upper and lower bounds for this term are needed. The upper bound is shown to be σ_z whereas two lower bounds, b_i, are given as

$$b_1 = \frac{\sigma_z^2}{[E(z_m^4)]^{\frac{1}{2}}} \tag{58}$$

$$b_2 = \frac{\sigma_z^2}{B(0)} \tag{59}$$

where the use of b_1 yields what is known as the "fourth moment lower bound" and b_2 the "ratio lower bound." McLane proceeds to present several graphs showing his bounds and those of some others for various signal pulses and values of N.

A developmental branch of the analytical methods that arose concurrently with the bounding approach uses the Gram-Charlier expansion of the ISI (or ISI + noise) pdf to allow direct evaluation of P(e) to just about any desired level of accuracy. In a 1971 paper, Shimbo and Celebiler [9] first introduced this method, applying it to binary PAM signals in the system of Figure 4. In a parallel to the work of Saltzberg [4], the particular approach used involves the expansion of the pdf of the noise + ISI. The demodulator input, therefore, has the form of (41a) for $t=mT_s$ and the probability of error can be written as

$$\begin{aligned} P_2(e) &= \tfrac{1}{2}[1 - \Pr(|z| \leq p_o')] \\ &= \tfrac{1}{2}(1 - Q_e). \end{aligned} \tag{60}$$

Q_e, as given above, can be expressed in terms of the distribution function of Z; $f_Z(z)$, which in turn can be expressed as a Fourier transform of its characteristic function. Since the characteristic function of the ISI and the AWG noise, Q_e, is given as

$$Q_e = F_Z(p_o') - F_Z(-p_o')$$

$$= \frac{1}{\pi}\int_{\infty}^{\infty} \frac{\sin(p_o' u)}{u} \quad (\prod_1^{\infty} \cos p_k' u) \quad \exp(=\tfrac{1}{2}\sigma_n{}^2 u^2)\,du \tag{61}$$

where the infinite product of cosines is the characteristic function of the ISI and the exponential factor is that of the noise. $\sigma_n{}^2$ is the noise power. If the following definitions are allowed,

$$\sigma^2 = \sigma_n{}^2 + \sum_1^{\infty} p_k{}^2, \quad s=p_o'/\sigma, \quad \alpha_k=p_k'/\sigma, \quad d= \sum_1^{\infty} d_k{}^2, \tag{62}$$

the Q_e can be rewritten as

$$Q_e = \frac{1}{\pi}\int_{\infty}^{\infty} \frac{\sin(su)}{u} \quad \exp(\tfrac{1}{2}\alpha u^2) \quad (\prod_1^{\infty} \cos \alpha_k u) \quad \exp(-\tfrac{1}{2}u^2)\,du. \tag{63}$$

The Gram-Charlier power series expansion

$$\exp(\tfrac{1}{2}\alpha u^2)\,(\prod_1^{\infty} \cos \alpha_k u) = 1 + \sum_1^{\infty} b_{2k} u^{2k} \tag{64}$$

can now be applied and the resulting expression for the error probability is

$$P_2(e) = \tfrac{1}{2}\,\mathrm{erfc}(s/2) + \sum_2^{\infty} (-1)^k b_{2k} G_{2k-1}(s) \tag{65}$$

when $G_k(s)$ is the k-th order Hermite function

$$G_k(s) = \frac{(-1)^k}{(2\pi)^{\frac{1}{2}}} \quad \frac{d^k}{ds^k} \quad (\exp -\tfrac{1}{2}s^2)$$

$$G_{k+1}(s) = sG_k(s) - kG_{k-1}(s) \tag{66}$$

The coefficients of the series expansion, b_{2k}, are found to be expressed as the recurrence relation

$$b_{2k} = \frac{1}{2k} \sum_{n=1}^{k} b_{2k-2n} d_{2n-1} \tag{67}$$

where $b_o = 1$ and d_{2n-1} is the product of the (2n-1)-th coefficient of the power series expansion of tan u by the sum $\Sigma_1^\infty \sigma_k^{2n}$; $d_1 = 0$. In equation (65), $P_2(e)$ consists of two terms, the first of which can be thought of as the error due to additive Gaussian noise of power σ^2 and the second as that due to the infinite ISI. If the intersymbol interference power, $\Sigma_1^\infty (p_k)^2$ is smaller than the noise power, σ_n^2, then (65) will converge rather quickly. If, however, the ISI is large compared to the noise power, convergence will be slow, and thus, another expression for $P_2(e)$ is given that causes the rate of convergence to increase:

$$P_2(e) = \frac{1}{L}\left(\sum_{i-1}^{L} [\tfrac{1}{2} \operatorname{erfc}(s_i/2) + \sum_{2}^{\infty} (-1)^k b_{2k} G_{2k-1}(s_i)] \right) \tag{68}$$

with

$$s_i = p_o'/[\sigma_n^2 + \sum_{j=r} (p_j')^2]^{\frac{1}{2}} \pm \alpha_1' \pm \alpha_2' \pm \ldots \pm \alpha_{r-1}'$$

$$\alpha_k' = p_k/[\sigma_n^2 + \sum_{j=r} (p_j')^2]^{\frac{1}{2}} \tag{69}$$

$$L = 2^{r-1}$$

This means that the error calculation becomes the enumeration of the ISI for r-1 terms. A method of calculating the resulting truncation error is presented and (68) is applied to various pulse shapes as a function of L and compared to some previously developed $P_2(e)$ bounds.

Once again, the next logical step in the development of the series approach was an extension of the work of [9] to M-ary PSK (CPSK) modulation schemes, and once again Prabhu was the one to perform such an extension. In [10] such an extension is made. After passing over the binary case with just a few brief comments, the case of quarternary PSK is chosen as the primary vehicle for development of the bounds. Utilizing the same demodulator input signal as in [6], an expression for the error probability given that $\phi_k = \frac{\pi}{4}$ at $t = t_o$ is

$$P(e|\phi_k=\tfrac{\pi}{4}) = 1 - \Pr[a(t_o)+z_a(t_o) \geq 0 \text{ and } b(t_o)+z_b(t_o) \geq 0] \quad (70)$$

If it is now assumed that the major interference terms correspond to $-N_1 < M < N_2$, $N = N_1 + N_2$, then the conditional probability can be written

$$P(e|\phi_k=\tfrac{\pi}{4}) = 1 - \Pr[y_n+y_R \geq \gamma_{OC} \text{ and } Z_N+z_R \geq -\gamma_{os}] \quad (71)$$

where

$$\begin{aligned} y_N &\equiv n_c(t_o) + \sum_{m\epsilon\Lambda} \lambda_m \\ y_R &\equiv \sum_{m\not\epsilon\Lambda} \lambda_m, \quad E[y_R] = 0 \end{aligned} \quad (72)$$

$$z_N \equiv s(t_o) + \sum_{m \in \Lambda} \tau_m$$

$$z_R \equiv \sum_{m \notin \Lambda} \tau_m, \quad E[z_r] = 0 \tag{73}$$

$$\lambda_m \equiv a_m(y_o) - E[a_m(t_o)]$$

$$\tau_m \equiv b_m(t_o) - E[b_m(t_o)] \tag{74}$$

and

$$\lambda_{oc} \equiv a(t_o) + \sum_{m \neq 0} E[a_m(t_o)]$$

$$\lambda_{os} \equiv b(t_o) + \sum_{m \neq 0} E[b_m(t_o)] \tag{75}$$

From this point, it is shown that the bounds for the probability of error can be written as

$$F_{y_N}(-\gamma_{oc}-\Delta) + F_{z_N}(-\gamma_{os}-\Delta) - F_{y_N z_N}(-\gamma_{oc}+\Delta, -\gamma_{os}+\Delta)$$

$$-\Pr[|y_R| \geq \Delta] - \Pr[|z_R| > \Delta]\, P(e|\phi_k = \tfrac{\pi}{4}) \leq F_{y_N}(-\gamma_{oc}+\Delta)$$

$$+ F_{z_N}(-\gamma_{os}+\Delta) - F_{y_N z_N}(-\gamma_{oc}-\Delta, -\gamma_{os}-\Delta) \tag{76}$$

$$+ \Pr[|y_R| > \Delta] + \Pr[|z_R| > \Delta]$$

where $F_y(x) = \Pr[y \leq x]$ and Δ is any real number. Following this, Prabhu uses the Gram-Charlier expansion to compute the $F(\cdot)$'s and proceeds to present a method of bounding the error whereby

$$\Omega(m\varepsilon\Lambda) - \delta(\Delta) \leq P(e) \leq \Omega(m\varepsilon\Lambda) + \delta(\Delta) \qquad (77)$$

with $\Omega(\cdot)$ the series expression of the probability of error due to the ISI terms where $m\varepsilon\Delta$ and $\delta(\Delta)$ is the truncation error for those terms $m\varepsilon\Delta$. Bounds for $\delta(\Delta)$, and hence for $P(e)$, are shown to be computable using the Chernoff technique and the optimization of Λ is performed the same way as in [4]. An extension from QPSK to general M-ary PSK is discussed and several graphs and diagrams are given showing the performance of this approach.

3.1.2 Approaches to Nonlinear Systems with Additive Noise Only

As the number of satellites and satellite users grew, it rapidly became apparent that the power and signal-bandwidth limitations inherent in FDMA were bound to doom the technique. TDMA was obviously the solution to the problem, yet the operation of the satellite transponder to achieve peak power efficiency created its own problem: a nonlinear TWTA transfer characteristic. It became, therefore, necessary to determine the effect of this nonlinearity on the system performance. The next level of complexity in the approaches to the performance prediction problem--above and beyond those dealing with the effects of ISI and additive noise in a linear system--are those attempts at the determination of the effects of additive noise in a nonlinear system. Obviously, some of the noise must be assumed to appear at the input to the TWTA (i.e., the uplink noise) and, indeed, all of the work summarized herein makes that assumption. Descriptions of the various approaches to this problem follow. It should be noted that various and sundry reasons are given for ignoring the existence of ISI and

that these reasons will be mentioned within the summary of each approach.

In Figure 6, a model of a nonlinear system with additive noise is shown. As could be surmised, it is almost identical to that of Figure 3 with the bandpass nonlinearity representing the whole transponder and without the bandlimiting character of the transmit and receive filters. Given that this system has the same modulator output, D_p, as does the system of Figure 3, then the input to the bandpass nonlinearity is

$$\begin{aligned} X_p &= S_p + n \\ &= \sum_i [p_i \cos(\omega_o t+\phi_i)] + n_c \cos \omega_o t - n_s \sin \omega_o t \\ &= R_i(t) \cos[\omega_o t+\beta_i(t)] \end{aligned} \tag{78}$$

$$R_i(t) = \left((\sum_i p_i \cos \phi_i + n_c)^2 + (\sum_i p_i \sin \phi_i + n_s)^2 \right)^{\frac{1}{2}} \tag{79}$$

$$\beta_i(t) = \arctan \left[\frac{\sum_i p_i \sin \phi_i + n_s}{\sum_i p_i \cos \phi_i + n_c} \right] \tag{80}$$

where n is the same as that of (23) and p is the same as that in equation (17). For a particular time, $kT_s \leq t < (k+1)T_s$, it can be seen that there is no ISI present. Passing through the bandpass nonlinearity, once again described by $f(\cdot)$ and $g(\cdot)$, the signal at the input to the receive filter can be given as in (28) exclusive of the effect of the ISI introduced by the transmit filter of Figure 3. Since there is also no ISI as created by the receive filter, the demodulator input for the time $kT_s \leq t < (k+1)T_s$ can be expressed by

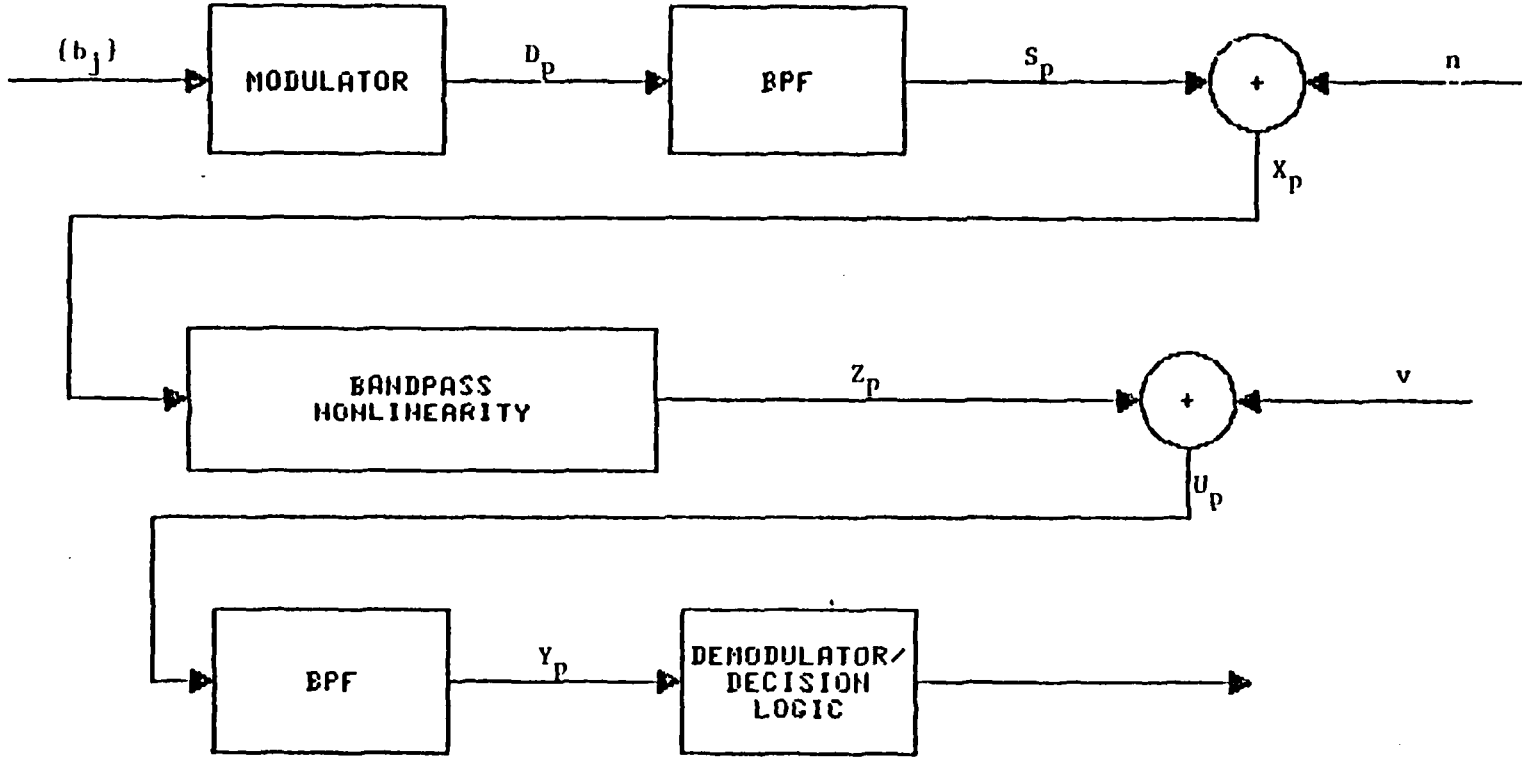

Figure 6 - Bandpass Nonlinearity with Noise

$$Y_p = \rho_k \cos(\omega_o t + \theta_k) \tag{81}$$

where ρ_k is as written in (33) (excluding the ISI that affects W_k as was previously noted).

Although some earlier work has been done on the system of Figure 6, one of the first approaches to the problem was presented in a 1972 paper by Davisson and Milstein [14]. This approach comprised two parts, the first concerned the case of a one-link system where the downlink of Figure 6 is excluded and the second being concerned with a two-link system similar to that in Figure 6 with a second bandpass nonlinearity at the receiver input. All of the nonlinearities are assumed to be identical limiters having the transfer characteristic shown in Figure 7. Additionally, both the one and two-link systems are assumed to have a demodulator output that is the result of shifting the signal down to baseband, integrating for T_s seconds, and sampling.

In the first part of [14], the modulation scheme given is BPSK and the input to the bandpass limiter, therefore, is

$$\begin{aligned} X_p &= (R_k \cos \phi_k) \cos(\omega_o t + \beta_k) \\ &= V_{ki}(t) \cos(\omega_o t + \beta_k) \end{aligned} \tag{82}$$

where all of the variables are as previously defined and $\phi_k = 0$ or π. Since the limiter only has an AM-AM characteristic which we can describe by $f(\cdot)$, then the output of the limiter is

$$\begin{aligned} Z_p &= f(V_{ki}) \cos(\omega_o t + \beta_k) \\ &= V_{ko}(t) \cos(\omega_o t + \beta_k) \end{aligned} \tag{83}$$

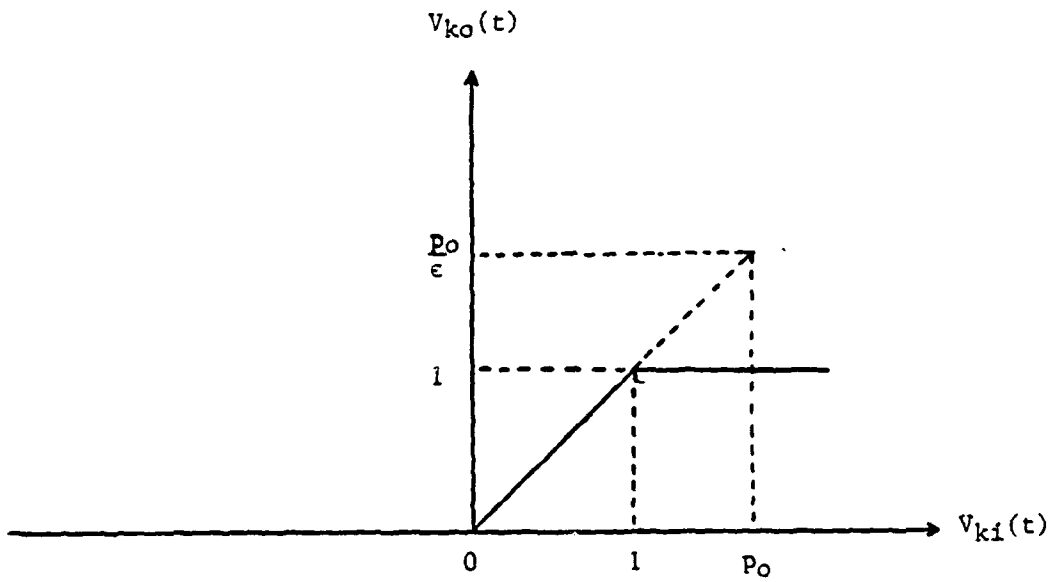

Figure 7 - Davisson & Milstein's Limiter Characteristic

and the sampler output, $d(t)$, can be expressed, for $t=(k+1)T_s$, as

$$d[(k+1)T_s] = \tfrac{1}{2} \int_{kT_s}^{(k+1)T_s} V_{ko} \cos \beta_k \, dt. \tag{84}$$

It is noted that (84) is a stochastic integral that, in general, has an unknown pdf. To make the theoretical analysis tractable, the baseband detector is henceforth assumed to be of the sample-and-sum type instead of the integrate-and-dump as was described previously. If, further, k=0, this assumption yields

$$d(T_s) = \frac{T_s}{N} \sum_{i=1}^{N} V_{ko}\left(\frac{iT_s}{N}\right) \cos \beta_k\left(\frac{iT_s}{N}\right). \tag{85}$$

With the noise power spectral density assumed to be flat over a bandwidth equal to $2(2\pi f_c)$, N is chosen to be $2f_cT_s$ in a move to insure the independence of the samples in (85). At this point, the term to the right of the Σ in (85) is defined as

$$\alpha_i = V_{ko}\left(\frac{i}{2f_c}\right) \cos \beta_k \left(\frac{i}{2f_c}\right) \tag{86}$$

and the error probability is

$$P_2(e) = \left[\tfrac{1}{2} \Pr\left(\sum_{i=1}^{2f_cT_s} \alpha_i < 0 \,|\, \phi_k = 0\right) + \Pr\left(\sum_{i=1}^{2f_cT_s} \alpha_i > 0 \,|\, \phi_k = \pi\right)\right] \tag{87}$$

from which it can be seen that the calculation of $P_2(e)$ requires that the probability density of α_i be known. This pdf is derived and is given by

$$q(\alpha) = \begin{cases} 0 & |\alpha| > 1 \\ 2\,\varepsilon'\Lambda(\varepsilon'\alpha-\lambda)[\mathrm{erf}\,(1-\alpha^2)^{\frac{1}{2}}\varepsilon')-\tfrac{1}{2}] & \\ + \quad (2/\pi)^{\frac{1}{2}}\exp\left[-\tfrac{1}{2}\lambda^2(1-\alpha^2)\ /\ (1-\alpha^2)^{\frac{1}{2}}\right]\ [(\lambda\alpha-\varepsilon') & \\ + \ \lambda\alpha\mathrm{erf}(\lambda\alpha-\varepsilon')] & |\alpha| \leq 1 \end{cases} \tag{88}$$

where

$$\lambda = \frac{R_k}{\sigma_n^2}, \quad \varepsilon' = \frac{\varepsilon}{\sigma_n^2} \tag{89}$$

and

$$\Lambda(x) = (2\pi)^{-\frac{1}{2}} \exp(-x^2/2). \tag{90}$$

The derivation of (88) should be noted as being somewhat complicated and evaluation of $P_2(e)$ is performed by using a computer to perform the necessary $2f_cT$ numerical convolutions of (88). A graph is presented showing the relative performance of the system as calculated from (87) as a function of the ε/p_o ratio and in comparison to the "continuous-time linear" system performance. It is seen that the closer the limiter comes to being an ideal hard limiter (ε=0), the more the one link system performance is degraded--up to 2 dB for a BER of 10^{-5} in the ideal case.

For the two-link system previously mentioned, Davisson and Milstein are effectively just repeating the work of the first part of their paper. Although they discuss a variation

of the two-link system that was studied by I. Jacobs in a 1965 paper, it is a very limited discussion even though there is an extensive expansion and solution of the error equation given by Jacobs presented in an appendix. The sum total of this study of a two-link system with two bandpass limiters was that graphs were generated comparing the performance of the authors' system, the system studied by Jacobs, and a similar linear system for three different values of $N = 2f_cT_s$, the number of samples taken. Resulting from these comparisons is the conclusion that multiple limiters, with and without Jacobs' clipper, enhance a system's performance, particularly for small values of N, over that expected for linear systems with the same number of noise sources (≥ 2). This is in contrast to Jacobs who predicts enhancement only for small BT_s products.

Following the developmental process initiated in [14], one could presume that the next logical step would have been the extension of the nonlinearity's characteristic from that of a limiter to a more general case. Additionally, one might also expect an extension of the modulation format to a generalized M-ary PSK one. This was indeed the situation in a 1973 paper by Lyons [15]. Using analog PM notation in analyzing the effect the nonlinear transponder has on a signal (an acceptable technique that is notationally convenient and can be generalized with ease to the PSK case since there is no bandlimiting), the transponder output is the same as Z_p of Figure 6. Lyons, however, separates Z_p into the desired and undesired portions of the signal. Recalling that (using analog PM notation)

$$Z_p = f(R)\cos[\omega_o t + \phi + \gamma(t) - g(R)]. \qquad (91)$$

where R and ϕ are the analog representations of the previously defined [(78)-(80)] variables R_K and ϕ_k, and $\gamma(t)$ is the

phase error due to the uplink noise. The desired portion of the signals, $Z_p'(t)$, is found by taking the expectation of Z_p conditioned on the known value of $\omega_o t + \phi$. This yields

$$Z_p'(t) = A\cos(\omega_o t + \phi - \eta) \tag{92}$$

with

$$A = E\left(f(R)\cos[\gamma - g(R) + \eta]\right) \tag{93}$$

and

$$\eta = \arctan\left(\frac{E(f(R)[\sin\gamma - g(R)])}{E(f(R)[\cos\gamma - g(R)])}\right) \tag{94}$$

Obviously, therefore, the unwanted portion of the signal, the "pseudo-noise," $n'(t)$, may be written as

$$n'(t) = Z_p - Z_p' = n_c'(t)\cos(\omega_o t+\phi-\eta) - n_s'(t)\sin(\omega_o t+\phi-\eta) \tag{95}$$

$$n_c'(t) = f(R)\cos[\gamma - g(R) + \eta] - A \tag{96}$$

$$n_s'(t) = f(R)\sin[\gamma - g(R) + \eta]. \tag{97}$$

The downlink noise, v, now combines additively with the "pseudo-noise" and the path that needs to be taken becomes pretty clear albeit exceedingly complicated. To reduce the complexity, Lyons makes the assumptions that, 1) a number of samples of the received phase, N, are taken over one symbol duration and, as in [14], to insure their independence $N = 2n+1 \approx 2f_cT_s$, and 2) the detector operates by majority decision logic. Taken together, these two assumptions make

the error probability the probability that n + 1 samples are incorrect; this is given by

$$P_M(E) = \sum_{k=0}^{n} \binom{2n+1}{k} [1-P_M(e)]^k [P_M(e)]^{2n+1-k} \tag{98}$$

where $P_M(e)$ is the probability of error for a single sample

$$P_M(e) = \Pr[|\delta| > \pi/M] \tag{99}$$

$$\delta = \arctan\left[\frac{n_s' + v_s}{A + n_c' + v_c}\right] \tag{100}$$

To solve (99), it is necessary to know the joint pdf of n_c', n_s', v_c', and v_s. Since n and v are assumed to be statistically independent with known pdf's, then the solution can be achieved just by calculating $q(n_c', n_s')$. A general method of doing this is given. An example and related graphs are presented for the case in which the bandpass nonlinearity is a limiter (similar to the limiter of Davisson and Milstein's paper). The graphs are given as functions of the signal-to-noise ratio (SNR) and the B_nT_s product. As in [14], the limiter is seen to degrade performance in the absence of downlink noise and enhance performance in its presence when $(SNR)_{up} = (SNR)_{down}$ for the BPSK case--although not for QPSK or 8-PSK. Overall, Lyons notes that the system degradation due to a hardlimiting nonlinearity is an increasing function of M, the percentage of the total noise that is found in the uplink, and the B_nT_s product, except for BPSK when the downlink noise dominates in which case the performance is enhanced.

Extending the work done in [14] and [15], Jain and Blachman [16] look at the system of Figure 6 with a BPSK modulation format and an ideal hard limiter as the system nonlinearity. The primary intent of their study was to justify

and demonstrate the desirability of limiting via an accurate method of calculating the error performance. Making the same assumptions vis´ selection of the number of samples taken per bit as we have discussed previously, the error probability expression becomes that presented earlier by Lyons (98). Since the possible values of the modulation phase are, as usual, considered to be equally probable, the calculation of $P_M(E)$ devolves into the calculation of the error probability $P_M(e)$ for any one sample of the received signal. Due to the ideal nature of the limiter, where $f(\cdot) = 1$ and $g(\cdot) = 0$, the transponder output is written (in analog PM notation) as

$$Z_p = \cos(\omega_o t + \beta) \tag{101}$$

$$\begin{aligned} \beta &= \arctan\left[\frac{p_o \sin\phi + n_s}{p_o \cos\phi + n_c}\right] \\ &= \arctan\left[\frac{n_s}{p_o \cos\phi + n_c}\right] \end{aligned} \tag{102}$$

and the receiver input as

$$Y_p = a\cos(\omega_o t+\beta) + v_c \cos\omega_o t - v_s \sin\omega_o t \tag{103}$$

where a is determined by downlink losses, etc., and heretofor has been assumed to be unity. With a coherent demodulator and remembering that $\sin(n\pi) = 0$ for all n, the sampled base-band representation of Y_p becomes

$$r(t_o) = a\cos\beta(t_o) + v_c(t_o). \tag{104}$$

In order to find $P_2(e)$ it is now seen to be necessary to determine the pdf, $q(r)$, of the sampled output. From the known pdf of v_c and (104) this is obtained by convolving the pdf of the phase β with that of the noise yielding

$$q(r) = (2\pi\sigma_v^2)^{\frac{1}{2}} \int_0^{2\pi} \exp\left(\frac{-(r-a\cos\beta)^2}{2\sigma_v^2}\right) q(\beta)\, d\beta. \tag{105}$$

If it is assumed that the transmitted bit is a 1 ($\phi = 0$), $P_2(e)$ can now be written as

$$\begin{aligned} P_2(e) &= \int_{-\infty}^{0} q(r)\, dr \\ &= \int_0^{2\pi} q(\beta) \left[(2\sigma_v^2)^{-\frac{1}{2}} \int_{-\infty}^{0} \exp\left(\frac{-(r-a\cos\beta)^2}{2\sigma_v^2}\right) dr \right] d\beta \\ &= \tfrac{1}{2} - \tfrac{1}{2} \int_0^{2\pi} \mathrm{erf}\left(a[2(\sigma_v)^2]^{-\frac{1}{2}} \cos\beta\right) q(\beta)\, d\beta \end{aligned} \tag{106}$$

from which it is easy to see that $P_2(e)$ is unaffected by the limiter when all of the noise is on only one of the two links. It should be noted that this conclusion contradicts [14] for the case of no downlink noise. The error function is now expressed in the form of a Fourier series containing an integral, the solution of which is given in terms of a confluent hypergeometric series. Consequently, the probability of error is expressed by

$$\begin{aligned} P_2(e) = \tfrac{1}{2} \Bigg[1 - \frac{2}{\pi} \sum_{n=0}^{\infty} \frac{(-1)^n \Gamma(n+\frac{1}{2})}{(2n+1)!} [a(2\sigma_v^2)^{-\frac{1}{2}}]^{2n+1} \\ {}_1F_1\left(n+\tfrac{1}{2}, 2n+2, -\frac{a^2}{2\sigma_v^2}\right) \int_0^{2\pi} \cos[(2n+1)\beta]\, q(\beta)\, d\beta \Bigg] \end{aligned} \tag{107}$$

where ${}_1F_1(\cdot)$ is the confluent hypergeometric series and $\Gamma(\cdot)$ is the gamma function as usual. Following the derivation of (107), three different yet equivalent expressions for $P_2(e)$ are presented. In the first, an integral representation for $q(\beta)$ (for a specific value of ϕ) and a convergent infinite series solution is developed. The second expression, again a series solution, is conjured up by using a relationship whereby the confluent hypergeometric series is a function of two sequential modified Bessel functions. Lastly, an equivalent to (107) is developed through the use of a closed form representation of $q(\beta)$. This leads to an evaluation of (106) that gives $P_2(e)$ in terms of Rice's Ie function

$$Ie(k,x) = \int_0^x \exp(-t)\ I_0(kt)\ dt. \tag{108}$$

For the special case when $SNR_u = SNR_d = \rho_1$, the error probability is simply

$$P_2(e) = \tfrac{1}{2} \exp(-\ \rho_1^{\ 2}). \tag{109}$$

Jain and Blachman proceed to give numerical results comparing their three $P_2(e)$ expression vis' ease of calculation and accuracy and then move on to the comparison of system performance with and without the limiter. These latter comparisons indicate that the limiter produces a 2-3 dB performance enhancement for large uplink SNR (> 10 dB) and a somewhat smaller magnitude degradation for small SNR on the uplink. The authors conclude their work by deriving an optimum nonlinearity to enhance system performance.

A fairly complete picture of the effects a limiter-type nonlinearity has on the performance of wideband satellite systems with AWGN on both the uplink and the downlink has

been presented by the preceding papers [14]-[16]. Obviously, the next step in the analysis of this kind of wideband system is the consideration of a more realistic type of transponder nonlinearity. This step was taken and is discussed in a 1976 paper by P. Hetrakul and D. P. Taylor [17]. Using a quadrature model of the TWTA, the authors developed a model wherein the inphase and quadrature AM-AM characteristics, $F_I[R(t)]$ and $F_Q[R(t)]$ respectively, are assumed to take the form (with the time dependence of R(t) taken for granted)

$$F_I(R) = C_1 R \exp(-C_2 R^2)\, I_o\,(C_2 R^2) \tag{110}$$

$$F_Q(R) = S_1 R \exp(-S_2 R^2)\, I_1\,(S_2 R^2) \tag{111}$$

where $I_n(\cdot)$ is the modified Bessel function of the first kind of order n. Using any TWTA whose transfer characteristics are known, the coefficients of these equations can be found through the use of the fundamental least-squares curve-fitting techniques. For illustrative purposes the authors determined the coefficients for the TWT used on the Intelsat IV satellite; equations (110) and (111) are shown to yield very close fits to the characteristics of the TWTA in question. Representing the signal in the manner introduced by Lyons, Hetrakul and Taylor present an expression of the pseudo-noise pdf's that is in the terms of a Gram-Charlier expansion. Using the notation of the inphase pseudo-noise term,

$$f_{n'_c}(x) = \left(2\pi\sigma_{n'_c}^{\,2}\right)^{-\frac{1}{2}} \exp\left(-x^2/2\,\sigma_{n'_c}^2\right) \sum_{k=0}^{\infty} \frac{b_{2k}}{G}\, H_k\left[\frac{x}{\sigma_{n'_c}}\right] \tag{112}$$

where $G_k[\cdot]$ and b_{2k} are used as defined in [9]. The quadrature term, of course, has the same form.

Following the determination of (112), the authors proceed to give examples of BER determination for BPSK systems with both a majority logic receiver and a matched-filter receiver. Performance of the two receiver types is compared and it is seen that the quadrature model of the TWTA that has been introduced yields results that agree with those of Jain and Blachman [16] for the case of the band-limiting nonlinearity. Substantiating evidence for the results is given in the form of a graph. After concluding that the performance calculations can be extended to the M-ary PSK system, an example of the numerical calculation technique used in the example to derive the moments of the inphase noise component is presented along with proof of the absolute convergence of the derived BER expression.

A different approach to the consideration of a more realistic type of transponder nonlinearity can be found in a 1977 paper by Forsey, Gooding, McLane, and Campbell [18]. Whereas the authors of [17] developed a unique quadrature model of the TWTA, Forsey, et al., stick with the previously introduced method of using the generalized methods of representing the AM-AM and AM-PM transfer characteristics as $f(\cdot)$ and $g(\cdot)$ respectively. Further, the previously discussed paper utilizes the "pseudo-noise" representation of the transponder output that was derived by Lyons [15] while [18] follows the analysis techniques of Jain and Blachman in [16]. In fact, the work presently under scrutiny is just a generalization of the analysis presented by Jain and Blachman for hard-limited, BPSK systems.

The authors open their discussion with the development of the signal as it can be represented at the input to the demodulator with the end product being the same as that given in equation (82). Following a rather brief description of phase compensation, the standard error equation is conjured with the form for the case of the transmitted phase, $\phi_k'=0$, being

$$P_M(e) = \int_{\pi/M}^{(2M-1)/M} q_{\theta|\phi_k=0}(\theta) \tag{113}$$

Solving (113) obviously is the logical progression from the determination of the given conditional probability density function (hereafter denoted by $q(\theta)$) and, therefore, the meat of the work done in this paper is an application of the analysis of [16] to that determination.

Forsey, et al., find $P_M(e)$ through a four-step procedure that begins by conditioning on $R(t)$ and $\beta(t)$ and drawing the resultant pdf

$$q[\theta|R(t),\ \beta(t)] = \frac{1}{2\pi} + \left(\frac{1}{\pi}\sum_{n=1}^{\infty}\frac{\gamma_v^{\,2}}{n!}\left(\frac{n}{2}+1\right){}_1F_1\left(\frac{n}{2};\ n+1;\ -\gamma_v^{\,2}\right)\right.$$
$$\left.\cos\left[n\left(\theta - \beta(t)-g[R(t)]\right)\right]\right) \tag{114}$$

$$\gamma_2^2 = \frac{f^2[R(t)]}{2\sigma_v^{\,2}} \tag{115}$$

from elsewhere in the body of current knowledge. $\Gamma(\cdot)$ and ${}_1F_1(\cdot;\cdot;\cdot)$ are the gamma function and the confluent hypergeometric function respectively and have been defined previously. Step two consists of solving (113) for $q[\theta|R(t),\beta(t)]$--an action yielding a rather long and complex result that, once again, has been taken from other literature. The next step in the solution process is, obviously, the removal of the conditioning on $R(t)$ and $\beta(t)$ which yields

$$P_M(e) = \int_0^{\infty}\int_0^{2\pi} P_M[e|R(t),\ \beta(t)]q[R(t),\ \beta(t)]\ d\beta(t)dR(t). \tag{116}$$

Since the probability density above is just the joint density of the amplitude and phase of the signal that results when narrowband Gaussian noise is added to a sinusoid of known amplitude and phase--a very well-known pdf--then the final step of the solution is to solve (116). The resulting error expression is

$$P_M(e) = \frac{M-1}{M} + \left(\frac{2\exp\left(-\gamma_n^2\right)}{\pi\sigma_n^2} \sum_{n=1}^{\infty} \left[\frac{(-1)^n \Gamma(n/2+1)}{n\Gamma(n+1)(\sqrt{2}\sigma_v)^n}\right] \sin\left(\frac{\pi(M-1)}{M}\right) \xi(n)\right) \tag{117}$$

$$\gamma_n^2 = \frac{A^2}{2\sigma_n^2} \tag{118}$$

$$\xi(n) = \int_0^{\infty} R(t) f^n[R(t)] \cos\left[n\left(g[R(t)] - g(A)\right)\right] \exp\left(-\frac{R^2(t)}{2\sigma_n^2}\right) {}_1F_1\left(\frac{n}{2}; n+1; -\sigma_v^2\right) I_n\left(\frac{2\sigma_n R(t)}{\sigma_n}\right) dR(t) \tag{119}$$

where $I_n(\cdot)$ is as previously defined. It is stated that the infinite series in (117) can be shown to be convergent. A little consideration will reveal that this error expression is, indeed, the generalized form of that presented in [16] for the hard-limited BPSK case.

Following the presentation of (117) the authors proceed to verify their work through the use of an example utilizing a TWTA model drawn from the literature. Although no numerical verification was presented, it is shown that (117) is usable.

After a discussion of the effects of TWT input backoff on system performance, the work is concluded with the assertation that system ISI can be taken into account using the methods already described by Prabhu [6], [10] in combination with basic enumeration.

The work presented in [18] is by far the most complete treatment of the performance prediction problem as it pertains to wideband nonlinear satellite communications systems with significant uplink noise. Unfortunately, when $M > 4$ it becomes a fairly complex task to evaluate the infinite series that appears in the final error expression. In [19], authors Mathews and Aghvami have recognized this deficiency and present an approach designed to skirt the complexity of evaluation while retaining the accuracy for M-ary systems where $M > 4$.

Following the usual signal development up to and including the input to the demodulator, the authors assume that the signal is coherently demodulated (with phase compensation ε) and sampled once every symbol duration yielding,

$$I = f(R)\ \cos[\beta - g(R) + \varepsilon] + v_c \tag{120}$$

$$Q = f(R)\ \sin[\beta - g(R) + \varepsilon] + v_s \tag{121}$$

as the inphase and quadrature components respectively. Using very generalized reasoning, the basics of error probability are given and the expressions for the error probabilities of the binary and quarternary cases conditioned on R and β are developed. After stating that it is not possible to obtain a simple analytical expression for $P_M(e|R, \beta)$ for $M > 4$, the original contribution of [19] is introduced.

From the literature on the principles of communication, Mathews and Aghvami draw general bounds on the BER. These are valid for any type of signal corruption and can be written

$$\tfrac{1}{2}(P_1+P_2) \leq P_M(e) \leq P_1+P_2 \tag{122}$$

$$P_1(e) = \Pr\left[-\infty \leq I \leq \infty;\ -\infty \leq Q \leq 0\right] \tag{123}$$

$$P_2(e) = \Pr\left[-\infty \leq I \leq \infty;\ \tan\frac{2\pi}{m} \leq Q \leq \infty\right]. \tag{124}$$

For linear CPSK systems with noise as the only form of signal corruption, the ½ in the lower bound is replaced by $\frac{M}{M+1}$. The authors propose that this is also true for nonlinear systems thus making the upper bound, $P_1 + P_2$, a good estimate of the true error probability. This estimate is used to develop a generalized conditional error probability,

$$P_M(e|R,\beta) = 1-\tfrac{1}{2}\left[\operatorname{erf}\left(\frac{Q_o}{\sqrt{2}\sigma_v}\right) - \operatorname{erf}\left(\frac{Q_o\cos\left(2\frac{\pi}{M}\right)-I_o\sin\left(2\frac{\pi}{M}\right)}{\sqrt{2}\sigma_v}\right)\right] \tag{125}$$

where I_o and Q_o are I and Q without the v_c and v_s terms respectively. By averaging over all possible values of R and β, the system error probability is obtained. This last step is relatively uncomplicated and straightforward as the joint pdf of the amplitude and phase of a known sinusoid corrupted by a narrowband Gaussian noise process $[q(R,\beta)]$ is well known.

Various and sundry mathematical manipulations lead to the final form of the BER expression that the authors choose to use--albeit a rather arbitrarily chosen one. Picking

expressions for $f(\cdot)$ and $g(\cdot)$ that are used in other works, Mathews and Agvami proceed to compute $P_M(e)$'s for M = 2, 4, 8, and 16 and present the graphs for the latter two. For the binary and quaternary cases, it is found that the results computed are in exact agreement with those from [18]. When the signal is octernary or duo-octernary and the proposed bound is applied using both uplink and downlink E_b/N_o's, the results are seen to be "good" approximations--less than 10% deviation from the true $P_M(e)$'s. The authors conclude that their method is acceptably accurate, much simpler than the calculation of the exact BER, and therefore, much better than the analytical approaches whose culmination is in the work of Forsey and associates.

The most recent analytical approach to a wideband non-linear system with significant uplink noise is described by Yao and Milstein in a 1982 paper [20]. Contending that the final test statistic cannot be adequately approximated as the sum of 2BT independent samples, nor by a majority logic detector utilizing the $\mathrm{sgn}(\cdot)$ function, nor by a single sample, as all of the previously examined work has done, the authors use the moments of the system's output to predict system BER performance. With the same general approach used as that found in the work of Milstein and Davidson [14], a numerical procedure based upon the use of moment space bounds and introduced in earlier work by these authors is presented.

Following common lines of system and signal development, the average error probability of the system is seen to be

$$P_M(e) = E\left[Q - \left(\sum_{i=1}^{N} \alpha_i/\sigma_2\right)\right] \tag{126}$$

$$\sigma_2^2 = N\,\sigma_v^{\,2} \tag{127}$$

where α_i is a sample of the demodulated input to the final integrate and dump detector due to the signal component of the received waveform. Utilizing the moment space bounding technique and more specifically, the isomorphism theorem, two moments bounding the error probability are selected. Through a process not well understood by this researcher, a group of generalized equations are developed that will, with the numerical determination of two sequences of constants, be applicable to systems with arbitrary nonlinearities.

Yao and Milstein proceed to present numerical results for the case of an ideal hard-limiter as the system nonlinearity for various values of uplink and downlink E_b/N_o.

3.1.3 Nonlinear Systems with Uplink Noise and ISI

The last of the analytical methods to be discussed are those that are used on more-or-less realistic systems. That is to say, those approaches that have been applied to the basic PSK system as described at the beginning of this chapter. Unfortunately, the quantity of work within this classification is quite small comprising only four papers--three of which were jointly authored by N. Ekanayake and D. P. Taylor.

In their earliest work [27] (the first to be written, although not the first to be published), Ekanayake and Taylor present what is, essentially, just an extension of the work of Jain and Blachman [16] to M-ary systems with ISI. Like Jain and Blachman, the authors assume that the transponder nonlinearity is an ideal hard-limiter. Additionally, all of the ISI is assumed to arise at the transmit filter while the receive filter is wideband and introduces no signal corruption.

Following the standard signal development up to the transponder input, the authors define an "effective" pulse shape using the quadrature signal components such that

$$s(t-kT_s)\cos\nu(t-kT_s) = p_k\cos\phi_k + \sum_{i\neq k} p_i\cos\phi_i + n_c, \tag{128}$$

$$s(t-kT_s)\sin\nu(t-kT_s) = p_k\sin\phi_k + \sum_{i\neq k} p_i\sin\phi_i + n_s. \tag{129}$$

This gives the satellite input the form

$$X_p = \sum_k s_k\cos(\omega_o t + \nu_k) \tag{130}$$

which leads to the transponder output being a cosinusoid of frequency ω_o, phase ν_k, and an amplitude of unity. In the receiver, the signal is coherently demodulated and sampled as in [18] yielding inphase and quadrature signal components that are written as

$$I = \cos\nu_k + v_c \tag{131}$$

$$Q = \sin\nu_k + v_s$$

for any k-th time period. It is quite easy to see that the determination of the probabilistic character of ν_k has become the focus of the authors' work.

The derivation of the error probability as it proceeds is fairly straightforward. From equations (131) and (132), the expression for the probability of a correct decision $[Q_M(e)]$ is written where, of course, $P_M(e) = 1-Q_M(e)$. $Q_M(e)$ is taken as an expectation over ν and, after some algebraic manipulations, is found to be very similar in form to that given in [16]. In fact, for BPSK with no ISI, the expression $Q_2(e)$ is seen to be identical to that derived by Jain and Blachman. At this point, the only unknown is the pdf of ν.

Since the next logical step is the calculation of $q(\nu)$, that is what Ekanayake and Taylor proceeded to do. Using techniques and solutions previously introduced by Shimbo, et al., in [12], an expression for $q(\nu)$ is given and the moments required for the calculation of the BER are presented. Following these steps, the manipulations required to achieve a relatively simplified expression for $P_M(e)$ are performed.

The paper is concluded with several numerical examples utilizing the transmit filter used in [12] and a single sample per symbol receiver. Various graphs are presented for BPSK and QPSK systems with different BT_s products. Additionally, each graph shows the BER for the case when no ISI is present. For large values of the effective uplink E_b/N_o (> 10dB) it is noted that the calculation of $P_M(e)$ becomes quite tedious and an asymptotic approximation is given so that computational time may be reduced.

A final note must be made about the work just described: For $M > 2$, the authors made a mistake in the derivation of $q(\nu)$. This matter is acknowledged and corrected in an errata announcement published in the "IEEE Transactions on Information Theory," vol. IT-27, no. 1, 1/81, pp 137-138. Although the correction introduces Hermitian functions not found in the original work, the basic premises are found to be quite sound.

In their work immediately following that presented in [27], Ekanayake and Taylor present a method of predicting system performance that is a step backward as far as accuracy is concerned. Recognizing the computational complexity of the method presented previously--one that requires both an exact knowledge of the transmit filter impulse response and the evaluation of an infinite series--the authors present simple upper and lower bounds on the BER of a BPSK system with ISI and a hard-limiting transponder. Since the hard-limiter is assumed to be ideal and with the presumption that no ISI arises in the receive filter, these bounds are very easy to apply requiring knowledge only of the peak value and variance (σ_I^2) of the intersymbol interference. Estimates of these two quantities are generally easy to find and, in fact, can be taken from some of the curves developed in [16].

The development of the signal is pursued in much the same manner as has been seen previously. One of the differences is that the ISI is assumed to be finite and to exist between the limits of $+I_m$ and $-I_m$ where I_m is the maximum possible amplitude of ISI caused by the N pulses preceding and following the given pulse. Another is that the uplink noise and the downlink noise are both given the general form

$$n(t) = n_c(t)\cos(\omega_o t+\phi_k)-n_s(t)\sin(\omega_o t+\phi_k) \tag{133}$$

thus causing the combined phase at the transponder input to be written as

$$\lambda_k(t) = \arctan\left[\frac{n_s}{p_k+\sum_{i\neq k} p_i+n_c}\right]. \tag{134}$$

Since the limiter is assumed to be bandpass and ideal, the output is just a cosinusoid with phase $(\phi_k + \lambda_k)$. The signal

is subsequently corrupted by downlink noise and then coherently demodulated and sampled at the receiver.

With y defined as the numerator of (134) and x as the denominator, the average probability of error is written

$$P_2(e) = E_{x,y}[\tfrac{1}{2}\,\mathrm{erfc}(\cos\lambda_k / \sqrt{2}\,\sigma_v)] \tag{135}$$

and evaluated by integrating over all possible values of the ISI with respect to its distribution function at the sampling instant. A little thought leads one to the fact that the evaluation of (135) is accomplished quite easily in the absence of ISI and is therefore wholly dependent on the unknown distribution of the ISI. If the ISI is identified by x, and the error probability without ISI effects is denoted by $P_g(p_k+\alpha)$, then some reflection on the nature of (135) leads to the bounds

$$\begin{aligned} &|\tfrac{1}{2}[P_g(p_k+I_m) + P_g(p_k-I_m)] - P_g(p_k)|\ \frac{M_1}{I_m} + P_g(p_k) \\ &\geq P_2(e) \geq \tfrac{1}{2}\,[P_g(p_k+m_1) + P_g(p_k-m_1)] \end{aligned} \tag{136}$$

where m_1 is the first absolute moment of the ISI. Since m_1 itself is very hard to specify, the bounds introduced for it in [8] are used. Using curves developed in [16], (136) can be computed and is for a 4th order Che'yshev filter by way of example.

The authors conclude that the bounds presented are acceptably tight so long as $(E_b/N_o)_u$ is greater than $(E_b/N_o)_d$. In general, it is noted that the lower bound is tighter than the upper. Further, the divergence that does occur when downlink E_b/N_o exceeds that of the uplink is seen to approach a constant value with increasing $(E_b/N_o)_d$.

In the two papers just described, Ekanayake and Taylor present two ways to predict a satellite communications system's BER performance. The first allows an exact solution whereas the second is a presentation of acceptable bounds designed to sidestep the computational complexity of the exact solution. In [29], the authors present the third paper on their work in this field. There are no new approaches, however, as the reader is merely given a rehash of work that has already been discussed in [28]. In fact, [29] is just an explication and justification of the work presented in the authors' previous paper and, as such, need not be further explained.

3.2 Monte Carlo-Based Simulations

True Monte Carlo (MC) simulation, although the most accurate predictor of a communications system's performance, calls for an unacceptably large amount of computational time and effort to produce reliable estimates of the BER. Therefore, the technique is not used in its pure form. It is, nonetheless, important to understand the ideas and procedures underlying MC simulation as a great deal of the work on satellite communications system performance prediction is based upon these very same concepts.

The estimation of the probability of error for an M-ary version of the system shown in Figure 1 utilizing pure MC techniques proceeds as follows: First, one generates sequences of sampled values of D(t), n(t), and v(t) using random number generators thus allowing the use of deterministic models of the various system components and elements. The sequence $\{D_k\}$ passes through the transmit filter becoming $\{S_i\}$ such that

$$S_k = h_t(D_k, D_{k-1}, \ldots, D_{k-J-1}) \tag{137}$$

where one can easily see that the system is assumed to have a memory length of J representing the ISI on the uplink. J is selected so that the vast majority of each pulses's energy is accounted for. Following the by now familiar progression of the signal through the system, one arrives at the input to the receive filter $\{U_i\}$. The k-th output of this filter is expressed as

$$Y_k = h_r(U_k, U_{k-1}, \ldots, U_{k-R-1}) \tag{138}$$

where R fulfills the same function for the downlink as J does for the uplink. R and J may be, but are not necessarily, the same.

At this point, $\{Y_i\}$ is sampled at the system bit rate and compared to the decision threshold or thresholds to determine the output bit. The system error counts are obtained by comparing the output of the receiver, $\{b_k'\}$, with the known input bit sequence $\{b_k\}$. In order to estimate the error probability by this direct counting method, the number of samples required, N, is given by

$$N > \frac{1}{\varepsilon^2 P_M(e)} \tag{139}$$

where ε is the normalized error of the estimated $P_M'(e)$. That is,

$$\varepsilon = \frac{\text{standard deviation of } P_M'(e)}{P_M(e)} \tag{140}$$

It is quite easy to see that the minimum number of bits required for accuracy, $N = 10/P_M(e)$, yields a normalized error of $\varepsilon = .32 \approx \frac{1}{3}$ -- an error that may be too high in many cases thus requiring even larger sample sizes. The uselessness of pure Monte Carlo simulation is obvious.

In light of this problem, the objective of all of the simulation-based performance prediction tools is to drastically reduce the sample size requirement without losing any of the flexibility inherent in Monte Carlo simulations. The pursuit of this goal has resulted in the appearance of, roughly, three categories into which the vast majority of simulation tools may be classified. For the following descriptions, these categories shall be known as 1) the Combinatory/Short Sequence or Semi-Analytical approach, 2) the Tail Probability/Extreme-Value Theory approaches, and 3) the Modified Monte Carlo or Importance Sampling approach.

3.2.1 The Semi-Analytical Approach

In the design of a simulation-based performance prediction tool, the foremost goal is the reduction of the required sample size. What makes this goal difficult to realize is the concurrent requirement that the accuracy and flexibility of a true Monte Carlo simulation be retained. The primary cause of the large sample size requirement is the necessity of modeling the uplink and downlink noise using sampled random processes the elimination of which, therefore, would seem to be the answer to the problem. Any analytical representation of noise will, of course, cut down on the flexibility of the tool; however, most noise that is actually encountered can be represented by one of several well known analytical noise models thereby bypassing this objection. Since the downlink

noise encounters only linear system elements there is no problem in using an analytical model for its representation. The uplink noise must pass through a nonlinear transponder however, and one thereby encounters trade-offs in simulation time and accuracy when an analytical treatment is to be utilized. Replacing the random process representations of the uplink and downlink noise with some form of analytical modeling and/or treatment while attempting to retain the flexibility and accuracy of MC simulation yields what may be designated as the semi-analytical method.

Although several slightly different approaches were reviewed, all were essentially the same and the representative papers on the subject [31]-[36] may all be treated and described as one approach. That approach is to completely remove all random processes from within the framework of the simulation. The input sequence is handled by using several short sequences where the system BER becomes the average of the BERs calculated for each sequence so that the ISI effects are still accounted for. In each of the performance prediction tools described in [31]-[36] all of the noise in the system is presumed to arise on the downlink. Some use the rationale that since the uplink S/N is typically much larger than that of the downlink then the effect the uplink noise has on the probability of error is so slight as to be insignificant and can be safely ignored. Others assume that the uplink noise may be significant and compute an "equivalent" downlink noise power using some simple algorithm in a manner vaguely similar to the work of Jain and Blachman [16] or Lyons [15]. In short, the semi-analytical method is comprised of the retention of the "building block" analytical models of Monte Carlo simulation, the use of several short sequences as input to replace that random or partially random signal, and the analytical treatment of the thermal noise as if it were all downlink and thus easily handled in a deterministic manner.

3.2.2 The Extreme-Value Theory/Tail Probability Approaches

The preceding section described the commonly used approach to the prediction of a communications system's performance that entails the alteration of a system's simulation model ,so that the nonlinear transformation of the uplink noise can be handled without resorting to a true Monte Carlo simulation. An alternative or some alternatives to that approach is to assume that a limited amount of Monte Carlo data is to be taken and to use these data to predict the system's BER. Two such alternatives encompass the application of the theory of the asymptotic distributions of extreme values [37]-[42].

Of the two alternatives mentioned above, the earliest to be proposed was the direct and generalized application of the statistical theory of extreme values to communications system performance prediction [37]-[39], [42]. Suggested for and described in the context of a binary system where one is making just one threshold-crossing decision, it is applicable to more complex systems with a corresponding increase in complexity. With the primary assumption that the output and/or degradation of the system output can be represented as a random process possessing a distribution function of exponential type on the right, the application of extreme-value theory is described in the next few paragraphs.

Let one assume for explicative reasons that the transmitted symbol (or symbols) is (are) 0. Further, let $\{X_i\}_n$ represent a sequence of n independent samples drawn from the distribution $F_X(x)$ of the output. If the random variable Z is defined as

$$Z = \text{maximum } (X_1, X_2, \ldots, X_n) \tag{141}$$

then the distribution function $F_Z(z)$ is said to take the asymptotic form

$$\lim_{n \to \infty} F_Z(z) = \lim_{n \to \infty} F_X^{\,n}(z) = \exp\left(-\exp[-a(z-u)]\right). \qquad (142)$$

this lends itself to a linearization yielding

$$-\ln\left(-\ln[F_Z(z)]\right) = a(z-u). \qquad (143)$$

a and u in the previous two equations are unknown parameters of the asymptotic distribution that must be estimated from the Monte Carlo data that is presumed to exist. Since the quantity $-\ln\left(-\ln[F_Z(z)]\right)$, and therefore, the error probability for a given value of z, is now linear in z we can use this theory to estimate a system's BER performance.

Extreme-value theory performance prediction begins by dividing the Monte Carlo data into N groups of m samples. Although there are no optimum procedures specifying the selection of N and m, the theory's requirements call for m to be large enough that the extreme samples have the asymptotic distribution of (143) and for N to be large enough that the extrema from each group of m samples can be used to acquire unbiased estimates of the parameters a and u. Following the division of the data, the estimates of a and u (a' and u') are determined as follows:

1. Select the largest sample from each of the N groups $x_{(1)}, x_{(2)}, \ldots x_{(N)}$ and order them so that $x_{(1)} \geq x_{(2)} \geq x_{(3)} \ldots$

2. Estimate the value of $F_Z(x_k)$ as

$$F_Z'(x_k) = \frac{N+1-k}{N+1} \qquad k = 1, 2, \ldots N \qquad (144)$$

3. Letting $y_k = -\ln\left(-\ln[F_Z'(x_k)]\right)$, plot a "best" linear fit to the data (x_k, y_k) and draw the estimates for a and u from the resulting coefficients.

At this point one may obtain the estimated value of the distribution at the decision threshold level T as

$$F_Z'(T) = \exp\left(-\exp[-a'(T-u')]\right). \tag{145}$$

A diagram of this is shown in Figure 8. Now we know that

$$\begin{aligned} F_Z(T) &= F_X^{\,m}(T) \\ &= [1-P_2(e)]^m \\ &\approx 1 - mP_2(e) \end{aligned} \tag{146}$$

and the estimate for the probability of error is therefore

$$P_2'(e) = \frac{1 - F_Z'(T)}{m}, \tag{147}$$

an estimate which, furthermore, is consistent and asymptotically unbiased.

Study and analysis of the accuracy and of the effectiveness of this method are given, usually assuming a maximum-likelihood receiver. The accuracy is deemed quite acceptable and the effectiveness, that is, the sample size reduction factor from that required for a true Monte Carlo simulation, is shown to be 8 for an error rate of 10^{-5} with a confidence level of 90% and a minimum resolution of less than one order of magnitude. This factor is, of course, expected to be much larger for higher BER's and/or confidence levels.

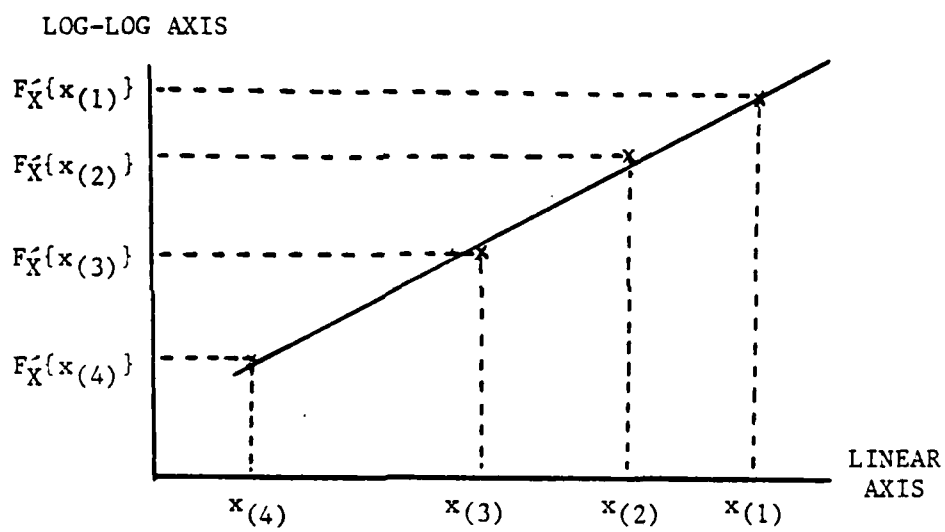

Figure 8 - Extreme-Value Theory Sample Diagram
(for N=4)

Following the basic presentation of this given in [37], [38] and [39] present generalizations of the theory of extreme value distributions in what are essentially efforts to prove the validity of the application presented by Posner while pointing out some of the mistakes and misinterpretations commonly made. It is noted that the main problem encountered is that the convergent sequence in (142) is frequently assumed to apply when, in fact, there is no convergence. This, of course, leads to inaccurate and bad estimation of system error probabilities. Letting $w = a(z-u)$ and assuming the existence of some sequence $\{d_k\}$, Weinstein [38] rewrites equation (142) as

$$\lim_{n \to \infty} F_Z(z) = \lim_{n \to \infty} V^n\left[\left(z^v + \frac{w}{d_n}\right)^{\frac{1}{v}}\right] \tag{148}$$

$$= \exp[-\exp(-w)]$$

where $V(\cdot)$ is probability distribution and $v > 0$. With the introduction of this form, he proceeds to define the necessary and sufficient conditions for the convergence of (148). v has been introduced primarily as a generalizing factor in the equation that more adequately shows the true nature of the convergence to the extreme-value asymptote. He proceeds to show how (148) leads to a more consistent and accurate BER estimator. In [39], Jeruchim elucidates the applications of this generalized estimator and its potential pitfalls.

The second alternative to be based upon the theory of the asymptotic distribution of extreme values is presented by Weinstein and follows, albeit somewhat indirectly, from the generalization he presented in [38]. Noting that in some cases substantial inaccuracies are inherent in the use of an

asymptotic distribution instead of the actual extreme-value distribution, he derives a BER estimator that is very specifically directed towards communications systems.

Weinstein begins with the assumption that there is a general class of probability distributions that most communications system degradation may be described by. With the requirement that this class of distributions be linearized by a known transformation into a simple function of the argument, he describes these distributions by the probability density function

$$q_{a,\sigma}(x) = \frac{a}{\sigma\Gamma(1/a)} \exp[-(x/\sigma)^a] \tag{149}$$

where $\Gamma(\cdot)$ is the Gamma function. The random variables described by (149) are called the higher exponential class of random variables.

Considering, once again, a binary system, the probability of error can be written as

$$P_2(e) = \int_T^\infty q_{a,\sigma}(x)\, dx \tag{150}$$

where T is the threshold and a 0 is presumed to have been transmitted. The well known asymptotic expansion of this equation leads to

$$P_2(e) \approx \exp(-T^a) \qquad T >> 1. \tag{151}$$

which is, of course, linearized by a double logarithmic transformation to the form

$$\ln\left(-\ln[P_2(e|0)]\right) \approx a \ln(T). \tag{152}$$

Taking this linearization, Weinstein uses an extrapolation technique similar to that described earlier in this section to acquire an estimate of the error probability. The procedure is as follows:

1. Select three extrapolation thresholds, x_1, x_2, and x_3 such that a small portion of N Monte Carlo data observations exceeds x_3. The three thresholds should be selected to be uniformly spaced in logarithmic scale.

2. Calculate the estimated probability of error, $P_2'(e|x_k)$, for each of the thresholds as

$$P_2'(e|x_k) = \frac{n_k}{N} \tag{153}$$

   where n_k is the number of observations that exceed x_k.

3. Plot a "best" linear fit to the data $[x_k, P_2'(e|x_k)]$ and draw the estimate of a from the coefficients.

4. At this point the estimated probability of error for the threshold T can be found from

$$P_2'(e|T) = \exp(-T^{a'}). \tag{154}$$

Examinations of this estimator have shown that with proper selection of x_1, x_2, and x_3, it is acceptably accurate, consistent and relatively unbiased. There are no procedures for the selection of the optimum values of the x_k, and they are usually chosen as a compromise between an excessive sampling variance when they are too large and an unacceptable amount of estimation bias when they are too small.

The sample size reduction factor for this "tail probability" approach is shown to be roughly 3.8 when a = 1, 18 when a = 2, and 54 when a = 3. In the binary system case, an additional factor of 2 applies for all values of a. These numbers are derived for a probability of error of 10^{-6}.

AD-A148 689 A MODIFIED MONTE-CARLO TECHNIQUE FOR THE SIMULATION OF SATELLITE COMMUNIC..(U) KANSAS UNIV/CENTER FOR RESEARCH INC LAWRENCE K S SHANMUGAN 30 OCT 84 TR-617-1 2/2

UNCLASSIFIED AFOSR-TR-84-1049 AFOSR-83-0171 F/G 12/1 NL

END

FILMED

DTIC

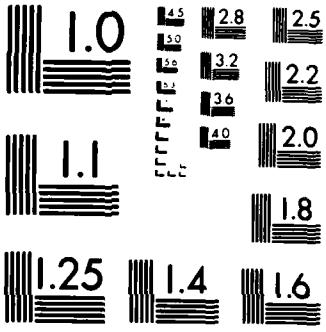

MICROCOPY RESOLUTION TEST CHART
NATIONAL BUREAU OF STANDARDS 1963 A

3.2.3 The Importance Sampling Approach

The last of the three simulation approaches is what is known as the importance sampling or modified Monte Carlo approach [43]-[46]. Like the extreme-value theory approaches, importance sampling, as applied to performance prediction, is based upon true Monte Carlo simulation methods. That is, the communications system BER is estimated from a set of Monte Carlo observations rather than using the analytical techniques described in Section 3.2.1.

Importance sampling is applied to the same basic system that has been discussed throughout this chapter and in the preceding chapters. The formulation of the problem, however, can be stated in a somewhat different manner. To begin, one assumes that the input-output relationship of the communications system in question is known. In addition, the statistics of the inputs to the system are assumed to be known.

Our desire is to use this knowledge to estimate the probability density function of the output from which we can derive an estimate of $P_M(e)$. If the system is once again assumed to be binary, then the error estimate can again be written as

$$P_2'(e) = \int_{\kappa}^{\infty} f_{Y_k}'(y)\, dy \tag{155}$$

where κ is the decision threshold and f_{Y_k}' is the estimated pdf of the output sequence $\{Y_k\}$. It has already been presumed that the error estimate will come from a group of N Monte Carlo observations. This means that

$$P_2'(e) = n_j/N \tag{156}$$

where n_j is the number of the output observations that exceed κ. The number of output samples required to estimate the error probability via Monte Carlo simulation is, however, known to be given by

$$N > 1/\varepsilon^2 P_M(e) \tag{157}$$

with ε being the normalized error of the estimate $P_2(e)$ (for $\varepsilon = 1/\sqrt{10}$ this yields $N > 10/P_M(e)$ mentioned earlier). Since (157) requires that N be unacceptably large for an acceptably small ε given typical communications systems error probabilities, the problem becomes one of estimating f'_{Y_k} to minimize ε for a reasonable and acceptable number N of observations of the system output.

In the application of importance sampling to the problem stated above, the principle is to reduce the sample size requirement by modifying the statistical properties of the systems input sequence. This causes a significantly higher than normal number of errors to occur in the course of the Monte Carlo simulation. This modification must be compensated, of course, by weighting the error estimation of the true BER.

The quantity that equation (155) is estimating is written

$$P_2(e) = \int_{\theta}^{\infty} f_Y(y)\, dy. \tag{158}$$

It can be rewritten as

$$P_2(e) = \int_{-\infty}^{\infty} d(y)\, f_Y(y)\, dy \tag{159}$$

where we have defined $d(y) = 1$ if y exceeds the threshold θ and 0 otherwise. In importance sampling, a modified pdf

$f^*_Y(y)$ is introduced that is superior for sampling purposes. Equation (159) can therefore be rewritten

$$P_2(e) = \int_{-\infty}^{\infty} d(y) \frac{f_Y(y)}{f^*_Y(y)} f^*_Y(y)\, dy$$

$$= \int_{-\infty}^{\infty} d^*(y) f^*_Y(y)\, dy. \tag{160}$$

The modified output pdf is derived by biasing the pdf of the input and (156) now becomes

$$P_2'(e) = \frac{1}{N} \sum_{i=1}^{N} d^*(y_i) \tag{161}$$

with y_i the i-th element of the output sequence $\{Y_k\}$ that is produced by using the biased input sequence.

In the implementation of the modified Monte Carlo technique one follows essentially the same procedures as in true Monte Carlo simulation. There are, however, some rather obvious differences. From (160) it is seen that the output samples will have a bias that is given by the ratio $f^*_Y(y)/f_Y(y)$. It is therefore obvious that the input samples will have a probability bias $B(x)$ which is the ratio $f^*_X(x)/f_X(x)$. The weight that must be given to the effect of the sample, $W(x)$ is, therefore, the inverse of the bias. Since $\{Y_k\}$ is determined from $\{X_k\}$, the probability that the i-th sample of $Y = y_i$ is also assumed to have the bias $B(x_i)$ and thus the weight $W(x_i)$. The probability estimate determined using equation (156) must therefore be weighted by the average of the weights of all of the n_j samples that are observed to exceed the threshold [as shown by equation (161)]. In other words,

$$W_{avj} = \frac{1}{n_j} \sum_{i=1}^{n_j} W(x_{ij}). \tag{162}$$

If one now assumes that there exist N observations of the output of a system having an input whose pdf has been biased by B(x), then equations (156) and (161) yield an estimate of the probability of error as

$$P_2'(e) = W_{avj}\ n_j/N$$

$$= \frac{1}{N} \sum_{i=1}^{n_j} W(x_{ij}) \tag{163}$$

which can be shown to be an unbiased estimator: The advantage of using this modified estimator is that for a particular sample size the variance from equation (163) will be smaller than that from (156) if B(x) is chosen to be >1 for every value of $x \in I_j = \{x | y = g(x) \in [y > \theta]\}$. This variance reduction may be computed as follows.

The variance of the estimator of equation (156) is given by

$$\sigma_c^2 = \frac{P_2'(e)[1-P_2'(e)]}{N_c}$$

$$\approx P_2'(e)/N_c \tag{164}$$

$$= \frac{1}{N_c} \int_{I_j} f_x(x)\ dx.$$

where N_c is, of course, the number of observations taken for the application of the Monte Carlo estimator with our unbiased input. The variance of the modified estimator of (163) is given by

$$\sigma_{is}^2 \approx \frac{1}{N_{is}} \int_{I_j} W(x)\ f_X(x)\ dx \tag{165}$$

where W(x) is as previously defined and N_{is} is the sample size from a simulation with a biased input. For the case of $N_{is} = N_c$, the variance reduction factor becomes

$$\frac{\sigma_{is}^2}{\sigma_c^2} = \frac{\int_{I_j} W(x)\ f_X(x)\ dx}{\int_{I_j} f_X(x)\ dx}. \tag{166}$$

Alternately, if it is assumed that the normalized error as given by (157), rather than the sample size, is held constant, i.e., $\varepsilon_c = \varepsilon_{is}$, then the sample size reduction factor is given by

$$\begin{aligned} r &= N_c/N_{is} \\ &\approx \frac{\sigma_c^2}{\sigma_{is}^2}. \end{aligned} \tag{167}$$

From the previous paragraph it may easily be seen that a system's BER may be estimated very accurately from a small group of observations provided that the input pdf has been biased such that those portions of the output pdf from which errors are drawn are very heavily biased [B(x) >> 1]. Unfortunately, causing some portions of the output pdf to be heavily emphasized causes the rest to be heavily de-emphasized. This means that we cannot accurately estimate the probabilities

of error that are drawn from the de-emphasized portions of the output pdf; however, we are uninterested in those probabilities, and thus this is not a problem.

A modified Monte Carlo technique utilizing importance sampling has now been described. The implementation can, however, be a very complicated matter. In a complex system one does not necessarily know beforehand what regions of the input pdf must be biased to produce the desired bias of the output pdf. Fortunately, in most communications systems the causes of performance degradation frequently have Gaussian probability density functions. Therefore, one need only bias the tails of the input pdf's to emphasize the desired portions of the output pdf's. Methods of doing this and the derivations of an optimum biasing function are given in [43]-[46].

In addition to the application of importance sampling that is mentioned above, [43]-[46] describe the extension of the technique to the case of M independent system inputs. This is shown to be rather simple and very straightforward. Experimental results on the application of this modified Monte Carlo technique verify its usefulness as a performance prediction tool. In a system having no ISI, the sample size reduction factor varies from 45 - 25,500 depending upon the desired probability of error to be estimated. With ISI extending across five symbols, the reduction factor is shown to be on the order of 7 - 1000. Overall, the modified Monte Carlo approach is shown to meet the previously stated requirements with its advantage over true Monte Carlo simulation increasing as the desired estimation error or estimated $P_M(e)$ are decreased.

4.0 PROPOSAL AND EXAMINATION OF A PERFORMANCE PREDICTION TOOL

In the previous chapter, many different ways to predict the performance of a satellite communications system were examined. These approaches were divided into two main categories--the analytical methods and the simulation-based methods--and comprise a very large number of assumptions, mathematical tricks and techniques, and unique ways of looking at the "typical" system. Each of these tools were examined to see if they satisfied the requirements for a performance prediction tool as stated in Chapters 1 & 2. Some of them failed because they did not address the effect of a nonlinearity on a system's performance. Others ignored the bandlimiting character of most real systems or else assumed that there was no noise added prior to the nonlinearity. Many of the approaches looked at in Chapter 3 sacrificed flexibility for accuracy (and vice versa) while still others were so computationally complex as to be unfeasible. Most failed to meet the requirements for combinations of these reasons.

In the last two chapters the advantages of the simulation based approaches over the analytical approaches have been stated time and again. Although this may not be true for all possible simulation-based or analytical methods, it is true in general with regards to the research that has been conducted to date. Therefore, all further discussions shall center entirely upon the simulation-based category of performance predictors.

Of the three subcategories comprising the simulation-based performance prediction tools, each has its advantages and disadvantages, yet none of the particular methods described

in the previous chapter has all of the desired properties of the ideal prediction tool. The semi-analytical approach is what most people use presently and thus it offers little or no room for improvement. Extreme-value theory is, however, very interesting as is the importance sampling approach. These latter two techniques offer sample size reduction factors ranging from 3.8 up to many thousands while retaining most of the advantages of true Monte Carlo simulation. In fact, the only significant drawbacks these methods have are that they still don't reduce the sample size enough for a given estimation variance. All in all, these methods would seem to merit further examination.

4.1 The Proposal

As a review, let us state briefly the basic mechanisms by which Weinstein and then Shanmugam and Balaban achieve their sample size reductions. Weinstein's method is one of "graphic extrapolation" wherein direct counting of errors is used to determine three, manageably large BER's for three, evenly spaced error thresholds x_i that are smaller than the threshold of interest x_K. The selection of the x_i's is governed by a trade-off between the sample size required to accurately estimate the BER at the largest x_i, x_3, and the desire to have x_3 as close as possible to x_K so as to reduce the variance of the estimator. This trade-off is sample-size limited to the selection of an x_3 that yields a $P_M(e)$ in the range of 10^{-4} to 10^{-5}. On the other hand, the Modified Monte-Carlo method proposed by Shanmugam and Balaban is not strictly sample-size limited at all. Their method requires that one have a prior knowledge of the statistical character of the uplink noise especially with regards to that portion

of the uplink noise pdf that directly influences the number of errors to be seen for a given threshold. A little thought will indicate that a reasonably good idea of the statistical nature of the output signal is also a necessity. With the required statistical knowledge in hand, one biases the pdf of the uplink noise so that more errors occur for a given threshold, counts the errors for a time sufficiently long to yield an accurate and precise estimate and then removes from this estimate the bias that was introduced to the uplink noise. The sample size is again limited to that needed to determine a BER in the range of 10^{-4} to 10^{-5} yet the determining factor in the variance of the estimator is more the accuracy of the biasing applied to the uplink noise statistics than in how much smaller the estimated BER is from the counted $P_M(e)$ used in the estimation.

With the mechanisms of these two methods in mind, it is time to directly address the driving force behind this study: The discovery and/or development of a performance prediction tool for satellite communications systems that more closely approximates the "ideal" performance prediction tool described in the first chapter than do the analytical and simulation-based predictors in use at present. Each of the methods that have been examined has been shown to have significant drawbacks. With the exceptions of Weinstein's method and the importance sampling approach of Shanmugam and Balaban, each of the performance prediction tools examined has been shown to be unacceptable for one reason or another. To be thorough, in fact, not even the two exceptions are without their problems. In short, something different needs to be examined and, hopefully, developed to fruition.

A different, although not entirely new approach to the performance prediction tool problem will be offered at this time. When one considers the two approaches that were

previously identified as being the best of those that are now available for use, it is easy to see that they are rather complimentary in nature. That is, Shanmugam and Balaban's method alters the statistics of the uplink noise in such a way that either the number of samples that need to be looked at to estimate a given BER, or the variance of an estimate of that BER, are reduced from pure Monte Carlo requirements whereas Weinstein's extrapolation method merely lowers the number of errors that need to be counted to estimate that given BER. It should be a fairly straightforward task to take the two methods and meld them into a new tool that is based upon the latter and uses the former to reduce either the sample size requirement or the variance of the estimator. In short, this proposal is to combine the two best approaches into one with the hope of counteracting the disadvantages of each while enhancing the advantages.

The specifics of the proposed approach, hereafter to be known as the Modified Extrapolation Approach, are really quite simple and are as follows:

1. One begins by determining the expected order of magnitude of $P_M(e)$.

2. Define a maximum number of samples, N_{me}, that are to be taken for error counting purposes. This will be of the available computational time as well as the minimum number of errors that must be counted to yield a reasonable estimate of $P_M(e|K)$ where K is the decision threshold (to keep the variance small, it is desirable to handle as close to the same number of samples as required by Monte Carlo estimation).

3. Knowing N_{me}, the largest of the Weinstein extrapolation thresholds, x_{3me}, can be specified. This will depend on whether the modified Monte Carlo method is to be applied to further reduce the sample size or to lower the estimation variance.

4. From x_{3me} determine the other two extrapolation thresholds.

5. Apply the bias to the input noise pdf and start counting errors.

4.2 Evaluation of the Proposal

The first order of business in evaluating the proposal of section 4.1 is the determination of criteria by which performance is to be judged. Since the implementation of the Modified Extrapolation approach can be broken down into the separate implementations of its two component approaches, it may reasonably be assumed that the selections of the extrapolation thresholds, the bias, B(x), etc., can be based on the criteria presented by Weinstein or Shanmugam and Balaban without having any adverse effect on the performance. It has already been established that performance prediction tools are judged on the basis of accuracy, flexibility, and speed of execution. By the nature of the two approaches that are being combined it is easily seen that Modified Extrapolation is as flexible as anything that now exists short of the pure Monte Carlo technique. We are, therefore, left to consider the accuracy (variance) of the estimate and the speed with which that estimate is made (or, stated another way, the sample size reduction that is achieved).

A little thought will suffice to convince one that neither an analysis of the variance (or variance reduction) or the sample size reduction will be independent of the other. In order to study the effect that the proposed Modified Extrapolation method has on the variance of the estimate relative to either or both of its component methods, the sample sizes must be the same, and vice versa. In other words, testing

one is effectively the same as testing the other given that an equal importance is placed on the two. This assumption has been and will continue to be made. Since the previous discussions in this paper have tended to center on the sample size requirement instead of the variance, the following evaluation of the Modified Extrapolation technique will do the same. In other words, the evaluation will consist of comparing the sample size requirements of Weinstein's, Shanmugam and Balaban's, and the Modified Extrapolation techniques for a given variance and probability of error. For clarity's sake, the pure Monte Carlo methods will also be included in the comparison.

Parameters and constants used in the analysis that is to follow have been selected on the basis of consistency with those selected and derived by the authors of the methods to which they apply. The desired threshold, K, was chosen to yield a $P_M(e) = 10^{-6}$. For the constant variance, it was decided that the selection of a normalized error [see equations (139) and (140)] of 0.1 was reasonable as well as computationally convenient. The bias applied to the uplink noise pdf is

$$B(x) = c/[f_n(x)]^{\alpha} \tag{168}$$

where c is a constant such that

$$c = [(1-\alpha)/(2\pi)^{\alpha}]^{\frac{1}{2}}. \tag{169}$$

From Shanmugam and Balaban, values for x and c have been chosen.

The analysis itself will consist of two parts. To begin, expressions for the variances of each of the estimators will be either given or derived to an extent that should provide sufficient justification. The second part will be the actual specification of thresholds, constants, etc.,

followed by the calculation of the sample size requirement of each estimator for the prescribed conditions.

4.2.1 Variance Calculations

A BER estimator variance analysis must, of course, begin with the derivation of the variance of a pure Monte Carlo estimator. Assuming that the estimator is to be applied to a binary system, as has been done throughout this study, then the threshold test on each received bit is an obvious Bernouli trial. To illustrate the usefulness of this fact, assume that the data to be transmitted are all 0's. Let the output of the decision logic be $Y = y_j$ a random variable with a binomial distribution. The expected value and the variance of Y are then known to be

$$E[Y] = \mu_Y = np \tag{170}$$

$$E[Y^2] - E[Y]^2 = \sigma_Y^2 = np(1-p) \tag{171}$$

where n is the number of bits transmitted and p is the bit probability of error. When p is to be estimated using the error counting technique with N_c samples being examined, then the estimator of p, p´, is

$$p' = \frac{1}{N_c} \sum_{i=1}^{N_c} y_i \ . \tag{172}$$

The mean of this estimator is

$$
\begin{aligned}
E[p'] &= E\left[\frac{1}{N_c} \sum_{i=1}^{N_c} y_i\right] \\
&= E\left[\frac{1}{N_c} Y\right] \\
&= \frac{1}{N_c} E[Y] \\
&= p
\end{aligned}
\tag{173}
$$

and the variance is thus

$$
\begin{aligned}
\sigma_c^2 &= E\left[p'^2\right] - E\left[p'\right]^2 \\
&= E\left[\frac{Y^2}{N_c^2}\right] - E\left[\frac{Y}{N_c}\right]^2 \\
&= \frac{1}{N_c^2} \left(E\left[Y^2\right] - E\left[Y\right]^2\right) \\
&= \frac{p(1-p)}{N_c} .
\end{aligned}
\tag{174}
$$

Since the probabilities of error being dealt with are $P_M(e) << 1$, the variance may be approximated as

$$\sigma_c^2 \approx \frac{p}{N_c} . \tag{175}$$

The variance of the modified Monte Carlo estimator of Shanmugam and Balaban is quite easily approximated by the integral

$$\sigma_{is}^2 \approx \frac{1}{N_{is}} \int W(x) f_X(x) dx \tag{176}$$

where $W(x) = \frac{1}{B(x)}$ is the weighting function for the output and $f_X(x)$ is the unbiased pdf of the input noise. Unfortunately, as personal experience and conversations with K. S. Shanmugam bear out, this expression is not analytically tractable in general. Shanmugam and Balaban, however, have generated sufficient data to make a plot of sample size reduction factor, r, versus $P_M(e)$ which is reproduced here as Figure 9. Since the determination of r requires a fixed normalized error, ε, it is possible to determine an empirical expression for the importance sampling variance.

The procedure taken to find σ_r^2, the variance of the sample size reduction factor, is essentially just that needed to determine the equation of the line on the plot shown in Figure 9. Both axes are seen to be on a logarithmic scale so that the equation of the line is log y = m log x + b. The solution proceeds as follows. It is known that

$$\sigma_{is}^2 = \sigma_c^2 = \frac{P_M(e)}{N_c}$$

$$y = r = \frac{N_c}{N_{is}}$$

$$x = P_M(e)$$

and

$$N_c = \frac{1}{\varepsilon^2 P_M(e)} \quad .$$

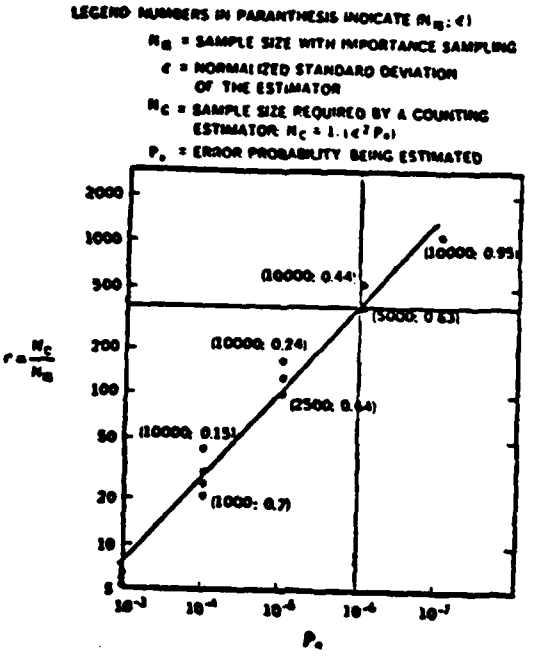

Figure 9 - Plot of Modified Monte Carlo Simulation Results: Sample Size Ratio vs. $P_M(e)$

Reproduced from K. S. Shanmugam and P. Balaban, "On a Modified Monte-Carlo Simulation Technique for Estimating Error Rates in Digital Communications Systems," IEEE Tr. on Commun., vol. 28, Nov. 1980, pp. 1916-1921.

At this point, the expression for the importance sampling variance may be "derived" via the step shown below.

$$\begin{aligned} \log r &= m \log P_M(e) + b \\ r &= (10^b)[P_M(e)]^m \\ &= \frac{N_c}{N_{is}} \\ N_c &= rN_{is} \\ &= N_{is}(10^b)[P_M(e)]^m \\ \sigma_{is}^2 &= \frac{P_M(e)}{N_c} \\ &= \frac{[P_M(e)]^{1-m}}{10^b N_{is}}. \end{aligned} \tag{177}$$

From Figure 7, m is found to be -0.6. Selecting the point on the line where $r = 400$ and $P_M(e) = 10^{-6}$, b is found to be -1.0 and the variance is thereby written

$$\sigma_{is}^2 = 10 \frac{[P_M(e)]^{1.6}}{N_{is}} \tag{178}$$

Variance expressions for two of the four performance predictors being compared in this analysis have been determined. The third method to be looked at is Weinstein's tail probabilities approach [40]. To begin the derivation, recall the three-threshold case and procedures described in the previous chapter. Note that $y_K = \ln\left(-\ln[P_M(e|K)]\right)$ where K is the

threshold for which it is desired to estimate the BER. From Weinstein's paper we know that the estimate of y_K, y_K', is

$$y_K' = a_1 y_1' + a_2 y_2' + a_3 y_3' \tag{179}$$

where

$$a_1 = \frac{1}{3} - \frac{\ln K - \ln x_2}{\ln x_3 - \ln x_1} = -1.431$$

$$a_2 = \frac{1}{3}$$

$$a_3 = \frac{1}{3} + \frac{\ln K - \ln x_2}{\ln x_3 - \ln x_1} = 2.097 \tag{180}$$

The variance for the tail extrapolation method is easily seen to be

$$\mathrm{var}(y_K) = \sum_i \sum_j a_i a_j \, \mathrm{cov}(y_i, y_j) \tag{181}$$

Weinstein notes that for small perturbations in $P_M'(e|x_j)$,

$$\Delta y_j \approx \left(\frac{dy_j}{dP_M(e|x_j)}\right) \Delta P_M'(e|x_j)$$

$$= [P_M(e|x_j) \ln P_M(e|x_j)]^{-1} \Delta P_M'(e|x_j), \tag{182}$$

If the covariance of the BER estimates is small, it is seen that

$$\mathrm{cov}(y_i, y_j) \approx \frac{\mathrm{cov}\,[P_M'(e|x_i), P_M'(e|x_j)]}{P_M(e|x_i) P_M(e|x_j) \ln P_m(e|x_i) \ln P_M(e|x_j)} \tag{183}$$

$$\approx \frac{P_M(e|x_n)/N_{te}}{P_M(e|x_i)\ P_M(e|x_j)\ \ln P_M(e|x_i)\ \ln P_M(e|x_j)} \tag{184}$$

where $n = \max(i,j)$ and N_{te} is the tail extrapolation sample size. With the assumption that the $\{P_M(e|x_m)\}$ have Gaussian distributions, (184) can be plugged back in to (181) and the variance of the estimator may be calculated. Although using (181) promises to be rather difficult, it may be verified numerically that the $i = j = 3$ term dominates and thus, the variance of y_K may be written

$$\begin{aligned} \mathrm{var}(y_K) &\approx \frac{a_3^{\,2}}{[P_M(e|x_3)\ \ln P_M(e|x_3)]^2}\ \frac{1}{N_{te}}\ P_M(e|x_3) \\ &= \left(\frac{a_3}{P_M(e|x_3)\ \ln P_M(e|x_3)}\right)^2\ \mathrm{var}[P_M'(e|x_3)] \end{aligned} \tag{185}$$

from which it is seen that

$$\sigma_{te}^2 = a_3^{\,2}\left(\frac{P_M(e|K)\ \ln P_M(e|K)}{P_M(e|x_3)\ \ln P_M(e|x_3)}\right)^2\ \mathrm{var}[P_M'(e|x_3)]. \tag{186}$$

The final variance derivation is for the Modified Extrapolation technique that has been proposed in this chapter. Derivation, however, is too strong of a word for what needs to be done to determine σ_{me}^2. If it is remembered that the proposal is to use the Modified Monte Carlo method to estimate the BER for the third extrapolation threshold used in Weinstein's approach, then the determination becomes the substitution of (178) for the $\mathrm{var}[P_M'(e|x_3)]$ in (185). The expression for the

variance of the proposed estimator is then

$$\sigma_{me}^2 = a_3^2 \left(\frac{P_M(e|K) \ \ln P_M(e|K)}{P_M(e|x_3) \ \ln P_M(e|x_3)} \right)^2 \frac{10}{N_{me}} [P_M(e|x_3)]^{1.6} . \tag{187}$$

4.2.2 Performance Comparisons

A Gaussian distribution is assumed from which $P_M(e)$ is drawn for the following comparisons: With $P_M(e|K)$ chosen to be 10^{-6}, $K = 4.78$. Since it has already been stated that 10^5 samples are at the upper limit of feasibility for pure Monte Carlo testing, the third threshold, x_3, will be selected to yield a $P_M(e|x_3) = 10^{-4}$: $x_3 = 3.70$. Using the requirement that x_1, x_2, and x_3 be selected to be evenly spaced on a logarithmic scale along with what is known from the equations for the a_i's, the remaining two thresholds are chosen as $x_1 = 3.02$ and $x_2 = 3.35$.

A normalized error of 0.1 has already been specified so that the sample size requirements may be computed as follows from one of the two definitions of ε:

$$\varepsilon^2 = \frac{1}{N_c P_M(e)} \tag{188}$$

$$\varepsilon^2 = \left(\frac{\sigma}{P_M(e)} \right)^2 . \tag{189}$$

For the error counting case,

$$N_c = \frac{1}{\varepsilon^2 P_M(e|K)} .$$

Shanmugam and Balaban's method leads to

$$N_{is} = \frac{10}{\varepsilon^2 (P_M(e|K)^4}$$

while the tail extrapolation approach yields

$$N_{te} = \frac{a_3^2}{\varepsilon^2} \left(\frac{\ln P_M(e|K)}{P_M(e|x_3) \ln P_M(e|x_3)} \right)^2 P_M(e|x_3).$$

Finally, the Modified Extrapolation technique requires a sample size of

$$N_{me} = \frac{a_3^2}{\varepsilon^2} \left(\frac{\ln P_M(e|K)}{P_M(e|x_3) \ln P_M(e|x_3)} \right)^2 10[P_M(e|x_3)]^{1.6} .$$

Table 1 presents the results of these calculations.

TABLE 1

COMPARISON OF SAMPLE SIZE REQUIREMENTS

P (e K)	ε	Method	# Samples
10^{-6}	0.1	Monte Carlo	$N_c = 10^8$
10^{-6}	0.1	Importance Sampling	$N_{is} = (2.51)10^5$
10^{-6}	0.1	Tail Extrapolation	$N_{te} = (9.89)10^6$
10^{-6}	0.1	Modified Extrapolation	$N_{me} = (3.94)10^5$

5.0 SUMMARY AND CONCLUSIONS

In the past four chapters a fairly thorough study of the search for an "ideal" performance prediction tool has been made. This study has attempted to present a comprehensive view of the need for an efficient, accurate, in short, a near-ideal predictor for use in the analysis and design of digital communications systems both in general and in specific application to satellites. Chapters 1 and 2 laid the foundation for an understanding of the basic problem that confronts satellite communications systems designers and the need for a performance prediction tool that is accurate, flexible, easy to use, and computationally efficient (fast). In Chapter 3 a fairly comprehensive view of the current state of affairs is presented along with a review of past work and its historical development. Finally, in Chapter 4, the best of the tools that have already been proposed are identified and a combination of these is proposed and examined.

It was discovered that there are two distinct categories that the extant performance prediction tools fall into: the analytical approaches and the simulation-based approaches. While the former were recognized as fulfilling the speed requirements, they were shown to be inadequately flexible and, with the increasing use of TDMA, insufficiently accurate vis' the effects the nonlinearly operated TWTAs have on the noise-corrupted uplink signal. On the other hand, the simulation-based approaches were shown to be computationally too slow or else relatively inaccurate with the two characteristics in a mutually exclusive trade-off. Overall, however, the simulation-based tools were found to be superior to the analytical ones and two were identified as fulfilling the

greatest number of the requirements presented in the first two chapters: Weinstein's tail extrapolation method and Shanmugam and Balaban's modified Monte Carlo approach.

In an attempt to create a new and better performance predictor, it was noticed that the two tools identified as having the most potential seemed to compliment one another. Consequently, it was proposed that a new prediction tool, called the Modified Extrapolation technique, be applied using what were seen as the best of the characteristics of both Shanmugam and Balaban's and Weinstein's tools. The proposed new predictor was described and a variance/sample size reduction analysis was performed to check the validity of the proposal. It was discovered that the Modified Extrapolation method, while not as good as Shanmugam and Balaban's approach, is indeed better than anything else that has previously existed or been proposed. However, the sample size reduction is less than 3dB worse than the modified Monte Carlo technique for the normalized errors selected and examined in the last chapter. When all of the assumptions that have been made during the formulation and analysis of the two methods are taken into account, it is reasonable to state that the difference in required sample sizes is insignificant. Due to the increase in complexity presented by the new technique over its close competitor, one must conclude that the modified Monte Carlo technique of Shanmugam and Balaban is superior for the normalized error and error probability of the typical satellite communications system. Remember, however, that the sample size reduction factors of both Weinstein's method and Shanmugam and Balaban's approach increase as the BER decreases. It can be seen, therefore, that the Modified Extrapolation will, for some BER $< 10^{-6}$, be superior to the importance sampling technique.

REFERENCES

[1] K. S. Shanmugam, Digital and Analog Communication Systems, Wiley, New York, 1979.

[2] W. C. Braun, "Analytic Simulation of Nonlinear Satellite Links," Proc. International Telemetering Conference, San Diego, California, October, 1980.

[3] J. J. Jones, "Filter Distortion and ISI Effects on PSK Signals," IEEE Trans. Comm. Tech., vol. 19, April 1971, pp. 120-132.

[4] B. R. Saltzberg, "Intersymbol Interference Error Bounds with Application to Ideal Band-Limited Signaling," IEEE Trans. Inform. Theory, vol. IT-14, July 1968, pp. 563-568.

[5] R. Lugannani, "Intersymbol Interference and Probability of Error in Digital Systems," IEEE Trans. Inform. Theory, vol. IT-15, November 1969, pp. 682-688.

[6] V. K. Prabhu, "Performance of Coherent Phase-Shift Keyed Systems with Intersymbol Interference," IEEE Trans. Inform. Theory, vol. IT-17, July 1971, pp. 418-431.

[7] T. S. Koubanitsas, "Performance of Multiphase PSK Systems with ISI," IEEE Trans. Commun., vol. COM-22, October 1974, pp. 1722-1726.

[8] P. J. McLane, "Lower Bounds for Finite ISI Error Rates," IEEE Trans. Commun., vol. COM-22, June 1974, pp. 853-857.

[9] O. Shimbo and M.I. Celebiler, "The Probability of Error Due to Intersymbol Interference and Gaussian Noise in Digital Communication Systems," IEEE Trans. Commun. Tech., vol. COM-19, April 1971, pp. 113-119.

[10] V. K. Prabhu, "Error Probability Performance of M-ary CPSK Systems with Intersymbol Interference," IEEE Trans. Commun., vol. COM-21, February 1973, pp. 97-109.

[11] I. Korn., "Bounds to Probability of Error in Binary Communication Systems with ISI and Dependent of Independent Symbols," IEEE Trans. Commun., vol. COM-22, February 1974, pp. 251-255.

[12] O. Shimbo, R. Fang, and M. Celebiler, "Performance of M-ary PSK Systems in Gaussian Noise and Intersymbol Interference," IEEE Trans. Inform. Theory, vol. IT-19, January 1973, pp. 44-58.

[13] I. Korn, "OQPSK and MSK Systems with Bandlimiting Filters in Transmitter and Receiver and Various Detector Filters," Proc. of the IEE, vol. 127, Part F, December 1980, pp. 439-447.

[14] L. D. Davisson and L. B. Milstein, "On the Performance of Digital Communication Systems with Bandpass Limiters - Part I and Part II," IEEE Trans. Commun., vol. COM-20, October 1972, pp. 972-978.

[15] R. G. Lyons, "The Effect of a Bandpass Nonlinearity on Signal Detectability," IEEE Trans. Commun., vol. COM-21, January 1973, pp. 51-69

[16] P. C. Jain and N. M. Blachman, "Detection of a PSK Signal Transmitted Through a Hard-Limited Channel," IEEE Trans. Inform. Theory, vol. IT-19, September 1973, pp. 623-630.

[17] P. Hetrakul and D. P. Taylor, "The Effects of Transponder Nonlinearity on Binary CPSK Signal Transmission," IEEE Trans. Commun., vol. COM-24, May 1976, pp. 546-553.

[18] R. J. Forsey, V. E. Gooding, P. J. McLane, and L. L. Campbell, "M-ary PSK Transmission via a Coherent Two-Link Channel Exhibiting AM-AM and AM-PM Nonlinearities," in Proc. Int. Conf. Commun., ICC'77, Chicago, Illinois, June 12-15, 1977, pp. 16.2-335 to 16.2-339.

[19] N. A. Mathews and A. H. Aghvami, "M-ary CPSK Signaling Over Nonlinear Channels with Additive Gaussian Noise," Proc. of the IEE, vol. 127, Part F, October 1980, pp. 410-414.

[20] K. Yao and L. B. Milstein, "The Use of Output Moments to Predict Performance of Nonlinear Systems with Gaussian Inputs," Proc. of the International Communications Conference, Denver, Colorado, June 1981, pp. 33.2-1 to 33.2-4.

[21] I. Oka, S. Kabasawa, N. Moringaga, and T. Namekawa, "Interference Immunity Effects in CPSK Systems with Hard-Limiting Transponders," IEEE Trans. on Aerospace and Electronic Systems, vol. AES-17, January 1981, pp. 93-99.

[22] O. Shimbo, "Effects of Intermodulation, AM-PM Conversion, and Additive Noise in Multicarrier TWT Systems," Proc. of the IEEE, vol. 59, February 1971, pp. 230-238.

[23] D. Divsalar and M. K. Simon, "Performance of Quadrature Overlapped Raised-Cosine Modulation Over Nonlinear Satellite Channels," Proc. of the International Communications Conference, Denver, Colorado, June 1981, pp. 2.3.1-2.3.7.

[24] N. A. Mathews and A. H. Aghvame, "Binary and Quarternary CPSK Transmissions Through Nonlinear Channels in Additive Gaussian Noise and Cochannel Interference," Proc. of the IEE, vol. 128, Part F, April 1981, pp. 96-103.

[25] M. E. Jones and M. R. Wachs, "Measured 60 Mbps 4-Phase PSK Signal Impairments Through Earth Station HPA and Satellite Transponder," Proc. of the National Telecomm. Conference, Dallas, Texas, November 1976, pp. 21.2-1 to 21.2-5.

[26] A. Weinberg, "The Effects of Transponder Imperfections on the Error Probability Performance of a Satellite Communication System," IEEE Trans. on Commun., vol. COM-28, June 1980, pp. 858-872.

[27] N. Ekanayake and D. P. Taylor, "CPSK Signaling Over Hard-Limited Channels in Additive Gaussian Noise and Intersymbol Interference," IEEE Trans. Inform. Theory, vol. IT-25, January 1979, pp. 62-69.

[28] N. Ekanayake and D. P. Taylor, "Intersymbol Interference Bounds for Nonlinear Satellite Channels," Electronics Letters, vol. 13, no. 17, August 1977, pp. 498-500.

[29] N. Ekanayake and D. P. Taylor, "Binary CPSK Performance Analysis for Saturating Band-Limited Channels," IEEE Trans. Comm., vol. COM-27, March 1979, pp. 596-601.

[30] S. Benedetto, E. Biglieri and R. Daffara, "Performance Prediction for Digital Satellite Links - a Volterra Series Approach," Fourth International Conference on Digital Satellite Communications, Montreal, Canada, October 1978.

[31] M. C. Jeruchim, "Some Modeling Aspects in the Simulation of Digital Links, "Proc. of the International Telemetering Conf., Los Angeles, California, 1978, pp. 603-609.

[32] D. A. Lombard and D. R. Duponteil, "PSK Transmission Over a Nonlinear Satellite Channel," 1974 International Conference on Communications, Conference Record, Paper 36D, Minneapolis, Minnesota, June 1974.

[33] L. Lundquist, et al., "Transmission of 4-PSK TDMA Over Satellite Channels," IEEE Trans. Commun., vol. COM-22, September 1974, pp. 1354-1360.

[34] H. B. Poza, H. L. Berger, and D. M. Bernstein, "A Wideband Data Link Computer Simulation Model," Comput. & Elect. Engineering, Pergamon Press, Ltd., vol. 5, 1978, pp. 135-149.

[35] W. H. Tranter, R. E. Ziemer, and M. Fashano, "Performance Evaluation Using SYSTID Time Domain Simulation," 1975 International Conference on Communications, Conference Record, Paper 20A, San Francisco, California, June 1975.

[36] P. S. Angelo, M. C. Austin, M. Fashano, and D. F. Horwood, "MSK and Offset Keyed QPSK Through Band Limited Channels," Fourth International Conference on Digital Satellite Communications, Montreal, Canada, October 1978.

[37] E. C. Posner, "The Application of Extreme Value Theory to Error-Free Communications," Technometrics, vol. 3, November 1965.

[38] S. B. Weinstein, "Theory and Application of Some Classical and Generalized Asymptotic Distributions of Extreme Values," IEEE Trans. on Info. Theory, vol. IT-19, March 1973, pp. 148-154.

[39] M. D. Jeruchim, "On the Estimation of Error Probability Using Generalized Extreme Value Theory," IEEE Trans. on Info. Theory, vol. IT-22, January 1976, pp. 108-110.

[40] S. B. Weinstein, "Estimating Small Probabilities by Linearing the Tail of a PDF," IEEE Trans. on Commun. Tech., vol. 19, December 1971, pp. 1149-1156.

[41] M. C. Jeruchim, "On the Characterization of Noise in the Simulation of Nonlinear Wideband Satellite Digital Links," Proc. International Telemetering Conference, San Diego, California, October 1980.

[42] K. Sam Shanmugam and P. Balaban, "Estimation of Error Probabilities in Digital Communication Systems," Proc. of the National Telecomm. Conference, Washington, D. C., October 1979, pp. 35.5-1 to 35.5-6.

[43] L. J. Richter, "Bit Error Estimation of SYSTID Models Using Importance Sampling," Hughes Aircraft Co., Interdepartmental Correspondence, Org. 40-91, September 1980.

[44] M. L. Steinberger, P. Balaban, and D. Sam Shanmugam, "On the Effects of Uplink Noise in a Non-Linear Satellite Channel," Proc. of the International Commun. Conference, Denver, Colorado, June 1981, pp. 20-1 to 20-7.

[45] K. Sam Shanmugam and P. Balaban, "On a Modified Monte-Carlo Simulation Technique for Estimating Error Rates in Digital Communications Systems," IEEE Trans. on Commun., vol. 28, November 1980, pp. 1916-1921.

[46] R. F. Mitchell, "Importance Sampling Applied to Simulation of False Alarm Statistics," IEEE Trans. on Aerospace and Elect. Sys., vol. AES-17, January 1981, pp. 15-24.

[47] M. F. Mesina, et al., "Optimal Receiver Filters for BPSK Transmission Over a Bandlimited Nonlinear Channel," IEEE Trans. on Commun., vol. COM-26, January 1978, pp. 12-22.

[48] D. Chakraborti and T. Noguchi, "Effects of Bandlimiting in Nonlinear Digital Satellite Links," Proc. International Commun. Conf., Seattle, WA, June 1980, pp. 62.3.1-62.3.7.

[49] J. M. Wozencraft and I. M. Jacobs, Principles of Communications Engineering, Wiley, New York, 1965.

This page is intentionally blank.

END

FILMED

1-85

DTIC