(12)

AD A138783

OFFICE OF NAVAL RESEARCH

Contract N00014-76-C-0408

Project NR 092-555

Technical Report No. 32

MICROMECHANICS OF FRACTURE IN ELASTOMERS

by

A. N. Gent and C. T. R. Pulford

Institute of Polymer Science
The University of Akron
Akron, Ohio 44325

DTIC
MAR 0 9 1984
E

February, 1984

Reproduction in whole or in part is permitted
for any purpose of the United States Government
Approved for Public Release; Distribution Unrestricted

DTIC FILE COPY

84 03 0[illegible] 006

SECURITY CLASSIFICATION OF THIS PAGE (When Data Entered)

REPORT DOCUMENTATION PAGE

READ INSTRUCTIONS BEFORE COMPLETING FORM

1. REPORT NUMBER: Technical Report 32

2. GOVT. ACCESSION NO.: AD-A138783

3. RECIPIENT'S CATALOG NUMBER:

4. TITLE (and Subtitle): Micromechanics of Fracture in Elastomers

5. TYPE OF REPORT & PERIOD COVERED: Technical Report

6. PERFORMING ORG. REPORT NUMBER:

7. AUTHOR(s): A. N. Gent and C. T. R. Pulford

8. CONTRACT OR GRANT NUMBER(s): N00014-76-C-0408

9. PERFORMING ORGANIZATION NAME AND ADDRESS:
Institute of Polymer Science
The University of Akron
Akron, Ohio 44325

10. PROGRAM ELEMENT, PROJECT, TASK AREA & WORK UNIT NUMBERS: NR 092-555

11. CONTROLLING OFFICE NAME AND ADDRESS:
Office of Naval Research
Power Program
Arlington, VA 22217

12. REPORT DATE: February, 1984

13. NUMBER OF PAGES: 30

14. MONITORING AGENCY NAME & ADDRESS (if different from Controlling Office):

15. SECURITY CLASS. (of this report): Unclassified

15a. DECLASSIFICATION/DOWNGRADING SCHEDULE:

16. DISTRIBUTION STATEMENT (of this Report)
According to attached distribution list.
Approved for public release; distribution unrestricted

17. DISTRIBUTION STATEMENT (of the abstract entered in Block 20, if different from Report)

18. SUPPLEMENTARY NOTES
submitted to
Journal of Materials Science

19. KEY WORDS (Continue on reverse side if necessary and identify by block number)
carbon-black fillers, crack tips, elastomers, fracture, micromechanics of fracture, polybutadiene, stress-raising features, tear, tear nucleation, tear plane, tear tip

20. ABSTRACT (Continue on reverse side if necessary and identify by block number)

A study of torn surfaces and of the tips of propagating tears in elastomers has been carried out using scanning electron microscopy. Vertical steps separating smooth featureless torn regions are characteristic features of the torn surfaces. They are found to be more frequent and larger in stronger elastomers. They are attributed to the intersection of secondary cracks at the tear tip, displaced somewhat from the general tear plane, and nucleated by inherent stress-raisers. The effective diameter of the tear tip is thereby increased. Stress-raising features are inferred to be present in

DD FORM 1 JAN 73 1473 EDITION OF 1 NOV 65 IS OBSOLETE
S/N 0102-LF-014-6601

SECURITY CLASSIFICATION OF THIS PAGE (When Data Entered)

elastomeric materials at a typical spacing of 10-100 μm. In carbon-black-filled elastomers, the carbon particles themselves are found to nucleate secondary cracks profusely.

Accession For	
NTIS CRA&I	X
DTIC TAB	☐
Unannounced	☐
Justification	
By	
Distribution/	
Availability Codes	
Dist	Avail and/or Special
A-1	

DTIC COPY INSPECTED 2

SUMMARY

A study of torn surfaces and of the tips of propagating tears in elastomers has been carried out using scanning electron microscopy. Vertical steps separating smooth featureless torn regions are characteristic features of the torn surfaces. They are found to be more frequent and larger in stronger elastomers. They are attributed to the intersection of secondary cracks at the tear tip, displaced somewhat from the general tear plane, and nucleated by inherent stress-raisers. The effective diameter of the tear tip is thereby increased. Stress-raising features are inferred to be present in elastomeric materials at a typical spacing of 10-100 μm. In carbon-black-filled elastomers, the carbon particles themselves are found to nucleate secondary cracks profusely.

INTRODUCTION

Much can be learned about mechanisms of failure by a study of fracture surfaces. However, the torn surfaces of elastomers have received little attention up to the present time. Thomas has pointed out on theoretical grounds that the tear strength will be directly related to the bluntness of the tear tip, measured by the radius of curvature of an idealized tear tip in the unstrained state (1). A rough torn surface is then indicative of a blunt tear and a smooth torn surface is indicative of a sharp tear. Indeed, a general correlation is found to hold between the measured tear strength and the observed roughness of the torn

surface, on a scale of 0.1 to 1 mm (2, 3). Roughness on a still larger scale has been observed under certain conditions of tearing in rubber reinforced with carbon black, the tear curving away from the original plane of propagation to such a degree that it stops altogether and a new tear tip must form (2, 3). This discontinuous, so called "knotty", tearing leaves relatively smooth torn surfaces between the "knots". The tear force also oscillates between high values at the arrest points and low values in the smoothly-propagating regions.

A minimum or threshold strength of elastomers is observed at high temperatures and low rates of tearing, when the torn surfaces are relatively smooth (4-6). Moreover, this threshold strength, of the order of 50 J/m^2, is in reasonably good accord with a simple molecular theory in which the tear tip diameter is given its minimum possible size, about 10 nm, corresponding to the distance between the ends of macromolecular strands in the molecular network comprising the crosslinked elastomer (7).

Thus, there is substantial evidence for a general relationship between the tear strength of rubber and the roughness of the torn surface. In contrast to this viewpoint however, Fukahori and Andrews have recently suggested that an <u>inverse</u> correlation holds (8). They propose that both properties are related to the mechanical hysteresis of the material, the tear strength by a direct relationship, as is widely-accepted (9-11), and the surface roughness by an inverse relationship. They attribute surface roughness to the formation of secondary cracks ahead of

the main tear front, as proposed by Smekal (12) and suggest that the size of the zone in which secondary cracking takes place is a decreasing function of the degree of mechanical hysteresis.

Small-scale surface irregularities of some complexity are found on the fracture surfaces of torn elastomers (13-15). There is clearly a need for a detailed study of these features of the tear process, and of the relationship between surface roughness and the observed strength. Fracture surfaces of some representative elastomers torn under various conditions have therefore been examined by scanning electron microscopy. In addition, the tip of a propagating tear has been studied using a technique devised by Bascom (13). These observations are described here and accounted for by means of a simple micromechanical model of local tear processes.

EXPERIMENTAL

Sheets of rubber, about 1.5 mm thick, were made using the mix formulations and vulcanization conditions given in the Appendix. Sample strips, about 7.5 mm wide and 25 mm long, were cut from the sheets. Each strip was cut about half-way through along a center line by scoring it with a sharp blade. It was then bent back with the cut surface outwards so that tearing took place at the tip of the cut at a rate governed by the bending stresses developed there, Figure 1. Somewhat similar rates of tearing, between 0.5 and 2 mm/s, were employed with elastomers

of widely differing tear strength by varying the degree of bending. The torn surfaces were then gold-coated in a vacuum evaporator and examined by scanning electron microscopy.

An alternative procedure, described by Bascom (13), was employed to study the tear tip itself. In this case the scored strip was bent back over a metal plate and tied in the bent state with wire. As the tear propagated from the initial cut it ran into regions of lower stress and eventually stopped. The sample was gold-coated at this point and examined in the bent state.

Some samples were swollen with paraffin oil and torn in the swollen state. The paraffin oil was then extracted from the sample with acetone before microscopy.

NATURE OF THE TEAR PROCESS

All unfilled elastomers appeared to tear in the same way. This process is illustrated here in the simplest case, a non-crystallizing mixed-isomer polybutadiene (Diene 35 NFA, Firestone Tire and Rubber Company) crosslinked with a free-radical source, dicumyl peroxide (formulation A in the Appendix).

The tear tip is shown in Figure 2. Characteristic webs, or strands, of rubber are seen to stretch across the tear tip (vertically in Figure 2). When rubber is torn, such webs or strands can often be seen with a low-power microscope or even with the unaided eye; they are apparently a common feature of the tear process. They have been attributed to cavitation taking place ahead of the tear tip, creating strands of rubber between

the cavities or vacuoles (16). However, detailed inspection of the tear tip reveals that the rubber strands are not isolated from the underlying material; instead, they constitute the edges of vertically-disposed subsidiary tears that can be traced right across the main tear tip into the torn surfaces on either side. These edges or webs of rubber relax as the main tear passes on, to form matching cross-hatched patterns on both of the torn surfaces, Figure 2. The patterns reveal that the vertical tears have propagated for considerable distances at an angle of about 45° (in the unstrained state) to the direction of advance of the main tear.

On either side of a vertical tear the main tear plane was found to be displaced vertically by 2-10 μm, causing a step in an otherwise remarkably featureless fracture surface, Figure 3. The shape of the steps is shown schematically in Figure 4. Each step is associated with one of the webs observed crossing the fracture plane in the stretched state. At intervals a new step is formed, splitting the main tear plane again into two different levels, displaced vertically.

Frequent irregularities can be seen on each propagating step in Figure 3. They appear to be momentary arrest points where a new step or web was about to form. Indeed, the average distance between these irregular features along a step was found to be approximately the same as the average distance $\underline{d}$ between steps, measured in a direction normal to the steps themselves, suggesting that the same factors govern both phenomena. Both probably arise from some local perturbation of stress or strength.

Tearing processes in other elastomers were found to be basically similar to those observed in polybutadiene. Their fracture surfaces were more complicated, however, showing a more pronounced deviation of the vertical steps from a linear path and much greater step heights, Figure 5. Nevertheless, a number of different elastomeric materials; polybutadiene, cross-linked with either dicumyl peroxide or sulfur formulations, and a styrene-butadiene copolymer (SBR) and an ethylene-propylene-diene terpolymer (EPDM), crosslinked with sulfur formulations; all gave fracture surfaces having a characteristic step spacing $\underline{d}$ of about 25 μm and a propagation angle $\underline{\theta}$ of 25-45° with respect to the direction of propagation of the tear front.

This mode of fracture appears to be characteristic of rubber. Yet it is unexpectedly complex, and raises several questions. Why does secondary tearing occur at all? One might expect the main tear to advance smoothly, without forming edges or webs at right angles to the main tear plane. And why is the main tear plane displaced vertically, by about 5 μm in Figure 3, on either side of a secondary tear? Why do secondary tears propagate at an angle of about ±45° to the direction of advance of the main tear, creating typical diamond patterns on the torn surfaces, Figure 2? What factors govern the separation of secondary tears and hence the scale of the diamond pattern?

In an attempt to answer these questions a further series of observations were made. They are described in the remainder of the paper, together with some proposed micromechanical factors which account for the main effects.

RELATION BETWEEN TEAR STRENGTH AND MORPHOLOGICAL FEATURES OF THE FRACTURE SURFACE

The strength of polybutadiene materials was altered in three ways: by increasing the degree of crosslinking, by raising the test temperature, and by swelling the elastomer with light paraffin oil. Each of these changes is known to reduce the resistance to tearing.

Measured values of the step spacing $\underline{d}$ and step angle $\underline{\theta}$ are given in Table 1. They show clearly that the steps are more widely spaced in weaker materials, and propagate at a somewhat greater angle to the tear direction. Thus, an inverse correlation appears to hold between the resistance to tearing of an elastomeric material and the distance apart of steps on the fracture surface. Stronger materials show more closely-spaced steps whereas weaker materials show smooth torn areas, extending over large distances, with no distinct features greater than about 0.1 μm in size.

However, this general correlation does not appear to apply to strain-crystallizing elastomers, such as natural rubber, which are much more resistant to tearing than the wholly-amorphous elastomers considered so far. The step spacing for a natural rubber vulcanizate was found to be quite comparable in size to that for amorphous materials, ranging from 10 to 100 μm, even though its tear resistance is much greater.

Another feature shown by tear-resistant materials is a greater <u>height</u> of the steps on fracture surfaces, so that the

tear plane propagates on levels separated by considerable distances. Clearly, a propagating tear tip is rendered effectively less sharp both by closely-spaced steps and by larger step heights. Both features appear to be present in stronger elastomers and cause an effective blunting of the tear tip on a microscopic scale. We now consider how the micro-mechanics of tearing leads to these morphological features.

PROPOSED MECHANISM FOR STEP AND WEB FORMATION

Uniform advance of a smooth tear along a broad front is intrinsically unlikely. Instead, small secondary cracks will develop at the tear tip, at points where the local stress is unusually high. If the material is highly-stretched at the tear tip, these secondary cracks will not be co-linear, in general, but will be separated somewhat in the vertical (strain) direction, Figure 6a. Then, as they grow in size, they will eventually link up by the deviation of one or both of them, as shown schematically in Figure 6b under the influence of the complex stress field set up where they come into proximity.

This hypothesis accounts successfully for the formation of steps of the characteristic shape observed on fracture surfaces, shown schematically at point E in Figure 6b, and also for the appearance of webs in the stretched state, as sketched in Figure 6c. It also suggests that steps will be more numerous when there is a greater density of stress-raising features within the elastomer and that the average step height will be greater

when the fracture stress set up at the crack tip is more diffuse. A more diffuse stress distribution would be expected in highly-elastic materials and also, one notes, in materials which have already undergone some secondary cracking. Thus, the process of step formation will be to some extent autocatalytic. This feature was noted in tearing experiments with weak elastomers: when a step formed at the tear tip it appeared to cause others to form and grow, in a cascade fashion, as the tear advanced.

It is also noteworthy that the average distance between steps in a fully-developed tear surface, in the range 10-100 μm, is similar in magnitude to the inferred size of natural flaws or defects in elastomers, from which tensile or mechanical fatigue failures originate (17). If stress-concentrating features are commonly present in elastomers at a general spacing of 10-100 μm, then cracks or defects of this size would also be expected.

Although the considerations put forward above appear to account successfully for the formation of characteristic steps on the torn surfaces of elastomers, they do not explain their propagation for long distances at an angle to the main direction of tear advance. However, substantial stresses act across the tear plane because material at the tear tip is subjected to a pure shear deformation rather than to simple extension. Also, the resistance to tearing apart by stresses acting across the tear plane is much reduced for materials that are highly stretched by the principal tearing stress (18). Thus, there will be a

tendency for vertical tears to propagate readily. Their direction will be influenced by the anisotropy of the stress field where two cracks meet, as shown in Figure 6b, but a detailed stress analysis seems necessary to account for the observed angles.

TEAR OF CARBON-BLACK-FILLED ELASTOMERS

Elastomers are commonly reinforced by the incorporation of large amounts of finely-divided particulate fillers, notably carbon black. The mechanism of reinforcement is still obscure, however. A photograph of the tear tip in a carbon-black-filled polybutadiene vulcanizate (Formulation C in the Appendix) is shown in Figure 7. Many solid particles, about ½ μm in diameter, are visible at the tear tip and in the torn surfaces. Although white in this photograph they are assumed to be carbon black particles (aggregates of individual particles) for several reasons: they are of the reported size for this particular type of carbon black (N330); when a different formulation was studied containing a carbon black of larger particle size (N765), then the particles observed on the torn surface were correspondingly larger, about 1 μm in diameter; and when a smaller amount of carbon black was incorporated into the elastomer, the number of particles visible on the fracture surface was correspondingly reduced.

The tear tip is seen to be split by numerous vertical tears. Careful inspection shows that each tear is associated with a carbon black particle. Thus, each particle appears to have acted as a local stress-raiser and provided a potential nucleus for

a secondary crack. The reinforcing action of carbon black thus appears to consist, paradoxically, of inducing many small tears to form in the highly-strained material at the tear tip, and in this way to blunt the effective tip diameter (19).

The particle size is extremely important for this reinforcement mechanism to operate. If the particles are much smaller than 1 μm, say, then detachment or tearing in their vicinity becomes improbable because the stresses required become extremely large (20, 21). On the other hand, when the particles are much larger than about 1 μm, then they do not confer significant advantages because unfilled elastomers appear to have inherent stress-raising defects at spacings of 10-100 μm, as discussed earlier.

The characteristic marked deviation of a tear in reinforced elastomers from a linear path under some circumstances, so that the effective tip diameter becomes several mm and a new tear must form ("knotty", or "stick-slip" tearing) is not accounted for by the micromechanical considerations discussed above. They apply to relatively smooth tearing of filled materials, for example, when the tear progresses for relatively short distances, or when tearing takes place at high speeds or at high temperatures, and the filled material is some three times more tear resistant than the corresponding unfilled materials (3, 22). Knotty tearing when the tear resistance becomes as much as ten times greater, is still unexplained.

CONCLUSIONS

There seems to be a natural tendency for tears in rubber to deviate from a straight path. Complicated fracture surfaces are formed with pronounced splitting in a direction perpendicular to the main tear plane. The splitting is more frequent in stronger materials and runs for longer distances so that the effective diameter of the tear tip is greatly enlarged in comparison with a single sharp tear. A tentative mechanism to account for this splitting, and for the characteristic steps that it gives rise to on torn surfaces, has been proposed in terms of a natural distribution of local stress-raising features at a spacing of the order of 10-100 μm. The nature of these stress-concentrating features is unknown. However, the enormously increased density of splitting in carbon-black-filled rubber is attributed to nucleation by carbon black particles of similar secondary cracks.

The proposed mechanism of vertical splitting of the main tear as a result of the joining up of secondary tears within the main tear front, Figure 6, must be clearly distinguished from that discussed by Fukahori and Andrews (8), following Smekal (12). They consider the main tear to link up with secondary cracks located <u>ahead</u> of it. No evidence was found for this process in the torn surfaces studied here.

REFERENCES

1. A. G. Thomas, J. Polymer Sci. 18, 177-188 (1955).

2. H. W. Greensmith, J. Polymer Sci. 21, 175-187 (1956).

3. H. W. Greensmith, J. Appl. Polymer Sci. 3, 183-193 (1960).

4. H. K. Mueller and W. G. Knauss, Trans. Soc. Rheol. 15, 217-233 (1971).

5. A. Ahagon and A. N. Gent, J. Polymer Sci. Polymer Phys. Ed. 13, 1903-1911 (1975).

6. A. N. Gent and R. H. Tobias, J. Polymer Sci. Polymer Phys. Ed. 20, 2317-2327 (1982).

7. G. J. Lake and A. G. Thomas, Proc. Roy. Soc. London A300, 108-119 (1967).

8. Y. Fukahori and E. H. Andrews, J. Materials Sci. 13, 777-785 (1978).

9. L. Mullins, Trans. Inst. Rubber Ind. 35, 213-222 (1959).

10. H. W. Greensmith, L. Mullins and A. G. Thomas, in "The Chemistry and Physics of Rubberlike Substances", ed. by L. Bateman, Wiley, New York, 1963, Chap. 10, pp. 249-299.

11. E. H. Andrews, J. Materials Sci. 9, 887-894 (1974).

12. A. Smekal, Ergeb. d. Exact. Naturw. 15, 106-188 (1936).

13. W. D. Bascom, Rubber Chem. Technol. 50, 875-883 (1977).

14. A. K. Bhowmick, G. B. Nando, S. Basu and S. K. De, Rubber Chem. Technol. 53, 327-334 (1980).

15. D. K. Setua and S. K. De, J. Materials Sci. 18, 847-852 (1983).

16. H. H. Kausch, "Polymer Fracture", Springer-Verlag, New York, 1978, p. 237.

17. A. N. Gent, P. B. Lindley and A. G. Thomas, J. Appl. Polymer Sci. 8, 455-466 (1964).

18. A. N. Gent and H. J. Kim, Rubber Chem. Technol. 51, 35-44 (1978).

19. A. E. Oberth and R. S. Bruenner, Trans. Soc. Rheol. 9, 165-185 (1965).

20. A. N. Gent, J. Materials Sci. 15, 2884-2888 (1980).

21. A. N. Gent and Byoungkyeu Park, J. Materials Sci., in press.

22. A. N. Gent and A. W. Henry, Proc. Internatl. Rubber Conf. 1967, Maclaren and Sons, London, 1968, pp. 193-204.

APPENDIX

The following mix formulations in parts by weight and vulcanization conditions were employed for preparing test specimens.

A: Polybutadiene (Diene 35 NFA, Firestone Tire and Rubber Company), 100; dicumyl peroxide, 0.05. Heated for 120 min at 150°C.

B: Polybutadiene, 100; dicumyl peroxide, 0.2. Heated for 120 min at 150°C.

C: Polybutadiene, 100; N330 carbon black (Vulcan 3, Cabot Corporation), 50; zinc oxide, 3.5; stearic acid, 2.5; Philrich HA5, 5; phenyl-2-naphthylamine, 1; Santocure MOR, 0.6; sulfur, 2. Heated for 60 min at 150°C.

Table 1: Morphological Features of Torn Surfaces of Polybutadiene Materials, in Order of Decreasing Strength

Formulation	Temperature (°C)	d (μm)	θ (degrees)
A(0.05% dicumyl peroxide)	-20	15	25
	25	30	30
	90	50	35
B(0.2% dicumyl peroxide)	25	100	45
A, swollen with paraffin oil, 160 per cent by volume	25	240	40

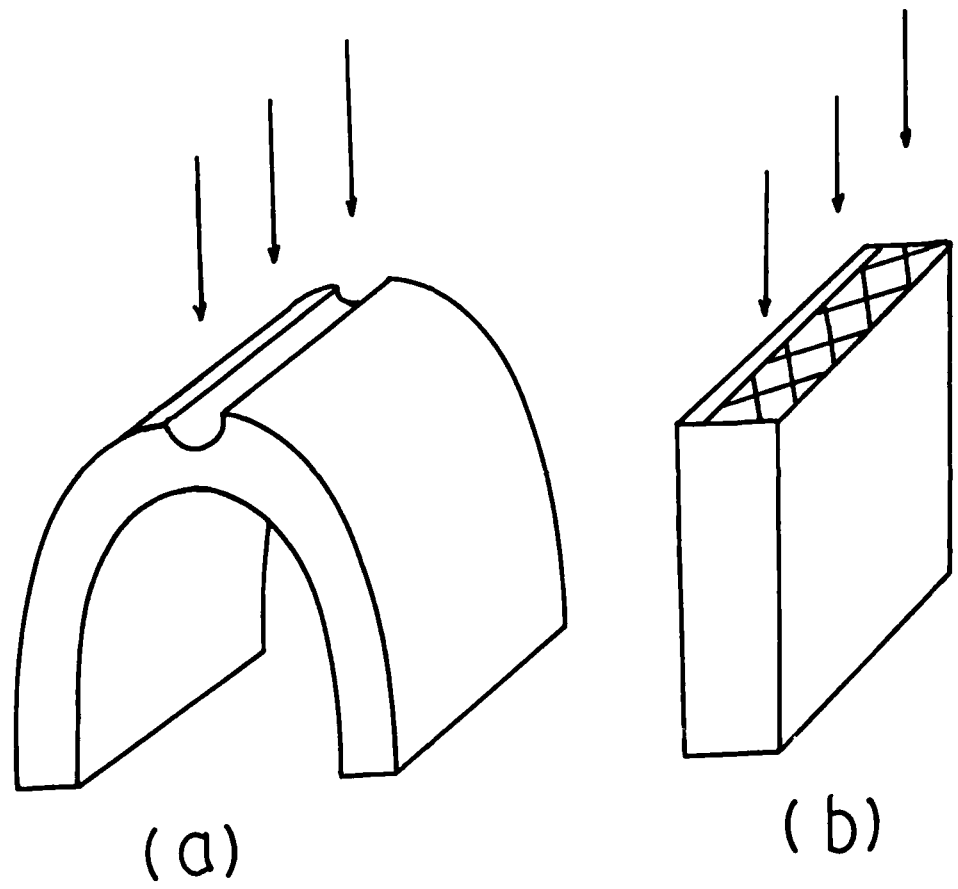

Figure 1. Testpieces employed for SEM studies
a: Tear tip; b: Torn surface

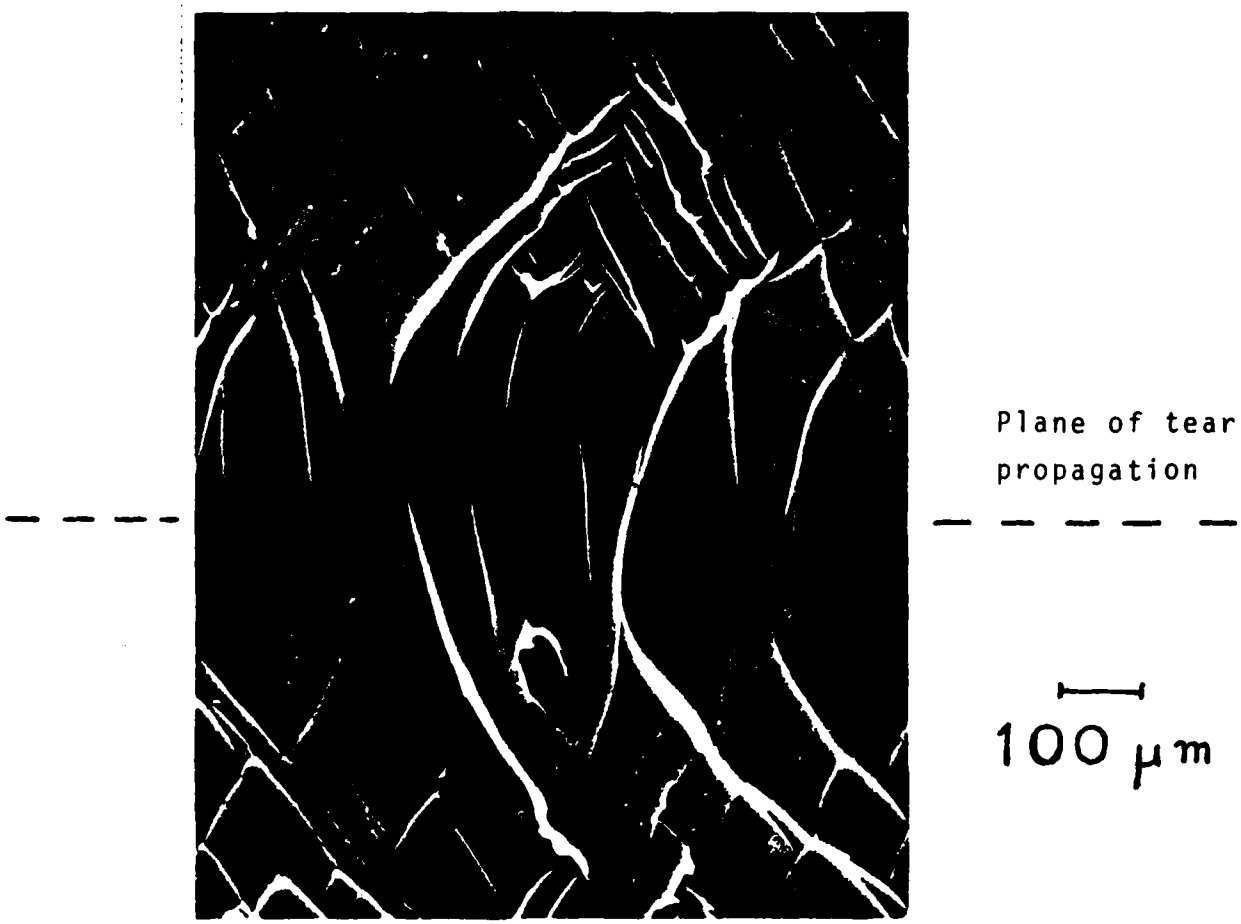

Figure 2. Tear tip of polybutadiene vulcanizate A.

Figure 3. Torn surface of polybutadiene vulcanizate A. Direction of tearing is shown by the arrow.

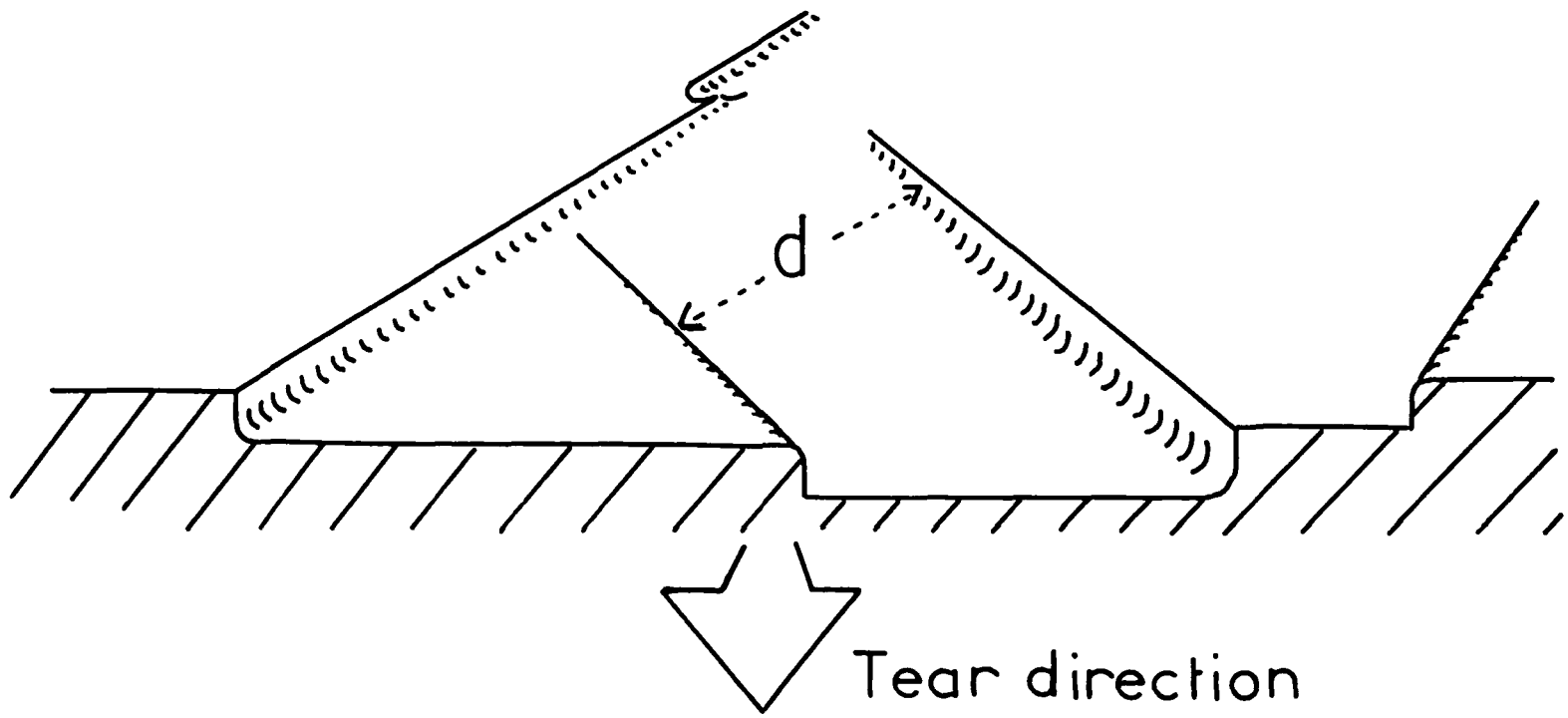

Figure 4. Steps on torn surface.

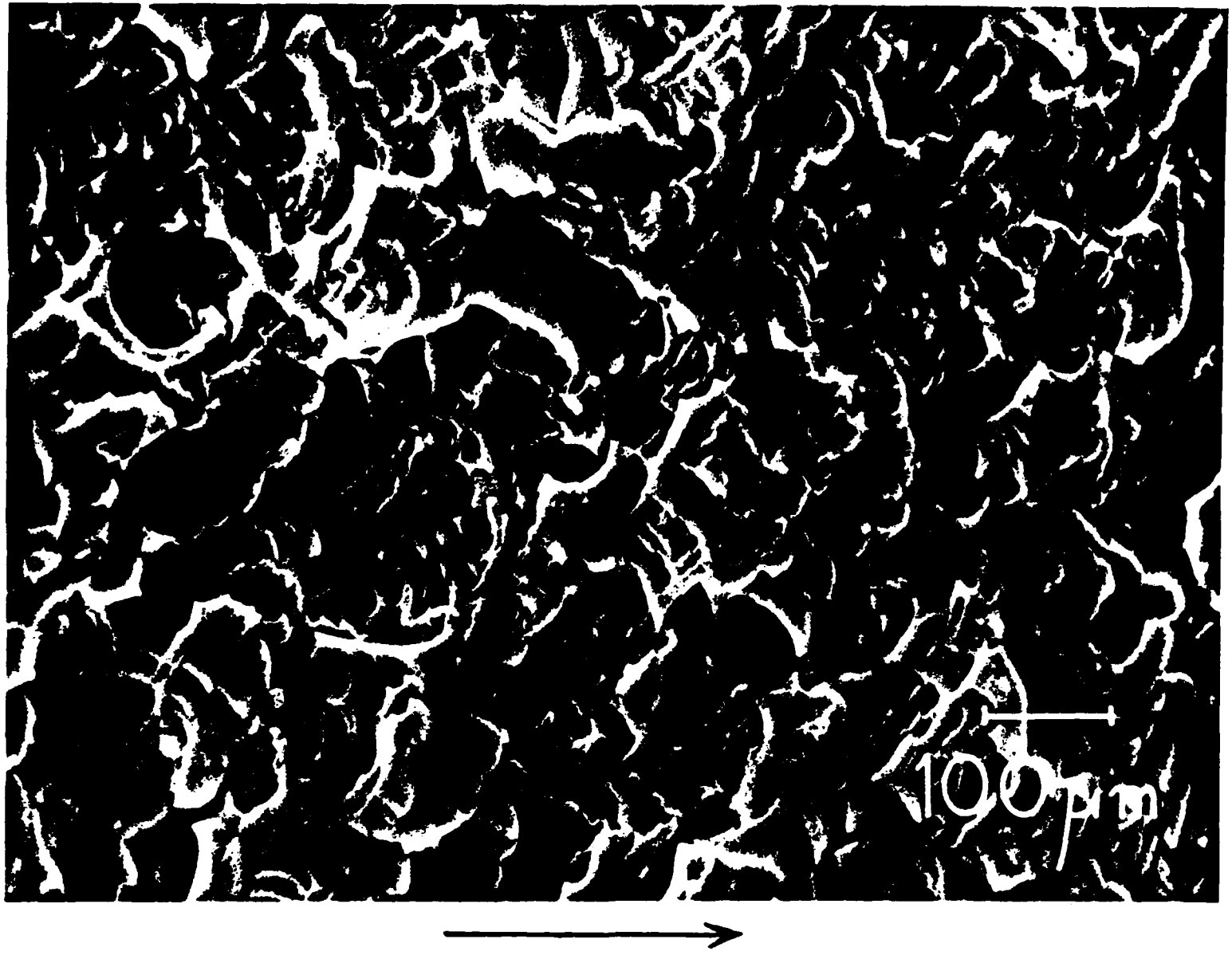

Figure 5. Torn surface of a sulfur-vulcanized polybutadiene material. Direction of tearing is shown by the arrow.

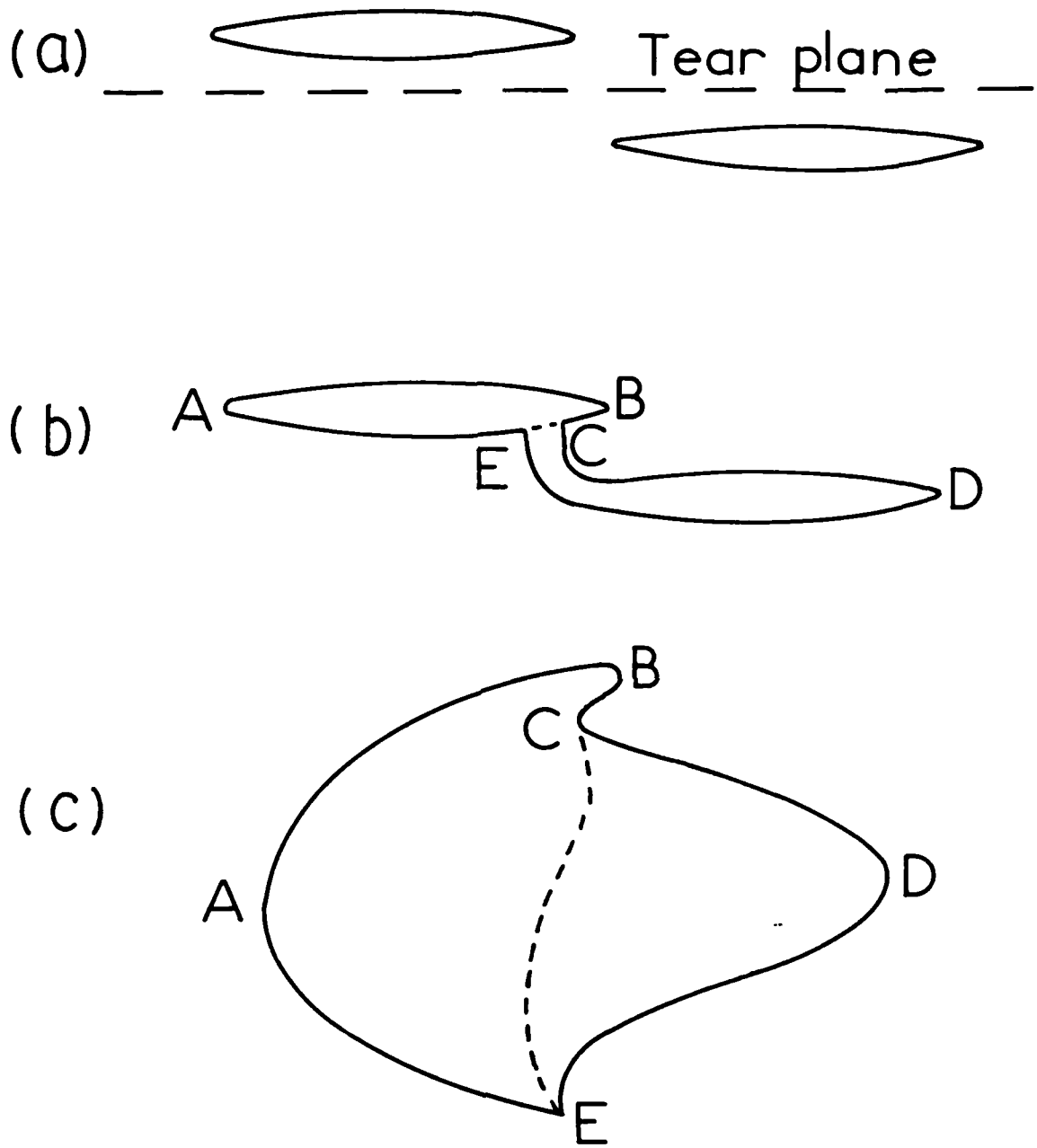

Figure 6. Proposed mechanism of step formation

a: Formation of secondary cracks at tear tip

b: Joining of secondary cracks

c: Sketch of joined cracks in the stretched state

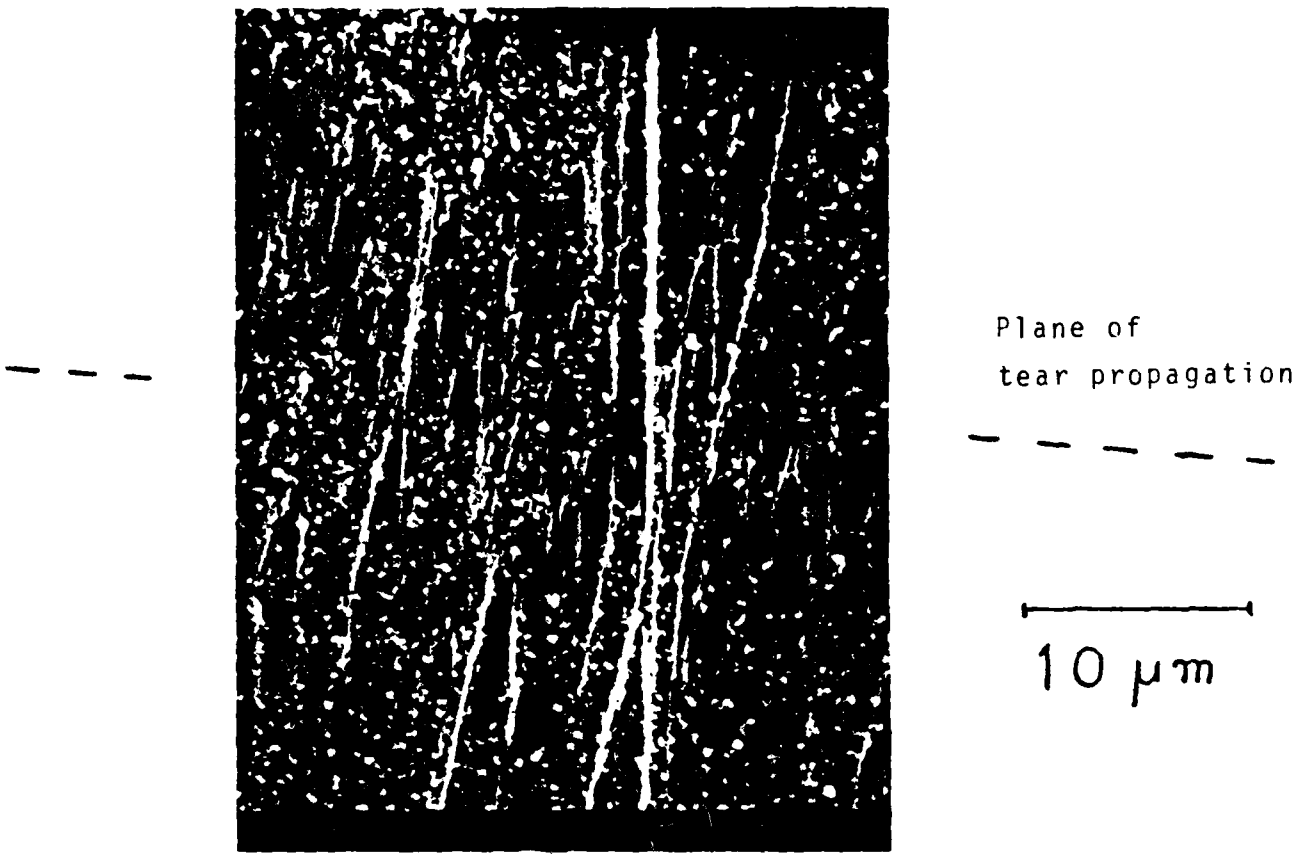

Figure 7. Tear tip of carbon-black-filled polybutadiene vulcanizate C.

DISTRIBUTION LIST

	No. Copies
Dr. L.V. Schmidt Assistant Secretary of the Navy (R,E, and S) Room 5E 731 Pentagon Washington, D.C. 20350	1
Dr. A.L. Slafkosky Scientific Advisor Commandant of the Marine Corps Code RD-1 Washington, D.C. 20380	1
Dr. Richard S. Miller Office of Naval Research Code 413 Arlington, VA 22217	10
Mr. David Siegel Office of Naval Research Code 250 Arlington, VA 22217	1
Dr. R.J. Marcus Office of Naval Research Western Office 1030 East Green Street Pasadena, CA 91106	1
Dr. Larry Peebles Office of Naval Research East Central Regional Office 666 Summer Street, Bldg. 114-D Boston, MA 02210	1
Dr. Phillip A. Miller Office of Naval Research San Francisco Area Office One Hallidie Plaza, Suite 601 San Francisco, CA 94102	1
Mr. Otto K. Heiney AFATL - DLDL Elgin AFB, FL 32542	1
Mr. R. Geisler ATTN: MKP/MS24 AFRPL Edwards AFB, CA 93523	1
Dr. F. Roberto Code AFRPL MKPA Edwards AFB, CA 93523	1
Dr. L.H. Caveny Air Force Office of Scientific Research Directorate of Aerospace Sciences Bolling Air Force Base Washington, D.C. 20332	1
Mr. Donald L. Ball Air Force Office of Scientific Research Directorate of Chemical Sciences Bolling Air Force Base Washington, D.C. 20332	1
Dr. John S. Wilkes, Jr. FJSRL/NC USAF Academy, CO 80840	1
Dr. R.L. Lou Aerojet Strategic Propulsion Co. P.O. Box 15699C Sacramento, CA 95813	1
Dr. V.J. Keenan Anal-Syn Lab Inc. P.O. Box 547 Paoli, PA 19301	1
Dr. Philip Howe Army Ballistic Research Labs ARRADCOM Code DRDAR-BLT Aberdeen Proving Ground, MD 21005	1
Mr. L.A. Watermeier Army Ballistic Research Labs ARRADCOM Code DRDAR-BLI Aberdeen Proving Ground, MD 21005	1
Dr. W.W. Wharton Attn: DRSMI-RKL Commander U.S. Army Missile Command Redstone Arsenal, AL 35898	1

DISTRIBUTION LIST

	No. Copies
Dr. R.G. Rhoades Commander Army Missile Command DRSMI-R Redstone Arsenal, AL 35898	1
Dr. W.D. Stephens Atlantic Research Corp. Pine Ridge Plant 7511 Wellington Rd. Gainesville, VA 22065	1
Dr. A.W. Barrows Ballistic Research Laboratory USA ARRADCOM DRDAR-BLP Aberdeen Proving Ground, MD 21005	1
Dr. C.M. Frey Chemical Systems Division P.O. Box 358 Sunnyvale, CA 94086	1
Professor F. Rodriguez Cornell University School of Chemical Engineering Olin Hall, Ithaca, N.Y. 14853	1
Defense Technical Information Center DTIC-DDA-2 Cameron Station Alexandria, VA 22314	12
Dr. Rocco C. Musso Hercules Aerospace Division Hercules Incorporated Alleghany Ballistic Lab P.O. Box 210 Washington, D.C. 21502	1
Dr. Ronald L. Simmons Hercules Inc. Eglin AFATL/DLDL Eglin AFB, FL 32542	1
Dr. E.H. Debutts Hercules Inc. Baccus Works P.O. Box 98 Magna, UT 84044	1
Dr. James H. Thacher Hercules Inc. Magna Baccus Works P.O. Box 98 Magna, UT 84044	1
Mr. Theordore M. Gilliland Johns Hopkins University APL Chemical Propulsion Info. Agency Johns Hopkins Road Laurel, MD 20810	1
Dr. R. McGuire Lawrence Livermore Laboratory University of California Code L-324 Livermore, CA 94550	1
Dr. Jack Linsk Lockheed Missiles & Space Co. P.O. Box 504 Code Org. 83-10, Bldg. 154 Sunnyvale, CA 94088	1
Dr. B.G. Craig Los Alamos National Lab P.O. Box 1663 NSP/DOD, MS-245 Los Alamos, NM 87545	1
Dr. R.L. Rabie WX-2, MS-952 Los Alamos National Lab. P.O. Box 1663 Los Alamos NM 87545	1
Dr. R. Rogers, WX-2 Los Alamos Scientific Lab. P.O. Box 1663 Los Alamos, NM 87545	1

DISTRIBUTION LIST

	No. Copies
Mr. R. Brown Naval Air Systems Command Code 330 Washington, D.C. 20361	1
Dr. H. Rosenwasser Naval Air Systems Command AIR-310C Washington, D.C. 20360	1
Mr. B. Sobers Naval Air Systems Command Code 03P25 Washington, D.C. 20360	1
Dr. L.R. Rothstein Assistant Director Naval Explosives Dev. Engineering Dept. Naval Weapons Station Yorktown, VA 23691	1
Dr. Lionel Dickinson Naval Explosive Ordnance Disposal Tech. Center Code D Indian Head, MD 20640	1
Mr. C.L. Adams Naval Ordnance Station Code PM4 Indian Head, MD 20640	1
Mr. S. Mitchell Naval Ordnance Station Code 5253 Indian Head, MD 20640	1
Dr. William Tolles Dean of Research Naval Postgraduate School Monterey, CA 93940	1
Naval Research Lab. Code 6100 Washington, D.C. 20375	1

	No. Copies
Dr. J. Schnur Naval Research Lab. Code 6510 Washington, D.C. 20375	1
Mr. R. Beauregard Naval Sea Systems Command SEA 64E Washington, D.C. 20362	1
Mr. G. Edwards Naval Sea Systems Command Code 62R3 Washington, D.C. 20362	1
Mr. John Boyle Materials Branch Naval Ship Engineering Center Philadelphia, PA 19112	1
Dr. H.G. Adolph Naval Surface Weapons Center Code R11 White Oak Silver Spring, MD 20910	1
Dr. T.D. Austin Naval Surface Weapons Center Code R16 Indian Head, MD 20640	1
Dr. T. Hall Code R-11 Naval Surface Weapons Center White Oak Laboratory Silver Spring, MD 20910	1
Mr. G.L. Mackenzie Naval Surface Weapons Center Code R101 Indian Head, MD 20640	1
Dr. K.F. Mueller Naval Surface Weapons Center Code R11 White Oak Silver Spring, MD 20910	1

DISTRIBUTION LIST

	No. Copies
Mr. J. Murrin Naval Sea Systems Command Code 62R2 Washington, D.C. 20362	1
Dr. D.J. Pastine Naval Surface Weapons Cneter Code R04 White Oak Silver Spring, MD 20910	1
Mr. L. Roslund Naval Surface Weapons Center Code R122 White Oak, Silver Spring MD 20910	1
Mr. M. Stosz Naval Surface Weapons Center Code R121 White Oak Silver Spring, MD 20910	1
Dr. E. Zimmet Naval Surface Weapons Center Code R13 White Oak Silver Spring, MD 20910	1
Dr. D. R. Derr Naval Weapons Center Code 388 China Lake, CA 93555	1
Mr. Lee N. Gilbert Naval Weapons Center Code 3205 China Lake, CA 93555	1
Dr. E. Martin Naval Weapons Center Code 3858 China Lake, CA 93555	1
Mr. R. McCarten Naval Weapons Center Code 3272 China Lake, CA 93555	1

	No. Copies
Dr. A. Nielsen Naval Weapons Center Code 385 China Lake, CA 93555	1
Dr. R. Reed, Jr. Naval Weapons Center Code 388 China Lake, CA 93555	1
Dr. L. Smith Naval Weapons Center Code 3205 China Lake, CA 93555	1
Dr. B. Douda Naval Weapons Support Center Code 5042 Crane, Indiana 47522	1
Dr. A. Faulstich Chief of Naval Technology MAT Code 0716 Washington, D.C. 20360	1
LCDR J. Walker Chief of Naval Material Office of Naval Technology MAT, Code 0712 Washington, D.C. 20360	1
Mr. Joe McCartney Naval Ocean Systems Center San Diego, CA 92152	1
Dr. S. Yamamoto Marine Sciences Division Naval Ocean Systems Center San Diego, CA 91232	1
Dr. G. Bosmajian Applied Chemistry Division Naval Ship Research & Development Center Annapolis, MD 21401	1
Dr. H. Shuey Rohn and Haas Company Huntsville, Alabama 35801	1

DISTRIBUTION LIST

	No. Copies
Dr. J.F. Kincaid Strategic Systems Project Office Department of the Navy Room 901 Washington, D.C. 20376	1
Strategic Systems Project Office Propulsion Unit Code SP2701 Department of the Navy Washington, D.C. 20376	1
Mr. E.L. Throckmorton Strategic Systems Project Office Department of the Navy Room 1043 Washington, D.C. 20376	1
Dr. D.A. Flanigan Thiokol Huntsville Division Huntsville, Alabama 35807	1
Mr. G.F. Mangum Thiokol Corporation Huntsville Division Huntsville, Alabama 35807	1
Mr. E.S. Sutton Thiokol Corporation Elkton Division P.O. Box 241 Elkton, MD 21921	1
Dr. G. Thompson Thiokol Wasatch Division MS 240 P.O. Box 524 Brigham City, UT 84302	1
Dr. T.F. Davidson Technical Director Thiokol Corporation Government Systems Group P.O. Box 9383 Ogden, Utah 84409	1
Dr. C.W. Vriesen Thiokol Elkton Division P.O. Box 241 Elkton, MD 21921	1
Dr. J.C. Hinshaw Thiokol Wasatch Division P.O. Box 524 Brigham City, Utah 84302	1
U.S. Army Research Office Chemical & Biological Sciences Division P.O. Box 12211 Research Triangle Park NC 27709	1
Dr. R.F. Walker USA ARRADCOM DRDAR-LCE Dover, NJ 07801	1
Dr. T. Sinden Munitions Directorate Propellants and Explosives Defence Equipment Staff British Embassy 3100 Massachusetts Ave. Washington, D.C. 20008	1
LTC B. Loving AFROL/LK Edwards AFB, CA 93523	1
Professor Alan N. Gent Institute of Polymer Science University of Akron Akron, OH 44325	1
Mr. J. M. Frankle Army Ballistic Research Labs ARRADCOM Code DRDAR-BLI Aberdeen Proving Ground, MD 21005	1

DISTRIBUTION LIST

	No. Copies
Dr. Ingo W. May Army Ballistic Research Labs ARRADCOM Code DRDAR-BLI Aberdeen Proving Ground, MD 21005	1
Professor N.W. Tschoegl California Institute of Tech Dept. of Chemical Engineering Pasadena, CA 91125	1
Professor M.D. Nicol University of California Dept. of Chemistry 405 Hilgard Avenue Los Angeles, CA 90024	1
Professor A. G. Evans University of California Berkeley, CA 94720	1
Professor T. Litovitz Catholic Univ. of America Physics Department 520 Michigan Ave., N.E. Washington, D.C. 20017	1
Professor W. G. Knauss Graduate Aeronautical Lab California Institute of Tech. Pasadena, CA 91125	1
Professor Edward Price Georgia Institute of Tech. School of Aerospace Engin. Atlanta, Georgia 30332	1
Dr. Kenneth O. Hartman Hercules Aerospace Division Hercules Incorporated P.O. Box 210 Cumberland, MD 21502	1
Dr. Thor L. Smith IBM Research Lab D42.282 San Jose, CA 95193	1
Dr. J. P. Marshall Dept. 52-35, Bldg. 204/2 Lockheed Missile & Space Co. 3251 Hanover Street Palo Alto, CA 94304	1
Ms. Joan L. Janney Los Alamos National Lab Mail Stop 920 Los Alamos, NM 87545	1
Dr. J. M. Walsh Los Alamos Scientific Lab Los Alamos, NM 87545	1
Professor R. W. Armstrong Univ. of Maryland Department of Mechanical Eng. College Park, MD 20742	1
Prof. Richard A. Reinhardt Naval Postgraduate School Physics & Chemistry Dept. Monterey, CA 93940	1
Dr. R. Bernecker Naval Surface Weapons Center Code R13 White Oak, Silver Spring, MD 20910	1
Dr. M. J. Kamlet Naval Surface Weapons Center Code R11 White Oak, Silver Spring, MD 20910	1
Professor J. D. Achenbach Northwestern University Dept. of Civil Engineering Evanston, IL 60201	1
Dr. N. L. Basdekas Office of Naval Research Mechanics Program, Code 432 Arlington, VA 22217	1
Professor Kenneth Kuo Pennsylvania State Univ. Dept. of Mechanical Engineering University Park, PA 16802	1

DISTRIBUTION LIST

	No. Copies
Dr. S. Sheffield Sandia Laboratories Division 2513 P.O. Box 5800 Albuquerque, NM 87185	1
Dr. M. Farber Space Sciences, Inc. 135 Maple Avenue Monrovia, CA 91016	1
Dr. Y. M. Gupta SRI International 333 Ravenswood AVenue Menlo Park, CA 94025	1
Mr. M. Hill SRI International 333 Ravenswood Avenue Menlo Park, CA 94025	1
Professor Richard A. Schapery Texas A&M Univ. Dept of Civil Engineering College Station, TX 77843	1
Dr. Stephen Swanson Univ. of Utah Dept. of Mech. & Industrial Engineering MEB 3008 Salt Lake City, UT 84112	1
Mr. J. D. Byrd Thiokol Corp. Huntsville Huntsville Div. Huntsville, AL 35807	1
Professor G. D. Duvall Washington State University Dept. of Physics Pullman, WA 99163	1
Prof. T. Dickinson Washington State University Dept. of Physics Pullman, WA 99163	1
ONR Resident Representative Ohio State University Res. Ctr. 1314 Kinnear Road Columbus, OH 43212	1