AD-A137 704 LINE VOLTAGE ANOMALIES AND OPTIMIZED SOLUTIONS(U) 1/1
LIGHTNING ELIMINATION ASSOCIATES SANTA FE SPRINGS CA
R B CARPENTER APR 83 LEA-83-1

UNCLASSIFIED F/G 10/2 NL

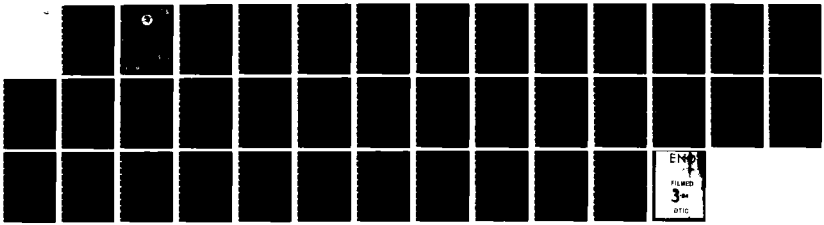

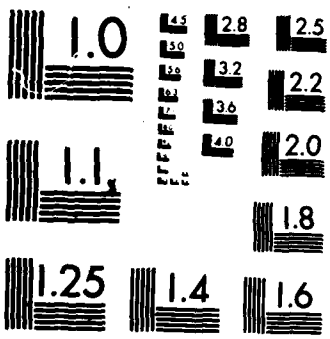

MICROCOPY RESOLUTION TEST CHART
NATIONAL BUREAU OF STANDARDS-1963-A

AD A137704

3

LINE VOLTAGE ANOMALIES

AND

OPTIMIZED SOLUTIONS

Roy B. Carpenter, Jr.

APRIL 1983

Report No. LEA-83-1

DTIC
ELECTE
FEB 7 1984
S D
D

DISTRIBUTION STATEMENT A
Approved for public release;
Distribution Unlimited

DTIC FILE COPY

LIGHTNING ELIMINATION ASSOCIATES

12516 LAKELAND ROAD, SANTA FE SPRINGS, CA 90670

84 02 07 002

TABLE OF CONTENTS

INTRODUCTION

Background
Scope and Objectives
Definition of Terms or Types of Anomalies

THE LINE VOLTAGE ANOMALY PROBLEM

The Destructive Phenomena
Man-Made Disturbances or Hazards
Disruptive Transients
Disruptive Power Anomalies
Over-Voltage and Under-Voltage Situations

THE POWER LINES PROTECTION REQUIREMENT

For Protection Against Potentially Destructive Anomalies
For Protection Against Potentially Disruptive Anomalies
For Protection Against Primary Power System Anomalies
The Relative Risk Factor

PROTECTION AGAINST DESTRUCTIVE ANOMALIES

Concepts and Considerations
The Parallel Protector Concept
The Series Hybrid Protector

PROTECTION AGAINST DISRUPTIVE ANOMALIES

Concepts and Considerations
The Hybrid Filter Concept

PROTECTION CONCEPTS FOR DISRUPTIVE VOLTAGE LEVELS

Concepts and Considerations
The Perfect Power Source

SUMMARY OF PROTECTION RECOMMENDATIONS

BIBLIOGRAPHY

Accession For
NTIS GRA&I ☒
DTIC TAB ☐
Unannounced ☐
Justification
By Per Ltr on file
Distribution/
Availability Codes
Dist | Avail and/or Special
A/1

LIST OF FIGURES

Figure 1, Line Voltage Anomalies, Page 3.

Figure 2, Sample Surge Voltage as a Function of Distance from Stroke to Line, Page 6.

Figure 3, Vertical Lightning, Cloud-to-Ground and
Figure 4, Horizontal Lightning, Cloud-to-Cloud, Page 8.

Figure 5, Atmospheric Transients and
Figure 6, Earth Current Transients, Page 9.

Figure 7, Some Earth Current Transients and
Figure 8, Electromagnetic Field Induced Transients, Page 11.

Figure 9, Combined Transient Recording Data (IEEE), Page 12.

Figure 10, The Parallel Protector and
Figure 11, The Series Hybrid Concept, Page 20.

Figure 12, The LEA Surge Eliminator Concept, Page 22.

Figure 13, Surge Eliminator Protective Action, Page 23.

Figure 14, Kleanline Filtering Systems, MB Series and
Figure 15, Kleanline Performance, Page 28.

Figure 16, The Perfect Power Source and
Figure 17, Regulation Concept, Perfect Power Source, Page 32.

LIST OF TABLES

Table 1, The Power Mains Environment, Page 3.
Table 2, Potentially Destructive Power Mains Anomalies, Page 4.
Table 3, Significant Lightning Stroke Characteristics, Page 6.
Table 4, Summary of Risk Factors, Page 18.
Table 5, Comparison of Performance Capabilities, Page 27.
Table 6, Comparison of Regulator Performance, Page 31.
Table 7, Selecting the Protector, Page 33.
Table 8, Regulator Performance Comparison, Page 33.

INTRODUCTION

Background

The recent progress in electronic systems has brought with it an increased sensitivity to the operating environment. One aspect of that environment, the source of power, is also a source of destructive, disruptive and reliability-deterrent voltage anomalies. For more than eleven years Lightning Elimination Associates, Inc. (LEA) has been working in the field of protection systems. One result has been a natural evolution of protective products that match the industry requirements as they have evolved. Of course, tantamount to developing the appropriate product is defining the requirements governing protector performance. Preparing a comprehensive definition of those requirements is as much a part of the protection task as the design of the protectors.

Scope and Objectives

Voltage anomalies can enter a system via the power line or the data, control or other electrical connection(s) to the system. This paper deals only with the potential power source problems. Other papers (1)(2) deal with the other facets of overall systems protection. Table 1 presents a summary of potential power line anomalies and their sources.

Power source problems can be classified into two major catagories; voltage anomalies or complete loss of power. Complete loss of power for a significant portion of a cycle is beyond the scope of this paper and will be treated in a subsequent paper. This paper deals with those phenomena, herein termed voltage anomalies, and in other papers referred to as transients, disturbances and/or interference phenomena.

These anomalous events can be further classified as either destructive or disruptive; both are considered in detail herein.

This paper will provide a definition of the source of these anomalies, derive the resulting specific protection requirements (define the system power threat), identify the available protective concepts marketed today, evaluate them against the known requirements, and present the best available solution to protect against each threat or to protect against the total as a single requirement.

Definition of Terms or Types of Anomalies

Anomalies are defined as parameter variations appearing on or otherwise changing the character of the sine wave from the standard established by the appropriate national electrical code. This includes both voltage and frequency deviations.

Voltage anomalies tend to distort the wave form as illustrated by Figure 1. Although there are basically three forms of wave form distortions (surges, noise and RFI), there are other types of anomalous events that can be destructive and disruptive. These include over-voltages, under-voltages (brownout) and single phasing. Where both neutral and a ground are carried through the system many of these anomalies can appear in common mode and transverse mode, i.e., between line (hot) and ground and/or between line and neutral, respectively.

Following is a list of these anomalies with a short definition of each. The definitions are not meant to be rigorous, but rather to define the scope of the phenomena as used within this paper.

An over-voltage is a condition where the line voltage is elevated to well above the normal RMS voltage and sustained above that level for a period in excess of one cycle.

An under-voltage is a reduction in the RMS line voltage to what has been termed the "brownout" level and sustained for a period in excess of one cycle.

A surge (energy surge) is a rapid increase in the flow of total energy (joules or watt-seconds) to the service entrance, but sustained for periods of less than one-half cycle, for example, due to lightning.

Single phasing is the state of a three phase power source when one phase is momentarily lost or lost for a period of at least one-half cycle somewhere within the public service system.

Radio Frequency Interference (RFI) is a high frequency cyclic phenomenon superimposed on the line frequency by some external influence or some common user. It is most often manifested in the form of a damped sinusoidal wave shape as illustrated on Figure 1.

Electromagnetic Interference (EMI) appears similar to RFI, but is caused by some external, varying magnetic field mutually coupled to the facility feeder lines.

Transients are random voltage pulses of relatively high magnitude, but short duration, usually less than about 100 microseconds.

Noise pulses are similar to transients, but of lower magnitude and duration. They are not considered destructive, but may be disruptive to digital systems.

Electromagnetic pulse (EMP) is a single pulse of energy created by a magnetic pulse such as that created by lightning or a nuclear burst. The magnitude can vary from insignificant to devastating.

Atmospherics is an electrical noise phenomenon related to atmospheric conditions (sometimes the all-inclusive term "atmospheric electricity" is used). It is manifested in the form of noise pulses previously defined and is caused by distant lightning activity as well as pre and post lightning atmospheric conditions. It can also be the result of corona activity from high structures and the impact of the ionasphere field on them.

FIGURE 1

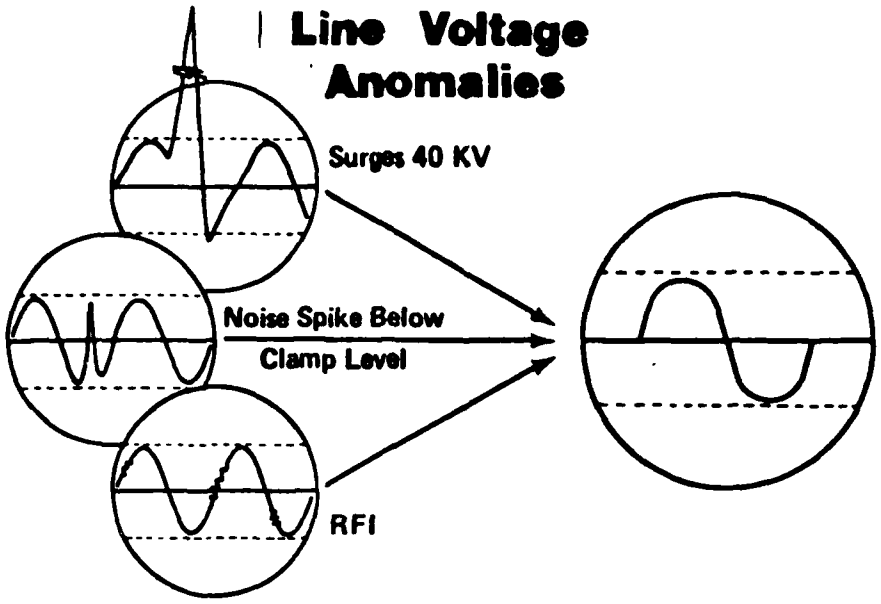

TABLE 1

THE POWER MAINS ENVIRONMENT

POTENTIAL ANOMALIES	POTENTIAL CAUSES							
	LIGHTNING	ATMOS-PHERICS	LOAD SWITCHING	SHOP AND FIELD EQUIPMENT	OFFICE EQUIPMENT	PUBLIC UTILITY	AUTO-MOBILES	HIGH EXPLOSION
OVERVOLTAGE	X		X			X		
UNDERVOLTAGE			X			X		
ENERGY SURGES	X		X	X		X		
SINGLE PHASING	X					X		
RFI		X	X	X	X		X	
EMI				X				X
INDUCED TRANSIENTS	X							X
NOISE		X		X	X			
EMP	X							X

THE LINE VOLTAGE ANOMALY PROBLEM

The Destructive Phenomena

Table 2 subdivides destructive anomalous voltage events into natural and man-made causes and lists the most common potential sources. Lightning is a primary source of natural destructive anomalies. The lightning risk factor is related to the isokeraunic number for the area of concern, the character and location of the facility to be protected (the exposure factor) and the probability factors related to the lightning stroke itself.

TABLE 2

POTENTIALLY DESTRUCTIVE POWER MAINS ANOMALIES

POTENTIAL ANOMALY	NATURAL CAUSES			MAN-MADE CAUSES			
	CLOUD-TO-GROUND LIGHTNING	CLOUD-TO-CLOUD LIGHTNING	TORNADOS	PUBLIC UTILITY	OTHER CUSTOMERS	OWN PLANT	ACCIDENTS AND EXPLOSIONS
OVER-VOLTAGES				X			X
UNDER-VOLTAGES				X			X
SURGES	X				X		X
TRANSIENTS	X	X	X		X	X	X
EMP	X	X					X
SINGLE PHASING	X			X			X

The isokeraunic number (number of lightning days per year) can vary from a low of near zero for the artic regions to a high of over 265 for some equatorial regions. While the maximum for the U.S.A. is 100 for central Florida, the average is about 35. Specific values for a given area can be obtained from a World Meteorological Society publication [3].

The isokeraunic number can be used to estimate the probability of lightning for a given day (if seasons are disregarded) and the number of strikes that may be expected to terminate in any given area for that year. In applying these data two factors must be

considered in concert. First, the number is an estimator only and the actual value can vary considerably, and, of more significance is the fact that it only takes one strike to cause irreparable damage to electronic systems.

In general, lightning results in three specific, but different, forms of hazard, direct strikes producing power or energy surges, induced transients from nearby strikes, and the EMP from the strike's magnetic field.

A direct strike to any or all phase conductors near or at some distance from the facility will create a power surge. The character of this surge is therefore directly related to the character of the lightning strike, the line it strikes and the distance to the point of concern. To define the character we must look at specific cases or parameterize the character relationships. The factors of significance include stroke rise time, stroke peak current, distance between strokes and the facility or the resulting line impedance and the grounding resistances at significant points in between. One significant factor is shown by Figure 2, where the surge voltage is estimated for an average lightning strike for various distances from the station of concern. These numbers must be greatly increased for higher energy strokes. Some measurements indicate that these voltages could achieve levels in excess of 100 Kv if the wire insulation would support that potential without arcing, and if the measurement point was near the stroke. The higher voltages seem to be the norm rather than the exception for communications sites, FM and TV transmitters at remote mountain-top sites.

Table 3 presents a summary of the range of pertinent parameters which were taken from many sources and represent a compilation of many works [4-8]. The shape of typical lightning stroke current is such that it rises rapidly to its peak and then tapers off relatively slowly following a log-normal shaped curve. There are two classes of lightning strokes; the impulsive stroke and the non-impulsive or hot stroke. This characteristic determines the damage caused. The impulsive stroke is the one that creates most of the damage to electronic systems since it embodies a large percentage of high frequency energy. The rate of rise exceeds 10,000 amperes per microsecond and can achieve rates of over 100,000 amperes per microsecond. An impulsive stroke usually lasts for no more than 100 microseconds.

The non-impulsive or hot stroke rises much slower than the impulsive stroke, as slowly as 500 amperes per microsecond. However, it usually lasts much longer, extending out to as long as 10 milliseconds to the 50 percentile. This type of stroke is responsible for many fires and explosions.

<u>Induced transients</u> are the second order effects of lightning activity in or near the area of concern. Their character is related to the

TABLE 3

SIGNIFICANT LIGHTNING STROKE CHARACTERISTICS

Charge Range	-	2 to 200 Coulombs
Peak Currents	-	2,000 to 400,000 Amperes
Rise Time to 90%	-	300 Nanoseconds to 10 Microseconds
Duration to 50%	-	100 Microseconds to 10 Milliseconds
Potential Energy at 99%	-	10^{10} Joules*

*Only a small portion is manifested in a surge, usually less than 10,000 Joules.

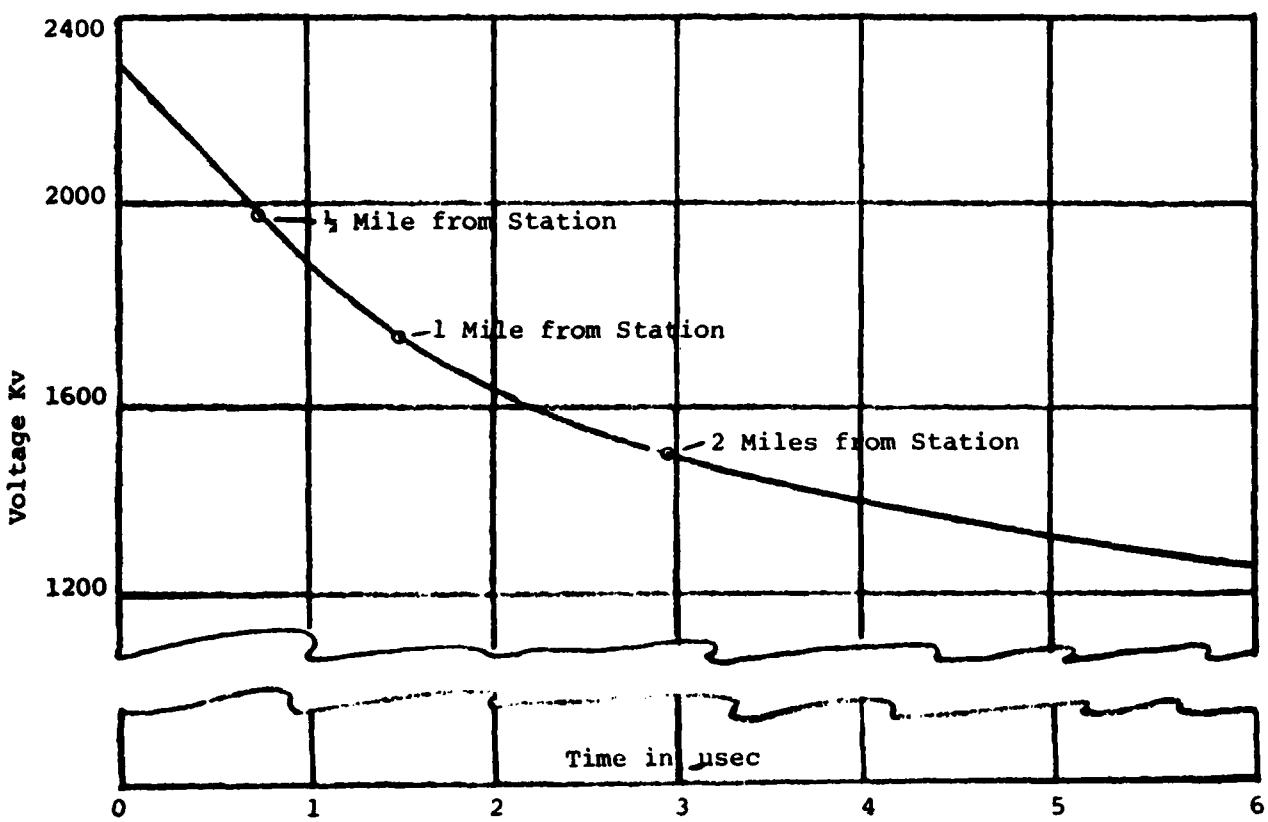

Figure 2, Sample Surge Voltage as a Function of Distance from Stroke to Line

lightning discharge and the system character into which the transient is induced. In general they are high voltage, low energy disturbances. Estimates of the potential for this phenomenon range up to 100 Kv (this value is more dependent on the system circuit parameters than lightning). Installation breakdown levels usually limit the peak voltages to much lower levels, except on primary feeders. Public utilities have found that this phenomenon accounts for most of the lightning faults on lines with a potential of 20 Kv and lower. Lines as short at 50 feet can pick up a significant transient, depending on their proximity to the stroke (9). Induced transients tend to take a shape related to the first differential of the stroke itself; short, negative and/or positive going high voltage pulses of lower energy, but often destructive potential.

Induced transients are created by one of three different, but related phenomena. They are the result of the invisible, but highly potent electrostatic field found between the charged clouds and the earth. This field moves and varies in strength with the charged cloud activity. Cloud-to-earth strikes create the situation shown in Figure 3; cloud-to-cloud strikes create the situation shown in Figure 4.

Atmospherically induced transients are created by sudden variations in the electrostatic potential of the atmosphere. Where the clear air electrostatic field may be 150 volts per meter elevation above earth, during an electrical storm this field can achieve levels of up to 30,000 volts per meter of elevation. A lightning discharge to earth or another cloud will cause this field to collapse, leaving a bound charge on any conductor within its influence. The resulting charge seeks ground through any available path, even jumping large insulators in the way. This creates a voltage pulse that can exceed 100,000 volts. Transients resulting from electrostatic field changes are propagated over long distances. As one specific, an average energy, cloud-to-cloud discharge or a strike to earth one mile away will induce as much as 70 volts per meter of exposed wire into a thus connected system (see Figure 5).

Earth current induced transients are created by lightning strikes to the earth at or near the facility of concern. With the termination of a stroke to earth all the charge induced into the earth by that cloud must move from the point where it was induced to the point of impact of the stroke (see Figure 6), and thereby neutralize the charge. As a result of this motion of the induced charge, earth currents are set up within the earth's crust near the surface. Any good conductors buried in the earth within the charged area will provide a preferred path for these earth currents and thus be the recipient of these severe earth currents. The results are induced transients within the conductor directly related to the earth current character. Current along the sheath of wires will induce transients into the inner conductors through mutual induction or these currents will be superimposed on the conductors without sheaths.

FIGURE 3

Vertical Lightning, Cloud-To-Ground

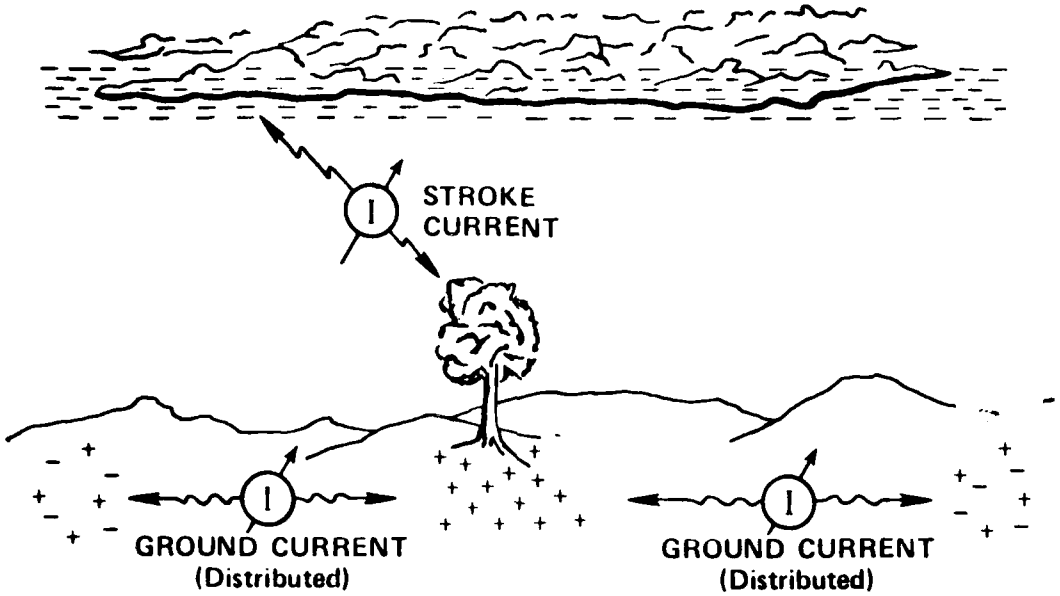

FIGURE 4

Horizontal Lightning, Cloud-To-Cloud

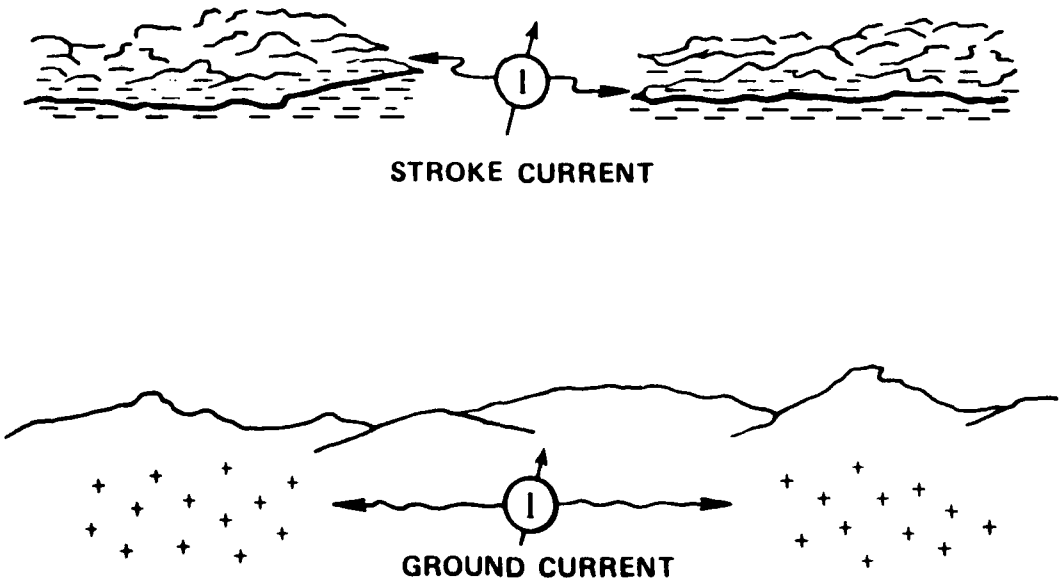

FIGURE 5

Atmospheric Transients

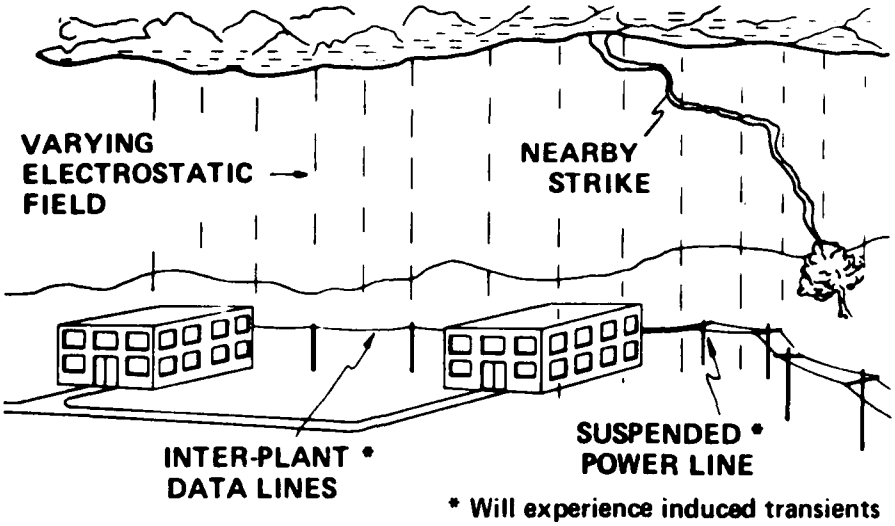

FIGURE 6

Earth Current Transients

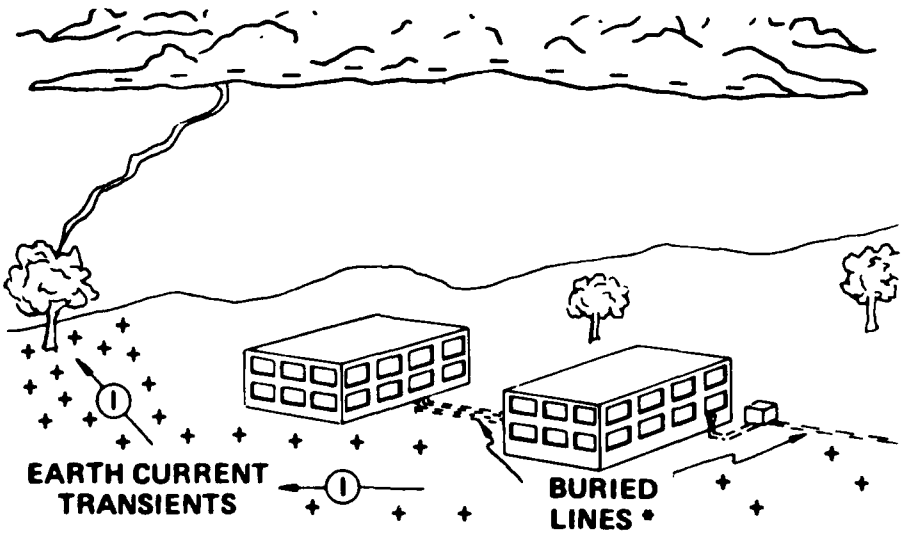

Figure 7 illustrates two other forms of earth current transient effects. The results on the connected system are the same regardless of the cause.

Electromagnetic field induced transients are also created by lightning discharges. For this phenomenon the lightning flash channel acts as a large vertical radiator or antenna. The large, rapid flow of current down the ionized lightning flash channel sets up a rapidly changing electromagnetic field propagating out from the stroke channel in much the same fashion as AM broadcasting stations and is the cause of static in a radio receiver, reflected waves in the transmitters and transients in nearby conductors as shown by Figure 8. Generally, cloud-to-cloud strokes produce predominantly horizontally polarized waves while the cloud-to-earth strokes produce vertically polarized waves. The di/dt's often exceed 100,000 amperes per microsecond.

Tornados create a cyclic variation in the atmospheric field; the induced transients are of a shape similar to a poor sawtooth generator. This phenomenon is the result of a charge separation within the eye of the twister and its rotary motion. As the twister rotates the induced voltage rises and falls with and at the frequency of rotation of the twister. The induced potentials can be damaging to electronic systems if the twister passes near an area of concern.

To protect against all of these destructive forms of induced transients, regardless of their cause, the protective equipment must be designed to satisfy the worst case situation, i.e., at least 99 out of 100 possible events. The protective requirements include the following:

Transient Energy	-	500 Joules
Transient Peak Current	-	20,000 Amperes
Transient Peak Voltage	-	6,000 Volts
Transient Rise Time	-	50 Nanoseconds

IEE Standard 587-1980 presents a summary of findings from several sources. Figure 9 presents a composite of pertinent transient data as recorded by the different investigators.

Man-Made Disturbances or Hazards

Man-made disturbances come from the electrical system's environment as created by man. Again, these disturbances can be the result of a directly injected phenomenon or an externally induced phenomenon. It is futile to attempt to define all the potential causes, but the following identifies and deals with some of the more significant possibilities. Man-made disturbances may be subdivided into those caused by electromagnetic or electrostatic fields and those caused by some form of "accident".

FIGURE 7

Some Earth Current Transients

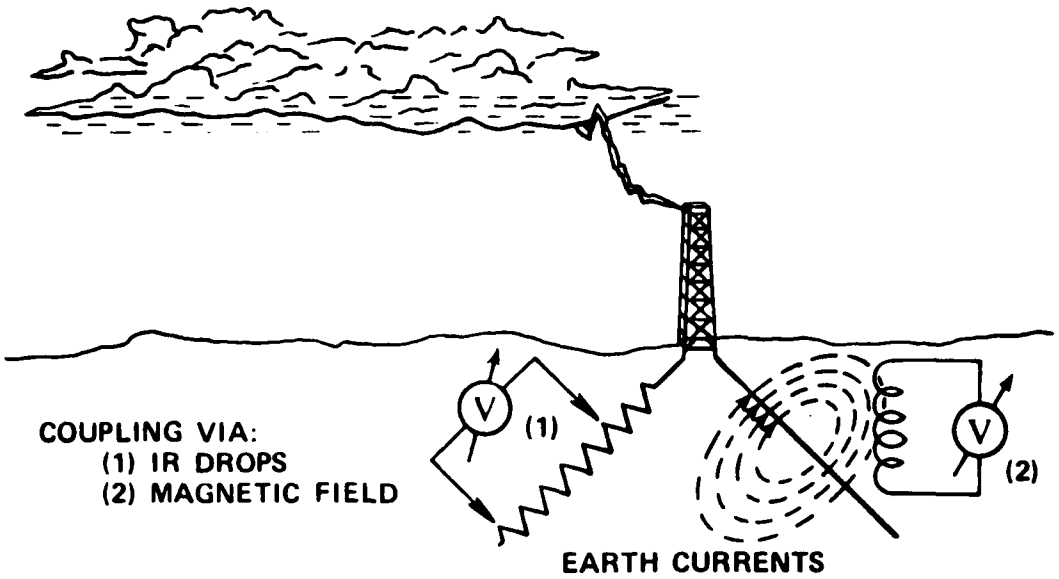

FIGURE 8

Electromagnetic Field Induced Transients

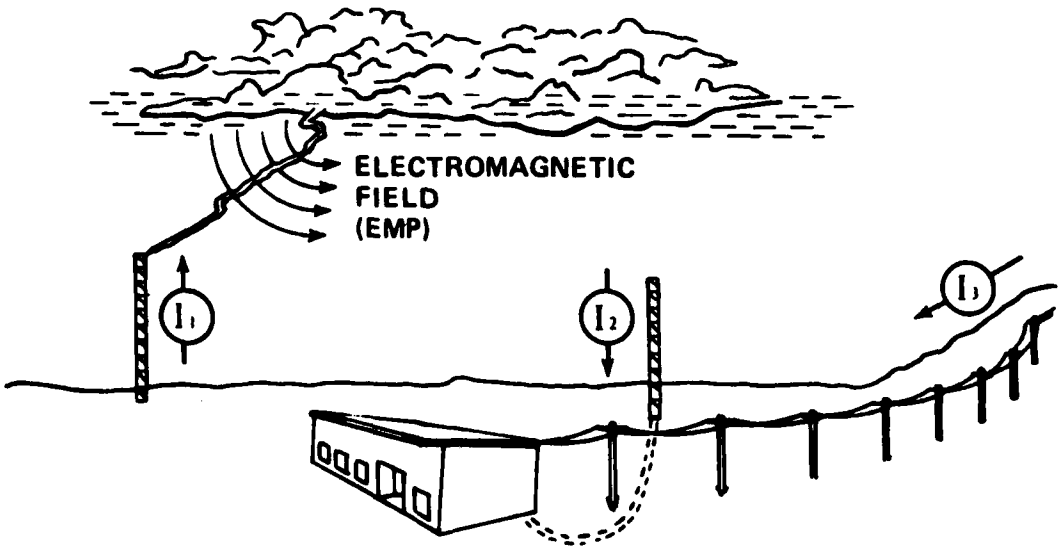

FIGURE 9

Combined Transient Recording Data (IEEE)

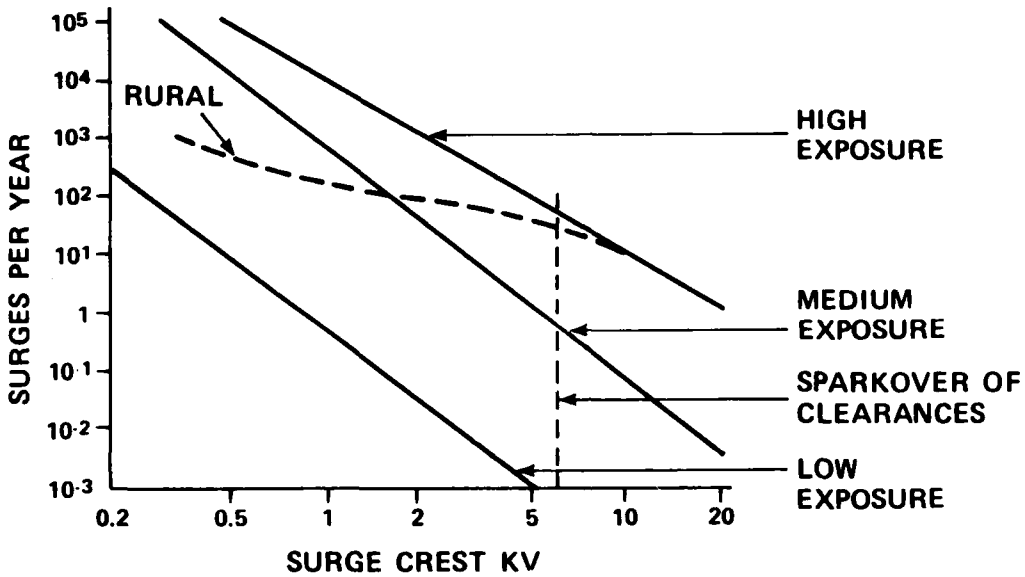

Man-made electromagnetic field transients are usually created by poor installation practices or inflexibility in the plant layout. For example, the power lines for large motors and power lines for sensitive electronics are laid side-by-side in the same cable tray or raceway.

During the planning stages for a plant, it should be understood that power lines carrying any large loads will also carry and/or create transients on those lines as well as lines nearby. Electric motors with poor commutators will radiate transients into nearby lines and cause malfunctions in any electronic equipment sharing the common source of power; SCR switches, switching power supplies and the like are common offenders.

Directly injected hazards are usually the result of Murphy's Law at work. The possibilities are as diverse as the industry itself. Some common examples, that have happened include:

(1) High voltage wires dropping onto the lower voltage lines, arcing over them, or striking them in high winds or accidents.

(2) Failure of insulation or isolation devices which inject a high voltage onto the lines. This happened three times in one year at three similar facilities separated by thousands of miles. In all three cases a related computer was destroyed.

The electromagnetic pulse (EMP) resulting from a large atmospheric explosion, usually nuclear, will also create this phenomenon. The character of the EMP is usually considered similar to lightning, but with much faster rise times (nanoseconds) and much shorter duration (only a few microseconds). The energy induced into a facility can be very high if it is located near the center of the explosion, in excess of 100,000 joules.

Disruptive Transients

A disruptive transient is some form of voltage anomaly of less than a half cycle duration that is superimposed on the power line (mains) at a potential below the destructive level of the equipment it feeds, yet high enough to impair proper operation or significantly reduce the data or equipment reliability (mean time before failure).

The causes of disruptive transients are similar to those classified as destructive, but at lower voltage levels. Specifically, they include atmospherically induced transients, earth current induced transients, EMP induced transients and all of the man-made anomalies. In addition, disruptive transients can be caused by radio frequency interference (RFI) which is created by:

(1) Cross coupling between cables in the same cable tray or raceway,

(2) Nearby radio, AM, FM or TV stations, radar, or

(3) Other types of equipment, such as motors or welders, any varying high current load using the same feeder, or radiated energy from nearby equipment which is manifested in the form of electromagnetic or electrostatic fields.

The potentials and forms of disruptive transients are related to the lines on which they are induced. Some sample forms are shown by Figure 1. Refer back to the definitions for a description. The parameters of concern are:

(1) Peak noise or transient voltage which is found to vary from insignificant to values approaching the destruct level, i.e., nearly 400 volts peak-to-peak on a 120 volt RMS line and over 800 volts peak-to-peak on higher voltage lines. All are usually of very short duration, a few microseconds.

(2) Radio frequency interference which usually takes the form of a damped sine wave with peak voltages as in (1) above for the first cycle and frequencies extending from harmonics of the primary power source to the very high frequency band.

Disruptive Power Anomalies

There are several forms of disruptive power anomalies, some of which are:

A short-time loss of one or more phases is the most common fault. These incidents usually last from one to ten cycles, often with repeated on-off switching transients, and vary significantly in frequency of occurrence with the reliability of the utility servicing the area, and more significantly, with the isokeraunic number for the area.

Extended outages are unusual for developed countries, but do happen, usually because "Murphy" got into the act (a drunk hits a power pole) or human errors of one sort or another. Statistics on duration of outages are about as follows:

90% less than ten minutes
95% less than 30 minutes
99% less than one hour
Worst case has been several days

Over-Voltage and Under-Voltage Situations

These conditions are the result of public utility action and/or customer overloads.

Over voltates are a much less common problem and almost exclusively the result of poor control by the utility. The statistics indicate that over voltages above 110% of the rated feeder voltage and lasting

over one-half cycle are almost non-existent in well developed countries. The probability is so low as to eliminate its consideration except possibly in some "third world" countries. However, protection against this phenomenon can be accomplished at little expense and may be worth it.

Under voltages or brownouts are a very real concern in just about any part of the world. Line voltage drops down to about 85% of the normal rating are becoming an all too common occurrence and are the result of customer overloads and/or the utility deliberately reducing the driving voltage to prevent overloading the generators.

To properly design for extended line voltage variations the designers should plan on variations of between plus ten percent and minus twenty-five percent around the norm, at least at the secondary level.

A remote location where the consumer is at the end of a distribution line or on poorly controlled rural power is the primary area where wide variations in line voltage can be expected.

THE POWER LINES PROTECTION REQUIREMENT

The protection requirements for systems operating off common public utility power lines can be defined by the systems' protection requirements and the related environmental threat. This mandates a division of these requirements into the previous classifications and results in the following:

(1) For protection against potentially destructive anomalies -

(a) Surge energy withstand capability of at least 10,000 joules per phase*

(b) Surge current withstand 160,000 amperes peak*

(c) Peak voltage withstand up to 45,000 volts at service entrance and/or 6,000 volts at wall socket

(d) Reaction time less than 50 nanoseconds

(e) Fail-safe protection against extended over voltage

*Independent of wave shape which is related to the surge energy withstand, i.e., any shape containing that energy level.

These requirements are for such analogue facilities as radio stations, UPS isolated conputers, motors and other more rugged electrical gear. Subdivisions within this catagory are possible if related to the specific point of concern as recommended by the IEEE [10].

(2) For protection against potentially disruptive anomalies -

Protection against destructive anomalies, above, is required, plus:

(f) Low energy transient voltage peaking just under the protection level, but well above the disrupt level. This varies with equipment, but may be taken as any value from about 50 volts peak to 400 volts peak-to-peak for a 120 volt RMS line or as much as 1,000 volts or more for the higher line voltages.

(g) Radio frequency filtering for a band of frequencies starting at 1 KHz and extending to 100 MHz. If protection is provided against all of the other potential events, attenuation in excess of 40 db is usually not required.

(3) For protection against primary power system anomalies -

Protection against items (1) and (2) above plus:

(h) Voltage regulation to about ±5% with input variations of from +10% to -25%; better regulation is not required. The fact that closer regulation can be achieved within bounds does not make it a requirement or even desirable.

Regulation response time requirements are related to the protective system filter characteristics, that is, the filtering capability must eliminate variations the regulator does not respond to. For example, for a 60 Hz system, if the regulator responds to 1/4 cycle or about 4 Ms the filter should be capable of filtering out all transients of lesser duration.

(i) Protection against power outages or single phasing (i.e., the loss of one or more phases of a three phase power source for a significant period). This protection must take the form of a power source substitute or must protect against the impact of power loss by performing an orderly shutdown (orderly shutdown is defined as providing enough warning time to preserve data, status and/or essential functions). For many situations audible warning and complete shutdown within one to three minutes will satisfy most requirements. At this point the individual customer must define his specific requirements. Where complete loss of power cannot be tolerated for even very short periods or low probabilities, an uninterruptible power source is required. Only ten minutes of uninterrupted power is sufficient for over 90% of the situations.

The Relative Risk Factor

The foregoing data is a compilation of data derived from many sources relative to these phenomena within the context. For example, given that lightning exists, what is a reasonable risk range for the pertinent perameters? Now, it is also necessary to relate the individual risk phenomenon to each other. To that end IBM sponsored a landmark study that provides the only well documented details as to this relationship for computer installations. In using the data it should be recognized that the risk relationships are basically for urban areas and not necessarily representative of the experiences at mountain-top sites, rural areas or third world countries. Table 4 presents a summary of the risk factors by catagory as IBM identified them.

To deal with the differences between the urban area situation and that related with the less populated areas, consider the one factor illustrated by Figure 9. Note that as the data points are moved

to more rural areas the risk of exposure to higher levels of voltage transients, surge currents, etc. increases significantly. This is because there are less subscribers to share the problems.

TABLE 4

Anomaly	Percentage	Number per Day
Over-voltages, including surges	2%	(6 per year)
Under-voltages	25%	1
Outages, including single phasing	1%	(3 per year)
Common mode transients*	27%	1
Transverse mode transients*	45%	2

*49% of these were the damped RFI waveform

These data further indicate that for the average urban U.S.A. installation a disturbing voltage anomaly of some form may be expected on the average of more than four times per day for sensitive electronic systems. In summary, there will be disturbances; you must be prepared.

PROTECTION AGAINST DESTRUCTIVE ANOMALIES

Concepts and Considerations

There are numerous and diverse devices marketed as surge protectors. Manufacturers make similar performance claims, yet the units vary in cost, physical size and components. Their performance is seldom related to the threat and different performance parameters are often used to define their capability. It is therefore necessary to evaluate all such devices against some fixed standard that is representative of the actual threat. If compromises are made below this standard the related risk should be specifically defined so the buyer is properly informed.

Of equal importance to performance parameters is the method of employment of the device within the protected system circuitry. To that end, there are two ways of implementing the protective device within the circuit. The protector can be installed in parallel with the device to be protected as illustrated by Figure 10 or it can be installed in series with the incoming power between the source and the system to be protected as illustrated by Figure 11.

The Parallel Protector Concept

All of the conventional surge protectors with the possible exception of isolation transformers and LC filters are designed to be wired in parallel with the load they protect.

Note: Isolation transformers and LC filters provide no lightning or surge protection and, when exposed to these anomalies, are subject to destruction themselves.

An analysis of the functional circuit diagram of Figure 10 reveals deficiencies in the performance effectiveness of any parallel protector, device or assembly, as follows:

(1) Because it forms a parallel circuit with the protected system the "protected" must share the surge with the protector. Of course, the protector is supposed to become a very low impedance path in comparison to the protected equipment -- at just the right time. Yet it must not compromise the system performance or waste power. Two other factors further mitigate the performance of the parallel protector. The clamping voltage must usually be set high (several times the normal operating voltage) to prevent inadvertant operation or excessive parasitic power loss and the parallel impedance cannot be too low or it will be subject to the high energy from the driving power source. The latter problem is accentuated by low impedance sources. Also, the clamping ratio is often too high for very sensitive electronics. Ratios in the order of from five to twenty to one are not uncommon for these devices. This means that peak voltages of up to 4 Kv or more can be registered on a 115 V RMS line under high surge current conditions:

FIGURE 10

The Parallel Protector

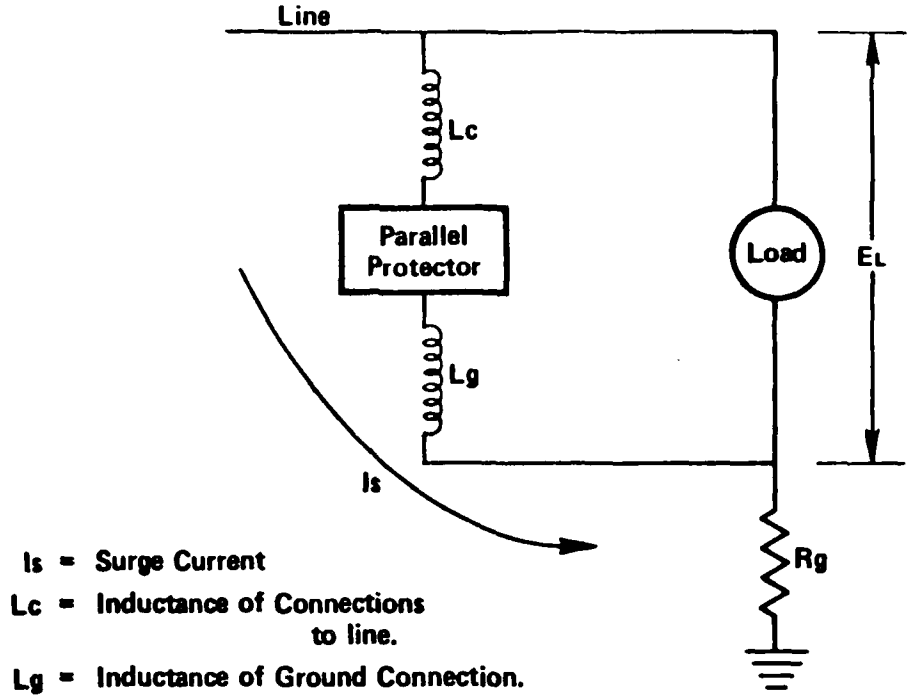

FIGURE 11

The Series Hybrid Concept

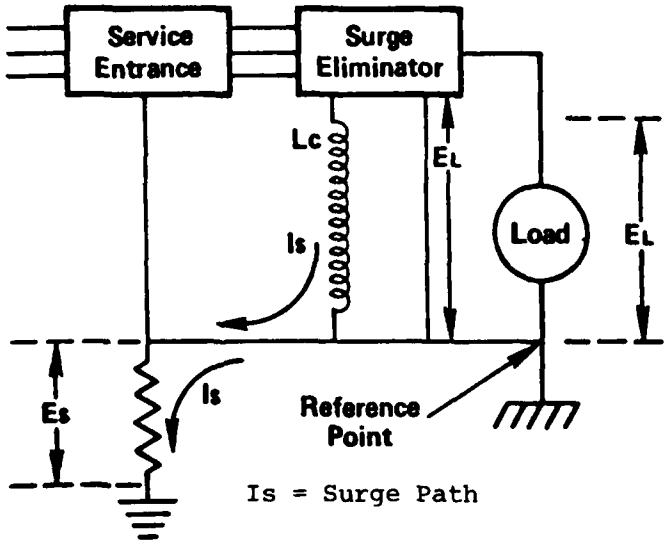

(a) The clamping voltage is the peak voltage at which the protector starts to limit the line voltage.

(b) The clamping ratio is the ratio of the line voltage during surge peak current vs the initial clamping voltage.

(2) The wiring that integrates the parallel protector into the circuit becomes a series impedance to the flow of the fast rising surge currents (also shown by Figure 10). Rising current rates in the order of 100,000 amperes per microsecond are not uncommon. Under these conditions each meter of length of connecting wire may be considered about 1½ microhenries of inductance. The result is a significant series impedance in the circuit and the voltage developed across these connections adds to the voltage across the "protected" system.

In summary, the parallel protector concept is considered a compromise. The only advantage it has is ease of installation. Some of the devices in this class are low cost, others (assemblies) are very expensive; none satisfy the total protection requirements.

The Series Hybrid Protector

The series hybrid Surge Eliminator (SE) developed by LEA, Inc. (patent pending) eliminates the series impedance influence of the connecting wires by separating the surge current path from the control voltage sensor as illustrated by Figure 12. The SE solves the high clamping ratio problem by using the series impedance to dissipate any over-voltage and separate it from the load. It solves the high clamping voltage problem by separating the unstable, power wasting components from the on-line control circuit.

To illustrate Surge Eliminator performance consider the situation depicted by Figure 13, which presents a badly distorted sine wave for a 120 volt RMS hot-to-neutral situation where several forms of destructive voltage anomalies are shown. The equipment destruct level is assumed to be above the ±200 volts peak; normal peaks are about 166 volts. The surge protector must prevent the voltage from rising significantly above that level. To accomplish this the SE functions as follows:

(1) The voltage controller assembly constantly monitors the output voltage with no significant parasitic loss.

(2) When the voltage rises above the clamp voltage, usually set at 1.2 times the normal peak voltage, the voltage controller acts as a constant voltage device holding the voltage at the selected clamp level.

(3) If the anomaly is more than a small transient the High Energy Dissipation Assembly is activated dissipating only the surge energy like a clipper.

FIGURE 12

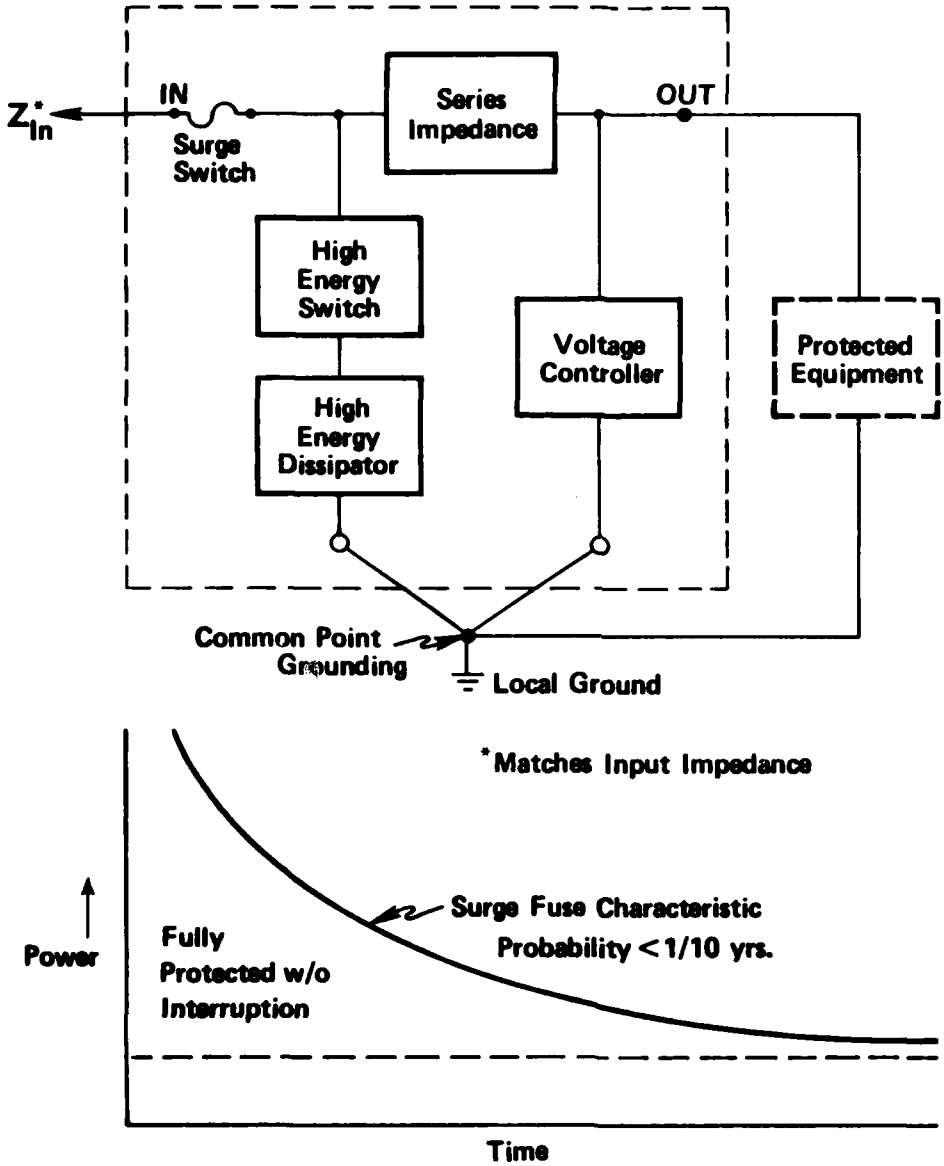

LEA Surge Eliminator Concept

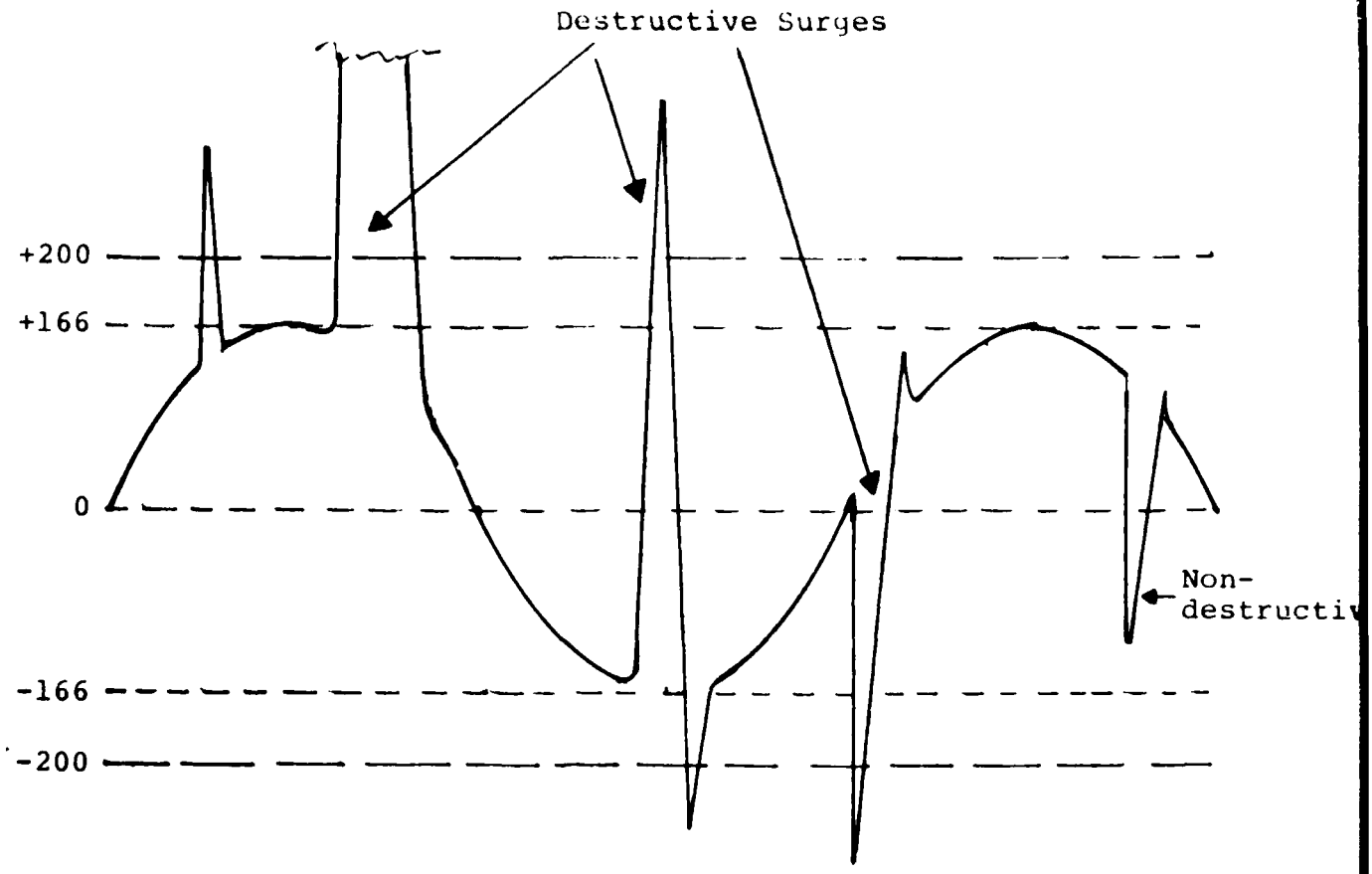

A, Before Protection

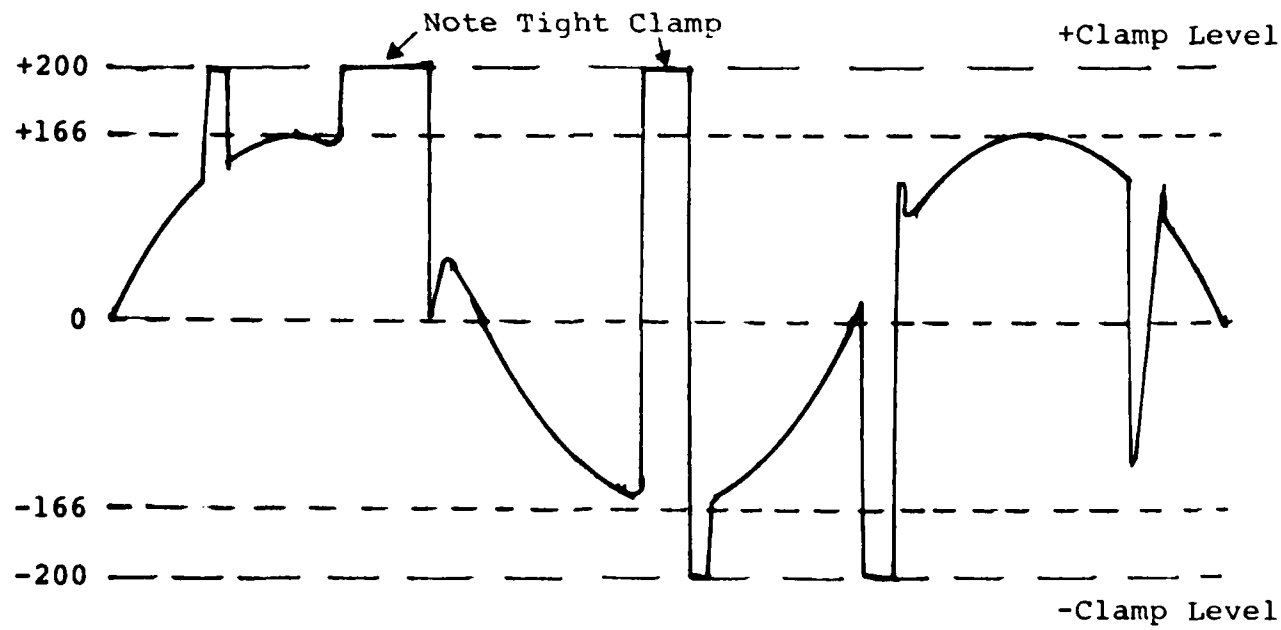

B, After Protection

Figure 13, Surge Eliminator Protective Action

(4) Much of the energy is dissipated within the unit rather than attempting to by-pass it to compensate for the influence of the grounding system surge impedance. The remainder is dissipated in the grounding system and related connections.

During the SE operation the voltage to the protected system is maintained within the operating limits of the system, neither being crowbarred to or near ground potential, nor allowed to rise significantly above the clamp level. As soon as the surge or transient has passed the SE returns to a totally passive mode with no interruption of service.

The Surge Eliminator series element is a low pass filter to attenuate the fast rise times related to lightning and the EMP. It also provides some functional redundancy to the voltage control function.

The performance specifications for most Surge Eliminators include:

(1) React within 5 nanoseconds (EMP requirement),

(2) Dissipate 50,000 joules of surge energy independent of wave form (volts x amperes x time),

(3) Pass between 160,000 and 200,000 amperes peak surge current without failure, and

(4) Filter EMP and 10 db of RFI between about 100 Kc and 100 MHz.

The series hybrid Surge Eliminator provides absolute protection against line voltage surges of any form. NO LEA CUSTOMER HAS LOST ANY EQUIPMENT PROTECTED BY AN LEA SE THAT WAS PROPERLY INSTALLED.

A comparison of SE Performance based on the four factors of significance; energy handling (joules), reaction time, clamping level, and/or clamping ratio, reveals that there is no other protector on the market that compares to the LEA SE performance, regardless of the price.

PROTECTION AGAINST DISRUPTIVE ANOMALIES

Concepts and Considerations

Disruptive transients, as previously defined, are the largest segment of hazards presented by the power mains. The protective concept must protect against destructive anomalies as well as the non-destructive but functionally disruptive anomalies. The protector for digital equipment must provide, in addition to lightning protection, both RFI filtering and noise rejection such that the peak voltage from either phenomenon does not exceed about ±20% of the normal line voltage around any point in the sine wave.

Protectors marketed for this purpose are limited to some form of series type protector. No parallel device could significantly influence all of the stated problems, yet some suppliers make unsubstantiated claims to the contrary. The potential types of protector for disruptive anomalies include RFI filters-LC networks, isolation and so-called super-isolation transformers, and multi-stage series hybrid systems.

In reviewing these potentially protective concepts, the parallel types such as encapsulated MOV's, gas tubes and zeners or transzorbs, etc., may be dismissed as obviously not effective, even though their packaging does not always make this clear. Traditionally, some form of LC filter is still used to deal with these anomalies. In reviewing contemporary RFI filter/isolation transformer concepts we find:

(1) The RFI filters provide only RFI filtering from about 150 KHz to over 50 MHz, but no significant lightning protection.

(2) The isolation transformers provide filtering from about 1 KHz to 1.5 MHz, but again, no significant lightning protection.

Both of these filters provide a measure of noise suppression within the filter characteristic and/or as a result of the shielding concept. Both are usually effective only against transverse mode anomalies. Common mode anomalies are often either neglected or dealt with in some limited or unorthodox manner, such as not carrying the ground wire through the filter uninterrupted. Some of the super-isolation transformers do provide both modes of filtering, but the upper frequency is limited to about 1.5 MHz, yet there are significant problems at 10 MHz.

In summary, none of the RFI filters, isolation transformers or super-isolation transformers presently available can satisfy all the requirements for protection against both destructive and disruptive line voltage transients. LEA has therefore developed the multistage series hybrid protector called the Kleanline Electronic Filtering System to satisfy this need.

The Hybrid Filter Concept

The LEA Kleanline series hybrid concept is based on the premise that a protector must be designed to deal with all the potentially disruptive voltage anomalies in common and transverse modes including both broad band filtering and surge/over-voltage protection. Figure 14 illustrates the functional logic used in the Kleanline Filter to accomplish protection against all of the known hazards of a transitory nature as well as sustained over-voltages.

Kleanline Electronic Filtering Systems perform as the name infers; they clean the power mains of all unwanted electrical anomalies from lightning related power surges to noise pulses of disturbing amplitudes and less than a microsecond duration in both common and transverse modes. Further, these units satisfy the CSA, UL and VDE specifications. This unusually comprehensive concept has been proven by many major firms in the data processor field as the only totally effective protector.

LEA Kleanline Filters are designed around a four-stage, series hybrid concept shown on Figure 14. The first section is a Surge Eliminator which eliminates any over-voltages or power surges in excess of a voltage equal to 120 percent of the normal peak line voltage as previously described.

The two series filters are stagger-tuned to provide RFI, EMI and EMP filtering across a band of frequencies ranging from 1 KHz to well over 200 MHz, providing from 35 to 40 db of filtering in both common and transverse modes without introducing more than about 10 microamperes of leakage current to ground (earth) for the plug-in units. Refer to Figure 15 for a typical band rejection characteristic.

The second stage removes any high voltage transients that may pass through the first stage. This voltage limiter reacts within 5 nanoseconds and will remove any form of over-voltage above clamp voltage.

A final stage is included to remove the "leftovers", the low voltage noise spikes and RFI in both common and transverse modes. This function is intended to follow the sine wave and strip it at any point in the phase relationship at about $\pm 20\%$ of peak voltage. As a result no significant anomaly can pass through the Kleanline Filter.

In summary, the Kleanline Electronic Filtering System is a comprehensive system of active and passive filtering which removes the significant voltage anomalies in an economical and effective manner. It then clips off any overshoot above the clamp level and, finally, provides a reasonably clean sine wave output.

As a matter of academic interest, Table 5 presents a comparison of performance capabilities of contemporary protectors marketed to provide protection against destructive and disruptive anomalies. Even a cursory comparison at the most basic levels proves that some form of series, multistaged hybrid protector is required to satisfy all the requirements is complete protection is desired.

TABLE 5

COMPARISON OF PERFORMANCE CAPABILITIES

(2) Protector	Makers	Surge Protection	RFI	Noise Rejection
RFI Filters	Corcom, Aerovox, C.D.	NONE NONE NONE	HF HF HF	Filter Related Filter Related Filter Related
Isolation & Super-Isolation Transformers	Topaz, Deltec, Solar	NONE NONE NONE	LF(1) LF(1) LF(1)	Filter Related Filter Related Filter Related
Kleanline	LEA, Inc.	Total Protection	HF and LF	Absolute Noise Stripping

Notes - (1) More than required to achieve some noise rejection.

(2) Parallel protectors such as Transtector, GE, MOV's, TII and other gas tubes are not included as they include no RFI or noise filtering.

(3) HF is high frequency RFI filtering, LF is low frequency RFI filtering.

FIGURE 14

Kleanline Filtering Systems, MB Series

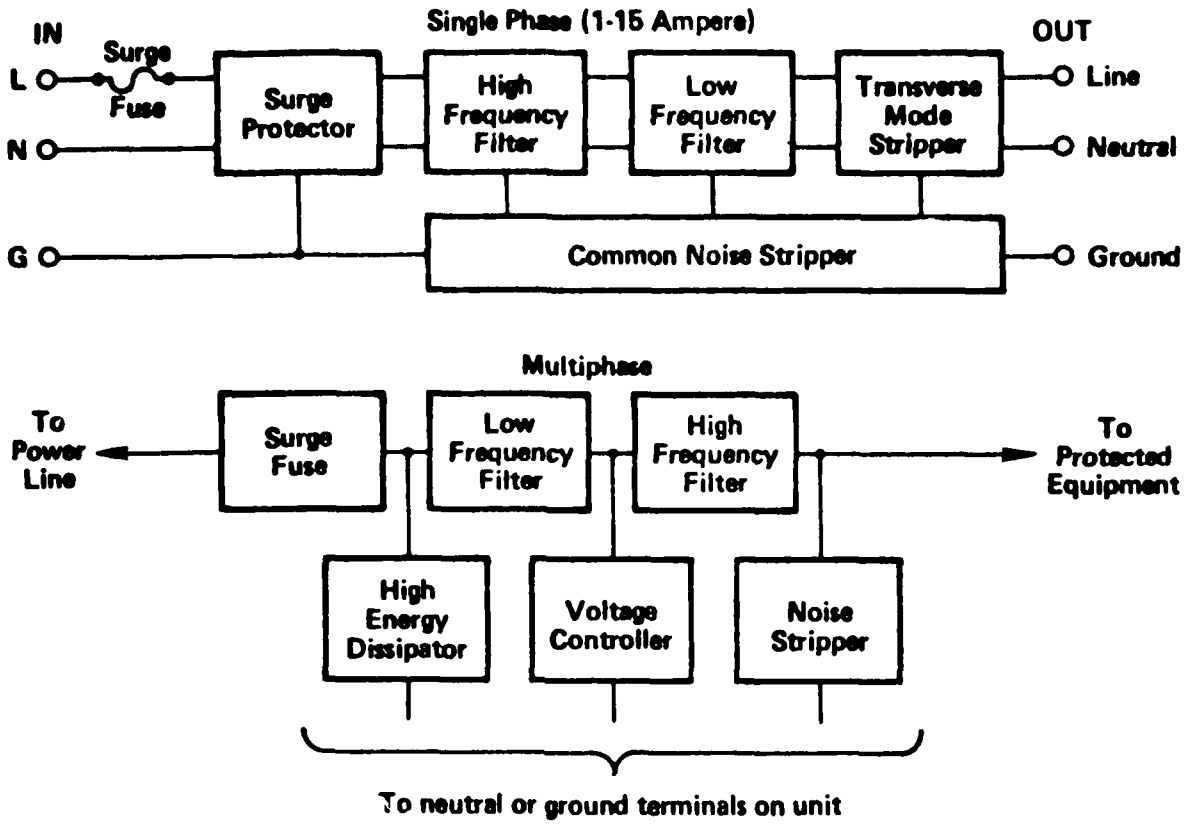

FIGURE 15

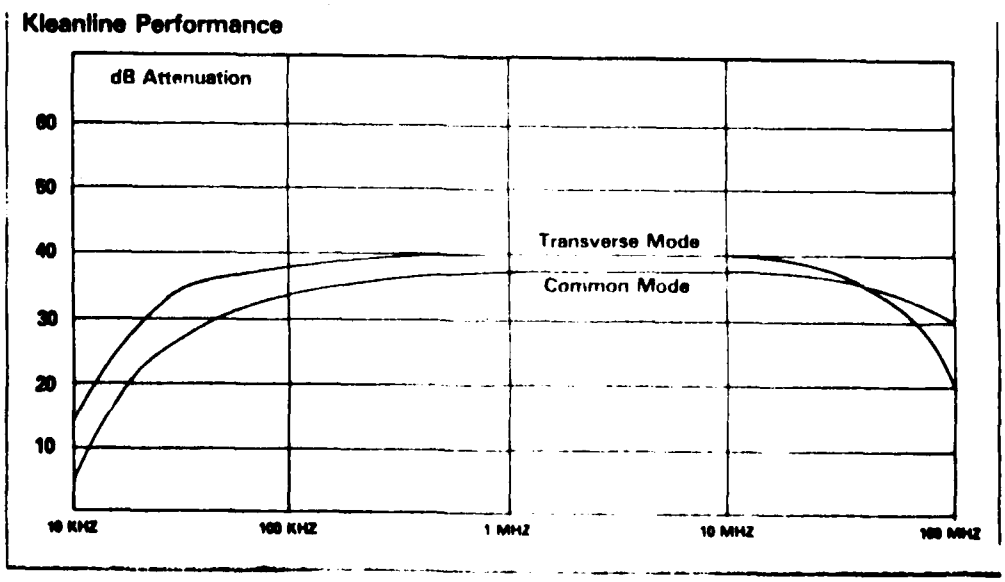

PROTECTION CONCEPTS FOR DISRUPTIVE VOLTAGE LEVELS

Concepts and Considerations

A disruptive voltage level has been defined as including sustained over-voltages, under-voltages (brownouts), loss of power and the related single phasing phenomenon. The concepts employed to protect against these voltage anomalies are very limited, including various types of transformer technology, various forms of switching technology and some type of on-site generator or UPS. Each of these concepts have some advantages and some disadvantages; none of them alone satisfies all of the protective requirements (see Requirements Definition).

The various transformer concepts include:

(1) The saturable reactor which is designed to operate under normal voltage at saturation. Over-voltages tend to over saturate the reactor and produce no appreciable increase in voltage at the secondary. Under-voltages are below saturation and therefore result in some effective increase in the transformer output. The operating range is obviously very limited, the waveform distortion is often intolerable, and they are very load sensitive.

(2) The ferroresonant transformer or line conditioner is the most popular solution in use today -- basically because of lack of competition in the past. As the name implies, this device is a resonant LC network, static generator or magnetic flywheel device. Through use of a combination of L and C in various resonant and/or buck-boost winding configurations they seek to stabilize the output voltage at some predetermined voltage. Over a limited range of input voltages and load ranges they are reasonably effective, but the user must be able to tolerate the resulting high series dynamic impedance, limited regulation range, inrush current limiting and high parasitic power loss (poor efficiency). On the positive side they do provide inexpensive regulation at the lower Kva ratings and, if significantly under rated with respect to load current (less than 50%), they provide a significant amount of single cycle fill-in. They offer no lightning protection and only low frequency RFI filtering (1 KHz to 1.5 MHz) in transverse mode only.

(3) The motor driven or manually operated tap switcher/transformer is a good alternative where slow reaction time and switching transients can be tolerated. These devices use multi-tapped transformers that are switched to regulate the output voltage. The motor driver options are expensive and no longer a cost-effective option. These devices offer no lightning protection and very little low frequency filtering. The usual configuration creates significant transients during the switching operation.

(4) The motor driven or manually adjustable transformer (variable transformer, Variac) is very similar in concept to the tap switcher (3) above, except the taps are closer together (one per turn). These are a significant improvement over the tap switcher, but display the same disadvantages to a lesser degree. For example, the switching transients are normally much lower. These units do have a wide range of control, but little filtering, and the added costs render them non-competitive except for special applications.

(5) Electronically switched transformers include two basic types, zero voltage crossover switching and zero current crossover switching. Of the two, zero voltage switching is the more popular because of the lower cost. Both concepts permit fast switching, as much as once every half-cycle if necessary. Both can be efficient, up to 96%, both can be produced with as much isolation as the so-called super-isolation transformers, and both can be produced with any number of options. On the negative side, both cost more for low Kva ratings and both suffer reliability problems because of the complex electronic control requirements.

The zero voltage switcher senses the peak voltage. When it strays beyond the prescribed boundries it then switches to the next tap, up or down at the next zero crossover voltage point. Often, a significant transient is generated, and further, two switches can be in the "on" state at the same time and switching jitter can occur when the line voltage tends to hover at a switching point. The zero current switcher usually senses the peak. However, they switch at the next zero current crossover point. To do this they must sense current flow as well as the voltage which adds to the complexity.

The Perfect Power Source (Patent Applied For)

The perfect power source must regulate, protect and filter. If only part of these functions are satisfied the unit is incomplete and only partially effective.

The LEA Perfect Power Source (PPS) provides all of the required functions in one package as shown by Figure 16 including protection, broadband filtering and regulation. The system it services is protected against any anomaly short of complete loss of power, much less than one percent of the possible hazards.

The PPS uses the inherent filtering capability of the Kleanline Electronic Filter as the basis for the PPS design and simple, reliable relay switching to change the taps. The two problems formerly associated with relay switching are overcome as follows:

(1) The slow switching problem and potential loss of a portion of the sine wave was overcome by using a close-before-open concept.

(2) The potential switching transient and short circuit current resulting from two taps closed for an instant (about one millisecond) has been eliminated by the filter components as illustrated by Figure 17.

The resulting LEA PPS regulates the output voltage to within 5% of the nominal voltage with input variations of from about minus 25% to plus about 10%. Rapid tap changing is eliminated by switching only when there is at least a 1% change in output voltage.

No significant transients, noise or RFI are generated within the PPS or passed through it. No portion of a sine wave is lost or distorted. No harmonic distortion is introduced and the dynamic impedance is not significant.

Table 6 presents a comparison of pertinent performance characteristics for the ferroresonant regulators and the LEA Perfect Power Source. The only requirements the PPS does not satisfy are those related to loss of power on one or all phases. To overcome the single phasing, warning and automatic shutdown options are offered. Compare the PPS to ferroresonant devices that claim to provide single phase or loss of cycle fill-in, but offer only some small measure of capability by derating the regulator by as much as 50%.

TABLE 6, COMPARISON OF REGULATOR PERFORMANCE

CONSIDERATIONS	FERRORESONANT	PPS(1)
Load Sensitivity	Very Sensitive	Insensitive
Regulation Range	+10% -20% maximum(4)	+10% -25%
Dynamic Impedance	Very High	Low
Noise Filtering	About 1 Khz to 1.5 Mhz	1 Kc to 200 Mhz
Waveform Distortion	High(4)	NONE
Inrush Current Impact	Field may collapse, will create transients	NONE
Carry-Through Capability	If oversized about 100%(3)	Less than ¼ cycle
Cost Factor	See Figure 17	See Figure 17
Harmonic Distortion	High	NONE
Efficiency	50 to 85%(2)	90 to 96%
Lightning Protection	NONE	Unlimited
Audible Noise	High	Insignificant
Over-voltage Protection	NONE	Protected

Notes: (1) The LEA Perfect Power Source
(2) Directly related to percent load vs rating
(3) Inversely related to percent load
(4) Load Sensitive

FIGURE 16

The Perfect Power Source

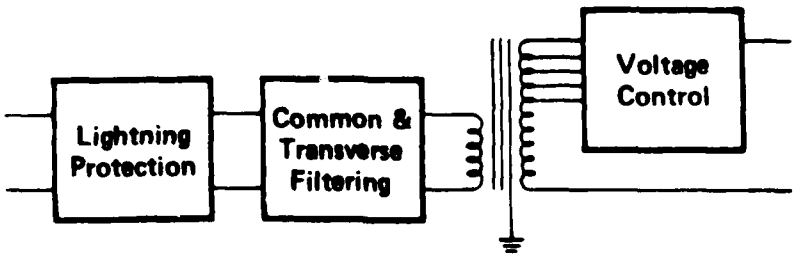

Input:
80 to 135V RMS

Output:
115V ± 5V RMS

FIGURE 17, REGULATION CONCEPT, PERFECT POWER SOURCE

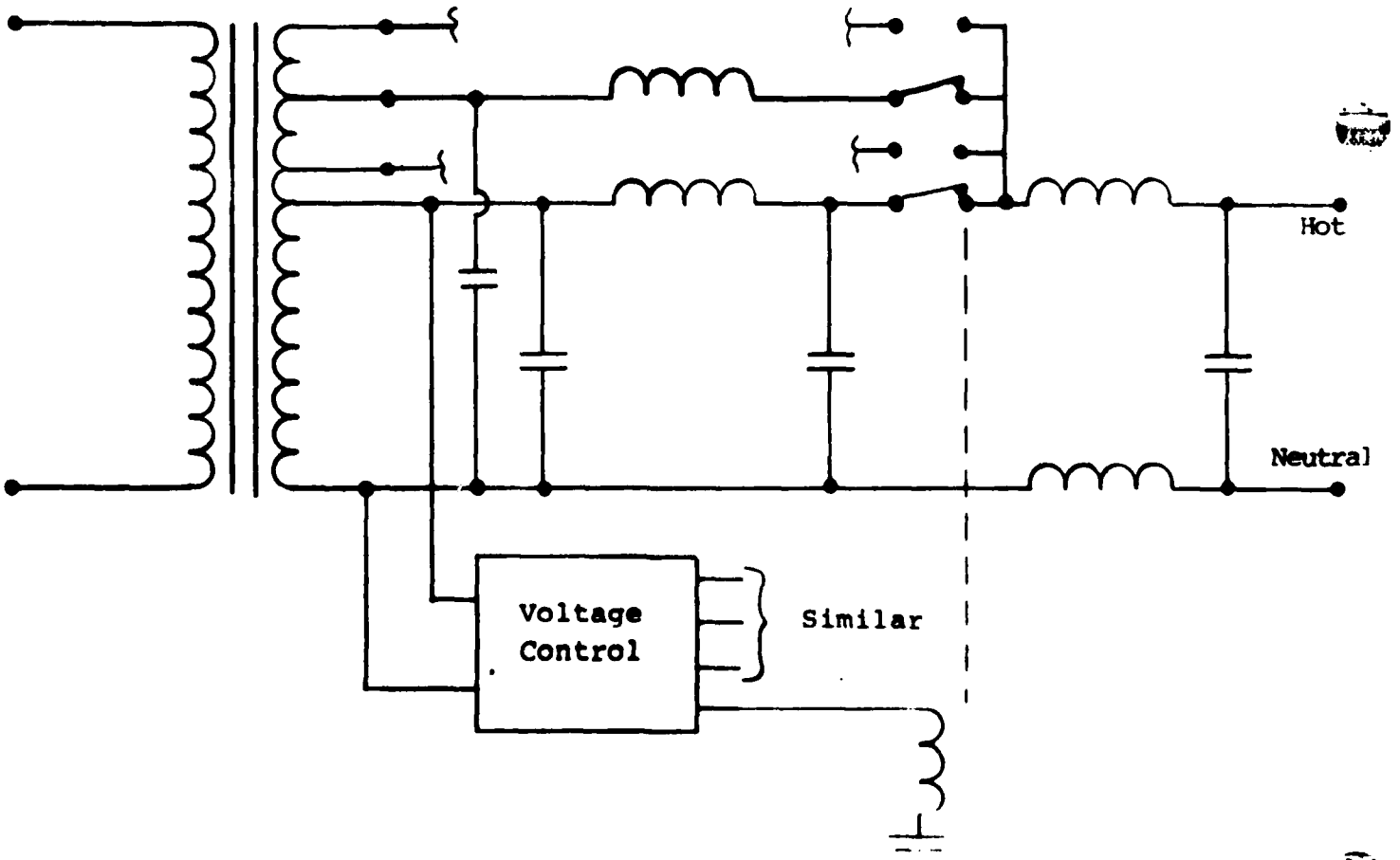

SUMMARY OF PROTECTION RECOMMENDATIONS

We have found that there are three levels of protection requirements, and this mandates three levels of protectors to satisfy these requirements:

(1) For protection against destructive anomalies use the Surge Eliminator (SE),

(2) To add protection against disruptive transients use the Kleanline Electronic Filtering Systems (MB),

(3) To add voltage regulation use the Perfect Power Source (PPS).

Relating this to the incident risk established by Table 4, Table 7 below identifies the scope of protection provided.

TABLE 7

Selecting The Protector

Anomaly	SE	MB	PPS
Overvoltage	ALL	ALL	ALL
Undervoltage	None	None	ALL
Transients	Destructive	ALL	ALL
Outages	None	None	None
Percentage Eliminated	29%	78%	99%+

Comparing the Perfect Power Source to competitive protector/regulators, Table 8 below establishes the advantage of the PPS over the rest of the marketplace.

TABLE 8

Regulator Performance Comparison

	Percentage Protection Against:	
Type	Destructive	Disruptive *
Ferroregulator	None	10%
Isolation Transformer	None	27%
Competitive Switchers	None	12%
PPS	ALL	99% *

*One form of disruptive anomaly can only be eliminated by some form of constant voltage source, such as a generator plus a UPS. One or the other will only eliminate some portion of the remaining one percent.

BIBLIOGRAPHY

(1) Lightning Strike Elimination, The Story of Dissipation Array Systems, Roy B. Carpenter, Jr., September 1979, Report No. LEA-79-1

(2) Protection Requirements and Concepts for Data and Control Lines, Roy B. Carpenter, Jr., November 1980, Report No. LEA-80-8

(3) World Distribution of Thunderstorm Days, World Meteorological Organization, Secretariat, Geneva, Switzerland, 1953

(4) Atmospheric Electricity, A. Chalmers, Pergamon Press, 1967

(5) Lightning Protection, R. H. Golde, E. Arnold Publishers, 1973

(6) Lightning, M. A. Uman, McGraw-Hill, 1969

(7) The Lightning Book, P. E. Viemeister, The MIT Press, 1972

(8) Lightning Protection, J. L. Marshall, Wiley & Sons, 1973

(9) Characterization of the Electrical Environment, D. W. Bodle, et al, University of Toronto Press, 1976

(10) IEEE Guide for Surge Voltages in Low-Voltage AC Power Circuits IEEE Std. 587-1980, Sponsored by Surge Protective Devices Committee of the IEEE Power Engineering Society

END

FILMED

3-84

DTIC