AD-A124 702 DECENTRALIZED CONTROL OF A LARGE SPACE STRUCTURE AS APPLIED TO THE CSDL 2 MODEL(U) AIR FORCE INST OF TECH WRIGHT-PATTERSON AFB OH SCHOOL OF ENGI.. E S ALDRIDGE 1/2

UNCLASSIFIED DEC 82 AFIT/GA/AA/82D-1 F/G 22/2 NL

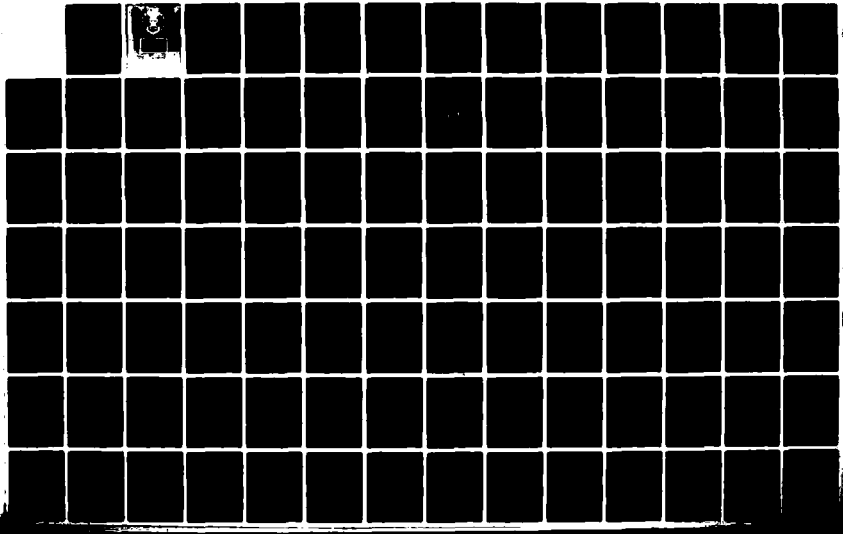

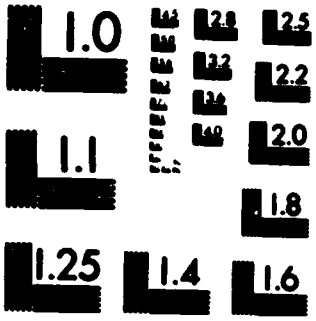

MICROCOPY RESOLUTION TEST CHART
NATIONAL BUREAU OF STANDARDS-1963-A

AD A 124702

AFIT/GA/AA/82D-1

DECENTRALIZED CONTROL OF A LARGE SPACE STRUCTURE AS APPLIED TO THE CSDL 2 MODEL

THESIS

AFIT/GA/AA/82D-1 Edward S. Aldridge
2d Lt USAF

Approved for public release; distribution unlimited.

AFIT/GA/AA/82D-1

(1)

DECENTRALIZED CONTROL
OF A LARGE SPACE STRUCTURE
AS APPLIED TO THE CSDL 2 MODEL

THESIS

Presented to the Faculty of the School of Engineering

of the Air Force Institute of Technology

Air University

in Partial Fulfillment of the

Requirements for the Degree of

Master of Science

DTIC COPY INSPECTED 2

Accession For
NTIS GRA&I ☑
DTIC TAB ☐
Unannounced ☐
Justification
By
Distribution/
Availability Codes
Dist | Avail and/or Special
A

by

Edward S. Aldridge

2d Lt USAF

Graduate Astronautical Engineering

December 1982

Approved for public release; distribution unlimited.

Preface

To my thesis advisor, Dr. R. A. Calico, I am grateful for your guidance and patience as advisor and your knowledge and insight as instructor. Your support in the course of this work was invaluable. I hope the results contained herein may be of value to you.

To my typist, Shirley, thank you for your smile and your typing services, the latter of which made this final product possible.

Finally, to my GA and GAE classmates, thanks for your friendship, support and empathy. You're the ones who made AFIT a worthwhile experience.

Edward S. Aldridge

Contents

		Page
Preface		ii
List of Figures		v
List of Tables		vi
Abstract		vii
I.	Introduction	1
II.	Model Configurations	5
	CSDL 1 Model	5
	CSDL 2 Model	9
III.	System Model	21
	Equations of Motion	21
	Control Model	23
	Modal Control	27
	N Controllers	30
	Three Controllers	32
	Four Controllers	37
	Sensor/Actuator Requirements	39
IV.	Transformation Technique	42
V.	Computer Model	49
VI.	Investigation	54
	Outline	54
	Modal Selection and Grouping	55
	CSDL 1	56
	CSDL 2	56
VII.	Results	60
VIII.	Conclusions	76
IX.	Recommendations	78
Bibliography		79
Appendix A:	CSDL 1 NASTRAN Analysis	80

Contents

		Page
Appendix B:	CSDL 2 NASTRAN Analysis	83
Appendix C:	Main Program Listing	86
Appendix D:	Program Subroutines	112
Appendix E:	Line-of-Sight and Defocus Algorithm	124
Vita		129

List of Figures

Figure		Page
1	CSDL 1 System Model	7
2	CSDL 2 Conceptual Diagram	10
3	CSDL 2 System Model	11
4	CSDL 2 Optical System	13
5	CSDL 2 Support Truss Dimensions	14
6	CSDL 2 Support Structure Nodal Placement	15

List of Tables

Table		Page
I	CSDL Node Coordinates	6
II	Key Results of NASTRAN Eigenvalue Analysis on Nominal CSDL 1 Model	8
III	Initial Conditions Applied to CSDL 1	9
IV	CSDL 2 Node Coordinates	16
V	Lumped Mass Location and Distribution	17
VI	Key Results of NASTRAN Eigenvalue Analysis on Nominal CSDL 1 Model	18
VII	CSDL 2 Sensor/Actuator Locations and Orientations	20
VIII	Spillover Elimination for Decoupling Three Controllers	35
IX	Spillover Elimination for Decoupling Four Controllers	39
X	Relative Angles Between CSDL 1 Modes	57
XI	Relative Angles Between CSDL 2 Modes	58
XII	CSDL 1 Overall Eigenvalue Analysis - 3 Controllers: 8 Modes	62
XIII	Upper and Lower Triangular Transformation Comparison of Controller Eigenvalues	63
XIV	CSDL 1 Overall Eigenvalue Analysis - 3 Controllers: 12 Modes	65
XV	CSDL 1 Overall Eigenvalue Analysis - 4 Controllers: 12 Modes	66
XVI	CSDL 2 Overall Eigenvalue Analysis - 3 Controllers: $q_i = 20$	69
XVII	CSDL 2 Overall Eigenvalue Analysis - 3 Controllers: $q_{rigid} = 2$, $q_{flexible} = 1000$	71
XVIII	CSDL 2 Controller Eigenvalue Analysis - 3 Controllers: $q_{rigid} = 2$, $q_{flexible} = 1000$	73
XIX	CSDL 2 Overall Eigenvalue Analysis - 4 Controllers: $q_{rigid} = 2$, $q_{flexible} = 500$	74

Abstract

Modern optimal control methods are used to develop a multiple input multiple output controller. The controller is then applied to two models. The first model is a lumped mass model of a tetrahedron consisting of four unit masses interconnected by isotropic massless rods. These rods are assumed to be pin-connected and may undergo axial deformation only. The second model is a sophisticated optical space structure more representative of large flexible space structures than the first model. This model consists of fifty-nine nodes and twenty-three lumped masses. The beam elements are fully connected and may support axial, transverse and torsional deformations. NASTRAN is employed to generate modal approximations of both models, as well as the mode shapes and frequencies of the resulting modes. Twelve modes are generated for the first model. Of the numerous modes available for the second model, only the first forty-four modes are addressed, and of these twelve are implemented in the controller.

The control problem is formulated in state vector form and full state feedback is implemented. The state is represented as modal amplitudes and rates and the feedback gains are generated using steady state optimal regulator theory. State estimates are provided by means of a deterministic observer. System outputs are obtained by position sensors and control is applied by point force actuators. The technique by which "spillover" is eliminated is developed using the method of singular value decomposition.

Decentralized control was accomplished using three and four controllers with both models. Conditions for which the stability of each model is assured are developed. Model one is run with three controllers containing the first eight modes to verify system stability. The remaining four modes are added as residuals to the three controllers. Model one was also

run with four controllers containing all twelve system modes. In all cases, closed loop damping of better than ten percent was achieved on all modes with a slight loss in controllability and observability during the spill-over elimination. Model two was then examined using three and four controllers on the twelve selected modes. Full controller decoupling was achieved and stability was maintained for the twelve modes examined. However, the forty-four mode simulation model was not run, therefore, the controller performance could not be verified.

DECENTRALIZED CONTROL OF A LARGE SPACE STRUCTURE AS APPLIED TO THE CSDL 2 MODEL

I. Introduction

With the current success in the Space Transportation System, the near future holds a significant increase in the size of structures that may be employed in space. Projected dimensions for the large space structures range from tens to thousands of meters in size, taking advantage of the low gravity environment to make the systems cost effective. Tubular, lightweight truss members make these structures practical, but also make them very flexible. The increases in size and flexibility lead to an overall increase in the number of low frequency modes that may be contained within the control system bandwidth. Control of such structures then becomes increasingly difficult as the dimensions of the controllers increase. Since active control is performed by on-line computers, larger controller dimensions result in slower control response. To keep the controllers dimensionally realistic, modeling of the satellite and its structural modes becomes a prime concern. A discrete structural analysis of a large space structure may include from one hundred to several hundred of these modes. Unfortunately, the accuracy of the modal information obtained from such an analysis decreases with increasing mode number. Such modeling inaccuracies could result in overall system instability when not properly accounted for.

Of the various control techniques available, modern state-space control theory appears to be best suited for application to large flexible space structures, in light of the problems with off-line computing accuracy and on-line computing speed. These state space controllers make

use of reduced order finite element structural models to minimize computational burdens. This may generate modeling and reduction errors, but allows this method to be easily applied to any of a wide variety of large flexible space structures. As implied earlier, the number of structural modes any single controller can handle is limited by computational considerations, but these limits may be extended by using multiple controllers within the system, each controller performing independently.

Even with an expanded number of controllers, the number of modes that may be controlled is small compared to the number of modes that exist for a given structure. Therefore, the selection of modes to be controlled must be made carefully. Only those modes affecting performance need be controlled. The terms "controlled" and "critical" will be used interchangeably for the modes. The remaining uncontrolled modes fall into three categories: suppressed, residual and unmodeled. Obviously, for a large space structure, the number of structural modes approaches infinity. Natural damping in the structure will normally prevent instabilities arising from the higher frequency modes, so, for model simplicity, these are truncated and left as unmodeled modes. The remaining uncontrolled modes are modeled modes. Of these, some may have destabilizing affects due to spillover and therefore have to be made transparent to the controller. These are called suppressed modes. The last mode group is modeled, uncontrolled and unsuppressed. These are the residual modes and may move freely when control is applied. They may become more stable, less stable or unstable due to control and observation spillover from the critical modes.

It must be remembered that even though specific modes are actively controlled, the residual and unmodeled modes still exist and will contaminate the observation (sensor) data. Therefore, the controlled and uncon-

trolled modes are coupled. Balas (Ref 1) calls this coupling "observation spillover". Likewise, any control applied to the critical modes may excite one or several uncontrolled modes. This form of coupling is referred to as "control spillover", and Balas goes on to state that either or both types of spillover may result in overall instabilities. He proposes a state variable feedback controller which relies on narrow bandpass filters to eliminate observation spillover by filtering out suppressed mode frequencies from controller input data.

Sesak (Ref 2) proposed the use of a singular perturbation technique to develop an appropriate feedback controller and eliminate instabilities due to spillover. Coradetti (Ref 3) later expanded Sesak's approach and concluded that, in the limiting sense with an infinite penalty against any spillover, the singular perturbation technique is equivalent to finding a transformation matrix which, when applied to the feedback gains, will drive the spillover terms to zero. This transformation matrix is determined by performing a singular value decomposition of the control and observation matrices (Ref 4). When the transformation technique is coupled with the modern state-space control technique, an effective method is obtained for eliminating spillover, and works equally well on control and observation spillover. Moreover, even when such spillover is not detrimental to the overall system stability, its elimination can only enhance the system performance.

The intent of this thesis is to apply the aforementioned control techniques in developing a control system consisting of three or more decentralized controllers. This control system will be applied to a lumped mass tetrahedron model generated by the Charles Stark Draper Laboratory, Inc., (CSDL), hereafter called the CSDL 1 model. Calico and Janiszewski (Ref 5) applied the described technique to the CSDL 1 model using a single

controller and eliminating only observation spillover. Later, Calico and Miller (Ref 6) expanded the system to a dual controller, and showed that only observation spillover elimination is not sufficient for higher order controllers. More detailed results are given by Miller (Ref 7) for the dual controller case. Therefore, it has been demonstrated that this technique is appropriate for this model. This present study will use three controllers for this model. System performance will be evaluated by eigenvalue analysis of the closed loop system. Next, the triple controller system will be expanded to accommodate the second CSDL model--a three-mirror, optical space system. Again, an eigenvalue analysis will determine the control system's closed loop performance. Line of sight pointing accuracy and defocus are performance criteria that are mentioned for information, but will not be addressed in this investigation. In applying the control method, for both models, position sensors are used to determine modal amplitudes while point force actuators provide the state variable feedback control.

The following sections will detail both of the CSDL models and their finite element representations. Afterward, the modal control and matrix transformation methods will be discussed. Finally, the computer program implementation and results will be presented.

II. Model Configuration

Illustration and demonstration of controller design methods for large space structures has always been a difficult problem. The very nature of large space structures prevents the development of a simple textbook example. In response to this problem, the Charles Stark Draper Laboratory (CSDL), Inc., of Cambridge, Massachusetts, developed two (paper) models for research. Both models are used in this investigation. Finite element representations of the models are generated by the NASTRAN computer programs. Presentations of the models and their eigenvalue analyses follow.

CSDL 1 Model

The first model used is a lumped mass tetrahedron and is referred to as the CSDL 1 model. This model was selected for its simplicity as well as its similarity to basic large space structures under consideration, from both a structures and a control point of view. The tetrahedral structure is the building block of most large space structure design concepts. It provides a low order model to which control systems may be easily applied due to the small number of modes present. Also, response characteristics exhibited by the model are very similar to those observed in large space structures. This is probably the simplest model available which behaves much like a large space structure.

The finite element model of the structure is depicted in Fig 1. The structure has twelve members joined at ten nodes. The truss members are considered massless and are pin-connected at the nodes, so that only axial forces are exerted (no bending moments). The masses are equal--one unit each--and are located at the first four nodes (the vertices of the tetrahedron proper). Since each mass is assumed to have three translational degrees of freedom, the system has twelve structural modes. The last six

nodes form the ground connections for the three right-angled bipods which support the tetrahedral truss. This ground base provides a reference from which a line of sight may be established. The coordinates for the ten nodes are given in Table I. The reference frame origin for the coordinates is placed directly below the apex in the plane of nodes five through ten. Six pair of collocated force actuators and position sensors are used on this model.

Table I

CSDL 1 Node Coordinates

Node	x	y	z
1	0.0	0.0	10.165
2	-5.0	-2.887	2.0
3	5.0	2.887	2.0
4	0.0	5.7735	2.0
5	-6.0	-1.1547	0.0
6	-4.0	-4.6188	0.0
7	4.0	-4.6188	0.0
8	6.0	-1.1547	0.0
9	2.0	5.7735	0.0
10	-2.0	5.7735	0.0

The key results of an eigenvalue analysis of this model are presented in Table II. Listed are the generalized mass and stiffness and the natural frequencies of each structural mode. The eigenvectors for each mode are presented in Appendix A. This data was obtained from a NASTRAN eigenvalue analysis.

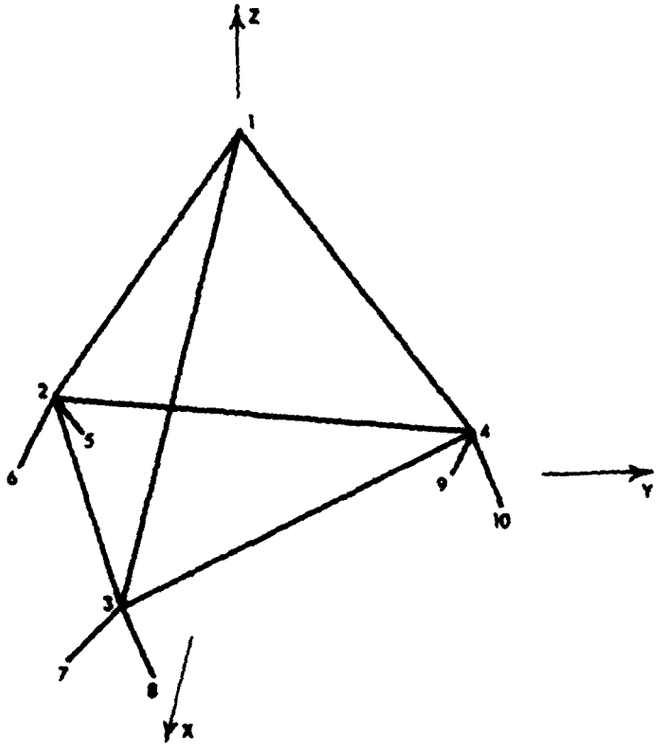

a. 3 Dimensional View

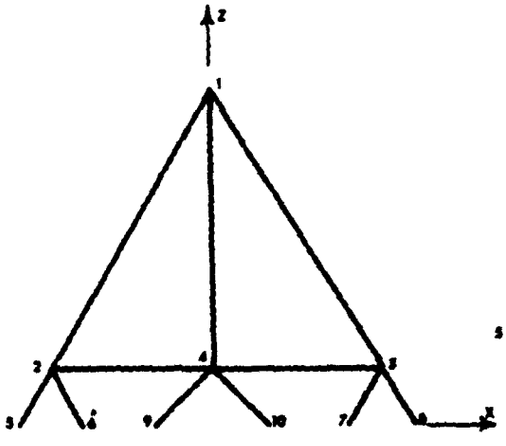

b. Side View

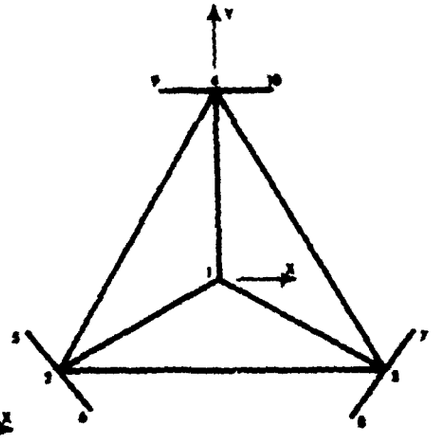

c. Top View

Figure 1. CSDL 1 System Model

Table II

Key Results of NASTRAN Eigenvalue Analysis on CSDL 1 Model

Mode	Generalized Mass	Generalized Stiffness	ω $\frac{rad}{sec}$	Ω $\frac{rad^2}{sec^2}$
1	1.0E+00	1.37E+00	1.17E+00	1.37E+00
2	1.0E+00	2.15E+00	1.47E+00	2.15E+00
3	1.0E+00	8.79E+00	2.97E+00	8.79E+00
4	1.0E+00	1.26E+01	3.56E+00	1.26E+01
5	1.0E+00	1.48E+01	3.85E+00	1.48E+01
6	1.0E+00	2.65E+01	5.15E+00	2.65E+01
7	1.0E+00	3.22E+01	5.68E+00	3.22E+01
8	1.0E+00	3.26E+01	5.71E+00	3.26E+01
9	1.0E+00	7.99E+01	8.94E+00	7.99E+01
10	1.0E+00	1.06E+02	1.01E+01	1.06E+02
11	1.0E+00	1.19E+02	1.09E+01	1.19E+02
12	1.0E+00	1.95E+02	1.40E+01	1.95E+02

Eigenvalue analysis of the modal movements will give an indication of the performance of the system control. Line of sight, based on the x-y motion of mode one, is an important performance parameter. Initial conditions may be applied to the model to develop a time history of the system response. The initial conditions for this model are listed in Table III. As a first cut on the three controller design, the line of sight pointing performance will not be addressed in this investigation. Nevertheless, the development of the error terms to which the initial conditions are applied will be explained along with the system equations of motion.

Table III

Initial Conditions Applied to CSDL 1

Mode	Displacement (η)	Velocity ($\dot{\eta}$)
1	-.001	-.003
2	0.006	0.010
3	0.001	0.030
4	-.009	-.020
5	0.008	0.020
6	-.001	-.020
7	-.002	-.003
8	0.002	0.004
9	0.000	0.000
10	0.000	0.000
11	0.000	0.000
12	0.000	0.000

CSDL 2 Model

The second model under consideration is a "generic" optical space structure which has a behavior much closer to that of a large space structure than the first discussed. This model is referred to as CSDL 2. Figure 2 shows a conceptual view of the structure and Fig 3 is a finite element representation of the model.

CSDL 2 is a non-trivial model representing a wide-angle, three-mirror, optical space system The two major components of the system are the optical support struct and the equipment section. The optical support structure consists of the upper mirror support truss, the lower mirror support trus, and the metering truss. The upper mirror support truss contains the primary mirror (convex shaped) and the tertiary mirror (concave shaped). The lower mirror support truss contains the secondary mirror (flat) and the focal plane (image receiving device). The metering truss maintains the mirror separation and is the key section when examining defocus. The opti-

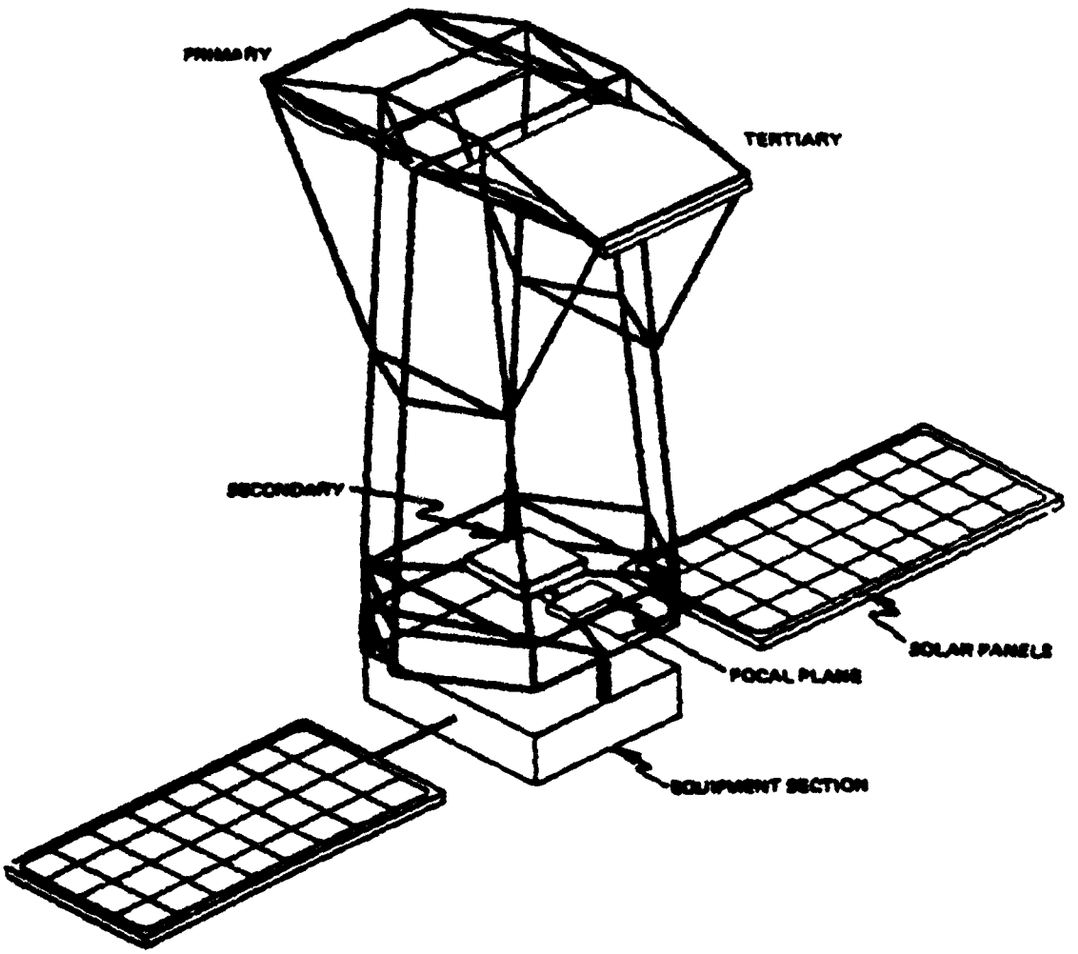

Figure 2. CSDL Conceptual Diagram

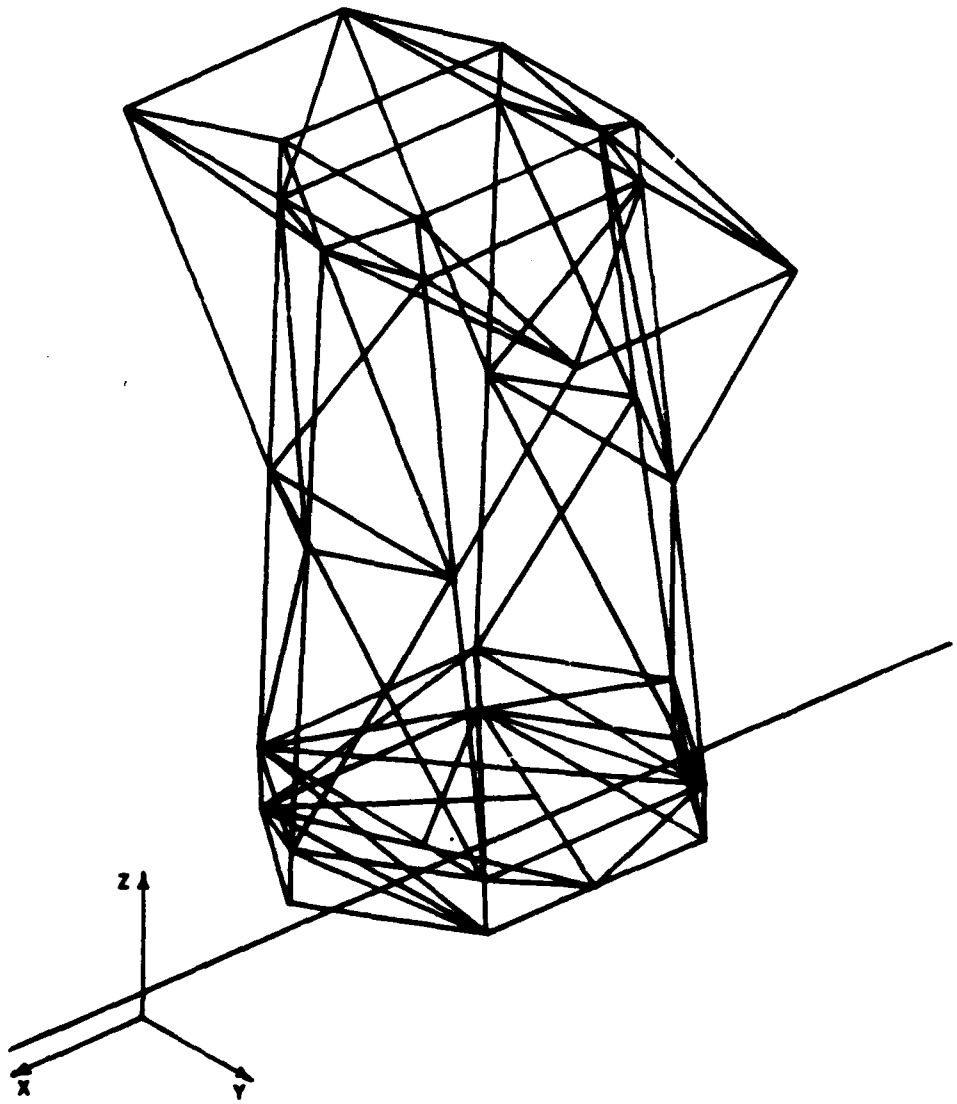

Figure 3. CSDL System Model

cal support structure and mirror placement are shown in Figure 4. Attached to the lower side of the lower mirror support truss is the equipment section which consists of the control package, modeled as a rigid body, with two cantilevered flexible solar panels. The full structure is approximately twenty-eight meters high and has a mass of 9300 kilograms. The structural dimensions are shown in Figure 5.

The finite element model of the structure contains fifty-nine node points, but the actual structure has only fifty-one nodes. The extra nodes were added to provide more detail in the modeling of the mirrors and equipment section (Ref 8). The coordinates of the nodes are given in Table IV, and the placement of the nodes in the support structure are shown in Fig 6. Unlike the first model, the truss members are fully joined so that bending and torsion are allowed. The truss elements are made of graphite-epoxy and assumed to be massless. The system mass is lumped at twenty-three nodes and distributed as shown in Table V. The largest mass is located in the equipment package, as would be expected.

The key results of an eigenvalue analysis performed on this model are listed in Table VI. The generalized mass and stiffness, as well as the natural frequency of the first forty-four structural modes is given. Of the modes listed, those with an asterisk were used in this study. The associated eigenvectors for each mode are presented in Appendix B. Again, this data is obtained via the NASTRAN computer program.

This model makes use of twenty-one pairs of collocated force actuators and position sensors. A list of sensor/actuator locations and orientations is provided in Table VII.

As in the CSDL I model, eigenvalue analyses will provide control performance information. Line-of-sight performance, as well as defocus along

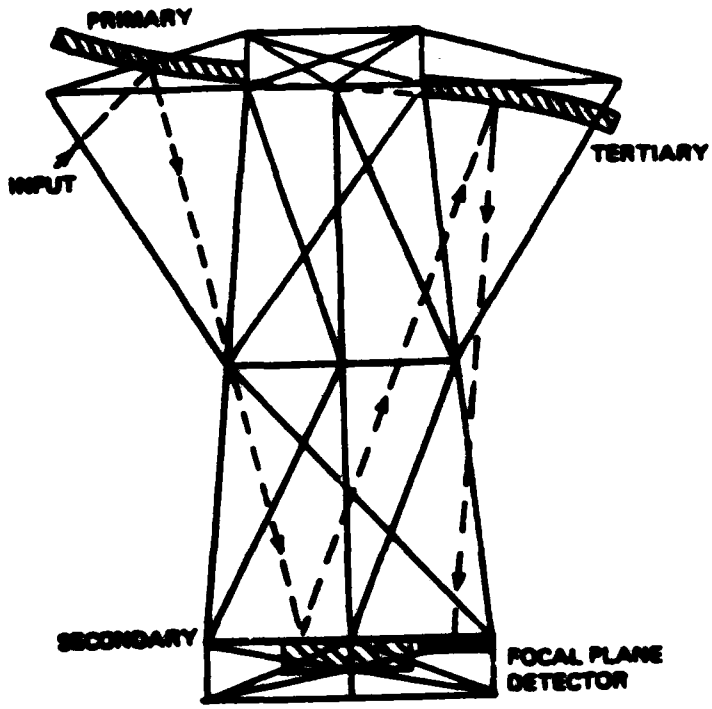

Figure 4. CSDL 2 Optical System

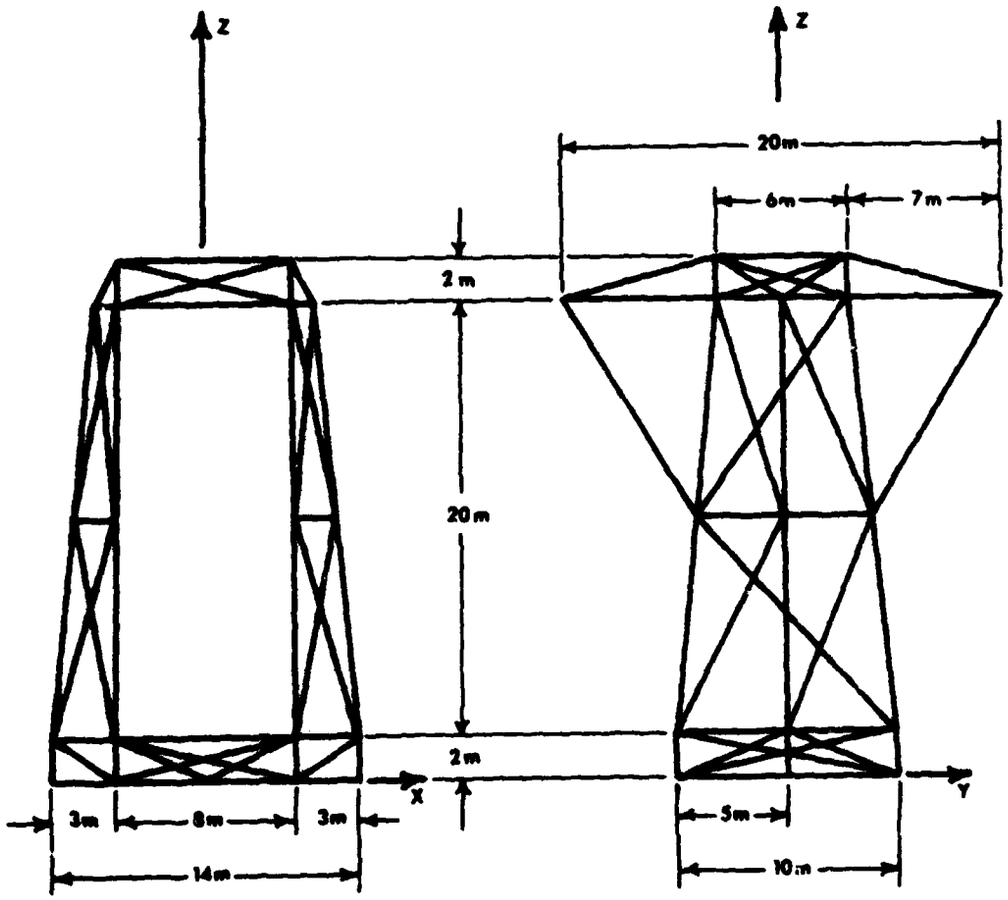

Figure 5. CSDL 2 Support Truss Dimensions

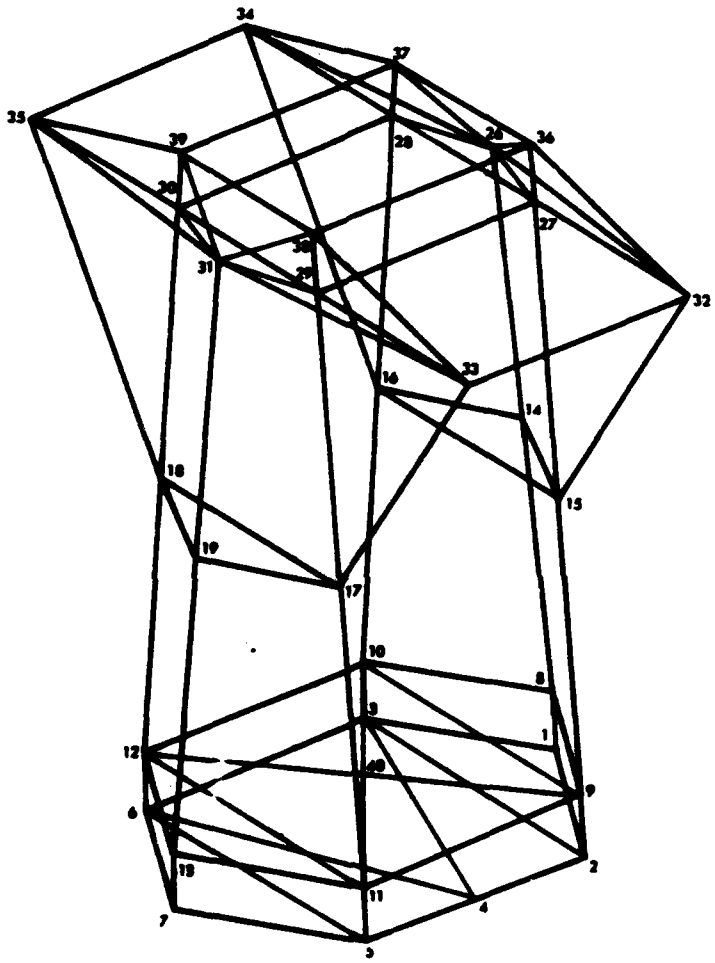

Figure 6. CSDL 2 Support Structure Nodal Placement

Table IV

CSDL 2 Node Coordinates

Node	X(m)	Y(m)	Z(m)	Node	X(m)	Y(m)	Z(m)
1	-7.0	0.0	0.0	37	-4.0	-3.0	24.0
2	-4.0	5.0	0.0	38	4.0	3.0	24.0
3	-4.0	-5.0	0.0	39	4.0	-3.0	24.0
4	0.0	5.0	0.0	40	0.0	2.5	2.0
5	4.0	5.0	0.0	42	0.0	5.0	-0.3
6	4.0	-5.0	0.0	43	-2.0	0.0	-1.3
7	7.0	0.0	0.0	44	0.0	-1.7	-1.3
8	-7.0	0.0	2.0	45	2.0	0.0	-1.3
9	-4.0	5.0	2.0	46	-4.0	-5.0	-0.3
10	-4.0	-5.0	2.0	47	4.0	-5.0	-0.3
11	4.0	5.0	2.0	48	-26.0	0.0	-1.3
12	4.0	-5.0	2.0	49	-21.0	0.0	-1.3
13	7.0	0.0	2.0	50	-16.0	0.0	-1.3
14	-6.0	0.0	12.0	51	-11.0	0.0	-1.3
15	-4.0	4.0	12.0	52	-6.0	0.0	-1.3
16	-4.0	-4.0	12.0	53	6.0	0.0	-1.3
17	4.0	4.0	12.0	54	11.0	0.0	-1.3
18	4.0	-4.0	12.0	55	16.0	0.0	-1.3
19	6.0	0.0	12.0	56	21.0	0.0	-1.3
26	-5.0	0.0	22.0	57	26.0	0.0	-1.3
27	-4.0	3.0	22.0	100	0.0	0.0	0.0
28	-4.0	-3.0	22.0	910	-4.0	-2.5	2.0
29	4.0	3.0	22.0	1001	0.0	-6.5	22.0
30	4.0	-3.0	22.0	1002	0.0	0.0	2.0
31	5.0	0.0	22.0	1003	0.0	6.5	22.0
32	-4.0	10.0	22.0	1004	0.0	4.0	2.0
33	4.0	10.0	22.0	1112	4.0	-2.5	2.0
34	-4.0	-10.0	22.0	2830	0.0	-3.0	22.0
35	4.0	-10.0	22.0	3233	0.0	10.0	22.0
36	-4.0	3.0	24.0				

Table V

CSDL 2 Lumped Mass Distribution

Node	Mass (kg)	Node	Mass (kg)
9	67.4	52	73.8
10	67.4	53	73.8
11	67.4	55	163.8
12	67.4	57	81.9
27	69.5	1001	1000
28	6.74	1002	800
29	69.5	1003	1200
30	6.74	1004	600
32	6.74		
33	6.74		
34	69.5		
35	69.5		
44	3500		
48	81.9		
50	1.638		

Table VI

Key Results of NASTRAN Eigenvalue Analysis on Nominal CSDL 2 Model

Mode	Generalized Mass	Generalized Stiffness	ω rad/sec	Ω^2 rad^2/sec^2
1-6*	1.00E+00	0.0	0.0	0.0
7*	1.00E+00	5.128E-01	7.161E-01	5.128E-01
8	1.00E+00	8.521E-01	9.231E-01	8.521E-01
9	1.00E+00	8.835E-01	9.399E-01	8.835E-01
10	1.00E+00	1.212E+00	1.101E+00	1.212E+00
11	1.00E+00	8.189E+00	2.862E+00	8.189E+00
12*	1.00E+00	1.266E+01	3.502E+00	1.226E+01
13*	1.00E+00	1.403E+01	3.746E+00	1.403E+01
14	1.00E+00	1.492E+01	3.863E+00	1.492E+01
15	1.00E+00	1.599E+01	3.998E+00	1.599E+01
16	1.00E+00	1.625E+01	4.032E+00	1.625E+01
17*	1.00E+00	2.623E+01	5.122E+00	2.623E+01
18	1.00E+00	2.630E+01	5.128E+00	2.630E+01
19	1.00E+00	2.677E+01	5.174E+00	2.677E+01
20	1.00E+00	3.310E+01	5.753E+00	3.310E+01
21*	1.00E+00	3.730E+01	6.197E+00	3.730E+01
22*	1.00E+00	5.301E+01	7.281E+00	5.301E+01
23	1.00E+00	9.498E+01	9.746E+00	9.498E+01
24*	1.00E+00	1.241E+02	1.114E+01	1.241E+02
25	1.00E+00	1.999E+02	1.414E+01	1.999E+02
26	1.00E+00	2.001E+02	1.416E+01	2.001E+02
27	1.00E+00	4.654E+02	2.157E+01	4.654E+02
28*	1.00E+00	4.705E+02	2.169E+01	4.705E+02
29	1.00E+00	6.182E+02	2.468E+01	6.182E+02
30*	1.00E+00	6.275E+02	2.505E+01	6.275E+02
31	1.00E+00	6.481E+02	2.546E+01	6.481E+02
32	1.00E+00	7.428E+02	2.725E+01	7.428E+02
33	1.00E+00	1.700E+03	4.123E+01	1.700E+03
34	1.00E+00	2.568E+03	5.067E+01	2.568E+03
35	1.00E+00	2.821E+03	5.311E+01	2.821E+03
36	1.00E+00	3.095E+03	5.563E+01	3.095E+03

Table VI, continued

Key Results of NASTRAN Eigenvalue Analysis on Nominal CSDL 2 Model

Mode	Generalized Mass	Generalized Stiffness	ω $\frac{rad}{sec}$	Ω $\frac{rad^2}{sec^2}$
37	1.00E+00	3.205E+03	5.661E+01	3.205E+03
38	1.00E+00	4.221E+03	6.497E+01	4.221E+03
39	1.00E+00	4.380E+03	6.618E+01	4.380E+03
40	1.00E+00	5.266E+03	7.257E+01	5.266E+03
41	1.00E+00	5.358E+03	7.320E+01	5.358E+03
42	1.00E+00	5.360E+03	7.321E+01	5.360E+03
43	1.00E+00	5.361E+03	7.322E+01	5.361E+03
44	1.00E+00	5.368E+03	7.327E+01	5.368E+03

*denotes modes actively controlled in this study. Of the rigid body modes, only 4, 5, and 6 were controlled.

Table VII

CSDL 2 Sensor/Actuator Locations and Orientations

Pair	Node	x	y	z	
1	9	0	1	0	(in
2	9	0	0	1	direction
3	10	0	0	1	cosines)
4	11	1	0	0	
5	11	0	1	0	
6	11	0	0	1	
7	12	0	0	1	
8	27	1	0	0	
9	27	0	1	0	
10	27	0	0	1	
11	28	0	0	1	
12	29	0	1	0	
13	29	0	0	1	
14	30	0	0	1	
15	32	0	0	1	
16	33	0	0	1	
17	34	1	0	0	
18	34	0	1	0	
19	34	0	0	1	
20	35	0	1	0	
21	35	0	0	1	

the z-axis, are important analysis factors, but as a first cut, will not be directly addressed in this investigation. Instead, the eigenvalue analysis will provide information on controller maintenance of modal stability and on controller independence (decoupling).

The controller development on which this study is based will now be presented.

III. System Model

Equations of Motion

As presented by Calico and Miller (Refs 6 and 7), the system model may be developed from the vibrational equations of motion for a large space structure given generally as

$$M\ddot{\bar{g}} + E\dot{\bar{g}} + K\bar{g} = D\bar{u} \tag{1}$$

where

M = nxn symmetric mass matrix

E = nxn symmetric damping matrix

K = nxn symmetric stiffness matrix

D = nxm matrix of nodal, attitude-evaluated actuator locations

$\bar{g}$ = nx1 generalized coordinate vector

$\bar{u}$ = mx1 control input vector

Introducing the nxn modal matrix ϕ for Eq 1, such that

$$\bar{g} = \phi\,\bar{\eta} \tag{2}$$

where $\bar{\eta}$ is the n-vector of modal coordinates, Eq 1 may be written as

$$\begin{bmatrix} \diagdown & & \\ & I & \\ & & \diagdown \end{bmatrix} \ddot{\bar{\eta}} + \begin{bmatrix} \diagdown & & \\ & 2\zeta\omega & \\ & & \diagdown \end{bmatrix} \dot{\bar{\eta}} + \begin{bmatrix} \diagdown & & \\ & \omega^2 & \\ & & \diagdown \end{bmatrix} \bar{\eta} = \phi^T D\bar{u} \tag{3}$$

the ω_i and ζ_i terms being natural frequencies and damping coefficients, respectively, of the specific modes. The properties of the modal matrix ϕ are such that the coefficients of Eq 3 are given by

$$\begin{aligned} \begin{bmatrix} \diagdown & & \\ & I & \\ & & \diagdown \end{bmatrix} &= \phi^T M \phi \\ \begin{bmatrix} \diagdown & & \\ & 2\zeta\omega & \\ & & \diagdown \end{bmatrix} &= \phi^T E \phi \\ \begin{bmatrix} \diagdown & & \\ & \omega^2 & \\ & & \diagdown \end{bmatrix} &= \phi^T K \phi \end{aligned} \tag{4}$$

where

$$\begin{bmatrix} \ddots & & \\ & I & \\ & & \ddots \end{bmatrix} = \text{nxn identity matrix}$$

$$\begin{bmatrix} \ddots & & \\ & 2\zeta\omega & \\ & & \ddots \end{bmatrix} = \text{nxn diagonal damping matrix}$$

$$\begin{bmatrix} \ddots & & \\ & \omega^2 & \\ & & \ddots \end{bmatrix} = \text{nxn diagonal matrix of eigenvalues of Eq 1}$$

Equation 3 may now be converted into a state space representation of the system, given by

$$\dot{\bar{x}} = A\bar{x} + B\bar{u} \tag{5}$$

in which

A = nxn plant matrix

B = nxm input matrix

$\bar{x}$ = nx1 state vector

$\bar{u}$ = mx1 control input vector

These system parameters are of the form:

$$A = \left[\begin{array}{c:c} 0 & I \\ \hdashline \begin{bmatrix} \ddots & & \\ & -\omega^2 & \\ & & \ddots \end{bmatrix} & \begin{bmatrix} \ddots & & \\ & -2\zeta\omega & \\ & & \ddots \end{bmatrix} \end{array}\right]$$

$$B = \begin{bmatrix} 0 \\ \cdots \\ \phi^T D \end{bmatrix} \tag{6}$$

$$\bar{x} = \begin{Bmatrix} \bar{\eta} \\ \dot{\bar{\eta}} \end{Bmatrix}$$

The complete state, however, is normally not available, so Eq 5 must be supplemented by an output equation. State space form gives the sensor output as

$$\bar{y} = C_p\bar{q} + C_v\dot{\bar{q}} \tag{7}$$

when both position (p subscript) and velocity (v subscript) sensors are used. Expressing this in state vector $\bar{x}$:

$$\bar{y} = C\bar{x} \tag{8}$$

where

$$C = \left[C_p\phi \;\vdots\; C_v\phi \right] \tag{9}$$

Equations 5 and 8 form the large space structure model available to the control designer. These equations will be further explained so they will hold more significance when being applied to modal control of flexible structures.

Control Model

The full structural model is represented by the 2n-dimensional state vector $\bar{x}$. As noted earlier, it is impossible to model all of the possible modes for a complex structure, and of those modeled, even fewer will be actively controlled. Assuming that multiple controllers are available, each controlling a small subset n_i of nodes, as in this investigation, the state vector may be simply represented by

$$\bar{x} = \left\{ \bar{x}_1^T, \bar{x}_2^T, \ldots\ldots, \bar{x}_N^T, \bar{x}_r^T, \bar{x}_{um}^T \right\}^T \tag{10}$$

The x_i terms represent $2n_i$-vectors of modal amplitudes and velocities as defined by the last of Eq 6 controlled by the i th controller of N controllers present. The $\bar{x}_r$ represents a $2n_r$-vector of residual modes and the the $\bar{x}_{um}$ represents a $2n_{um}$-vector of unmodeled modes.

As defined earlier, the unmodeled modes are those which exist but are beyond the number of modes in the structural model. These will no longer appear in the derivations. The residual modes are those which are modeled

but not controlled. The controlled modes are those which require active control in order to obtain satisfactory system response. The selection of the modes to be controlled and their assignment to one of the N controllers is left to the control designer.

It should be noted at this point that suppressed modes were not directly referred to above even though they were defined earlier in the text. They have not been ignored, in fact they are included within the controlled modes, in the following manner: In a multiple controller design, the individual controller actively controls those modes assigned to it and "ignores" the residual modes defined above. But the modes assigned to the other controllers still interact with this individual controller, causing control and/or observation spillover. In the process of controlling the system, each controller contributes to the elimination of observation and control spillover in the system. Thus, each controller, in effect "suppresses" the modes contained in the other controllers. In other words, the controlled modes of one controller are the suppressed modes of another controller. Therefore, the suppressed modes are contained implicitly within the controlled modes. So, like the unmodeled modes, the suppressed modes exist in the system, but will not be mentioned any longer in the derivations since they are included implicitly in the controlled modes.

Continuing with the derivation, the notation of Eq 10 may be used to express the state equations as follows

$$\dot{\bar{x}}_i = A_i\bar{x}_i + B_i\bar{u} \qquad i = 1, 2, \ldots\ldots, N \tag{11}$$

$$\dot{\bar{x}}_r = A_r\bar{x}_r + B_r\bar{u} \tag{12}$$

$$\bar{y} = \sum_{i=1}^{N} C_i \bar{x}_i + C_r \bar{x}_r \tag{13}$$

where the A, B and C matrices are

$$A_j = \left[\begin{array}{c:c} 0 & I \\ \hdashline \left[-\omega_j^2\right] & \left[-2\zeta\omega_j\right] \end{array}\right] \qquad j = 1, 2, \ldots, N, r \tag{14}$$

$$B_j = \begin{bmatrix} 0 \\ \cdots \\ \phi^T D_j \end{bmatrix} \qquad j = 1,2, \ldots, N, r \tag{15}$$

$$C_j = \left[\begin{array}{c:c} C_{pj}\,\phi & C_{vj}\,\phi \end{array}\right] \qquad j = 1, 2, \ldots, N, r \tag{16}$$

Moreover, the lower partition of Eq 15, the $\phi^T D_i$ and $\phi^T D_r$ matrices, are of the form

$$\phi^T D_i = \Psi_i \tag{17}$$

$$\phi^T D_r = \Psi_r \tag{18}$$

where

$$(\Psi_i)_{jk} = \bar{\phi}_j \cdot \bar{d}_{ik} \tag{19}$$

$$(\Psi_r)_{jk} = \bar{\phi}_j \cdot \bar{d}_{rk} \tag{20}$$

The ϕ_j are the column vectors of the matrix ϕ and the d_{ik} and d_{rk} are the column vectors of the D_i and D_r matrices, respectively. Using the forms given in Eqs 17 to 20, the $\phi^T D_i$ and $\phi^T D_r$ matrices may be represented as

$$\Psi_i = \begin{bmatrix} (\psi_i)_{11} & (\psi_i)_{12} & \cdots & (\psi_i)_{1\,n_a} \\ (\psi_i)_{21} & (\psi_i)_{22} & & (\psi_i)_{2\,n_a} \\ \vdots & & & \vdots \\ (\psi_i)_{n_i 1} & (\psi_i)_{n_i 2} & \cdots & (\psi_i)_{n_i n_a} \end{bmatrix} \tag{21}$$

$$\Psi_r = \begin{bmatrix} (\psi_r)_{11} & (\psi_r)_{12} & \cdots & (\psi_r)_{1\,n_a} \\ (\psi_r)_{21} & (\psi_r)_{22} & & (\psi_r)_{2\,n_a} \\ \vdots & & & \vdots \\ (\psi_r)_{n_r 1} & (\psi_r)_{n_r 2} & \cdots & (\psi_r)_{n_r n_a} \end{bmatrix} \tag{22}$$

where n_i is the number of modes in the i th controller, n_r is the number of residual modes, and n_a is the number of actuators employed. This allows Eq 15 to be rewritten as

$$B_j = \begin{bmatrix} 0 \\ \cdots \\ \Psi_j \end{bmatrix} \qquad j = 1, 2, \ldots, N, r \tag{23}$$

In simpler terms, the rows of the ψ_j matrices represent the amplitude of each structural mode along the line of action of each actuator location.

The dimension of the ψ_j matrices is $n_j \times n_a$ making the dimension of the B_j matrices $2n_j \times n_a$ when the upper null partition is included. Likewide it can be seen that the $C_{pj}\phi$ and $C_{vj}\phi$ partitions of Eq 16 are of dimension $n_s \times n_j$ where n_s is the number of sensors employed. This makes the dimension of the C_j matrices $n_s \times 2n_j$.

Examining the C_j matrix more closely, the C_{pj} and C_{vj} terms are the position and velocity coefficient matrices, respectively, of the sensors employed, assuming that both position and velocity sensors are used. However, in this study, only position sensors are used. This makes the C_{vj} into zero matrices so that Eq 16 now becomes

$$C_j = \left[C_{pj}\,\phi \;\vdots\; 0 \right] \qquad j = 1, 2, \ldots, N, r \tag{24}$$

Furthermore, when collocated sensor/actuators are employed with the same alignment, this simplifies even more. In this special case

$$\left[C_{pj}\phi \right] = \left[\phi^T D_j \right]^T \tag{25}$$

$$\left[C_{pj}\phi \right] = \left[\Psi_j^T \right] \tag{26}$$

so that

$$C_j = \left[\Psi_j^T \;\vdots\; 0 \right] \qquad j = 1, 2, \ldots, N, r \tag{27}$$

This simplicity is the prime advantage of using position sensors only. As was pointed out in the B_j matrix, the columns of the Ψ_j^T matrix in C_j represent the amplitudes of each structural mode at each sensor location along the line of the sensor.

The equations thus derived are very general in form and are independent of structural complexity. Only the matrix dimensions will vary depending on the number of sensors, actuators and modes studied. This general development can lead one to understand the wide variety of structures to which the following analysis may be applied.

Modal Control

The controller design for N controllers will be based upon the model given by Eqs 11 and 13 which, restated, are

$$\dot{\bar{x}}_i = A_i\,\bar{x}_i + B_i\,\bar{u} \tag{11}$$

$$\bar{y} = \sum_{i=1}^{N} C_i\bar{x}_i + C_r\bar{x}_r \tag{13}$$

The state feedback control desired is of the form

$$\bar{u} = \sum_{i=1}^{N} G_i\,\bar{x}_i \tag{28}$$

where G_i are the control gain matrices. The development of the G_i matrices

will be presented shortly.

To form this active control $\bar{u}$, complete knowledge of the state vector is needed. Unfortunately, direct measurement of the entire state vector is impossible and the only measure of $\bar{x}$ is the measurement $\bar{y}$ given by the sensors. As a result, it is necessary to develop a state estimator which can take the observations $\bar{y}$ and produce an estimate of $\bar{x}$. This can be done by employing an observer of the form

$$\dot{\hat{x}}_i = A_i\hat{x}_i + B_i\bar{u} + K_i(\bar{y} - \hat{y}_i) \tag{29}$$

$$\hat{y}_i = C_i\hat{x}_i \tag{30}$$

where $\hat{x}_i$ are the estimated states, $\hat{y}_i$ are the estimated outputs and K_i are the observer gain matrices. The K_i matrices are chosen such that the error in the state estimate

$$\bar{e}_i = \hat{x}_i - \bar{x}_i \tag{31}$$

is asymptotically stable. Now, the control vector, in terms of the estimated state is given by

$$\bar{u} = \sum_{i=1}^{N} G_i \hat{x}_i \tag{32}$$

Equations 11, 13, 29, 30 and 32 represent the control problem for a large space structure.

Before proceeding any further, time will be taken now to develop the control gain matrices G_i and observer gain matrices K_i. For this, linear optimal regulator theory (Ref 9) is used. The control gain matrix G is derived first, starting by defining a quadratic performance index J such that

$$J = \tfrac{1}{2}\int_0^\infty (\bar{x}_i^T Q_i\bar{x}_i + \bar{u}^T R_i\bar{u})\, dt \tag{33}$$

where

Q is an n x n positive semidefinite weighting matrix

R is an m x m positive definite weighting matrix

It is desired to minimize this index subject to Eq 11. Then, the optimal solution to the minimization problem is

$$G_i = -R_i^{-1} B_i^T S_i \tag{34}$$

where S_i is the solution to the steady state matrix Riccati equation:

$$S_i A_i + A_i^T S_i - S_i B_i R_i^{-1} B_i^T S_i + Q_i = 0 \tag{35}$$

Realizing that the eigenvalues of the matrix $(A_i - K_i C_i)$ are the same as the eigenvalues of its transpose $(A_i^T - C_i^T K_i^T)$, a similar development may be used for the observer gain matrices K_i. An equation for the system similar to Eq 11 can be written using the state $\bar{w}$:

$$\dot{\bar{w}}_i = A_i^T \bar{w}_i - C_i^T \bar{g}_i \tag{36}$$

where the $\bar{g}$ is the control input given by

$$\bar{g}_i = K_i^T \bar{w}_i \tag{37}$$

Again, using linear optimal regulator theory, a quadratic performance index is defined:

$$J = \tfrac{1}{2} \int_0^\infty (\bar{w}_i^T Q_{obi} \bar{w}_i + \bar{g}_i^T R_{obi} \bar{g}_i)\, dt \tag{38}$$

where Q_{ob} and R_{ob} are weighting matrices as defined for Eq 33, but are not necessarily the same exact matrices for the G_i matrices. It may be desirable to weight the observation data more or less than the control feedback.

Continuing, Eq 38 is minimized subject to Eq 36 and the observation gain matrix is given by

$$K_i = +R_{obi}^{-1} C_i P_i \tag{39}$$

where P_i is the solution to the steady state matrix Riccati equation:

$$P_i A_i^T + A_i P_i - P_i C_i^T R_{obi}^{-1} C_i P_i + Q_{obi} = 0 \tag{40}$$

It may be noted that Eq 40 is, in effect, the transpose of Eq 35, which follows since the observation gain matrix is developed from the transpose of the system matrix $(A_i - K_i C_i)$.

Equations 34 and 39 now form the control gains G_i and observation estimator gains K_i to be used in their respective controllers, and are determined such that each controller is stable. However, due to coupling these controllers and observers are not independent. Therefore, even though the G_i and K_i matrices keep their individual controllers stable, the overall system may be unstable.

This system instability, even with stable controllers, can be seen in the following development. To begin, an N-controller system will be illustrated. Then a three- and four-controller system will be shown. It will become obvious that controller stability alone will not guarantee overall system stability. The one- and two-controller systems were demonstrated by Miller, and he proceeded as far as deriving the three controller case.

N Controller

For a multiple input multiple out controller, the state equations are given by Eq 11 as

$$\dot{\bar{x}}_i = A_i \bar{x}_i + B_i \bar{u} \qquad i = 1, 2, \ldots, N \tag{41}$$

but for reasons stated earlier, an observer of the form given by Eqs 29 and 30 is used

$$\dot{\hat{x}}_i = A_i \hat{x}_i + B_i \bar{u} + K_i(\bar{y} - \hat{y}_i) \qquad i = 1, 2, \ldots, N \tag{42}$$

$$\hat{y}_i = C_i \hat{x}_i \qquad i = 1, 2, \ldots, N \tag{43}$$

where the subscript i denotes the i th controller, $\hat{x}_i$ the estimated state vectors and $\hat{y}_i$ the estimated output vectors.

The observation gain matrices K_i are chosen such that the state estimate errors

$$\bar{e}_i = \hat{x}_i - \bar{x}_i \qquad i = 1, 2, \ldots, N \tag{44}$$

approach zero for large time. The control is then given by

$$\bar{u} = \sum_{i=1}^{N} G_i \hat{x}_i \tag{45}$$

Equations 42, 43, and 44 may then be combined with the state equation given in Eq 41 to obtain the state estimate errors:

$$\dot{\bar{e}}_i = \dot{\hat{x}}_i - \dot{\bar{x}}_i = (A_i - K_i C_i)\bar{e}_i + \sum_{\substack{j=1 \\ j \neq i}}^{r} K_i C_j \bar{x}_j \qquad \begin{array}{l} i = 1, 2, \ldots, N \\ j = 1, 2, \ldots, N, r \end{array} \tag{46}$$

Now, using the state equations given in Eq 41, along with the control stated in Eq 45 above, the controlled state equations are given by

$$\dot{\bar{x}}_i = (A_i + B_i G_i)\bar{x}_i + B_i G_i \bar{e}_i + \sum_{\substack{j=1 \\ j \neq i}}^{N} B_i G_j \bar{x}_j \qquad i = 1, 2, \ldots, N \tag{47}$$

The states $\bar{x}_i$ and errors in the states $\bar{e}_i$ may be collectively evaluated by the controlled system state presented as an augmented state vector of Eqs 46 and 47. This vector $\bar{z}$ is given by

$$\bar{z} = \left\{ \bar{x}_1^T, \bar{e}_1^T, \bar{x}_2^T, \bar{e}_2^T, \ldots\ldots, \bar{x}_N^T, \bar{e}_N^T, \bar{x}_r^T \right\}^T \tag{48}$$

Writing out the closed loop state equations, in terms of $\bar{z}$, gives

$$\dot{\bar{z}} = \begin{bmatrix} A_1 + B_1G_1 & B_1G_1 & --- & B_1G_i & B_1G_i & --- & B_1G_n & B_1G_n & 0 \\ 0 & A_1-K_1C_1 & --- & K_1C_i & 0 & --- & K_1C_n & 0 & K_1C_r \\ \vdots & \vdots & & \vdots & \vdots & & \vdots & \vdots & \vdots \\ \vdots & \vdots & & \vdots & \vdots & & \vdots & \vdots & \vdots \\ B_iG_1 & B_iG_1 & --- & A_i+B_iG_i & B_iG_i & --- & B_iG_n & K_iC_r & 0 \\ K_iC_1 & 0 & --- & 0 & A_i-K_iC_i & --- & K_iC_n & 0 & 0 \\ \vdots & \vdots & & \vdots & \vdots & & \vdots & \vdots & \vdots \\ \vdots & \vdots & & \vdots & \vdots & & \vdots & \vdots & \vdots \\ B_nG_1 & B_nG_1 & --- & B_nG_i & B_nG_i & --- & A_n+B_nG_n & B_nG_n & 0 \\ K_nC_1 & 0 & --- & K_nG_i & 0 & --- & 0 & A_n-K_nC_n & K_nC_r \\ B_rG_1 & B_rG_1 & --- & B_rG_i & B_rG_i & --- & B_rG_n & B_rG_n & A_r \end{bmatrix} \bar{z} \tag{49}$$

The system matrix may be either upper or lower block triangularized. For upper block triangular form, the spillover elimination required is

$$B_iG_j = 0$$

and $$j = 1, 2, \ldots, N-1;\ i = j + 1, \ldots, N \tag{50}$$

$$K_iC_j = 0$$

and for lower block triangular form

$$B_iG_j = 0$$

and $$i = 1, 2, \ldots, N-1;\ j = i + 1, \ldots, N \tag{51}$$

$$K_iC_j = 0$$

The block structure of Eq 49 can be more easily seen in specific example, therefore the three and four controller cases will now be examined.

<u>Three Controllers</u>

Setting N = 3 and following the form given in the previous development

for N controllers, the state equations for a three controller system are given as

$$\dot{\bar{x}}_1 = A_1\bar{x}_1 + B_1\bar{u} \tag{52}$$

$$\dot{\bar{x}}_2 = A_2\bar{x}_2 + B_2\bar{u} \tag{53}$$

$$\dot{\bar{x}}_3 = A_3\bar{x}_3 + B_3\bar{u} \tag{54}$$

where the subscripts designate the controller described by the equation. The observer to be used is

$$\dot{\hat{x}}_i = A_i\hat{x}_i + B_i\bar{u} + K_i(\bar{y} - \hat{y}_i) \qquad i = 1,2,3 \tag{55}$$

$$\hat{y}_i = C_i\hat{x}_i \qquad i = 1, 2, 3 \tag{56}$$

Again, the observer gain matrices K_i are chosen such that the error in the state estimates

$$\bar{e}_i = \hat{x}_i - \bar{x}_i \qquad i = 1, 2, 3 \tag{57}$$

are asymptotically stable. And now the control applied is given by

$$\bar{u} = G_1\hat{x}_1 + G_2\hat{x}_2 + G_3\hat{x}_3 \tag{58}$$

Using Eqs 52 through 57, the system's state estimate errors may be shown as described in Eq 46 for N = 3:

$$\dot{\bar{e}}_1 = \dot{\hat{x}}_1 - \dot{\bar{x}}_1 = (A_1-K_1C_1)\bar{e}_1 + K_1C_2\bar{x}_2 + K_1C_3\bar{x}_3 + K_1C_r\bar{x}_r \tag{59}$$

$$\dot{\bar{e}}_2 = \dot{\hat{x}}_2 - \dot{\bar{x}}_2 = (A_2-K_2C_2)\bar{e}_2 + K_2C_1\bar{x}_1 + K_2C_3\bar{x}_3 + K_2C_r\bar{x}_r \tag{60}$$

$$\dot{\bar{e}}_3 = \dot{\hat{x}}_3 - \dot{\bar{x}}_3 = (A_3-K_3C_3)\bar{e}_3 + K_3C_1\bar{x}_1 + K_3C_2\bar{x}_2 + K_3C_r\bar{x}_r \tag{61}$$

Combining the state equations and the control given in Eq 58, the states may now be described, as given in Eq 47 by

$$\dot{\bar{x}}_1 = (A_1 + B_1G_1)\bar{x}_1 + B_1G_1\bar{e}_1 + B_1G_2\bar{x}_2 + B_1G_3\bar{x}_3 \tag{62}$$

$$\dot{\bar{x}}_2 = (A_2 + B_2G_2)\bar{x}_2 + B_2G_2\bar{e}_2 + B_2G_1\bar{x}_1 + B_2G_3\bar{x}_3 \tag{63}$$

$$\dot{\bar{x}}_3 = (A_3 + B_3G_3)\bar{x}_3 + B_3G_3\bar{e}_3 + B_3G_1\bar{x}_1 + B_3G_2\bar{x}_2 \tag{64}$$

and similarly

$$\dot{\bar{x}}_r = A_r\bar{x}_r + B_rG_1\bar{x}_1 + B_rG_2\bar{x}_2 + B_rG_3\bar{x}_3 \tag{65}$$

Combining the system equations, presented in Eqs 59 through 65, into an augmented state vector $\bar{z}$,

$$z = \left\{\bar{x}_1^T, \bar{e}_1^T, \bar{x}_2^T, \bar{e}_2^T, \bar{x}_3^T, \bar{e}_3^T, \bar{x}_r^T\right\}^T \tag{66}$$

the closed loop system equation may be given as

$$\dot{\bar{z}} = \begin{bmatrix} A_1+B_1G_1 & B_1G_1 & B_1G_2 & B_1G_2 & B_1G_3 & B_1G_3 & 0 \\ 0 & A_1+K_1C_1 & K_1C_2 & 0 & K_1C_3 & 0 & K_1C_r \\ B_2G_1 & B_2G_1 & A_2+B_2G_2 & B_2G_2 & B_2G_3 & B_2G_3 & 0 \\ K_2C_1 & 0 & 0 & A_2-K_2C_2 & K_2C_3 & 0 & K_2C_r \\ B_3G_1 & B_3G_1 & B_3G_2 & B_3G_2 & A_3+B_3G_3 & B_3G_3 & 0 \\ K_3C_1 & 0 & K_3C_2 & 0 & 0 & A_3-B_3C_3 & K_3C_r \\ B_rG_1 & B_rG_1 & B_rG_2 & B_rG_2 & B_rG_3 & B_r\theta_3 & A_r \end{bmatrix} \bar{z} \tag{67}$$

Eq 67 makes it very obvious that controller stability cannot guarantee overall system stability. It is also easy to see that block triangularization will be considerably more difficult to achieve. As before, either

upper or lower block triangularization may be attempted. In either case the resulting eigenvalues will be the same since they are determined by the block diagonal terms. The observation spillover and control spillover terms to be eliminated for both schemes are presented in Table VIII.

Table VIII

Spillover Elimination for Decoupling Three Controllers

Upper Triangularization	or Lower Triangularization
$B_2G_1 = 0$	$B_1G_2 = 0$
$B_3G_1 = 0$	$B_1G_3 = 0$
$B_3G_2 = 0$	$B_2G_3 = 0$
$K_2C_1 = 0$	$K_1C_2 = 0$
$K_3C_1 = 0$	$K_1C_3 = 0$
$K_3C_2 = 0$	$K_2C_3 = 0$

There are actually two methods of approaching the elimination of spillover in the three controller system. The first of these deals with selective placement of the sensors. If the sensors are positioned in a proper manner, the modal amplitude matrix Φ, and as a result, the system's B and C matrices, will be of the form that a selective arrangement of controlled modes will make one controllerorthogonal to the other two controllers. In effect, this reduces the problem to a two controller system since the two controllers will have no effect on a controller orthogonal to them. Then, only the spillover terms between the two non-orthogonal controllers need be considered. This was specifically demonstrated by Miller in his examination of a three controller system.

To present an example, assume the controller three modes are orthogonal to the controller one and two modes. Then all cross terms between

one and three and two and three will be zero, which effectively reduces Table VIII to the spillover elimination requirements:

for upper triangular form

$$B_2G_1 = 0 \qquad \text{and} \qquad K_2C_1 = 0 \tag{68}$$

and for lower triangular form

$$B_1G_2 = 0 \qquad \text{and} \qquad K_1C_2 = 0 \tag{69}$$

It can be shown that these terms are the same as those required to block triangularize the two controller system, thus demonstrating the three controller reduction to a two controller system. However, since the intent of this study is to examine a three and four controller system, this approach will not be addressed further.

The second approach proposes that in the transformation a matrix Γ_3 (or Γ_1) be found which will drive both K_3C_1 and K_3C_2 (K_1C_2 and K_1C_3) to zero, and a matrix T_1 (or T_3) be found which will drive both B_2G_1 and B_3G_1 (B_1G_3 and B_2G_3) to zero. This process will be explained in the next chapter, however, for now, it is not always possible to find transformation matrices which will reduce the spillover terms to zero. On the other hand, it is also not always possible to position the sensors such that there are two orthogonal sets of modes to reduce the system to two controllers. Therefore, a compromise is in order: If two clearly orthogonal sets of modes are not available, the modes should be assigned so they are as nearly orthogonal as possible. Then the transformation is performed on the full set of spillover terms given in Table VIII. This investigation will assume the modes are not fully orthogonal, but still assign the modes to make the controllers as orthogonal as possible, and attempt to find transformation matrices which will make each spillover term in Table VIII approximately zero.

Four Controllers

The four controller development is identical to that of three controllers, so the basic results only will be presented. The state equations are given by setting N = 4 in Eq 41, and the observers are given by Eqs 42 and 43, again setting N = 4. The state estimate error is given by Eq 44 and the resulting control applied is

$$\bar{u} = G_1\hat{x}_1 + G_2\hat{x}_2 + G_3\hat{x}_3 + G_4\hat{x}_4$$

To avoid repeating the equations already presented, suffice it to say that the state estimate errors are of the form, given for the first controller

$$\dot{\bar{e}}_1 = \dot{\hat{x}}_1 - \dot{\bar{x}}_1 = (A_1-K_1C_1)\bar{e}_1 + K_1C_2\bar{x}_2 + K_1C_3\bar{x}_3 + K_1C_4\bar{x}_4 + K_1C_r\bar{x}_r \quad (70)$$

and the full state equations are of the form, again given for the first controller

$$\dot{\bar{x}}_1 = (A_1+B_1G_1)\bar{x}_1 + B_1G_1\bar{e}_1 + B_1G_2\bar{x}_2 + B_1G_3\bar{x}_3 + B_1G_4\bar{x}_4 \quad (71)$$

The remaining three controllers' errors and states may be derived from Eqs 46 and 47, respectively.

These may be combined into the controlled system state vector $\bar{z}$, defined as

$$\bar{z} = \left\{\bar{x}_1^T, \bar{e}_1^T, \bar{x}_2^T, \bar{e}_2^T, \bar{x}_3^T, \bar{e}_3^T, \bar{x}_4^T, \bar{e}_4^T, \bar{x}_r^T\right\}^T \quad (72)$$

and the closed loop system equations may be given as

$$
\dot{\bar{z}} = \begin{bmatrix}
A_1+B_1G_1 & B_1G_1 & B_1G_2 & B_1G_2 & B_1G_3 & B_1G_3 & B_1G_4 & B_1G_4 & 0 \\
0 & A_1-K_1C_1 & K_1C_2 & 0 & K_1C_3 & 0 & K_1C_4 & 0 & K_1C_r \\
B_2G_1 & B_2G_1 & A_2+B_2C_2 & B_2G_2 & B_2G_3 & B_2G_3 & B_2G_4 & B_2G_4 & 0 \\
K_2C_1 & 0 & 0 & A_2-K_2C_2 & K_2C_3 & 0 & K_2C_4 & 0 & K_2C_r \\
B_3G_1 & B_3G_1 & B_3G_2 & B_3G_2 & A_3+B_3G_3 & B_3G_3 & B_3G_4 & B_3G_4 & 0 \\
K_3C_1 & 0 & K_3C_2 & 0 & 0 & A_3-K_3C_3 & K_3C_4 & 0 & K_3C_r \\
B_4G_1 & B_4G_1 & B_4G_2 & B_4G_2 & B_4G_3 & B_4G_3 & A_4+B_4G_4 & B_4G_4 & 0 \\
K_4C_1 & 0 & K_4C_2 & 0 & K_4C_3 & 0 & 0 & A_4-K_4C_4 & K_4C_r \\
B_rG_1 & B_rG_1 & B_rG_2 & B_rG_2 & B_rG_3 & B_rG_3 & B_rG_4 & B_rG_4 & A_r
\end{bmatrix} \bar{z} \tag{73}
$$

The spillover terms to be eliminated are given in Table IX, and correspond to the conditions given in Eqs 50 and 51. It is apparent this system is more difficult to block triangularize than the three controller system. However, a prime advantage to using additional controllers is the number of modes to be controlled may be divided among more controllers. This reduces the order of each controller thus reducing the burden on the computer. This is especially important in solving the matrix Riccati equations, Eqs 35 and 40, since the computational burden is approximately the cube of the order of the equation (Ref 3).

Table IX

Spillover Elimination for Decoupling Four Controllers

Upper Triangularization		or Lower Triangularization	
$B_2G_1 = 0$	$K_2C_1 = 0$	$B_1G_2 = 0$	$K_1C_2 = 0$
$B_3G_1 = 0$	$K_3C_1 = 0$	$B_1G_3 = 0$	$K_1C_3 = 0$
$B_3G_2 = 0$	$K_3C_2 = 0$	$B_1G_4 = 0$	$K_1C_4 = 0$
$B_4G_1 = 0$	$K_4C_1 = 0$	$B_2G_3 = 0$	$K_2C_3 = 0$
$B_4G_2 = 0$	$K_4C_2 = 0$	$B_2G_4 = 0$	$K_2C_4 = 0$
$B_4G_3 = 0$	$K_4C_3 = 0$	$B_3G_4 = 0$	$K_3C_4 = 0$

Sensor/Actuator Requirements

As mentioned for three controllers, in order to perform spillover suppression, one or more gain matrices must be made orthogonal to N-1 B or C matrices. For example, from Eq 50, to satisfy the expression for B_iG_j the columns of G_1 must be simultaneously orthogonal to the rows of B_2 through B_N. In order words, the columns of G_1 must be in the null space of the matrix B_{2N} where B_{2N} is defined as

$$B_{2N} = \begin{bmatrix} B_2 \\ \cdots\cdots \\ B_3 \\ \cdots\cdots \\ \vdots \\ \cdots\cdots \\ B_N \end{bmatrix} \tag{74}$$

The null space of B_{2N} has dimension P_{2N} given as

$$P_{2N} = (n_a - r_{2N}) \tag{75}$$

where

n_a = number of actuators

r_{2N} = rank of $B_{2N} \leq \min(n_2 + n_3 + \ldots + n_N, n_a)$

Therefore, G_1 has P_{2N} columns.

The number of actuators must exceed the rank of B_{2N} in order for $B_{2N} G_1 = 0$. Otherwise the system is overspecified and no transformation matrix exists which will drive the $B_{2N} G_1$ to zero. If the rows of B_{2N} are linearly independent, then the number of actuators needed is given as

$$n_a > \sum_{i=2}^{N} n_i \tag{76}$$

and if the rows are not linearly independent, $n_a > r_{2N}$. It can be seen that the other control gain matrices will have a sufficient number of actuators is the inequality in Eq 76 is met. A similar study shows that the number of sensors needed is, for C_{2N} with linearly independent columns

$$n_s > \sum_{i=1}^{N-1} n_i \tag{77}$$

and for columns that are not linearly independent, $n_s > r_{2N}$ where r_{2N} here is the rank of C_{2N}.

Likewise, for the lower block triangular conditions given in Eq 51, the actuator and sensor requirements can be shown to be

$$n_a > \sum_{i=1}^{N-1} n_i \tag{78}$$

$$n_s > \sum_{i=2}^{N} n_i \tag{79}$$

for linearly independent rows and columns of the B_{2N} and C_{2N} matrices, respectively.

It should be pointed out that satisfying the inequalities given in

Eqs 76 through 79 may actually require more actuators and sensors than indicated. As an example, consider a thirty mode model. Using three controllers, each with ten modes, the above inequalities require at least twenty sensors and twenty actuators to assure decoupled system stability. However, to control and observe the system, at least one more sensor and actuator would be required. These conditions must be met in order to generate the transformation matrices and to implement the controllers.

IV. Transformation Technique

It has been mentioned several times that the close loop state equations, Eqs 49, 67 and 73, will be put into block triangular form by the selective elimination of control and observation spillover terms. However, the exact details of this spillover elimination have been neglected until now. The following will describe the generation of the transformation matrices, which were referred to specifically as T and Γ in the previous section. The T matrix is a transformation matrix for the control spillover and the Γ matrix is a transformation matrix for the observation spillover.

In a single controller case, it can be seen that the spillover terms which, when eliminated, will assure system stability are B_sG or KC_s, where the s subscript designates modes to be suppressed. An immediately obvious solution to this is $G = 0$ or $K = 0$. But this solution will make the respective controllability term B_cG, or observability term KC_c, equal to zero also. Therefore, this solution is unsatisfactory. The transformation method generates a solution which for a single controller, is subject to the conditions:

$$B_sG = 0 \tag{80}$$

or

$$KC_s = 0 \tag{81}$$

while maintaining

$$B_cG \neq 0 \tag{82}$$

or

$$KC_c \neq 0 \tag{83}$$

It would also be desirable to apply the additional constraint to the

residual modes

$$B_r G = 0 \tag{84}$$

$$KC_r = 0 \tag{85}$$

however, due to the large number of structural modes present in the model, this constraint is not realistic and will be ignored in this development. The effects of the residual spillovers may be minimized by the careful selection of modes designated as residual or suppressed, so as to create a frequency separation between the residuals and the bandwidth of the controller.

For a multiple controller, the conditions given in Eqs 80 and 81 apply, but now the B_s and C_s matrices may take on the form illustrated by Eq 74 and will be referred to as the B_{iN} and C_{iN} matrices. Instead of discussing all of the possible combinations of B_{iN} and C_{iN} for N controllers, take as an example the first condition given in Eq 50, that is

$$B_i G_j = 0 \qquad j = 1, 2, \ldots, N-1;\ i = j + 1, \ldots, N \tag{86}$$

Given N controllers, G_1 will have to be made orthogonal to N-1 B_i matrices. The N-1 B_i matrices may be combined into a single matrix such that

$$B_{2N} = \begin{bmatrix} B_2 \\ \cdots\cdots \\ B_3 \\ \cdots\cdots \\ \vdots \\ \cdots\cdots \\ B_N \end{bmatrix} \tag{87}$$

Therefore, one of the conditions to be met is $B_{2n} G_1 = 0$. In other words, the G_1 matrix must be transformed such that its columns are orthogonal to the rows of B_{2N}, or, as stated in the previous section, G_1 must be in the

null space of B_{2N}. This is the most difficult case for N controllers and is presented only to describe how the multiple matrix is set up. The remainder of the derivation will be in terms of a generic B_s matrix which represents B_{2N} and B_2 alike.

The transformation matrix sought will be referred to as T and will be such that

$$B_s T = 0 \tag{88}$$

B_s has the row dimension of n_m (the number of modes to be suppressed) and the column dimension of n_a (the number of actuators). T, therefore, has dimensions of n_a by $n_a - n_m$. If there are fewer actuators than linearly independent modes, then no solution matrix T exists. The system is over-specified in this case, meaning there are more equations than unknowns. If the number of modes and actuators are equivalent, then the system is stable but uncontrollable (or in the case of the KC matrices, the system is stable but unobservable assuming an equal number of sensors and actuators). The actuators (sensors) are saturated with maintaining stability alone. Simply stated, the conditions given in Eq 76 and 77 must be met in order to generate a transformation matrix.

To illustrate the result of applying the transformation matrix described above, consider the following system of controlled and suppressed modes:

$$\dot{\bar{x}}_c = A_c \bar{x}_c + B_c \bar{u} \tag{89}$$

$$\dot{\bar{x}}_s = A_s \bar{x}_s + B_s \bar{u} \tag{90}$$

where

$$\bar{u} = G_c \hat{x}_c \tag{91}$$

The $B_s \bar{u}$ term of Eq 90 is a control spillover term which may be adversely

affected by the control applied to Eq 89. The elimination of this term requires the use of a transformation matrix T such that

$$B_s T = 0 \tag{92}$$

while maintaining

$$B_c T \neq 0 \tag{93}$$

This transformation matrix may be used to define a new control $\bar{\nu}$ as

$$\bar{u} = T\bar{\nu} \tag{94}$$

Inserting this expression into the state equations given in Eqs 89 and 90 yields

$$\dot{\bar{x}}_c = A_c\bar{x}_c + B_c T\bar{\nu} \tag{95}$$

$$\dot{\bar{x}}_s = A_s\bar{x}_s + B_s T\bar{\nu} \tag{96}$$

Letting $B_c T = B^*$ and knowing that $B_s T = 0$ the new system is described by

$$\dot{\bar{x}}_c = A_c\bar{x}_c + B_c^*\bar{\nu} \tag{97}$$

$$\dot{\bar{x}}_s = A_s\bar{x}_s \tag{98}$$

in which no controller spillover exists. The new control vector will be shown to be

$$\bar{\nu} = G_c^*\hat{x}_c \tag{99}$$

With this general overiew of the tranformation process and its results, the development of the matrix T will now be discussed.

The major tool used obtaining this result is called the Singular Value Decomposition (Ref 4). The matrix to be decomposed is B_s which has dimensions $n_m \times n_a$ and can be described by

$$B_s = W\Sigma V^T \tag{100}$$

where

W is an $(n_m \times n_m)$ orthogonal matrix of left singular vectors

V is an $(n_a \times n_a)$ orthogonal matrix of right singular vectors

and

Σ is an $(n_m \times n_a)$ matrix with the s singular values of B_s in the first s entries along the main diagonal and zeroes in all other positions:

$$\Sigma = \begin{bmatrix} S & \vdots & 0 \\ \cdots & \cdots & \cdots \\ 0 & \vdots & 0 \end{bmatrix}_{n_m \times n_a} \tag{101}$$

such that

$$S = \begin{bmatrix} \sigma_1 & o & \cdots & o \\ o & \sigma_2 & & \\ \vdots & & \ddots & \\ o & & & \sigma_s \end{bmatrix} \tag{102}$$

The total number of singular values present is equal to the rank of the B_s matrix, and they are all non-negative. Assuming B_s is of full rank, then $s = \min(n_a, n_m)$.

By partitioning, the W matrix can be defined by

$$W = \begin{bmatrix} W_s & \vdots & W_r \end{bmatrix} \tag{103}$$

where

W_s is an $n_m \times s$ matrix of left singular vectors associated with the non-zero singular values

W_r is an $n_m \times r$ matrix of left singular vectors associated with the zero singular values

and

$$s + r = n_m \tag{104}$$

Similarly, by partitioning, the V matrix can be defined by

$$V = V_s \quad V_p \tag{105}$$

where

V_s is an $s \times n_a$ matrix of right singular vectors associated with the non-zero singular values

V_p is a $p \times n_a$ matrix of right singular vectors associated with the zero singular values.

and

$$s + p = n_a \tag{106}$$

Remembering the V matrix is orthogonal and noting then that

$$V_s^T V_p = 0 \tag{107}$$

the decomposed matrix may be written as

$$B_s T = W_s S V_s^T V_p = B_s V_p = 0 \tag{108}$$

which leads to the conclusion that the transformation matrix desired is given in the matrix of right singular values associated with the zero singular values:

$$T = V_p \tag{109}$$

where $T \neq 0$.

Once the transformation matrix is found, implementation is relatively simple. Equation 94 defined a $\bar{v}_i$ as the new control input vector. This is now given as

$$\bar{v}_i = G_i^* \hat{x}_i \tag{110}$$

The G_i^* matrix is found in the same manner as in the Modal Control section of Chapter III in which

$$G_i^* = -R_i^{*^{-1}} B_i^{*^T} S_i \tag{111}$$

where

$$R_i^* = T_i^T R_i T_i \tag{112}$$

R_i is the positive definite weighting matrix in Eq 33

$$B_i^* = B_i T_i \tag{113}$$

and S_i is the solution to the matrix Riccati equation:

$$S_i A_i + A_i^T S_i - S_i B_i^* R_i^{*^{-1}} B_i^{*^T} S_i + Q_i = 0 \tag{114}$$

Simple manipulation of Eq 111 will show that the transformed gain matrix is finally given by

$$G_i^* = T_i G_i \tag{115}$$

Substitution of this back into the state equations yields a closed loop system which is block triangular with no control spillover.

This technique may be paralleled to obtain a Γ transformation matrix for the observation gain to eliminate observation spillover. Substituting C_s^T for B_s, K^T for G and Γ for T will give the same results with Γ equal to V_p. Ohterwise, a new derivation using C_s and K will give the result that the observation gain transformation matrix Γ is equal to the transpose of the matrix W_r of left singular vectors associated with the zero singular values of C_s. Here, as alluded to earlier, the number of sensors must be greater than the number of modes to be suppressed.

V. Computer Model

Simplicity and flexibility were prime considerations in the development of the computer programs. The general format given by Miller was followed as it provided a very simple progression of logic.

Two programs, using the same logic, were created. The same control techniques are applied, however, the spillover elimination schemes used are different. One provides decoupled control by reducing the closed loop state equation matrix, given in form by Eq 49, to an upper block triangular form. The other reduces the matrix to a lower triangular form. It was deemed unnecessary to combine the two into one program with an input selecting one or the other since the eigenvalue results provided by both programs are identical. In fact, by renumbering the controllers in the spillover elimination portion of one program, the opposite transformation is achieved. For example, in the upper trinagular three controller system, the spillover terms to be suppressed are given in the first column of Table VIII. By inverting the first column subscripts such that 1, 2, 3 becomes 3, 2, 1, it can be seen that the resulting spillover terms are identical to those in the second column for a lower triangular transformation. The subscript inversion is equivalent to renumbering the controllers in the transformation portions of the program. For this reason, only the program for the upper block triangular controlled system is presented. This is listed in Appendix C. The subroutines which support this program are given in Appendix D. Several other subroutines are called but not listed. These are provided by the International Mathematical and Statistical Library (IMSL).

Since program flexibility is desired, once the modal data is loaded, the program is designed to make any number of runs with different para-

meters for each run. The parameters that may be varied by the operator include: using a three or a four controller system, which modes are assigned to each controller, what control and observer weighting values to assign to each mode, and what initial system damping ratio is applied.

The program may read the input data from initialization assignments within the program or from a permanent data file. In either case, the program operates as if it were interactive by prompting for input and then echoing the data read in. This makes the output very easy to interpret by allowing the user to trace the computer's progress through the execution of the program.

The program is initialized by inputting the number of controllers desired and then the number of modes in each controller. If three controllers are used, the number of residual modes will be requested, otherwise the fourth controller system is run without residuals. Next the number of actuators and sensors are input, along with the modal damping ratio ζ. For the models studied, the sensors, actuators and open loop damping applied were obtained from previous studies. CSDL 1 was tested with six actuators, six sensors, and a damping ratio of 0.005 (Ref 7), and CSDL 2 was tested with twenty-one actuators, twenty-one sensors, and a damping ratio of 0.01 (Ref 10). The program will then read from a permanent file the matrix ($\Phi^T D$) of modal amplitudes at each actuator location, followed by the transpose of the matrix of modal amplitudes at each sensor location. In this study, these two matrices are identical since colocated pairs of actuators and sensors are employed. The sensor modal amplitude matrix is input in transposed form so that the matrix for a colocated system may be copied directly from the actuator modal amplitude matrix. However, these are left as separate entries in the

event the actuators and sensors are not colocated. Finally, the modal frequencies are read in from the permanent file. After this preload of data, the desired run is made by specifying which modes are to be controlled by each controller and which modes are to be left as residuals, along with the desired control and observer weighting values for each mode. Additional runs may be made in the same job by specifying different modal arrangements, weighting assignments or controller configurations.

Program execution actually begins with the formation of the A, B, C and weighting matrices for each controller. This is conveniently done by subroutines which read the required data for the modes specified. These subroutines allow the operator to change the size of the controllers as needed simply by specifying the number of modes to be placed in each controller.

Once the initial matrices are formed, the control and observation feedback gain matrices, G_i and K_i respectively, are determined using a series of subroutines which generate a numerical solution to the matrix Riccati equation. These sophisticated routines were created by Kleinman (Ref 11) and so are known as the Kleinman routines. The G_i and K_i matrices, along with the parameter matrices, A, B, and C, are then combined to form the closed loop system matrix, as given in form by Eq 49. This particular program develops the three controller system with residuals as in Eq 67, but unlike Eq 73, does not include residual terms in the four controller systems.

The eigenvalue analysis of the system is performed next, making use of the ISML routine EIGRF which determines the eigenvalues of real non-symmetric matrices. First, the eigenvalues of the overall system matrix are

generated to show the stability of the full system. Then the eigenvalues of the A + BC and A - KC matrices for each controller are found. These values demonstrate the effectiveness of the individual controller and show which modes were affected most. Last, for the residual modes, if any, the eigenvalues of the A residual matrix are given.

Spillover elimination is the next step in the control algorithm. This, too, varies with controller configuration, but also varies with the form of triangularization selected. The 3 or 4 controller variation is accomodated by the program, but the type of triangularization selected determines which of the two programs is used. This selection is more a matter of operator preference than system requirement, though, since the upper and lower block triangular reductions yield results identical to several decimal places. Regardless of the program selected, the spillover elimination is a rather lengthy portion of the program. The modes to be suppressed are formed into non-zero B_s and C_s^T matrices of the form given in Eq 87. The IMSL routine LSVDF is used to perform a singular value decomposition on these matrices. By using the left singular vectors associated with the zero singular values of B_s and C^T_s, the transformation matrices T_i and Γ_i are formed. The program then loops back with the transformation matrices and these are applied as discussed in Chapter IV to create new gain matrices, G_i^* and K_i^*. A new closed loop system, which has the selected block triangular form, is generated and the eigenvalue analysis is repeated. In this analysis, all of the individual controller eigenvalues should be matched by identical eigenvalues in the overall closed loop system, whereas, in the first analysis there may be minimal correlation, depending on system coupling.

The difference in sizes of the two models examined using these programs demonstrate, to some extent, the high degree of flexibility of the control method applied. The only change that needs to be made to adapt the method for another structure is the basic matrix dimensioning in the program. Nothing else has to be altered, as long as the system model can be defined by

$$\dot{\bar{x}} = A\bar{x} + B\bar{u} \tag{116}$$

and

$$\bar{y} = C\bar{x} \tag{117}$$

as discussed in Chapter III. Thus, the ease of application of the control method heretofore described can be seen. Now, the performance of control method will be examined using the programs' eigenvalue analysis results.

VI. Investigation

Control of a large flexible space structure is a complicated task that is best taken one step at a time. Therefore, a systematic, building-block approach was used to conduct the study. Miller's work concentrated on one and two controller systems. This investigation is the next logical step in the process, concentrating on the three and four controller systems.

Outline

The initial phase of this study concentrated on the control of the CSDL 1 model using three controllers with no residual terms. The first eight structural modes were used in this analysis, and the control weighting matrix was fixed at $Q_i = 20 \begin{bmatrix} \ddots & \\ & I \end{bmatrix}$.

Next, the residuals were added to the system, utilizing the last four structural modes of the CSDL 1 model. With this, the full twelve mode model was implemented.

The residuals were then incorporated into a controller to form a four controller system without residuals. Again, the full twelve mode model was used to test the new system.

Once satisfactory results were obtained using the CSDL 1 model, the program was expanded in dimensions to accomodate the CSDL 2 model. A twelve mode subset of the modeled modes was used for this segment of the study. The selection of this subset of modes will be explained in the next section. Since twelve modes were used in both models, the increase in dimensions was dictated by the number of sensors and actuators used in the second model. Therefore, all matrices were expanded to a minimum dimension of twenty-one, as can be seen in the dimensioning portion of the program in Appendix C.

It was desired to control all twelve modes of the CSDL 2 model, therefore, no residual modes were included in this phase of the study.

Three controllers were used with a control weighting matrix of $Q_i = 20 \begin{bmatrix} \ddots & \\ & I \end{bmatrix}$.

To obtain desired control characteristics, the values of the control weighting matrix were varied and the resulting eigenvalue movements were observed. Three of the twelve modes are rigid body modes, therefore the weightings on these modes were varied first, keeping the value of 20 for all of the flexible modes. Then the values of the weightings for the flexible modes were varied individually to see what effect this had on the system's controllability and observability.

Finally, the CSDL 2 model was run using the four controller system. The control weightings were varied just as in the three controller system to determine if there were any significant changes in the system's controllability or observability. The results of the preceeding outline will be presented shortly.

Modal Selection and Grouping

One of the more difficult tasks in controlling a large space structure is the determination of which structural modes are to be actively controlled and which are left as residuals. Factors which affect this selection process include sensor/actuator placement and alignment, controller bandwidths, and control constraints such as line-of-sight tolerances.

For multiple controllers, an additional step has to be taken. This is the assignment of the modes to be controlled to minimize the control effort. Organizing modes into compatible groups can be done by a simple examination of the angles between the vectors of modal amplitudes (the angles between the rows of the $\Phi^T D$ matrix). Defining these vectors

as ψ_i, the angles may be found from the equation for the dot product of two vectors, given by

$$\bar{\psi}_i \cdot \bar{\psi}_j = \left|\bar{\psi}_i\right|\left|\bar{\psi}_j\right| \cos \theta_{ij} \tag{118}$$

The modes are then grouped so no two orthogonal modes are in the same controller. In some cases the grouping of orthogonal modes in the same controller is unavoidable. Angles smaller than ± 45 degrees were used in this study when possible, however, in some cases the limit was extended to ± 70 degrees.

CSDL 1. Selection of the modes to be controlled in the first model was not a difficult task as there are only twelve modeled modes for the structure. As noted earlier, the first eight modes were originally selected for active control. The last four were initially left as residuals, but were later used as controlled modes. Hence, the full system was eventually controlled with no residual modes. The assignment of modes to controllers was made based on the relative angle mode angles given in Table X. The actual groupings are presented case by case in the next section.

CSDL 2. The selection of modes for the second model, on the other hand, was not a simple task. There are well over one hundred catalogued modes at present, however, only a small subset of the modeled modes were selected for active control. The first forty-four modes are generally used to demonstrate the structural behavior and a subset of twelve modes was selected from these. The specific modes were chosen as a result of a study conducted by Lockheed and sponsored by Rome Air Development Center (Ref 10). This study used a High Authority Control method and based its modal selection upon the line-of-sight and defocus

Table X

Relative Angles* Between CSDL 1 Modes

Mode	1	2	3	4	5	6
1	0.00	90.00	90.00	66.40	90.00	90.00
2	90.00	0.00	64.33	90.00	96.61	90.00
3	90.00	64.22	0.00	90.00	85.25	90.00
4	66.40	90.00	90.00	0.00	90.00	90.00
5	90.00	96.61	85.25	90.00	0.00	90.00
6	90.00	90.00	90.00	90.00	90.00	0.00
7	33.23	90.00	90.00	99.63	90.00	90.00
8	90.00	50.12	111.44	90.00	84.38	90.00
9	90.00	147.39	145.07	90.00	77.97	90.00
10	51.52	90.00	90.00	14.88	90.00	90.00
11	90.00	84.91	61.82	90.00	23.47	90.00
12	90.00	108.20	89.58	90.00	11.63	90.00

Mode	7	8	9	10	11	12
1	33.23	90.00	90.00	51.52	90.00	90.00
2	90.00	50.12	149.39	90.00	84.91	108.20
3	90.00	111.44	145.07	90.00	61.82	89.58
4	99.63	90.00	90.00	14.88	90.00	90.00
5	90.00	84.38	77.97	90.00	23.47	11.63
6	90.00	90.00	90.00	90.00	90.00	90.00
7	0.00	90.00	90.00	84.75	90.00	90.00
8	90.00	0.00	97.28	90.00	92.36	92.83
9	90.00	97.28	0.00	90.00	98.79	68.88
10	84.75	90.00	90.00	0.00	90.00	22.09
11	90.00	92.36	98.79	90.00	0.00	30.09
12	90.00	92.83	68.88	22.09	30.09	0.00

*all angles in degrees

Table IX

Relative Angles* Between CSDL 2 Modes

Mode	4	5	6	7	12	13
4	0.00	89.09	90.00	90.01	90.09	123.20
5	89.99	0.00	67.47	175.39	116.85	90.05
6	90.00	67.47	0.00	115.31	0.00	89.99
7	90.00	175.39	115.31	0.00	60.67	89.69
12	90.00	116.85	104.01	60.67	0.00	89.69
13	123.20	90.05	89.99	39.95	89.69	0.00
17	107.48	89.97	90.04	90.02	90.02	61.22
21	90.05	106.57	116.99	73.19	102.77	90.07
22	90.01	116.23	91.57	66.49	68.57	89.87
28	39.16	87.89	89.41	92.45	96.61	104.90
30	81.12	87.94	89.27	92.35	95.63	73.29

Mode	17	21	22	24	28	30
4	104.48	90.05	90.01	90.01	39.16	81.12
5	89.97	106.57	116.23	90.16	87.89	87.84
6	90.04	116.99	91.57	80.13	89.41	89.27
7	90.02	73.19	66.49	90.68	92.45	92.35
12	90.01	102.77	68.57	111.87	96.61	95.63
13	61.22	90.07	89.87	90.15	104.90	73.29
17	0.00	89.91	90.15	89.96	80.56	127.80
21	89.91	0.00	93.88	38.05	93.50	93.10
22	90.15	93.88	0.00	103.22	90.51	90.74
24	89.96	38.05	103.22	0.00	94.15	93.50
28	80.56	93.50	90.51	94.15	0.00	89.82
30	127.80	93.10	90.74	93.50	89.92	0.00

*all angles in degrees

equations given by a TRW study (Ref 12). The line-of-sight and defocus algorithm is presented in Appendix E.

The modes used in this investigation contain three rigid modes--labeled 4, 5, and 6--and 9 flexible body modes--labeled 7, 12, 13, 17, 21, 22, 24, 28, and 30. These modes were selected by Lockheed as having the greatest impact on line-of-sight and defocus, based on the equations given in Appendix E, and so were adopted for this study.

Applying the relationship given by Eq 118, the angles between the twelve modes are given in Table XI. The actual groupings selected will be presented case by case in the following section.

VII. Results

For the CSDL 1 model, the open loop damping applied was 0.005. Earlier studies of the model showed that a closed loop damping of 0.10 on each mode was needed to meet pointing requirements. Therefore, a minimum of ten percent damping became the desired parameter for acceptable system performance. Due to unresolved problems with the computer subroutine for a time response, line-of-sight performance could not be evaluated, hence, the closed loop damping is the only numerical performance parameter available.

Calico and Miller determined that a control weighting matrix of $Q = 20 \begin{bmatrix} \diagdown \\ I \\ \diagdown \end{bmatrix}$ was sufficient to meet the ten percent damping requirement for one and two controller systems. This Q matrix was adopted as an initial value in this study.

From Table X, the most favorable modal groupings for a three controller are given by

Group 1: 2, 3, 8, 9

Group 2: 5, 6, 11, 12

Group 3: 1, 4, 7, 10

Mode 6 was found to be mutually orthogonal with every other mode. Its placement is based on the recommendation that the last four modes be treated as residuals. Without mode 6, the second group would consist of mode 5 alone. Therefore mode 6 is placed in the second group and the resulting groupings are

Group 1: 2, 3, 8

Group 2: 5, 6

Group 3: 1, 4, 7

Residuals: 9, 10, 11, 12

The first test was performed without residuals to insure that the transformation portion of the program would successfully block triangularize the system through spillover elimination. The resulting eigenvalue analysis is presented in Table XII. The overall system eigenvalues are given and are arranged by their respective controller assignments. The individual modes may be identified by the imaginary parts of the eigenvalues, as these are approximately equal to the modal frequencies. This particular system was stable and very well damped (average damping of thirty percent) before transformation. After the transformation, stability was maintained, as expected, and there was a notable loss in damping on three modes. There was an overall movement of eigenvalues to the right, meaning after the transformation there was less system stability. Nevertheless, the transformation succeeded in reducing the system to a block triangular form, which was the intent of this step.

It should be pointed out that the results given were obtained using an upper block triangular transformation. A lower block triangular transformation yields the same overall system results, but the controller eigenvalues are presented differently. When examining the A + BG and A - KC eigenvalues for each controller, those eigenvalues for A +BG in an upper triangular system are equal to those for A - KC in a lower triangular system. Likewise, those eigenvalues for A - KC in an upper triangular system are equal to those for A + BG in a lower triangular system. Table XIII presents the separate controller eigenvalues for the system given in Table XII. The upper and lower block triangular systems are presented side-by-side to show controller relationships.

Table XII

CSDL 1 Overall Eigenvalue Analysis - 3 Controllers

Modal Assignment

Controller 1: 2, 3, 8

Controller 2: 5, 6

Controller 3: 1, 4, 7

Residuals: None

Overall System Eigenvalues

Before Transformation		After Transformation	
Controller 1			
-1.5814 ± 5.59186i	ζ = 0.283	-1.4503 ± 5.52640i	ζ = 0.262
-1.4394 ± 5.36998i	ζ = 0.268	-1.5096 ± 5.50278i	ζ = 0.274
-.82780 ± 2.99571i	ζ = 0.276	-0.0895 ± 2.96361i	ζ = 0.030
-1.0125 ± 2.72086i	ζ = 0.372	-0.9389 ± 2.84061i	ζ = 0.319
-.44731 ± 1.50629i	ζ = 0.297	-0.4183 ± 1.44705i	ζ = 0.289
-.54119 ± 1.39584i	ζ = 0.387	-0.4969 ± 1.44217i	ζ = 0.345
Controller 2			
-.16127 ± 4.90965i	ζ = 0.328	-1.6127 ± 4.90965i	ζ = 0.328
-1.6126 ± 4.90962i	ζ = 0.328	-1.3253 ± 4.87632i	ζ = 0.272
-1.2041 ± 3.83702i	ζ = 0.314	-0.7383 ± 3.87276i	ζ = 0.191
-1.3672 ± 3.48899i	ζ = 0.392	-0.0192 ± 3.84834i	ζ = 0.005
Controller 3			
-.15673 ± 5.46078i	ζ = 0.287	-1.5672 ± 5.46075i	ζ = 0.287
-1.5672 ± 5.46075i	ζ = 0.287	-1.3751 ± 5.4581i	ζ = 0.252
-1.0420 ± 3.42633i	ζ = 0.304	-0.5452 ± 3.55866i	ζ = 0.153
-1.0420 ± 3.42632i	ζ = 0.304	-1.0419 ± 3.42632i	ζ = 0.304
-.34014 ± 1.16396i	ζ = 0.292	-0.1766 ± 1.16933i	ζ = 0.151
-.34014 ± 1.16396i	ζ = 0.292	-0.3401 ± 1.16396i	ζ = 0.292

Table XIII

Upper and Lower Triangular Transformation

Comparison of Controller Eigenvalues

Modal Assignment

Controller 1: 2, 3, 8	Controller: 1, 4, 7
Controller 2: 5, 6	Residual: None

Transformed Controller Eigenvalues

Upper Block Triangular	Lower Block Triangular
A + BG 1	A + BG 1
-1.4503 ± 5.52640i	-1.5096 ± 5.50278i
-0.0895 ± 2.96361i	-0.9389 ± 2.84061i
-0.4183 ± 1.44705i	-0.4970 ± 1.44218i
A - KC 1	A - KC 1
-1.5096 ± 5.50278i	-1.4503 ± 5.52640i
-0.9389 ± 2.84061i	-0.0895 ± 2.96361i
-0.4970 ± 1.44218i	-0.4182 ± 1.44705i
A + BG 2	A + BG 2
-1.3253 ± 4.87632i	-1.6127 ± 4.90964i
-0.7383 ± 3.87276i	-0.0192 ± 3.84834i
A - KC 2	A - KC 2
-1.6127 ± 4.90964i	-1.3253 ± 4.87632i
-0.0192 ± 3.84834i	-0.7383 ± 3.87276i
A + BG 3	A + BG 3
-1.5672 ± 5.46075i	-1.3751 ± 5.45811i
-1.0419 ± 3.42632i	-0.5452 ± 3.55866i
-0.3401 ± 1.16396i	-0.1766 ± 1.16933i
A - KC 3	A - KC 3
-1.3751 ± 5.45811i	-1.5672 ± 5.46073i
-0.5452 ± 3.55866i	-1.0419 ± 3.42632i
-0.1766 ± 1.16933i	-0.3401 ± 1.16396i

Next, the four residual modes are added to complete the model. It was desired to see the movement of the residuals, if any, caused by the spillover elimination. The eigenvalue analysis for this step is presented in Table XIV. As before, there is a slight sacrifice in the closed loop damping during the transformation, but only two modes exhibited losses below the ten percent mark. The first of these is due to a decrease in controllability in the first controller, which is expected to occur. The second is believed to be a result of the pairing of modes 5 and 6 in the same controller. This is supported by several different groupings with and without modes 5 and 6 together. The drastic reduction in the controllability and/or observability in mode 5 is not seen when modes 5 and 6 are in separate controllers. Therefore, this indicates a bad grouping of modes, but system stability was not totally sacrificed. Overall, the requirement of ten percent damping in all modes was met. The residuals, although less stable, did not become unstable, and maintained the 0.005 damping originally applied to the system.

To maintain the parallel examination, the same modal grouping was then controlled using four controllers. As before, damping applied was 0.005 and the control weighting matrix was $Q = 20 \begin{bmatrix} \ddots & \\ & I \end{bmatrix}$. The resulting eigenvalue analysis is given in Table XV. Again, a loss in damping occurs during transformation for the first three controllers, but the fourth controller actually show some improvement in damping on the modes which were previously residuals. Also, for the first time during this study, the damping on one mode in the first controller dropped below the original open loop damping, this being mode 3. The

Table XIV

CSDL 1 Overall Eigenvalue Analysis - 3 Controllers

Modal Assignment

Controller 1: 2, 3, 8
Controller 2: 5, 6
Controller 3: 1, 4, 7
Residual: 9, 10, 11, 12

Overall System Eigenvalues

Before Transformation		After Transformation	
Controller 1			
-1.5082 ± 5.60877i	ζ = 0.269	-1.3875 ± 5.69418i	ζ = 0.244
-1.1542 ± 5.36410i	ζ = 0.282	-.15842 ± 5.36287i	ζ = 0.295
-1.2334 ∓ 3.18703i	ζ = 0.387	-0.0903 ∓ 2.96069i	ζ = 0.030
-1.1119 ± 2.60129i	ζ = 0.427	-0.9482 ± 2.81358i	ζ = 0.337
-0.3482 ± 1.58607i	ζ = 0.219	-0.3555 ± 1.52676i	ζ = 0.233
-0.6579 ± 1.35047i	ζ = 0.487	-0.5482 ± 1.38356i	ζ = 0.396
Controller 2			
-1.6126 ± 4.90965i	ζ = 0.328	-1.6127 ± 4.90965i	ζ = 0.328
-1.6126 ± 4.90962i	ζ = 0.328	-1.3253 ± 4.87632i	ζ = 0.339
-1.0697 ± 4.01342i	ζ = 0.267	-0.0192 ± 3.84384i	ζ = 0.005
-0.8339 ± 3.77243i	ζ = 0.221	-1.0692 ± 3.35319i	ζ = 0.319
Controller 3			
-1.5124 ± 5.51287i	ζ = 0.274	-1.6097 ± 5.52297i	ζ = 0.291
-1.6183 ± 5.41292i	ζ = 0.299	-1.3595 ± 5.38813i	ζ = 0.252
-1.4846 ± 3.40498i	ζ = 0.436	-0.7383 ± 3.87276i	ζ = 0.191
-0.6912 ± 3.20252i	ζ = 0.216	-0.5112 ± 3.66404i	ζ = 0.140
-0.2689 ± 1.22006i	ζ = 0.220	-0.3381 ± 1.18736i	ζ = 0.285
-0.4152 ± 1.12304i	ζ = 0.370	-0.1719 ± 1.13705i	ζ = 0.151
Residual			
-0.0701 ± 13.9648i	ζ = 0.005	-0.0699 ± 13.9664i	ζ = 0.005
-0.0573 ± 10.8978i	ζ = 0.005	-0.0548 ± 10.9231i	ζ = 0.005
-0.0679 ± 10.2574i	ζ = 0.005	-0.0517 ± 10.3005i	ζ = 0.005
-0.0768 ± 8.88312i	ζ = 0.009	-0.0451 ± 8.92917i	ζ = 0.005

Table XV

CSDL 1 Overall Eigenvalue Analysis - 4 Controller

Modal Assignments

Controller 1: 2, 3, 8
Controller 2: 5, 6
Controller 3: 1, 4, 7
Controller 4: 9, 10, 11, 12

Overall System Eigenvalues

Before Transformation		After Transformation	
Controller 1			
-1.5834 ± 5.79320i	ζ = 0.273	-1.4838 ± 5.62027i	ζ = 0.264
-1.4901 ± 5.55774i	ζ = 0.268	-1.4925 ± 5.34587i	ζ = 0.279
-1.1962 ± 3.37596i	ζ = 0.354	-0.0120 ± 3.85157i	ζ = 0.003
-1.1160 ± 2.78359i	ζ = 0.401	-0.9282 ± 2.79036i	ζ = 0.333
-0.3421 ± 1.66620i	ζ = 0.205	-0.3831 ± 1.59511i	ζ = 0.240
-0.6071 ± 1.37905i	ζ = 0.440	-0.4653 ± 1.42434i	ζ = 0.327
Controller 2			
-1.6127 ± 4.90965i	ζ = 0.328	-1.6126 ± 4.90965i	ζ = 0.328
-1.6126 ± 4.90964i	ζ = 0.328	-1.6126 ± 4.90960i	ζ = 0.328
-1.0361 ± 5.15058i	ζ = 0.201	-0.0192 ± 3.84834i	ζ = 0.005
-1.0151 ± 4.24418i	ζ = 0.239	-0.3599 ± 3.60757i	ζ = 0.100
Controller 3			
-1.6365 ± 5.39357i	ζ = 0.303	-1.3751 ± 5.45811i	ζ = 0.252
-1.7358 ± 5.16475i	ζ = 0.336	-1.5566 ± 5.45555i	ζ = 0.281
-1.3556 ± 3.64465i	ζ = 0.372	-0.2324 ± 3.55932i	ζ = 0.065
-0.9042 ± 3.61843i	ζ = 0.250	-0.5452 ± 3.55866i	ζ = 0.153
-0.2572 ± 1.24419i	ζ = 0.207	-0.1766 ± 1.16933i	ζ = 0.151
-0.4006 ± 1.12651i	ζ = 0.356	-0.2668 ± 1.16671i	ζ = 0.229
Controller 4			
-0.5085 ± 13.9942i	ζ = 0.036	-0.3065 ± 13.9716i	ζ = 0.026
-0.2441 ± 13.7405i	ζ = 0.018	-0.1137 ± 13.9410i	ζ = 0.008
-1.2226 ± 11.0541i	ζ = 0.111	-0.9592 ± 10.9018i	ζ = 0.088
-1.5415 ± 10.3622i	ζ = 0.149	-0.2197 ± 10.8734i	ζ = 0.020
-0.5054 ± 10.1003i	ζ = 0.050	-0.0515 ± 10.3035i	ζ = 0.005
-0.8318 ± 9.52068i	ζ = 0.087	-1.2352 ± 10.2307i	ζ = 0.121
-1.6044 ± 8.97922i	ζ = 0.179	-1.5900 ± 9.15870i	ζ = 0.174
-0.8934 ± 8.08421i	ζ = 0.110	-1.0199 ± 8.32872i	ζ = 0.122

effects of this cannot be determined until a time history of system response can be generated. The other mode seriously affected was mode 5 again. This is an expected result, as mentioned earlier. However, the overall results from this four controller run were surprising, since the requirement was specified in an earlier derivation that the number of modes being suppressed could not exceed the number of sensors available. Decoupling controller 1 in this case involves suppressing nine modes with a six sensor system. This is the reason for the total loss in damping and probably accounts in large part for the overall decrease in closed loop damping. In all other modal groupings, the four controller system failed to stabilize the system and extremely large, positive eigenvalues were given in the overall system analysis. This particular run was successful only on a chance compatible grouping.

For the CSDL 2 model, the open loop damping ratio applied was 0.010, twice that for the CSDL 1 model. Since a multiple controller had never been applied to this model prior to this study, an initial control weighting matrix of $Q = 20 \begin{bmatrix} \diagdown & \\ & I \\ & & \diagdown \end{bmatrix}$ was used for a first "feel" at controlling the system. The modal angles from Table XI give the following grouping for a three controller system, controlling all twelve modes:

Group 1: 5, 6, 7, 21

Group 2: 4, 13, 17, 30

Group 3: 12, 22, 24, 28

(recalling that the modes selected are not sequential). Mode 28 is similar to mode 6 in the first model in the sense that it is mutually orthogonal to all except mode 4. Therefore, it is randomly placed with the third grouping to balance the modal distribution. Control of all

twelve modes is desired, therefore, there will be no residual modes in the study of the second model. As in the first model, we will try to achieve a closed loop damping of ten percent on all modes. This is a simple starting point for testing the application of a multiple controller to the given model and is in no way definitive as to controller success or failure.

The eigenvalue analysis for the first run using the modal groupings above and $Q = 20 \begin{bmatrix} \diagdown & \\ & I \\ & & \diagdown \end{bmatrix}$ is given in Table XVI. Although no inherent instabilities exist, it is evident there is an excessive amount of damping on the rigid body modes (over one hundred percent) and no increase at all in the flexible modes. In some instances, there is even a decrease in the damping during the transformation, but as can be seen, no mode went below the initial open loop damping of one percent.

The next step was to equalize the damping between the rigid and flexible modes. This was atempted by raising the control weighting on the flexible modes and decreasing it on the rigid body modes. In the untransformed closed loop system, there is a symmetry which exists only as a result of the colocation of sensors and actuators. This symmetry is apparent in the matrix Riccati solutions to $A_i + B_iG_i$ and $A_i - K_iC_i$, in the state feedback matrices G_i and K_i and in the controller eigenvalues of $A_i + B_iG_i$ and $A_i - K_iC_i$. However, when the control weightings are varied as described, this symmetry is completely lost in those controllers containing both rigid and flexible modes. This loss of symmetry is not understood, since the weighting matrices are identical for both control and observation calculations. It is

Table XVI

CSDL 2 Overall Eigenvalue Analysis - 3 Controllers

$q_i = 20$

Modal Assignments

Controller 1: 5, 6, 7, 21
Controller 2: 4, 13, 17, 30
Controller 3: 12, 22, 24, 28
Residual: None

Overall System Eigenvalues

Before Transformation		After Transformation	
Controller 1			
-.06463 ± 6.10729i	ζ = 0.011	-.06305 ± 6.10713i	ζ = 0.010
-.06495 ± 6.10696i	ζ = 0.011	-.06479 ± 6.10711i	ζ = 0.011
-.04041 ± 0.71735i	ζ = 0.056	-.03367 ± 0.71616i	ζ = 0.047
-.04187 ± 0.71503i	ζ = 0.058	-.04115 ± 0.71615i	ζ = 0.057
-.24749 ± 0.24211i	ζ = 1.022	-.25463 ± 0.23989i	ζ = 1.061
-.26163 ± 0.23829i	ζ = 1.098	-.24170 ± 0.22884i	ζ = 1.056
-.20131 ± 0.19956i	ζ = 1.009	-.20632 ± 0.19814i	ζ = 1.041
-.21119 ± 0.19689i	ζ = 1.072	-.18949 ± 0.18310i	ζ = 1.035
Controller 2			
-.25049 ± 25.0483i	ζ = 0.010	-.25049 ± 25.0483i	ζ = 0.010
-.25049 ± 25.0483i	ζ = 0.010	-.25049 ± 25.0483i	ζ = 0.010
-.05144 ± 5.12138i	ζ = 0.010	-.01543 ± 5.12138i	ζ = 0.010
-.05144 ± 5.12138i	ζ = 0.010	-.05144 ± 5.12138i	ζ = 0.010
-.08045 ± 3.74518i	ζ = 0.021	-.07811 ± 3.74502i	ζ = 0.021
-.08042 ± 3.74518i	ζ = 0.021	-.08044 ± 3.74516i	ζ = 0.021
-.29226 ± 0.27147i	ζ = 1.077	-.28999 ± 0.26819i	ζ = 1.081
-.29512 ± 0.27079i	ζ = 1.090	-.22818 ± 0.21713i	ζ = 1.051
Controller 3			
-.21691 ± 21.6903i	ζ = 0.010	-.21691 ± 21.6903i	ζ = 0.010
-.21691 ± 21.6903i	ζ = 0.010	-.21691 ± 21.6903i	ζ = 0.010
-.14844 ± 11.1403i	ζ = 0.013	-.12045 ± 11.1403i	ζ = 0.011
-.14763 ± 11.1395i	ζ = 0.013	-.14801 ± 11.1399i	ζ = 0.013
-.07731 ± 7.28026i	ζ = 0.011	-.07444 ± 7.28023i	ζ = 0.010
-.07710 ± 7.28007i	ζ = 0.011	-.07717 ± 7.28020i	ζ = 0.011
-.04368 ± 3.50192i	ζ = 0.012	-.03802 ± 3.50173i	ζ = 0.011
-.04277 ± 3.50111i	ζ = 0.012	-.04313 ± 3.50168i	ζ = 0.012

believed to be a numerical incongruity in the matrix Riccati solution subroutine, MRIC (Appendix D), but this is not confirmed.

To bypass this problem until its effects on the system performance can be determined, the modal groupings were rearranged to combine the rigid body modes into one controller. As a result, the groupings became:

Group 1: 4, 5, 6

Group 2: 7, 13, 17, 21, 30

Group 3: 12, 22, 24, 28

The control weightings could then be adjusted freely for the flexible and rigid body modes because they are totally decoupled. The rigid body mode control weighting was adjusted from 0.02 to 20 by orders of magnitude and the flexible body mode control weighting was adjusted from 20 to 15000 by approximate doubles of the previous value. A representative eigenvalue analysis is presented in Table XVII. The values of q_i are presented such that

$$Q = \begin{bmatrix} q_i & & \\ & \ddots & \\ & & q_j \end{bmatrix} \tag{119}$$

There is an unstable mode present with this modal grouping and it exists only within the overall system since the individual controllers are stable. But the transformation succeeded in stabilizing the mode and even increased the damping on the mode. Damping on two modes achieved the ten percent desired (modes 7 and 13), not to mention the rigid body modes, all of which are critically damped. Several other modes had significant gains in their damping (modes 12, 21, 22 and 24). However, other modes sacrified some of their damping during the transformation, therefore

Table XVII

CSDL 2 Overall Eigenvalue Analysis - 3 Controllers

$q_{rigid} = 2.0 \qquad q_{flexible} = 1000$

Modal Assignments

Controller 1: 4, 5, 6
Controller 2: 7, 13, 17, 21, 30
Controller 3: 12, 22, 24, 28
Residuals: None

Overall System Eigenvalues

Before Transformation		After Transformation	
Controller 1			
-.16355 ± 0.64915i	ζ = 0.252	-.16093 ± 0.15691i	ζ = 1.026
-.58333 ± 0.57945i	ζ = 1.007	-.14062 ± 0.13792i	ζ = 1.020
-.11817 ± 0.24437i	ζ = 0.484	-.11454 ± 0.11307i	ζ = 1.013
-.16155 ± 0.15663i	ζ = 1.031	-.10480 ± 0.10367i	ζ = 1.011
-.14044 ± 0.13790i	ζ = 1.018	-.08908 ± 0.08838i	ζ = 1.008
-.11469 ± 0.13324i	ζ = 1.013	-.00248 ± 0.00248i	ζ = 1.000
Controller 2			
-.25049 ± 25.0483i	ζ = 0.010	-.25050 ± 25.0483i	ζ = 0.010
-.25049 ± 25.0483i	ζ = 0.010	-.25050 ± 25.0483i	ζ = 0.010
-.14827 ± 6.12869i	ζ = 0.024	-.12806 ± 6.10616i	ζ = 0.021
-.18024 ± 6.09272i	ζ = 0.030	-.14468 ± 6.10581i	ζ = 0.024
-.06326 ± 5.12268i	ζ = 0.012	-.06036 ± 5.12128i	ζ = 0.012
-.05924 ± 5.11896i	ζ = 0.012	-.06072 ± 5.12126i	ζ = 0.012
-.60535 ± 3.79960i	ζ = 0.159	-.42295 ± 3.72517i	ζ = 0.114
-.40053 ± 3.57023i	ζ = 0.112	-.48612 ± 3.71848i	ζ = 0.131
-.60203 ± 1.05693i	ζ = 0.570	-.23565 ± 0.72725i	ζ = 0.324
+.47643 ± 0.67637i	ζ = —	-.02015 ± 0.71612i	ζ = 0.028
Controller 3			
-.21691 ± 21.6903i	ζ = 0.010	-.21691 ± 21.6903i	ζ = 0.010
-.21691 ± 21.6903i	ζ = 0.010	-.21691 ± 21.6903i	ζ = 0.010
-.72335 ± 11.1383i	ζ = 0.065	-.34237 ± 11.1358i	ζ = 0.031
-.67321 ± 11.0839i	ζ = 0.061	-.69781 ± 11.1194i	ζ = 0.063
-.21047 ± 7.29088i	ζ = 0.029	-.13175 ± 7.27945i	ζ = 0.018
-.18001 ± 7.25877i	ζ = 0.025	-.19501 ± 7.27809i	ζ = 0.027
-.21479 ± 3.52461i	ζ = 0.061	-.11033 ± 3.50043i	ζ = 0.032
-.15069 ± 3.44514i	ζ = 0.044	-.18141 ± 3.49792i	ζ = 0.052

there is a trade-off for the added gain. Regardless of the weighting factor applied, modes 28 and 30 never achieved any gain in damping.

Table XVIII lists the eigenvalues of each controller for the run. The instability shown in the overall system eigenvalues, Table XVII, is absent in the individual controller. This is a perfect example of the point mentioned repeatedly in Chapter III that stable controllers do not insure a stable system. Spillover terms do have a noticeable effect. This situation might never have been seen in this study if the modal groupings had not been changed.

Other items of note from Table XVIII include the display of controller symmetry mentioned earlier. In the untransformed system the control and observation portions of each controller yield identical eigenvalues. The loss of this similarity led to postponing the use of different control weightings for each mode. Also visible, in the transformed system, is the loss of controllability in Controller 1 and the loss of observability in Controller 3. This is characteristic of all multiple controllers. If a lower block triangular transformation were used, the loss of controllability would be in Controller 3 and the loss of observability would be in Controller 1. This may be seen by the relationship of the two systems demonstrated earlier in Table XIII. In any case, the first and last controller in any multiple controller will experience a loss of controllability or observability.

The final step was to apply the four controller system and, again, attempt to achieve ten percent closed loop damping on all modes. It was deemed best to keep the rigid body modes in one controller and distribute the remaining modes to the last three controllers. Since

Table XVIII

CSDL 2 Controller Eigenvalue Analysis - 3 Controllers

$q_{rigid} = 2$ $q_{flexible} = 1000$

Modal Assignments

Controller 1: 4, 5, 6
Controller 2: 7, 13, 17, 21, 30
Controller 3: 12, 22, 24, 28
Residual: None

Controller Eigenvalues

Before Transformation	After Transformation
A + BG 1	A + BG 1
-.16093 ± 0.15691i	-.10480 ± 0.10367i
-.14062 ∓ 0.13792i	-.08908 ∓ 0.08838i
-.11454 ∓ 0.11307i	-.00248 ∓ 0.00248i
A - KC 1	A - KC 1
-.16903 ± 0.15691i	-.16093 ± 0.15691i
-.14062 ∓ 0.13792i	-.14062 ∓ 0.13792i
-.11454 ∓ 0.11307i	-.11454 ∓ 0.11307i
A + BG 2	A + BG 2
-.25050 ± 25.0483i	-.25050 ± 25.0483i
-.16457 ∓ 6.10533i	-.12806 ∓ 6.10616i
-.06103 ∓ 5.12126i	-.06072 ∓ 5.12126i
-.50479 ∓ 3.71632i	-.48612 ∓ 3.71848i
-.28750 ∓ 0.73187i	-.23565 ∓ 0.72725i
A - KC 2	A - KC 2
-.25050 ± 25.0483i	-.25050 ± 25.0483i
-.16457 ∓ 6.10533i	-.14468 ∓ 6.10581i
-.06103 ∓ 5.12126i	-.06036 ∓ 5.12128i
-.50479 ∓ 3.71632i	-.42295 ∓ 3.72517i
-.29750 ∓ 0.73187i	-.02015 ∓ 0.71612i
A + BG 3	A + BG 3
-.21691 ± 21.6903i	-.21691 ± 21.6903i
-.69781 ∓ 11.1194i	-.69781 ∓ 11.1194i
-.19501 ∓ 7.27809i	-.19501 ∓ 7.27809i
-.18141 ∓ 3.49791i	-.18141 ∓ 3.49792i
A - KC 3	A - KC 3
-.21691 ± 21.6903i	-.21691 ± 21.6903i
-.69781 ∓ 11.1194i	-.34237 ∓ 11.1357i
-.19501 ∓ 7.27809i	-.13175 ∓ 7.27944i
-.18141 ∓ 3.49791i	-.11033 ∓ 3.50043i

Table XIX

CSDL 2 Overall Eigenvalue Analysis - 4 Controllers

$q_{rigid} = 2.0 \qquad q_{flexible} = 500$

Modal Assignments

Controller 1: 4, 5, 6
Controller 2: 13, 17, 30
Controller 3: 12, 22, 24, 28
Controller 4: 7, 21

Overall System Eigenvalues

Before Transformation			After Transformation		
		Controller 1			
-.4836	± 0.61786i	ζ = 0.783	-.1609	± 0.15691i	ζ = 1.025
-.1619	± 0.45202i	ζ = 0.358	-.1406	± 0.13792i	ζ = 1.019
-.1183	± 0.17730i	ζ = 0.667	-.1145	± 0.11307i	ζ = 1.013
-.1616	± 0.15667i	ζ = 1.031	-.1048	± 0.10367i	ζ = 1.011
-.1399	± 0.13815i	ζ = 1.013	-.0891	± 0.08838i	ζ = 1.008
-.1150	± 0.11353i	ζ = 1.012	-.0025	± 0.00247i	ζ = 1.000
		Controller 2			
-.2505	± 25.0483i	ζ = 0.010	-.2505	± 25.0483i	ζ = 0.010
-.2505	± 25.0483i	ζ = 0.010	-.2505	± 25.0482i	ζ = 0.010
-.0572	± 5.12195i	ζ = 0.011	-.0560	± 5.12133i	ζ = 0.011
-.0556	± 5.12042i	ζ = 0.011	-.0560	± 5.12132i	ζ = 0.011
-.4162	± 3.77756i	ζ = 0.110	-.3002	± 3.73547i	ζ = 0.080
-.2979	± 3.65445i	ζ = 0.082	-.3443	± 3.73217i	ζ = 0.092
		Controller 3			
-.2169	± 21.6903i	ζ = 0.010	-.2169	± 21.6903i	ζ = 0.010
-.2169	± 21.6903i	ζ = 0.010	-.2169	± 21.6903i	ζ = 0.010
-.5136	± 11.1409i	ζ = 0.046	-.3791	± 11.1346i	ζ = 0.034
-.4861	± 11.1122i	ζ = 0.044	-.4795	± 11.1308i	ζ = 0.043
-.1546	± 7.28534i	ζ = 0.021	-.1345	± 7.27940i	ζ = 0.018
-.1399	± 7.27024i	ζ = 0.019	-.1366	± 7.27936i	ζ = 0.019
-.1488	± 3.51413i	ζ = 0.042	-.1080	± 3.50049i	ζ = 0.031
-.1134	± 3.47369i	ζ = 0.033	-.1107	± 3.50042i	ζ = 0.032
		Controller 4			
-.1164	± 6.11656i	ζ = 0.019	-.0745	± 6.10701i	ζ = 0.012
-.1317	± 6.09993i	ζ = 0.022	-.1241	± 6.10624i	ζ = 0.020
-.4323	± 0.85026i	ζ = 0.508	-.2064	± 0.72485i	ζ = 0.285
-.3671	± 0.63277i	ζ = 0.580	-.0072	± 0.71604i	ζ = 0.010

the three controller application had no residuals, a direct conversion of the residuals to a fourth controller was not possible, therefore a little modal rearrangement was in order. To maintain a similarity to the previous tests, two modes were shifted from the second group to form a fourth group. The final groupings were then given by

Group 1: 4, 5, 6

Group 2: 13, 17, 30

Group 3: 12, 22, 24, 28

Group 4: 7, 21

Using a control weighting of 2.0 for the rigid body modes and 500 for the flexible body modes, the overall eigenvalue analysis for a four controller system are given in Table XIX. As in the previous case, the rigid body damping was increased for the rigid body modes. In the flexible modes, no appreciable loss in damping occured, except in the fourth controller where the expected loss in observability was found. A blanket ten percent in damping was unachieveable by uniform increases in the control weighting, again suggesting a reexamination of the modal groupings. Also, modes 28 and 30 were unaffected by any value of q_i from 10 to 15000.

VIII. Conclusions

This investigation demonstrated the feasibility of using multiple controllers in maintaining system stability. It was shown that some closed loop damping was sacrificed in transforming the system to a block triangular form, however, the effects of that loss have not been examined. Modal grouping played a very important part in the system stability achieved and, in the four controller system, allowed an otherwise uncontrollable configuration (CSDL 1) to be stabilized.

The use of angles between modal amplitude vectors is a convenient method for initial grouping of modes, but the rank of the B and C matrices should be examined closely. If they are not of full rank, the modal groups may not be fully compatible as indicated by zero entries in the non-zero singular values of the singular value decomposition.

Loss of controllability and observability in the first and last controllers become more noticeable with the addition of more controllers. This may be the result of the modal assignments used.

The inability to affect the last two modes of the CSDL 2 model suggest that the sensor and actuator placement may not be suitable for controlling those modes. This may be resolved by repositioning the sensors available or adding sensors.

For those cases involving residuals, the residuals were not seriously destabilized, although their general movement was to become less stable. This movement to the right is contrary to what was desired and needs more study.

Overall, the goal of effecting ten percent closed loop damping was successful on the CSDL 1 model and unsuccessful on the CSDL 2 model,

although significant increases were obtained on most modes. Total controller decoupling was achieved while maintaining controller and system stability for both models. The performance of the controller, as well as could be determined without running a forty-four mode simulation, was satisfactory, but did not meet all expectations.

IX. Recommendations

There are several directions that may be taken at this point. The intent of this study was to examine the application and performance of three and four decentralized controllers on the CSDL 2 model, using the CSDL 1 model as a check on the controller algorithm. A re-examination of the modal assignments is in order to find grouping which are more compatible. This compatibility may be determined by receiving non-zero singular values for the singular value decomposition or simply from the fullness of rank of the B_i matrices. Another direction that may be taken is to consider adding a sensor specifically for modes 28 and 30 or redistributing the existing sensors to observe these two modes more directly. These changes are suggested to improve the observability and controllability of the existing system.

A time history of the controller response would be invaluable at this time, as this is the major performance criteria. This investigator was unable to complete such a response. Additionally, the program used may be examined for means to minimize core memory requirements. Finally, the controllers may be expanded to run a higher number of modes. The first forty-four modes are usually used as a fair system representation. These suggestions expand upon the work done to date.

All of the above are either necessary or desirable. At a minimum, these should be accomplished before the feasibility of implementing this system can be fully evaluated.

Bibliography

1. Balas, M.J., "Active Control of Flexible Systems," AIAA Symposium on Dynamics and Control of Large Flexible Spacecraft, Blacksburg, Virginia, June 14, 1977.

2. Sesak, J.R., "Control of Large Space Structures Via Singular Perturbation Optimal Control", AIAA Conference on Large Space Platforms: Future Needs and Capabilities, Los Angeles, California, September 27-29, 1978.

3. Coradetti, T., "Orthogonal Subspace Reduction of Optimal Regulator Order", Proceedings of the AIAA Guidance and Control Conference, Boulder, Colorado, August 6-8, 1979.

4. Strang, Gilbert, Linear Algebra and Its Application, New York, Academic Press, 1976.

5. Calico, Robert A., Jr, and A.M. Janiszewski, "Control Spillover," Proceedings of the Third/VPI/AIAA Symposium on Large Space Structures, Blacksburg, Virginia, June, 1981.

6. Calico, Robert A., Jr, and W. T. Miller, "Decentralized Control for a Flexible Spacecraft," AIAA-82-1414, AIAA/ASS Astrodynamics Conference, San Diego, California, August 9-11, 1982.

7. Miller, William T., "Decentralized Control of Large Space Structures," Unpublished MS Thesis, School of Engineering, Air Force Institute of Technology, Wright-Patterson Air Force Base, December, 1981.

8. Henderson, Timothy, "VCOSS Design Model and Disturbances," Revision Report for CSDL Publication C-5347, Charles Stark Draper Laboratory, Inc., Cambridge, Massachusetts, November 12, 1981.

9. D'Azzo, John J., and C. H. Houpis, Linear Control System Analysis and Design: Conventional and Modern, New York: McGraw-Hill, Inc., 1975.

10. RADC-TR-82-21, ACOSS FIVE (Active Control of Space Structures) Phase 1A. Study conducted by Lockheed Missiles and Space Company, Inc., for the Rome Air Development Center, March 1982.

11. Kleiman, D.L., A Description of Computer Programs for Use in Linear Systems Studies. The University of Connecticut School of Engineering, TR-77-2, Storrs, Connecticut, July, 1977.

12. RADC-TR-81-242, ACOSS EIGHT (Active Control of Space Structures) Phase II. Study conducted by TRW for Rome Air Development Center, September 1981.

Appendix A

CSDL 1 NASTRAN Analysis

Frequencies and Mode Shapes

Nominal Case

$\lambda_1 = 1.3704$

$\omega_1 = 1.1706$

$$\phi_1 = \begin{bmatrix} -2.470E-01 \\ 4.278E-02 \\ 1.451E-06 \\ -1.962E-02 \\ 3.397E-02 \\ -7.213E-02 \\ -3.696E-02 \\ 4.347E-02 \\ 4.397E-02 \\ -1.962E-02 \\ 5.296E-02 \\ 4.396E-02 \end{bmatrix}$$

$\lambda_2 = 2.1515$

$\omega_2 = 1.4668$

$$\phi_2 = \begin{bmatrix} 3.998E-01 \\ 2.309E-01 \\ -1.489E-01 \\ 8.328E-02 \\ 4.808E-02 \\ 6.812E-02 \\ 6.999E-02 \\ 2.252E-02 \\ -4.721E-02 \\ 5.450E-02 \\ 4.936E-02 \\ -4.721E-02 \end{bmatrix}$$

$\lambda_3 = 8.7889$

$\omega_3 = 2.9646$

$$\phi_3 = \begin{bmatrix} 6.367E-02 \\ 3.677E-02 \\ 4.000E-01 \\ 1.983E-01 \\ 1.145E-01 \\ 2.009E-01 \\ 1.547E-01 \\ 6.803E-02 \\ 9.782E-02 \\ 1.362E-01 \\ 1.000E-01 \\ 9.783E-02 \end{bmatrix}$$

$\lambda_4 = 12.657$

$\omega_4 = 3.5578$

$$\phi_4 = \begin{bmatrix} 2.745E-02 \\ -4.757E-02 \\ -2.249E-05 \\ -1.718E-01 \\ 2.977E-01 \\ -6.816E-05 \\ -2.512E-01 \\ 3.435E-01 \\ -8.190E-02 \\ -1.718E-01 \\ 3.894E-01 \\ 8.192E-02 \end{bmatrix}$$

$\lambda_5 = 14.810$

$\omega_5 = 3.8484$

$$\phi_5 = \begin{bmatrix} -8.783E-02 \\ -5.070E-02 \\ -1.298E-01 \\ 3.095E-01 \\ 1.786E-01 \\ -3.514E-01 \\ 2.865E-01 \\ 1.224E-01 \\ 1.139E-02 \\ 2.493E-01 \\ 1.868E-01 \\ 1.140E-02 \end{bmatrix}$$

$\lambda_6 = 26.516$

$\omega_6 = 5.1494$

$$\phi_6 = \begin{bmatrix} 1.353E-05 \\ 1.218E-11 \\ 3.401E-11 \\ -2.041E-01 \\ 3.535E-01 \\ -6.057E-06 \\ -2.041E-01 \\ -3.535E-01 \\ 1.086E-04 \\ 4.082E-01 \\ 6.802E-10 \\ 5.065E-10 \end{bmatrix}$$

$\lambda_7 = 32.216$

$\omega_7 = 5.6759$

$$\phi_7 = \begin{bmatrix} -2.661E-02 \\ 4.606E-02 \\ 3.302E-05 \\ 3.374E-02 \\ -5.844E-02 \\ 3.231E-05 \\ 2.733E-02 \\ -5.481E-02 \\ -4.912E-01 \\ 3.381E-02 \\ -5.108E-02 \\ 4.908E-01 \end{bmatrix}$$

$\lambda_8 = 32.613$

$\omega_8 = 5.7108$

$$\phi_8 = \begin{bmatrix} -2.993E-02 \\ -1.730E-02 \\ 8.784E-02 \\ 4.070E-02 \\ 2.359E-02 \\ 3.553E-02 \\ 2.742E-02 \\ 2.797E-02 \\ -4.874E-01 \\ 3.799E-02 \\ 9.808E-03 \\ -4.878E-01 \end{bmatrix}$$

$\lambda_9 = 79.917$

$\omega_9 = 8.9396$

$$\phi_9 = \begin{bmatrix} 9.906E-02 \\ 5.720E-02 \\ 1.728E-01 \\ 1.075E-01 \\ 6.213E-02 \\ -4.953E-01 \\ -1.678E-01 \\ -2.199E-01 \\ -1.110E-02 \\ -2.743E-01 \\ -3.553E-02 \\ -1.108E-02 \end{bmatrix}$$

$\lambda_{10} = 106.164$ $\lambda_{11} = 119.320$ $\lambda_{12} = 195.068$

$\omega_{10} = 10.3036$ $\omega_{11} = 10.9234$ $\omega_{12} = 13.9667$

$$\phi_{11} = \begin{bmatrix} -3.389E-03 \\ 5.849E-03 \\ -1.605E-05 \\ -2,286E-01 \\ 3.959E-01 \\ 4.963E-05 \\ 3.783E-01 \\ 4.554E-02 \\ -1.470E-02 \\ -2.286E-01 \\ -3.048E-01 \\ 1.471E-02 \end{bmatrix} \quad \phi_{12} = \begin{bmatrix} 6.369E-02 \\ 3.677E-02 \\ 9.588E-02 \\ -2.400E-01 \\ -1.385E-01 \\ -2.604E-01 \\ -8.605E-02 \\ 3.944E-01 \\ 6.969E-03 \\ 2.984E-01 \\ -2.719E-01 \\ 6.970E-03 \end{bmatrix} \quad \phi_{13} = \begin{bmatrix} 3.205E-02 \\ 1.851E-02 \\ 6.438E-02 \\ -4.025E-01 \\ -2.324E-01 \\ -1.304E-01 \\ 3.203E-01 \\ -1.587E-01 \\ -9.277E-03 \\ 2.271E-02 \\ 3.568E-01 \\ -9.281E-03 \end{bmatrix}$$

$\phi^T D$ Matrix (12 x 6)

		Actuator (Sensor)					
		1	2	3	4	5	6
Mode	1	0.0440	-.0440	-.0670	-.0230	0.0230	0.0670
	2	-.0690	-.0690	-.0170	0.1120	0.1120	-.0170
	3	-.0460	-.0460	-.2710	0.0770	0.0770	-.2710
	4	0.2490	-.2490	-.0600	0.1890	-.1890	0.0600
	5	0.3510	0.3510	-.0490	0.1560	0.1560	-.0490
	6	0.2890	-.2890	0.2890	-.2890	0.2890	-.2890
	7	0.0490	-.0490	-.3690	-.3200	0.3200	0.3690
	8	-.0690	-.0690	0.2990	0.3650	0.3650	0.2990
	9	0.2310	0.2310	0.2500	-.2290	-.2290	0.2500
	10	0.3170	-.3170	-.1500	0.1670	-.1670	0.1500
	11	0.2200	0.2200	-.1460	0.1450	0.1450	-.1460
	12	0.1140	0.1140	-.0132	0.0248	0.0248	-.0132

Appendix B

CSDL 2 NASTRAN Analysis

$\Phi^T D$ Matrix (12 x 21)

Actuator (Sensor)

Mode	1	2	3	4	5	6
4	.004775	.004876	-.04429	0.0	.004775	.004876
5	.000001	.003619	.003618	-.004642	.000001	-.003618
6	-.006023	.000267	.000266	-.008232	.006023	-.000266
7	.000026	-.001570	-.001533	-.002816	-.000026	.001569
12	-.000452	-.000859	-.000903	.010104	.000432	.000869
13	-.016036	-.002018	.006244	.000073	-.016045	-.002002
17	.000811	-.000616	-.000255	.000002	.000812	.000619
21	-.001659	-.001165	.000520	-.001659	.001649	.001152
22	.000981	-.002849	-.000347	-.001226	.000980	.002859
24	.019403	.005697	.005622	-.017699	.019407	.005625
28	0.0	-.000004	.000001	-.000003	-.000003	-.000005
30	-.000003	.00010	.000015	-.000005	-.000009	.000008

	7	8	9	10	11	12
4	.004429	0.0	-.013837	.003015	.002568	-.013837
5	-.003619	.013451	-.000002	.003619	.003618	.000002
6	-.000266	-.003888	-.006023	.000266	.000266	.006023
7	.001532	-.006275	-.000098	-.001565	-.001541	-.000096
12	.000927	-.01977	-.000531	-.000880	-.000909	.000536
13	.006278	-.000012	.000644	-.000401	.004628	.000688
17	-.000257	0.0	.000085	-.000550	.000331	-.000086
21	-.000527	.001115	-.001645	-.000847	-.000291	-.006164
22	.003478	.000638	-.000292	-.002955	-.003584	.000293
24	-.00568	.001840	.00295	-.003584	.004155	-.002891
28	.00001	0.0	-.000008	.000001	-.000004	-.000008
30	.000016	0.0	-.000004	.000018	.000016	-.000004

Actuator (Sensor)

Mode	13	14	15	16	17	18
4	.003015	-.002568	.009529	.009259	0.0	-.013837
5	-.003618	-.003619	.003620	-.003617	.013452	-.000002
6	-.000266	-.000266	.000266	-.000266	.015687	-.006023
7	.001563	.001540	-.001585	.001583	-.006567	.000089
12	-.000891	.000928	-.000822	.000824	-.000105	-.000570
13	-.000382	.004658	-.006268	-.006263	.000033	.000658
17	-.000552	-.000333	-.000810	-.000812	0.0	-.000085
21	.000840	-.000291	-.002043	.002030	-.004348	.001618
22	.002965	.003389	-.002561	.002570	.001357	-.000201
24	.003542	-.004167	-.011645	.011593	-.008292	.002726
28	0.0	-.000003	.000004	.000003	0.0	-.000009
30	.000016	.000016	.000023	.000018	0.0	-.000005

	19	20	21
4	-.009082	-.013837	-.009082
5	.003617	-.00002	-.003620
6	.000266	.006023	-.000266
7	-.001520	-.000088	.001519
12	-.000940	.000577	.000970
13	.010503	.000686	.010546
17	-.000073	-.000086	-.000075
21	.001328	-.001622	-.001337
22	-.003782	.000206	.003795
24	.011238	-.002757	-.011342
28	-.000009	-.000009	.000007
30	.000011	-.000004	.000014

Appendix C

Main Program Listing

AD A124 702 DECENTRALIZED CONTROL OF A LARGE SPACE STRUCTURE AS APPLIED TO THE CSDL 2 MODEL(U) AIR FORCE INST OF TECH WRIGHT-PATTERSON AFB OH SCHOOL OF ENGI.. E S ALDRIDGE 2/2

UNCLASSIFIED DEC 82 AFIT/GA/AA/82D-1 F/G 22/2 NL

END

DATE FILMED

DTIC

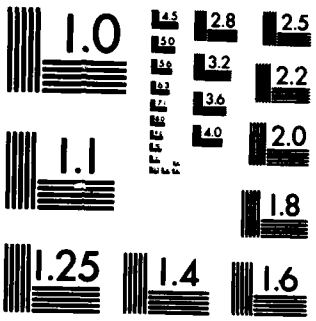

MICROCOPY RESOLUTION TEST CHART
NATIONAL BUREAU OF STANDARDS-1963-A

```
      PROGRAM ACOSS2(INPUT,OUTPUT,TAPE8,TAPE6)
C
C  THIS PROGRAM GENERATES AN UPPER TRIANGULAR TRANSFORMATION
C
      REAL A1(21,21),A2(21,21),A3(21,21),A4(21,21)
      REAL B1(21,21),B2(21,21),B3(21,21),B4(21,21)
      REAL C1(21,21),C2(21,21),C3(21,21),C4(21,21)
      REAL CTCC1(21,21),CTCC2(21,21),CTCC3(21,21),CTCC4(21,21)
      REAL SAT(21,21),SAT2(21,21),SAT3(21,21),SAT4(21,21)
      REAL AKC(21,21),ACT(21,21),BCG(21,21),KCC(21,21)
      REAL P(21,21),S(21,21)
      REAL QA1(21,21),QA2(21,21),QA3(21,21),QA4(21,21)
      RFAL QOB1(21,21),QOB2(21,21),QOB3(21,21),QOB4(21,21)
      REAL ACG1(21,21),ACG2(21,21),ACG3(21,21),ACG4(21,21)
      REAL ABG1(21,21),ABG2(21,21),ABG3(21,21),ABG4(21,21)
      REAL GAIN1(21,21),GAIN2(21,21),GAIN3(21,21),GAIN4(21,21)
      REAL KT1(21,21),KT2(21,21),KT3(21,21),KT4(21,21)
      REAL KOB1(21,21),KOB2(21,21),KOB3(21,21),KOB4(21,21)
      REAL GAMMA4(21,21),GAMMA2(21,21),GAMMA3(21,21)
      REAL T2(21,21),T3(21,21),T1(21,21)
      REAL TRT(21,21),TEN(21,21),CT(21,21),V(21,21)
      REAL RK(21,21),RK4(21,21),RK2(21,21),RK3(21,21)
      REAL RG2(21,21),RG3(21,21),RG1(21,21)
      REAL MAJM(58,58),D(17),XO(58),W(17),TOL,DT
      REAL ZETA,AA(17),BB(17),SING(21),XTR(21,21),X1(58)
      REAL EAT(58,58),EAT2(58,58),WORK(58,58),STOR(21,21)
      REAL PHIA(21,21),PHIS(21,21),MODE(2,21),INIT(4,21)
      INTEGER N,N2,NC1,NC2,NC3,NC12,NC22,NC32,NR,NR2
      INTEGER IC1(17),IC2(17),IC3(17),I,J,K,L,M,KK,LL,MM
      INTEGER DEC,Q,NACT,NSEN,IR(17),IER,SKIP,NCOL,NCOL1
      INTEGER NDA,NDIM,NDA1,NDIM1,ZZ,E2,E3,E4,P1,P2,P3
      COMPLEX Z(58),W1(12)
      COMMON/MAINA/NDA,NDA1,WORK
      COMMON/MAINB/NCOL,NCOL1
      COMMON/MAIN1/NDIM,NDIM1,TEN,X(3364)
      COMMON/MAIN2/STOR
      COMMON/MAIN3/XTR
      COMMON/SAVE/T(100),TS(100)
      COMMON/INOUT/KOUT,TAPE
      COMMON/NUM/IC1,IC2,IC3,IR,NC1,NC2,NC3,NR
C
C
C  INITIALIZATIONS
C
C
      NDIM = 12
      NDIM1 = 13
      NCOL = 21
      NCOL1 = 22
      NDA = 58
      NDA1 = 59
      KOUT = 6
      TAPE = 9
      Q = 0
```

```
      IER = 0
      ZZ = 0
C
C
      PRINT'(////)'
      PRINT*,'     ********************************************** '
      PRINT*,'     *****                                      ***** '
      PRINT*,'     *****   3 4 U P P E R - R E S I D U A L    ***** '
      PRINT*,'     *****                                      ***** '
      PRINT*,'     *****             B L C C K                ***** '
      PRINT*,'     *****                                      ***** '
      PRINT*,'     *****           C S D L   I I              ***** '
      PRINT*,'     *****                                      ***** '
      PRINT*,'     ********************************************** '
      PRINT'(//)'
      PRINT*,' THIS PROGRAM GENERATES A SOLUTION',
     *       ' USING AN UPPER TRIANGULAR TRANSFORMATION '
      PRINT'(////)'
C
C
C
C
C  INITIAL SELECTION FOR THREE OR FOUR CONTROLLERS
C
C
      PRINT*,' FOR A THREE CONTROLLER RUN, ENTER 3, OR, '
      PRINT*,' FOR A FOUR  CONTROLLER RUN, ENTER 4     >'
      READ(8,*) DEC
C
C  DEC DEFAULT SWITCH
C
      IF (DEC.NE.4) DEC = 3
      PRINT*,' '
      PRINT*,'    THIS IS A ',DEC,' CONTROLLER RUN '
C
C
C  PHI MATRICES AND CONTROLLER ENTRIES
C
C
      PRINT'(///)'
      IF (DEC.EQ.3) THEN
      PRINT*,' ENTER NC1,NC2,NC3,NR,NACT,NSEN,ZETA  >'
      ELSE
      PRINT*,' ENTER NC1,NC2,NC3,NC4,NACT,NSEN,ZETA  >'
      ENDIF
      READ(8,*) NC1,NC2,NC3,NR,NACT,NSEN,ZETA
      PRINT*,NC1,NC2,NC3,NR,NACT,NSEN,ZETA
      PRINT*,' '
      PRINT*,' ENTER THE ',NACT,' ELEMENTS FOR EACH PHIA '
      PRINT*,' '
      N = NC1 + NC2 + NC3 + NR
      DO 1 I=1,N
      PRINT*,'ENTER PHIA ',I,' >'
      READ(8,*) (PHIA(I,J),J=1,NACT)
```

```
      PRINT*,'                    ',(PHIA(I,J),J=1,NACT)
 1    CONTINUE
      PRINT'(//)'
      PRINT*,' ENTER THE ',NSEN,' ELEMENTS FOR EACH PHIS '
      PRINT*,' '
      DO 2 I=1,N
      PRINT*,'ENTER PHIS ',I,' >'
      READ(8,*) (PHIS(I,J),J=1,NSEN)
      PRINT*,'                    ',(PHIS(I,J),J=1,NSEN)
 2    CONTINUE
      PRINT'(//)'
C
C
C  OMEGAS
C
C
      PRINT*, ' ENTER THE VALUE FOR EACH OMEGA '
      PRINT*,' '
      DO 3 I=1,N
      PRINT*,'ENTER OMEGA ',I,' >'
      READ(8,*) W(I)
      PRINT*,'                    ',W(I)
      D(I) = -2. * ZETA * W(I)
 3    CONTINUE
C
C
C
 20   CONTINUE
C
C
C  SECONDARY SELECTION FOR THREE OR FOUR CONTROLLERS, TO
C  BE USED FOR RUNS AFTER THE FIRST JOB
C
C
      IF (Q.EQ.2) THEN
      PRINT*,' FOR A THREE CONTROLLER RUN, ENTER 3, OR, '
      PRINT*,' FOR A FOUR  CONTROLLER RUN, ENTER 4     >'
      READ(8,*) DEC
C
C  DEC DEFAULT SWITCH
C
      IF (DEC.NE.4) DEC = 3
      PRINT*,' '
      PRINT*,'    THIS IS A ',DEC,' CONTROLLER RUN '
      PRINT'(//)'
C
C
      IF (DEC.EQ.3) THEN
      PRINT*,' ENTER THE VALUES OF NC1,NC2,NC3,NR >'
      ELSE
      PRINT*,' ENTER THE VALUES OF NC1,NC2,NC3,NC4  >'
      ENDIF
      READ(8,*) NC1,NC2,NC3,NR
      PRINT*,NC1,NC2,NC3,NR
```

```
      PRINT'(//)'
      ENDIF
C
C
      PRINT*,' THE FOLLOWING MODES ARE ENTERED ACCORDING TO THE '
      PRINT*,' ORDER IN WHICH THEY ARE ENTERED IN THE DATA FILE '
      PRINT*,' AND NOT ACCORDING TO THEIR ACTUAL MODE NUMBER. '
      PRINT'(//)'
      PRINT*,' ENTER THE ',NC1,' CONTROLLER 1 MODES >'
      READ(8,*) (IC1(I),I=1,NC1)
      PRINT*,'      ',(IC1(I),I=1,NC1)
      PRINT*,' '
      PRINT*,' ENTER THE ',NC2,' CONTROLLER 2 MODES >'
      READ(8,*) (IC2(I),I=1,NC2)
      PRINT*,'      ',(IC2(I),I=1,NC2)
      PRINT*,' '
      PRINT*,' ENTER THE ',NC3,' CONTROLLER 3 MODES >'
      READ(8,*) (IC3(I),I=1,NC3)
      PRINT*,'      ',(IC3(I),I=1,NC3)
      PRINT*,' '
      IF (DEC.EQ.3) THEN
      PRINT*,' ENTER THE ',NR,' RESIDUAL MODES >'
      ELSE
      PRINT*,' ENTER THE ',NR,' CONTROLLER 4 MODES >'
      ENDIF
      READ(8,*) (IR(I),I=1,NR)
      PRINT*,'      ',(IR(I),I=1,NR)
      PRINT*,' '
C
C
      NC12 = 2 * NC1
      NC22 = 2 * NC2
      NC32 = 2 * NC3
      N2 = 2 * N
      NR2 = 2 * NR
      IF (DEC.EQ.3) THEN
      M = 2 * NC12 + 2 * NC22 + 2 * NC32 + NR2
      ELSE
      M = 2 * NC12 + 2 * NC22 + 2 * NC32 + 2 * NR2
      ENDIF
 100  CONTINUE
      PRINT*,' TO PRINT ALL OF THE MATRICES ENTER 1, ELSE ENTER 0 >'
      READ(8,*) Q
      PRINT'(///)'
C
C
C  READ IN THE WEIGHTING MATRIX
C  DIAGONAL VALUE FOR EACH MODE
C
C
      PRINT*,' ENTER THE DIAGONAL VALUES, IN MODE INPUT '
      PRINT*,' ORDER, FOR THE CONTROL WEIGHTING MATRIX >'
      READ(8,*) (AA(I),I=1,N)
      PRINT*,' '
```

```
      PRINT*,(AA(I),I=1,N)
      PRINT'(//)'
C
      PRINT*,' ENTER THE DIAGONAL VALUES, IN MODE INPUT '
      PRINT*,' ORDER, FOR THE OBSERVER WEIGHTING MATRIX >'
      READ(8,*) (BB(I),I=1,N)
      PRINT*,' '
      PRINT*,(BB(I),I=1,N)
      PRINT'(///)'
C
C
C  FORMING THE A,B,C AND WEIGHTING MATRICES
C
C
      CALL FORMA(A1,D,W,NC1,NC12,IC1)
      CALL FORMB(B1,PHIA,NC1,NC12,NACT,IC1)
      CALL FORMC(C1,PHIS,NC1,NC12,NSEN,IC1)
      CALL FORMA(A2,D,W,NC2,NC22,IC2)
      CALL FORMB(B2,PHIA,NC2,NC22,NACT,IC2)
      CALL FORMC(C2,PHIS,NC2,NC22,NSEN,IC2)
      CALL FORMA(A3,D,W,NC3,NC32,IC3)
      CALL FORMB(B3,PHIA,NC3,NC32,NACT,IC3)
      CALL FORMC(C3,PHIS,NC3,NC32,NSEN,IC3)
      CALL FORMA(A4,D,W,NR,NR2,IR)
      CALL FORMB(B4,PHIA,NR,NR2,NACT,IR)
      CALL FORMC(C4,PHIS,NR,NR2,NSEN,IR)
      CALL FORMQ(QA1,AA,NC1,IC1)
      CALL FORMQ(QOB1,BB,NC1,IC1)
      CALL FORMQ(QA2,AA,NC2,IC2)
      CALL FORMQ(QOB2,BB,NC2,IC2)
      CALL FORMQ(QA3,AA,NC3,IC3)
      CALL FORMQ(QOB3,BB,NC3,IC3)
      IF (DEC.EQ.4) THEN
      CALL FORMQ(QA4,AA,NR,IR)
      CALL FORMQ(QOB4,BB,NR,IR)
      ENDIF
C
C
C  PRINTING THE A,B,C AND WEIGHTING MATRICES
C
C
      IF (Q.EQ.1) THEN
      PRINT*,' THE CONTROLLER 1 A MATRIX IS '
      CALL PRNT(A1,NC12,NC12)
      PRINT*,' THE CONTROLLER 1 B MATRIX IS '
      CALL PRNT(B1,NC12,NACT)
      PRINT*,' THE CONTROLLER 1 C MATRIX IS '
      CALL PRNT (C1,NSEN,NC12)
      PRINT*,' THE C1 CONTROL WEIGHTING MATRIX IS '
      CALL PRNT(QA1,NC12,NC12)
      PRINT*,' THE C1 OBSERVER WEIGHTING MATRIX IS '
      CALL PRNT(QOB1,NC12,NC12)
      PRINT*,' THE CONTROLLER 2 A MATRIX IS '
      CALL PRNT(A2,NC22,NC22)
```

```
      PRINT*,' THE CONTROLLER 2 B MATRIX IS '
      CALL PRNT(B2,NC22,NACT)
      PRINT*,' THE CONTROLLER 2 C MATRIX IS '
      CALL PRNT (C2,NSEN,NC22)
      PRINT*,' THE C2 CONTROL WEIGHTING MATRIX IS '
      CALL PRNT(QA2,NC22,NC22)
      PRINT*,' THE C2 OBSERVER WEIGHTING MATRIX IS '
      CALL PRNT(QOB2,NC22,NC22)
      PRINT*,' THE CONTROLLER 3 A MATRIX IS '
      CALL PRNT(A3,NC32,NC32)
      PRINT*,' THE CONTROLLER 3 B MATRIX IS '
      CALL PRNT(B3,NC32,NACT)
      PRINT*,' THE CONTROLLER 3 C MATRIX IS '
      CALL PRNT (C3,NSEN,NC32)
      PRINT*,' THE C3 CONTROL WEIGHTING MATRIX IS '
      CALL PRNT(QA3,NC32,NC32)
      PRINT*,' THE C3 OBSERVER WEIGHTING MATRIX IS '
      CALL PRNT(QOB3,NC32,NC32)
C
      IF (DEC.EQ.3) THEN
C
      IF (NR.EQ.0) THEN
      PRINT*,' NO RESIDUAL TERMS '
      GOTO 115
      ENDIF
C
      PRINT*,' THE A RESIDUAL MATRIX IS '
      CALL PRNT(A4,NR2,NR2)
      PRINT*,' THE B RESIDUAL MATRIX IS '
      CALL PRNT(B4,NR2,NACT)
      PRINT*,' THE C RESIDUAL MATRIX IS '
      CALL PRNT (C4,NSEN,NR2)
      ELSE
      PRINT*,' THE CONTROLLER 4 A MATRIX IS '
      CALL PRNT(A4,NR2,NR2)
      PRINT*,' THE CONTROLLER 4 B MATRIX IS '
      CALL PRNT(B4,NR2,NACT)
      PRINT*,' THE CONTROLLER 4 C MATRIX IS '
      CALL PRNT (C4,NSEN,NR2)
      PRINT*,' THE C4 CONTROL WEIGHTING MATRIX IS '
      CALL PRNT(QA4,NR2,NR2)
      PRINT*,' THE C4 OBSERVER WEIGHTING MATRIX IS '
      CALL PRNT(QOB4,NR2,NR2)
      ENDIF
C
      ENDIF
C
 115  CONTINUE
C
C
C THIS SECTION GENERATES THE RICCATI SOLUTIONS
C AND THE GAIN MATRICES OF EACH CONTROLLER
C
C
```

```
      IF (ZZ.EQ.0) THEN
      CALL VMULFP(B1,B1,NC12,NACT,NC12,NCOL,NCOL,SAT,NCOL,IER)
      ENDIF
      CALL VMULFM(C1,C1,NSEN,NC12,NC12,NCOL,NCOL,CTCC1,NCOL,IER)
120   CONTINUE
      IER = 0
      TOL = 0.001
      PRINT*,' THE FOLLOWING ARE THE MRIC A+BG 1 INPUTS '
      PRINT'(//)'
      PRINT*,' MATRIX A1 IS '
      CALL PRNT(A1,NC12,NC12)
      PRINT*,' MATRIX SAT (B1*B1T) IS '
      CALL PRNT(SAT,NC12,NC12)
      PRINT*,' MATRIX QA1 IS '
      CALL PRNT(QA1,NC12,NC12)
      PRINT*,' NC12 = ',NC12
      PRINT'(//)'
      CALL MRIC(NC12,A1,SAT,QA1,S,ABG1,TOL,IER)
      IF (ZZ.EQ.0) THEN
      PRINT*,' THE RICCATI SOLUTION OF AC + BCG #1 IS '
      PRINT*,' IER = ',IER
      CALL PRNT(S,NC12,NC12)
      ENDIF
      CALL VMULFM(B1,S,NC12,NACT,NC12,NCOL,NCOL,GAIN1,NCOL,IER)
      IF (ZZ.EQ.1) THEN
      CALL VMULFM(T1,GAIN1,NACT,E4,NC12,NCOL,NCOL,STOR,NCOL,IER)
      CALL MMUL(RG1,STOR,E4,E4,NC12,TEN)
      CALL MMUL(T1,TEN,NACT,E4,NC12,GAIN1)
      PRINT*,' THE G1* GAIN MATRIX IS '
      ELSE
      PRINT*,' THE G1 GAIN MATRIX IS '
      ENDIF
      CALL PRNT (GAIN1,NACT,NC12)
      IER = 0
      TOL = 0.001
      CALL TFR(ACT,A1,NC12,NC12,1,2)
      PRINT*,' THE FOLLOWING ARE THE MRIC A-KC 1 INPUTS '
      PRINT'(//)'
      PRINT*,' THE MATRIX A1 TRANSPOSE IS '
      CALL PRNT(ACT,NC12,NC12)
      PRINT*,' THE MATRIX CTCC1 (C1T*C1) IS '
      CALL PRNT(CTCC1,NC12,NC12)
      PRINT*,' THE MATRIX QOB1 IS '
      CALL PRNT(QOB1,NC12,NC12)
      PRINT*,' NC12 = ',NC12
      PRINT'(//)'
      CALL MRIC(NC12,ACT,CTCC1,QOB1,P,ACG1,TOL,IER)
      IF (ZZ.EQ.0) THEN
      PRINT*,' THE RICCATI SOLUTION OF AC - KCC #1 IS '
      CALL PRNT(P,NC12,NC12)
      ENDIF
      CALL MMUL(C1,P,NSEN,NC12,NC12,KT1)
      PRINT*,' THE K1 GAIN MATRIX IS '
      CALL TFR(KOB1,KT1,NSEN,NC12,1,2)
```

```
      CALL PRNT(KOB1,NC12,NSEN)
125   CONTINUE
      IF (ZZ.EQ.0) THEN
      CALL VMULFP(B2,B2,NC22,NACT,NC22,NCOL,NCOL,SAT2,NCOL,IER)
      CALL VMULFM(C2,C2,NSEN,NC22,NC22,NCOL,NCOL,CTCC2,NCOL,IER)
      ENDIF
140   CONTINUE
      IER = 0
      TOL = 0.001
      PRINT*,' THE FOLLOWING ARE THE MRIC A+BG 2 INPUTS '
      PRINT'(//)'
      PRINT*,' THE MATRIX A2 IS '
      CALL PRNT(A2,NC22,NC22)
      PRINT*,' THE MATRIX SAT2 (B2*B2T) IS '
      CALL PRNT(SAT2,NC22,NC22)
      PRINT*,' THE MATRIX QA2 IS '
      CALL PRNT(QA2,NC22,NC22)
      PRINT*,' NC22 = ',NC22
      PRINT'(//)'
      CALL MRIC(NC22,A2,SAT2,QA2,S,ABG2,TOL,IER)
      IF (ZZ.EQ.0) THEN
      PRINT*,' THE RICCATI SOLUTION OF AC + BCG #2 IS '
      PRINT*,' IER = ',IER
      CALL PRNT(S,NC22,NC22)
      ENDIF
      CALL VMULFM(B2,S,NC22,NACT,NC22,NCOL,NCOL,GAIN2,NCOL,IER)
      IF (ZZ.EQ.1) THEN
      CALL VMULFM(T2,GAIN2,NACT,E3,NC22,NCOL,NCOL,STOR,NCOL,IER)
      CALL MMUL(RG2,STOR,E3,E3,NC22,TEN)
      CALL MMUL(T2,TEN,NACT,E3,NC22,GAIN2)
      PRINT*,' THE G2* GAIN MATRIX IS '
      ELSE
      PRINT*,' THE G2 GAIN MATRIX IS '
      ENDIF
      CALL PRNT (GAIN2,NACT,NC22)
      IER = 0
      TOL = 0.001
      CALL TFR(ACT,A2,NC22,NC22,1,2)
      PRINT*,' THE FOLLOWING ARE THE MRIC A-KC 2 INPUTS '
      PRINT'(//)'
      PRINT*,' THE MATRIX A2 TRANSPOSE IS '
      CALL PRNT(ACT,NC22,NC22)
      PRINT*,' THE MATRIX CTCC2 (C2T*C2) IS '
      CALL PRNT(CTCC2,NC22,NC22)
      PRINT*,' THE MATRIX QOB2 IS '
      CALL PRNT(QOB2,NC22,NC22)
      PRINT*,' NC22 = ',NC22
      PRINT'(//)'
      CALL MRIC(NC22,ACT,CTCC2,QOB2,P,ACG2,TOL,IER)
      IF (ZZ.EQ.0) THEN
      PRINT*,' THE RICCATI SOLUTION OF AC - KCC #2 IS '
      CALL PRNT(P,NC22,NC22)
      ENDIF
      CALL MMUL(C2,P,NSEN,NC22,NC22,KT2)
```

```
      IF (ZZ.EQ.1) THEN
      CALL VMULFP(RK2,GAMMA2,P3,P3,NSEN,NCOL,NCOL,STOR,NCOL,IER)
      CALL MMUL(STOR,KT2,P3,NSEN,NC22,KCC)
      CALL MMUL(GAMMA2,KCC,NSEN,P3,NC22,KT2)
      PRINT*,' THE K2* GAIN MATRIX IS '
      ELSE
      PRINT*,' THE K2 GAIN MATRIX IS '
      ENDIF
      CALL TFR(KOB2,KT2,NSEN,NC22,1,2)
      CALL PRNT(KOB2,NC22,NSEN)
145   CONTINUE
      IF (ZZ.EQ.0.OR.DEC.EQ.3) THEN
      CALL VMULFP(B3,B3,NC32,NACT,NC32,NCOL,NCOL,SAT3,NCOL,IER)
      ENDIF
      IF (ZZ.EQ.0) THEN
      CALL VMULFM(C3,C3,NSEN,NC32,NC32,NCOL,NCOL,CTCC3,NCOL,IER)
      ENDIF
150   CONTINUE
      IER = 0
      TOL = 0.001
      PRINT*,' THE FOLLOWING ARE THE MRIC A+BG 3 INPUTS '
      PRINT'(//)'
      PRINT*,' THE MATRIX A3 IS '
      CALL PRNT(A3,NC32,NC32)
      PRINT*,' THE MATRIX SAT3 (B3*B3T) IS '
      CALL PRNT(SAT3,NC32,NC32)
      PRINT*,' THE MATRIX QA3 IS '
      CALL PRNT(QA3,NC32,NC32)
      PRINT*,' NC32 = ',NC32
      PRINT'(//)'
      CALL MRIC(NC32,A3,SAT3,QA3,S,ABG3,TOL,IER)
      IF (ZZ.EQ.0) THEN
      PRINT*,' THE RICCATI SOLUTION OF AC + BCG #3 IS '
      PRINT*,' IER = ',IER
      CALL PRNT(S,NC32,NC32)
      ENDIF
      CALL VMULFM(B3,S,NC32,NACT,NC32,NCOL,NCOL,GAIN3,NCOL,IER)
      IF (ZZ.EQ.1.AND.DEC.EQ.4) THEN
      CALL VMULFM(T3,GAIN3,NACT,E2,NC32,NCOL,NCOL,STOR,NCOL,IER)
      CALL MMUL(RG3,STOR,E2,E2,NC32,TEN)
      CALL MMUL(T3,TEN,NACT,E2,NC32,GAI'3)
      PRINT*,' THE G3* GAIN MATRIX IS '
      ELSE
      PRINT*,' THE G3 GAIN MATRIX IS '
      ENDIF
      CALL PRNT (GAIN3,NACT,NC32)
      IER = 0
      TOL = 0.001
      CALL TFR(ACT,A3,NC32,NC32,1,2)
      PRINT*,' THE FOLLOWING ARE THE MRIC A-KC 3 INPUTS '
      PRINT'(//)'
      PRINT*,' THE MATRIX A3 TRANSPOSE IS '
      CALL PRNT(ACT,NC32,NC32)
      PRINT*,' THE MATRIX CTCC3 (C3T*C3) IS '
```

```
      CALL PRNT(CTCC3,NC32,NC32)
      PRINT*,' THE MATRIX QOB3 IS '
      CALL PRNT(QOB3,NC32,NC32)
      PRINT*,' NC32 = ',NC32
      PRINT'(//)'
      CALL MRIC(NC32,ACT,CTCC3,QOB3,P,ACG3,TOL,IER)
      IF (ZZ.EQ.0) THEN
      PRINT*,' THE RICCATI SOLUTION OF AC - KCC #3 IS '
      CALL PRNT(P,NC32,NC32)
      ENDIF
      CALL MMUL(C3,P,NSEN,NC32,NC32,KT3)
      IF (ZZ.EQ.1) THEN
      CALL VMULFP(RK3,GAMMA3,P2,P2,NSEN,NCOL,NCOL,STOR,NCOL,IER)
      CALL MMUL(STOR,KT3,P2,NSEN,NC32,KCC)
      CALL MMUL(GAMMA3,KCC,NSEN,P2,NC32,KT3)
      PRINT*,' THE K3* GAIN MATRIX IS '
      ELSE
      PRINT*,' THE K3 GAIN MATRIX IS '
      ENDIF
      CALL TFR(KOB3,KT3,NSEN,NC32,1,2)
      CALL PRNT(KOB3,NC32,NSEN)
155   CONTINUE
      IF (DEC.EQ.4) THEN
      CALL VMULFP(B4,B4,NR2,NACT,NR2,NCOL,NCOL,SAT4,NCOL,IER)
      IF (ZZ.EQ.0) THEN
      CALL VMULFM(C4,C4,NSEN,NR2,NR2,NCOL,NCOL,CTCC4,NCOL,IER)
      ENDIF
160   CONTINUE
      IER = 0
      TOL = 0.001
      CALL MRIC(NR2,A4,SAT4,QA4,S,ABG4,TOL,IER)
      IF (ZZ.EQ.0) THEN
      PRINT*,' THE RICCATI SOLUTION OF AC + BCG #4 IS '
      PRINT*,' IER = ',IER
      CALL PRNT(S,NR2,NR2)
      ENDIF
      CALL VMULFM(B4,S,NR2,NACT,NR2,NCOL,NCOL,GAIN4,NCOL,IER)
      PRINT*,' THE G4 GAIN MATRIX IS '
      CALL PRNT (GAIN4,NACT,NR2)
      IER = 0
      TOL = 0.001
      CALL TFR(ACT,A4,NR2,NR2,1,2)
      CALL MRIC(NR2,ACT,CTCC4,QOB4,P,ACG4,TOL,IER)
      CALL MMUL(C4,P,NSEN,NR2,NR2,KT4)
      IF (ZZ.EQ.1) THEN
      CALL VMULFP(RK4,GAMMA4,P1,P1,NSEN,NCOL,NCOL,STOR,NCOL,IER)
      CALL MMUL(STOR,KT4,P1,NSEN,NR2,KCC)
      CALL MMUL(GAMMA4,KCC,NSEN,P1,NR2,KT4)
      PRINT*,' THE K4* GAIN MATRIX IS '
      ELSE
      PRINT*,' THE K4 GAIN MATRIX IS '
      ENDIF
      CALL TFR(KOB4,KT4,NSEN,NR2,1,2)
      CALL PRNT(KOB4,NR2,NSEN)
```

```
 165  CONTINUE
      ENDIF
C
C
C  THIS SECTION GENERATES THE BLOCK SEGMENTS
C  OF MAJM AND PUTS THEM INTO THE MAJM MATRIX
C
C  THE THREE CONTROLLER MATRIX WILL CONTAIN
C  RESIDUAL TERMS (SEE DIAGRAM BELOW).
C
C  THE FOUR CONTROLLER MATRIX DOES NOT
C  CONTAIN RESIDUALS (YET).
C
C  THE THREE CONTROLLER MAJM MATRIX WITH
C  RESIDUALS WILL LOOK LIKE:
C
C  ****                                                          ****
C  *                                                                *
C  *  A1+BG1    B1G1     B1G2     B1G2     B1G3     B1G3     0      *
C  *                                                                *
C  *    0      A1-KC1    K1C2      0       K1C3      0      K1CR    *
C  *                                                                *
C  *   B2G1     B2G1    A2+BG2    B2G2     B2G3     B2G3     0      *
C  *                                                                *
C  *   K2C1      0        0      A2-KC2    K2C3      0      K2CR    *
C  *                                                                *
C  *   B3G1     B3G1     B3G2     B3G2    A3+BG3    B3G3     0      *
C  *                                                                *
C  *   K3C1      0       K3C2      0        0      A3-KC3   K3CR    *
C  *                                                                *
C  *   BRG1     BRG1     BRG2     BRG2     BRG3     BRG3     AR     *
C  *                                                                *
C  ****                                                          ****
C
C
C
      K = 2 * NC12
      KK = K + NC22
      L = 2 * NC22 + K
      LL = L + NC32
      P1 = 2 * NC32 + L
      IF (DEC.EQ.3) THEN
      MM = 2*NC12 + 2*NC22 + 2*NC32 + NR2
      ELSE
      MM = 2*NC12 + 2*NC22 + 2*NC32 + 2*NR2
      P2 = P1 + NR2
      ENDIF
C
      DO 200 I=1,MM
      DO 200 J=1,MM
 200  MAJM(I,J) = 0.0
      DO 201 I=1,NC12
      DO 201 J=1,NC12
 201  MAJM(I,J) = ABG1(I,J)
```

```
      DO 202 I=1,NC22
      DO 202 J=1,NC22
202   MAJM(I+K,J+K) = ABG2(I,J)
      DO 203 I=1,NC32
      DO 203 J=1,NC32
203   MAJM(I+L,J+L) = ABG3(I,J)
      CALL TFR(AKC,ACG1,NC12,NC12,1,2)
      DO 204 I=1,NC12
      DO 204 J=1,NC12
204   MAJM(I+NC12,J+NC12) = AKC(I,J)
      CALL TFR(AKC,ACG2,NC22,NC22,1,2)
      DO 205 I=1,NC22
      DO 205 J=1,NC22
205   MAJM(I+KK,J+KK) = AKC(I,J)
      CALL TFR(AKC,ACG3,NC32,NC32,1,2)
      DO 206 I=1,NC32
      DO 206 J=1,NC32
206   MAJM(I+LL,J+LL) = AKC(I,J)
      CALL MMUL(B1,GAIN1,NC12,NACT,NC12,BCG)
      DO 207 I=1,NC12
      DO 207 J=1,NC12
207   MAJM(I,J+NC12) = BCG(I,J)
      CALL MMUL(B1,GAIN2,NC12,NACT,NC22,BCG)
      DO 208 I=1,NC12
      DO 208 J=1,NC22
      MAJM(I,J+K) = BCG(I,J)
208   MAJM(I,J+KK) = BCG(I,J)
      CALL MMUL(B1,GAIN3,NC12,NACT,NC32,BCG)
      DO 209 I=1,NC12
      DO 209 J=1,NC32
      MAJM(I,J+L) = BCG(I,J)
209   MAJM(I,J+LL) = BCG(I,J)
      CALL MMUL(B2,GAIN1,NC22,NACT,NC12,BCG)
      DO 210 I=1,NC22
      DO 210 J=1,NC12
      MAJM(I+K,J) = BCG(I,J)
210   MAJM(I+K,J+NC12) = BCG(I,J)
      CALL MMUL(B2,GAIN2,NC22,NACT,NC22,BCG)
      DO 211 I=1,NC22
      DO 211 J=1,NC22
211   MAJM(I+K,J+KK) = BCG(I,J)
      CALL MMUL(B2,GAIN3,NC22,NACT,NC32,BCG)
      DO 212 I=1,NC22
      DO 212 J=1,NC32
      MAJM(I+K,J+L) = BCG(I,J)
212   MAJM(I+K,J+LL) = BCG(I,J)
      CALL MMUL(B3,GAIN1,NC32,NACT,NC12,BCG)
      DO 213 I=1,NC32
      DO 213 J=1,NC12
      MAJM(I+L,J) = BCG(I,J)
213   MAJM(I+L,J+NC12) = BCG(I,J)
      CALL MMUL(B3,GAIN2,NC32,NACT,NC22,BCG)
      DO 214 I=1,NC32
      DO 214 J=1,NC22
```

```
      MAJM(I+L,J+K) = BCG(I,J)
214   MAJM(I+L,J+KK) = BCG(I,J)
      CALL MMUL(B3,GAIN3,NC32,NACT,NC32,BCG)
      DO 215 I=1,NC32
      DO 215 J=1,NC32
215   MAJM(I+L,J+LL) = BCG(I,J)
      CALL MMUL(KOB1,C2,NC12,NSEN,NC22,KCC)
      DO 216 I=1,NC12
      DO 216 J=1,NC22
216   MAJM(I+NC12,J+K) = KCC(I,J)
      CALL MMUL(KOB1,C3,NC12,NSEN,NC32,KCC)
      DO 217 I= 1,NC12
      DO 217 J= 1,NC32
217   MAJM(I+NC12,J+L) = KCC(I,J)
      CALL MMUL(KOB2,C1,NC22,NSEN,NC12,KCC)
      DO 218 I=1,NC22
      DO 218 J=1,NC12
218   MAJM(I+KK,J) = KCC(I,J)
      CALL MMUL(KOB2,C3,NC22,NSEN,NC32,KCC)
      DO 219 I=1,NC22
      DO 219 J=1,NC32
219   MAJM(I+KK,J+L) = KCC(I,J)
      CALL MMUL(KOB3,C1,NC32,NSEN,NC12,KCC)
      DO 220 I=1,NC32
      DO 220 J=1,NC12
220   MAJM(I+LL,J) = KCC(I,J)
      CALL MMUL(KOB3,C2,NC32,NSEN,NC22,KCC)
      DO 221 I=1,NC32
      DO 221 J=1,NC22
221   MAJM(I+LL,J+K) = KCC(I,J)
      CALL MMUL(B4,GAIN1,NR2,NACT,NC12,BCG)
      DO 222 I=1,NR2
      DO 222 J=1,NC12
      MAJM(I+P1,J) = BCG(I,J)
222   MAJM(I+P1,J+NC12) = BCG(I,J)
      CALL MMUL(B4,GAIN2,NR2,NACT,NC22,BCG)
      DO 223 I=1,NR2
      DO 223 J=1,NC22
      MAJM(I+P1,J+K) = BCG(I,J)
223   MAJM(I+P1,J+KK) = BCG(I,J)
      CALL MMUL(B4,GAIN3,NR2,NACT,NC32,BCG)
      DO 224 I=1,NR2
      DO 224 J=1,NC32
      MAJM(I+P1,J+L) = BCG(I,J)
224   MAJM(I+P1,J+LL) = BCG(I,J)
      CALL MMUL(KOB1,C4,NC12,NSEN,NR2,KCC)
      DO 225 I=1,NC12
      DO 225 J=1,NR2
225   MAJM(I+NC12,J+P1) = KCC(I,J)
      CALL MMUL(KOB2,C4,NC22,NSEN,NR2,KCC)
      DO 226 I=1,NC22
      DO 226 J=1,NR2.
226   MAJM(I+KK,J+P1) = KCC(I,J)
      CALL MMUL(KOB3,C4,NC32,NSEN,NR2,KCC)
```

```
      DO 227 I=1,NC32
      DO 227 J=1,NR2
 227  MAJM(I+LL,J+P1) = KCC(I,J)
C
C
      IF (DEC.EQ.3) THEN
C
C
      CALL FORMA(A4,D,W,NR,NR2,IR)
      DO 229 I=1,NR2
      DO 229 J=1,NR2
 229  MAJM(I+P1,J+P1) = A4(I,J)
C
      ELSE
C
      DO 230 I=1,NR2
      DO 230 J=1,NR2
 230  MAJM(I+P1,J+P1) = ABG4(I,J)
      CALL TFR(AKC,ACG4,NR2,NR2,1,2)
      DO 231 I=1,NR2
      DO 231 J=1,NR2
 231  MAJM(I+P2,J+P2) = AKC(I,J)
      CALL MMUL(B1,GAIN4,NC12,NACT,NR2,BCG)
      DO 232 I=1,NC12
      DO 232 J=1,NR2
      MAJM(I,J+P1) = BCG(I,J)
 232  MAJM(I,J+P2) = BCG(I,J)
      CALL MMUL(B2,GAIN4,NC22,NACT,NR2,BCG)
      DO 233 I=1,NC22
      DO 233 J=1,NR2
      MAJM(I+K,J+P1) = BCG(I,J)
 233  MAJM(I+K,J+P2) = BCG(I,J)
      CALL MMUL(B3,GAIN4,NC32,NACT,NR2,BCG)
      DO 234 I=1,NC32
      DO 234 J=1,NR2
      MAJM(I+L,J+P1) = BCG(I,J)
 234  MAJM(I+L,J+P2) = BCG(I,J)
      CALL MMUL(B4,GAIN4,NR2,NACT,NR2,BCG)
      DO 238 I=1,NR2
      DO 238 J=1,NR2
 238  MAJM(I+P1,J+P2) = BCG(I,J)
      CALL MMUL(KOB4,C1,NR2,NSEN,NC12,KCC)
      DO 242 I=1,NR2
      DO 242 J=1,NC12
 242  MAJM(I+P2,J) = KCC(I,J)
      CALL MMUL(KOB4,C2,NR2,NSEN,NC22,KCC)
      DO 243 I=1,NR2
      DO 243 J=1,NC22
 243  MAJM(I+P2,J+K) = KCC(I,J)
      CALL MMUL(KOB4,C3,NR2,NSEN,NC32,KCC)
      DO 244 I=1,NR2
      DO 244 J=1,NC32
 244  MAJM(I+P2,J+L) = KCC(I,J)
      ENDIF
```

```
C
C
C  TA, DAH [  NOW WE HAVE THE MAJM MATRIX
C
C
      IF (DEC.EQ.4) THEN
      PRINT*,' THE FOUR CONTROLLER MAJM IS '
      ELSE
      PRINT*,' THE THREE CONTROLLER MAJM W/RESIDUALS IS '
      ENDIF
      CALL PRNTXL(MAJM,MM,MM)
C
C
C  EIGENVALUE ANALYSIS SECTION
C
C
      PRINT'(///)'
      PRINT*,'                OVERALL SYSTEM EIGENVALUES '
      CALL EIGRF(MAJM,MM,NDA,0,Z,TEN,NCOL,WORK,IER)
      PRINT*,' IER = ',IER
      DO 400 I=1,MM
 400  PRINT*,'              ',Z(I)
      PRINT'(//)'
C
      PRINT*,'                EIGENVALUES OF AC + BCG SYSTEM 1 '
      CALL EIGRF(ABG1,NC12,NCOL,0,W1,TEN,NCOL,STOR,IER)
      PRINT*,' IER = ',IER
      DO 401 I=1,NC12
 401  PRINT*,'              ',W1(I)
      PRINT'(//)'
C
      PRINT*,'                EIGENVALUES OF AC - KCC SYSTEM 1 '
      CALL TFR(AKC,ACG1,NC12,NC12,1,2)
      CALL EIGRF(AKC,NC12,NCOL,0,W1,TEN,NCOL,STOR,IER)
      PRINT*,' IER = ',IER
      DO 402 I=1,NC12
 402  PRINT*,'              ',W1(I)
      PRINT'(//)'
C
      PRINT*,'                EIGENVALUES OF AC + BCG SYSTEM 2 '
      CALL EIGRF(ABG2,NC22,NCOL,0,W1,TEN,NCOL,STOR,IER)
      PRINT*,' IER = ',IER
      DO 403 I=1,NC22
 403  PRINT*,'              ',W1(I)
      PRINT'(//)'
C
      PRINT*,'                EIGENVALUES OF AC - KCC SYSTEM 2 '
      CALL TFR(AKC,ACG2,NC22,NC22,1,2)
      CALL EIGRF(AKC,NC22,NCOL,0,W1,TEN,NCOL,STOR,IER)
      PRINT*,' IER = ',IER
      DO 404 I=1,NC22
 404  PRINT*,'              ',W1(I)
      PRINT'(//)'
C
```

```
      PRINT*,'                EIGENVALUES OF AC + BCG SYSTEM 3 '
      CALL EIGRF(ABG3,NC32,NCOL,0,W1,TEN,NCOL,STOR,IER)
      PRINT*,' IER = ',IER
      DO 405 I=1,NC32
 405  PRINT*,'              ',W1(I)
      PRINT'(//)'
C
      PRINT*,'                EIGENVALUES OF AC - KCC SYSTEM 3 '
      CALL TFR(AKC,ACG3,NC32,NC32,1,2)
      CALL EIGRF(AKC,NC32,NCOL,0,W1,TEN,NCOL,STOR,IER)
      PRINT*,' IER = ',IER
      DO 406 I=1,NC32
 406  PRINT*,'              ',W1(I)
      PRINT'(//)'
C
      IF (NR.EQ.0) THEN
      PRINT*,' NO RESIDUAL TERM EIGENVALUES '
      GOTO 410
      ENDIF
C
      IF (DEC.EQ.4) THEN
C
      PRINT*,'                EIGENVALUES OF AC + BCG SYSTEM 4 '
      CALL EIGRF(ABG4,NR2,NCOL,0,W1,TEN,NCOL,STOR,IER)
      PRINT*,' IER = ',IER
      DO 407 I=1,NR2
 407  PRINT*,'              ',W1(I)
      PRINT'(//)'
C
      PRINT*,'                EIGENVALUES OF AC - KCC SYSTEM 4 '
      CALL TFR(AKC,ACG4,NR2,NR2,1,2)
      CALL EIGRF(AKC,NR2,NCOL,0,W1,TEN,NCOL,STOR,IER)
      PRINT*,' IER = ',IER
      DO 408 I=1,NR2
 408  PRINT*,'              ',W1(I)
C
      ELSE
C
      PRINT*,'                EIGENVALUES OF THE A RESIDUAL MATRIX '
      CALL EIGRF(A4,NR2,NCOL,0,W1,TEN,NCOL,STOR,IER)
      PRINT*,' IER = ',IER
      DO 409 I=1,NR2
 409  PRINT*,'              ',W1(I)
      ENDIF
      PRINT'(///)'
C
 410  CONTINUE
      IF (ZZ.EQ.1) GOTO 600
C
C
C  THIS SECTION FORMS THE TRANSFORMATION MATRICES.
C  TO GET MAJM IN UPPER TRIANGULAR FORM, IT IS
C  NECESSARY TO DRIVE THE B2G1, B3G1, B3G2, K2C1,
C  K3C1 AND K3C2 TERMS TO ZERO (THREE CTLRS).
```

```
C
C  WHEN FOUR CONTROLLERS ARE USED, THEN MAJM
C  WILL INCLUDE G4 AND K4 TERMS.  IT WILL THEN
C  BE NECESSARY TO DRIVE THE B4G(I), AND K4C(I)
C  TERMS TO ZERO, AS WELL.
C
C
C  AFTER THE TRANSFORMATION IS COMPLETE,
C  THE THREE CONTROLLER MAJM (WITH RESIDUALS)
C  WILL LOOK LIKE:
C
C  ****                                                          ****
C  *                                                                *
C  *  A1+BG1    B1G1     B1G2     B1G2     B1G3     B1G3      0     *
C  *                                                                *
C  *    0      A1-KC1   K1C2      0       K1C3      0       K1CR   *
C  *                                                                *
C  *    0        0     A2+BG2   B2G2     B2G3     B2G3      0      *
C  *                                                                *
C  *    0        0        0     A2-KC2   K2C3      0       K2CR   *
C  *                                                                *
C  *    0        0        0        0     A3+BG3   B3G3      0      *
C  *                                                                *
C  *    0        0        0        0       0     A3-KC3   K3CR    *
C  *                                                                *
C  *   BRG1     BRG1     BRG2     BRG2     BRG3     BRG3      AP    *
C  *                                                                *
C  ****                                                          ****
C
C  WHERE THE NON-ZERO TERMS INCLUDE THE TRANSFORMATION
C  MATRICES.
C
C
C
C
C  ON WITH THE TRANSFORMATION MATRICESC
C
C FIRST THE OBSERVER GAIN MATRIX, K4
C  WHEN USING FOUR CONTROLLERS
C
C
      IF (DEC.EQ.4) THEN
      CALL TFR(CT,C1,NSEN,NC12,1,2)
      DO 500 I=1,NC1
      DO 500 J=1,NSEN
 500  V(I,J) = CT(I,J)
      CALL TFR(CT,C2,NSEN,NC22,1,2)
      DO 501 I=1,NC2
      DO 501 J=1,NSEN
 501  V(I+NC1,J) = CT(I,J)
      CALL TFR(CT,C3,NSEN,NC32,1,2)
      DO 502 I=1,NC3
      DO 502 J=1,NSEN
 502  V(I+NC2+NC1,J) = CT(I,J)
```

```
      NRV = NC1 + NC2 + NC3
      PRINT*,' V (C1/C2/C3) IS '
      CALL PRNT (V,NRV,NSEN)
      CALL LSVDF(V,NCOL,NRV,NSEN,TEN,NCOL,-1,SING,STOR,IER)
      PRINT*,' '
      PRINT*,' LSVDF K4 IER = ',IER
      PRINT*(//)'
      PRINT*,' V OUT OF LSVDF IS '
      CALL PRNT (V,NSEN,NSEN)
      P1 = NSEN - NRV
      IF (P1.LT.1) THEN
      DO 503 I=1,NSEN
 503  GAMMA4(I,1) = V(I,NSEN)
      P1 = 1
      ELSE
      DO 504 I=1,NSEN
      DO 504 J=1,P1
 504  GAMMA4(I,J) = V(I,J+NRV)
      ENDIF
      PRINT*,' TRANSFORMATION MATRIX GAMMA4 '
      CALL PRNT (GAMMA4,NSEN,P1)
C
C  CHECK TO SEE THAT GAMMA4 IS ORTHOGONAL TO C1,C2, AND C3
C
C NOTE:   AKC IN THIS SECTION IS JUST A WORK AREA TO TEST
C         THE ORTHOGONALITY OF CT * GAMMA.  IN ALL CASES IT
C         SHOULD BE A BLOCK ZERO MATRIX.
C
      CALL TFR(CT,C1,NSEN,NC12,1,2)
      CALL MMUL(CT,GAMMA4,NC12,NSEN,P1,AKC)
      PRINT*,' C1T * GAMMA4 '
      CALL PRNT(AKC,NC12,P1)
      CALL TFR(CT,C2,NSEN,NC22,1,2)
      CALL MMUL(CT,GAMMA4,NC22,NSEN,P1,AKC)
      PRINT*,' C2T * GAMMA4 '
      CALL PRNT(AKC,NC22,P1)
      CALL TFR(CT,C3,NSEN,NC32,1,2)
      CALL MMUL(CT,GAMMA4,NC32,NSEN,P1,AKC)
      PRINT*,' C3T * GAMMA4 '
      CALL PRNT(AKC,NC32,P1)
C
      PRINT*,' C123 SINGULAR VALUES '
      CALL PRNT(SING,NRV,1)
      CALL TFR(TRT,GAMMA4,NSEN,P1,1,2)
      CALL MMUL(TRT,GAMMA4,P1,NSEN,P1,RK)
      CALL GMINV(P1,P1,RK,RK4,J,TAPE)
      CALL TFR(CT,C4,NSEN,NR2,1,2)
      CALL MMUL(TRT,C4,P1,NSEN,NR2,AKC)
      CALL MMUL(CT,GAMMA4,NR2,NSEN,P1,KOB4)
      CALL MMUL(KOB4,RK4,NR2,P1,P1,STOR)
      CALL MMUL(STOR,AKC,NR2,P1,NR2,CTCC4)
      ENDIF
C
C  THIS CTCC4 WILL BE SUBSTITUTED BACK INTO MRIC
```

```
C  SYSTEM 4 TO GET A NEW K4.
C
C
C  NOW THE OBSERVER GAIN MATRIX, K3
C
C
      CALL TFR(CT,C1,NSEN,NC12,1,2)
      DO 505 I=1,NC1
      DO 505 J=1,NSEN
 505  V(I,J) = CT(I,J)
      CALL TFR(CT,C2,NSEN,NC22,1,2)
      DO 506 I=1,NC2
      DO 506 J=1,NSEN
 506  V(I+NC1,J) = CT(I,J)
      NRV = NC1 + NC2
      PRINT*,' V (C1/C2) IS '
      CALL PRNT (V,NRV,NSEN)
      CALL LSVDF(V,NCOL,NRV,NSEN,TEN,NCOL,-1,SING,STOR,IER)
      PRINT*,' '
      PRINT*,' LSVDF K3 IER = ',IER
      PRINT'(//)'
      PRINT*,' V OUT OF LSVDF IS '
      CALL PRNT (V,NSEN,NSEN)
      P2 = NSEN - NRV
      IF (P2.LT.1) THEN
      DO 507 I=1,NSEN
 507  GAMMA3(I,1) = V(I,NSEN)
      P2 = 1
      ELSE
      DO 508 I=1,NSEN
      DO 508 J=1,P2
 508  GAMMA3(I,J) = V(I,J+NRV)
      ENDIF
      PRINT*,' TRANSFORMATION MATRIX GAMMA3 '
      CALL PRNT (GAMMA3,NSEN,P2)
C
C  CHECK TO SEE THAT GAMMA3 IS ORTHOGONAL TO C1 AND C2
C
      CALL TFR(CT,C1,NSEN,NC12,1,2)
      CALL MMUL(CT,GAMMA3,NC12,NSEN,P2,AKC)
      PRINT*,' C1T * GAMMA3 '
      CALL PRNT(AKC,NC12,P2)
      CALL TFR(CT,C2,NSEN,NC22,1,2)
      CALL MMUL(CT,GAMMA3,NC22,NSEN,P2,AKC)
      PRINT*,' C2T * GAMMA3 '
      CALL PRNT(AKC,NC22,P2)
C
      PRINT*,' C12 SINGULAR VALUES '
      CALL PRNT(SING,NRV,1)
C
      CALL TFR(TRT,GAMMA3,NSEN,P2,1,2)
      CALL MMUL(TRT,GAMMA3,P2,NSEN,P2,RK)
      CALL GMINV(P2,P2,RK,RK3,J,TAPE)
      CALL TFR(CT,C3,NSEN,NC32,1,2)
```

```
      CALL MMUL(TRT,C3,P2,NSEN,NC32,AKC)
      CALL MMUL(CT,GAMMA3,NC32,NSEN,P2,KOB3)
      CALL MMUL(KOB3,RK3,NC32,P2,P2,STOR)
      CALL MMUL(STOR,AKC,NC32,P2,NC32,CTCC3)
C
C
C  CTCC3 WILL BE SUBSTITUTED BACK INTO
C  MRIC-SYSTEM 3 FOR A NEW K3.
C
C
C  NOW THE OBSERVER GAIN MATRIX, K2
C
C
      CALL TFR(CT,C1,NSEN,NC12,1,2)
      DO 509 I=1,NC1
      DO 509 J=1,NSEN
 509  V(I,J) = CT(I,J)
      PRINT*,' V (C1) IS '
      CALL PRNT (V,NC1,NSEN)
      CALL LSVDF(V,NCOL,NC1,NSEN,TEN,NCOL,-1,SING,STOR,IER)
      PRINT*,' '
      PRINT*,' LSVDF K2 IER = ',IER
      PRINT'(//)'
      PRINT*,' V OUT OF LSVDF IS '
      CALL PRNT (V,NSEN,NSEN)
      P3 = NSEN - NC1
      IF (P3.LT.1) THEN
      DO 510 I=1,NSEN
 510  GAMMA2(I,1) = V(I,NSEN)
      P3 = 1
      ELSE
      DO 511 I=1,NSEN
      DO 511 J=1,P3
 511  GAMMA2(I,J) = V(I,J+NC1)
      ENDIF
      PRINT*,' TRANSFORMATION MATRIX GAMMA2 '
      CALL PRNT (GAMMA2,NSEN,P3)
C
C  CHECK TO SEE THAT GAMMA2 IS ORTHOGONAL TO C1
C
      CALL MMUL(CT,GAMMA2,NC12,NSEN,P3,AKC)
      PRINT*,' C1T * GAMMA2 '
      CALL PRNT(AKC,NC12,P3)
C
      PRINT*,' C1 SINGULAR VALUES '
      CALL PRNT(SING,NC1,1)
      CALL TFR(TRT,GAMMA2,NSEN,P3,1,2)
      CALL MMUL(TRT,GAMMA2,P3,NSEN,P3,RK)
      CALL GMINV(P3,P3,RK,RK2,J,TAPE)
      CALL TFR(CT,C2,NSEN,NC22,1,2)
      CALL MMUL(TRT,C2,P3,NSEN,NC22,AKC)
      CALL MMUL(CT,GAMMA2,NC22,NSEN,P3,KOB2)
      CALL MMUL(KOB2,RK2,NC22,P3,P3,STOR)
      CALL MMUL(STOR,AKC,NC22,P3,NC22,CTCC2)
```

```
C
C
C  CTCC2 WILL BE SUBSTITUTED BACK INTO
C  MRIC-SYSTEM 2 FOR A NEW K2
C
C
C  NOW THE CONTROLLER GAIN MATRIX, G3
C
C
      IF (DEC.EQ.4) THEN
      DO 512 I=1,NR
      DO 512 J=1,NACT
 512  V(I,J) = B4(I+NP,J)
      PRINT*,' V (B4) IS '
      CALL PRNT (V,NR,NACT)
      CALL LSVDF(V,NCOL,NR,NACT,TEN,NCOL,-1,SING,STOR,IER)
      PRINT*,' '
      PRINT*,' LSVDF G2 IER = ',IER
      PRINT'(//)'
      PRINT*,' V OUT OF LSVDF IS '
      CALL PRNT (V,NACT,NACT)
      E2 = NACT - NP
      IF (E2.LT.1) THEN
      DO 513 I=1,NACT
 513  T3(I,1) = V(I,NACT)
      E2 = 1
      ELSE
      DO 514 I=1,NACT
      DO 514 J=1,E2
 514  T3(I,J) = V(I,J+NP)
      ENDIF
      PRINT*,' TRANSFORMATION MATRIX T3 '
      CALL PRNT (T3,NACT,E2)
C
C  CHECK TO SEE THAT T3 IS ORTHOGONAL TO B4
C
C  NOTE:     IN THIS SECTION, BCG IS THE WORK AREA
C            FOR B * T.  IN ALL CASES THESE SHOULD
C            BE BLOCK ZERO MATRICES.
C
C
      CALL MMUL(B4,T3,NR2,NACT,E2,BCG)
      PRINT*,' B4 * T3 '
      CALL PRNT(BCG,NR2,E2)
C
      PRINT*,' B4 SINGULAR VALUES '
      CALL PRNT(SING,NR,1)
C
      CALL VMULFM(T3,T3,NACT,E2,E2,NCOL,NCOL,RK,NCOL,IER)
      CALL GMINV(E2,E2,RK,RG3,J,TAPE)
      CALL MMUL(B3,T3,NC32,NACT,E2,KOB3)
      CALL MMUL(KOB3,RG3,NC32,E2,E2,SAT3)
      CALL VMULFP(SAT3,T3,NC32,E2,NACT,NCOL,NCOL,KOB3,NCOL,IER)
      CALL VMULFP(KOB3,B3,NC32,NACT,NC32,NCOL,NCOL,SAT3,NCOL,IER)
```

```
      ENDIF
C
C
C  THIS SAT3 WILL BE SUBSTITUTED BACK INTO MRIC
C  SYSTEM 3 FOR A NEW G3.
C
C
C  NOW THE CONTROLLER GAIN MATRIX, G2
C
C
      DO 515 I=1,NC3
      DO 515 J=1,NACT
 515  V(I,J) = B3(I+NC3,J)
      IF (DEC.EQ.4) THEN
      DO 516 I=1,NR
      DO 516 J=1,NACT
 516  V(I+NC3,J) = B4(I+NR,J)
      PRINT*,' V (B3/B4) IS '
      NRV = NC3 + NR
      ELSE
      PRINT*,' V (B3) IS '
      NRV = NC3
      ENDIF
      CALL PRNT (V,NRV,NACT)
      CALL LSVDF(V,NCOL,NRV,NACT,TEN,NCOL,-1,SING,STOR,IER)
      PRINT*,' '
      PRINT*,' LSVDF G2 IER = ',IER
      PRINT'(//)'
      PRINT*,' V OUT OF LSVDF IS '
      CALL PRNT (V,NACT,NACT)
      E3 = NACT - NRV
      IF (E3.LT.1) THEN
      DO 517 I =1,NACT
 517  T2(I,1) = V(I,NACT)
      E3 = 1
      ELSE
      DO 518 I=1,NACT
      DO 518 J=1,E3
 518  T2(I,J) = V(I,J+NRV)
      ENDIF
      PRINT*,' TRANSFORMATION MATRIX T2 '
      CALL PRNT (T2,NACT,E3)
C
C  CHECK TO SEE THAT T2 IS ORTHOGONAL TO B3 AND B4
C
      CALL MMUL(B3,T2,NC32,NACT,E3,BCG)
      PRINT*,' B3 * T2 '
      CALL PRNT(BCG,NC32,E3)
      IF (DEC.EQ.4) THEN
      CALL MMUL(B4,T2,NR2,NACT,E3,BCG)
      PRINT*,' B4 * T2 '
      CALL PRNT(BCG,NR2,E3)
      ENDIF
C
```

```
      IF (DEC.EQ.3) THEN
      PRINT*,' B3 SINGULAR VALUES '
      ELSE
      PRINT*,' B34 SINGULAR VALUES '
      ENDIF
      CALL PRNT(SING,NRV,1)
C
      CALL VMULFM(T2,T2,NACT,E3,E3,NCOL,NCOL,RK,NCOL,IER)
      CALL GMINV(E3,E3,RK,RG2,J,TAPE)
      CALL MMUL(B2,T2,NC22,NACT,E3,KOB2)
      CALL MMUL(KOB2,RG2,NC22,E3,E3,SAT2)
      CALL VMULFP(SAT2,T2,NC22,E3,NACT,NCOL,NCOL,KOB2,NCOL,IER)
      CALL VMULFP(KOB2,B2,NC22,NACT,NC22,NCOL,NCOL,SAT2,NCOL,IER)
C
C
C  SAT2 WILL BE SUBSTITUTED BACK INTO
C  MRIC-SYSTEM 2 FOR A NEW G2.
C
C
C  NOW THE CONTROLLER GAIN MATRIX, G1
C
C
      DO 519 I=1,NC2
      DO 519 J=1,NACT
 519  V(I,J) = B2(I+NC2,J)
      DO 520 I=1,NC3
      DO 520 J=1,NACT
 520  V(I+NC2,J) = B3(I+NC3,J)
      IF (DEC.EQ.4) THEN
      DO 521 I=1,NR
      DO 521 J=1,NACT
 521  V(I+NC2+NC3,J) = B4(I+NR,J)
      PRINT*,' V(B2/B3/B4) IS '
      NRV = NC2 + NC3 + NR
      ELSE
      PRINT*,' V (B2/B3) IS '
      NRV = NC2 + NC3
      ENDIF
      CALL PRNT (V,NRV,NACT)
      CALL LSVDF(V,NCOL,NRV,NACT,TEN,NCOL,-1,SING,STOR,IER)
      PRINT*,' '
      PRINT*,' LSVDF G1 IER = ',IER
      PRINT'(//)'
      PRINT*,' V OUT OF LSVDF IS '
      CALL PRNT (V,NACT,NACT)
      E4 = NACT - NRV
      IF (E4.LT.1) THEN
      DO 522 I=1,NACT
 522  T1(I,1) = V(I,NACT)
      E4 = 1
      ELSE
      DO 523 I=1,NACT
      DO 523 J=1,E4
 523  T1(I,J) = V(I,J+NRV)
```

```
      ENDIF
      PRINT*,' TRANSFORMATION MATRIX T1 '
      CALL PRNT (T1,NACT,E4)
C
C  CHECK TO SEE THAT T1 IS ORTHOGONAL TO B2,B3,B4
C
      CALL MMUL(B2,T1,NC22,NACT,E4,BCG)
      PRINT*,' B2 * T1 '
      CALL PRNT(BCG,NC22,E4)
      CALL MMUL(B3,T1,NC32,NACT,E4,BCG)
      PRINT*,' B3 * T1 '
      CALL PRNT(BCG,NC32,E4)
      IF (DEC.EQ.4) THEN
      CALL MMUL(B4,T1,NR2,NACT,E4,BCG)
      PRINT*,' B4 * T1 '
      CALL PRNT(BCG,NR2,E4)
      ENDIF
C
      IF (DEC.EQ.3) THEN
      PRINT*,' B23 SINGULAR VALUES '
      ELSE
      PRINT*,' B234 SINGULAR VALUES '
      ENDIF
      CALL PRNT(SING,NRV,1)
C
      CALL VMULFM(T1,T1,NACT,E4,E4,NCOL,NCOL,RK,NCOL,IER)
      CALL GMINV(E4,E4,RK,RG1,J,TAPE)
      CALL MMUL(B1,T1,NC12,NACT,E4,KOB1)
      CALL MMUL(KOB1,RG1,NC12,E4,E4,SAT)
      CALL VMULFP(SAT,T1,NC12,E4,NACT,NCOL,NCOL,KOB1,NCOL,IER)
      CALL VMULFP(KOB1,B1,NC12,NACT,NC12,NCOL,NCOL,SAT,NCOL,IER)
C
C
C  SAT1 WILL BE SUBSTITUTED BACK INTO MRIC-
C  SYSTEM 1 FOR A NEW G1
C
C
      ZZ = 1
      GOTO 115
 600  CONTINUE
      ZZ = 0
C
C
C  THE PROBLEM IS NOW COMPLETE
C
C
      PRINT*(///)'
      PRINT*,'  THIS RUN HAS BEEN COMPLETED  '
      PRINT*(///)'
C
C
C  FROM HERE WE CAN START OVER, REARRANGE, OR STOP
C
C
```

```
PRINT*,'  ENTER  1    TO CHANGE THE WEIGHTING MATRIX '
PRINT*,' '
PRINT*,'  ENTER  2    TO MAKE A FOUR CONTROLLER RUN  '
PRINT*,' '
PRINT*,'  ENTER  2    ALSO, TO REARRANGE MODES FOR N = ',N
PRINT*,' '
PRINT*,'  ENTER  3    TO TERMINATE THIS JOB '
READ(6,*) Q
PRINT'(//)'
PRINT*,Q
IF (Q.EQ.1) THEN
GOTO 100
ELSE IF (Q.EQ.2) THEN
GOTO 20
ENDIF
END
```

Appendix D

Program Subroutines

```
      SUBROUTINE FACTOR(N,A,S,MR)
C       A=S*S
      DIMENSION A(1),S(1)
      COMMON/MAINB/NCOL,NCOL1
      COMMON/INOUT/KOUT
      TOL=1.E-6
      MR=0
      NN=N*NCOL
      TOL1=0.
      DO 1 I=1,NN,NCOL1
      R=ABS(A(I))
 1    IF (R.GT.TOL1) TOL1=R
      TOL1=TOL1*1.E-12
      II=1
      DO 50 I=1,N
      IM1=I-1
       DO 5 JJ=I,NN,NCOL
 5    S(JJ)=0.
      ID=II+IM1
      R=A(ID)-DOT(IM1,S(II),S(II))
      IF (ABS(R).LT.(TOL*A(ID)+TOL1)) GO TO 50
      IF (R) 15,50,20
 15   MR=-1
      WRITE(KOUT,1000)
 1000 FORMAT(37H0TRIED TO FACTOR AN INDEFINITE MATRIX    )
      RETURN
 20   S(ID)=SQRT(R)
      MR=MR+1
      IF (I.EQ.N) RETURN
      L=II+NCOL
      DO 25 JJ=L,NN,NCOL
      IJ=JJ+IM1
 25   S(IJ)=(A(IJ)-DOT(IM1,S(II),S(JJ)))/S(ID)
 50   II=II+NCOL
      RETURN
      END


      SUBROUTINE FORMA(A,D,W,N,N2,IC)
      COMMON/MAINB/NCOL
      REAL A(NCOL,NCOL),W(17),D(17)
      INTEGER IC(N),I,J,N,M
      DO 1 I=1,N2
      DO 1 J=1,N2
      A(I,J)=0.0
1     CONTINUE
      DO 2 I=1,N
      M= IC(I)
      A((I+N),(I+N))=D(M)
      A(I,(I+N)) = 1.0
      A((I+N),I) = -(W(M)**2)
2     CONTINUE
      RETURN
      END
```

```
      SUBROUTINE FORMB(B,PHI,N,N2,NACT,IC)
      COMMON/MAINB/NCOL
      REAL B(NCOL,NCOL),PHI(NCOL,NCOL)
      INTEGER IC(N),NACT,N,M,I,J
      DO 1 I=1,N2
      DO 1 J=1,NACT
      B(I,J) = 0.0
1     CONTINUE
      DO 2 I=1,N
      M = IC(I)
      DO 2 J=1,NACT
      B((N+I),J) = PHI(M,J)
2     CONTINUE
      RETURN
      END


      SUBROUTINE FORMC(C,PHIS,N,N2,NSEN,IC)
      COMMON/MAINB/NCOL
      REAL C(NCOL,NCOL),PHIS(NCOL,NCOL)
      INTEGER IC(N),M,NSEN,N,N2,I,J
      DO 1 I=1,NSEN
      DO 1 J=1,N2
      C(I,J) = 0.0
1     CONTINUE
      DO 2 I=1,NSEN
      DO 2 J=1,N
      M = IC(J)
      C(I,J) = PHIS(M,I)
2     CONTINUE
      RETURN
      END


      SUBROUTINE FORMQ(Q,A,N,IC)
      COMMON/MAINB/NCOL
      REAL A(NCOL),Q(NCOL,NCOL)
      INTEGER I,J,K,M,N,N2,IC(NCOL)
      N2 = N * 2
      DO 1 I=1,N2
      DO 1 J=1,N2
      Q(I,J) = 0.0
 1    CONTINUE
      DO 2 I=1,N
      J = I
      M = IC(I)
      DO 3 K=I-1,I
 3    Q(I+K,J+K) = A(M)
 2    CONTINUE
      RETURN
      END
```

```
      SUBROUTINE GHINV(NR,NC,A,U,MR,MT)
      DIMENSION A(1),U(1)
      COMMON/MAIN1/NDIM,NDIM1,S(1)
      COMMON/MAINB/NCOL,NCOL1
      COMMON/INOUT/KOUT
      TOL=1.E-12
      MR=NC
      NRM1=NR-1
      TOL1=1.E-20
      JJ=1
      DO 100 J=1,NC
      FAC=DOT(NR,A(JJ),A(JJ))
      JM1=J-1
      JRM=JJ+NRM1
      JCM=JJ+JM1
      DO 20 I=JJ,JCM
20    U(I)=0.
      U(JCM)=1.0
      IF (J.EQ.1) GO TO 54
      KK=1
      DO 30 K=1,JM1
      IF (S(K).EQ.1.0) GO TO 30
      TEMP=-DOT(NR,A(JJ),A(KK))
      CALL VADD(K,TEMP,U(JJ),U(KK))
30    KK=KK+NCOL
      DO 50 L=1,2
      KK=1
      DO 50 K=1,JM1
      IF (S(K).EQ.0.) GO TO 50
      TEMP=-DOT(NR,A(JJ),A(KK))
      CALL VADD(NR,TEMP,A(JJ),A(KK))
      CALL VADD(K,TEMP,U(JJ),U(KK))
50    KK=KK+NCOL
      TOL1=TOL*FAC
      FAC=DOT(NR,A(JJ),A(JJ))
54    IF (FAC.GT.TOL1) GO TO 70
      DO 55 I=JJ,JRM
55    A(I)=0.
      S(J)=0.
      KK=1
      DO 65 K=1,JM1
      IF (S(K).EQ.0.) GO TO 65
      TEMP=-DOT(K,U(KK),U(JJ))
      CALL VADD(NR,TEMP,A(JJ),A(KK))
65    KK=KK+NCOL
      FAC=DOT(J,U(JJ),U(JJ))
      MR=MR-1
      GO TO 75
70    S(J)=1.0
      KK=1
      DO 72 K=1,JM1
      IF (S(K).EQ.1.) GO TO 72
      TEMP=-DOT(NR,A(JJ),A(KK))
      CALL VADD(K,TEMP,U(JJ),U(KK))
```

```
 72     KK=KK+NCOL
 75     FAC=1./SQRT(FAC)
        DO 80 I=JJ,JRM
 80     A(I)=A(I)*FAC
        DO 85 I=JJ,JCM
 85     U(I)=U(I)*FAC
 100    JJ=JJ+NCOL
        IF (MR.EQ.NR.OR.MR.EQ.NC) GO TO 120
        IF (MT.NE.0) WRITE(KOUT,110)NR,NC,MR
 110    FORMAT(I3,1HX,I2,8H M  RANK,I2)
 120    NEND=NC*NCOL
        JJ=1
        DO 135 J=1,NC
        DO 125 I=1,NR
        II=I-J
        S(I)=0.
        DO 125 KK=JJ,NEND,NCOL
 125    S(I)=S(I)+A(II+KK)*U(KK)
        II=J
        DO 130 I=1,NR
        U(II)=S(I)
 130    II=II+NCOL
 135    JJ=JJ+NCOL1
        RETURN
        END


        SUBROUTINE INTEG(N,A,C,S,T)
C       S=INTEGRAL EA*C*EA FROM 0 TO T
C       C IS DESTROYED
        DIMENSION A(1),C(1),S(1)
        COMMON/MAIN1/NDIM,NDIM1,X(1)
        COMMON/MAINB/NCOL,NCOL1
        COMMON/MAIN2/COEF(100)
        NN=N*NCOL
        NM1=N-1
        IND=0
        ANORM=XNORM(N,A)
        DT=T
 5      IF (ANORM*ABS(DT).LE.0.5) GO TO 10
        DT=DT/2.
        IND=IND+1
        GO TO 5
 10     DO 15 I=1,NN,NCOL
        J=I+NM1
        DO 15 JJ=I,J
 15     S(JJ)=DT*C(JJ)
        T1=DT**2/2.
        DO 25 IT=3,15
        CALL MMUL(A,C,N,N,N,X)
        DO 20 I=1,N
        II=(I-1)*NCOL
        DO 20 JJ=I,NN,NCOL
        II=II+1
```

```
      C(JJ)=(X(JJ)+X(II))*T1
 20   S(JJ)=S(JJ)+C(JJ)
 25   T1=DT/FLOAT(IT)
      IF (IND.EQ.0) GO TO 100
      COEF(11)=1.0
      DO 30 I=1,10
      II=11-I
 30   COEF(II)=DT*COEF(II+1)/FLOAT(I)
      II=1
      DO 40 I=1,NN,NCOL
      J=I+NM1
      DO 35 JJ=I,J
 35   X(JJ)=A(JJ)*COEF(1)
      X(II)=X(II)+COEF(2)
 40   II=II+NCOL1
      DO 55 L=3,11
      CALL MMUL(A,X,N,N,N,C)
      II=1
      T1=COEF(L)
      DO 55 I=1,NN,NCOL
      J=I+NM1
      DO 50 JJ=I,J
 50   X(JJ)=C(JJ)
      X(II)=X(II)+T1
 55   II=II+NCOL1
C     X=EXP(A*DT)
      L=0
 60   L=L+1
      CALL MMUL(X,S,N,N,N,C)
      II=1
      DO 90 I=1,N
      J=II
      IF (I.EQ.1) GO TO 75
      DO 70 JJ=I,II,NCOL
      S(JJ)=S(J)
 70   J=J+1
 75   DO 85 JJ=I,N
      KK=JJ
      DO 80 K=I,NN,NCOL
      S(J)=S(J)+C(K)*X(KK)
 80   KK=KK+NCOL
 85   J=J+NCOL
      DO 87 JJ=I,NN,NCOL
 87   C(JJ)=X(JJ)
 90   II=II+NCOL
      IF (L.EQ.IND) GO TO 100
      CALL MMUL(C,C,N,N,N,X)
      GO TO 60
 100  CONTINUE
      RETURN
      END
```

```
      SUBROUTINE MLINEQ(N,A,C,X,TOL,IER)
C     SOLVES X'X+XA+C=0
C     A AND X CAN BE IN SAME LOCATION
C     ANSWER RETURNED IN C AND X
      DIMENSION A(1),C(1),X(1)
      COMMON/MAINB/NCOL,NCOL1
      COMMON/MAIN3/F(1)
      ADV=TOL*1.E-6
      DT=.5
      DT1=0.
      NN=N*NCOL
      DO 5 II=1,NN,NCOL1
 5    DT1=DT1-A(II)
      DT1=DT1/N
      IF (DT1.GT.4.0) DT=DT*4.0/DT1
      II=1
      DO 20 I=1,N
      DO 15 JJ=I,NN,NCOL
 15   X(JJ)=DT*A(JJ)
      X(II)=X(II)-.5
 20   II=II+NCOL1
      CALL GMINV(N,N,X,F,MR,0)
      IER=4
      IF (MR.NE.N) RETURN
      CALL MMUL(C,F,N,N,N,X)
C     INITIALIZATION OF X,F
      I=1
      DO 40 II=1,NN,NCOL
      J=II
      IF (I.EQ.1) GO TO 30
      DO 25 JJ=I,II,NCOL
      C(J)=C(JJ)
 25   J=J+1
 30   ID=J
      DO 35 JJ=II,NN,NCOL
      C(J)=DT*DOT(N,F(II),X(JJ))
 35   J=J+1
      F(ID)=F(ID)+1.0
 40   I=I+1
      DO 90 IT=1,20
      NEZ=0
      CALL MMUL(C,F,N,N,N,X)
      I=1
      II=1
      J=1
      GO TO 70
 60   J=II
      DO 65 JJ=I,II,NCOL
      C(J)=C(JJ)
 65   J=J+1
 70   ID=J
      DT1=C(J)
      DO 75 JJ=II,NN,NCOL
      C(J)=C(J)+DOT(N,F(II),X(JJ))
```

```
75    J=J+1
      J=J-1
      DO 80 JJ=II,J
80    X(JJ)=F(JJ)
      IF (ABS(C(ID)).GT.1.E150) GO TO 95
      IF (ABS(C(ID)-DT1).LT.(ADV+TOL*ABS(C(ID)))) NEZ=NEZ+1
      I=I+1
      II=II+NCOL
      IF (I.LE.N) GO TO 60
      IF (NEZ.EQ.N) GO TO 150
      CALL MMUL(X,X,N,N,N,F)
90    CONTINUE
95    IER=1
      RETURN
150   CONTINUE
      NM1=N-1
      DO 155 I=1,NN,NCOL
      II=I+NM1
      DO 155 JJ=I,II
155   X(JJ)=C(JJ)
      IER=0
      RETURN
      END


      SUBROUTINE MMUL(X,Y,N1,N2,N3,Z)
      COMMON/MAINB/NCOL
      DIMENSION X(NCOL,1),Y(NCOL,1),Z(NCOL,1)
      DO 3 J=1,N3
      DO 2 I=1,N1
      S=0.
      DO 1 K=1,N2
  1   S=S+X(I,K)*Y(K,J)
  2   Z(I,J)=S
  3   CONTINUE
      END


      SUBROUTINE MRIC(N,A,S,Q,X,Z,TOL,IER)
      DIMENSION A(1),S(1),Q(1),X(1),Z(1)
      COMMON/MAIN1/NDIM,NDIM1,F(1)
      COMMON/MAINA/NCOL,NCOL1
      COMMON/MAIN2/TR(1)
      COMMON/INOUT/KOUT
      ADV=TOL*1.E-6
      NN=N*NCOL
      NM1=N-1
      IND=1
      COUNT=0.
      IF (IER.EQ.1) COUNT=99.
      IF (IER.EQ.1) MR=N
      IF (IER.EQ.1) GO TO 100
      T1=-1.
300   CONTINUE
```

```
      IER=0
      COUNT=COUNT+1.
      DO 15 I=1,N
      DO 15 J=I,NN,NCOL
 15   X(J)=-S(J)
      CALL INTEG(N,A,X,Z,T1)
      CALL FACTOR(N,Z,X,MR)
      IER=1
      IF (MR.LT.0) GO TO 200
      IER=0
      CALL GMINV(N,N,X,Z,MR,0)
      CALL TFR(TR,Z,N,N,1,2)
      CALL MMUL(Z,TR,N,N,N,X)
      DO 18 II=1,NN,NCOL1
      I=II
      DO 17 J=II,NN,NCOL
      X(J)=(X(J)+X(I))/2.
      X(I)=X(J)
 17   I=I+1
 18   CONTINUE
 100  CONTINUE
      DO 16 I=1,N
 16   TR(I)=-1.0
C     A+SX IS STABLE
C     POSSIBLE UNCONTROLLABILITY IF MR.NE.N
C       JIM DILLOW IS A NUTTY MATH PROF
      TOL1=TOL/10.
      MAXIT=40
      DO 40 IT=1,MAXIT
      IF (IER.EQ.1) GO TO 101
      CALL MMUL(S,X,N,N,N,F)
      CALL MMUL(X,F,N,N,N,Z)
      DO 20 I=1,NN,NCOL
      II=I+NM1
      DO 20 J=I,II
      X(J)=A(J)-F(J)
 20   Z(J)=Z(J)+Q(J)
 101  CONTINUE
      IER=0
      CALL MLINEQ(N,X,Z,X,TOL1,IER)
      IF (IER.NE.0) GO TO 200
      L=0
      C1=0.0
      II=1
      DO 25 I=1,N
      IF (ABS(X(II)-TR(I)).LT.(ADV+TOL*X(II))) L=L+1
      TR(I)=X(II)
      II=II+NCOL1
 25   C1=C1+TR(I)
      IF (ABS(C1).GT.1.E20) GO TO 50
      IF (L.NE.N) GO TO 40
      CALL GMINV(N,N,Z,F,MR,0)
      CALL MMUL(S,X,N,N,N,Z)
      DO 30 I=1,NN,NCOL
```

```
      II=I+NM1
      DO 30 J=I,II
30    Z(J)=A(J)-Z(J)
      IF (MR.NE.N) WRITE(KOUT,35)MR
 35   FORMAT(27HORICCATI SOLN IS PSD--RANK ,I3)
      GO TO 65
40    CONTINUE
      WRITE(KOUT,45) MAXIT
 45   FORMAT(27HORICCATI NON-CONVERGENT IN ,I2,11H ITERATIONS)
      GO TO 60
50    WRITE(KOUT,55)IT,T1
 55   FORMAT(30HORICCATI BLOW-UP AT ITERATION ,I2,12H INITIAL T= ,F10.5)
60    IER=1
65    RETURN
200   IF (IND.EQ.2) GO TO 250
      IF (COUNT.GE.10.) RETURN
      T1=T1/(2.**COUNT)
      IND=2
      GO TO 300
250   T1=T1*(2.**COUNT)
      IND=1
      GO TO 300
      END


      SUBROUTINE PRNT(MAT,N,M)
      COMMON/MAINB/NCOL
      REAL MAT(NCOL,NCOL)
      INTEGER N,I,J,K,M
      PRINT*,' '
      IF (M.GT.12) GOTO 2
      DO 1 I=1,N
      PRINT'(1X,12F10.4)',(MAT(I,J),J=1,M)
1     CONTINUE
      GOTO 10
2     CONTINUE
      IF (M.GT.24) THEN
      CALL PRNTXL(MAT,N,M)
      RETURN
      ENDIF
      DO 3 I=1,N
      PRINT'(1X,12F10.4)',(MAT(I,J),J=1,12)
3     CONTINUE
      PRINT'(//)'
      DO 4 I=1,N
      PRINT'(1X,12F10.4)',(MAT(I,J),J=13,M)
4     CONTINUE
10    PRINT'(///)'
      RETURN
      END
```

```
      SUBROUTINE PRNTXL(MAT,N,M)
      COMMON/MAINB/NCOL
      COMMON/MAINA/NDA
      REAL MAT(NDA,NDA)
      INTEGER I,J,K,L,M,N
      PRINT*,' '
      DO 1 L=1,M,12
      K = L + 11
      IF (M-L.LT.11) K = M
      DO 2 I=1,N
      PRINT'(1X,12F10.4)',(MAT(I,J),J=L,K)
 2    CONTINUE
      PRINT'(//)'
 1    CONTINUE
      PRINT'(///)'
      RETURN
      END


      SUBROUTINE TFR(X,A,N,M,K,I)
C  I=   1 GIVES X = A,   2 GIVES X = A TRANSPOSE
C       3 GIVES X = A  AS A VECTOR
C       4 GIVES A = X  WHERE X WAS A VECTOR
      DIMENSION X(1),A(1)
      COMMON/MAINB/NCOL
      JS=(K-1)*NCOL*M
      JEND=M*NCOL
      GO TO (10,30,50,70),I
 10   DO 20 II=1,N
      DO 20 JJ=II,JEND,NCOL
 20   X(JJ)=A(JJ+JS)
      RETURN
 30   DO 40 II=1,N
      KK=(II-1)*NCOL
      DO 40 JJ=1,M
      LL=(JJ-1)*NCOL+II
 40   X(KK+JJ)=A(LL+JS)
      RETURN
 50   KK=0
      DO 60 II=1,JEND,NCOL
      LL=II+N-1
      DO 60 JJ=II,LL
      KK=KK+1
 60   X(KK)=A(JJ+JS)
      RETURN
 70   KK=M*N+1
      DO 80 II=1,M
      LL=(M-II)*NCOL+1
      DO 80 IJ=1,N
      KK=KK-1
      JJ=LL+N-IJ
 80   A(JJ+JS)=X(KK)
      RETURN
      END
```

```
      FUNCTION DOT(NR,A,B)
      DIMENSION A(1),B(1)
      DOT=0.
      DO 1 I=1,NR
 1    DOT=DOT+A(I)*B(I)
      RETURN
      END


      SUBROUTINE VADD(N,C1,A,B)
      DIMENSION A(1),B(1)
      DO 1 I=1,N
 1    A(I)=A(I)+C1*B(I)
      RETURN
      END


      FUNCTION XNORM(N,A)
C  COMPUTES AN APPROXIMATION TO NORM OF A -- NOT A BOUND
      DIMENSION A(1)
      COMMON/MAINB/NCOL,NCOL1
      NN=N*NCOL
      C1=0.
      TR=A(1)
      IF (N.EQ.1) GO TO 20
      I=2
      DO 10 II=NCOL1,NN,NCOL
      J=II
      DO 5 JJ=I,II,NCOL
      C1=C1+ABS(A(J)*A(JJ))
 5    J=J+1
      TR=TR+A(J)
 10   I=I+1
      TR=TR/FLOAT(N)
      DO 15 II=1,NN,NCOL1
 15   C1=C1+(A(II)-TR)**2
 20   XNORM=ABS(TR)+SQRT(C1)
      RETURN
      END
```

Appendix E

Line-of-Sight and Defocus Algorithm

The equations relating optical surface motion are given below in Eqs E-2, E-3, and E-4. These form the line-of-sight and defocus criteria as

$$LOSX = Y/F,\ LOSY = X/F,\ DEFOCUS = Z \tag{E-1}$$

where

$$X = A_1 \left[-X_p + X_t - R_p \cdot \theta Y_p + A_2 \cdot \theta Y_s - 2T \cdot \theta Y_t \right] + X_t - X_f \tag{E-2}$$

$$Y = A_1 \left[-Y_p + Y_t - R_p \cdot \theta X_p - A_2 \cdot \theta X_s + 2T \cdot \theta X_t \right] + Y_t - Y_f \tag{E-3}$$

$$Z = A_3 \left[Z_p - 2\, Z_s + Z_t \right] + Z_t - Z_f \tag{E-4}$$

$F = 8.051$ = focal length

where

$A_1 = 0.2987$

$A_2 = 93.90$

$A_3 = 0.0892$

$R_p = 53.9$

$T = 66.95$

The terms X_i, Y_i, Z_i, θX_i, θY_i, θZ_i for I = p, s, t, f refer to the translations and rotations in the global X, Y, and Z directions of the primary (p), secondary (s), tertiary (t) and focal plane(f) elements. The coefficients A_j, T, and F are functions of the radius of curvature of the mirrors.

These are given by

$$A_1 = \frac{R_t}{2T - R_t} \tag{E-5}$$

$$A_2 = \frac{R_p}{2} + t_1 \tag{E-6}$$

$$A_3 = \frac{R_t^{\,2}}{\left[R_p - R_t + 2(t_1 + t_2)\right]^2} \tag{E-7}$$

$$F = \frac{R_t\, R_p}{4T - 2R_t} \tag{E-8}$$

$$T = \frac{R_p}{2} + t_1 + t_2 \tag{E-9}$$

where

R_p = radius of curvature of the primary mirror

R_t = radius of curvature of the tertiary mirror

t_1 = axial distance from primary to secondary mirrors

t_2 = axial distance from secondary to tertiary mirrors

The expressions for the translation and rotation of each mirror in global coordinates may be formed in terms of the displacements at the nodes which support the mirrors. These are given by the following equations in which the numerical subscripts indicate specific support nodes.

Primary Mirror:

$$X_p = X_{34} + 1.25\ (Y_{34} - Y_{35}) \tag{E-10}$$

$$Y_p = 0.50\ (Y_{34} + Y_{35}) \tag{E-11}$$

$$Z_p = -0.2143\ (Z_{34} + Z_{35}) + 0.7143\ (Z_{28} + Z_{30}) \tag{E-12}$$

$$\theta X_p = 0.0714\ (Z_{34} + Z_{35}) + 0.0714\ (Z_{28} + Z_{30}) \tag{E-13}$$

$$\theta Y_p = 0.125\ (Z_{34} - Z_{35}) \tag{E-14}$$

$$\theta Z_p = 0.125\ (Y_{35} - Y_{34}) \tag{E-15}$$

Secondary Mirror:

$$X_s = X_{40} \tag{E-16}$$

$$Y_s = Y_{40} \tag{E-17}$$

$$Z_s = Z_{40} \tag{E-18}$$

$$\theta X_s = \theta X_{40} \tag{E-19}$$

$$\theta Y_s = \theta Y_{40} \tag{E-20}$$

$$\theta Z_s = \theta Z_{40} \tag{E-21}$$

Teritiary Mirror:

$$X_t = X_{27} + 0.3750\ (Y_{29} - Y_{27}) \tag{E-22}$$

$$Y_t = 0.50\ (Y_{27} + Y_{29}) \tag{E-23}$$

$$Z_t = 0.7143\ (Z_{27} + Z_{29}) - 0.2143\ (Z_{32} + Z_{33}) \tag{E-24}$$

$$\theta X_t = 0.0714\ (Z_{27} + Z_{29}) + 0.0714\ (Z_{32} + Z_{33}) \tag{E-25}$$

$$\theta Y_t = 0.125\ (Z_{27} - Z_{29}) \tag{E-26}$$

$$\theta Z_t = 0.125\ (Y_{29} - Y_{27}) \tag{E-27}$$

Focal Plane:

$$X_f = X_{11} + 0.6250\ (Y_{11} - Y_9) \tag{E-28}$$

$$Y_f = 0.50\ (Y_9 + Y_{11}) \tag{E-29}$$

$$Z_f = Z_{40} \tag{E-30}$$

$$\theta X_f = 0.10\ (Z_9 + Z_{11}) - 0.20\ Z_{40} \tag{E-31}$$

$$\theta Y_f = 0.125\ (Z_9 - Z_{11}) \tag{E-32}$$

$$\theta Z_f = 0.125\ (Y_{11} - Y_9) \tag{E-33}$$

Vita

Edward Sherman Aldridge was born on 25 August 1958 to Phillip Z. and Hanako Y. Aldridge in Johnson Air Force Base, Japan. After a childhood in the United States, he returned to Japan, graduating from high school at Yokota Air Force Base, Japan in 1976. One year later he entered the University of Southern California. He graduated in June 1981, receiving the degree of Bachelor of Science in Aerospace Engineering. Through the Air Force ROTC, he received a reserve commission and was designated a Distinguished Graduate. Immediately after graduation, he entered the School of Engineering at the Air Force Institute of Technology as his first assignment. He is a member of Tau Beta Pi.

Permanent Address: 7375 Franconia Drive
Fountain, Colorado 80817

UNCLASSIFIED

SECURITY CLASSIFICATION OF THIS PAGE (When Data Entered)

REPORT DOCUMENTATION PAGE

READ INSTRUCTIONS BEFORE COMPLETING FORM

1. REPORT NUMBER
AFIT/GA/AA/82D-1

2. GOVT ACCESSION NO.
AD-A124702

3. RECIPIENT'S CATALOG NUMBER

4. TITLE (and Subtitle)
DECENTRALIZED CONTROL OF A LARGE SPACE STRUCTURE AS APPLIED TO THE CSDL 2 MODEL

5. TYPE OF REPORT & PERIOD COVERED
MS Thesis

6. PERFORMING ORG. REPORT NUMBER

7. AUTHOR(s)
Edward S. Aldridge
2d Lt, USAF

8. CONTRACT OR GRANT NUMBER(s)

9. PERFORMING ORGANIZATION NAME AND ADDRESS
Air Force Institute of Technology (AFIT-EN)
Wright-Patterson AFB OH 45433

10. PROGRAM ELEMENT, PROJECT, TASK AREA & WORK UNIT NUMBERS

11. CONTROLLING OFFICE NAME AND ADDRESS
Flight Dynamics Laboratory (AFFDL/FIBRA)
Wright-Patterson AFB OH 45433

12. REPORT DATE
December 1982

13. NUMBER OF PAGES
137

14. MONITORING AGENCY NAME & ADDRESS(if different from Controlling Office)

15. SECURITY CLASS. (of this report)
Unclassified

15a. DECLASSIFICATION/DOWNGRADING SCHEDULE

16. DISTRIBUTION STATEMENT (of this Report)

Approved for public release; distribution unlimited.

17. DISTRIBUTION STATEMENT (of the abstract entered in Block 20, if different from Report)

18. SUPPLEMENTARY NOTES
Approved for public release; IAW AFR 190-17

Approved for public release: IAW AFR 190-17.
LYNN E. WOLAVER
Dean for Research and Professional Development
Air Force Institute of Technology (ATC)
Wright-Patterson AFB OH 45433

4 JAN 1983

19. KEY WORDS (Continue on reverse side if necessary and identify by block number)

Closed Loop Systems	Actuators	Stability
Control Theory	Equations of State	Control Systems
Decoupling (Interaction)	Riccati Equation	
Decentralization	Feedback	

20. ABSTRACT (Continue on reverse side if necessary and identify by block number)

Modern optimal control methods are used to develop a multiple input multiple output controller which is applied to two models--CSDL 1 and CSDL 2. NASTRAN is employed to generate modal approximations of both models. Twelve selected modes are analyzed in both models. The control problem is formulated in state vector form and full state feedback is implemented. The state is represented as modal amplitudes and rates and the feedback gains are generated using steady state optimal regulator theory. State estimates are provided

DD FORM 1 JAN 73 1473 EDITION OF 1 NOV 65 IS OBSOLETE

UNCLASSIFIED

SECURITY CLASSIFICATION OF THIS PAGE (When Data Entered)

by means of a deterministic observer. System outputs are obtained by position sensors and control is applied by point force actuators. Control and observation spillover are eliminated using singular value decomposition. Decentralized control is accomplished using three and four controllers on both models. Conditions for which the stability of each model is assured are developed. On both models, there is a significant increase in the closed loop damping achieved. Losses in controllability and observability are noticed during spillover elimination. Full controller decoupling is achieved and stability is maintained.

DAT
ILM