AD-A124 551 AN ADAPTIVE AUTOMATIC HF RADIO(U) SRI INTERNATIONAL MENLO PARK CA N J CHANG ET AL. 01 DEC 80 DNA-5570F DNA001-79-C-0364 1/2

UNCLASSIFIED F/G 17/2.1 NL

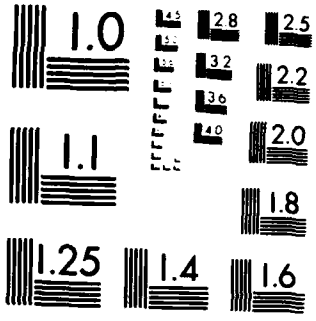

MICROCOPY RESOLUTION TEST CHART
NATIONAL BUREAU OF STANDARDS-1963-A

(12)

DNA 5570F

AN ADAPTIVE AUTOMATIC HF RADIO

Norman J. F. Chang
John W. Ames
Georgellen Smith
SRI International
333 Ravenswood Avenue
Menlo Park, California 94025

AD A 124551

1 December 1980

Final Report for Period 1 June 1979—1 December 1980

CONTRACT No. DNA 001-79-C-0364

DTIC
FEB 17 1983
H

APPROVED FOR PUBLIC RELEASE;
DISTRIBUTION UNLIMITED.

THIS WORK WAS SPONSORED BY THE DEFENSE NUCLEAR AGENCY
UNDER RDT&E RMSS CODE B322079464 S99QAXHB05311 H2590D.

DTIC FILE COPY

Prepared for
Director
DEFENSE NUCLEAR AGENCY
Washington, DC 20305

83 02 017 007

Destroy this report when it is no longer needed. Do not return to sender.

PLEASE NOTIFY THE DEFENSE NUCLEAR AGENCY, ATTN: STTI, WASHINGTON, D.C. 20305, IF YOUR ADDRESS IS INCORRECT, IF YOU WISH TO BE DELETED FROM THE DISTRIBUTION LIST, OR IF THE ADDRESSEE IS NO LONGER EMPLOYED BY YOUR ORGANIZATION.

UNCLASSIFIED

SECURITY CLASSIFICATION OF THIS PAGE (When Data Entered)

REPORT DOCUMENTATION PAGE

READ INSTRUCTIONS BEFORE COMPLETING FORM

1. REPORT NUMBER
DNA 5570F

2. GOVT ACCESSION NO.
A124551

3. RECIPIENT'S CATALOG NUMBER

4. TITLE (and Subtitle)
AN ADAPTIVE AUTOMATIC HF RADIO

5. TYPE OF REPORT & PERIOD COVERED
Final Report--For Period
1 Jun 79-1 Dec 80

6. PERFORMING ORG. REPORT NUMBER
SRI Project 8710

7. AUTHOR(s)
Norman J. F. Chang
John W. Ames
Georgellen Smith

8. CONTRACT OR GRANT NUMBER(s)
DNA 001-79-C-0364

9. PERFORMING ORGANIZATION NAME AND ADDRESS
SRI International
333 Ravenswood Avenue
Menlo Park, California 94025

10. PROGRAM ELEMENT, PROJECT, TASK AREA & WORK UNIT NUMBERS
Subtask S99QAXHB053-11

11. CONTROLLING OFFICE NAME AND ADDRESS
Director
Defense Nuclear Agency
Washington, D.C. 20305

12. REPORT DATE
1 December 1980

13. NUMBER OF PAGES
102

14. MONITORING AGENCY NAME & ADDRESS (if different from Controlling Office)

15. SECURITY CLASS (of this report)
UNCLASSIFIED

15a. DECLASSIFICATION DOWNGRADING SCHEDULE
N/A since UNCLASSIFIED

16. DISTRIBUTION STATEMENT (of this Report)
Approved for public release, distribution unlimited.

17. DISTRIBUTION STATEMENT (of the abstract entered in Block 20, if different from Report)

18. SUPPLEMENTARY NOTES
This work was sponsored by the Defense Nuclear Agency under RDT&E RMSS Code B322079464 S99QAXHB05311 H2590D.

19. KEY WORDS (Continue on reverse side if necessary and identify by block number)
HF radio
Sky-wave propagation
Adaptive HF radio communication
Nuclear blackout

20. ABSTRACT (Continue on reverse side if necessary and identify by block number)

This report describes the preliminary design of an automatic, adaptive HF radio network for use in a post-nuclear environment. The radio features a multipath-resistive signaling waveform and a linking protocol that will enable an inexperienced operator to establish contact with any station in its network, provided that propagation support between the two stations exists.

If propagation support does not exist on any of the assigned channels, the radio will continually cycle through all of its assigned channels until

DD FORM 1 JAN 73 1473 EDITION OF 1 NOV 65 IS OBSOLETE

UNCLASSIFIED

SECURITY CLASSIFICATION OF THIS PAGE (When Data Entered)

contact is established, or until the attempt is aborted. Thus, contact will be made as soon as propagation conditions permit.

An adaptive radio system of the type described here will provide significant improvement over conventional HF communication systems in its linking protocol and its ability to adapt to changing propagation conditions.

The radio is expected to be low in cost and highly portable so that it can be proliferated easily to provide emergency communications between users.

The radio is not intended to be used for extended exchanges nor to be competitive with the sophisticated systems currently being considered for MEECN applications in the extremely hostile propagation and jamming environment that follows immediately after a nuclear attack.

The adaptive radio is intended for brief exchanges or as an order-wire for communications reconstitution to reestablish dependable communication in the days and weeks after an attack when all other forms of communications are curtailed because of massive damage to critical components.

Accession For
NTIS GRA&I ☑
DTIC TAB ☐
Unannounced ☐
Justification
By
Distribution/
Availability Codes
Dist | Avail and/or Special
A

DTIC COPY INSPECTED 2

TABLE OF CONTENTS

Section		Page
	LIST OF ILLUSTRATIONS	3
	LIST OF TABLES	4
1	INTRODUCTION	5
2	ADAPTIVE RADIO CONCEPTS AND DESIGN PHILOSOPHY	8
3	SPREAD-SPECTRUM CONCEPTS	13
	3.1 Benefits of a Spread-Spectrum System	13
	3.1.1 Processing Gain	13
	3.1.2 Multipath Separation	15
	3.1.3 Selective Addressing	17
	3.2 Modulation and Coding	17
4	OPERATIONAL DESCRIPTION OF THE ADAPTIVE HF RADIO	20
	4.1 System Description	20
	4.2 Linking Protocol	25
	4.3 Waveform Format	30
	4.4 Synchronization	33
	4.5 Options for Improved Capabilities	35
5	PROPAGATION EFFECTS	37
	5.1 Multipath Effects	40
	5.2 Nuclear Propagation Effects	43
	5.2.1 Absorption	46
	5.2.1.1 Absorption Produced by Multimegaton Surface Detonations	46
	5.2.1.2 Absorption Produced by High-Altitude Detonations	47
	5.2.2 Traveling Waves	47
	5.2.3 Sporadic E	48
	5.2.4 Multipath and Doppler	49
	5.3 Miscellaneous Propagation Effects	51

TABLE OF CONTENTS (Concluded)

Section		Page
6	DETAIL BLOCK DIAGRAM OF THE ADAPTIVE HF RADIO	52
6.1	Functions of the Microprocessor Controller	53
6.2	Modulator	53
6.3	Demodulator	54
6.4	Spectrum Compressor (Barker Codes)	58
6.4.1	Charge-Transfer Device	58
6.4.2	Analog-Digital Signal Processor	63
6.4.3	Chip Synchronization	64
6.5	Detection Logic	67
6.6	Character Decoder	71
7	CONCLUSIONS	75
	BIBLIOGRAPHY	76
	GLOSSARY	78
APPENDIX		
	QUICK-LOOK TEST PLAN FOR ADAPTIVE-CHANNEL-SELECTION HF RADIO	81

LIST OF ILLUSTRATIONS

Figure		Page
1	Proposed Adaptive HF Automatic Radio	21
2	Format of Interrogation Waveform	24
3	Flowchart for Listen Mode	26
4	Flowchart for Call Mode	29
5	Format of Listen Mode	32
6	Mode Geometry	39
7	Ionospheric Multipath Pulse Distortion	42
	(a) Tracing of a Typical Winter's Day Ionogram over a 1566-km Midlatitude Path	42
	(b) A Scope Presentation of Received 17-MHz Signal	42
8	The Time-Delay Distribution between One-Hop and Two-Hop Signals for East-West Paths of 500, 1000, and 2000 km Across the United States	43
9	Spread-Spectrum Modulation	55
10	Synchronous Demodulator	56
11	A Seven-Stage Binary Analog Correlator Using Sample-and-Holds and Tapped-Switches Controlled by a Static Shift Register	60
12	Correlation on a 7-Bit Barker Sequence	62
13	Chip Synchronizer Waveforms	65
14	Chip Synchronization Circuit	66
15	Output of Barker Decoder for Two Consecutive Marks	68
16	Detection Logic Flowchart	70
17	UART Data Format and Start-Bit Detection	72
18	Simplified Functional Block Diagram of a UART	73
A-1	Operational Test System for Automated Radio Transceiver	84

LIST OF TABLES

Table		Page
1	Summary of Parameters Used in Waveform Description	27
A-1	Control Function Sequence for Unit (Program) "A"	88
A-2	Control Function Sequence for Unit (Program) "B"	89
A-3	Task Performance Timetable	93

1 INTRODUCTION

It is evident that a means of communication is needed to coordinate recovery and initial activity of U.S. military and civil forces in the event of a major nuclear attack. This requirement is distinct from that of transmitting an Emergency Action Message (EAM) through intense jamming and a concurrent nuclear barrage. The EAM requirement is for extremely high reliability to a relatively small number of terminals, with cost only a secondary factor. Civil- and military-force reconstitution communication equipment must be supplied to a much larger number of facilities and, as a practical matter, is not likely to be purchased if the cost is considered "major" in comparison to other emergency equipment.

The most promising solution to the problem of providing enduring communications in a highly disturbed propagation environment is a proliferated communications network of inexpensive automatic channel-finding (adaptive) HF transceivers. The principal strength of this concept is the ability of low-cost terminal equipment to provide communications from line of sight to several thousand kilometers without reliance on intermediate relay points.

The most vulnerable hardware component of an HF radio system, the antenna, can be made unobtrusive and, if damaged or destroyed, can be reconstructed quickly.

The dependence of HF systems on ionospheric refraction (for propagation beyond ground-wave range), makes them particularly vulnerable to nuclear disturbances in the ionosphere, yet natural processes cause the ionosphere to heal itself in less time than required to replace critical satellite facilities or buried landlines. Additionally, modern channel evaluation and selection techniques can significantly reduce the duration of nuclear-caused radio blackout in the postabsorption phase relative to that expected for conventional HF systems.

This report presents preliminary design details for a low-cost HF communication system that adapts to changing propagation conditions. The basic link concept is cooperative operation by small HF radio sets that combine testing of several potential channels with selective calling to initiate each new exchange of communication. The type of communication envisioned is intermittent, short, two-way simplex exchanges. On crucial military links, long or continuous exchanges could be coordinated on the automatic system, but conducted on conventional equipment.

The system described here is not intended for use in lieu of the highly sophisticated systems currently being considered for minimal essential emergency communication network (MEECN) applications in the extremely hostile propagation and jamming environment immediately after a nuclear attack. By relaxing the requirement for operability at early times and focusing on the many needs for dependable, lasting communications in the subsequent days and weeks, it is possible to eliminate many expensive hardware components, minimize the bandwidth required, and simplify the protocols. In addition, signaling techniques can be selected to yield substantial processing gain, in contrast to the brute-force methods that are being contemplated for use at early times.

The system described can be easily proliferated, can readily be transported, and can be operated by a layman. For paths up to approximately 3000 km, low-cost equipment can provide dependable service in the nuclear-disturbed environment, once the devastating effects of absorption have subsided.

Philosophies that have guided the design of the adaptive radio are discussed in the next section. A discussion of the spread-spectrum concept and the benefits derived from its use then follows in Section 3.0. Section 4.0 contains a brief operational description of the automatic radio and describes the major components of such a system; protocols, waveform format and synchronization are also discussed. Propagation effects, both natural and nuclear, that affect the design and operation of the HF automatic radio, are discussed in Section 5.0. The details of the automatic HF radio in the form of block diagrams are presented in

Section 6.0. Conclusions are given in Section 7.0, followed by an appendix which outlines a plan for preliminary on-the-air testing of some of the adaptive radio concepts.

2 ADAPTIVE RADIO CONCEPTS AND DESIGN PHILOSOPHY

Historically, establishing an HF sky-wave link between two points has required prior contact, or an element of chance. The best approach to establishing a link has been to prearrange a frequency-time calling schedule, then monitor a small set of channels in a band of frequencies likely to provide propagation support. Assuming that the intended receiving operator is in fact monitoring the correct channels at the correct time, or simultaneously, using a large bank of receivers, the initiating operator would call on different frequencies in turn until a reply is received. This procedure requires skilled, full-time operators, requires often a great deal of time, and assumes that a propagating sky-wave frequency between the two points is at least approximately known a priori. This assumption is normally reasonable because experience, logs of previous contacts, or ionospheric predictions can be consulted; however, to be successful, these methods must account for the temporal variability of the ionosphere. They often fail during natural ionospheric disturbances, particularly during an ionospheric storm.

For several days following a nuclear exchange, the ionosphere will be highly variable; usable frequencies in the HF, and possibly the lower VHF, range may span only a narrow band of frequencies, perhaps as small as half a MHz. Furthermore, these bands may be highly transient, coming and going with time scales on the order of minutes. Under these circumstances, a manual linkup between two stations is improbable. The objective of the research leading to this report has been to develop signaling techniques that can provide useful sky-wave-based communication in the presence of and during the recovery from such conditions.

Establishing and maintaining successful communications using sky-wave propagation either in the absence of skilled operators with operating experience over the paths of interest, or when the ionosphere is highly disturbed, requires an adaptive system with a linking protocol.

The adaptive radio described in this report features adaptability to uncertain propagation conditions, a multipath-resistive signaling waveform, operational simplicity, flexibility, and low cost. It uses a moderately large number of assigned, or preselected, channels spaced more-or-less uniformly throughout the 2- to 50-MHz band. Approximately 20 to 50 channels are used.

All stations in a given network are normally in a LISTEN mode, where all assigned channels are periodically checked for the presence of a set of coded call letters that are unique to that station. Communication after an idle period or radio blackout is initiated by entering the call letters of the station desired (selective addressing) and pressing CALL. This initiates an automated calling sequence that, starting at the highest assigned frequency, cycles through each of the assigned channels, without requiring interstation synchronization and at a much slower rate than the LISTEN cycle, until a response is obtained.

Prior to transmission of the call letters, the status of each channel is checked to ensure that the channel is not in use or obstructed by interference. Therefore, the first clear channel on the assigned list that can support propagation will be selected. When linkup is established a READY light is activated, and the system reverts to a conventional simplex mode for voice or teleprinter exchange on the automatically selected channel. If there is no response, it means that all assigned channels are in use or that there is no propagation support on any channel. The calling sequence will then continually cycle through all assigned channels until suitable propagation conditions exist.

Once contact is made the quality of the link becomes an important factor. Interference, multipath, or selective fading, for example, may degrade a selected channel to such a point that effective communication is not possible. Thus, in addition to establishing a link, the quality also must be maintained. Automatic link maintenance is not considered in this preliminary design of the adaptive radio because we assume that the message is short in comparison to any temporal variability of the ionosphere.

In the design of signaling waveforms and codes to provide linkup between two stations, detection probability is matched with channel margin; if the CALL-mode calling sequence is detected, we are assured of that minimum channel margin. This criterion avoids the use of channels where severe fading or other deleterious propagation effects exist. By choosing only "good" frequencies we avoid the necessity of mitigating these effects.

Because the automatic radio is expected to operate in an adverse environment, where propagation anomalies may be natural or nuclear, the signaling waveform must be adaptable and dependable, that is, robust. This characteristic is achieved by using simplified spread-spectrum techniques in which the signal is spread so that it encompasses the available channel bandwidth on transmission. On reception the signal is compressed to the information bandwidth, resulting in a processing gain.

The adaptive radio discussed in this report represents a basic system that provides short, simplex exchanges between two or more stations in a given network provided that propagation support between them exists. Many desirable features like automatic link maintenance or interrupt capability for a busy station are not included in this report because they would greatly increase the complexity and cost of the preliminary design effort, and to some extent, the ultimate cost of the radio. The modular design and microprocessor controller, however, generally allow modifications and additions to be made with a minimum impact on the hardware.

If the number of stations using a common set of channels (a network) is small, and if their contacts are few and short, busy stations or channels are not a problem. As demands on the network increase, however, provision must be made for accommodating conflicts.

An approach to accommodate multiple users on a link basis is to provide stations likely to have several correspondents with two terminals, one of which is reserved solely for receiving calls when the other is in use. The contact in progress is briefly interrupted, callers are asked to stand by (call-waiting), then contacted when the call in

process was completed. In the meantime, the secondary receiver would resume scanning.

At conventional communication stations, the automatic radios can be used to provide order-wire service for reconstitution of conventional, manually tuned facilities that carry long-term traffic. If the long-term traffic is interrupted because of temporal changes in the environment, the adaptive radio can be used to reestablish contact.

The maximum number of stations in a given network is determined by the number of unique call letters [station identification (ID)] that can be formed from the class of 10 digits and 26 letters of the alphabet. For a two-symbol ID 1296 stations can be accommodated. More stations can be accommodated with the addition of extra symbols to the ID, but a larger number of potential users also increases the likelihood of conflict over available channels. Addition of more channels to a given network will reduce the probability of a conflict, but this will also increase the response time to a call because both transmitter and receiver must now cycle over more channels.

The natural hierarchy of military organizations lends itself to controlled netting of adaptive radios. A top level network, containing perhaps 20 stations, could use one set of about 30 channels for communication among its members. Top level stations that have extensive conventional HF equipment and numerous operators can use the adaptive units primarily for order-wire coordination.

Each top level station would be a network control for a number of force units under its command. Each such network would use a different set of channels. The top level, network control stations would, therefore, have at least two adaptive sets; one for the top level network, and one for their own subnetwork. This organization can be continued for several layers. The availability of frequencies ought not be a limiting factor because the normal peacetime rules, and uses, would not apply.

The adaptive sets, then, will be the primary link for smaller facilities and forces, and an order-wire, communication-coordination link for larger units.

3 SPREAD-SPECTRUM CONCEPTS

With today's rapid advances in solid-state technology, spread-spectrum systems are becoming cost-effective and of practical size. One reason for using a spread-spectrum system as opposed to a narrowband system is the spread-spectrum system's ability to reject interference and hence to operate in a hostile environment. Spread-spectrum systems can do this because their transmitted power is distributed broadly resulting in low-power density across the occupied band. Upon reception, the compression process returns the signal to its original bandwidth and spreads the interference. Provided that the spectrum of the interfering signal is narrow in comparison with the signal spectrum, the desired signal is not seriously degraded, and the interference is reduced.

3.1 Benefits of a Spread-Spectrum System

3.1.1 Processing Gain

A spread-spectrum system is one in which the spectrum of the transmitted signal occupies a bandwidth at least ten times greater than needed to convey the message. Additionally, the modulation which establishes the signal bandwidth should be independent of the information itself (Dixon, 1976a). In one form of spread-spectrum system, called direct sequence, the rf carrier can be visualized as being modulated twice, first by the information to be conveyed and second by a spreading modulation. The latter modulation typically imparts no information on the carrier and is used solely to increase the signal bandwidth. Upon reception the spreading modulation is removed, and the signal is compressed to the information bandwidth of the desired signal by using matched filter or correlation techniques. This results in a processing gain roughly given by the ratio of the RF transmission bandwidth to the information bandwidth. This improvement is realized with respect to both interference and noise as long as the interference in the rf channel is

not highly correlated with the chip sequence used to encode a particular message bit. After removal of the spread-spectrum modulation, the message is demodulated by conventional means.

Interference rejection is directly related to processing gain. If a particular system requires a minimum acceptable output signal-to-noise ratio (SNR) of $(SNR)_{OUT}$ dB, a jamming margin, or allowable jammer-to-signal ratio, M_j, can be defined as

$$M_j = G_p - L_{SYS} - (SNR)_{OUT} \quad , \tag{1}$$

where G_p is the processing gain and L_{SYS} is the system implementation losses, typically 1 or 2 dB (Dixon, p. 5, 1976b). A 20-dB jamming margin means that the receiver can successfully operate in an environment in which the desired signal is 100 times smaller than the interference.

Typical received signal SNR requirements for analog signals utilizing a 3-kHz bandwidth are 5 to 10 dB for barely intelligible voice, and 25 to 35 dB for telephone-quality voice (Carlson, p. 149, 1975). Digital signal quality is measured in terms of an error rate, or the percentage of received information characters read incorrectly. Acceptable teletype communication for force reconstitution or order-wire purposes may have an error rate as high as 1 in 50 characters, or approximately 1-bit error in 400 if there is some a priori knowledge of the language and text material. This bit error rate, i.e., 1 in 400, corresponds to an SNR of 23 dB for a fading differentially coherent phase shift keying (DPSK) system (Schwartz et al., p. 408, 1966).

The ability of a spread-spectrum system to function successfully in the face of interference relies on the fact that in the compression process, the desired signal, when properly correlated against a replica of itself, is compressed to its information bandwidth in the frequency-domain, which increases its power density. In contrast an uncorrelated interfering signal is spread to the bandwidth of the unprocessed direct sequence signal resulting in a lower power density. Thus, when the compressed signal is passed through a bandpass filter that is just wide

enough to pass the information, the signal power is largely retained, but most of the power contained in the undesired signal is rejected.

3.1.2 Multipath Separation

In addition to interference rejection, the wide-band rf waveform provides the ability to time-resolve multipath signals using correlation or matched filter techniques. Once separated, these signal components can be combined to reduce signal fading over time and to improve signal-to-noise ratio. Hence, instead of regarding multipath as a nuisance whose effects are to be suppressed, it can be made an asset. The RAKE system described by Price and Green (1958) is one application of this philosophy. Similarly, the adaptive radio also exploits the multipath signals by using the information contained in the time-resolved multipath signals in a decision process to improve system performance.

When the multipath cannot be resolved, because of insufficient bandwidth, or when the symbol duration is much smaller than the multipath spread, equalization techniques (Monsen, 1974; and Morgan, 1978), can be used to combat the effects of multipath. These techniques are used extensively in wire transmission. Although similar techniques are of value in HF skywave communications, they are not to be considered in the adaptive radio because of their complexity and the availability of an effective alternative approach. The rationale is that given a sufficient number of channels, at least one good channel should exist. If the ionosphere is too highly disturbed and there is no propagation support on any channel, the success of the adaptive radio depends on eventual improvement of the ionosphere with time over at least a limited frequency range. With such improvements the adaptive radio should be able to establish linkup quickly. (On HF circuits good channels are generally chosen so that they are near, but not too close to, the maximum usable frequency (MUF) to minimize absorption, multipath, and fading.) If this channel can be found then the complex task of mitigation by equalization is avoided. Thus, instead of trying to compensate for a bad or marginal channel, the adaptive radio seeks out the "good" channel, using the basic spread-spectrum approach because of its power and relative simplicity.

Another benefit of utilizing the entire 3-kHz bandwidth allotted for the radio is that selective fading tends to be a narrow-band phenomenon, and a suitable wideband signal will experience frequency selective fading only over small portions of the band. Thus, the total received signal tends to be constant over time, and the gain in overall communication reliability is similar to that obtained with frequency diversity.

Intersymbol interference occurs when a particular symbol (e.g., mark or space) is overlapped by the delayed components of adjacent symbols. Such interference increases the detection error rate and is a serious limitation to communications. In a spread-spectrum system intersymbol interference may be suppressed even if the same chip pattern is reused for each symbol, provided that the multipath spread is less than a symbol duration. (An example of this situation will be discussed in a later section in connection with Figure 7.) If the multipath spread is greater than a symbol duration, intersymbol interference can still be suppressed if the chip pattern changes from symbol to symbol. Thus, if two different codes with good mutual discrimination were alternately used for the chip modulation, adjacent symbols, even if they overlapped on reception, could be distinguished through correlation. This use of two codes effectively doubles the maximum transmission rate because the multipath spread can now extend over two symbol lengths before intersymbol interference occurs.

Alternatively, for a given transmission rate the information rate can be increased by the use of M-ary, rather than binary signaling. This increase, however, is paid for by the greater complexity of M-ary receivers, compared with receivers designed for the more conventional binary modulation. For this reason if the information rate must be increased beyond about 100 to 200 baud, the use of two or more different codes for chip modulation is preferred for the present application over M-ary modulation.

3.1.3 Selective Addressing

Selective addressing is possible through assignment of a unique spreading-modulation code to each receiver. Using this technique, an interrogator can select any desired receiver simply by transmitting that receiver's code. The signal will appear only as noise to other receivers in the network. By using different chip patterns, multiple users can coexist in the same radio channel with greatly reduced interference. The success of this "code division multiple access" capability depends on the ability to receive one chip pattern while rejecting others as noise, using matched filter or correlation techniques. The cost of selective addressing at the waveform level, however, is that codes with good correlation properties (necessary to minimize false alarms) that can accommodate a large number of stations (a few hundred or more) are lengthy. This increases the message transmission time and the processing requirement of the compression hardware, with a corresponding increase in cost. Although this selective addressing option will not be exploited by the proposed adaptive radio, its potential is recognized and the option of future implementation of this feature is retained by the radio design.

In the adaptive radio a gross form of selective addressing is provided by the code used for chip modulation. An optimum code is chosen for the spreading modulation based on its correlation properties. All receivers in a given network will use the same code, but other networks could use a different code; therefore, only receivers in the correct network will respond to the transmitted signal. At the message level, however, the compressed signal will be decoded by all the receivers in a given network, but only the receiver with the correct address will respond further.

3.2 Modulation and Coding

Operation of the automatic HF radio can be separated into three distinct phases, CALL, LISTEN, and TALK. During the CALL and LISTEN phases the system functions like a set of transponders, sending a burst of information and listening for a response. When contact is established the

system switches to TALK. In this phase the system can be used in the conventional simplex manner, or at the option of the user, the spread-spectrum waveform used in the CALL phase can be used for message traffic. Operation of the system in the TALK phase will not be discussed here, because it can be completely conventional. Rather, the modulation and coding used in the CALL and LISTEN phases will be described.

The choices of modulation and code rate depend on the transmission channel in which they are to be used. Consideration is given to the bandwidth necessary (a 3-kHz bandwidth is assumed) and the processing gain required. Although there are many different codes that can be used, the choice of a particular code is based on ease of implementation, its correlation properties, and amount of processing gain required for a particular kind of transmission. The particulars of the coding and modulation used have direct bearing on the other components in the system.

Biphase phase-shift keying (PSK) modulation is used to spread the spectrum of the message-bearing signal. The modulation is such that the resulting rf carrier consists of equal-length segments that differ from each other only in phase by 0° or 180°. Other types of spreading modulation, such as amplitude modulation (AM), or frequency-shift keying (FSK), can be used, but PSK is chosen because it is easy to generate and, for a given signal-to-noise ratio, has a lower binary error probability than either AM or FSK modulation. In addition, for our applications PSK is a better choice than FSK because of the latter's greater vulnerability to narrow-band interference and multipath.

Based on its ideal correlation properties, the 13-bit Barker code is chosen for chip modulation. The minor peaks of the autocorrelation function over one period have only two nonzero levels, and these do not exceed unity, whereas the self-correlation peak amplitude is 13. Use of a 13-bit Barker code will provide a processing gain of 10 dB. If more gain is required, or if greater discrimination between different codes is required, a longer code, such as the maximal length code, can be used. Like Barker codes, these also have good correlation properties, but in

contrast to Barker codes, which have a maximum length of 13 bits, maximal length codes have no length restriction. Alternatively, Barker codes can be combined to achieve a code length greater than 13 bits (Hollis, 1967). The suitability of any code in terms of its correlation properties and range-Doppler ambiguity (Cook and Bernfield, 1967), however, must be assessed in terms of the system requirements. In addition, because the bandwidth is fixed, a longer code will also result in a reduced data rate.

4 OPERATIONAL DESCRIPTION OF THE ADAPTIVE HF RADIO

4.1 System Description

Figure 1 shows a block diagram of the proposed adaptive radio. The receiver-transmitter unit, shown as two separate blocks in Figure 1, can be a commercial or military transceiver unit with provisions for remote control. Suitable transceiver units appear to be the Model HF-380 general coverage transceiver, the military airborne model 728, or the ARC-190, all manufactured by Rockwell International. These units have a control interface option that can be connected to a microprocessor for frequency control. Watkins-Johnson and RACAL manufactured receivers (WJ-8718 and WJ-8888B, and RA6790 and RA6772E, respectively) appear to be suitable, but transmitters are not provided with these units.

The transmitter basically consists of a synthesizer and modulator followed by an amplifier and in some cases an antenna coupler. The design of the transmitter should permit rapid channel selection. The tuning rate of available units can vary from tens of milliseconds to about one second. For example, transmitter tuning time for the ARC-190 is about 35 ms while the tuning time for the Model 728 is about 1 s. The significantly faster tuning rate for the former is accomplished by the use of preset tuning that provides switching of reactive tuning elements into or out of the antenna matching network, according to stored instructions. The ARC-190 has provision for tuning a nonresonant antenna, while the HF-380 requires a matched load, or a separate antenna coupler.

The Model 728 and the ARC-190 have 400 W PEP output power, while the HF-380 has 100 W. These power levels are adequate for our tests of the adaptive radio concept.

Major additions to the transceiver or transmitter/receiver are indicated in Figure 1. The blocks shown represent functional rather than physical divisions and include the following: microprocessor controller;

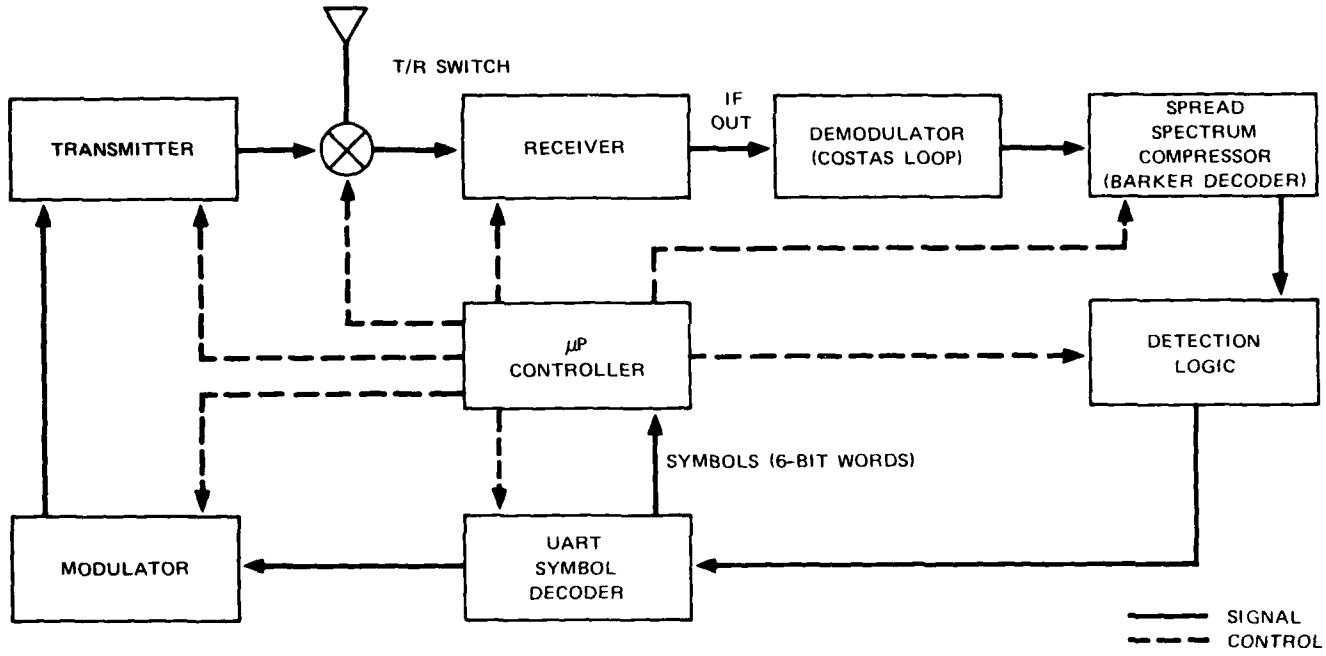

FIGURE 1 PROPOSED ADAPTIVE HF AUTOMATIC RADIO

modulator; demodulator; spread-spectrum compressor; detection logic; and symbol decoder. A brief description of the functions performed by each of these blocks will be given below. Detailed block diagrams and operational details will be given in Section 6.

The major control and signal processing components of the adaptive HF radio will probably occupy a unit of 1 or 2 cu ft in volume, separate from the transceiver. The unit will be self-contained and connected to the transceiver unit via the interface connection. Although the necessary components could conceivably be made to fit within the transceiver or receiver unit, the anticipated control and indicator hardware can be better accommodated in a separate package. In addition, with this approach, if the adaptive radio unit is removed, the transceiver can still be operated in a conventional manner. Each site will generally have one such unit connected to an appropriate broad-band antenna. Space diversity is not envisioned at these sites because the antennas must be unobtrusive and easy to erect. The radio should be designed so that in an emergency a simple whip antenna will suffice; therefore, the transmitter should include a suitable antenna coupler.

All control and operator interface will be handled by the controller. A microprocessor forms the heart of this module. Use of a microprocessor, or software implementation of control and signal processing operations, provides maximum flexibility in tailoring the automatic radio for use under different conditions and under changing requirements. Thus, changes in signal processing algorithms, codes, and control functions can simply be made by modifying the software with minimal, or no hardware changes. In addition, because the microprocessor will handle many decisions and control functions normally performed by a skilled operator, use of the radio will be simplified and can be operated by almost anyone.

Serial-to-parallel and parallel-to-serial conversions are provided by the symbol decoder. The major component in this module is a universal asynchronous receiver/transmitter (UART), which incorporates in a single large-scale integration (LSI) device all the components necessary to convert the parallel format used by the microprocessor into the serial format used in data transmission.

When used as a receiver, the UART converts serial start, data, parity, and stop bits to parallel data, verifying proper code transmission by means of the parity and stop bits. In other words, the UART performs the difficult and important task of breaking a continuous stream of received binary data into recognizable multibit symbols.

When used as a transmitter, the UART converts parallel data into serial format and automatically adds start, parity, and stop bits.

When a call is initiated, the symbol decoder converts the ID of the desired station into serial form, which is then combined with a spreading code in the modulator, and the result is used to modulate the rf carrier. The resulting PSK signal is then amplified by the transmitter and radiated.

In the receive mode the PSK waveform is converted to a baseband signal by means of a Costas loop (Costas, 1956). The resultant demodulated signal consists of a stream of mark-space transitions, but because there is a 0° and 180° phase ambiguity in the demodulation process, mark and space are also ambiguous.

This problem is overcome by transmitting a known reference in the form of an eight-bit preamble consisting of all "marks" ahead of each two character ID, as shown in Figure 2. Because this particular combination of bits does not occur in the ID code, the preamble can be recognized and used as a "mark" reference and to aid the UART in synchronizing with the serial data stream.

The spreading modulation is removed with a Barker decoder. Two methods appear to be suitable--one uses a bucket-brigade device [binary-analog correlator (BAC)], and the other uses the recently developed analog-digital signal processor (INTEL 2920). The former offers a simple method of decoding the spread signal and is particularly attractive if real-time changes in the chip pattern are necessary.

The INTEL 2920 analog-digital signal processor offers 54 dB of dynamic range and also appears to be a good correlator candidate. The INTEL 2920 is an analog device with regard to input-output, but all internal signal processing operations are digital, under control of a program

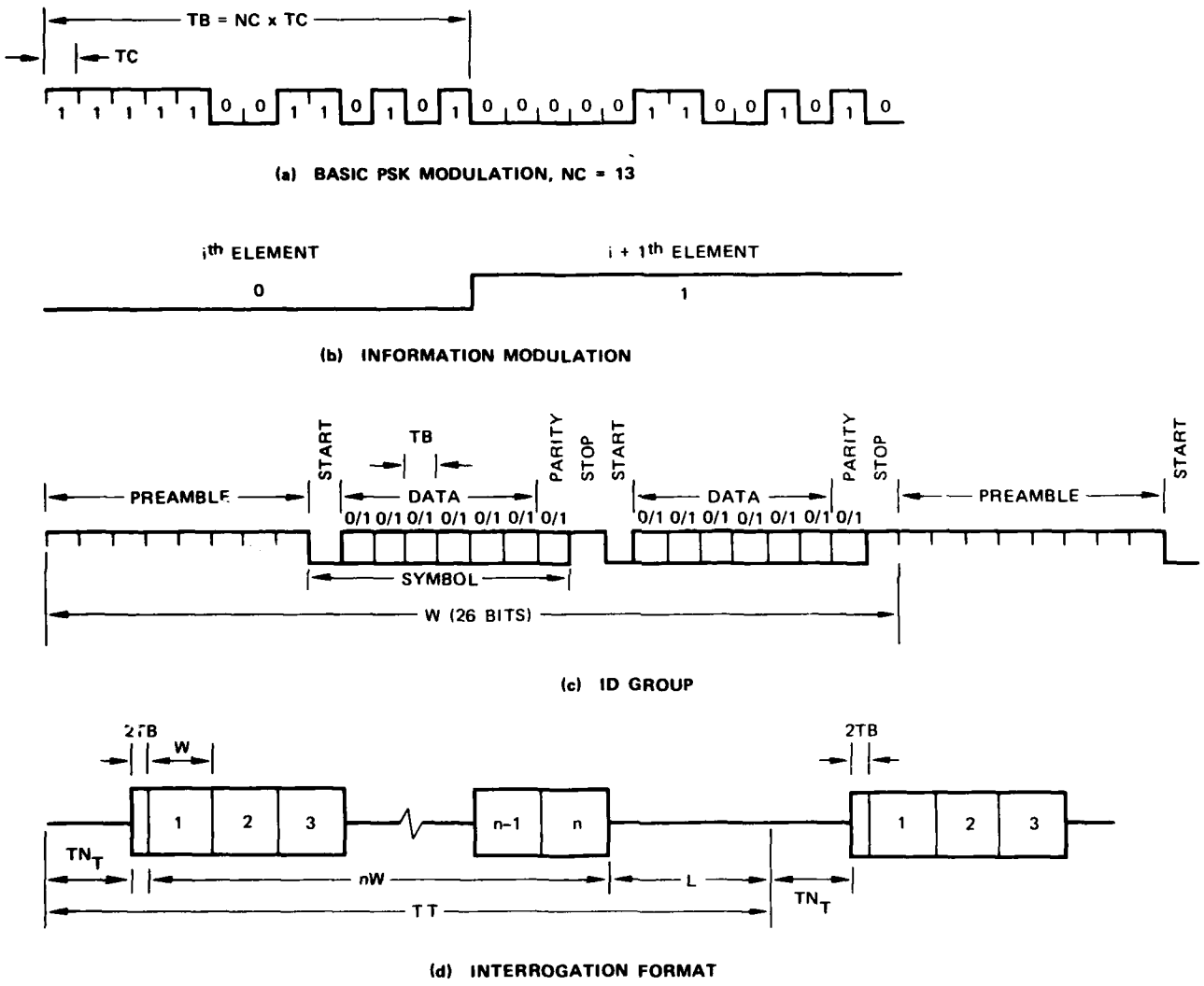

FIGURE 2 FORMAT OF INTERROGATION WAVEFORM

entered by means of an on-board erasable read only memory (EPROM). Thus, the advantages of accurate, stable, and flexible digital processing are inherent in this device.

Mark-space decisions are made by a software algorithm. Because of the bandwidth used, multipath mode separations greater than the inverse of the chip rate (0.667 ms) will be resolved, and within a given symbol duration returns from the various multipaths will be evident (see for example, Figure 7 in Section 5). Some of the echoes will be well defined in time and nonfading; others will be affected by selective fading. Still other apparent signal pulses will be spurious interference responses. Because true multipath signals have high symbol-to-symbol correlation, noncorrelating interference can be eliminated by the algorithm described in Section 6.5.

4.2 Linking Protocol

Each station is assigned an ID consisting of a unique set of two symbols from the class of 10 digits and 26 letters of the alphabet. Hence, 36 X 36 = 1296 different stations can be addressed. (Addition of a third symbol will expand the number of addressable stations to 46,656 with about a 30-percent increase in the time required to cycle through all assigned channels.)

Frequencies for each assigned channel are stored in programmable read only memory (PROM) and thumbwheel switches that are read by the controller. The latter have an advantage in that they can be changed in the field, but are error prone. Because there will probably be a moderately large number of assigned channels, PROMs are better suited than switches. The present plans are that most of the assigned frequencies will be stored in PROMs, but for flexibility a limited number of thumbwheel switches to input a few additional frequencies will also be provided.

The normal state of all adaptive radios is the LISTEN mode shown in Figure 3. In this mode the receiver continuously cycles through all N assigned channels in LT seconds. (See Table 1 for a summary of the waveform parameters.) Within a given cycle, a 2(NC X TC)-second dwell

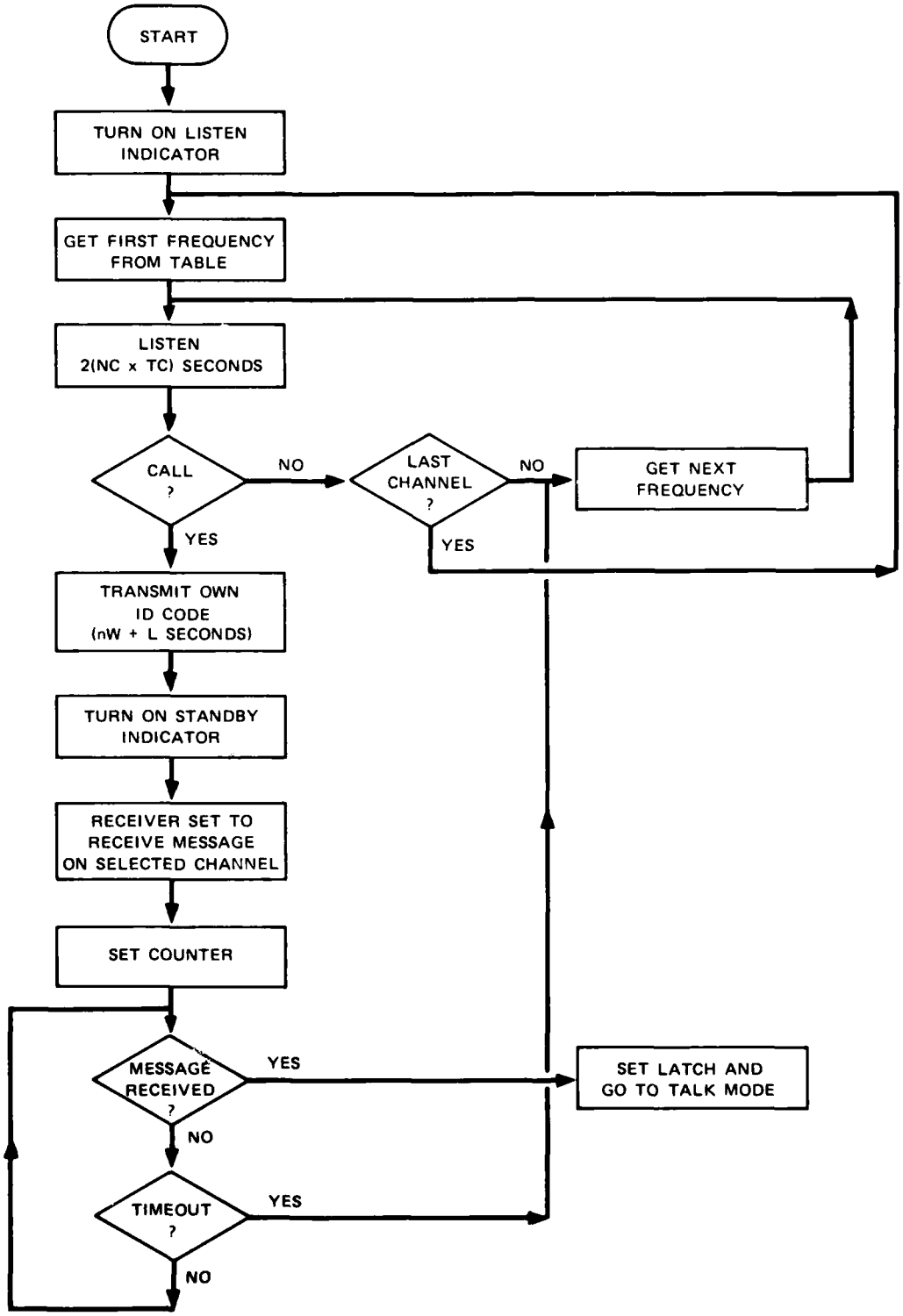

FIGURE 3 FLOWCHART FOR LISTEN MODE

Table 1

SUMMARY OF PARAMETERS USED IN WAVEFORM DESCRIPTION

Symbol	Description	Typical Value
A	Answer--time spent in LISTEN mode responding to call. A = nW + L	1.37 s
L	Time allotted to listen for a response to a call. L = W + PD	245 ms
LT	Time required for a complete cycle through N assigned channels in the LISTEN mode.	970 ms
n	Number of ID groups transmitted on each channel.	5
N	Number of assigned channels	30
NC	Number of chips used in spreading code.	13
nW	Time to transmit n,2-character ID groups at a given frequency.	1.125 s
PD	Maximum two-way propagation delay.	20 ms
TB	Bit length, TB = NC x TC.	8.67 ms
TC	Chip length.	0.667 ms
TD	Receiver dwell time in LISTEN mode.	2TB
TT	Total time spent on a given channel by Interrogator.	2.39 s
SBY	Standby time, LISTEN mode.	*
TN_R	Receiver tuning time.	15 ms
TN_T	Transmitter tuning time.	1.0 s
W	Time required to transmit a two-character ID group, W = (8 + 2 x9)TB for nine-bit character	225 ms

*To be determined.

is spent on each assigned frequency listening for a call. If a proper PSK element is received and decoded during this time, the cycle is interrupted and the receiver will proceed to decode the ID for comparison with its own code. If a match is not found, the LISTEN cycle is restarted at the next assigned frequency. If the proper call is decoded, however, the receiver immediately responds on the same frequency by transmitting its own ID for nW + L seconds. The receiver then reverts to a STANDBY mode in anticipation of a response.

As shown in Figure 4, the radio is activated by entering a two-character ID of the station desired, and pressing CALL. For example, station AB wants to communicate with station CD. Starting at the highest assigned frequency not in use, station AB sends CD repetitively n times for a total of nW seconds. At the end of this time the calling station AB, its receiver preset to CD, spends L seconds listening for a response. If none is received, the transmitted sequence is repeated at the next lower frequency, and so on; the sequence is repeated until all assigned channels are exhausted or until a response is obtained.

If a response is obtained by the reception of an echo (reception of the same ID sent), a READY state will be indicated and the system reverts to a conventional transceiver.

The method of determining channel availability depends on the hierarchy of potential users of the channels in question. If users are restricted to only those belonging to a particular network, the presence of a user in a given channel can easily be determined at the output of the Costas Loop, for example, because his type of transmission will be known. If, however, the caller must determine the presence of any interference, friendly or unfriendly, the technique will be significantly different from the former case. Although the question of channel availability is important in an operational system, it is not addressed in this preliminary study because it does not bear directly on the feasibility of the signaling techniques used in the adaptive radio.

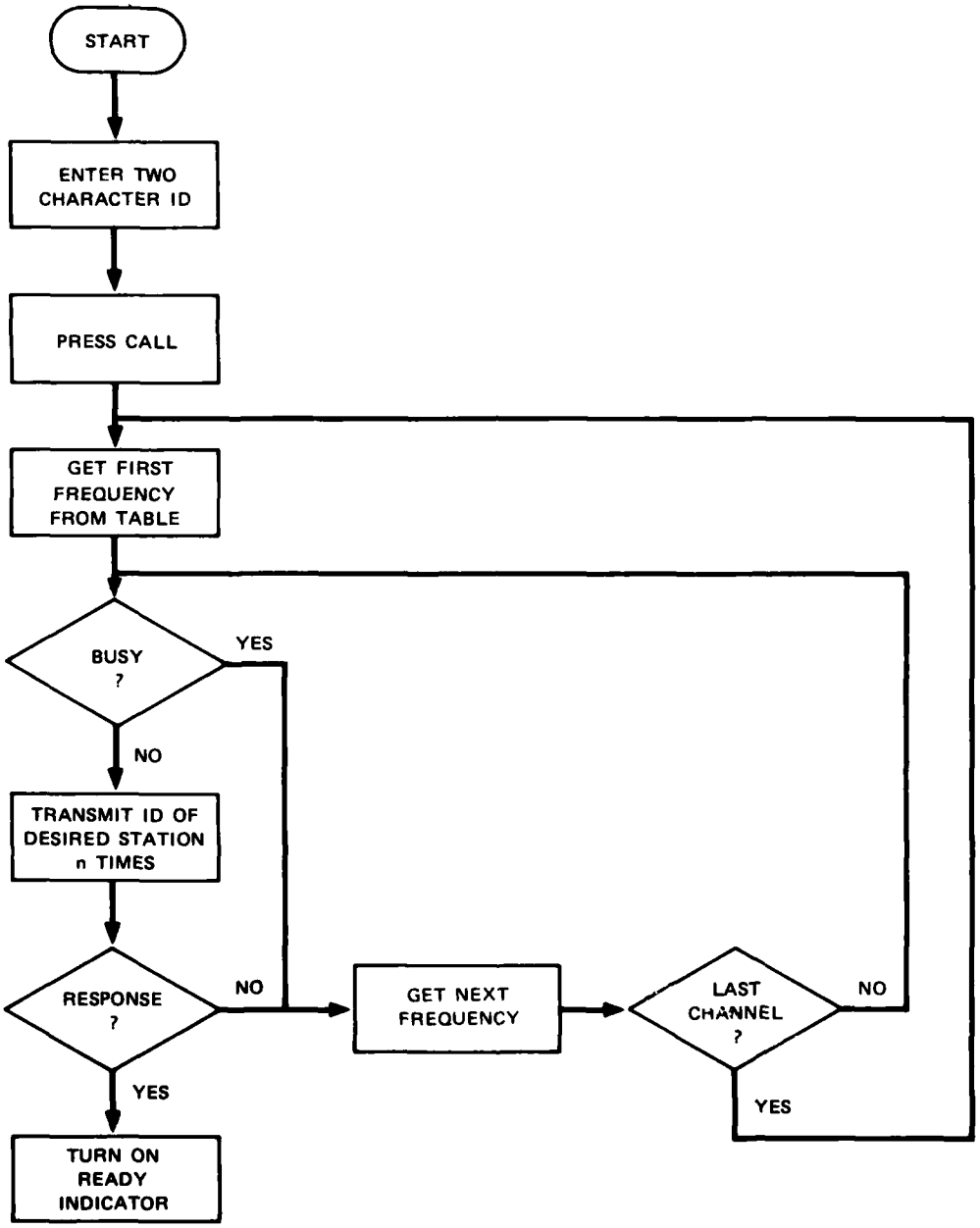

FIGURE 4 FLOWCHART FOR CALL MODE

4.3 Waveform Format

The basic signaling element, or bit, of duration TB is shown in Figure 2(a). Each bit consists of a 13-chip Barker code or its complement. (To avoid possible confusion, the term chip is used to identify the basic components of the direct-sequence spreading modulation, whereas bit is used to distinguish the components of the data, or information bearing modulation.) Because each chip has a duration of TC seconds, and there are NC chips per bit,

$$TB = NC \times TC \text{ seconds} \tag{2}$$

are required to transmit one bit of information. For a channel having 3-kHz bandwidth, the chip duration, TC, would be 0.667 ms, which gives a 13-chip bit a duration, TB, of 8.667 ms. In the example of Figure 2(b) the ith bit represents a zero and its complement, the $i + 1^{th}$ bit, denotes a one.

A six-bit ASCII code is used to represent any one of 36 possible letters or numerals, and three additional bits are used for start, stop, and parity. A total of nine bits must, therefore, be sent for each character desired. In addition to the basic two-character identifier, an eight-bit preamble of all mark bits is appended to the start of the ID string as shown in Figure 2(c). The preamble provides a well defined high "idle state," which, when combined with the start bit (always low), gives a high-to-low transition that establishes synchronization of the UART clock with the data stream. Subsequent data bits, parity bit, and stop bit are decoded and put out as a complete 6-bit word. Thus, with a 2-character ID, $8 + (2 \times 9) = 26$ bits constitute a complete ID group of duration W. For a 3-kHz channel, $W = 26TB = 225.4$ ms.

In Figure 2(d) each two-character ID group plus preamble is represented as a separate block of duration W, with n blocks transmitted at each frequency. (n is determined by the receiver timing, described below.) The start of each transmission cycle is preceded by TN_T, the time required for transmitter and antenna coupler tuning, plus 2TB to check

for channel availability. During each CALL cycle, L seconds are spent listening for a response. This time consists of the maximum two-way propagation delay between transmitter and receiver, approximately 20 ms for a 3000-km path, plus W, which is the time required to receive and decode a two-character ID for a total of approximately 245 ms. The interrogator will conclude that contact is made if an echo to his transmission is received during the L time interval. If contact has been made, transmission of the ID group ceases and the interrogator can start the message traffic.

The timing of the LISTEN mode is shown in Figure 5. Because a bit occupies a time span of TB = NC x TC seconds, the receiver must pause in each channel for at least this amount of time to decide if a bit has been received. Because receiver and transmitter are not synchronized, a dwell time of 2TB seconds is allotted to each channel. The excess time is needed in case the beginning of the dwell occurs in the middle of a bit. TN_R seconds are provided for the receiver to tune to each of n channels. The resulting total time for a receiver to complete a scan is

$$LT = N[2(NC \times TC) + TN_R] \quad . \tag{3}$$

The transmitter must remain on a channel long enough for a receiver to cycle through all the channels (LT seconds). An additional 2TB seconds are added to ensure complete overlap of a bit. The number of ID groups to be transmitted on each channel is then given by n where

$$nW \geq LT + 2TB \quad . \tag{4}$$

If a bit is received, the Barker decoder sends a full-amplitude impulse to the detection logic, which interrupts the LISTEN cycle shown in Figure 5(a) so that the ID group can be decoded. If a preamble, consisting of eight consecutive marks (which may appear as either all zeros or all ones because of the phase ambiguity), is not detected in W seconds (the duration of an ID group), the LISTEN cycle is resumed at the next frequency. If a preamble is detected, thus providing a "mark" reference

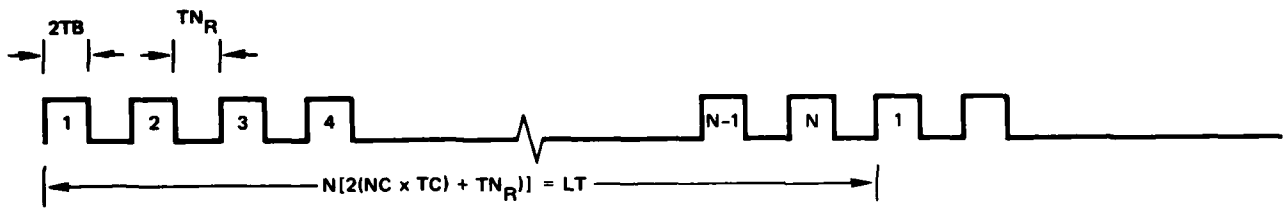

(a) FORMAT OF RECEIVER OPERATION IN LISTEN MODE FOR EACH OF n ASSIGNED CHANNELS

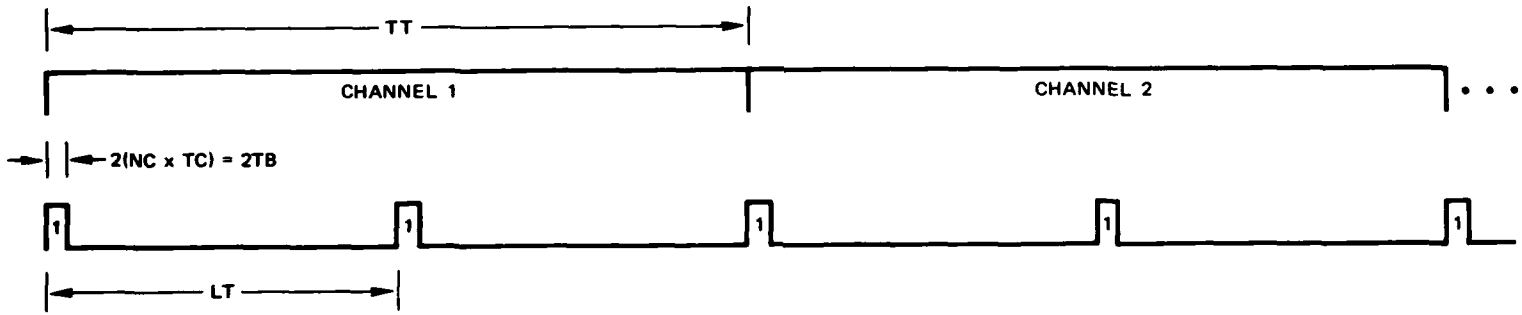

(b) REPEATED RECEIVE DWELL IN CHANNEL NUMBER 1

FIGURE 5 FORMAT OF LISTEN MODE

and a start time, the data following are decoded and compared with the station's own ID code. When a station decodes its own ID, it immediately sends its own ID repetitively for A seconds (A = nW + L). The station then switches to STANDBY in anticipation of message traffic. The station remains in the STANDBY mode for SBY seconds. If no other stimulus is received in that time, this lack of stimulus indicates that the "hand-shaking" between interrogator and responder was not successful, and the station reverts back to the LISTEN mode.

As an example of practical timing for the signaling waveforms we note that TN_R, the maximum remote tuning time for the receivers that are being considered, is typically 15 ms or less. If there are N = 30 assigned channels, evaluating Eq. (3) shows that the receiver will complete a cycle in LT = 0.97 s. Equation (4) requires that nW be at least 0.987 s, and since W = 0.225 s, n must be at least 4.4, or 5 complete ID groups must be sent on each channel. The actual value for nW is then 1.125 s. The total time spent by the interrogator in one channel, TT, is then

$$\begin{aligned} TT &= nW + L + TN_T + 2TB \\ &= 5(0.225) + 0.245 + 1.0 + 0.017 \\ &= 2.39 \text{ s} \quad . \end{aligned} \tag{5}$$

In evaluating Eq. (5) we have assumed the 1-s tuning time, TN_T, of the model 728. The ARC-190, with a 35-ms tuning time, would allow a one-channel transmission time, TT, of 1.422 s. The time for the interrogator to cycle through 30 channels will, therefore, vary from 43 s to 72 s depending on transmitter tuning time. An average link-up should be accomplished in less than one such cycle.

4.4 Synchronization

Efficient demodulation of the modulated carrier, compression of the spread-spectrum signal, and the extraction of the information from the despread signal require synchronization of the demodulator, spectrum compressor, and symbol decoder with the received signal. Synchronization

requirements are the direct results of time and phase uncertainties. Even perfect equipment timing will not completely eliminate the need for synchronization, because range uncertainties and Doppler shift caused by changes in the propagation path or platform motion can be sufficiently large to cause problems. An HF sky-wave propagation path can introduce two-way group delays up to 20 ms over a 3000-km path and Doppler shifts of a few Hertz on a midlatitude path even when both stations are stationary. On auroral paths Doppler shifts of 10 to 20 Hz are not uncommon (Young, 1965). The motion of an airborne station with a 500-knot radial speed can induce up to ±43 Hz of Doppler at 50 MHz, and comparable frequency shifts can be expected from oscillator drifts using receivers with typical frequency stability of 1 part in 10^6. Because these frequency errors are small (on a percentage IF or percentage bandwidth basis) in comparison with phase errors produced by propagation delays, they can generally be neglected. Thus, received signals are assumed to have known frequencies, but unknown epoch and phase.

Because the operation of the adaptive HF-radio is intended to be self-adaptive, proper operation of the radio should not require setting a clock. That is, after an idle period, a suitable channel should be established within minutes after turning on the power switch and call initiation. The process of synchronization, channel selection, and other details should be transparent to the user.

Carrier synchronization can be achieved by means of a Costas loop or a squaring loop. Both methods use a phase-lock loop (PLL) to extract the carrier from the input signal and both methods have identical noise performance (Waggener, 1976). The Costas loop is described in Section 6.3 to illustrate the procedure. A final choice of the Costas loop over the squaring loop is not implied.

Code word synchronization is accomplished by means of the eight-bit preamble and the start and stop information encoded along with the data word. The technique is described in detail in Section 6.6.

Two different techniques, one analog and one a hybrid analog-digital approach, appear to be feasible to obtain synchronization with

the chip modulation. The analog method derives the clock rate directly from the chip modulation by means of a PLL that locks to the fundamental clock frequency. If long strings of marks or spaces are transmitted using nonreturn to zero (NRZ) coding the lack of data transitions will create timing problems. This can be avoided by using codes (e.g., Manchester code) that are rich in data transitions. Although timing can easily be extracted from these codes, the price paid is that a larger bandwidth is required for a given transmission rate.

For the adaptive radio the proposed use of a 13-chip Barker NRZ code avoids timing problems because the maximum run of marks or spaces is limited to five. Once lock is achieved proper sampling of the chip modulation can easily be derived from the chip rate. Because the carrier frequency is accurately known, and frequency changes caused by oscillator drift and Doppler shifts are not likely to exceed 0.02 percent of the 455-kHz IF, the maximum chip sampling error is negligible.

In the hybrid approach a peak (caused by a bit transition) detector is used to establish synchronization, and also to reset a clock, which is used whenever a string of marks or spaces prevents the occurrence of a peak in a TC time interval. The clock is chosen to provide a sample slightly in excess of a bit interval. Hence, if a peak is not found in the normal chip interval, the clock sample will be used.

The hybrid approach is described in greater detail in Section 6.4.3. Phase-lock loop design techniques are well established (Gardner, 1979; Waggener, 1976), but their performance relative to other chip synchronization techniques when used with the particular chip code planned for the adaptive radio needs to be further assessed (Duttweiler, 1976; Saltzberg, 1967).

4.5 Options for Improved Capabilities

Although the adaptive radio described in this report is intended for intermittent, short, two-way simplex exchanges, the design of the adaptive unit using spread-spectrum concepts with a linking protocol allows many options in a final system. For example:

- An increase in the transmission rate beyond the limitation imposed by multipath spread can be accomplished by using different codes for the spread modulation. This can probably best be done by including a separate parallel channel for each code.
- Provisions to ensure successful message reception can be implemented on a "packet" approach where the information to be transmitted is divided into packets and transmitted. The reception of each packet is verified and transmission is repeated if necessary. Additions to the adaptive unit to handle this type of message would include a buffer memory for the information and addition of suitable "handshaking" controls between the transmitter and receiver.
- Increased reliability can be achieved by the use of a longer chip sequence or through the use of error correcting codes. Both of these options, however, will reduce the data rate.
- Because the adaptive radio discussed in this report is intended to be used for very brief exchanges or for orderwire service, provision to reestablish link-up automatically in the event that contact is lost in the middle of an exchange is not provided. The usefulness of the radio especially in a dynamic environment, however, will be greatly enhanced by the addition of such a feature.

5 PROPAGATION EFFECTS

High-frequency radio communication over great distances is made possible by the existence of a number of ionized layers above the surface of the earth. The ion density of these layers at a given location varies with height and time. During the day, four solar-controlled layers generally exist: the D, E, F1, and F2 layers. These layers are found, respectively, at heights of roughly 50 to 90 km, 100 km, 200 km, and 300 km. At night, the D and E layers disappear, and the F1 and F2 layers merge into a single layer at about the height of the daytime F2 layer. Sometimes a thin, relatively dense layer of ionization called sporadic E (or E_s) is embedded in the normal E layer. This unpredictable and highly variable layer is not produced by solar radiation, but (at midlatitudes) is believed to be caused primarily by wind-shear compression of ions produced by meteor impact; metallic ions from meteor ablation are often present.

Radio waves incident on these layers are reflected back to the earth provided that the plasma frequency (a measure of electron density) of the layer, scaled by the secant of the incident angle, is greater than the radio frequency of the signal. The F2 layer has the greatest ionization density and hence is usually able to reflect the highest frequencies.

For typical daytime plasma frequencies in the 6- to 15-MHz range, corresponding to plasma densities of 0.5×10^{12} to 2.8×10^{12} el/m^3, radio signals as high as 60 MHz can be reflected if the signals are near grazing incidence. The common useful limit, however, is about 30 MHz at the high end and a few MHz at the extreme lower end. The limitation at the low end is caused by D-region absorption, the effect of which varies inversely as the square of the radio frequency.

Because of its height and density the F2 layer plays a dominant role in long-distance communication for frequencies in the 3- to 30-MHz HF band. One-hop modes, out to nearly 4000-km ground distance, are normally

supported by this layer for frequencies in the HF band up to some maximum frequency, called the MUF, for a given path. The E and F1 layers play a lesser role in HF communications, because they do not usually exist at night and because densities are lower. During the day the E layer is generally useful for one-hop path lengths up to about 2000 km, and by two hops to 4000 km, particularly in the temperate zones. Not infrequently, the MUF for paths up to 2000 km is determined by reflection from a sporadic-E layer.

Natural HF propagation between two points usually entails a variety of mode structures. Common modes found on HF paths are shown in Figure 6. The complexity of the various mode structures along with the normal temporal variations in layer densities suggests that propagation over any HF path is variable. The skywave ground range of primary interest for the adaptive radio system is about 100 to 3000 km; we assume for simplicity in the following discussion that propagation will normally be by one-hop or two-hop E (or E_s) and F modes. In the nuclear case, we will be concerned with possible alterations in these modes and with the potential creation of new, anomalous modes.

The existence of sufficient ionospheric densities to support propagation is a necessary, but not a sufficient condition for successful sky-wave communications. Even under normal conditions many factors impact on the quality of transmission. Conventional HF circuits are often limited by intersymbol interference or selective fading caused by multipath. Deleterious effects such as absorption or loss due to geometric spreading, can, in principle, by compensated for by increasing the transmitted power, or by using a higher-gain antenna. Multipath effects require a different remedy.

Generally, diversity techniques, such as space, frequency, or time, are used in combating selective fading. Space diversity depends on the independence of fading between signals received at two locations separated by several wavelengths. Thus, if separated antennas are each provided with a separate receiver, and the outputs are combined such that only the strongest signal is used, the error rate can be reduced

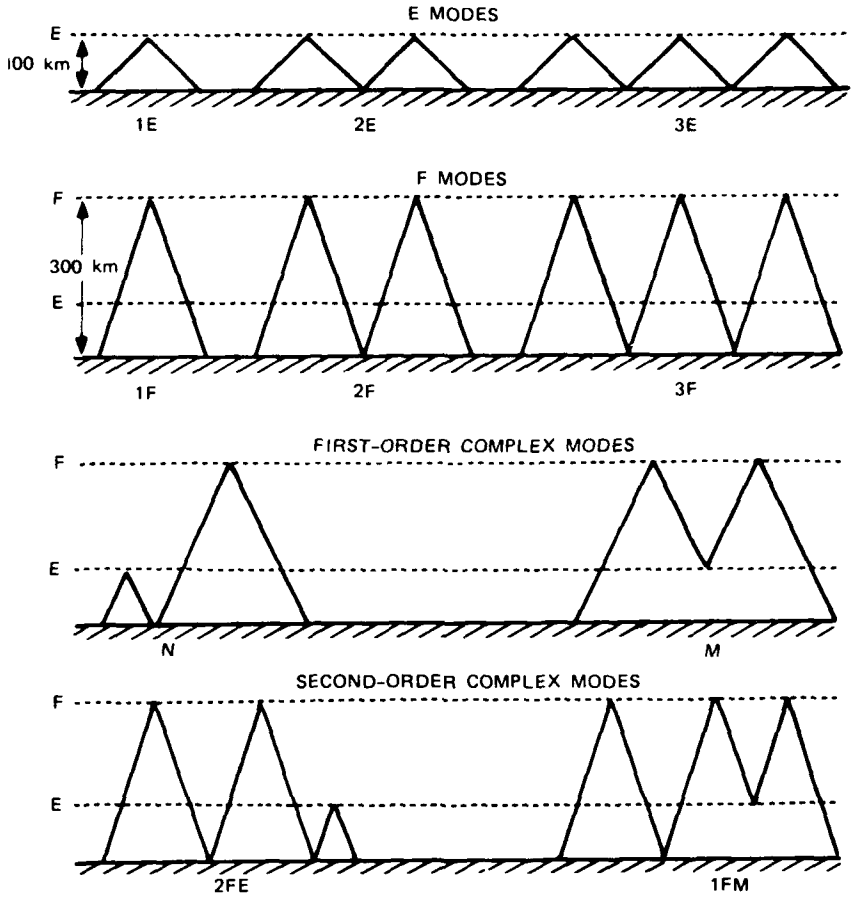

FIGURE 6 MODE GEOMETRY

significantly. Frequency diversity, polarization diversity, and time diversity produce similar benefits.

Diversity, however, generally requires redundant hardware, and in the case of space diversity requires sufficient land for the placement of two or more antennas. Frequency diversity requires two or more channels and has an impact on spectrum utilization. In addition, the hardware from transmitter down to the receiver is doubled.

Intersymbol effects in HF communications are traditionally handled by frequency selection and by reduction of the data transmission rate.

At a given range, operation near, but slightly below the MUF will generally maximize the data transmission rate by reducing the multipath spread as compared with operation at other frequencies. At that frequency, the useful transmission rate generally decreases rapidly with decreasing transmission range and slowly with increasing transmission range. With proper choice of frequency, the most favorable transmission ranges lie between a few hundred and a few thousand kilometers. At these ranges transmission at 300 baud is generally possible under normal conditions; at 200 km the maximum practical speed is reduced to about 125 baud.

Adaptation of frequency and transmission rate is an attempt to resolve the multipath problem. If, however, it is recognized that the presence of multipath is itself a form of diversity, in which information flows from the transmitter to receiver by independent paths, the multipath signals can be used to improve system performance. This concept is exploited in the adaptive radio by transmitting a signal that uses all of the 3-kHz bandwidth available to minimize selective fading by resolving the multipath signals. Multiple signals are then used in a decision-making process that assumes that successive signals in the data-bit stream experience similar multipath effects.

5.1 Multipath Effects

Generally, a radio signal travels from transmitter to receiver by several separate paths. Because of different path lengths the arrival of the signal at the receiver can cause several deleterious effects. If the signals are unresolved, that is, the signal bandwidth is less than the reciprocal of the differential path delay, the arrival of radio signals at the receiver can cause variations in the received signal strength. If, however, the signal bandwidth is such that the signals are resolved, multipath effects are observed as multiple echoes.

Signal variations due to multipath effects are termed selective fading. Selective fading results from constructive or destructive interference between delayed versions of the same signal arriving at the

receiver. Extreme fading can cause the received signal strength to fall below the receiver threshold; the channel is, then, inoperative.

The effects of multipath can better be appreciated by referring to Figure 7(a) which shows a typical winter's day oblique ionogram taken over a 1566-km midlatitude path. The ionogram shows that up to four different paths were supported by the ionosphere between about 8 and 11 MHz. Around 17 MHz, three paths, the E, F, and 2-hop F, were supported. At 23 MHz, propagation via the high- and low-angle 1-hop F can be seen.

An A-scope representation of signals received over the three paths at 17 MHz is given in Figure 7(b). All three paths were resolved by the 35-μs pulse used. In this example the multipath spread is 1.2 ms; therefore, the medium would support a digital data stream transmitted at up to 833 baud (1/1.2 ms), without intersymbol interference. At higher transmission rates (when TB, the intersymbol period, is less than 1.2 ms), the energy associated with one symbol will still be arriving at the receiver by the longer path, while energy associated with the next symbol begins to arrive via the shorter path. This overlap of adjacent symbols is termed intersymbol interference, and affects the reliability with which symbol decisions can be made. Therefore, single-channel digital transmission rates are commonly limited to a few hundred baud over HF paths that have millisecond spreads. The proposed system employs a bit time, TB, of 8.67 ms, or a transmission rate of 115 baud.

Conventional signaling techniques generally employ symbols of approximately 10-to-20- ms duration and generally not shorter than 3 ms. With these pulse lengths a multipath structure as shown in Figure 7 will not be resolved; instead, the received signal appears as a single peak with a time-varying amplitude. However, when pulses short enough to resolve the individual modes are transmitted, each mode will fade independently and slowly, which will provide the potential for a form of diversity reception for incorporation into the design and function of the adaptive radio. Note that even though short pulses, perhaps as short as 0.1 ms, will be used in the chip sequence to resolve the modes, the signaling rate is still constrained to less than a one-kHz rate by the need to avoid symbol overlap.

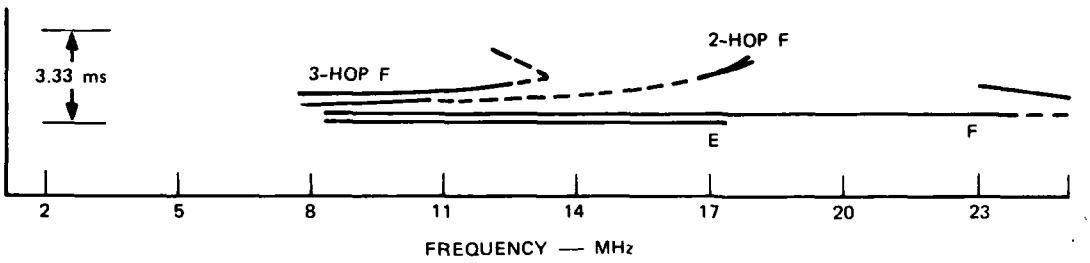

(a) TRACING OF A TYPICAL WINTER'S DAY IONOGRAM OVER A 1566-km MID-LATITUDE PATH

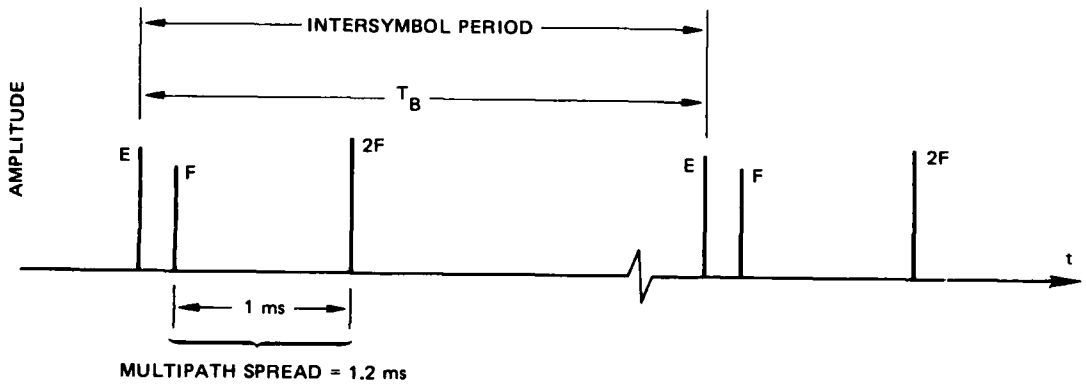

(b) A SCOPE PRESENTATION OF RECEIVED 17-MHz SIGNAL

FIGURE 7 IONOSPHERIC MULTIPATH PULSE DISTORTION

The amount of multipath spread is highly variable even in the ambient environment and depends upon such factors as path length, time of day, season, geographical location, and magnetic activity. Figure 8 (reproduced from Ames, Croft et al., unpublished, shows the differential time-delay distribution between three different east-west midlatitude paths. Median delays for these paths range from 0.7 to 1.7 ms; therefore, for paths of 1000 km or less, one- and two-hop signals generally are resolved with a 3-kHz bandwidth. However, for the longer 2000-km path, nearly half of them will be unresolved.

Figure 8 indicates that multipath spread from one- and two-hop signals normally does not exceed 3 ms. Over these channels, 333-baud transmission can be supported. When only a single mode exists, factors such as dispersion, the roughness of the ionosphere, and the antenna beamwidth,

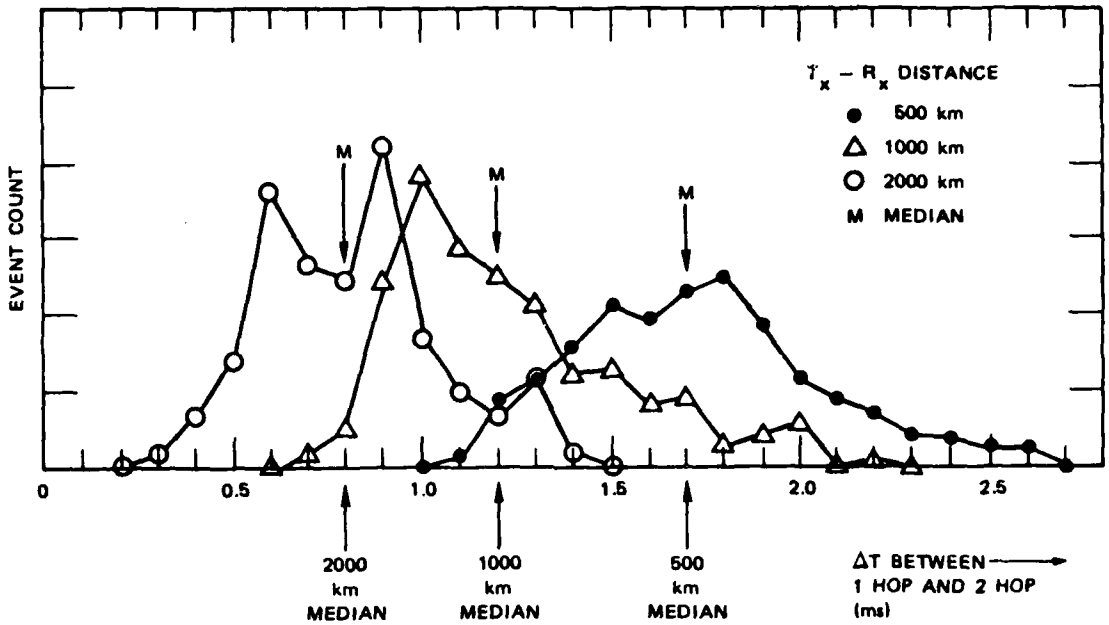

FIGURE 8 THE TIME-DELAY DISTRIBUTION BETWEEN ONE-HOP AND TWO-HOP SIGNALS FOR EAST-WEST PATHS OF 500, 1000, AND 2000 km ACROSS THE UNITED STATES

will still produce a multipath spread of a few tens of microseconds. For these reasons, the maximum transmission rate over an HF channel is generally limited to a few tens of kilohertz.

5.2 Nuclear Propagation Effects

In the past two or three decades means have been devised to modify and to alter the various layers of the ionosphere. Dramatic temporary changes in the structure of the various ionospheric layers can result from nuclear explosions that take place within, above, or below the ionosphere. Temporary layer changes can also be induced by radio-wave heating, and by the release of chemicals carried into the ionosphere by rockets. These changes can affect the performance of HF radio links for periods of minutes to many hours by changing signal strength, by altering the normal multipath structure of received signals, by introducing new off-path modes, or by altering the frequency stability of received signals.

In severe cases, massive signal absorption can result from large increases in D-region ionization levels; the useful band of propagating frequencies supported by ionospheric reflection can shift upward or downward in frequency and be altered in width.

The condition of the ionosphere several hours-to-days after a nuclear attack will fluctuate according to various attack scenarios. The long-term response of the atmosphere to a massive attack cannot be predicted accurately; the best that we can do is identify the potential effects based on nuclear-test experience with single weapons, then establish credible bounds for those ionospheric changes likely to persist more than a few hours.

The nuclear effects of greatest concern to an HF communicator are:

- Signal absorption in passing through the D region is drastically increased (initially by hundreds of dB in the case of high-altitude detonations) so that signal returns are weakened or obliterated. This absorption drives the system toward use of higher frequencies where absorption is less intense. Whether these frequencies will propagate depends on the condition of the E and F regions.
- F-region densities may be sharply reduced if the attack occurs at night and includes large-yield detonations at high altitude. The region of depleted ionization from a single burst, particularly in the altitude regime of 50 to 100 km, may extend 1000 to 1500 km from the burst. A similar reduction, though less extensive geographically, will probably follow the detonation of multimegaton surface detonations. The reduced ionization drives the system toward much lower frequencies than would normally be used (because higher frequencies penetrate the ionosphere and are lost to space). The duration of depletion-caused blackout should not exceed 8 or 10 hours at most (depending on the local time of attack) because the solar radiations will produce new ionization at sunrise (but with a consequent increase in absorption). For this reason, F-region depletion is not considered a major late-time source of degradation.
- The MUF for a given path may alternately be increased and then decreased (or vice versa) by a factor of three or more, as traveling waves initiated by the explosions travel around the world several times at acoustic velocities ranging from 300 to 500 m/s at ionospheric heights. Such changes may continue for days after a massive attack.

The ability to function in the presence of these oscillations is one of the major advantages of an adaptive system.

- Abnormal propagation modes (sometimes called "bomb" modes) may be created by high-altitude detonations. In this case, the signal scatters out of the great-circle plane when it encounters sharply bounded, field-aligned ionization irregularities. Such off-path modes have been observed at frequencies well into the lower VHF range. These modes are potentially useful for communications. However, their availability depends strongly on geometry, they are of limited utility at middle and high latitudes. Although such modes cannot be relied on in general and have quite limited range at Continental United States (CONUS) latitudes, (around 1000 km in the east-west direction and 300 km northward) an adaptive radio is capable of using them whenever they are available. After several hours, however, the burst-produced ionization will probably have decayed or dispersed; and normal modes will again be dominant. However, the "normal" modes are likely to be distorted severely by tilted, time-varying refracting layers, and the presence of small-scale irregularities that cause a diffuse multipath known as spread F.
- Sporadic-E layers are likely to be produced by both high-altitude explosions and a massive surface assault. These layers will likely be more intense and widespread than normal, drifting with high-altitude winds and continually changing in character between strongly reflecting mirror-like surfaces (which are useful to communications) and partially transparent dispersive patches of ionization (which are likely to degrade communications by reducing the strength of signals refracted in the higher F layer).
- Transmitted waveforms will be distorted by off-path reflections, diffuse multipath (spread F), and Doppler effects. The severity and manageability of this degradation depends strongly on the waveform and signal processing techniques.
- Electromagnetic pulse (EMP) effects on receiver front-ends are important to a final system design, but are not considered here.

The most important of the above effects for an adaptive HF system in the late-time environment are:

- Persistent absorption
- Traveling waves
- Sporadic E
- Multipath and Doppler effects.

5.2.1 Absorption

Nuclear absorption is a well-known and relatively well-understood phenomenon. Because it is the major cause of HF blackout at early times, most of the effort to predict HF communication effects has focused on absorption. Even so, its location and intensity cannot be predicted with any degree of confidence at late times.

The most sudden and spectacular HF blackout is caused by high-altitude detonations. Only a few of the U.S. surface tests caused significant blackout because the yields were generally not large enough for the debris to reach an altitude (20 km or more) from which gamma radiation could shine upward onto the D region. Consequently, the potential for prolonged absorption-induced blackout from multimegaton surface detonations is sometimes overlooked.

5.2.1.1 Absorption Produced by Multimegaton Surface Detonations

A massive attack against the missile fields, possibly entailing the use of hundreds of multimegaton weapons, is of very serious concern to any HF system. The vast quantity of radioactive debris is expected to rise to 30 km or more, producing intense D-region absorption over an area several hundred kilometers in extent. Outage will not occur for perhaps 5 min, because it does not start until the debris reaches an altitude of 20 km or so. From then on, the debris will spread and be carried by winds to other locations, forming swaths of intense D-region ionization across large sectors of CONUS, the location of which depends primarily on wind patterns.

Unless the debris concentrates into patches as it moves, even an adaptive HF system will be unable to penetrate the affected portion of the D region for many hours during the daytime, but some connectivity may be established after nightfall, depending on the total fission yield and the area over which it has spread. Nevertheless, assuming the multimegaton weapons are reserved for attacking the missile fields, links operating outside the swath should be usable in 30 min to an hour unless

they are in the late-time absorbing region created by high-altitude weapons. In many situations, messages can be relayed around absorption regions that do not cover a vast area. In addition, as the debris moves under the influence of winds, terminals that were previously unreachable may become a usable part of the the network. When this occurs, an adaptive system will be able to make contact immediately.

5.2.1.2 Absorption Produced by High-Altitude Detonations

Even a small-yield nuclear explosion at high altitude (above 70 km) will cause instantaneous HF blackout over a sizable area, approximately out to line of sight of the burst--a radius of several hundred to a few thousand kilometers. However, the duration of blackout produced by small-yield weapons is too brief to be of concern for the late-time system requirements considered here.

As the yield of the high-altitude detonations increases to a megaton or so, late-time absorption produced by radiations from the decaying radioactive debris can be very significant and can cause blackout for many hours, possibly even days in more limited regions. This late-time absorption is caused by beta particles emitted from debris at altitudes above about 65 km. Because the charged beta particles are constrained in their motion by the earth's magnetic field, late-time absorption from high-altitude detonations occurs only where the magnetic field lines passing through the debris intersect the D region (in both hemispheres), typically, an area of a few hundred kilometers in extent for each weapon and referred to as a "beta patch." This is of concern even to an adaptive system, but only a relatively small part of a network is likely to be blacked out after an hour or so if the number of large-yield high-altitude bursts is relatively small (for example, a dozen over CONUS).

5.2.2 Traveling Waves

Gross changes in F-region height and critical frequency have been observed after large-yield surface detonation and after high-altitude detonations of even 10 KT. The shock wave heats the atmosphere and sets

it in motion as it travels upward and outward from the explosion; the amplitude of the wave increases with altitude up to 200 or 300 km. As the shock wave slows to acoustic velocities, acoustic gravity waves (AGW) are generated that travel around the world in natural sound channels. The ionization is set in motion by collisional interaction with the neutral particles, but is constrained to move predominantly in the direction of the magnetic field. Consequently, the largest F-region fluctuations are observed in the (magnetic) north-south direction.

Our knowledge of nuclear-produced acoustic gravity waves comes primarily from the huge Soviet near-surface tests in October 1961 (Stoffregen, 1962), the multimegaton U.S. Housatonic explosion in the troposphere (Kanellakos, 1967), and the high-altitude tests in the Fishbowl series (Lomax and Nielson, 1968). In all these cases, large oscillations in F-region height and critical frequency, with consequent variations in MUF on many paths, were observed thousands of kilometers from the burst point.

Because these large F-region oscillations travel over such great distances and continue for many hours, their onset after a massive attack is likely to affect virtually all HF links, at least intermittently, for days. Conventional HF systems will have extreme difficulty operating at such times. The major advantage of an adaptive system is its ability to function almost continuously in the presence of these large variations in path MUF.

5.2.3 Sporadic E

Although E_s was one of the most prevalent phenomena observed after nuclear tests, in both low- and high-altitude vases, its potential for communications during the recovery period has not been widely recognized. Almost every nuclear test report mentions the presence of E_s, often at several different altitudes. Its onset was sometimes immediate and sometimes delayed by several hours. In small-yield, low-altitude events, it appeared in the burst locale as the tail of the shock wave that traveled upward through the E-region. After some of the high-altitude tests,

it appeared both locally and at great distances, often with exceptional intensity.

For example, after the TEAK event, dense E_s appeared simultaneously at five out of six widely spaced stations in North America (Thomas and Taylor, 1961). A similar widespread enhancement was noted after the ORANGE event. Operation Fishbowl reports also contain numerous mentions of E_s obscuration. On many occasions, E_s layers appeared hours later at distant locations in conjunction with passage of a traveling wave, generally with a short delay relative to the onset of the F-region disturbance.

The important point is that an adaptive system will be able to use E_s ionization whenever it is present. At times, it is a very efficient reflector of radio energy, often reflecting signals of higher frequency than the F region will support and sometimes extending the usable frequency to 50 MHz or more. Because the mechanism is reflection rather than refraction, dispersion is often minimal and the system may operate very effectively at ranges of about 1000 to 2500 km, depending on the height and intensity of the E_s ionization and on the operating frequency.

5.2.4 Multipath and Doppler

Estimation of the multipath and Doppler properties of a signal in a nuclear environment is extremely difficult in the general case, that is, on a global scale and at an arbitrary time in an unspecified attack scenario. The largest time-delay spreads of practical interest may well occur on long paths far removed from the region where the attack is concentrated. They may reach their maximum values some hours later when acoustic gravity waves generated by the explosions approach the path and alter the normal propagating modes. Similarly, the maximum Doppler spreads may be determined by the passage of these traveling disturbances or by magnetospheric perturbations induced by high-altitude detonations.

In general, the greatest extremes of multipath occur when signal energy deviates from the plane of incidence, with the direct ray reaching the receiver before the off-great-circle mode. For the relatively low-power systems considered here, we assume that off-path signals of

significant strength are limited to those that are reflected (or refracted) within half the maximum one-hop range in the transverse direction. Thus, the maximum distance to the off-path reflection point is about 2000 km, and the maximum off-path time delay is on the order of 13 ms (4000 km divided by the speed of light). The corresponding time delay of the direct signal depends on the path length, varying from about 4 ms for a 1200-km path, to 10 ms for a 3000-km path. The maximum relative time delay is, therefore, about 9 ms for a 1200-km path and 3 ms for a 3000-km path. Allowing for possible differences in reflection heights, we arrive at an upper bound of about 10-ms differential time delay in the worst case. (One hundred baud would be the maximum possible transmission rate in this environment, but in practice only somewhat lower rates could be supported because of the effect of fading.)

To a first approximation, the Doppler shift of the refracted signal is equal to the component of wave velocity in the ray direction, divided by the wavelength of the signal. Because the traveling wave may be initiated by detonations anywhere within CONUS (or elsewhere), we assume that the ray and wave directions are parallel, to obtain an upper bound on the Doppler. For example, in the case of the shock wave, the maximum Doppler at 50 MHz is ±500 Hz, which is comparable to Doppler spectra measured in the diffuse aurora with a 50-MHz backscatter radar. The corresponding value for the AGW is around ±85 Hz. The latter value (±85 Hz) is considered an upper bound for the period considered here.

After some of the high-altitude nuclear tests at Johnston Island, vertical incidence ionograms recorded more than 1000 km from the explosion revealed extreme spread-F conditions that persisted until daylight. The echoes were weak and rapidly changing in frequency and virtual height. In contrast to the range spreading commonly observed at low latitudes, the spread F resembled that which is often observed at high latitudes, where the diffuseness makes it difficult to read the critical frequency and estimate path MUFs.

Such spread-F conditions are likely to cause rapid flutter fading for a communication system. Natural auroral disturbances accompanied

by this type of spread F often cause fading rates of 10 to 100 Hz, which, for example, can severely degrade voice circuits. Because similar conditions may prevail in a late-time nuclear environment even at midlatitudes, the waveform selected should be robust enough to accommodate them. Because of the present gross uncertainties in transforming vertical-incidence spread-F ionograms to system-performance predictions, extensive system tests under appropriate, known, auroral conditions appear to be the only means of ensuring adequate adaptability for the nuclear case.

5.3 Miscellaneous Propagation Effects

In the presence of the persistent ionospheric disturbances following a massive nuclear attack, the low-cost adaptive system described in this report is expected to perform qualitatively as follows:

- There are likely to be regions of intense absorption, of relatively limited geographic extent (a few hundred kilometers across), through which the system will not be able to communicate via sky-wave for many hours. However, relaying around these regions will often be possible, and motion of the debris away from the desired path will enable contact to be made earlier than by conventional means.
- Line-of-sight and ground-wave propagation is expected to improve significantly during periods of widespread absorption because the propagated atmospheric noise may be reduced, often by 30 dB or more at the lower frequencies. The use of low-noise receivers, hardened to EMP, may, therefore, maximize the range of ground-wave propagation when sky-wave signals are obliterated by absorption.
- The system will perform admirably for transmission of short messages in the presence of large quasiperiodic oscillations in F-region height and critical frequency, probably the most prolonged and far-reaching source of degradation for conventional HF systems.
- The rapid linkup ability of the adaptive radio enables the system to utilize E_s (and other transient modes of opportunity) to maximum advantage. In cases of F-region depletion, E_s propagation to ranges of 1500 to 2200 km may prove valuable.
- Although the PSK modulation waveform tentatively selected is quite robust, final selection should be based on the results of actual tests on transauroral paths during periods of severe spread-F conditions.

6 DETAIL BLOCK DIAGRAM OF THE ADAPTIVE HF RADIO

The major components in the adaptive HF radio and an outline of the details necessary to construct and evaluate the radio are described in this section. Although the choice of a particular technique or design is generally not unique, many functions are interrelated and hence follow from the choice of other components or signals. The criteria followed in the design of the adaptive radio were based on cost, flexibility, and ability to function under realistic conditions. An important component in this regard is the interface of a microprocessor with the system. This choice provides flexibility, but leads invariably to digital signals within the radio and the associated components necessary to support the microprocessor.

Although the methods and design of specific functions in this section are expected to lead to a workable radio, they are not necessarily optimized in terms of cost and technical approach. For example, although it may be desirable to implement all functions external to the receiver/transmitter digitally, such a decision can only be made after detailed analysis of all components and functions in a total system. Particular attention must be paid to the throughput of the digital system (equivalent to bandwidth in the analog world), and the speed of the microprocessor when used for real-time signal processing. Although analog circuits can always be used whenever the microprocessor is throughput limited, often a change in algorithm, or a specifically designed digital circuit will suffice. The general guideline of "digital is better" applies to the design of the adaptive HF radio, because stability, flexibility, and cost generally favor the digital approach over the analog. The choice of any one method invariably will include a performance and a cost trade-off (measured in terms of hardware cost and design time) between a number of otherwise acceptable alternatives.

6.1 Functions of the Microprocessor Controller

Operation of the radio is extremely simple. The radio is normally on and in the LISTEN mode. The LISTEN light is on and the receiver cycles through all assigned channels. A successful linkup turns on the TALK light, indicates the selected frequency and channel, and possibly provides an audio indication. The station operator can then respond to the caller. To establish contact with a station its ID is entered and the CALL button depressed. If linkup is established, the READY light is lit and the caller can start the message traffic.

The functions outlined here are intended to provide an overview of the adaptive radio operation. Specific details on the construction of the controller, choice of microprocessor, digital hardware, and other interfacing components will depend on the choice of the transceiver and other components. These choices in turn depend on the application of the system.

6.2 Modulator

Modulation of the RF carrier will be accomplished by a digital code sequence. Such systems are called "direct sequence" modulated systems. Two other types of general modulation, frequency hopping and chirp modulation, are in common use. They, however, are not suitable for the low-cost adaptive HF radio for the following reasons: First, frequency hopping depends on the nearly simultaneous use of several channels distributed in frequency space. This dependency requires that all terminals be closely synchronized, and sophisticated coding be provided to accommodate nonpropagating or busy channels. Second, although a chirp modulation is highly desirable because of its optimum S/N properties and its self-synchronizing feature (the chip synchronizer would not be needed), the many millisecond-long delay times required for the adaptive radio cannot be achieved easily with current technology. [IMCOM devices, which are imbedded or bulk-wave cousins of surface acoustic wave (SAW) devices, or reflecting array compressors (RAC), have the longest delays, but they are less than 1 ms.]

The modulation technique used for the HF radio is illustrated in Figure 9. A data source originating from the microprocessor controller produces binary ASCII characters at a rate of RB bits/s (RB = 1/TB). This data stream, Waveform B, which contains the information to be conveyed, is modulo-two added to a second sequence generated by the chip generator. The latter sequence, Waveform A, occurs at a rate of RC chips/s (RC = 1/TC) and is used to spread the spectrum beyond that needed for the transmission of the information. The resulting sequence, Waveform C, is then input to a biphase modulator to convert the base-band sequence into a form, Waveform D, suitable for transmission over the radio channel.

As shown in Figure 9, data and chip sequences are synchronized. Although this is not a requirement for successful operation, it is convenient. Because the chip generator and the data source can easily be synchronized by means of a common clock, this synchronization is done to facilitate future changes and also to aid in synchronization of receiver and transmitter.

6.3 Demodulator

Optimum performance is obtained with coherent demodulation of the received PSK signal. A suitable demodulator that derives a reference carrier that is phase coherent with the PSK-modulated carrier is shown in Figure 10. This device, called a Costas loop (Costas, 1956), operates as follows: The input signal, $\pm A \cos(\omega t + \phi)$, is multiplied by two signals from a local voltage-controlled oscillator (VCO) in phase quadrature to each other. The output signals from the I and Q multipliers consist of two frequency components: one (a function only of ϕ) slowly varying and related to the PSK modulation and the other (a function of $2\omega t + \phi$) at twice the carrier frequency. Only the low frequency components are retained upon low-pass filtering and this signal from the I multiplier is the desired binary PSK data, $\pm A/2$, scaled by $\cos \phi$. This latter term results from any phase error between the input signal and the VCO.

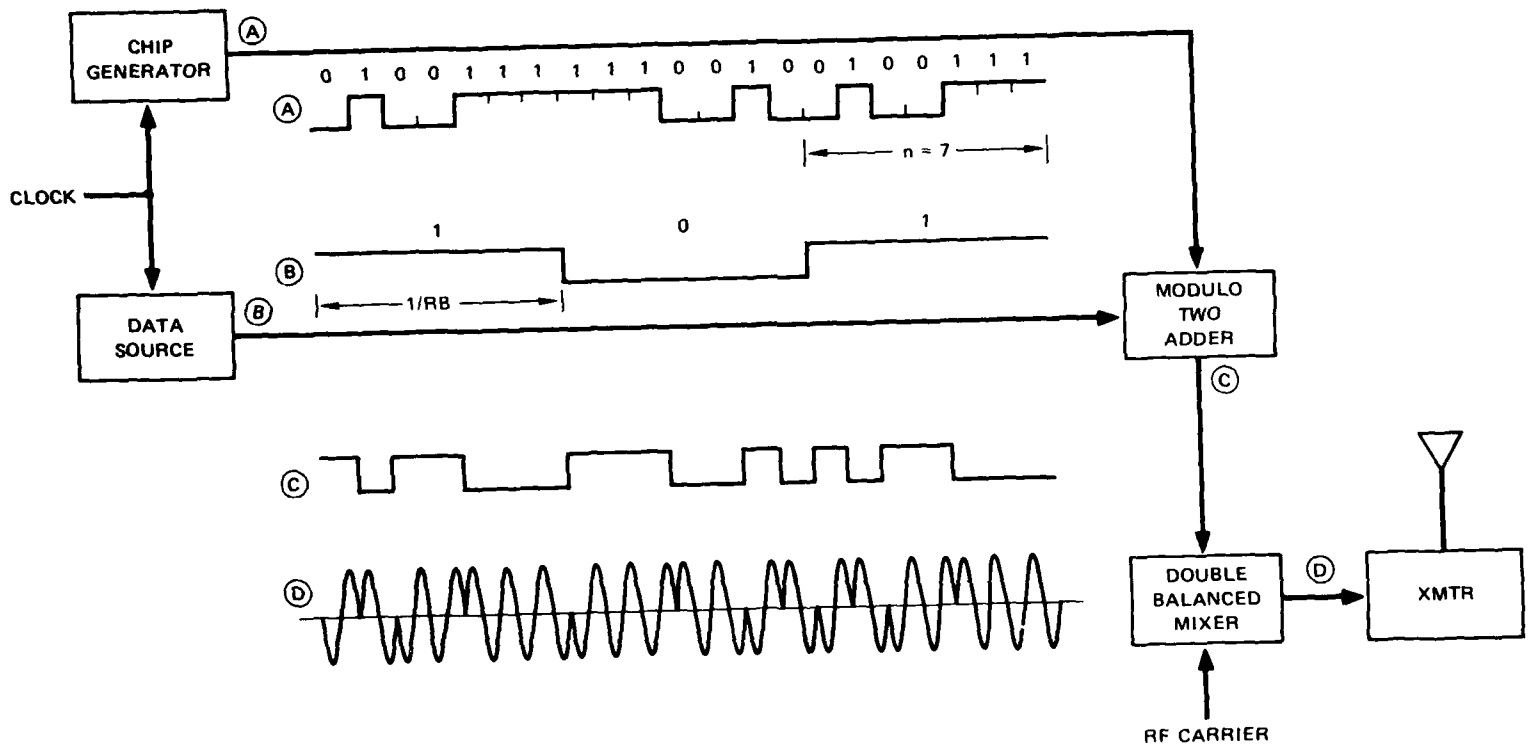

FIGURE 9 SPREAD-SPECTRUM MODULATION

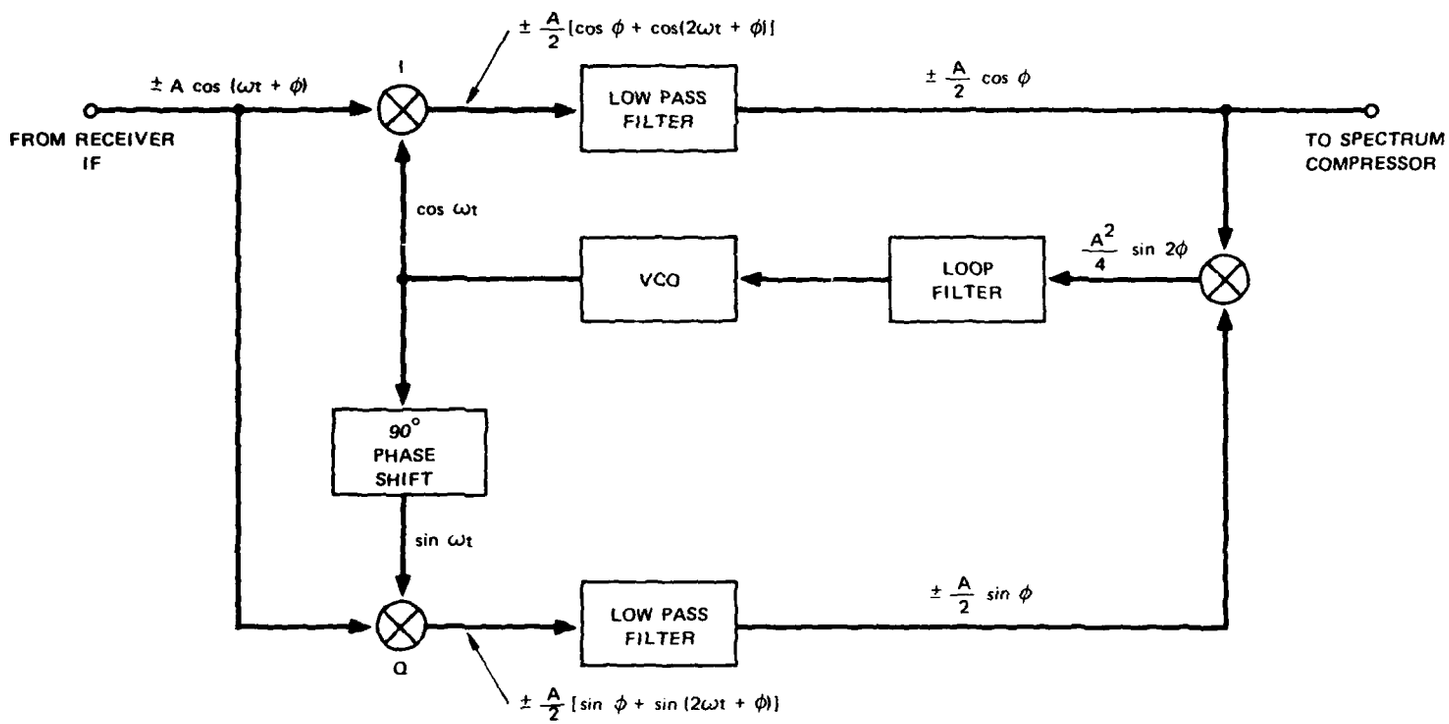

FIGURE 10 SYNCHRONOUS DEMODULATOR

Control of the VCO is derived from the output of the loop filter, which should have a narrow bandwidth relative to the chip rate in order that the loop error signal be independent of the data pattern (Waggener, 1976). When the loop is in lock, ϕ approaches 0° or 180°, and the carrier of the incoming signal and the VCO are either exactly in phase or out of phase. If the VCO drifts from its proper value by a few degrees, or if the carrier phase change by a few degrees because of changes in the phase path, the I audio channel will remain virtually unchanged, but the Q channel will show a progressively larger nonzero output. Because the polarity of the Q channel depends on the relative phase error through the $\sin \phi$ term, this information, upon multiplication of the I and Q audio signals, can be used to correct for any phase error between the VCO and the input.

Acquisition time required for the PLL to achieve lock depends on the initial frequency and phase difference between the VCO and the input signal, as well as on the overall loop gain and bandwidth. For an input with "good" S/N and no frequency offset between the input signal and the VCO, the acquisition time is approximately inversely proportional to the loop bandwidth (Waggener, 1976). For example, the expected acquisition time would be either 13 or 130 cycles (28.6 or 286 μs for a 455-kHz IF) for a ten-percent or one-percent loop bandwidth, respectively. Although minimum acquisition time and PLL tracking accuracy have conflicting bandwidth requirements, both can be accommodated by using a dual bandwidth PLL. Here a relatively wide bandwidth is initially used to achieve rapid acquisition; upon lock, the bandwidth is automatically narrowed to satisfy the tracking requirements. An acquisition time of a few tens of microseconds appears to be reasonable for the Costas loop. Because this time is short in comparison with the chip duration of 667 μs, acquisition time of the demodulator is not considered to be a factor in overall system timing.

The virtue of the Costas demodulator is that it remains locked when the modulation shifts 180°, but this necessarily implies that it cannot determine the absolute phase of the input signal; therefore, the sign of

the detected PSK modulation is ambiguous. Differential encoding, where the symbol value is defined by the presence or absence of a phase change, is one practical way to resolve the $0,\pi$ phase ambiguity of a Costas demodulator. The use of a reference symbol is an alternative solution that avoids the slight degradation in performance caused by differential encoding, but at the expense of transmitting redundant information. The reference-symbol approach is employed because the preamble can also be used to aid in symbol synchronization and because the coherent PSK approach is slightly better than differential PSK, in terms of a lower error rate for a given S/N.

The reference consists of an eight-bit preamble of all marks. Because this particular sequence does not occur in the normal ASCII character set, the preamble can easily be recognized and used to resolve all subsequent marks and spaces. The phase ambiguity will be resolved not at the output of the Costas loop itself, but rather in the detection logic following the Barker decoder.

6.4 Spectrum Compressor (Barker Decoder)

6.4.1 Charge-Transfer Device

The development of large-scale integrated circuits has progressed to a point where Large-Scale Integration (LSI) devices can now perform many signal-processing chores normally done by expensive critically adjusted analog circuits, or by large digital computers. This development has made practical, in terms of economy and size, the implementation of many signal processing techniques that previously were not practical. One recently developed device, the Binary Analog Correlator (BAC), is capable of performing such complex mathematical operations as convolution and correlation on a time-sampled analog voltage input. The BAC-32, a device manufactured by RETICON, is a 32-stage tapped bucket-brigade delay line (BBD) that operates on the principle of transferring an analog signal charge from one stage to the next by means of a two-phase clock that turns alternate transistors on and off. Analog signals may be sampled at up to 10-MHz rates. Digital codes may be loaded independently of the

analog clock into a separate static shift register at a 1-MHz rate. In addition, outputs are provided so that additional devices may be cascaded to obtain bit patterns longer than 32-bits. Experience with these devices, however, has indicated that cascading loads the previous stage, thus degrading the output waveform. Hence, use of BBD devices for codes in excess of 32-bits must be viewed with caution.

Samples of each BBD stage are steered to one of two summation lines, depending on the position of switches controlled by the static shift register shown at the bottom of Figure 11. By varying the content of the shift register the BAC can perform various operations on the analog signal such as filtering, correlation, decoding, and chirp detection.

Application of the BAC as a Barker decoder can be seen in Figure 11. For example, a 7-bit Barker code is shown loaded in the shift register; the clock rate is assumed to be synchronized with the chip rate. The delay line characteristic of the BBD is modeled by the series of sample-and-hold (S/H) circuits shown as capacitors in the upper line in Figure 11. The signal is shifted down the line as follows: Sampling of the even stages occurs when the ϕ_2 switches are closed as shown. Correspondingly, the odd stages are sampled when the ϕ_1 switches are closed. As the result of the biphase clock waveforms shown at the top of Figure 11, each input sample is sequentially moved from one S/H to the adjacent one on each clock transition. Thus, for a particular input to reach the output of the third S/H, three clock transitions are required. The voltages shifted from one capacitor to the next down the line represent analog samples of the input at discrete times. There is no analog-to-digital conversion; therefore, there is infinite amplitude resolution, limited only by noise and device linearity.

The BAC has a dynamic range of 37 dB. This range is determined by such factors as imperfect charge transfer, capacitor leakage, noise, amplifier linearity, and balance. The receiver will have a soft AGC to limit the IF output to the dynamic range of the Costas demodulator. The Costas demodulator output may be limited further to prevent overloading the BAC. Because the transmitted information consists only of a binary

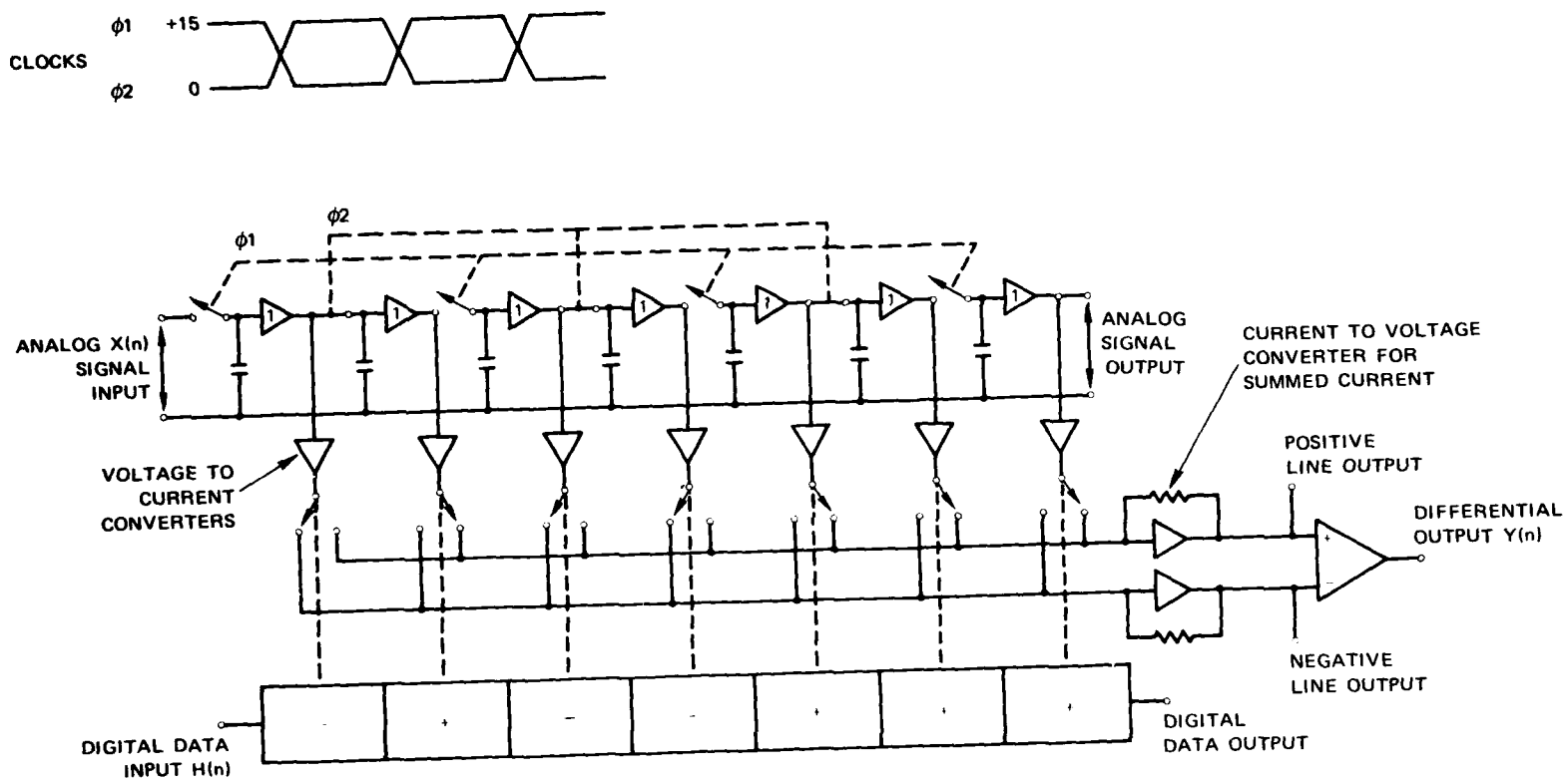

FIGURE 11 A SEVEN-STAGE BINARY ANALOG CORRELATOR USING SAMPLE-AND-HOLDS AND TAPPED-SWITCHES CONTROLLED BY A STATIC SHIFT REGISTER

phase shift, no information would be lost on compression or limiting of the signal alone prior to demodulation. If these operations are done before spectrum compression, however, some of the processing gain may not be realized. If the IF bandwidth contains interference stronger than the signal (an extreme case), AGC could be detrimental, and limiting might be preferred. Optimization of this process, that is, the type of limiter to use (Jones, 1963; Silber, 1966) as well as the placement of the limiter in the system, will be one of the objectives of a test program.

Multiplication of the analog signal stored in the various BBD stages with the binary pattern stored in the static shift register (SSR) is achieved through tap switches that are controlled by the contents of the SSR. When the static switch register controlling a particular switch contains a "-," the voltage of the corresponding BBD stage is connected to the negative line. Correspondingly, when the respective SSR stage contains a "+," the positive line receives the BBD sample. Thus, the differential output, Y(n) of the BAC, combines the outputs of each of the BAC stages after they are weighted by the binary contents of the SSR.

Operation of the BAC as a correlator can be expressed mathematically as

$$Y(k) = \sum_{n=0}^{N-1} H(n)\ X(k - n) \quad , \qquad (6)$$

where H(n) represents the binary contents of the shift register, Y(k) the correlation output at clock period, k, X(k - n) the analog input sequence, and N the length of the code (N = 7 in the figure).

The correlation can be better understood by referring to Figure 12 in which a 7-bit Barker sequence is correlated against a similar sequence loaded in the static shift register, H(n). Four clock periods, k = 0, 1,6 and 7 are shown. At k = 0 the first bit of the input sequence is in stage 0 of the BAC and the output of the correlator is Y(0) = -1. (For clarity we have neglected the effects of Stages 1 through 6, although in practice these stages will also contribute to the output.) After clock

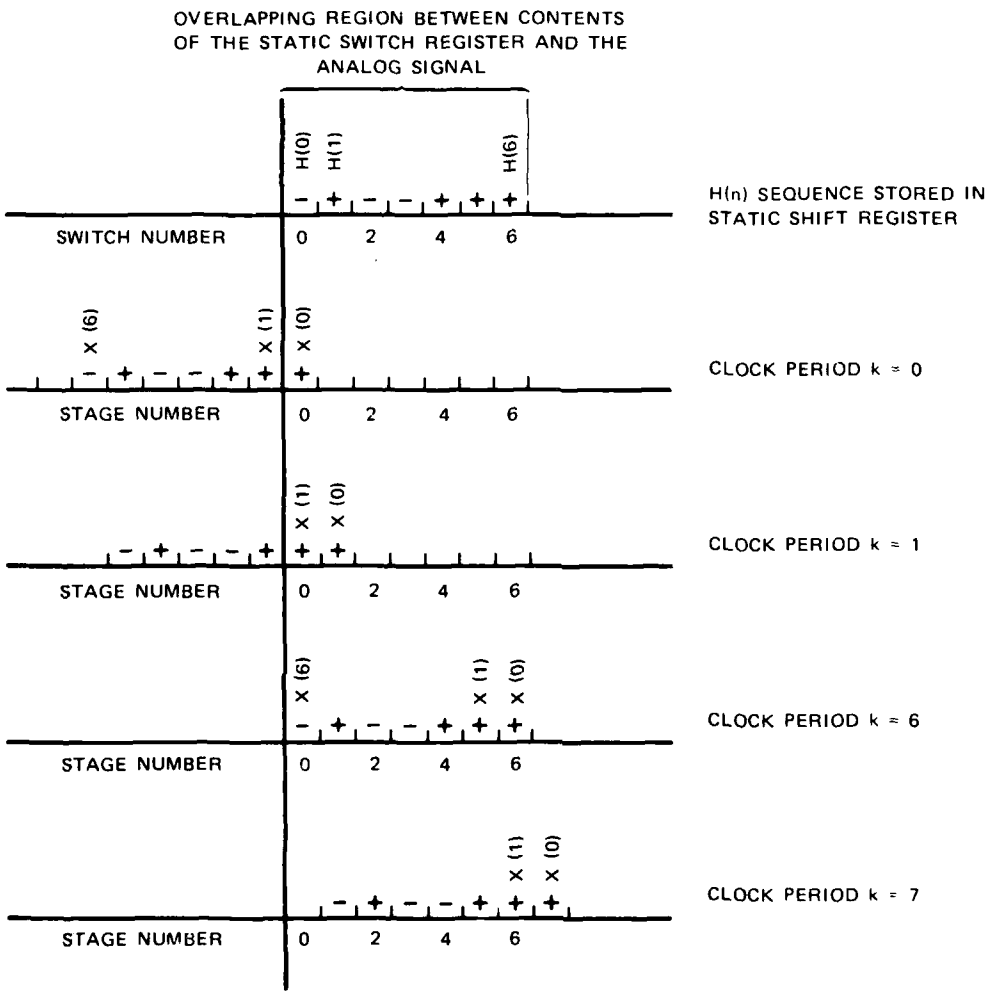

$$Y(k) = \sum_{N=0}^{N-1} H(n)\ X\ (k-n)$$

$k = 0 \qquad Y(0) = H(0)\ X\ (0) = -1$

$k = 1 \qquad Y(1) = H(0)\ X\ (1) + H(1)\ X\ (0) = 0$

$\vdots \qquad \vdots \qquad \vdots \qquad \vdots$

$k = 6 \qquad Y(6) = H(0)\ X\ (6) + H(1)\ X\ (5) + H(2)\ X\ (4)$

$+ H(3)\ X\ (3) + H(4)\ X\ (2)$

$+ H(5)\ X\ (1) + H(6)\ X\ (0) = +7$

FIGURE 12 CORRELATION ON A 7-BIT BARKER SEQUENCE

period, k = 6, the input sequence is completely loaded into the BAC and an output of Y(6) = 7, indicating perfect correlation, is obtained.

BAC devices have limited applications in conventional spread-spectrum systems because of their 10-MHz maximum sampling rate. For the adaptive radio, however, where the anticipated chip rate is expected to be well below 1 MHz, the BAC appears to be suited ideally for use as a correlator.

6.4.2 Analog-Digital Signal Processor

The recent development of single chip analog-digital signal processors by INTEL, AMI, and NEC opens a new dimension in signal processing. Although both the AMI and NEC devices (AMI S2811 and NEC uPD7720) appear to be more powerful than the INTEL device in terms of speed and capability, they both use mask-programmable ROMs. Because of the high cost associated with these ROMs and because of the preliminary nature of the literature available at the writing of this report, these devices are not considered further. However, for large volume applications, the AMI or NEC devices may be practical and should be further investigated when the data become available.

The INTEL 2920 is a self-contained signal processing system containing all necessary analog and digital circuits on a single LSI chip. Signals into and out of this device are analog, but internal operations are digital under control of a high-speed microprocessor appropriately connected to A/D and D/A converters as well as RAM and EPROM memory. Control of the device is done through a maximum of 192 instruction words stored in the EPROM. Hence a given algorithm can easily be implemented and later changed to accommodate modifications or design improvements. The device can be used as a single chip or a number of chips can be cascaded for more complex operations with no reduction in throughput. The exact throughput, or bandwidth, depends on the internal program length, but the minimum bandwidth is 4.3 kHz (13-kHz sample rate) if all 192 instructions are used. (At the writing of this report, the advertised 400-ns instruction cycle time has not been achieved in production and only 600-ns

versions were available. These, however, will still be adequate for our application.)

The 2920 has two basic types of instructions, analog and digital, which are combined in one instruction word. We estimate that a 13-bit Barker correlator will require from 30 to 40 instructions; therefore, the correlator can easily be accommodated by a single 2920 chip.

6.4.3 Chip Synchronization

Unlike dispersive filters, e.g., SAW devices, that continuously interact with the applied signal and, hence, are able to operate independently of its arrival time, the BAC is a sample-data device, its output is sensitive to proper synchronization of the samples with the chip interval. The need to synchronize can be appreciated by referring to Figure 13(a), which shows the baseband output of the Costas demodulator. Because bandwidth occupancy is small, comparable to twice the chip rate, the waveform is sine-like rather than rectangular. The SNR of the waveform shown is very high; therefore, the zero crossings and the maxima and minima are well defined. In general, when noise becomes a factor (SNR < 5 dB), the zero crossings become indistinct and maxima and minima do not always occur at the midpoint of the chip interval. For the waveform shown in Figure 13(a), for which samples are taken every TC seconds, they should ideally occur at the midpoint of the chip interval. Samples taken at the transitions will give erroneous results; samples taken between the midpoint and the transitions will yield less than optimum results. Thus, it is important that both phase and frequency of the sample clock be synchronized with the chip rate.

Synchronization of the BAC clock with the chip sequence can be done with the circuit shown in Figure 14. Signal A from the Costas demodulator is applied directly to the Barker decoder, and samples are taken at a rate of RC samples/s, as shown by Waveform D in Figure 13(d). Because the chip rate and the RF carrier were coherent on transmission, the chip rate at the receiver can be derived from the Costas VCO, by a simple divide-by-m circuit as shown. [m is the ratio of the intermediate frequency

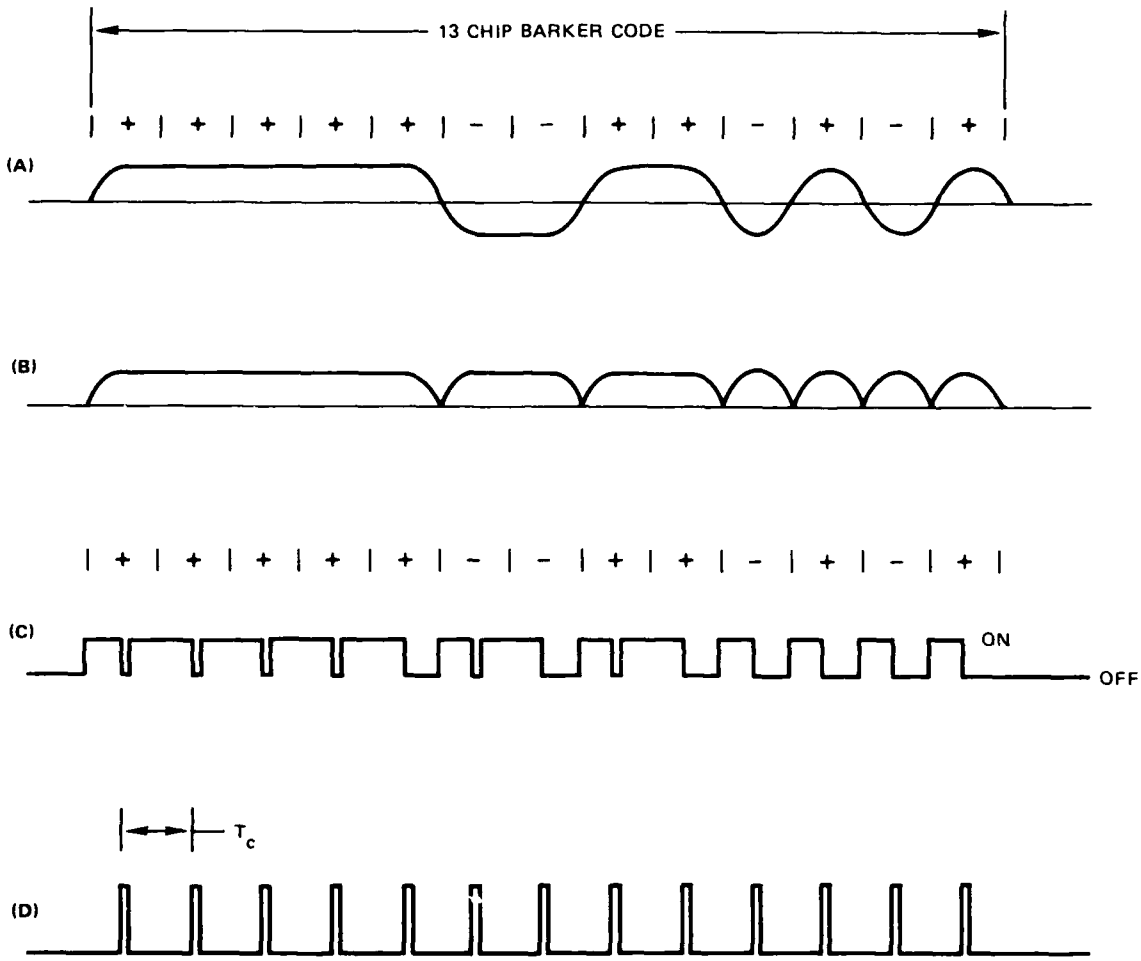

FIGURE 13 CHIP SYNCHRONIZER WAVEFORMS

(the VCO) divided by the chip rate.] Synchronization of the samples with the chip interval is accomplished with a peak (bit transition) detector. This particular device (e.g., Burr-Brown 4085), is a S/H amplifier that tracks the input signal until a maximum amplitude is reached. (Operation of the peak detector is described below.) The analog output of the device (not shown) is held at the maximum value and detection of the peak is indicated by the STATUS output. This signal is used to initiate a sample and to reset the divide-by-m clock thus

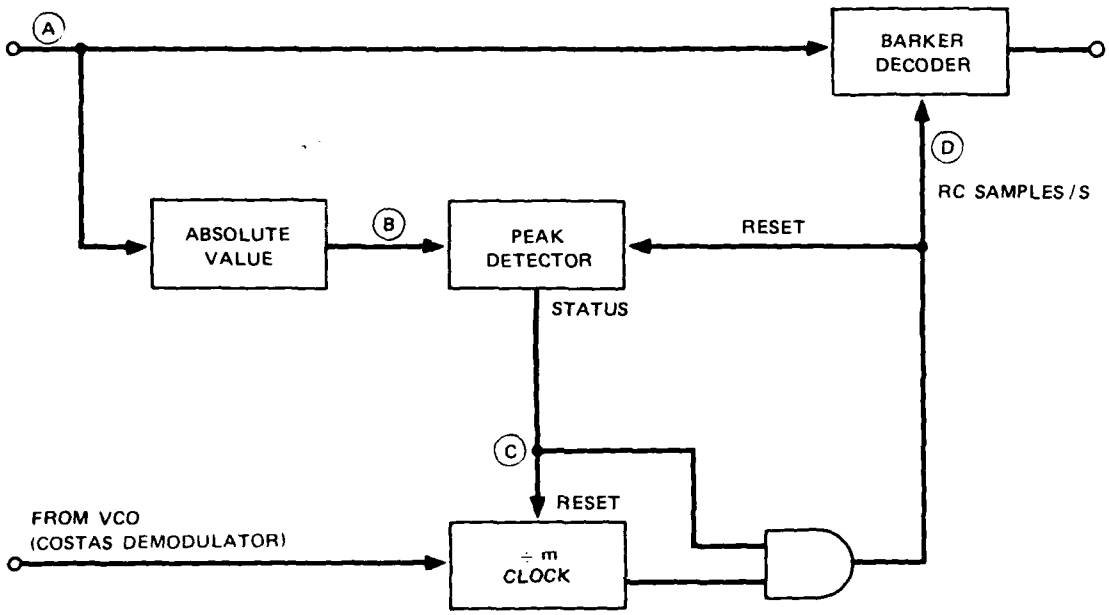

FIGURE 14 CHIP SYNCHRONIZATION CIRCUIT

synchronizing the sample clock with the chip rate. If a peak does not occur within a chip interval, for example, during the occurrence of a string of two or more marks or spaces, the sampling pulses will be obtained directly from the divide by m clock.

Once synchronization is established by the occurrence of a peak, the sample clock should remain closely matched, at least on a short-term basis, with the received signal because of the frequency stability of the transmitter and receiver. If a false peak should occur, synchronization will be reestablished on the next real peak.

The STATUS signal, shown by Waveform C in Figure 13, results from a voltage comparator connected to the output of the analog S/H and to the analog input. As long as the two inputs to the voltage comparator have the same relative sense (for example, when the input voltage increases

monotonically with time), the STATUS will remain in the ON state as shown in Figure 13 (Waveform C). When a peak (defined as a negative inflection point) is detected, or when the input signal decreases with time, the STATUS will be in the OFF state. [Note that in Figure 13 (Waveform C) the first four OFF states result from the sample clock, Waveform D, which is synchronized from a previous peak.] The transition from the ON to the OFF state (i.e., the fifth ON-OFF transition of Waveform C), occurs when a peak is detected.

Noise and interference can cause jitter in the STATUS output and the detection of false peaks. To minimize the effects of small noise peaks, hysteresis can be added to the peak detector. In the Burr-Brown 4085, this is accomplished by the addition of a few resistors and a voltage reference. To minimize the detection of false peaks, logic circuits may be added to enable the peak detector to function only during a narrow time interval centered around the expected peak.

6.5 Detection Logic

The output of the Barker decoder will consist of a series of 13 samples for each symbol transmitted as shown in Figure 15. Each of these samples is a potential signal with a resolution (333 μs) roughly equal to the reciprocal bandwidth of the transmitted signal. Multipath signals that are separated by at least this amount will be resolved and appear as two or more peaks with approximately constant amplitudes. Modes closer together will appear as a single signal with a time-varying amplitude due to constructive and destructive interferences. From sequences such as these, it is necessary to determine the transition between marks and spaces, and whether a particular interval is a mark or a space. Although the intersymbol separation is assumed to be known in Figure 15, this is one of the quantities that must be determined.

The detection procedure is based on the assumption that the ray paths constituting an HF path will not change appreciably in an intersymbol period. This assumption is reasonable because adjacent symbols are separated by 8.67 ms for a 3-kHz bandwidth, a period generally far

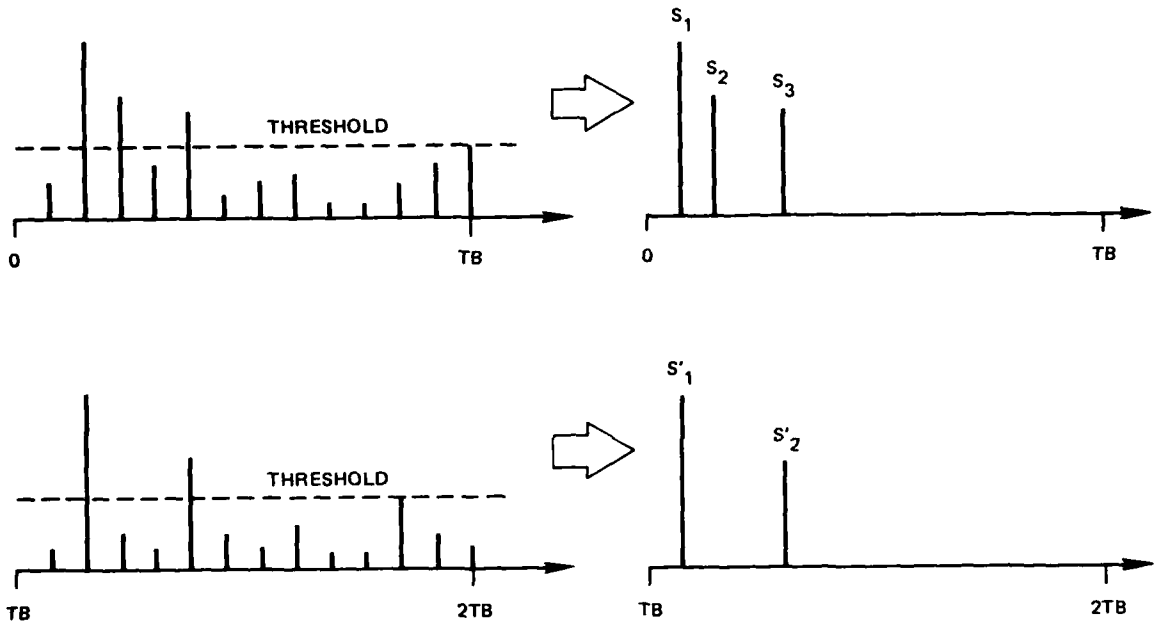

FIGURE 15 OUTPUT OF BARKER DECODER FOR TWO CONSECUTIVE MARKS

too short for significant changes to occur in the ionospheric path. Signals that do not correlate are assumed to be interference or noise and are not considered in the correlation.

In Figure 15 the signals that exceed the threshold (shown by the broken line) are shown on the right. Three potential signals are shown in the upper right and two are shown in the lower right. Because the upper and lower frames are separated by an intersymbol period (TB), the correlation between signals arriving over the same path can readily be seen. Hence, S1 and S3 are identified as signals, and S2 is identified as noise or interference.

A flowchart for the detection algorithm is shown in Figure 16. Samples taken at the chip rate, 1/TC, are compared with samples taken exactly one intersymbol period (TB) earlier. If the magnitude of both samples exceeds the calculated threshold, indicating a correlation, the sign of the current sample is delivered to an S/H, and a new sample is taken. If, however, the magnitude of either, or both, samples is less than the threshold, there is no output to the S/H, and the value of the last correlated sample is retained.

Thus, the output of the detector consists of marks or spaces in accordance with the correlated samples. Mark-space transitions occur only when the sign of consecutive correlated samples change, and in the ideal case, will indicate the appearance of the first of possibly several multipath pulses of the same sign. Because the signal can be detected independently on any of the multiple pulses, diversity protection against fading is obtained. The output remains mark or space until changed. False changes are suppressed because a change is effective only when an above-threshold pulse occurs at a time in the intersymbol period corresponding to a previous above-threshold pulse, and has the opposite sign. To further reduce the false alarm rate for a given threshold setting, the magnitudes of two or more consecutive samples can be averaged and used either for the stored symbol, the instantaneous symbol, or both, depending on the total number of pulses observed over the course of several symbols.

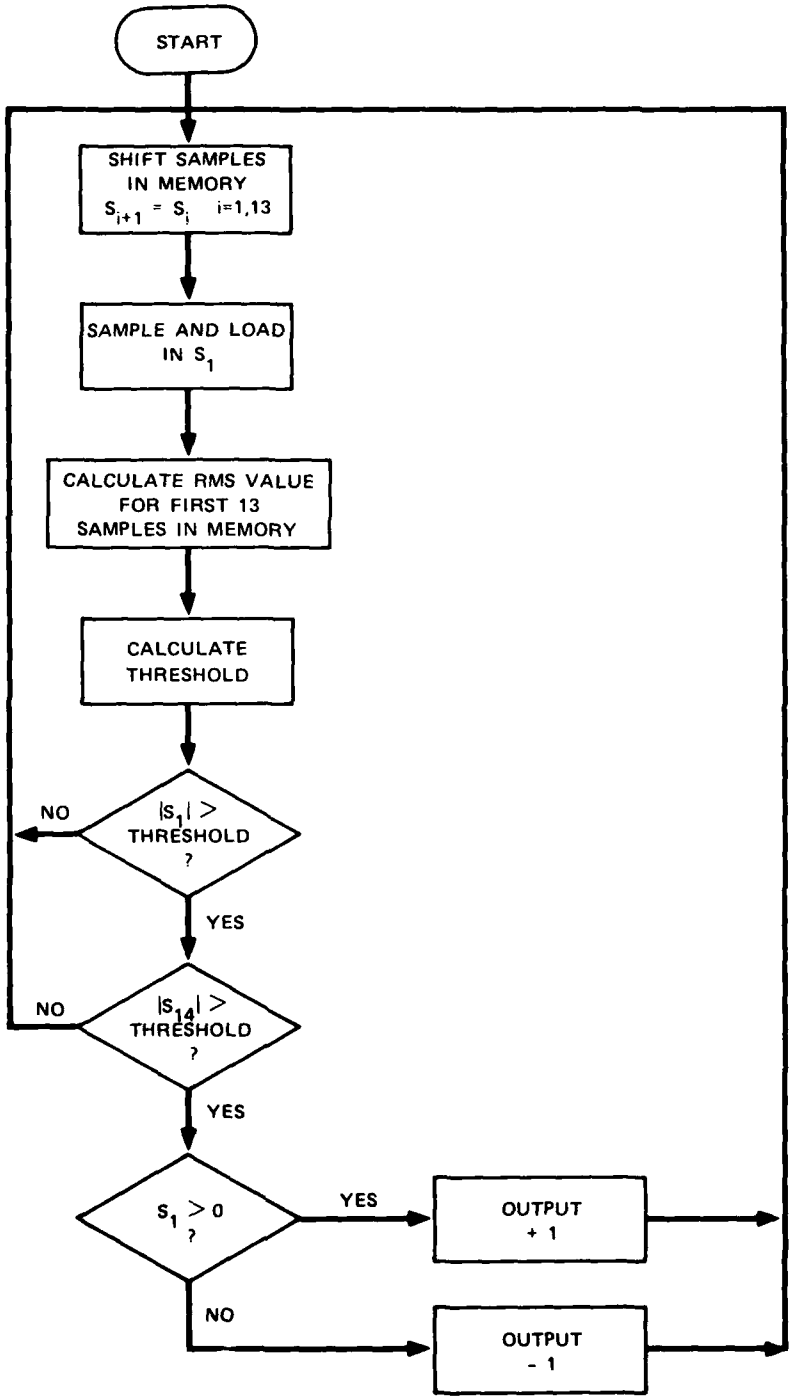

FIGURE 16 DETECTION LOGIC FLOWCHART

Resolution of the mark-space ambiguity is accomplished by referencing all symbols to the preamble, identified by the occurrence of eight consecutive symbols of the same polarity. The detection of the preamble can easily be done through software with the INTEL 2920. Alternatively, digital hardware logic, similar to that used in the UART for start bit verification (see Section 5.6), can be used. If the preamble is negative (space), all subsequent symbols will be inverted. If the preamble is positive (mark), no action is taken on the bit steam.

The algorithm described above appears to be within the capability of the INTEL 2920; a detailed analysis is required to provide a definitive answer.

6.6 Character Decoder

Conversion from a serial data stream used in transmission over the HF sky-wave channel to a parallel format for interface with the controller, can readily be done with a UART. In the transmit mode, the device performs a parallel-to-serial conversion that generates a waveform that can be used in the modulator to provide the PSK modulation. In the receive mode, the conversion is from serial-to-parallel; and the device serves as the interface between the detection logic and the controller.

The UART is designed to process asynchronous data; therefore, the transmitter and receiver do not need to be synchronized. Clocks at both receiver and transmitter typically operate at 16 times the data rate measured in bauds, or the number of signal changes per second. For a low-speed teleprinter that operates at 100 baud, the internal clock in the UART must operate at 16 X 100 = 1600 Hz. At the receiver end, the required clock reference is extracted from the signal data line; synchronization is on a frame by frame basis (where a frame is an asynchronous serial data word consisting of a start bit, one or two stop bits, a parity bit and 5 to 8 data bits). As shown in Figure 17(a) the UART data word is organized as follows:

(1) The serial line is HIGH between words. This is called a mark, and a LOW state is called a space.

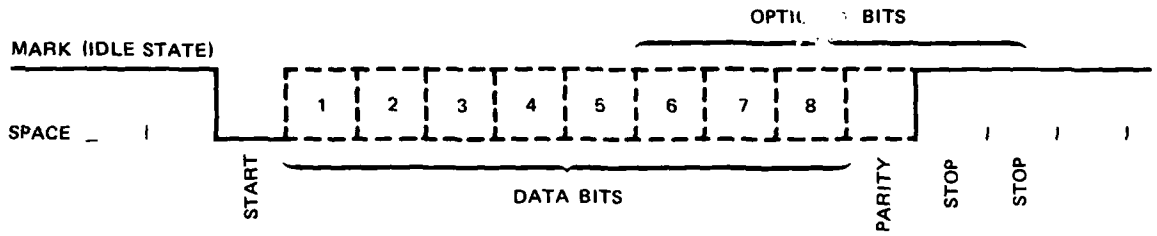

(a) UART DATA FORMAT

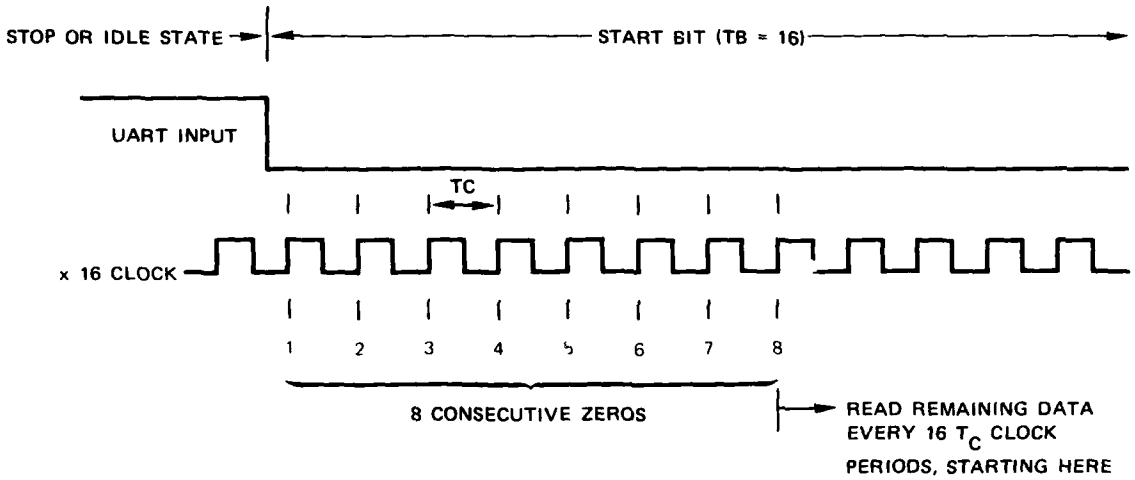

(b) START BIT VERIFICATION

FIGURE 17 UART DATA FORMAT AND START-BIT DETECTION

(2) A start bit is always LOW.

(3) The data bits (five to eight in number) follow the start bit.

(4) The parity bit (odd or even) is computed from the number of data bits used.

(5) Either one or two stop bits (HIGH level) can be used.

Operation of the UART can be understood by referring to Figure 18. Transmit and receive functions are shown in two separate sections for

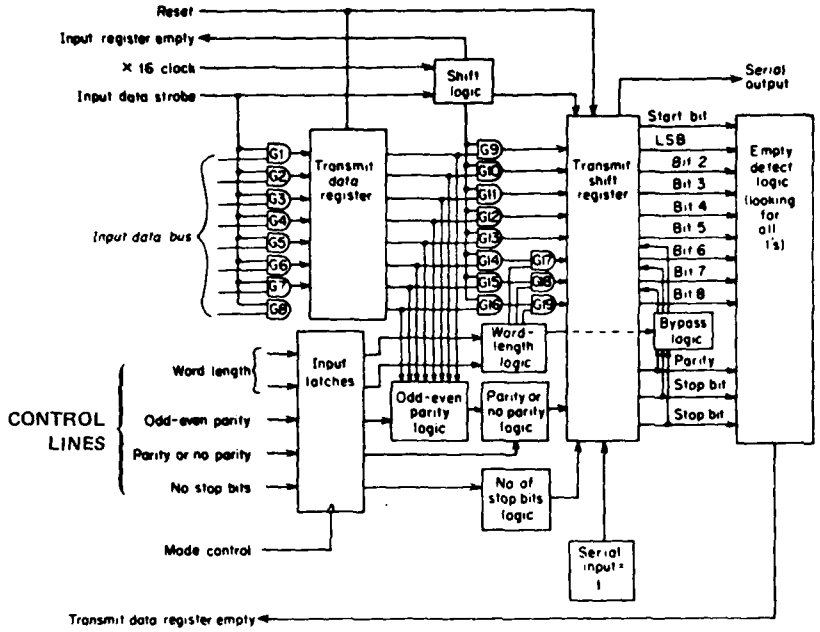

(a) FUNCTIONAL DIAGRAM FOR THE TRANSMIT SECTION OF A UART

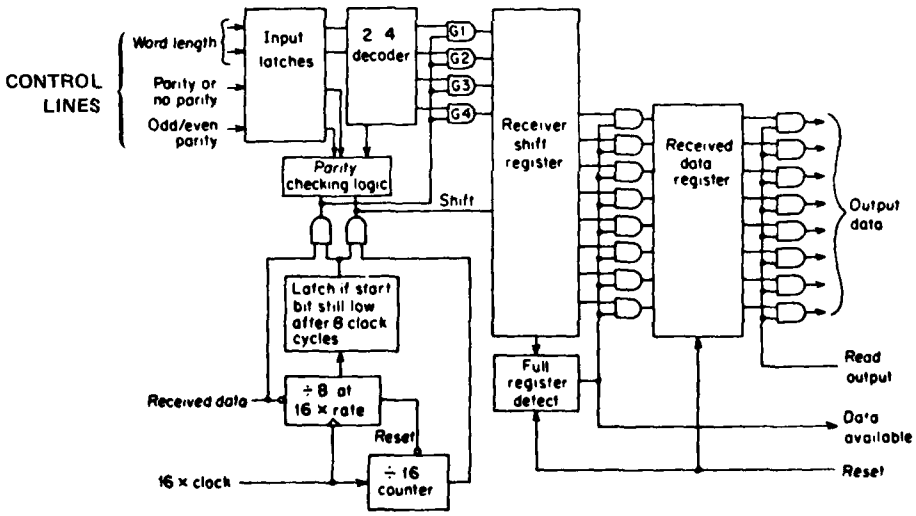

(b) FUNCTIONAL DIAGRAM FOR THE RECEIVER PORTION OF A UART

FIGURE 18 SIMPLIFIED FUNCTIONAL BLOCK DIAGRAM OF A UART

clarity. In an actual UART the X 16 clock input and the five control lines are common to both transmitter and receiver.

Operation of the UART as a transmitter or receiver is selected by the five control inputs. With these inputs the mode and the serial format of each UART word in terms of length, number of stop bits, and parity can be set to suit the user.

In the transmit mode, data in the transmit shift register are shifted out at the transmit clock rate while new data are being held in the transmit data register. When the transmit shift register is empty, data are automatically loaded into it from the holding register. In most UARTs the eight input data bus is also used to obtain the status of the various operations. By proper addressing, eight different status conditions, e.g., framing error, parity error, or transmit-data-register empty, may be determined.

In the receive mode, the input data are first scrutinized for a negative edge of the start bit. Because the start bit is always preceded by a HIGH state (the preamble and the stop bit are always HIGH), the leading edge of the start bit will always be well defined. This negative edge gates the X 16 clock in a divide-by-eight counter. If the input is still low after eight counts [Figure 17(b)], the transition is considered to be a valid start bit and a latch is set, which in turn resets a divide-by-16 counter. Because the X 16 clock runs at 16 times the bit rate, the eighth cycle occurs in the middle of the start bit. Each time the counter times out (16 cycles of the X 16 clock), the epoch will be centered on a new data bit, and the present value of the received data will be clocked into the shift register. This procedure ensures that the received serial data is sampled near the middle of the bit after it has stabilized.

7 CONCLUSIONS

This report describes the concept and design of an adaptive HF radio, in terms of signaling waveform, linking protocols, and hardware. The study indicates that a low-cost adaptive control unit can be built and attached to suitable existing HF transceivers, to improve their performance. The linking of the transceiver and the adaptive control unit will permit the radio to be used by an unskilled operator and will permit rapid link establishment even in an adverse environment in which propagation conditions are changing and completely unknown to the operator.

Because the adaptive radio does not require a prearranged schedule, nor an a priori knowledge of propagation conditions, a network of such radios should be especially useful in the recovery period following a nuclear attack when the ionosphere is highly disrupted and normal frequency selection criteria can no longer be used. The use of a robust signal waveform in the form of a 13-bit Barker code, and a linking protocol that provides link establishment with any one of a few dozen stations in the network in less than 60 s, provides a means of communicating essential information between distant points without depending on elements vulnerable to destruction, or on the existence of intermediate terminals.

BIBLIOGRAPHY

Ames, J., T. Croft, T. Adams, and J. Johnston, "High-Frequency, Low-Data Rate, Low-Probability-of-Intercept Communications Using Sky Wave," Stanford Research Institute, Menlo Park, CA (May 1977) (unpublished).

Balser, M., and W. B. Smith, "Some Statistical Properties of Pulsed Oblique HF Ionospheric Transmissions," J. Res. NBS-D Radio Prop., Vol. 66-D, No. 6, pp. 721-730 (November-December 1962).

Carlson, A. B., Communication Systems: An Introduction to Signals and Noise in Electric Communications, 1st Ed., (McGraw-Hill, Inc., New York, NY, 1975).

Cook, E. C., and M. Bernfeld, Radar Signals, (Academic Press, 1967).

Costas, J. P., "Synchronous Communications," Proc. IRE, Vol. 44, pp. 1713-1718 (1956).

Dixon, R. C., Spread Spectrum Systems, (John Wiley & Sons, Inc., New York, NY, 1967a).

Dixon, R. C., Spread Spectrum Techniques, (IEEE Press, 1967b).

Duttweiler, D. L., "The Jitter Performance of Phase-Locked Loops Extracting Timing From Baseband Data Waveforms," The Bell System Tech. J., Vol. 55, No. 1, pp. 37-58 (January 1976).

Gardner, F. M., Phaselock Techniques, (John Wiley & Sons, Inc., New York, NY, 1979).

Goldberg, B., "HF Radio Data Transmission," IRE Trans. Comm. Sys., Vol. CS-9, No. 1, pp. 21-27 (March 1961).

Hollis, E., "Comparison of Combined Barker Codes for Coded Radar Use," IEEE Trans. Aerospace Electron. Sys., Vol. AED-3, No. 1, pp. 141-143 (January 1967).

Jones, J. J., "Hard-Limiting of Two Signals in Random Noise," IEEE Trans. Infor. Theory, Vol. IT-9, No. 1, pp. 34-42 (January 1963).

Kanellakos, D. P., "Response of the Ionosphere to the Passage of Acoustic-Gravity Waves Generated by Low-Altitude Nuclear Explosions," J. Geophys. Res., Vol. 72, No. 17, pp. 4559-4576 (September 1967).

Lomax, J. B., and D. L. Nielson, "Observation of Acoustic Gravity Wave Effects Showing Geomagnetic Field Dependence," J. Atmos. Terr. Phys., Vol. 30, No. 5, pp. 1033-1050 (May 1968).

Monsen, P., "Adaptive Equalization of the Slow Fading Channel," IEEE Trans. on Comm., Vol. COM-22, No. 8 (August 1974).

Morgan, D. R., "Adaptive Multipath Cancellation for Digital Data Communications," IEEE Trans. Comm., Vol. COM-26, No. 9, pp. 1380-1390 (September 1978).

Price, R., and P. E. Green, Jr., "A Communication Technique for Multipath Channels," Proc. IRE, Vol. 46, pp. 555-570 (March 1958).

Saltzberg, B. R., "Timing Recovery for Synchronous Binary Data Transmission," Bell Sys. Tech. J., Vol. 46, No. 3, pp. 593-622 (March 1967).

Schwartz, M., W. R. Bennett, and S. Stein, Communication Systems and Techniques, (McGraw-Hill Book Co., New York, NY, 1966).

Silber, D., "Probabilities of Detection and False Alarm for a Coherent Detector with Amplitude Limiting of Arbitrary Hardness," IEEE Int. Convention Record, Part 7, pp. 107-123 (1966).

Stoffregen, W., "Traveling Ionospheric Disturbances Initiated by Low Altitude Nuclear Explosions," AGARD Proceed., No. 115, Effects of Atmo. Acous. Grav. Waves on EM Wave Prop. (October 1972).

Thomas, L., and R. E. Taylor, "Sporadic-E Phenomena Associated with the High Altitude Nuclear Explosions over Johnston Island," J. Atmos. Terr. Phys., Vol. 21, No. 213, pp. 205-208 (June 1961).

Waggener, W. N., "Designer's Guide to: Digital Synchronization Circuits--Parts 1, 2, & 3," EDN, Vol. 21, pp. 56-61, 75-82, 99-105 (November 1976).

Young, E. M., "HF Communication Effects: Prediction of Propagation Parameters Affecting Error Rate," Final Report, Contract DA 36-039, SRI Project 3670, Stanford Research Institute, Menlo Park, CA (August 1965).

GLOSSARY

A/D--Analog to Digital

AFSK--Audio Frequency-Shift Keyed

AGC--Automatic Gain Control

AGW--Acoustic-Gravity Wave

AM--Amplitude Modulation

ASCII--American Standard Code for Information Interchange

BAC--Binary-Analog Correlator

BDD--Bucket-Brigade Delay

CONUS--Continental United Status

EAM--Emergency Action Message

EMP--Electromagnetic Pulse

EPROM--Erasable Read Only Memory

ES--Sporadic E

FMCW--Frequency-Modulated Continuous Wave

FSK--Frequency-Shift Keying

HF--High Frequency, Typically 3 to 30 MHz

IF--Intermediate Frequency

IMCOM--Trademark for a Type of Metallic Dispersive Pulse Compression Delay Device

LOF--Lowest Observed Frequency

LQA--Link Quality Analysis

LSI--Large-Scale Integration

MEECN--Minimum Essential Emergency Communication Network

MOF--Maximum Observed Frequency

MUF--Maximum Useable Frequency

NRZ--Nonreturn to Zero

ORANGE--Megaton High-Altitude Nuclear Test Conducted at Johnston Island

PEP--Peak Envelope Power

PLL--Phase-Lock Loop

PROM--Programable Read Only Memory

PSK--Phase-Shift Keying

PTT--Push to Talk

RC--Chip Rate

RAC--Reflective Array Compressor

RAM--Random-Access Memory

ROM--Read Only Memory

RF--Radio Frequency

SAW--Surface Acoustic Wave

S/H--Sample and Hold

SNR--Signal to Noise

SSB--Single Sideband

SSR--Static Shift Register

TEAK--Megaton High-Altitude Nuclear Test Conducted at Johnston Island

UART--Universal Asynchronous Receiver-Transmitter

VCO--Voltage-Controlled Oscillator

Appendix

QUICK-LOOK TEST PLAN FOR ADAPTIVE-CHANNEL-SELECTION HF RADIO

SRI International initiated and is studying, under Contract DNA001-79-C-0364, a concept for providing a low-cost form of short-to-long range sky-wave links that are self-adaptive to whatever propagation conditions may exist. The basic link concept is cooperative operation by small HF SSB radio sets that combine testing of several potential channels with selective calling to initiate each new exchange of communication. The type of communication envisioned is intermittent, short, two-way simplex exhanges. Long or continuous exchanges would be coordinated on the automatic system, but conducted on conventional systems.

In looking for radio equipment with which to test potential signalling and control techniques, we learned that Collins Radio Company had recently developed a prototype channel-selection and selective-calling accessory control unit for their self-tuning aircraft HF radio. Although their technique differs in significant ways from the technique evolving at SRI, it is similar enough that a field-test of the Collins equipment would provide a quick look at the potential performance of a self-adaptive radio system. As Collins has offered to make their prototype equipment available for such a test, significant performance information can be obtained at relatively low cost.

1. Test Objectives

The following are the test objectives:

- Determine the degree to which automated channel selection, using conventional signalling as in the Collins radios, makes the best use of available propagation support.
- Determine the call-up reliability of a straightforward automatic channel-selection technique using modest equipment on a long temperature-zone-to-auroral-region

PRECEDING PAGE BLANK-NOT FILMED

path. This will be a rough simulation of the conditions on shorter paths some tens of minutes following high-altitude nuclear detonations.

- Gain experience in testing and evaluating automated channel selection HF systems for communication restoration.
- Establish a test-bed for developing and evaluating improved equipment and techniques.

2. Path

There are several possibilities for a test path. One is the 3500-km long path between SRI field sites at Menlo Park, California, and Chatanika, Alaska. One-hop F-layer propagation at 2°-ray take-off angle is possible, but will be suppressed by the antenna patterns. The most likely propagation is 2-hop F-layer reflection, at a take-off angle of 14° at the transmitter. Various combinations of E-layer modes are also possible. Because the path is north-south and traverses the midlatitude trough, critical frequencies and absorption will vary significantly along the path. The marginal availability of one-hop ray-paths, possibly employing upper (Pedersen) rays, should add some unconventional propagation at frequencies outside the normal maximum observed frequency-lowest observed frequency (MOF-LOF) range, in a qualitative simulation of some of the unconventional propagation sometimes observed during ionospheric recovery from nuclear blackout. The aurora can provide multipath and Doppler distortions, that, in a gross, qualitative way, simulate similar nuclear-induced effects after the intense absorption phase.

Perhaps greater auroral effects, at increased logistical cost, can be obtained on a path terminating at Goose Bay, and originating from Montana. Equatorial spread-F effects can be measured from the facilities at Kwajalein.

3. Equipment

The communication equipment to be tested will consist of two complete sets of Collins Model 728U-2/490A-1 transceiver/coupler HF systems designed for airborne operation, with Model 514A-(X) engineering

prototype automatic, selective address-control units. These are 400-W output, electronically tuned transceivers with 10-ms switching from transmit to receive mode, and 1-s antenna-tune time on transmit. They are basically SSB radios, but the automated gain control (AGC) is optimized separately for voice and data modes. The special control unit is based on a microprocessor that:

- Stores preset frequencies
- Cycles the transmitter and receiver through these frequencies in a nonsynchronized sounding mode
- Keeps a link quality analysis (LQA) array indicating the relative quality of each frequency
- Calls selectively on demand using the LQA as guidance.

A critically important aspect of the tests is to measure independently the potential propagation support, to evaluate the ability of the automatic communications equipment to utilize marginal propagation conditions. Clearly, such an evaluation requires an independent measure of these conditions, which will be provided by a synchronized oblique (FMCW) ionosphere sounder system. The sounder system will operate in one direction, will use the same antennas as the communication system, and will be adjusted to have a power sensitivity similar to that of the communication system.

The equipment under test will be interconnected with a programmer, signal generator, and recorder to permit systematic data collection without continuous operator attention. (See Figure A-1.) The control unit will be mostly a time programmer with a small amount of logic. The programmable audio generator will provide the test signals that are passed through the radio to evaluate the communication quality of the channel it selects. The data recorder will be a multichannel, analog tape machine. A MODEM will convert the Collins control unit digital information to analog form. The ionograms will be recorded directly on film or facsimile paper.

An oscilloscope, audio amplifier, and speaker will be provided to enable the operator to monitor the channel test signals and the radio environment in which they are received. A microphone and separate

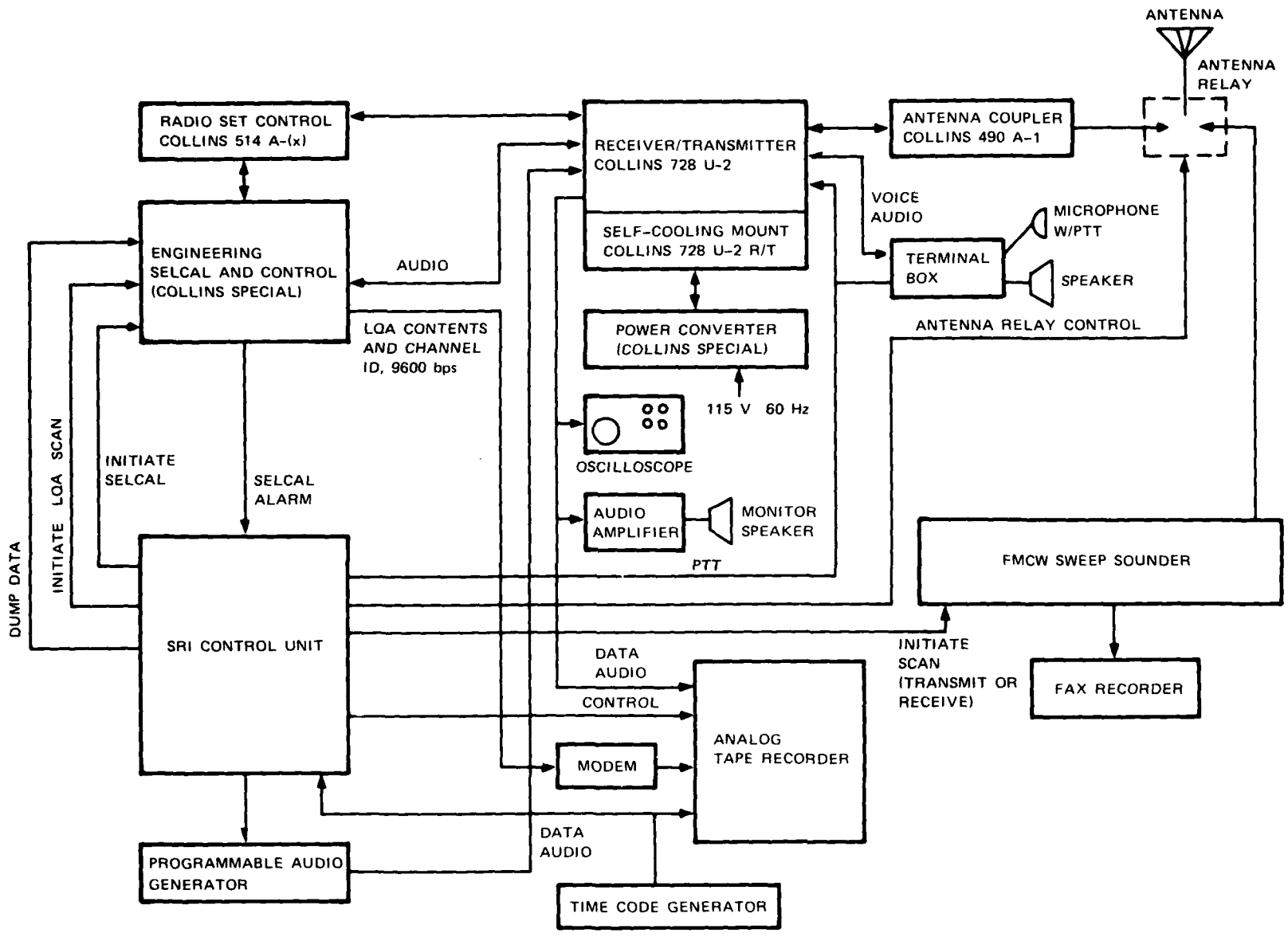

FIGURE A–1 OPERATIONAL TEST SYSTEM FOR AUTOMATED RADIO TRANSCEIVER

speaker will permit voice tests or experimental coordination using the radios in the voice mode.

A relay will switch the antenna to the sounder or test radio on a synchronized schedule.

The Menlo Park site has a Log-Periodic antenna (LPA) that can be directed toward Alaska. The Chatanika site has a large sloping "V" antenna with a broadband 50-Ω balun directed toward Menlo Park; however, it may be preferable to install a transportable LPA.

4. Test Signals

4.1 Frequencies

The Collins 728 can be programmed with 20 frequencies, which is approximately the right number to take advantage of unconventional propagation modes extending over narrow frequency bands. Our experience suggests that fewer than 20 channels would be inadequate to accommodate diurnal changes, unconventional modes, and random loss of channels to interference from other users. We expect to use frequencies on which we are authorized to transmit HF radar signals on a noninterfering basis, as well perhaps as step-frequency sounder channels or unused frequencies in the aeronautical mobile or government bands. The SECANT factor for the two-hop F-mode is approximately 2.5, and the lowest vertical incidence critical frequency is expected to be 3 MHz or 4 MHz (because of the high solar activity), which will give a minimum MUF of 7.5 MHz to 10 MHz. The highest MUF will probably exceed the 30 MHz capability of the available equipment.

4.2 Collins Link Quality Probing Signal

The Collins special SELCAL control unit generates an audio FSK signal at a 300-bps data rate for both probing and calling. The basic signal is a 30-bit word consisting of a 6-bit synchronization field followed by 24 bits that constitute an address, either of the called or calling station. Even though the basic word is only 100-ms, long, and receiver tuning and settling should take no longer than 20 ms,

the receiver single-frequency dwell time, T_d, is set at 500 ms. Because the system is not synchronous, the transmitter must dwell long enough on each channel to permit a complete receiver cycle, plus a little overlap, yielding $(n + 1)\ T_d$, where n is the number of channels, as the duration of a probing or calling signal on a single frequency. A complete probing scan thus requires $n(n + 1)\ T_d$ seconds to complete, or 210 s for a 20-channel system.

The Collins receiving equipment continually scans the stored channels, and measures a link quality factor whenever it encounters a recognizable probe signal. The results of these measurements are stored in a LQA array as a numerical factor.

4.3 Selective Call Signal

When a call is to be made, the calling station selects the channel having the highest LQA factor, and transmits an $(n + 2)\ T_d$ second call terminated by its own address. The station, then, listens for a reply consisting of its address followed by the called station's address. If such a reply is received, the station remains on the channel and activates a SELCAL alarm; otherwise it tries the next best channel, and so on. The called station stops scanning when it receives a signal containing its address, and sets the SELCAL alarm when it replies.

4.4 Channel Evaluation

The channel found by the Collins equipment will be tested for communication quality by transmitting an audio FSK signal at slow and fast speeds. The received signal will be filtered to separate the two tones, permitting an estimate of SNR and pulse distortion. Provisionally, the test signals will be as follows:

- 1800 Hz, 2800 Hz
- 20-ms period, 2-ms period.

The slow pulses will be sent for 10 s, the fast for 4 s.

4.5 Ionogram Soundings

Propagation support will be measured by a B/R FMCW synchronized oblique-sounder system transmitting from Alaska to California. One sounding will be made each hour immediately prior to the test transmissions. The sounding will be at a 100-kHz/s rate, requiring 4 min 40 s to sweep from 2 MHz to 30 MHz. As the analysis noise bandwidth of the sounder receiver is only a few Hz, the sounder system can match the sensitivity of the communication system with only a few watts of output power. The exact value will be determined based on the filters used in the Collins FSK probing receiver and the test signal filters.

5. Test Sequence

The test sequence will consist basically of an ionogram sounding, a Collins LQA generation scan, a selective call, and a two-way channel test. (See Tables A-1 and A-2.) Both experimental systems will be constructed similarly: one will have a sounder transmitter and the other, a sounder receiver. The control units will be programmed slightly differently to account for the sounder difference, and to cause only one set to initiate the selective calls. The sequence can be changed in the field as needed. Experimental runs will be initiated once an hour.

If practical, the test sequence will be varied to try both the Collins LQA approach, and a simpler high-to-low channel sequential selective call.

The test system will be operated on alternate days. The sampling of ionospheric conditions should be as good as with continuous hourly runs, and the interference to others will be less.

6. Data Processing

6.1 Signals

The audio frequency shift keyed (AFSK) test signals will be filtered to separate them, transferred to a convenient hard-copy medium, and then the average signal and noise level of each experimental period

Table A-1

CONTROL FUNCTION SEQUENCE
FOR UNIT (PROGRAM) "A"

Step	Time (s)	Action
1	T_0	Receive cycle-start pulse from master-event timer (e.g., once an hour). Connect antenna to sounder. Start ionogram recorder.
2	$T_0 + 5$	Start sounder scan (receive) (Delay to stabilize recorder.) (Accuracy requirement ≈ ±0.1 ms.) (4 min, 40 s sounding 2 MHz to 30 MHz.)
3	$T_0 + 290$	Switch antenna to Collins coupler Stop ionogram recorder.
4	$T_0 + 291$	Initiate LQA scan (transmit). [Scan time = $n(n + 1)\ T_d$ = 210 s for 20 channels, and T_d = 0.5 s per channel receiver dwell.]
5	$T_0 + 501$	LQA scan ends (no control action). (Collins equipment is now in receive scan mode.) Enables control to respond to SELCAL alarm.
6	T_1	Receive SELCAL alarm. Start tape recorder. (Collins equipment responds to SELCAL for 1 s.)
7	$T_1 + 2$	Request data dump (LQA, active channel).
8	$T_1 + 27$	Stop tape recorder. Set audio generator to steady tone (1800 Hz). Activate push-to-talk (PTT).
9	$T_1 + 30$	Set audio generator to slow FSK pulses (1800 Hz, 2800 Hz, 20 ms).
10	$T_1 + 40$	Set audio generator to fast FSK pulses (1800 Hz, 2800 Hz, 2 ms).
11	$T_1 + 44$	Disable PTT.

Table A-2

CONTROL FUNCTION SEQUENCE
FOR UNIT (PROGRAM) "B"

Step	Time (s)	Action
1	T_0	Receive cycle-start pulse from master-event timer. Connect antenna to sounder.
2	$T_0 + 5$	Start sounder scan (transmit).
3	$T_0 + 290$	Switch antenna to Collins coupler. (Collins equipment updates LQA matrix under its own control.)
4	$T_0 + 501$	Start tape recorder.
5	$T_0 + 503$	Request data dump. (LQA, preferred or active channel, any other.) (Allow 2 s for transfer.)
6	$T_0 + 505$	Initiate SELCAL using LQA. [SELCAL time = $(n + 4)\ T_d$, including response = 12 s per channel for 20 receive channels, longer if more than 1 channel must be tried.] Stop tape recorder. Enable control to respond to SELCAL alarm.
7	T_1	Receive SELCAL alarm (response from "A"; occurs approximately 1 s after T_1 at "A"). Start tape recorder.
8	$T_1 + 2$	Request data dump.
9	$T_1 + 4$	Set audio generator to steady tone (1800 Hz for data processing reference). Stop tape recorder. Activate PTT (start test transmission).
10	$T_1 + 7$	Set audio generator to slow frequency shift pulses (nominal 1800 Hz, 2800 Hz, 20 ms).
11	$T_1 + 17$	Set audio generator to fast frequency shift pulses (nominal 1800 Hz, 2800 Hz, 2 ms).
12	$T_1 + 21$	Disable PTT. Start tape recorder.
13	$T_1 + 50$	Stop tape recorder.

will be measured manually. The raw data could be processed digitally, but the small amount of data and the simplicity of the answers sought makes manual processing appear more economical. The processing will yield the following quantities for each data run:

- $\overline{SNR}$ for each tone
- $\overline{SNR}$ for both tones
  - average of the averages
  - average of best SNR for each pulse period, i.e., selection diversity
- $\bar{N}_1 - \bar{N}_2$, a measure of the interference level. (The noise in the two tone channels should be equal.)

The pulse distortion will be measured either directly or by noting the difference between the SNR of the short pulses and the long pulses.

The filters will be nominally 1-kHz bandwidth for the short pulses, and 100 Hz for the long. A 3-s steady tone will be transmitted at the start of each pulse sequence to permit measurement of the effective audio frequency and adjustment of the filters to compensate for excessive carrier frequency drift. The Collins 728 frequency stability is specified as 5×10^{-7}, but the period over which this applies is not stated. For two units, the error could be 1×10^{-6}, or 30 Hz at 30 MHz. This is probably not worth correcting for a 1-kHz filter, but correction may be necessary to prevent amplitude and delay errors in the 100-Hz filters.

With hourly data runs on approximately 40 data-collection days, there will be some 960 data sets. Each will have approximately 17 s of tone data, for a total of 16,320 s or 4.5 hours. This relatively small amount of data means that the adaptive parts of the data processing, such as frequency correction and time synchronization of the pulse amplitude measurements, can most economically be performed manually. Similarly, the few seconds of recorded data preceding the tones can be evaluated aurally at the time of data processing to determine the presence of interference.

6.2 Ionograms

There will be some 960 ionograms, recorded directly by facsimile or film.

The analysis will consist of determining the MOF and LOF (within the limitations of the sounder) plus identifying any test frequencies for which the general MOF-LOF determination is inappropriate, i.e., isolated propagation outside the MOF-LOF or gaps within it. The degree of multipath will also be determined, perhaps as a simple measure of the frequency range over which it exceeds a threshold amount. It should be possible to perform the simple analysis envisioned in approximately 2 min for each ionogram.

6.3 LQA

The LQA data recorded from the Collins control unit will be reconverted to digital form and then summarized in relation to the ionogram data. For example, the channels showing acceptable quality will be plotted on diurnal curves of MOF-LOF.

7. Analysis

As a rough first look at the "bottom-line" performance of the automated channel selection concept, we will simply summarize the percent of hourly runs that result in a link-up and an acceptable SNR. To understand the process, however, the failures will be analyzed to determine, from the ionograms, whether propagation support existed, and from the pulsed-tone data to determine whether channel interference, multipath distortion, absorption, or Doppler shift was a factor.

Assuming that alternating between the regular LQA approach and the simpler sequential-channel SELCAL search, as mentioned in Section 6 of this appendix, is practical, the overall results for the two techniques can be compared to determine their relative effectiveness.

8. Schedule

Table A-3 gives the tasks in sequence (more or less) of performance along with the allotted time per person involved.

The work preparatory to starting the measurements will require some 30 working days by the engineer, but inevitable delays will probably stretch the elapsed time to two months. March and April, or August and September, are good times for the test operations because propagation is changing from winter to summer conditions, or vice versa, and the weather and insect conditions in Alaska are conducive to efficient outdoor work, which may or may not be a factor depending on the necessity of installing or refurbishing antennas. Considering the time required to obtain work authorization and schedule personnel, the later period is probably more realistic.

The only other significant scheduling factor is that Collins needs the radios for two or three trade shows during the year.

Table A-3

TASK PERFORMANCE TIMETABLE

Task	Time (Days)			
	Engineer	Technician	Programmer	Data Aide
Select and locate equipment for two experimental systems	6	2		
Design interfaces and control unit	16			
Construct control units and special interface hardware for two systems	3	15		
Integrate and check out two systems	3	4		
Design data processing procedures and special hardware	5			
Write and test data processing software			8	
Field test equipment on Los Banos-Menlo Park path	3	5		
Ship one set to Chatanika and install		5		
Operate for two months (occasional attention by regular site operator)	10	16		
Process data	10		2	15
Analyze data	10		5	
Write report	12			
Supervision	6			
TOTAL	78	47	15	15

AD-A124 551 AN ADAPTIVE AUTOMATIC HF RADIO(U) SRI INTERNATIONAL MENLO PARK CA N J CHANG ET AL. 01 DEC 80 DNA-5570F DNA001-79-C-0364 2/2

UNCLASSIFIED F/G 17/2.1 NL

END
DATE
FILMED
DTIC

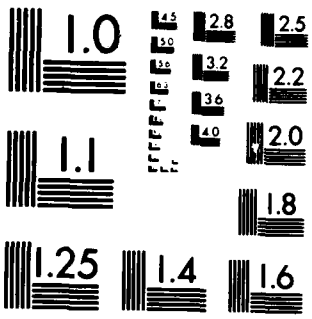

MICROCOPY RESOLUTION TEST CHART
NATIONAL BUREAU OF STANDARDS-1963-A

DISTRIBUTION LIST

DEPARTMENT OF DEFENSE

Command & Control Technical Center
ATTN: C-650, G. Jones
ATTN: C-312, R. Mason
3 cy ATTN: C-650, W. Heidig

Defense Communications Agency
ATTN: J300 for Yen-Sun Fu
ATTN: Code 230
ATTN: Code 205

Defense Communications Engineer Center
ATTN: Code R410, N. Jones
ATTN: Code R123

Defense Intelligence Agency
ATTN: DIR
ATTN: DB-4C, E. O'Farrell
ATTN: DB, A. Wise
ATTN: DT-1B
ATTN: DC-7B

Defense Nuclear Agency
ATTN: NATD
ATTN: STNA
ATTN: RAEE
ATTN: NAFD
3 cy ATTN: RAAE
4 cy ATTN: TITL

Defense Technical Information Center
12 cy ATTN: DD

Deputy Under Secretary of Defense
Comm, Cmd, Cont & Intell
ATTN: Dir of Intell Sys

Field Command
Defense Nuclear Agency
ATTN: FCTT, W. Summa
ATTN: FCTT, G. Ganong
ATTN: FCPR, J. McDaniel

Field Command
Defense Nuclear Agency
Livermore Branch
ATTN: FC-1

Interservice Nuclear Weapons School
ATTN: TTV

Joint Chiefs of Staff
ATTN: C3S Eval Office (HD00)
ATTN: C3S

Joint Strat Tgt Planning Staff
ATTN: JLA, Threat Applications Div
ATTN: JLTW-2

National Security Agency
ATTN: W-32, O. Bartlett
ATTN: B-3, F. Leonard
ATTN: R-52, J. Skillman

DEPARTMENT OF DEFENSE (Continued)

Under Secretary of Defense for Rsch & Engrg
ATTN: Strat & Space Sys (OS)
ATTN: Strat & Theater Nuc Forces, B. Stephan

WWMCCS System Engineering Org
ATTN: R. Crawford

DEPARTMENT OF THE ARMY

Assistant Chief of Staff for Automation & Comm
ATTN: DAMO-C4, P. Kenny

Atmospheric Sciences Laboratory
US Army Electronics R&D Command
ATTN: DELAS-EO, F. Niles

BMD Systems Command
2 cy ATTN: BMDSC-HW

Deputy Chief of Staff for Ops & Plans
ATTN: DAMO-RQC (C2 Div)

Harry Diamond Laboratories
ATTN: DELHD-NW-R, R. Williams
ATTN: DELHD-NW-P

US Army Chemical School
ATTN: ATZN-CM-CS

US Army Comm-Elec Engrg Instal Agency
ATTN: CCC-CED-CCO, W. Neuendorf
ATTN: CCC-EMEO-PED, G. Lane

US Army Communications Command
ATTN: CC-OPS-W
ATTN: CC-OPS-WR, H. Wilson

US Army Communications R&D Command
ATTN: DRDCO-COM-RY, W. Kesselman

US Army Foreign Science & Tech Ctr
ATTN: DRXST-SD

US Army Materiel Dev & Readiness Cmd
ATTN: DRCLDC, J. Bender

US Army Nuclear & Chemical Agency
ATTN: Library

US Army TRADOC Sys Analysis Actvy
ATTN: ATAA-PL
ATTN: ATAA-TCC, F. Payan, Jr
ATTN: ATAA-TDC

DEPARTMENT OF THE NAVY

Joint Cruise Missiles Project Ofc
ATTN: JCMG-707

Naval Air Systems Command
ATTN: PMA 271

PRECEDING PAGE BLANK-NOT FILMED

DEPARTMENT OF THE NAVY (Continued)

Naval Electronic Systems Command
ATTN: PME 117-2013, G. Burnhart
ATTN: PME 117-20
ATTN: Code 31-1, T. Hughes
ATTN: Code 501A
ATTN: PME 106-13, T. Griffin
ATTN: PME 106-4, S. Kearney
ATTN: PME 117-211, B. Kruger

Naval Intelligence Support Ctr
ATTN: NISC-50

Naval Research Laboratory
ATTN: Code 4700
ATTN: Code 4720, J. Davis
ATTN: Code 4780
ATTN: Code 7500, B. Wald
ATTN: Code 7950, J. Goodman
ATTN: Code 4187
ATTN: Code 6700

Naval Space Surveillance System
ATTN: J. Burton

Naval Surface Weapons Center
ATTN: Code F31

Naval Telecommunications Command
ATTN: Code 341

Ofc of the Deputy Chief of Naval Ops
ATTN: OP 981N
ATTN: OP 941D
ATTN: NOP 65, Strat Theater Nuc Warf Div

Office of Naval Research
ATTN: Code 412, W. Condell
ATTN: Code 414, G. Joiner

Strategic Systems Project Office
ATTN: NSP-2141
ATTN: NSP-43
ATTN: NSP-2722, F. Wimberly

DEPARTMENT OF THE AIR FORCE

Aerospace Defense Command
ATTN: DC, T. Long

Air Force Geophysics Laboratory
ATTN: PHP
ATTN: OPR-1
ATTN: LKB, K. Champion
ATTN: CA, A. Stair
ATTN: PHI, J. Buchau
ATTN: R. Babcock
ATTN: R. O'Neil

Air Force Weapons Laboratory
ATTN: NTN
ATTN: NTYC
ATTN: SUL

Air Force Wright Aeronautical Lab/AAAO
ATTN: A. Johnson
ATTN: W. Hunt

Air Logistics Command
ATTN: OO-ALC/MM

DEPARTMENT OF THE AIR FORCE (Continued)

Air University Library
ATTN: AUL-LSE

Air Weather Service
ATTN: DNXP, R. Prochaska

Assistant Chief of Staff
Studies & Analyses
ATTN: AF/SASC, C. Rightmeyer
ATTN: AF/SASC, W. Kraus

Ballistic Missile Office/DAA
ATTN: ENSN, W. Wilson

Deputy Chief of Staff for Rsch, Dev & Acq
ATTN: AFRDSS
ATTN: AFRDS, Space Sys & C3 Dir
ATTN: AFRDSP

Deputy Chief of Staff for Ops, Plans & Readiness/XOK
ATTN: AFXOKCD
ATTN: AFXOKT
ATTN: AFXOKS

Deputy Chief of Staff for Ops, Plans & Readiness/XOX
ATTN: AFXOXFD

Electronic Systems Div/SCT-2
ATTN: SCT-2, J. Clark

Electronic Systems Div/OCT-4
ATTN: OCT-4, J. Deas

Electronic Systems Div/YS
ATTN: YSEA
ATTN: YSM, J. Kobelski

Foreign Technology Div
ATTN: TQTD, B. Ballard
ATTN: NIIS Library

Rome Air Development Center
ATTN: OSC, V. Coyne
ATTN: TSLD

Rome Air Development Center
ATTN: EEP

Space Div
ATTN: YGJB, W. Mercer
ATTN: YKM, CPT Norton
ATTN: YKM, MAJ Alexander

Strategic Air Command
ATTN: XPFS
ATTN: DCXT, T. Jorgensen
ATTN: NRT
ATTN: DCX

OTHER GOVERNMENT AGENCIES

Central Intelligence Agency
ATTN: OSWR/SSD for K. Feuerpfetl

Department of Commerce
National Bureau of Standards
ATTN: Sec Ofc for R. Moore

OTHER GOVERNMENT AGENCIES (Continued)

Department of Commerce
National Oceanic & Atmospheric Admin
ATTN: R. Grubb

Institute for Telecommunications Sciences
National Telecommunications & Info Admin
ATTN: A. Jean
ATTN: L. Berry
ATTN: W. Utlaut

DEPARTMENT OF ENERGY CONTRACTORS

EG&G, Inc
Los Alamos Div
ATTN: J. Colvin
ATTN: D. Wright

University of California
Lawrence Livermore National Lab
ATTN: Tech Info Dept Library

Los Alamos National Lab
ATTN: P. Keaton
ATTN: W. Westervelt

Sandia National Lab
ATTN: ORG 1250, W. Brown
ATTN: Space Project Div
ATTN: 3141
ATTN: D. Thornbrough
ATTN: D. Dahlgren

Sandia National Labs, Livermore
ATTN: B. Murphey
ATTN: T. Cook

DEPARTMENT OF DEFENSE CONTRACTORS

Aerospace Corp
ATTN: I. Garfunkel
ATTN: V. Josephson
ATTN: J. Straus
ATTN: D. Olsen
ATTN: R. Slaughter
ATTN: T. Salmi

Analytical Systems Engineering Corp
ATTN: Radio Sciences

Analytical Systems Engineering Corp
ATTN: Security

BDM Corp
ATTN: L. Jacobs
ATTN: T. Neighbors

Berkeley Research Associates, Inc
ATTN: S. Brecht
ATTN: J. Workman

Boeing Co
ATTN: G. Hall
ATTN: S. Tashird

Booz-Allen & Hamilton, Inc
ATTN: B. Wilkinson

BR Communications
ATTN: J. McLaughlin

DEPARTMENT OF DEFENSE CONTRACTORS (Continued)

University of California at San Diego
ATTN: H. Booker

Charles Stark Draper Lab, Inc
ATTN: D. Cox
ATTN: A. Tetewski
ATTN: J. Gilmore

Computer Sciences Corp
ATTN: F. Eisenbarth

E-Systems, Inc
ATTN: R. Berezdivin

Electrospace Systems, Inc
ATTN: H. Logston

ESL, Inc
ATTN: J. Marshall

General Electric Co
ATTN: A. Harcar
ATTN: A. Steinmayer
ATTN: C. Zierdt

General Electric Co
ATTN: F. Reibert

General Electric Co
ATTN: G. Millman

Horizons Technology, Inc
ATTN: R. Kruger

HSS, Inc
ATTN: D. Hansen

IBM Corp
ATTN: H. Ulander

Instutute for Defense Analyses
ATTN: J. Aein
ATTN: H. Wolfhard
ATTN: E. Bauer

International Tel & Telegraph Corp
ATTN: Tech Library

International Tel & Telegraph Corp
ATTN: W. Rice

JAYCOR
ATTN: J. Sperling

JAYCOR
ATTN: J. Doncarlos

Johns Hopkins University
ATTN: J. Newland
ATTN: T. Evans
ATTN: P. Komiske
ATTN: J. Phillips

Kaman Sciences Corp
ATTN: T. Stephens

Kaman Tempo
ATTN: DASIAC
ATTN: W. Knapp

DEPARTMENT OF DEFENSE CONTRACTORS (Continued)

Linkabit Corp
ATTN: A. Viterbi
ATTN: I. Jacobs
ATTN: H. Van Trees

Litton Systems, Inc
ATTN: B. Zimmer

Lockheed Missiles & Space Co, Inc
ATTN: J. Kumer
ATTN: R. Sears

Lockheed Missiles & Space Co, Inc
ATTN: D. Churchill, Dept 81-11
ATTN: Dept 60-12
ATTN: C. Old, Dept 68-21

MIT Lincoln Lab
ATTN: D. Towle

Magnavox Govt & Indus Electronics Co
ATTN: G. White

McDonnell Douglas Corp
ATTN: H. Spitzer
ATTN: W. Olson

Meteor Communications Corp
ATTN: R. Leader

Mission Research Corp
ATTN: S. Gutsche
ATTN: F. Guigliano
ATTN: R. Hendrick
ATTN: R. Bogusch
ATTN: F. Fajen
ATTN: Tech Library

Mitre Corp
ATTN: C. Callahan
ATTN: B. Adams
ATTN: G. Harding
ATTN: A. Kymmel

Mitre Corp
ATTN: W. Hall
ATTN: W. Foster
ATTN: M. Horrocks

Pacific-Sierra Research Corp
ATTN: H. Brode, Chairman SAGE
ATTN: F. Thomas
ATTN: E. Field, Jr

Pennsylvania State University
ATTN: Ionospheric Res Lab

Photometrics, Inc
ATTN: I. Kofsky

Physical Dynamics, Inc
ATTN: E. Fremouw

R&D Associates
ATTN: B. Yoon

Rand Corp
ATTN: E. Bedrozian
ATTN: C. Crain

DEPARTMENT OF DEFENSE CONTRACTORS (Continued)

R&D Associates
ATTN: H. Ory
ATTN: W. Wright
ATTN: W. Karzas
ATTN: F. Gilmore
ATTN: C. Greifinger
ATTN: R. Lelevier
ATTN: B. Gabbard
ATTN: M. Gantsweg
ATTN: R. Turco
ATTN: P. Haas

Riverside Research Institute
ATTN: V. Trapani

Rockwell International Corp
ATTN: R. Buckner

Rockwell International Corp
ATTN: S. Quilici

Santa Fe Corp
ATTN: D. Paolucci

Science Applications, Inc
ATTN: E. Straker
ATTN: D. Hamlin
ATTN: L. Linson
ATTN: C. Smith

Science Applications, Inc
ATTN: SZ

SRI International
ATTN: W. Jaye
ATTN: M. Baron
ATTN: D. Neilson
ATTN: C. Rino
ATTN: J. Petrickes
ATTN: R. Livingston
ATTN: R. Tsunoda
ATTN: R. Leadabrand
ATTN: W. Chesnut
ATTN: G. Price
ATTN: A. Burns
4 cy ATTN: G. Smith
4 cy ATTN: N. Chang
4 cy ATTN: J. Ames

Stewart Radiance Lab
ATTN: J. Ulwich

Sylvania Systems Group
GTE Products Corp
ATTN: R. Steinhoff

Sylvania Systems Group
GTE Products Corp
ATTN: I. Kohlberg

Tri-Com, Inc
ATTN: D. Murray

TRW Electronics & Defense Sector
ATTN: R. Plebuch
ATTN: D. Dee

DEPARTMENT OF DEFENSE CONTRACTORS (Continued)

Utah State University
ATTN: Sec Con Ofc for A. Steed
ATTN: Sec Con Ofc for D. Burt
ATTN: Sec Con Ofc for K. Baker, Dir Atmos & Sp Sci
ATTN: Sec Con Ofc for L. Jensen, Elec Eng Dept

DEPARTMENT OF DEFENSE CONTRACTORS (Continued)

Visidyne, Inc
ATTN: J. Carpenter
ATTN: W. Reidy
ATTN: O. Shepard

END

DATE
FILMED

3—83

DTIC