AD A122021

Reproduced From
Best Available Copy

(2)

Final
Copy No. 1

Universal Report No. ———	Originator's Report No. MRC-R-699 Revision ———

REPORT OF TEST ON LIGHTING SYSTEMS AND ARTIFICIAL GROUND COVER

TEST PERFORMED BY:

Mission Research Corporation

TEST AUTHORIZED BY:

DAAK70-81-C-0024
Contract No.

"The views, opinions, and/or findings contained in this report are those of the author(s) and should not be construed as an official Department of the Army position, policy, or decision, unless so designated by other documentation."

Prepared for:

Commander
U.S. Army Mobility Equipment Research
and Development Command
ATTN: DRDME-XI
Fort Belvoir, VA 22060

Prepared by:

MISSION RESEARCH CORPORATION
735 State Street, P.O. Drawer 719
Santa Barbara, California 93102

DTIC
DEC 2 1982
A

DTIC FILE COPY

This has been approved for public release and sale; its distribution is unlimited.

82 12 02 015

Universal Report No. _____	Originator's Report No. MRC-R-699 Revision _____

REPORT OF TEST ON LIGHTING SYSTEMS AND ARTIFICIAL GROUND COVER

TEST PERFORMED BY:

Mission Research Corporation

DAAK70-81-C-0024
Contract No.

	Date	Signature	
Test Initiated	11/30/81	R C Vann	
Test Completed	12/16/81	R C Vann	
Report Written By	4/23/82	R C Vann	
Technician			
Test Engineer		R C Vann	
Supervisor	4/23/82	Roy W Hendrix Jr	
Supervisor			
Government Repr. (if applicable)			
Final Release			

TABLE OF CONTENTS

		Page
1.	PURPOSE OF THE TEST	1
2.	DESCRIPTION OF THE TEST	1
3.	CORRECTIONS AND RECOMMENDATIONS	2
4.	DESCRIPTION OF TEST APPARATUS	2
5.	RESULTS OF THE TEST	3
6.	TEST DATA	7
	REFERENCES	8

LIST OF ILLUSTRATIONS

Figure		Page
1	Information flow for test coordination.	4
2	(a) Intruder Monitor Panel, and (b) Observer Monitor Panel.	5
3	Control panel wiring diagram.	6
4	Tungsten iodide lamp.	7

Accession For
NTIS GRA&I
DTIC TAB
Unannounced
Justification
Distribution/
Availability Codes
Avail and/or
Dist Special
A

1. PURPOSE OF THE TEST

As part of its work under Contract Number DAAK70-81-C-0024 with the U.S. Army Mobility Equipment Research and Development Command (MERADCOM), Mission Research Corporation (MRC) developed several concepts for lighting and ground cover configurations with potential for improving performance of guards at the perimeter of high security installations. The purpose of the tests was to demonstrate improvement, or lack of improvement, while using selected configurations. Candidate configurations and those selected for test are described in detail in Reference 1.

The tests were conducted at MERADCOM's Test Range 1 during December 1981. At the conclusion of testing, the lights, ground cover, and test control equipment were left at Test Range 1.

2. DESCRIPTION OF THE TESTS

Tests consisted of running and crawling simulated intrusions outside the outer fence of the double fence test site. The tests were conducted at night. Intrusions were made at distances of 700, 800, and 900 feet from the observation tower. A closed circuit television camera was located 180 feet from the nearest intrusion point so that intrusions were 180, 280, and 380 feet from the camera. The TV display was placed in a location separate from the tower observer. Procedures and test layout are shown in Reference 1, Section 9, and in Reference 2.

The lighting/ground cover configurations tested were:

Standard Lighting/Natural Grass
Standard Lighting/Crushed Rock
Tungsten Iodide Spotlights/Natural Grass
Tungsten Iodide Spotlights/Discrete Retroreflectors.

Standard lighting with natural grass ground cover was used as a basis for comparison of other lighting/ground cover configurations.

3. CORRECTIONS AND RECOMMENDATIONS

Visual barriers were erected at the ranges where intrusions were to be made so that intruders could move from one range to another without being visible to the observers. It became difficult to maintain the barriers during high winds. The observers were instructed to turn away from the test zone and TV screen after reporting an intruder. They turned back to the zone when given an alarm signal. During tests with standard lighting/natural grass and standard lighting/crushed rock observers turned away from the test zone whether the barriers were in place or not.

Weather reports from two nearby airports were recorded in late afternoon before testing but were not particularly useful. A photometer was available to measure luminance of the test zone. Use of the photometer and a single standard light source at the far end of the test zone would have made relative measurement of light transmission possible.

The observers and intruders were hired from a commercial guard service. All had military service within the past 5 years. The observers were asked if they had 20/20 uncorrected vision. Both replied that they had. (One had been in a Marine air delivery unit, the other a Marine reconnaissance scout.) Upon later testing it was determined that one observer had 20/20 vision, the other 20/30 and 20/25. Although it was originally planned that both observers would have 20/20 vision, the data collected contains results for both. However, it is recommended that observers be tested before testing starts and that verbal reports not be accepted.

4. DESCRIPTION OF TEST APPARATUS

The MRC test team consisted of four people. One of the team was a psychologist who assisted with test planning, indoctrination of intruders and observers, and advised on human factors aspects of testing. The other three rotated positions as intruder monitor, tower observer monitor, and TV observer monitor. The procedure is described in detail in Reference 1, Section 9. Briefly, the intruder monitor, with a pre-prepared intrusion

schedule, instructed the intruders and started each intrusion. When the intrusion was started, an audible alarm signal was given to each observer and a timer was started at each monitor station. When the observer detected the intruder he pressed a button, stopping the timer. The observer then told the monitor what type of intrusion he had seen (run or crawl), and at which range (1, 2, or 3). When the monitor had recorded the time and verification he signalled "Guard Ready" to the intruder monitor panel. When both guard monitors had signalled ready, the intruder monitor could start another intrusion. Information flow among the control panels is shown in Figure 1. The intruder monitor panel and a guard monitor panel with the guard's alarm and detect button box are shown in Figure 2. An interconnection wiring diagram is shown in Figure 3. With the exception of an occasional fuse replacement when the equipment was first turned on, the monitoring and control panels operated without trouble throughout the test period.

The tungsten-iodide lamps were operated from a battery housed inside the tower. The battery was floated across a charger to assure that the battery was fully charged while the lights were being used, as shown in Figure 4.

5. RESULTS OF THE TEST: SUMMATION AND ANALYSIS

Test results are presented in Reference 1, Section 10 where test results are shown graphically. In each case the top of the bar is the mean probability of detection, i.e., number of detections/number of trials. The bottom of the bar is the lower 90 percent confidence limit. That is, if the tests were repeated a large number of times, the measured probability of detection would be greater than that given by the bottom of the bar in 90 percent of the tests. Results using the tungsten iodide spotlights with natural grass surface were poorer than with the standard HPS lighting and grass at all ranges. Likewise, results using artificial ground cover were, in all cases, better than those using the standard

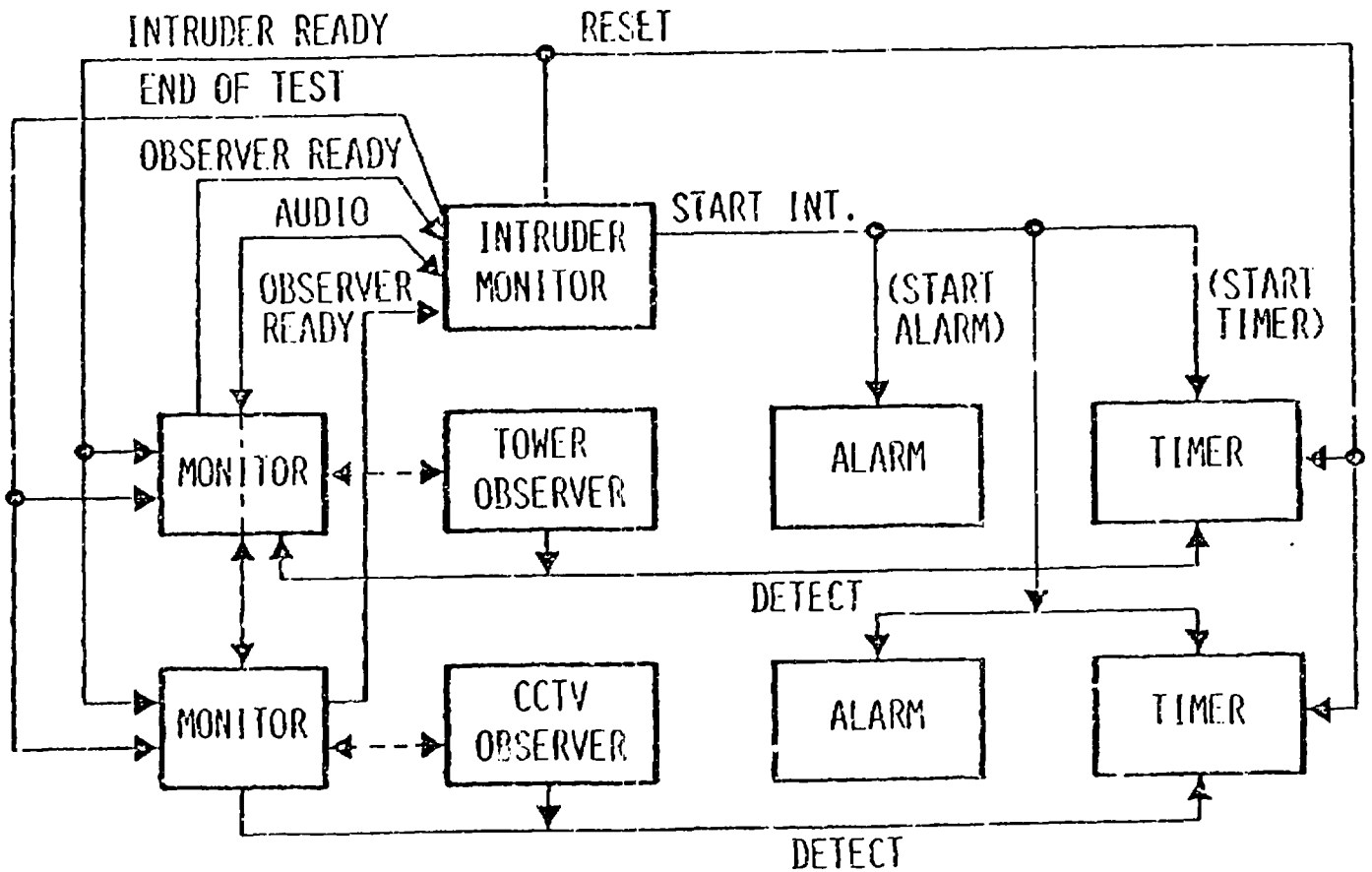

Figure 1. Information flow for test coordination.

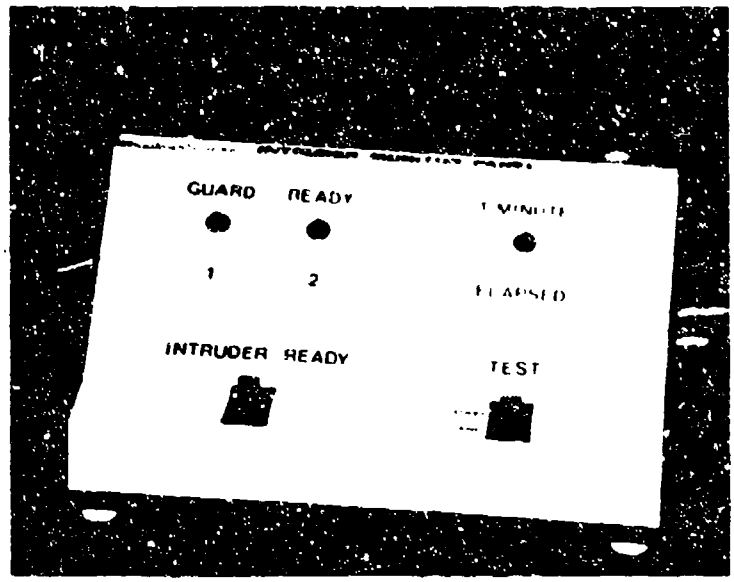

(a)

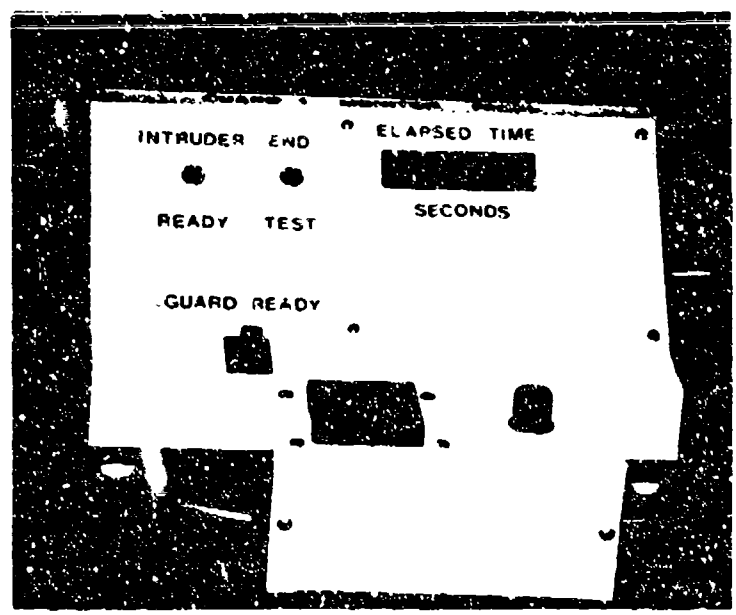

(b)

Figure 2. (a) Intruder Monitor Panel, and (b) Observer Monitor Panel.

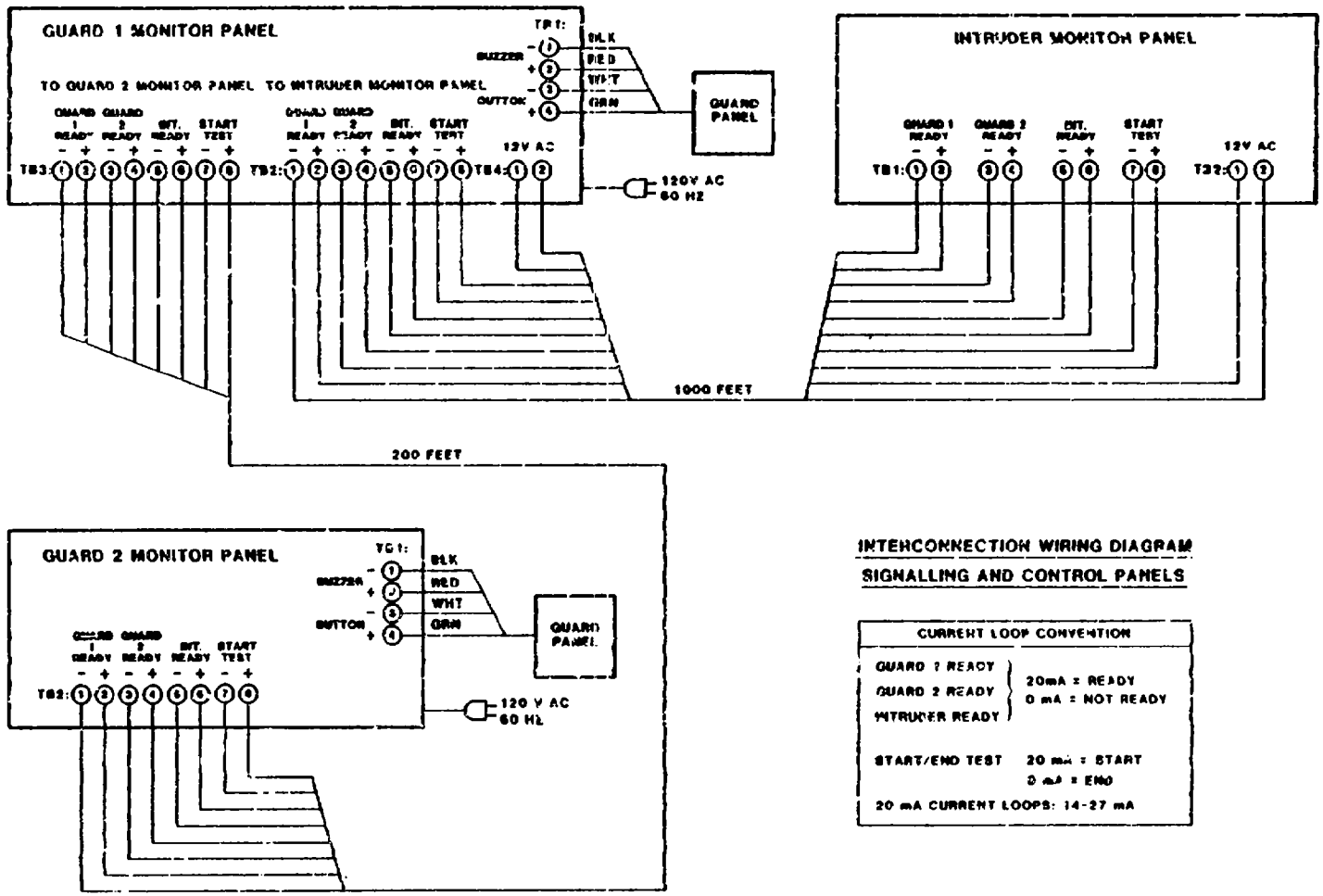

Figure 3. Control panel wiring diagram.

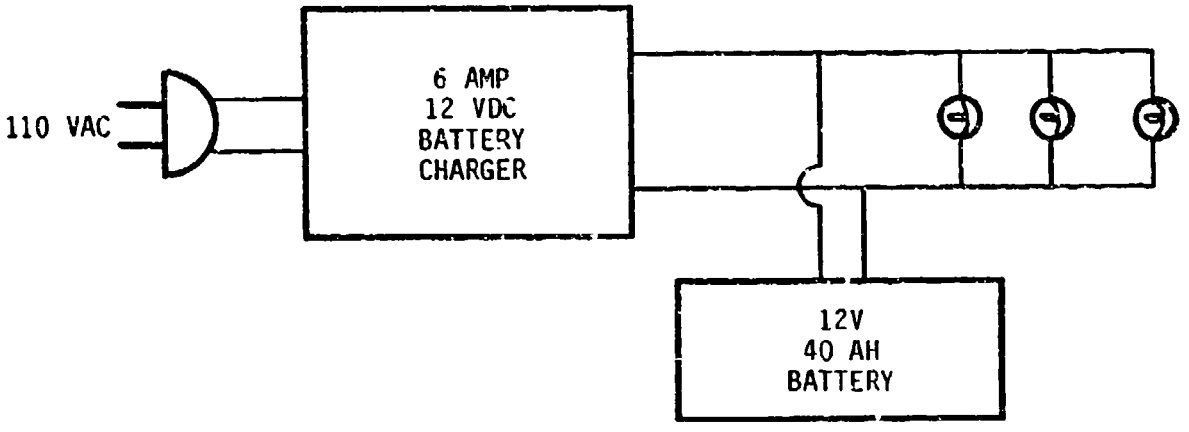

Figure 4. Tungsten iodide lamp.

perimeter configuration. What is not shown is that detection results using CCTV were so near 100 percent that statistical treatment is not useful.

6. TEST DATA

Copies of raw data taken during testing are a part of this report. Since the sheets are not edited, some notes will help to interpret the recorded data.

Each night's testing consisted of 4 shifts. Each shift consisted of 15 false alarms (F), and 5 runs (R) and 5 crawls (C) at each of 3 ranges (1, 2, or 3 corresponding to 700, 800, or 900 feet from the tower).

For each shift there is an intrusion schedule and monitor tally sheets for the tower and TV observers. The observers, Paul and El-Henry (variously identified as El or Ale), are identified on the tally sheets. The monitor filled in detection time and the observers report (VERIFY). Entries in the RESULT column are not uniform but their meaning related to the correctness of the observer's report are clear.

Following the detection data is a listing of the late afternoon weather reports from Washington National Airport and from Dulles International Airport. The reports were obtained by telephone from the Air Weather Service.

Photometer measurements were made using a Photo Research Pritchard Photometer, Model 1980A, provided by MERADCOM.

Data taken on 12/14 were taken in the rain and not included in calculating the results.

REFERENCES

1. Scott, R. C., R. W. Hendrick and T. J. Barrett, Lighting Systems and Artificial Ground Cover (U), Volume I: Summary and Conclusions, Volume II: Technical Report, Volume III: Literature Search Summary, MRC-R-698, Mission Research Corporation, May 1982 (C).

2. Scott, R. C., Plan for Field Test of Selected Lighting and Ground Cover Combinations, MRC-N-481, Mission Research Corporation, November 1981.

MONITOR TALLY SHEET

DATE 11/30 SHIFT _____ STATION _____

INTRUSION SCHEDULE

OBSERVER _____ MONITOR Arms

#	RANGE	TYPE	DETECTION TIME	VERIFY	RESULT
1	2	C			
2		F			
3	1	C			
4	3	R			
5	3	C			
6	2	R			
7	2	C			
8	1	R			
9		F			
10		F			
11	3	R			
12	2	C			
13	1	R			
14	2	C			
15	3	C			
16	1	C			
17	2	R			
18	2	R			
19		F			
20	3	C			
21		F			
22		F			
23	1	C			
24		F			
25	3	C			
26	1	C			
27	2	C			
28		F			
29		F			
30	1	R			
31	1	C			
32		F			
33	3	R			
34		F			
35	2	R			
36		F			
37	1	R			
38	1	R			
39		F			
40		F			
41		F			
42	3	C			
43	2	R			
44	3	R			
45	3	R			

RANGE
1 700 feet
2 800 feet
3 900 feet

TYPE
R Run
C Crawl
F False

NOTES

INTRUSION SCHEDULE

DATE 11/30 SHIFT Test SUPERVISOR T.J.B

TEST CONFIGURATION: Tower ~~Stillwater Hotel/Grass~~

#	RANGE	TYPE	INTRUDER	
1	2	C	3C	2.55
2		F	2W	
3	1	C	1C	6.13
4	3	R	O	—
5	3	C	O	
6	2	R	R3	2.56
7	2	C	C3	2.74
8	1	R	R1	1.88
9		F	OK	
10		F	OK	
11	3	R	O	
12	2	C	C3	3.11
13	1	R	R1	2.23
14	2	C	C3	2.97
15	3	C	O	—
16	1	C	1C	2.49
17	2	R	2R	1.32
18	2	R	2R	1.09
19		F	OK	
~~20~~	~~3~~	~~C~~	~~—~~	
21		F	OK	
22		F	OK	
23	1	C	1C	2.25
24		F	OK	
25	3	C	O	
26	1	C	1C	2.27
27	2	C	2C	2.07
28		F	OK	
29		F	OK	
30	1	R	1R	1.43
31	1	C	1C	2.56
32		F	OK	
33	3	R	O	
34		F	OK	
35	2	R	2R	1.04
36		F	OK	
37	1	R	1R	1.49
38	1	R	1R	1.07
39		F	OK	
40		F	OK	
41		F	OK	
42	3	C	O	
43	2	R	2R	0.99
44	3	R	3R	2.19 not sure
45	3	R	3R	1.79

RANGE
1 700 feet
2 800 feet
3 900 feet

TYPE
R Run
C Crawl
F False

NOTES

MONITOR TALLY SHEET

DATE 11/30 SHIFT Test STATION TV

OBSERVER _____ MONITOR RCS/Donna

#	RANGE	TYPE	DETECTION TIME	VERIFY	RESULT
1	2	C	2.11	+	
2	-	F		+	
3	1	C	3.1	+	
4	3	R	1.5	+	
5	3	C	3.29	+	
6	2	R	1.37	+	
7	2	C	1.34	+	
8	1	R	1.64	+	
9	-	F		+	
10	-	F		+	
11	3	R	1.53	+	
12	2	C	1.13	+	
13	1	R	1.39	+	
14	2	C	1.03	+	
15	3	C	2.38	+	
16	1	C	2.08	+	
17	2	R	1.65	+	
18	2	R	1.36	+	
19	-	F		+	
~~20~~	~~3~~	~~C~~			
21	-	F		+	
22	-	F		+	
23	1	C	2.43	+	
24	-	F		+	
25	3	C	3.50	+	
26	1	C	1.64	+	
27	2	C	1.45	+	
28	-	F		+	
29	-	F		+	
30	1	R	1.49	+	
31	1	C	1.84	+	
32	-	F		+	
33	3	R	1.32	+	
34	-	F		+	
35	2	R	1.07	+	
36	-	F		+	
37	1	R	1.80	+	
38	1	R	1.16	+	
39	-	F		+	
40	-	F		+	
41	-	F		+	
42	3	C	4.07	+	
43	2	R	0.84	+	
44	3	R	0.95	+	
45	3	R	1.17	+	

RANGE
1 700 feet
2 800 feet
3 900 feet

TYPE
R Run
C Crawl
F False

NOTES

- } fringe not near box

INTRUSION SCHEDULE

DATE 2-2-81 SHIFT 1 SUPERVISOR [illegible]

TEST CONFIGURATION: Spots/grass

	#	RANGE	TYPE	INTRUDER
✓	1	2	R	
✓	2	1	R	
✓	3	1	C	
✓	4		F	
✓	5		F	
✓	6	3	R	
✓	7	3	R	
✓	8	1	R	
✓	9		F	
✓	10	2	R	
✓	11		F	
✓	12	3	C	
✓	13	1	R	
✓	14	3	R	
✓	15	3	C	
START ✓	16	~~2~~	~~R~~	
✓	17	2	C	
✓	18	3	C	
✓	19	1	C	
✓	20		F	
✓	21		F	
✓	22	1	R	
✓	23		F	
✓	24	3	C	
✓	25	2	R	
✓	26	2	C	
✓	27		F	
✓	28	1	C	
✓	29	2	C	
✓	30		F	
✓	31	3	C	
✓	32	1	C	
✓	33		F	
✓	34	1	C	
✓	35	2	C	
✓	36	3	R	
✓	37		F	
✓	38	3	R	
✓	39		F	
✓	40	2	C	
✓	41		F	
✓	42	1	R	
✓	43		F	
✓	44	2	~~3~~ R	
✓	45		F	

RANGE
1 700 feet
2 800 feet
3 900 feet

TYPE
R Run
C Crawl
F False

NOTES

~~2R~~
~~3C~~
~~1C~~
~~1R~~
~~FA~~
~~2C~~
~~3R~~
~~FA~~
~~1R~~
~~2C~~

MONITOR TALLY SHEET

DATE 12/2 SHIFT 1 STATION TV

OBSERVER Paul Clemencia MONITOR RGS

#	RANGE	TYPE	DETECTION TIME	VERIFY	RESULT
1	2	R	1.26	2R	
2	1	R	1.81	1R	
3	1	C	3.54	1C	
4	—	F	8.07	F	
5	—	F	8.06	F	
6	3	R	2.12	3R	
7	3	R	2.05	3R	
8	1	R	1.66	1R	
9	—	F	6.49	F	
10	2	R	1.78	2R	
11	—	F	6.64	F	
12	3	C	4.50	3C	
13	1	R	1.34	1R	
14	3	R	1.92	3R	
15	3	C	4.22	3C	
16	2	R	1.68	2R	
17	2	C	~~1.58~~	~~2R~~ 2C	
18	3	C	3.43	3C	
19	1	C	4.57	1C	
20	—	F		F	
21	—	F		F	
22	1	R	1.59	1R	
23	—	F		F	
24	3	C	0	3C	
25	2	R	1.38	2R	
26	2	C	2.63	2C	
27	—	F		F	
28	1	C	4.07	1C	
29	2	C	2.58	2C	
30	—	F		F	
31	3	C	4.05	2C	—
32	1	C	4.37	1C	
33	—	F		F	
34	1	C	5.04	1C	
35	2	C	3.55	2C	
36	3	R	1.84	3R	
37	—	F		F	
38	3	R	1.55	3R	—
39	—	F		F	
40	2	C	3.34	2C	
41	—	F		F	
42	1	R	1.33	1R	
43	—	F		F	
44	2	R	1.36	2R	
45	—	F	7.65	F	

RANGE
1 700 feet
2 800 feet
3 900 feet

TYPE
R Run
C Crawl
F False

Test	Resp
2 C	1R
2R	2R
3 C	3 C
1 C	1 C
1 R	1 R
1 R	1 R
F	F
2C	2C
3 R	3 R
F	F
1R	1R
2C	2C

NOTES

Times on false alarms are times when the decision was made

indecision

MONITOR TALLY SHEET

DATE 12-2 SHIFT 1 STATION Tower

OBSERVER Al MONITOR Jon

#	RANGE	TYPE	DETECTION TIME	VERIFY	RESULT
1	2	R	1.86	+	
2	1	R	2.18	+	
3	1	C	—		
4		F		+	
5		F		+	
6	3	R	2.55	+	
7	3	R	2.50	+	
8	1	R	2.31	—	2R
9		F		+	
10	2	R	2.27	+	
11		F		+	
12	3	C	15.12	+	
13	1	R	2.31	+	
14	3	R	2.69	+	
15	3	C	—		
16	2	R	1.74	+	
17	2	C	—		
18	3	C	—		
19	1	C	—		
20		F		+	
21		F		+	
22	1	R	2.17	+	
23		F		+	
24	3	C	—		
25	2	R	1.75	+	
26	2	C	—		
27		F		+	
28	1	C	13.14	+	
29	2	C	—		
30		F	—		
31	3	C	11.21	+	
32	1	C	—		
33		F		+	
34	1	C	—		
35	2	C	—		
36	3	R	2.47	+	
37		F		+	
38	3	R	2.04	+	
39		F		+	
40	2	C	9.63	+	
41		F		+	
42	1	R	2.16	+	
43		F		+	
44	2	R	1.92	+	
45		F		+	

RANGE
1 700 feet
2 800 feet
3 900 feet

TYPE
R Run
C Crawl
F False

NOTES

INTRUSION SCHEDULE

DATE 12-2-81 SHIFT 2 SUPERVISOR Tom

TEST CONFIGURATION: Spots/grass

#	RANGE	TYPE	INTRUDER
1	1	C	✓
2	2	C	✓
3	2	C	✓
4	3	C	✓
5		F	✓
6	1	C	✓
7		F	✓
8	2	R	✓
9	2	R	✓
10	2	R	✓
11	1	C	✓
12	3	R	✓
13	1	C	✓
14		F	✓
15	1	R	✓
16	3	R	✓
17	1	R	✓
18		F	✓
19		F	✓
20		F	✓
21		F	✓
22	3	C	✓
23	2	C	✓
24		F	✓
25	1	R	✓
26	3	C	✓
27	2	C	✓
28	1	R	✓
29	2	R	✓
30		F	✓
31		F	✓
32	2	R	✓
33	3	R	✓
34	3	C	✓
35		F	✓
36	3	C	✓
37		F	✓
38		F	✓
39	1	C	✓
40	2	C	✓
41	1	R	✓
42	3	R	✓
43		F	✓
44	3	R	✓
45		F	✓

RANGE
1 700 feet
2 800 feet
3 900 feet

TYPE
R Run
C Crawl
F False

NOTES

MONITOR TALLY SHEET

DATE 12/2/81 SHIFT 2 STATION Tower

OBSERVER Paul MONITOR RMA

#	RANGE	TYPE	DETECTION TIME	VERIFY	RESULT
1	1	C	—	0	
2	2	C	—	0	
3	2	C	—	0	
4	3	C	—	0	
5		F	—	F	
6	1	C	10.05	0	2C
7		F	—	F	
8	2	R	—	0	
9	2	R	2.54	2R	
10	2	R	—	0	
11	1	C	—	0	
12	3	R	—	0	
13	1	C	—	0	
14		F	5.80	0	2R
15	1	R	—	0	
16	3	R	—	0	
17	1	R	—	0	
18		F		F	
19		F	—	F	
20		F	—	F	
21		F	—	F	
22	3	C	—	0	
23	2	C	—	0	
24		F	15.20	0	2C
25	1	R	—	0	
26	3	C	5.57	0	2R
27	2	C	—	0	
28	1	R	—	0	
29	2	R	—	0	
30		F	—	F	
31		F	—	F	
32	2	R	—	0	
33	3	R	3.39	3R	
34	3	C	—	0	
35		F	4.30	0	1R
36	3	C	13.45	0	2R
37		F	15.41	0	1C
38		F	—	F	
39	1	C	—	0	
40	2	C	16.28	0	1C
41	1	R	—	0	
42	3	R	6.34	0	2R
43		F	—	F	
44	3	R	7.14	0	2C
45		F	10.31	0	2C

RANGE
1 700 feet
2 800 feet
3 900 feet

TYPE
R Run
C Crawl
F False

NOTES

1 — F — 0
2 — 2R ? 2.5?
3 = F — 0
4 — F — 0
5 — 1C — 7.52
6 — F — 0
7 — 3C — 7.09
8 — F — 0
9 — ~~2 5.42~~ F — 0
10 — 2R — 5.42

MONITOR TALLY SHEET

DATE 12/2 SHIFT 2 STATION TV

OBSERVER Alc Henry MONITOR SCOTT

#	RANGE	TYPE	DETECTION TIME	VERIFY	RESULT
1	1	C	3.13	1C	+
2	2	C	2.14	2C	+
3	2	C	3.06	2C	+
4	3	C	3.70	3C	+
5	--	F	15.9	F	+
6	1	C	4.68	1C	+
7	–	F	1.43	2R	+
8	2	R	1.37	2R	+
9	2	R	0.83	2R	+
10	2	R	4.71	1C	+
11	1	C	my error		
12	3	R	1.19	3R	+
13	1	C	7.69	1C	+
14	–	F		F	+
15	1	R	1.65	1R	+
16	3	R	2.24	3R	+
17	1	R	1.53	1R	+
18	–	F	14.89	F	+
19	–	F	13.94	F	+
20	–	F	20.6	F	+
21	–	F		F	+
22	3	C	5.82	3C	+
23	2	C	4.69	2C	+
24	–	F	19.22	F	+
25	1	R	1.48	1R	+
26	3	C	3.94	3C	+
27	2	C	2.27	2C	+
28	1	R	1.61	1R	+
29	2	R	1.32	2R	+
30	–	F	17.68	F	+
31	–	F	15.58	F	+
32	2	R	1.22	2R	+
33	3	R	1.54	3R	+
34	3	C	3.60	3C	+
35	–	F	13.73	F	+
36	3	C	8.11	3C	+
37	–	F	14.30	F	+
38	–	F	15.53	F	+
39	1	C	4.42	1C	+
40	2	C	2.48	2C	+
41	1	R	1.60	1R	+
42	3	R	1.73	3R	+
43	–	F	14.25	F	+
44	3	R	1.30	3R	+
45	–	F		F	+

start

RANGE
1 700 feet
2 800 feet
3 900 feet

TYPE
R Run
C Crawl
F False

NOTES

Practice	Response	
3C	3C	6.40
2R	2R	1.45
2C	2C	
F	F	7.64
2C	2C	2.21
2R	2R	1.56
1C	1C	8.28
F	F	12.25
3R	3R	1.43
1R	1R	1.07

slow start

INTRUSION SCHEDULE

DATE 12/2 SHIFT 3 SUPERVISOR SCOTT

TEST CONFIGURATION: SPOTS/GRASS

#	RANGE	TYPE	INTRUDER
1	2	C	
2	1	C	
3	1	R	
4		F	
5		F	
6	3	C	
7		F	
8	2	R	
9	1	C	
10	1	R	
11	2	C	
12	2	R	
13		F	
14		F	
15	3	C	
16	3	C	
17	2	C	
18	3	R	
19	3	R	
20	1	C	
21	3	R	
22	3	C	
23		F	
24		F	
25	1	C	
26		F	
27	3	R	
28		F	
29	1	R	
30		F	
31	2	R	
32		F	
33	2	C	
34	2	C	
35	1	R	
36	2	R	
37		F	
38	3	R	
39		F	
40	1	C	
41		F	
42	1	R	
43		F	
44	3	C	
45	2	R	

RANGE
1 700 feet
2 800 feet
3 900 feet

TYPE
R Run
C Crawl
F False

NOTES

MONITOR TALLY SHEET

DATE 12/2/81 SHIFT 3 STATION Tow...

OBSERVER W. Henry MONITOR RMA

#	RANGE	TYPE	DETECTION TIME	VERIFY	RESULT
1	2	C	—	0	0
2	1	C	14.61	1C	+
3	1	R	1.99	1R	+
4		F	—	F	+
5		F	—	F	+
6	3	C	8.91	3C	+
7		F	—	F	+
8	2	R	1.44	2R	+
9	1	C	16.15	1C	+
10	1	R	1.97	1R	+
11	2	C	9.80	2C	+
12	2	R	1.59	2R	+
13		F	—	F	+
14		F	—	F	+
15	3	C	12.73	3C	+
16	3	C	10.86	2C	0
17	2	C	17.17	2C	+
18	3	R	2.12	3R	+
19	3	R	2.22	3R	+
20	1	C	—	0	0
21	3	R	2.26	3R	+
22	3	C	—	0	0
23		F	—	F	+
24		F	12.60	3C	0
25	1	C	14.50	2C	0
26		F	—	F	+
27	3	R	1.82	3R	+
28		F	—	F	+
29	1	R	3.32	1R	+
30		F	—	F	+
31	2	R	1.79	2R	+
32		F	—	F	+
33	2	C	5.34	2C	+
34	2	C	—	0	0
35	1	R	2.65	1R	+
36	2	R	1.56	2R	+
37		F	—	F	+
38	3	R	1.89	3R	+
39		F	—	F	+
40	1	C	14.12	1C	+
41		F	—	F	+
42	1	R	1.44	1R	+
43		F	—	F	+
44	3	C	16.96	3C	+
45	2	R	1.69	2R	+

shift

RANGE
1 700 feet
2 800 feet
3 900 feet

TYPE
R Run
C Crawl
F False

NOTES

Looks more like 1 C

General Comment:
If he does not look down lights & stands off to side away from light path, he can detect better

MONITOR TALLY SHEET

DATE 12-2-81 SHIFT 3 STATION CCTV

OBSERVER Paul MONITOR Tom

#	RANGE	TYPE	DETECTION TIME	VERIFY	RESULT	
1	2	C	2.19	+	2C	
2	1	C	4.55	+	1C	
3	1	R	1.52	+	1R	
4		F		+		
5		F		+		
6	3	C	8.43	+	3C	
7		F		+		
8	2	R	1.03	+	2R	
9	1	C	5.28	+	1C	
10	1	R	1.42	+	1R	
11	2	C	2.71	+	2C	
12	2	R	1.07	+	2R	
13		F		+		
14		F		+		
15	3	C	4.25	+	3C	
16	3	C	4.33	+	3C	
17	2	C	2.35	+	2C	
18	3	R	1.72	+	3R	
19	3	R	2.22	+	3R	
20	1	C	7.84	+	1C	
21	3	R	2.04	+	3R	
22	3	C	6.20	+	3C	
23		F		+		
24		F		+		
25	1	C	5.32	+	1C	
26		F		+		
27	3	R	1.70	+	3R	
28		F		+		
29	1	R	2.08	+	1R	
30		F		+		
31	2	R	1.54	+	2R	
32		F		+		
33	2	C	2.80	+	2C	
34	2	C	2.97	+	2C	
35	1	R	2.27	+	1R	
36	2	R	1.34	+	2R	
37		F		+		
38	3	R	1.59	+	3R	
39		F		+		
40	1	C	4.32	+	1C	
41		F		+		
42	1	R	2.06	+	1R	
43		F		+		
44	3	C	3.82	+	3C	
45	2	R	1.63	+	2R	

RANGE
1 700 feet
2 800 feet
3 900 feet

TYPE
R Run
C Crawl
F False

NOTES

8.99
10.50 ← Intruder got hung up.
12.82
9.63
11.23
22.71
16.76
13.76
15.50
12.00
10.52
9.97
10.08
9.96
10.01

INTRUSION SCHEDULE

DATE 12-2-81 SHIFT 4 SUPERVISOR Tom

TEST CONFIGURATION: Spots/grass

#	RANGE	TYPE	INTRUDER	
1	2	R	✓	
2	2	C	✓	
3	2	R	✓	
4	1	R	✓	
5	2	R	✓	
6	3	R	✓	
7	2	C	✓	
8	1	R	✓	
9		F	✓	
10	1	R	✓	
11	3	C	✓	
12	2	R	✓	
13	3	C	✓	
14		F	✓	
15	1	R	✓	
16	2	C	✓	
17	3	R	✓	
18		F	✓	
19	1	R	✓	
20	1	C	✓	
21	3	C	✓	
22	3	C	✓	
23		F	✓	
24		F	✓	
25	2	C	✓	
26		F	✓	
27		F	✓	
28	1	C	✓	C
29	2	C	✓	J
30	2	R	✓	
31	1	C	✓	
32		F	✓	
33		F	✓	
34	3	R	✓	
35		F	✓	
36	3	C	✓	
37		F	✓	
38	1	C	✓	
39		F	✓	
40		F	✓	
41	3	R	✓	
42	1	C	✓	
43		F	✓	
44	3	R	✓	
45		F	✓	

RANGE
1 700 feet
2 800 feet
3 900 feet

TYPE
R Run
C Crawl
F False

NOTES

MONITOR TALLY SHEET

DATE 12/2/81 SHIFT 4 STATION CCTV

OBSERVER El Henry MONITOR RMA

#	RANGE	TYPE	DETECTION TIME	VERIFY	RESULT
1	2	R	0.88	2R	+
2	2	C	1.44	2C	+
3	2	R	1.05	2R	+
4	1	R	1.48	1R	+
5	2	R	0.88	2R	+
6	3	R	0.91	3R	+
7	2	C	2.43	2C	+
8	1	R	1.17	1R	+
9		F	14.10	F	+
10	1	R	1.84	1R	+
11	3	C	2.47	3C	+
12	2	R	1.42	2R	+
13	3	C	1.88	3C	+
14		F	11.29	F	+
15	1	R	1.46	1R	+
16	2	C	1.35	2C	+
17	3	R	1.12	3R	+
18		F	13.16	F	+
19	1	R	0.89	1R	+
20	1	C	4.86	1C	+
21	3	C	1.68	3C	+
22	3	C	4.58	3C	+
23		F	18.20	F	+
24		F	23.29	F	+
25	2	C	2.68	2C	+
26		F	19.28	F	+
27		F	18.20	F	+
28	1	C	7.36	1C	+
29	2	C	1.91	2C	+
30	2	R	1.22	2R	+
31	1	C	4.67	1C	+
32		F	20.65	F	+
33		F	21.63	F	+
34	3	R	1.40	3R	+
35		F	20.39	F	+
36	3	C	1.88	3C	+
37		F	24.58	F	+
38	1	C	4.56	1C	+
39		F	24.74	F	+
40		F	22.74	F	+
41	3	R	1.09	3R	+
42	1	C	4.85	1C	+
43		F	-	0	0
44	3	R	1.09	3R	+
45		F	16.28	F	+

called 1 foot →

Start

RANGE
1 700 feet
2 800 feet
3 900 feet

TYPE
← R Run Zeroed out ?
C Crawl
F False

NOTES

MONITOR TALLY SHEET

DATE 12/2 SHIFT 4 STATION Tower

OBSERVER Paul MONITOR SCOTT

#	RANGE	TYPE	DETECTION TIME	VERIFY	RESULT
1	2	R	—	—	—
2	2	C	16.37	3C	—
3	2	R	—	—	—
4	1	R	2.81	1R	+
5	2	R	1.7	2R	+
6	3	R	—	—	—
7	2	C	—	—	—
8	1	R	2.90	2R	—
9	—	F	20.10	2C	—
10	1	R	—	—	—
11	3	C	27.17	2C	—
12	2	R	—	—	—
13	3	C	13.16	2C	—
14	—	F		F	—
15	1	R	2.92	1R	+
16	2	C	8.45	1C	—
17	3	R	—	—	—
18	—	F		F	+
19	1	R	—	—	—
20	1	C	14.6	2C	—
21	3	C	—	—	—
22	3	C	—	—	—
23	—	F	16.04	1C	—
24	—	F	—	F	—
25	2	C	—	—	—
26	—	F	12.02	3C	—
27	—	F		F	+
28	1	C	—	—	—
29	2	C	16.90	1C	—
30	2	R	—	—	—
31	1	C	—	—	—
32	—	F	—	F	+
33	—	F		F	+
34	3	R	3.23	1R	—
35	—	F		F	+
36	3	C	13.6	2C	—
37	—	F		F	+
38	1	C	18.40	3C	—
39	—	F		F	+
40	—	F		F	+
41	3	R	—	—	—
42	1	C	—	—	—
43	—	F	12.15	2R	—
44	3	R	—	—	—
45	—	F	—	F	+

RANGE
1 700 feet
2 800 feet
3 900 feet

standing back from the window

TYPE
R Run
C Crawl
F False

NOTES

saw him coming back

INTRUSION SCHEDULE

DATE 12/3 SHIFT 1 SUPERVISOR

TEST CONFIGURATION: SPOTS/GRASS

#	RANGE	TYPE	INTRUDER
1	3	C	✓
2	1	R	✓
3	2	R	✓
4	3	R	✓
5		F	✓
6		F	✓
7	2	R	✓
8	3	R	✓
9	1	R	✓
10	1	C	✓
11		F	✓
12	3	C	✓
13	2	C	✓
14	3	R	✓
15		F	✓
16	3	R	✓
17		F	✓
18	1	C	✓
19		F	✓
20	3	R	✓
21	2	C	✓
22	1	R	✓
23		F	✓
24	1	R	✓
25		F	✓
26	2	C	✓
27		F	✓
28	2	R	✓
29	2	C	✓
30	3	C	✓
31		F	✓
32	1	C	✓
33	1	R	✓
34		F	✓
35	1	C	✓
36		F	✓
37		F	✓
38	2	R	✓
39	1	C	✓
40		F	✓
41	2	R	✓
42		F	✓
43	2	C	✓
44	3	C	✓
45	3	C	✓

RANGE
1 700 feet
2 800 feet
3 900 feet

TYPE
R Run
C Crawl
F False

NOTES
2 C ✓
F ✓
1 R ✓
1 C ✓
3 C ✓
2 R ✓
3 R ✓
F ✓
1 R ✓
2 C ✓

MONITOR TALLY SHEET

DATE 12-3-81 SHIFT 1 STATION Tower

OBSERVER Paul C MONITOR Donna

#	RANGE	TYPE	DETECTION TIME	VERIFY	RESULT
1	3	C	~~[illegible]~~	~~[illegible]~~	+
2	1	R	~~[illegible]~~	~~[illegible]~~	+
3	2	R			—
4	3	R	21.44	1C	—
5		F			+
6		F	4.36	R2	—
7	2	R	—		—
8	3	R	—		—
9	1	R	2.20	1R	+
10	1	C	15.37	C2	
11		F			+
12	3	C	—		—
13	2	C	4.44	3R	—
14	3	R	15.29	2C	—
15		F			+
16	3	R			—
17		F			+
18	1	C			—
19		F	21.77	3C	—
20	3	R			—
21	2	C	16.80		+
22	1	R	2.19		+
23		F	4.05	2R	—
24	1	R	2.77		+
25		F			+
26	2	C	13.63	1C	—
27		F			+
28	2	R	2.29		+
29	2	C			—
30	3	C	22.04		+
31		F	9.46	2C	—
32	1	C	21.57	2C	—
33	1	R	1.59		+
34		F			+
35	1	C	21.48	2C	*
36		F	21.12	2C	—
37		F			+
38	2	R			—
39	1	C			—
40		F			+
41	2	R	2.40		+
42		F			+
43	2	C	12.78		+
44	3	C	13.26	2C	—
45	3	C			—

21.76
2.65

RANGE
1 700 feet
2 800 feet
3 900 feet

TYPE
R Run
C Crawl
F False

NOTES

!

✓ 2C 11.72 T
✓ F 11.37 C2
✓ 1R 12.57 C3
✓ 1C —
✓ 3C 21.33 2C
✓ 2R 12.24 C
✓ 3R —
✓ F —
✓ 1R 3.68 1R+
✓ 2C —

decides at fence where it seems closer to two

I think he does see 1C well but not 2C very well

(Strategies for accounting can explain training sensitivity could well account for difference in observers)

MONITOR TALLY SHEET

DATE 12/3/81 SHIFT 1 STATION CCTV

OBSERVER El Henry MONITOR RmA

Start - 18:16
end - 19:00

#	RANGE	TYPE	DETECTION TIME	VERIFY	RESULT
1	3	C	5.15	3C	+
2	1	R	1.25	1R	+
3	2	R	0.67	2R	+
4	3	R	1.52	3R	+
5	-	F	22.67	F	+
start → 6	-	F	17.37	F	+
7	2	R	1.06	2R	+
8	3	R	1.21	3R	+
9	1	R	1.55	1R	+
10	1	C	3.80	1C	+
11	-	F	16.83	F	+
12	3	C	6.12	3C	+
13	2	C	2.40	2C	+
14	3	R	1.30	3R	+
15	-	F	21.12	F	+
16	3	R	1.49	3R	+
pust 45 seconds 17	-	F	0	0	0
18	1	C	5.34	1C	+
19	-	F	16.51	F	+
20	3	R	1.29	3R	+
21	2	C	9.21	2C	+
22	1	R	1.42	1R	+
23	-	F	17.13	F	+
24	1	R	1.46	1R	+
25	-	F	18.24	F	+
26	2	C	1.87	2C	+
27	-	F	13.51	F	+
28	2	R	1.46	2R	+
29	2	C	1.77	2C	+
30	3	C	6.16	3C	+
31	-	F	18.78	F	+
32	1	C	5.41	1C	+
33	1	R	1.70	1R	+
34	-	F	19.40	F	+
35	1	C	5.93	1C	+
36	-	F	19.06	F	+
37	-	F	18.00	F	+
38	2	R	1.20	2R	+
39	1	C	5.46	1C	+
40	-	F	-	0	0
41	2	R	1.07	2R	+
42	-	F	16.21	F	+
43	2	C	1.61	2C	+
44	3	C	3.69	3C	+
45	3	C	3.58	3C	+

RANGE
1 700 feet
2 800 feet
3 900 feet

TYPE
R Run
C Crawl
F False

NOTES
2C - 1.79 - 2C - +
F - 10.74 - F - +
1R - 1.26 - 1R - +
1C - 4.96 - 1C - +
3C - 2.56 - 3C - +
2R - 1.20 - 2R - +
3R - 1.20 - 3R - +
F - 12.05 - F - +
1R - 2.35 - 1R - +
2C - 1.41 - 2C - +

Some crawls start ~ 2 sec 4 seconds after buzzer starts.

INTRUSION SCHEDULE

DATE 12/3/81 SHIFT 2 SUPERVISOR RMH

TEST CONFIGURATION: Spots/grass

#	RANGE	TYPE	INTRUDER
1	3	C	✓
2	–	F	✓
3	1	C	✓
4	2	C	✓
5	2	R	✓
6	–	F	✓
7	3	R	✓
8	–	F	✓
9	2	C	✓
10	3	C	✓
11	2	R	✓
12	1	R	✓
13	3	R	✓
14	3	C	✓
15	–	F	✓
16	1	R	✓
17	1	C	✓
18	2	C	✓
19	3	R	✓
20	3	C	✓
21	2	C	✓
22	1	C	✓
23	–	F	✓
24	–	F	✓
25	2	C	✓
26	–	F	✓
27	–	F	✓
28	2	R	✓
29	1	C	✓
30	1	R	✓
31	3	R	✓
32	–	F	✓
33	1	R	✓
34	–	F	✓
35	3	R	✓
36	2	R	✓
37	1	C	✓
38	1	R	✓
39	–	F	✓
40	3	C	✓
41	–	F	✓
42	2	R	✓
43	–	F	✓
44	–	F	✓
45	–	F	✓

start

RANGE
1 700 feet
2 800 feet
3 900 feet

TYPE
R Run
C Crawl
F False

NOTES
~~2 C~~
~~1 R~~
~~F~~
~~3 R~~
~~[illegible]~~
~~[illegible]~~
~~[illegible]~~
~~[illegible]~~
~~3 C~~
~~2 R~~

MONITOR TALLY SHEET

DATE 12-3-81 SHIFT 2 STATION Tower

OBSERVER Al El MONITOR Tom

#	RANGE	TYPE	DETECTION TIME	VERIFY	RESULT
1	3	C	—	—	
2		F		+	
3	1	C	16.39	+	1C
4	2	C	7.37	+	2C
5	2	R	1.52	+	2R
6		F		+	
7	3	R	1.51	+	3R
8		F		+	
9	2	C	5.98	+	2C
10	3	C	10.91	+	3C
11	2	R	1.58	+	2R
12	1	R	2.85	+	1R
13	3	R	2.05	+	3R
14	3	C	10.88	+	3C
15		F		+	
16	1	R	1.85	+	1R
17	1	C	7.26	+	1C
18	2	C	12.48	+	2C
19	3	R	1.65	+	3R
20	3	C	—	—	
21	2	C	19.42	+	2C
22	1	C	7.99	+	1C
23		F		+	
24		F		+	
25	2	C	12.87	+	2C
26		F		+	
27		F		+	
28	2	R	1.75	+	2R
29	1	C	5.76	+	1C
30	1	R	1.73	—	2R
31	3	R	—	—	
32		F		+	
33	1	R	1.98	+	1R
34		F		+	
35	3	R	2.16	+	3R
36	2	R	1.71	+	2R
37	1	C	13.98	+	1C
38	1	R	1.52	+	1R
39		F		+	
40	3	C	16.31	+	3C
41		F		+	
42	2	R	2.43	+	2R
43		F		+	
44		F		+	
45		F		+	

RANGE
1 700 feet
2 800 feet
3 900 feet

TYPE
R Run
C Crawl
F False

NOTES

2C + 11.56
1R + 1.76
F +
3R + 2.31
2C + 13.82
F +
1R + 1.75
1C + 13.02
3C + 13.51
2R + 1.87

MONITOR TALLY SHEET

DATE 12/3 SHIFT 2 STATION IV

OBSERVER P. Clementsi MONITOR Scott

#	RANGE	TYPE	DETECTION TIME	VERIFY	RESULT
1	3	C	9.65	2C	—
2		F	13.46	F	+
3	1	C	8.54	1C	+
4	2	C	3.20	2C	+
5	2	R	1.29	2R	+
6		F	13.79	F	+
7	3	R	1.37	3R	+
8		F	14.51	F	+
9	2	C	2.39	2C	+
10	3	C	3.02	3C	+
11	2	R	1.48	2R	+
12	1	R	2.05	1R	+
13	3	R	1.40	3R	+
14	3	C	3.56	3C	+
15		F	14.12	F	+
16	1	R	1.58	1R	+
17	1	C	6.29	1C	+
18	2	C	2.38	2C	+
19	3	R	1.31	3R	+
20	3	C	5.24	3C	+
21	2	C	4.67	2C	+
22	1	C	4.73	1C	+
23		F	13.17	F	+
24		F	15.48	F	+
25	2	C	2.63	2C	+
26		F	13.37	F	+
27		F	13.54	F	+
28	2	R	1.45	2R	+
29	1	C	3.96	1C	+
30	1	R	1.83	1R	+
31	3	R	2.22	3R	+
32		F	14.64	F	+
33	1	R	1.77	1R	+
34		F	12.77	F	+
35	3	R	1.54	3R	+
36	2	R	1.42	2R	+
37	1	C	4.12	1C	+
38	1	R	1.52	1R	+
39		F	17.03	F	+
40	3	C	9.46	3C	+
41		F	14.08	F	+
42	2	R	1.47	2R	+
43		F	14.18	F	+
44		F	13.87	F	+
45		F	16.21	F	+

he knew it

1933

RANGE
1 700 feet
2 800 feet
3 900 feet

TYPE
R Run
C Crawl
F False

NOTES

	Obs Response	
2C	2C	5.35
1R	1R	1.80
F	F	9.04
3R	3R	1.73
2C	2C	4.11
F	F	8.16
1R	1R	1.38
1C	1C	8.06
3C	3C	4.13
2R	2R	1.47

Start: 1933
Finish: 2014

INTRUSION SCHEDULE

DATE 12-3-81 SHIFT 3 SUPERVISOR Scott

TEST CONFIGURATION: Spots/grass

#	RANGE	TYPE	INTRUDER/
1		F	
2		F	
3	3	C	
4	3	R	
5	1	C	
6		F	
7	1	R	
8	1	C	
9	3	C	
10	3	C	
11		F	
12		F	
13	3	R	
14		F	
15	3	R	
16	1	C	
17	3	C	
18		F	
19	2	R	
20	1	R	
21		F	
22	2	C	
23		F	
24		F	
25		F	
26	1	R	
27	1	C	
28	1	R	
29		F	
30	1	C	
31		F	
32	1	R	
33	3	R	
34	2	C	
35	3	R	
36	2	R	
37	2	C	
38	2	C	
39	3	C	
40	2	C	
41	2	R	
42		F	
43	2	R	
44		F	
45	2	R	

RANGE
1 700 feet
2 800 feet
3 900 feet

TYPE
R Run
C Crawl
F False

NOTES

MONITOR TALLY SHEET

DATE 12/3 SHIFT 3 STATION Tower

OBSERVER Paul MONITOR RMA

#	RANGE	TYPE	DETECTION TIME	VERIFY	RESULT
1		F	–	F	+
2		F	–	F	+
3	3	C	0	0	0
4	3	R	0	0	0
5	1	C	14.11	2C	0
6		F	–	F	+
7	1	R	2.73	1R	+
8	1	C	0	0	0
9	3	C	0	0	0
10	3	C	0	0	0
11		F	–	F	+
12		F	–	F	+
13	3	R	0	0	0
14		F	16.21	2C	0
15	3	R	0	0	0
16	1	C	21.14	3C	0
17	3	C	0	0	0
18		F	–	F	+
19	2	R	18.58	2C	0
20	1	R	3.00	1R	+
21		F	–	F	+
22	2	C	0	0	0
23		F	19.86	2C	0
24		F	27.49	3C	0
25		F	–	F	+
Start 26	1	R	2.27	1R	+
27	1	C	12.16	1C	+
28	1	R	3.18	1R	+
29		F	23.57	2C	0
30	1	C	0	0	0
31		F	20.41	2C	0
32	1	R	2.58	1R	+
33	3	R	4.28	2R	0
34	2	C	17.76	3C	0
35	3	R	0	0	0
36	2	R	21.39	2C	0
37	2	C	21.90	2C	+
38	2	C	0	0	0
39	3	C	0	0	0
40	2	C	0	0	0
41	2	R	20.29	2C	0
42		F	–	F	+
43	2	R	0	0	0
44		F	21.89	3C	0
45	2	R	0	0	0

RANGE
1 700 feet
2 800 feet
3 900 feet

TYPE
R Run
C Crawl
F False

NOTES
Missing 2C

MONITOR TALLY SHEET

DATE 14/3/81 SHIFT 3 STATION CCTV

OBSERVER Ale MONITOR Jon

START 20:40:31
End 21:28:03

#	RANGE	TYPE	DETECTION TIME	VERIFY	RESULT	
1	–	F	14.13	+		
2	–	F	——	—		
3	3	C	3.23	+	3C	
4	3	R	1.38	+	3R	
5	1	C	4.02	+	1C	
6	--	F	9.25	+		
7	1	R	1.29	+	1R	
8	1	C	5.07	+	1C	
9	3	C	2.22	+	3C	
10	3	C	2.05	+	3C	
11	-	F	12.43	+		
12	–	F	12.69	+		
13	3	R	0.15	+	3R	
14	–	F	10.51	+		
15	3	R	1.52	+	3R	
16	1	C	3.88	+	1C	G
17	3	C	2.78	+	3C	
18	–	F	15.13	+		
19	2	R	0.94	+	2R	
20	1	R	1.76	+ –	3R-1R	– said it wrong, Sorry –
21	–	F	16.86	+		
22	2	C	1.68	+	2C	J
23	–	F	15.23	+		
24	–	F	15.38	+		
25	–	F	15.25	+		
26	1	R	2.11	+	1R	J
27	1	C	4.15	+	1C	
28	1	R	2.39	+	1R	
29	–	F	10.69	+		
30	1	C	5.84	+	1C	G
31		F	15.71	+		
32	1	R	1.56	+	1R	
33	3	R	0.98	+	3R	
34	2	C	2.13	+	2C	
35	3	R	1.09	+	3R	
36	2	R	0.76	+	2R	
37	2	C	1.79	+	2C	
38	2	C	1.69	+	2C	
39	3	C	4.39	+	3C	
40	2	C	1.88	+	2C	J
41	2	R	1.12	+	2R	
42	[illegible]	F	14.31	+		
43	2	R	0.99	+	2R	
44		F	16.73	+		
45	2	R	1.14	+	2R	

RANGE
1 700 feet
2 800 feet
3 900 feet

TYPE
R Run
C Crawl
F False

NOTES

INTRUSION SCHEDULE

DATE 12/3 SHIFT 4 SUPERVISOR [illegible]

TEST CONFIGURATION: Spots/grass

#	RANGE	TYPE	INTRUDER
1	3	R	✓
2	1	C	✓
3		F	✓
4	2	R	✓
5	2	R	✓
6		F	✓
7	1	R	✓
8		F	✓
9	3	C	✓
10	1	R	✓
11		F	✓
12	1	C	✓
13	1	C	✓
14	3	C	✓
15		F	✓
16	1	R	✓
17		F	✓
18	2	C	✓
19	2	C	✓
20	2	C	✓
21	1	C	✓
22		F	✓
23	3	R	✓
24	3	C	✓
25	3	C	✓
26	2	R	✓
27		F	✓
28	1	R	✓
29	2	C	✓
30		F	✓
31	2	R	✓
32	1	R	✓
33	3	R	✓
34		F	✓
35	2	R	✓
36		F	✓
37	2	R	✓
38		F	✓
39		F	✓
40	3	R	✓
41		F	✓
42	3	C	✓
43		F	✓
44	1	C	✓
45	2	C	✓

RANGE
1 700 feet
2 800 feet
3 900 feet

TYPE
R Run
C Crawl
F False

NOTES

MONITOR TALLY SHEET

DATE 12/3/81 SHIFT 4 STATION CCTV

OBSERVER Paul MONITOR RMA

21:45 → 22:20

#	RANGE	TYPE	DETECTION TIME	VERIFY	RESULT
1	3	R	1.11	3R	+
2	1	C	5.86	1C	+
3	–	F	10.14	F	+
4	2	R	1.37	2R	+
5	2	R	1.49	2R	+
6	–	F	9.58	F	+
7	1	R	1.30	1R	+
8	–	F	8.60	F	+
9	3	C	1.91	3C	+
10	1	R	1.83	1R	+
11	–	F	12.11	F	+
12	1	C	4.09	1C	+
13	1	C	3.28	1C	+
14	3	C	6.50	3C	+
15	–	F	11.05	F	+
16	1	R	1.34	1R	+
17	–	F	9.35	F	+
18	2	C	2.31	2C	+
19	2	C	2.73	2C	+
20	2	C	2.45	2C	+
21	1	C	4.95	1C	+
22	–	F	9.42	F	+
23	3	R	1.34	3R	+
24	3	C	2.15	3C	+
25	3	C	5.02	2C	O
26	3	R	1.36	3R	+
27	–	F	11.92	F	+
28	1	R	1.54	1R	+
29	2	C	2.74	2C	+
30	–	F	11.87	F	+
31	2	R	1.13	2R	+
32	1	R	1.17	1R	+
33	3	R	1.21	3R	+
34	–	F	9.72	F	+
35	2	R	0.75	2R	+
36	–	F	10.01	F	+
37	2	R	1.02	2R	+
38	–	F	10.33	F	+
39	–	F	10.15	F	+
40	3	R	1.35	3R	+
41	–	F	10.68	F	+
42	3	C	3.09	3C	+
43	–	F	9.65	F	+
44	1	C	4.56	1C	+
45	2	C	2.24	2C	+

start →

RANGE
1 700 feet
2 800 feet
3 900 feet

TYPE
R Run
C Crawl
F False

NOTES

mistakes, should have called 3C said "blew that one! Range error

MONITOR TALLY SHEET

DATE 12-3-81 SHIFT 4 STATION

OBSERVER E.I. MONITOR Donna

#	RANGE	TYPE	DETECTION TIME	VERIFY	RESULT
1	3	R	1.06		+
2	1	C	5.51		+
3		F			+
4	2	R	.93		+
5	2	R	1.22		+
6		F			+
7	1	R	1.29		+
8		F			+
9	3	C			—
10	1	R	2.06		+
Test 11		F			+
12	1	C	3.01		+
13	1	C	2.25		+
14	3	C	12.16		+
15		F			+
16	1	R	1.66		+
17		F			+
18	2	C	10.20		+
19	2	C	4.71		+
20	2	C	3.86		+
21	1	C	5.49		+
22		F			+
23	3	R	1.64		+
24	3	C			—
25	3	C			—
26	3	R	1.19		+
27		F			+
23	1	R	1.56		+
29	2	C	8.43		+
30		F			+
31	2	R	1.19		+
32	1	R	1.30		+
33	3	R	1.08		+
34		F			+
35	2	R	.95		+
36		F			+
37	2	R	.90		+
38		F			+
39		F	9.09	3C	—
40	3	R	1.67		+
41		F			+
42	3	C			—
43		F			+
44	1	C	3.69		+
45	2	C	14.78		+

RANGE
1 700 feet
2 800 feet
3 900 feet

TYPE
R Run
C Crawl
F False

NOTES

INTRUSION SCHEDULE

DATE 12-4-81 SHIFT 1 SUPERVISOR Arine

TEST CONFIGURATION: Reflectors/spots

#	RANGE	TYPE	INTRUDER	
1	2	R	✓	J
2	3	C	✓	J
3		F	✓	
4		F	✓	
5	1	C	✓	G
6	1	R	✓	R G
7	2	C	✓	J
8		F	✓	
9	1	C	✓	J
10	3	C	✓	G
11	2	C	✓	J
12		F	✓	
13	1	R	✓	G
14	3	R	✓	J
15	1	C	✓	G
16	1	C	✓	G
17	2	C	✓	J
18	1	C	✓	G
19	3	C	✓	J
20	2	R	✓	G
21	2	C	✓	J
22		F	✓	
23	3	R	✓	G
24	3	R	✓	J
25		F	✓	
26		F	✓	
27	3	R	✓	G
28		F	✓	
29	3	R	✓	J
30	1	R	✓	G
31		F	✓	
32		F	✓	
33	1	R	✓	G
34	3	C	✓	J
35	3	C	✓	J
36	1	R	✓	G
37	2	R	✓	J
38	2	R	✓	J
39		F	✓	
40		F	✓	
41		F	✓	
42	2	C	✓	G
43	2	R	✓	G
44		F	✓	
45		F	✓	

RANGE
1 700 feet
2 800 feet
3 900 feet

TYPE
R Run
C Crawl
F False

NOTES
Trial
3 C ✓
1 R ✓
2 C ✓
1 C ✓
F ✓
2 R ✓
F ✓
2 C ✓
3 R ✓
1 R ✓

MONITOR TALLY SHEET

DATE 12-4-81 SHIFT 1 STATION CCTV

OBSERVER [redacted] MONITOR D.C.

#	RANGE	TYPE	DETECTION TIME	VERIFY	RESULT
1	2	R	1.80		+
2	3	C	4.60		+
3	–	F	15.14		+
4	–	F	16.69		+
5	1	C	2.88		+
6	1	R	1.78		+
7	2	C	7.24		+
8	–	F	16.58		+
9	1	C	3.13		+
10	3	C	6.26		+
11	2	C	4.70		+
12	–	F	12.41		+
13	1	R	1.70		+
14	3	R	1.92		+
Start 15	1	C	4.19		+
16	1	C	3.79		+
17	2	C	5.83		+
18	1	C	3.58		+
19	3	C	6.32		+
20	2	R	2.32		+
21	2	C	5.37		+
22	–	F	16.55		+
23	3	R	2.06		+
24	3	R	1.94		+
25	–	F	14.48		+
26	–	F	11.85		+
27	2	R	1.81		+
28	–	F	14.61		+
29	3	R	1.79		+
30	1	R	2.25		+
31	–	F	10.20		+
32	–	F	11.72		+
33	1	R	2.37		+
34	3	C	3.04		+
35	3	C	3.96		+
36	1	R	2.09		+
37	2	R	1.80		+
38	2	R	1.66		+
39	–	F	12.27		+
40	–	F	15.06		+
41	–	F	11.15		+
42	2	C	7.00		+
43	2	R	1.88		+
44	–	F	15.29		+
45	–	F	15.55		+

RANGE
1 700 feet
2 200 feet
3 900 feet

TYPE
R Run
C Crawl
F False

NOTES

3 C 8.63
1 R 1.54
2 C 8.00
1 C 3.17
F 9.37+
2 R 1.94
F 9.32+
2 C 8.48
3 R 1.55
1 R 1.78

FF

Small monitor gives more distinguishable [illegible] for [illegible]

times are inflated due to "blind" detection between board & buffer

MONITOR TALLY SHEET

DATE 12-4-81 SHIFT 1 STATION Tower 3.9 A

OBSERVER Clementsia MONITOR RCS

#	RANGE	TYPE	DETECTION TIME	VERIFY	RESULT
1	2	R	1.77	2R	+
2	3	C	6.68	2C	—
3		F		F	+
4		F		F	+
5	1	C	3.58	1C	+
6	1	R	1.72	1R	
7	2	C	8.59	2C	
8		F		F	
9	1	C	4.71	1C	
10	3	C	7.49	3C	
11	2	C	7.97	2C	
12		F		F	
13	1	R	1.72	1R	
14	3	R	2.03	3R	
15	1	C	5.76	1C	+
16	1	C	4.82	1C	+
17	2	C	9.22	2C	+
18	1	C	4.94	1C	+
19	3	C	9.36	3C	+
20	2	R	2.25	2R	+
21	2	C	11.24	2C	+
22		F	15.44	2C	—
23	3	R	2.25	3R	+
24	3	R	1.96	3R	+
25		F		F	+
26		F		F	+
27	3	R	2.06	3R	+
28		F		F	+
29	3	R	1.97	2R	—
30	1	R	2.47	1R	+
31		F		F	+
32		F		F	+
33	1	R	2.78	1R	+
34	3	C	9.16	3C	+
35	3	C	8.42	2C	—
36	1	R	2.18	1R	+
37	2	R	1.82	2R	+
38	2	R	1.87	2R	+
39		F		F	+
40		F		F	+
41		F		F	+
42	2	C	8.73	2C	+
43	2	R	2.1	2R	+
44		F		F	+
45		F		F	+

1839

start 1839
finish 1916

RANGE
1 700 feet
2 800 feet
3 900 feet

TYPE
R Run
C Crawl
F False

NOTES

3C	3C	14.68
1R	1R	1.70
2C	2C	9.34
1C	1C	5.59
F	F	
2R	2R	2.28
F	F	
2C	2C	10.64
3R	2R	1.92 (−)
trying too hard 1R	1R	1.79

INTRUSION SCHEDULE

DATE 12/4/81 SHIFT 2 SUPERVISOR RCS

TEST CONFIGURATION: Reflectors/spots

#	RANGE	TYPE	INTRUDER
1	—	F	
~~2~~	3	R	
~~3~~	1	R	
~~4~~	1	C	
~~5~~		F	
~~6~~	2	C	
~~7~~	2	C	
~~8~~	3	R	
~~9~~		F	
~~10~~		F	
~~11~~	2	R	
~~12~~		F	
~~13~~		F	
~~14~~	2	C	
~~15~~	1	R	
~~16~~	2	R	
~~17~~	3	C	
~~18~~	1	R	
~~19~~	3	C	
~~20~~	1	R	
~~21~~		F	
~~22~~		F	
~~23~~	3	C	
~~24~~		F	
~~25~~		F	
~~26~~	1	C	
~~27~~	1	C	
~~28~~		F	
~~29~~		F	
~~30~~	3	R	
~~31~~	2	C	
~~32~~		F	
~~33~~	2	R	
~~34~~		F	
~~35~~	2	R	
~~36~~	1	R	
~~37~~	3	C	
~~38~~	2	C	
~~39~~	1	C	
~~40~~		F	
~~41~~	3	R	
~~42~~	2	R	
~~43~~	3	R	
~~44~~	3	C	
45	1	C	

RANGE
1 700 feet
2 800 feet
3 900 feet

TYPE
R Run
C Crawl
F False

NOTES
1 R
3 R
3 C
1 R
2 C 17.5
2 C 18.2
F
2 R
1 C
F

14

MONITOR TALLY SHEET

DATE 12/4/81 SHIFT #2 STATION CCTV

OBSERVER Paul MONITOR Tom

#	RANGE	TYPE	DETECTION TIME	VERIFY	RESULT
1		F	~~1.67~~ 1.39	~~+~~ +	~~.~~ F
2	3	R	1.67	+	3R
3	1	R	2.11	+	1R
4	1	C	2.64	+	1C
5		F	10.99	+	F
6	2	C	7.57	+	2C
7	2	C	5.43	+	2C
8	3	R	1.84	+	3R
9		F	12.38	+	F
10		F	13.07	+	F
11	2	R	1.51	+	2R
12		F	14.02	+	F
13		F	13.39	+	F
14	2	C	3.41	+	2C
15	1	R	1.65	+	1R
16	2	R	1.63	+	2R
17	3	C	5.43	+	3C
18	1	R	1.48	+	1R
19	3	C	4.41	+	3C
20	1	R	1.46	+	1R
21		F	13.46	+	F
22		F	12.18	+	F
23	3	C	9.58	+	3C
24		F	15.14	+	F
25		F	15.34	+	F
26	1	C	4.10	+	1C
27	1	C	3.49	+	1C
28		F	17.28	+	F
29		F	19.39	+	F
30	3	R	1.40	+	3R
31	2	C	5.63	+	2C
32		F	18.74	+	F
33	2	R	1.75	+	2R
34		F	10.97	+	F
35	2	R	1.54	+	2R
36	1	R	2.09	+	1R
37	3	C	4.30	+	3C
38	2	C	6.04	+	2C
39	1	C	2.63	+	1C
40		F	17.01	+	F
41	3	R	1.94	+	3R
42	2	R	1.63	+	2R
43	3	R	1.72	+	3R
44	3	C	3.63	+	3C
45	1	C	2.05	+	1C

Tom's mistake

RANGE
1 700 feet
2 800 feet
3 900 feet

TYPE
R Run
C Crawl
F False

NOTES

1R + 1.77
3R + 1.81
3C + 6.77
1R + 1.78
2C + 6.28
2C + 6.13
F + 17.81
2R + 1.62
1C + 3.15
(delayed start) F + 14.89

MONITOR TALLY SHEET

DATE 12-4 SHIFT 2 STATION Tower

OBSERVER El Henry MONITOR DMA

8:00

#	RANGE	TYPE	DETECTION TIME	VERIFY	RESULT
1		F	11.36	?	?
2	3	R	1.62	3R	+
3	1	R	2.05	1R	+
4	1	C	2.52	1C	+
5		F	—	F	+
6	2	C	1.45	2C	+
7	2	C	6.54	2C	+
8	3	R	1.84	3R	+
9		F	—	F	+
10		F	—	F	+
11	2	R	1.51	2R	+
12		F	—	F	+
13		F	—	F	+
14	2	C	5.64	2C	+
15	1	R	1.43	1R	+
16	2	R	1.68	2R	+
17	3	C	3.92	3C	+
18	1	R	1.48	1R	+
19	3	C	4.08	3C	+
20	1	R	1.55	1R	+
21		F	—	F	+
22		F	—	F	+
23	3	C	9.47	3C	+
24		F	—	F	+
25		F	—	F	+
26	1	C	3.43	1C	+
27	1	C	3.47	1C	+
28		F	—	F	+
29		F	—	F	+
30	3	R	1.68	3R	+
31	2	C	6.03	2C	+
32		F	—	F	+
33	2	R	1.76	2R	+
34		F	—	F	+
35	2	R	1.44	2R	+
36	1	R	2.07	1R	+
37	3	C	4.85	3C	+
38	2	C	6.50	2C	+
39	1	C	2.08	1C	+
40		F	—	F	+
41	3	R	1.68	3R	+
42	2	R	1.60	2R	+
43	3	R	1.67	3R	+
44	3	C	3.89	3C	+
45	1	C	1.99	1C	+

start

Hatbutton by mistake

RANGE
1 700 feet
2 800 feet
3 900 feet

TYPE
R Run
C Crawl
F False

NOTES

Trial

1R	1.73	1R	+
3R	1.84	3R	+
3C	5.25	2C	⊙
1R	1.64	1R	+
2C	4.51	2C	+
2C	5.95	2C	+
F	—	F	+
2R	1.86	2R	+
1C	4.08	1C	+
F	—	F	+

thought it was 2 C, could not differentiate between 2 & 3

INTRUSION SCHEDULE

DATE 6-4 SHIFT 3 SUPERVISOR RMA

TEST CONFIGURATION: Reflectors/spots 9:15

#	RANGE	TYPE	INTRUDER
1		F	✓
2		F	✓
3	1	R	✓ G
4	2	C	✓ J
5	3	C	✓ G
6		F	✓
7		F	✓
8	1	R	✓ J
9		F	✓
10	3	C	✓ G
11	1	C	✓ J
12		F	✓
13	2	R	✓ G
14		F	✓
15	1	R	✓ J
16		F	✓
17	3	R	✓ G
18	3	C	✓ G
19		F	✓
20	3	R	✓ G
21	2	C	✓ J
22	2	C	✓ G
23		F	✓
24		F	✓
25	2	C	✓ J
26		F	✓
27	2	R	✓ G
28	2	R	✓ J
29	3	C	✓ G
30	1	R	✓ J
31	2	R	✓ G
32	3	R	✓ J
33	3	C	✓ J
34	3	R	✓ J
35	1	C	✓ G
36		F	✓
37	1	C	✓ G
38		F	✓
39		F	✓
40	1	C	✓ J
41	2	C	✓ G
42	1	R	✓ J
43	1	C	✓ J
44	2	R	✓ G
45	3	R	✓ J

RANGE
1 700 feet
2 800 feet
3 900 feet

TYPE
R Run
C Crawl
F False

NOTES

MONITOR TALLY SHEET

DATE 12/4/81 SHIFT 3 STATION TV

OBSERVER Ale Henry MONITOR RCS

#	RANGE	TYPE	DETECTION TIME	VERIFY	RESULT
1		F	12.94	F	
2		F	15.90	F	
3	1	R	1.49	1R	
4	2	C	4.68	2C	
5	3	C	2.78	3C	
6		F	16.88	F	
7		F	16.73	F	
8	1	R	2.23	1R	
9		F	14.6	F	
10	3	C	3.61	3C	
11	1	C	2.59	1C	
12		F	29.94	F	
13	2	R	2.03	2C	
14		F	13.18	F	
15	1	R	2.11	1R	
16		F	16.71	F	
17	3	R	1.59	3R	
18	3	C	3.71	3C	
19		F	16.15	F	
20	3	R	1.38	3R	
21	2	C	4.67	2C	
22	2	C	6.86	2C	
23		F	18.99	F	
24		F	20.97	F	
25	2	C	4.03	2C	
26		F	17.08	F	
27	2	R	1.85	2R	
28	2	R	1.99	2R	
29	3	C	3.25	3C	
30	1	R	2.02	1R	
31	2	R	1.67	2R	
[illegible]	3	R	1.53	3R	
[illegible]	3	C	4.29	3C	
34	3	R	1.72	3R	
35	1	C	4.79	1C	
36		F	16.14	F	
[illegible]	1	C	4.45	1C	
2114		F	38.59	F	
39		F	16.11	F	
40	1	C	3.—	1C	
41	2	C	6.52	2C	
42	1	R	1.99	1R	
43	1	C	0.35	1C	
44	2	R	1.82	2R	
45	3	R	.88	3R	

Start 2114
Finish 2143

RANGE
1 700 feet
2 800 feet
3 900 feet

TYPE
R Run
C Crawl
F False

NOTES

MONITOR TALLY SHEET

DATE 1/4/81 SHIFT 3 STATION Tower

OBSERVER Paul MONITOR Tom

#	RANGE	TYPE	DETECTION TIME	VERIFY	RESULT
1		F		+	F
2		F	8.16	−	3C
3	1	R	1.64	+	1R
4	2	C	8.78	+	2C
5	3	C	4.63	−	2C
6		F		+	F
7		F		+	F
8	1	R	2.32	+	1R
9		F	0.37	−	(*)
10	3	C	7.37	−	2C
11	1	C	3.30	+	1C
12		F		+	F
13	2	R	2.01	+	2R
14		F		+	F
15	1	R	1.97	+	1R
16		F		+	F
17	3	R	1.91	+	3R
18	3	C	5.66	+	3C
19		F		+	F
20	3	R	1.70	+	3R
21	2	C	6.68	+	2C
22	2	C	8.85	+	2C
23		F		+	F
24		F		+	F
25	2	C	6.67	+	2C
26		F		+	F
27	2	R	1.87	+	2R
28	2	R	1.97	+	2R
29	3	C	5.67	+	3C
30	1	R	2.17	+	1R
31	2	R	1.69	+	2R
32	3	R	1.66	+	3R
33	3	C	8.53	+	3C
34	3	R	1.83	+	3R
35	1	C	5.65	+	1C
36		F		+	F
37	1	C	5.71	+	1C
38		F		+	F
39		F		+	F
40	1	C	3.60	+	1C
41	2	C	9.31	+	2C
42	1	R	2.00	+	1R
43	1	C	4.13	+	1C
44	2	R	1.93	+	2R
45	3	R	1.90	+	3R

RANGE
1 700 feet
2 800 feet
3 900 feet

TYPE
R Run
C Crawl
F False

NOTES (*) = accidently hit button.

[illegible]

INTRUSION SCHEDULE

DATE 12-4 SHIFT 4 SUPERVISOR Tom

TEST CONFIGURATION: SPOTS/RETROREFLECTORS

#	RANGE	TYPE	INTRUDER	
1		F	✓	
2		F	✓	
3	1	R	✓	J
4	1	C	✓	J
5	3	R	✓	G
6	2	C	✓	J
7		F	✓	
8	2	R	✓	G
9	2	C	✓	J
10	3	C	✓	G
11	2	R	✓	J
12	1	R	✓	G
13		F	✓	
14		F	✓	
15	3	R	✓	J
16		F	✓	
17		F	✓	
18	3	C	✓	J
19		F	✓	
20		F	✓	
21	2	R	✓	J
22	3	C	✓	G
23	2	R	✓	J
24	1	C	✓	J
25	1	R	✓	J
26		F	✓	
27	2	C	✓	G
28	1	R	✓	J
29	2	C	✓	G
30	1	C	✓	J
31	3	C	✓	G
32	1	C	✓	J
33	1	R	✓	J
34	3	C	✓	G
35		F	✓	
36	2	C	✓	J
37		F	✓	
38	2	R	✓	G
39	1	C	✓	J
40	3	R	✓	C
41	3	R	✓	G
42		F	✓	
43		F	✓	
44	3	R	✓	G
45		F	✓	

RANGE
1 700 feet
2 800 feet
3 900 feet

TYPE
R Run
C Crawl
F False

NOTES

MONITOR TALLY SHEET

DATE 1/4/81 SHIFT 4 STATION Tower

OBSERVER A. Henry MONITOR RCS

#	RANGE	TYPE	DETECTION TIME	VERIFY	RESULT
1		F		F	
2		F		F	
3	1	R	1.53	1R	
4	1	C	2.20	1C	
5	3	R	1.17	3R	
6	2	C	4.40	2C	
7		F		F	
8	2	R	1.25	2R	
9	2	C	3.77	2C	
10	3	C	3.07	3C	
11	2	R	1.35	2R	
12	1	R	2.41	1R	
13		F		F	
14		F		F	
15	3	R	1.22	3R	
16		F		F	
17		F		F	
18	3	C	7.58	3C	
19		F		F	
20		F		F	
21	2	R	1.88	2R	
22	3	C	3.37	3C	
23	2	R	1.46	2R	
24	1	C	3.05	1C	
25	1	R	1.54	1R	
26		F		F	
27	2	C	7.50	2C	
28	1	R	1.55	1R	
29	2	C	5.98	2C	
30	1	C	2.09	1C	
31	3	C	2.50	3C	
32	1	C	2.30	1C	
33	1	R	0.90	1R	
34	3	C	2.90	3C	
35		F		F	
36	2	C	4.62	2C	
37		F		F	
38	2	R	1.28	2R	
39	1	C	1.04	1C	
40	3	R	0.90	3R	
41	3	R	1.85	3R	
42		F		F	
43		F		F	
44	3	R	1.14	3R	
45		F		F	

2209

Start 2209
Finish 2240

RANGE
1 700 feet
2 800 feet
3 900 feet

TYPE
R Run
C Crawl
F False

NOTES

MONITOR TALLY SHEET

DATE 12/4/81 SHIFT 4 STATION CCTV

OBSERVER Paul MONITOR DC

#	RANGE	TYPE	DETECTION TIME	VERIFY	RESULT
1		F	15.40		+
2		F	12.64		+
3	1	R	1.44		+
4	1	C	2.25		+
5	3	R	1.21		+
6	2	C	4.48		+
7		F	10.24		+
8	2	R	1.60		+
9	2	C	3.46		+
10	3	C	3.20		+
11	2	R	1.44		+
12	1	R	2.37		+
13		F	9.45		+
14		F	11.49		+
15	3	R	1.21		+
16		F	9.85		+
17		F	10.52		+
18	3	C	5.46		+
19		F	15.79		+
20		F	13.68		+
21	2	R	1.96		+
22	3	C	3.21		+
23	2	R	1.57		+
Start 24	1	C	2.99		+
25	1	R	1.29		+
26		F	23.61		+
27	2	C	7.11		+
28	1	R	1.63		+
29	3	C	6.31		+
30	1	C	2.49		+
31	3	C	3.50		+
32	1	C	2.35		+
33	1	R	0.84		+
34	3	C	4.96		+
35		F	11.32		+
36	2	C	4.79		+
37		F	10.74		+
38	2	R	1.40		+
39	1	C	1.16		+
40	3	R	1.16		+
41	3	R	1.84		+
42		F	11.30		+
43		F	13.94		+
44	3	R	1.30		+
45		F	9.85		+

RANGE
1 700 feet
2 800 feet
3 900 feet

TYPE
R Run
C Crawl
F False

NOTES

INTRUSION SCHEDULE

DATE 12/7/81 SHIFT 1 SUPERVISOR Tom

TEST CONFIGURATION: Reflectors/Spots

#	RANGE	TYPE	INTRUDER	
1	2	R	✓	
2	3	C	✓	
3	3	R	✓	
4	2	R	✓	
5	3	R	✓	
6		F		
7	1	C		
8	2	C		
9		F		
10	3	R		
11	1	C		
12		F		
13	2	R		
14	3	C		
15		F		
16	1	R		
17		F		
18	1	R		
19	1	R		
20		F	✓	
21	2	C	✓	G
22	3	C	✓	J
23		F	✓	
24		F	✓	
25		F	✓	
26	2	C	✓	
27		F	✓	
28	2	C	✓	
29	1	C	✓	
30	3	C	✓	
31	3	R	✓	
32	2	C	✓	
33	2	R	✓	
34		F	✓	
35		F	✓	Drizzling
36		F	✓	
37	1	R	✓	
38	1	R	✓	
39	1	C	✓	
40	2	R	✓	
41		F	✓	
42		F	✓	
43	1	C	✓	
44	3	R	✓	
45	3	C	✓	

RANGE
1 700 feet
2 800 feet
3 900 feet

TYPE
R Run
C Crawl
F False

NOTES

3R ✓
F ✓
1R ✓
3C ✓
2C ✓
F ✓
G 1R ✓
1C ✓
3C ✓
2R

MONITOR TALLY SHEET

DATE 12-7-81 SHIFT 1 STATION TV

OBSERVER P Clementsia MONITOR Scott

#	RANGE	TYPE	DETECTION TIME	VERIFY	RESULT
1	2	R	1.29	2R	
2	3	C	didn't [illegible]		
3	3	R	1.39	3R	
4	2	R	1.17	2R	
5	3	R	1.39	3R	
6		F	12.39	F	
7	1	C	4.12	1C	
8	2	C	5.67	2C	
9		F	10.62	F	
10	3	R	1.41	3R	
11	1	C	6.17	1C	
12		F	11.43	F	
13	2	R	1.14	2R	
14	3	C	7.49	3C	
15		F	10.62	F	
16	1	R	1.38	1R	
17		F	10.72	F	
18	1	R	1.28	1R	
19	1	R	1.43	1R	
20		F	14.36	F	
21	2	C	5.83	2C	
22	3	C	7.19	3C	
23		F	14.04	F	
24		F	17.30	F	
25		F	17.76	F	
26	2	C	6.03	2C	
27		F	14.73	F	
28	2	C	5.23	2C	
29	1	C	5.72	1C	
30	3	C	4.77	3C	
31	3	R	1.59	3R	
32	2	C	4.10	2C	
33	2	R	1.44	2R	
34		F	11.58	F	
35		F	13.44	F	
36		F	13.13	F	
37	1	R	1.53	1R	
38	1	R	1.26	1R	
39	1	C	6.53	1C	
40	2	R	1.30	2R	
41		F	15.52	F	
42		F	16.37	F	
43	1	C	4.22	1C	
44	3	R	1.36	3R	
45	3	C	5.07	3C	

Start 1758
Finish ~1830

RANGE
1 700 feet
2 800 feet
3 900 feet

TYPE
R Run
C Crawl
F False

NOTES

3R + 1.59
F + 12.32
1R + 1.51
2C + 7.17
2C + 4.29
F + 12.25
1R + 1.31
1C + 6.64
3C + 6.43
2R + 1.33

Ben Barker visited the site @ 1800

MONITOR TALLY SHEET

DATE 12-7-81 SHIFT 1 STATION Tower

OBSERVER Ed Henry MONITOR RmA

#	RANGE	TYPE	DETECTION TIME	VERIFY	RESULT
1	2	R	1.11	2R	+
2	3	C	4.37	3C	+
3	3	R	1.29	3R	+
4	2	R	1.40	2R	+
5	3	R	1.42	3R	+
6		F	—	F	+
7	1	C	3.95	1C	+
8	2	C	6.03	2C	+
9		F	—	F	+
10	3	R	1.37	3R	+
11	1	C	7.40	1C	+
12		F	—	F	+
13	2	R	1.24	2R	+
14	3	C	8.77	3C	+
15		F	—	F	+
16	1	R	1.44	1R	+
17		F	—	F	+
18	1	R	1.37	1R	+
19	1	R	1.48	1R	+
20		F	—	F	+
21	2	C	5.80	2C	+
22	3	C	5.0	3C	+
23		F	—	F	+
24		F	—	F	+
25		F	—	F	+
26	2	C	5.46	2C	+
27		F	—	F	+
28	2	C	5.41	2C	+
29	1	C	6.45	1C	+
30	3	C	4.92	3C	+
31	3	R	1.20	3R	+
32	2	C	4.59	2C	+
33	2	R	1.25	2R	+
34		F	—	F	+
35		F	—	F	+
36		F	—	F	+
37	1	R	1.55	1R	+
38	1	R	1.29	1R	+
39	1	C	7.21	1C	+
40	2	R	1.17	2R	+
41		F	—	F	+
42		F	—	F	+
43	1	C	6.24	1C	+
44	3	R	1.26	3R	+
45	3	C	4.97	3C	+

starts

RANGE
1 700 feet
2 800 feet
3 900 feet

TYPE
R Run
C Crawl
F False

NOTES

3R 1.48 + 3R
F — F +
1R 1.41 1R +
2C 7.41 2C +
2C 4.50 2C +
F — F +
1R 1.28 1R +
1C 7.89 1C +
3C 6.50 3C +
2R 1.25 2R +

INTRUSION SCHEDULE

DATE 12/7/81 SHIFT 2 SUPERVISOR RCS

TEST CONFIGURATION: Reflectors/spots

#	RANGE	TYPE	INTRUDER
~~1~~		F	
~~2~~		F	
~~3~~	1	R	G
~~4~~		F	
~~5~~		F	
~~6~~	1	R	
~~7~~	2	C	
~~8~~	3	R	
~~9~~	1	C	
~~10~~	2	R	
~~11~~		F	
~~12~~		F	
~~13~~	1	R	
~~14~~		F	
~~15~~		F	
~~16~~		F	
~~17~~		F	
~~18~~	3	R	V
~~19~~	1	C	
~~20~~		F	
~~21~~	3	C	
~~22~~	2	C	
~~23~~	3	R	
~~24~~	1	C	
~~25~~		F	
~~26~~	2	R	
~~27~~	2	R	
~~28~~	3	C	
~~29~~		F	
~~30~~	3	C	
~~31~~	2	R	V
~~32~~	1	C	
~~33~~	2	C	
~~34~~	2	R	
~~35~~	2	C	
~~36~~		F	
~~37~~	1	R	
~~38~~	3	R	
~~39~~		F	
~~40~~	2	C	G
~~41~~	3	C	
~~42~~	3	R	
~~43~~	1	C	V
~~44~~	3	C	
~~45~~	1	R	

RANGE
1 700 feet
2 800 feet
3 900 feet

TYPE
R Run
C Crawl
F False

NOTES

~~F~~
G ~~1R~~
V ~~2C~~
~~2C~~
~~F~~
~~1R~~
~~1C~~
~~3C~~
G ~~2R~~
~~3R~~

21.4
15.8
21.5

MONITOR TALLY SHEET

DATE 12/7/81 SHIFT 2 STATION Tower

OBSERVER Dave MONITOR Jim

#	RANGE	TYPE	DETECTION TIME	VERIFY	RESULT
1		F		+	F
2		F		+	F
3	1	R	1.72	+	1R
4		F		+	F
5		F		+	F
6	1	R	2.07	+	1R
7	2	C	6.79	+	2C
8	3	R	1.67	+	3R
9	1	C	4.63	+	1C
10	2	R	1.37	+	2R
11		F		+	F
12		F		+	F
13	1	R	1.89	+	1R
14		F		+	F
15		F		+	F
16		F		+	F
17		F		+	F
18	3	R	1.68	+	3R
19	1	C	6.47	+	1C
20		F		+	F
21	3	C	6.42	+	3C
22	2	C	8.57	+	2C
23	3	R	1.57	+	3R
24	1	C	6.31	+	1C
25		F		+	F
26	2	R	1.48	+	2R
27	2	R	1.55	+	2R
28	3	C	6.18	+	3C
29		F		+	F
30	3	C	6.71	+	3C
31	2	R	1.33	+	2R
32	1	C	6.81	+	1C
33	2	C	5.08	+	2C
34	2	R	1.61	+	2R
35	2	C	4.22	+	2C
36		F		+	F
✓ 37	1	R	1.68	+	1R
38	3	R	1.68	+	3R
39		F		+	F
40	2	C	10.24	+	2C
41	3	C	6.37	+	3C
42	3	R	1.82	+	3R
43	1	C	6.65	+	1C
44	3	C	9.83	+	3C
45	1	R	1.72	+	1R

RANGE
1 700 feet
2 800 feet
3 900 feet

TYPE
R Run
C Crawl
F False

NOTES

F +
1R + 1.91
2C + 7.78
2C + 10.17 late start
F +
1R + 1.87
1C + 11.77
3C + 6.97
2R + 1.46
3R + 1.91

MONITOR TALLY SHEET

DATE 12-7-81 SHIFT 2 STATION CCTV

OBSERVER el Henry MONITOR RMA

start 7:45
end 8:32

#	RANGE	TYPE	DETECTION TIME	VERIFY	RESULT
1		F	20.95	F	+
2		F	16.65	F	+
3	1	R	1.76	1R	+
4		F	12.79	F	+
5		F	25.34	F	+
6	1	R	1.98	1R	+
7	2	C	6.07	2C	+
8	3	R	1.48	3R	+
9	1	C	5.08	1C	+
10	2	R	1.29	2R	+
11		F	9.13	F	+
12		F	14.02	F	+
13	1	R	1.78	1R	+
14		F	9.70	F	+
15		F	12.38	F	+
16		F	13.49	F	+
17		F			
18	3	R	1.91	3R	+
19	1	C	5.64	1C	+
20		F	12.63	F	+
21	3	C	16.06	3C	+
22	2	C	7.03	2C	+
23	3	R	1.57	3R	+
24	1	C	6.07	1C	+
25		F	12.23	F	+
26	2	R	1.25	2R	+
27	2	R	1.59	2R	+
28	3	C	4.63	3C	+
29		F	16.23	F	+
30	3	C	5.45	3C	+
31	2	R	1.34	2R	+
32	1	C	6.37	1C	+
33	2	C	4.14	2C	+
34	2	R	1.65	2R	+
35	2	C	3.66	2C	+
36		F	15.53	F	+
37	1	R	1.69	1R	+
38	3	R	1.54	3R	+
39		F	13.31	F	+
40	2	C	8.56	2C	+
41	3	C	3.79	3C	+
42	3	R	1.75	3R	+
43	1	C	5.12	1C	+
44	3	C	4.77	3C	+
45	1	R	1.59	1R	+

subject tube difference

→ 17

reviewed tape difference

start

RANGE
1 700 feet
2 800 feet
3 900 feet

TYPE
R Run
C Crawl
F False

NOTES
subject tube difference
F 33.37 F +
1R 35.11 1R +
2C 4.66 2C +
2C 7.54 2C +
F 10.86 F +
1R 1.79 1R +
1C 9.50 1C +
3C 4.41 3C +
2R 1.42 2R +
3R 1.94 3R +

enemed

man walked back across gate

INTRUSION SCHEDULE

DATE 12/2/81 SHIFT 3 SUPERVISOR RmA

TEST CONFIGURATION: Reflectors/spots

#	RANGE	TYPE	INTRUDER
1		F	✓
2	2	C	✓
3	1	C	✓
4	3	R	✓
5	1	R	✓
6		F	✓
7	1	C	✓
8	3	R	✓
9		F	✓
10		F	✓
11	1	C	✓
12	2	C	✓
13	3	C	✓
14	3	R	✓
15		F	✓
16	1	C	✓
17		F	✓
18		F	✓
19	1	C	✓
20	3	R	✓
21	1	R	✓
22		F	✓
23		F	✓
24	1	R	✓
25		F	✓
26	1	R	✓
27	3	C	✓
28	2	R	✓
29		F	✓
30	3	C	✓
31	2	R	✓
32	2	R	✓
33		F	✓
34		F	✓
35	3	R	✓
36		F	✓
37	2	C	✓
38		F	✓
39	2	C	✓
40	3	C	✓
41	1	R	✓
42	2	R	✓
43	2	C	✓
44	2	R	✓
45	3	C	✓

start →

RANGE
1 700 feet
2 800 feet
3 900 feet

TYPE
R Run
C Crawl
F False

NOTES

MONITOR TALLY SHEET

DATE 12-7-81 SHIFT 3 STATION Tower

OBSERVER E. Henry MONITOR RRS

#	RANGE	TYPE	DETECTION TIME	VERIFY	RESULT
1		F		F	
2	2	C	8.89	2C	
3	1	C	4.65	1C	
4	3	R	1.86	3R	
5	1	R	2.02	1R	
6		F		F	
7	1	C	10.34	1C	
8	3	R	1.70	3R	
9		F		F	
10		F		F	
11	1	C	7.89	1C	
12	2	C	3.81	2C	
13	3	C	5.56	3C	
14	3	R	1.74	3R	
15		F		F	
16	1	C	7.50	1C	
17		F		F	
18		F		F	
19	1	C	3.95	1C	
20	3	R	2.02	3R	
21	1	R	2.13	1R	
22		F		F	
23		F		F	
24	1	R	2.01	1R	
25		F		F	
26	1	R	[illegible]	1R	
27	3	C	8.10	3C	
28	2	R	1.38	2R	
29		F		F	
30	3	C	9.64	3C	
31	2	R	1.42	2R	
32	2	R	1.73	2R	
33		F		F	
34		F		F	
35	3	R	1.46	3R	
36		F		F	
37	2	C	8.57	2C	
38		F		F	
39	2	C	5.11	2C	
40	3	C	4.83	3C	
41	1	R	2.24	1R	
42	2	R	1.57	2R	
43	2	C	3.44	2C	
44	2	R	1.43	2R	
45	3	C	6.22	3C	

1958

RANGE
1 700 feet
2 800 feet
3 900 feet

TYPE
R Run
C Crawl
F False

NOTES

MONITOR TALLY SHEET

DATE 12-1-81 SHIFT 3 STATION CCTV

OBSERVER Paul MONITOR Bob Bernard

#	RANGE	TYPE	DETECTION TIME	VERIFY	RESULT
1		F	15.95	F	+
2	2	C	8.56	C2	+
3	1	C	4.83	C1	+
4	3	R	1.75	R3	+
5	1	R	1.86	R1	+
6		F	16.63	F	+
7	1	C	9.23	C1	+
8	3	R	1.70	R3	+
9		F	16.63	F	+
10		F	15.94	F	+
11	1	C	7.90	C1	+
12	2	C	3.40	C2	+
13	3	C	5.35	C3	+
14	3	R	1.75	R3	+
15		F	14.03	F	+
16	1	C	7.46	C1	+
17		F	19.89	F	+
18		F	18.68	F	+
19	1	C	4.46	C1	+
20	3	R	1.89	R3	+
21	1	R	2.14	R1	+
✓ 22		F	13.65	F	+
23		F	11.24	F	+
24	1	R	1.98	R1	+
25		F	9.49	F	+
26	1	R	[illegible]	R1	+
27	3	C	5.40	C3	+
28	2	R	1.48	R2	+
29		F	11.60	F	+
30	3	C	[illegible]	C3	+
31	2	R	1.46	R2	+
32	2	R	1.79	R2	+
33		F	14.[illegible]	F	+
34		F	13.05	F	+
35	3	R	1.53	R3	+
36		F	18.50	F	+
37	2	C	9.72	C2	+
38		F	13.45	F	+
39	2	C	5.53	C2	+
40	3	C	5.43	C3	+
41	1	R	[illegible]	R1	+
42	2	R	1.59	R2	+
43	2	C	3.91	C2	+
44	2	R	1.37	R2	+
45	3	C	+16	C3	+

RANGE
1 700 feet
2 800 feet
3 900 feet

TYPE
R Run
C Crawl
F False

NOTES

1.60 repeated

INTRUSION SCHEDULE

DATE 12/7/81 SHIFT 4 SUPERVISOR [illegible]

TEST CONFIGURATION: Reflectors/Spots

#	RANGE	TYPE	INTRUDER
1	1	C	✓
2	3	C	✓
3		F	✓
4	1	R	✓
5	1	R	✓
6		F	✓
7	3	C	✓
8	1	R	✓
9		F	✓
10	3	R	✓
11		F	✓
12		F	✓
13	2	C	✓
14		F	✓
15	2	R	✓
16		F	✓
17		F	✓
18	3	R	✓
19	3	C	✓
20	3	R	✓
21	2	R	✓
22	1	R	✓
23	2	C	✓
24	2	R	✓
25	3	R	✓
26	3	C	✓
27	2	R	✓
28	2	C	✓
29	2	C	✓
30		F	✓
31		F	✓
32		F	✓
33	2	R	✓
34	1	R	✓
35		F	✓
36	1	C	✓
37		F	✓
38	1	C	✓
39		F	✓
40	1	C	✓
41	3	C	✓
42	3	R	✓
43	2	C	✓
44		F	✓
45	1	C	✓

RANGE
1 700 feet
2 800 feet
3 900 feet

TYPE
R Run
C Crawl
F False

NOTES

MONITOR TALLY SHEET

DATE 12-7-81 SHIFT 4 STATION Tower

OBSERVER Paul MONITOR RMA

#	RANGE	TYPE	DETECTION TIME	VERIFY	RESULT
1	1	C	5.17	1C	+
2	3	C	9.64	3C	+
3		F	—	F	+
4	1	R	1.29	1R	+
5	1	R	1.66	1R	+
6		F	—	F	+
7	3	C	7.78	3C	+
8	1	R	1.68	1R	+
9		F	—	F	+
10	3	R	0.81	3R	+
11		F	—	F	+
12		F	—	F	+
13	2	C	3.33	2C	+
14		F	—	F	+
15	2	R	1.18	2R	+
16		F	—	F	+
17		F	—	F	+
18	3	R	1.36	3R	+
19	3	C	6.19	3C	+
20	3	R	1.60	3R	+
21	2	R	1.20	2R	+
22	1	R	1.78	1R	+
23	2	C	7.75	2C	+
24	2	R	1.10	2R	+
25	3	R	1.27	3R	+
26	3	C	7.10	3C	+
27	2	R	1.55	2R	+
28	2	C	5.58	2C	+
29	2	C	7.96	2C	+
30		F	—	F	+
31		F	—	F	+
32		F	—	F	+
33	2	R	1.11	2R	+
34	1	R	1.48	1R	+
35		F	—	F	+
36	1	C	9.35	1C	+
37		F	—	F	+
38	1	C	7.35	1C	+
39		F	—	F	+
40	1	C	3.39	1C	+
41	3	C	4.21	3C	+
42	3	R	1.27	3R	+
43	2	C	7.46	2C	+
44		F	—	F	+
45	1	C	4.40	1C	+

start →

RANGE
1 700 feet
2 800 feet
3 900 feet

TYPE
R Run
C Crawl
F False

NOTES

MONITOR TALLY SHEET

DATE 12/7/81 SHIFT 4 STATION IV

OBSERVER E. Henry MONITOR JRS

#	RANGE	TYPE	DETECTION TIME	VERIFY	RESULT
1	1	C	5.35	1C	
2	3	C	2.15	3C	
3		F	17.00	F	
4	1	R	1.42	1R	
5	1	R	1.72	1R	
6		F	18.82	F	
7	3	C	4.45	3C	
8	1	R	1.66	1R	
9		F	19.35	F	
10	3	R	0.78	3R	
11		F	20.89	F	
12		F	22.12	F	
13	2	C	2.72	2C	
14		F	16.99	F	
15	2	R	1.13	2R	
16		F	11.45	F	
17		F	16.49	F	
18	3	R	1.63	3R	
19	3	C	5.17	3C	
20	3	R	1.53	3R	
21	2	R	1.22	2R	
22	1	R	1.74	1R	
23	2	C	7.48	2C	
24	2	R	1.27	2R	
25	3	R	1.07	3R	
26	3	C	2.68	3C	
27	2	R	1.41	2R	
28	2	C	3.05	2C	
29	2	C	6.40	2C	
30		F	18.83	F	
31		F	17.99	F	
32		F	15.62	F	
33	2	R	1.22	2R	
34	1	R	1.40	1R	
35		F	39.67	F	
36	1	C	4.66	1C	
37		F	19.46	F	
38	1	C	5.81	1C	
39		F	22.76	F	
40	1	C	3.37	1C	
41	3	C	2.73	3C	
42	3	R	1.25	3R	
43	2	C	7.69	2C	
44		F	18.18	F	
45	1	C	3.02	1C	

Finish 2112

RANGE
1 700 feet
2 800 feet
3 900 feet

TYPE
R Run
C Crawl
F False

NOTES

INTRUSION SCHEDULE

DATE 12/8 SHIFT 1 SUPERVISOR RCS

TEST CONFIGURATION: HPS/Grass

#	RANGE	TYPE	INTRUDER
1	1	C	✓
2	1	R	✓
3		F	✓
4	2	R	✓
5	2	R	✓
6		F	✓
7	3	C	✓
8		F	✓
9	3	R	✓
10	3	R	✓
11	3	R	✓
12	2	C	✓
13	1	C	✓
14	1	R	✓
15	1	R	✓
16	3	C	✓
17	2	R	✓
18		F	✓
19	3	C	✓
20	3	R	✓
21	2	C	✓
22	1	C	✓
23	2	C	✓
24	3	C	✓
25		F	✓
26		F	✓
27	3	C	✓
28		F	✓
29	3	R	✓
30	2	C	✓
31		F	✓
32	1	R	✓
33		F	✓
34	2	C	✓
35	2	R	✓
36		F	✓
37		F	✓
38	1	C	✓
39	1	R	✓
40		F	✓
41		F	✓
42	2	R	✓
43		F	✓
44		F	✓
45	1	C	✓

RANGE
1 700 feet
2 800 feet
3 900 feet

TYPE
R Run
C Crawl
F False

NOTES
G 1 R
2 R
F
3 R
1 R
2 R
3 R
1 C
F
2 C

MONITOR TALLY SHEET

DATE 12-8-81 SHIFT 1 STATION CCTV

EL Tower Tom

OBSERVER EL MONITOR Tom

HPS GRASS

Start 18:14
End 18:56

	#	RANGE	TYPE	DETECTION TIME	VERIFY	RESULT
+3.57	1	1	C	1.37	+	1C
+1.74	2	1	R	0.98	+	1R
+	3		F	18.02	+	F
+1.44	4	2	R	0.95	+	2R
+1.43	5	2	R	0.64	+	2R
+	6		F	16.19	+	F
—	7	3	C	2.93	+	3C
+	8		F	16.04	+	F
+1.86	9	3	R	1.32	+	3R
+2.67	10	3	R	1.54	+	3R
+2.19	11	3	R	1.17	+	3R
+5.06	12	2	C	1.95	+	2C
+4.56	13	1	C	2.23	+	1C
+2.33	14	1	R	1.28	+	1R
+1.74	15	1	R	1.28	+	1R
+7.82	16	3	C	2.42	+	3C
+1.47	17	2	R	1.16	+	2R
+	18		F	—	—	—
+9.52	19	3	C	2.56	+	3C
+1.70	20	3	R	1.09	+	3R
+4.13	21	2	C	1.65	+	2C
+7.79	22	1	C	2.12	+	1C
+3.07	23	2	C	1.80	+	2C
+4.89	24	3	C	3.68	+	3C
+	25		F	11.00	+	F
+	26		F	12.48	+	F
+6.71	27	3	C	3.29	+	3C
+	28		F	15.76	+	F
+2.26	29	3	R	1.22	+	3R
+4.40	30	2	C	2.11	+	2C
+ ✓	31		F	21.88	+	F
+1.83	32	1	R	1.05	+	1R
+	33		F	16.56	+	F
+4.56	34	2	C	2.38	+	2C
+1.81	35	2	R	1.12	+	2R
+	36		F	17.26	+	F
+	37		F	17.46	+	F
+7.65	38	1	C	1.78	+	1C
+2.45	39	1	R	1.27	+	1R
+	40		F	15.94	+	F
+	41		F	14.20	+	F
+1.69	42	2	R	1.18	+	2R
+	43		F	16.45	+	F
+	44		F	19.26	+	F
+3.49	45	1	C	1.24	+	1C

RANGE

G 1 700 feet
2 800 feet
3 900 feet

TYPE

R Run
C Crawl
F False

NOTES

1R + 1.23
2R + 1.36
F + 15.25
3R + 1.02
1R + 1.33
2R + 1.08
3R + 1.43
1C + 2.43
F + 22.11
2C + 1.77

No False report

MONITOR TALLY SHEET

DATE 12/8/81 SHIFT 1 STATION Tower 6:07

OBSERVER Paul MONITOR RMA

HPS - Gross

Shift 6	#	RANGE	TYPE	DETECTION TIME	VERIFY	RESULT
1.65 1C	1	1	C	—	F	O
1.21 1R	2	1	R	2.93	1R	+
8.20 F	3	—	F	—	F	+
1.14 2R	4	2	R	1.77	2R	+
.98 2R	5	2	R	1.42	2R	+
7.11 F	6	—	F	24.33	2C	O
2.97 3C	7	3	C	—	F	O
10.12 F	8	—	F	—	F	+
1.34 3R	9	3	R	2.26	3R	+
1.78 3R	10	3	R	2.93	3R	+
1.62 3R	11	3	R	—	F	O
2.94 2C	12	2	C	7.98	1C	O
1.67 1C	13	1	C	—	F	O
1.18 1R	14	1	R	2.62	1R	+
1.15 1R	15	1	R	2.15	1R	+
2.76 3C	16	3	C	21.61	1C	O
.94 2R	17	2	R	1.74	2R	+
7.69 F	18	—	F	—	F	+
4.41 3C	19	3	C	—	F	O
1.24 3R	20	3	R	27.69	1C	O
1.78 2C	21	2	C	10.87	2C	+
2.24 1C	22	1	C	17.68	1C	+
2.00 2C	23	2	C	9.48	3C	O
2.71 3C	24	3	C	—	F	O
7.96 F	25	—	F	~~27.50~~	~~1C~~ F	O
9.18 F	26	—	F	27.50	~~F~~ 1C	O
3.33 3C	27	3	C	—	F	O
8.43 F	28	—	F	—	F	+
1.12 3R	29	3	R	9.26	~~2C~~ F	~~O+O~~
2.51 2C	30	2	C	9.26	2C	+
F [illegible]	31	2	F	—	F	+
1.22 1R	32	1	R	2.15	1R	+
9.21 F	33	—	F	—	F	+
1.73 2C	34	2	C	9.33	2C	+
1.17 2R	35	2	R	1.55	3R	O
8.85 F	36	—	F	—	F	+
11.81 F	37	—	F	—	F	+
1.79 1C	38	1	C	12.13	1C	+
1.17 1R	39	1	R	2.53	1R	+
9.62 F	40	—	F	19.29	1C	O
9.00 F	41	—	F	—	F	+
1.43 2R	42	2	R	1.68	2R	+
8.04 F	43	—	F	—	F	+
11.25 F	44	—	F	26.06	3C	O
1.98 1C	45	1	C	3.25	3R	O

RANGE
1 700 feet
2 800 feet
3 900 feet

TYPE
R Run
C Crawl
F False

NOTES
1R - 2.75 - 1R - +
2R - 1.78 - 2R - +
F - — F - +
3R - 2.31 - 3R - +
1R - 2.55 - 2R - O
2R - 1.82 - 2R - +
3R - 2.44 - 3R - +
1C - — F - O
F - F - +
2C - — — O

mine down 1#

Shift 6, P Clementine on TV, turn away between trials

IN.RUSION SCHEDULE

DATE 12/8 SHIFT 2 SUPERVISOR TWB

TEST CONFIGURATION: Grass/APS

#	RANGE	TYPE	INTRUDER
1	1	R	✓
2		F	✓
3	3	R	✓
4	2	C	✓
5	2	R	✓
6		F	✓
7	1	R	✓
8		F	✓
9	1	R	✓
10	2	C	✓
11	3	R	✓
12	3	R	✓
13	1	R	✓
14		F	✓
15	2	C	✓
16		F	✓
17		F	✓
18	2	R	✓
19	2	C	✓
20	2	R	✓
21		F	✓
22	1	C	✓
23		F	✓
24		F	✓
25	1	R	✓
26	3	C	✓
27	3	C	✓
28	2	R	✓
29		F	✓
30	2	R	✓
31	2	C	✓
32	1	C	✓
33		F	✓
34		F	✓
35	1	C	✓
36	1	C	✓
37		F	✓
38	3	C	✓
39		F	✓
40		F	✓
41	3	R	✓
42	3	C	✓
43	1	C	✓
44	3	R	✓
45	3	C	✓

RANGE
1 700 feet
2 800 feet
3 900 feet

TYPE
R Run
C Crawl
F False

NOTES
3C ✓
2R ✓
2C ✓
3R ✓
F ✓
1R ✓
2C ✓
F ✓
1R ✓
1C ✓

MONITOR TALLY SHEET

HPS 250 on 4 lanes

DATE 12-8-81 SHIFT 2 STATION Tower

OBSERVER E. Henry MONITOR DCS

shift 5 CCTV
shift 17
329
2213

HPS GRASS

Start 1923
Finish 1953

#	RANGE	TYPE	DETECTION TIME	VERIFY	RESULT
1	1	R	1.57	1R	1.50 1R +
2		F		F	6.74 F +
3	3	R	0.96	3R	1.56 3R +
4	2	C	2.94	2C	2.65 2C +
5	2	R	1.27	2R	1.60 2R +
6		F		F	9.25 F +
7	1	R	1.49	1R	1.64 1R +
8		F		F	9.03 F +
9	1	R	2.34	1R	1.90 1R +
10	2	C	2.48	2C	3.74 2C +
11	3	R	1.33	3R	1.52 3R +
12	3	R	1.51	3R	1.69 3R +
13	1	R	1.41	1R	2.16 1R +
14		F		F	7.65 F +
15	2	C	4.60	2C	10.05 2C +
16		F		F	9.33 F +
17		F		F	F 16.45 +
18	2	R	4.11	2R	2.79 2R +
19	2	C	5.03	2C	4.09 2C +
20	2	R	1.40	2R	2.10 2R +
21		F		F ~	34° F +
22	1	C	2.81	1C	1.66 1C +
23		F		F	12.83 F +
24		F		F	9.79 F +
25	1	R	1.60	1R	1.66 1R +
26	3	C	7.48	3C	5.55 3C +
27	3	C	3.31	3C	2.67 3C +
28	2	R	1.37	2R	1.56 2R +
29		F		F	5.71 F +
30	2	R	1.20	2R	1.38 2R +
31	2	C	4.07	2C	2.73 2C +
32	1	C	5.28	1C	6.77 1C +
33		F		F	9.79 F +
34		F		F	12.03 F +
35	1	C	3.59	1C	2.20 1C +
36	1	C	5.03	1C	2.79 1C +
37		F		F	9.09 F +
38	3	C	4.53	3C	4.52 3C +
39		F		F	16.35 F +
40		F		F	12.54 F +
41	3	R	1.21	3R	1.46 3R +
42	3	C	6.09	3C	3.92 3C +
43	1	C	6.55	1C	2.21 1C +
44	3	R	6.69	3R	1.91 3R +
45	3	C	5.10	3C	2.64 3C +

1923

RANGE
1 700 feet
2 800 feet
3 900 feet

TYPE
R Run
C Crawl
F False

NOTES
3C + 5.73
2R + 1.42
2C + 3.93
3R + 1.60
F +
1R + .96
2C + 3.60
F +
1R + 2.23
1C + 8.65

Inter. difference

Shift 5

stopped button early, probably add 2 seconds

MONITOR TALLY SHEET

DATE 12/8/81 SHIFT 2 STATION CCTV

OBSERVER Paul MONITOR RMA 19:23 19:53

	#	RANGE	TYPE	DETECTION TIME	VERIFY	RESULT
2.31 1R	1	1	R	1.12	1R	+
12.62 2C	2	–	F	8.94	F	+
—	3	3	R	0.76	3R	+
11.99 1C	4	2	C	1.55	2C	+
1.87 1R	5	2	R	1.24	2R	+
2.72 2R	6	–	F	8.47	F	+
2.76 1R	7	1	R	1.11	1R	+
14.04 2C	8	–	F	8.50	F	+
3.41 1R	9	1	R	2.05	1R	+
14.53 1C	10	2	C	2.09	2C	+
14.32 1C	11	3	R	1.23	3R	+
—	12	3	R	1.61	3R	+
2.53 1R	13	1	R	1.33	1R	+
13.64 2C	14	–	F	7.19	F	+
— 1C	15	2	C	1.57	2C	+
1F	16	–	F	7.61	F	+
26.55 SPW	17	–	F	9.48	F	+
—	18	2	R	0.87	2R	+
6.06 2C	19	2	C	1.65	2C	+
1R —	20	2	R	1.27	2R	+
7.79 —	21	–	F	13.45	F	+
1C *	22	1	C	1.53	1C	+
22.26 2C	23		F	12.30	F	+
F +	24		F	11.57	F	+
2.34 1R	25	1	R	1.08	1R	+
—	26	3	C	4.35	3C	+
14.3 1C	27	3	C	2.15	3C	+
1.69 1R	28	2	R	1.02	2R	+
2.57 2R	29	–	F	9.02	F	+
1.82 1R	30	2	R	0.79	2R	+
5.47 2C	31	2	C	1.95	2C	+
7.62 2C	32	1	C	2.22	1C	+
11.3 2C	33		F	10.10	F	+
21.69 2C	34		F	11.02	F	+
21.28 1C	35	1	C	1.45	1C	+
4.01 2R	36	1	C	2.06	1C	+
15.96 1C	37		F	16.39	F	+
—	38	3	C	3.39	3C	+
F	39		F	10.50	F	+
2.43 1R	40		F	9.74	F	+
—	41	3	R	0.94	3R	+
14.7 1C	42	3	C	2.08	3C	+
3.5 2R	43	1	C	2.80	1C	+
?	44	3	R	1.51	3R	+
11.44 2C	45	3	C	1.70	3C	+

Paul talks about getting eye test, glasses

RANGE
1 700 feet
2 800 feet
3 900 feet

TYPE
R Run
C Crawl
F False

NOTES
3C -5.45 - 3C - +
2R -1.04 - 2R - +
2C -2.65 - 2C - +
3R -1.54 - 3R - +
F - 10.84 - F - +
1R -0.73 - 1R - +
2C -1.30 - 2C - +
F - 11.81 - F - +
1R -1.71 - 1R - +
1C -1.66 - 1C - +

* no time

Note:
Dalmin left margin in P. Clementain on the tower, turning away from the zone between 44 & discovered that 45 was to be run. Don't know where the error is. RCS.

INTRUSION SCHEDULE

DATE 12/8 SHIFT 3 SUPERVISOR FMA

TEST CONFIGURATION: HPS/Grass

#	RANGE	TYPE	INTRUDER
1		F	✓
2	1	R	✓
3		F	✓
4		F	✓
5	3	R	✓
6	1	C	✓
7		F	✓
8		F	✓
9	2	R	✓
10	2	R	✓
11	1	C	✓
12		F	✓
13	1	C	✓
14	3	C	✓
15	2	C	✓
16	3	R	✓
17		F	✓
18	2	C	✓
19	2	C	✓
20	2	C	✓
21	1	R	✓
22		F	✓
23		F	✓
24	3	R	✓
25	2	R	✓
26		F	✓
27	1	C	✓
28	3	R	✓
29	1	C	✓
30	3	R	✓
31	3	C	✓
32	2	C	✓
33	1	R	✓
34	1	R	✓
35		F	✓
36		F	✓
37	3	C	✓
38	3	C	✓
39	2	R	✓
40		F	✓
41	2	R	✓
42	2	C	✓
43		F	✓
44		F	✓
45	1	R	✓

RANGE
1 700 feet
2 800 feet
3 900 feet

TYPE
R Run
C Crawl
F False

NOTES

MONITOR TALLY SHEET

DATE 12-8-81 SHIFT 3 STATION Tower START 8:21 End

OBSERVER Paul MONITOR Tom

HPS GRASS

#	RANGE	TYPE	DETECTION TIME	VERIFY	RESULT
1		F	4.04	—	2R
2	1	R	2.65	+	1R
3		F	21.97	—	2C
4		F		+	F
5	3	R	36.50	—	1C
6	1	C	—	—	—
7		F		+	F
8		F		+	F
9	2	R	1.58	—	1R
10	2	R	1.71	—	1R
11	1	C	9.45	+	1C
12		F	8.90	—	1C
13	1	C	19.76	—	2C
14	3	C	14.58	—	2C
15	2	C	—	—	—
16	3	R	—	—	—
17		F		+	F
✓ 18	2	C	11.89	+	2C
19	2	C	12.29	—	1C
20	3	C	—	—	—
21	1	R	2.46	+	1R
22		F	3.02	—	2R
23		F	13.93	—	1C
24	3	R	2.52	+	3R
25	2	R	1.78	+	2R
26		F		+	F
27	1	C	19.65	—	2C
28	3	R	3.70	+	3R
29	1	C	25.71	—	2C
30	3	R	16.97	—	2C
31	3	C	7.68	—	1C
32	2	C	10.60	+	2C
33	1	R	3.36	+	1R
34	1	R	2.58	+	1R
35		F	15.69	—	2C
36		F	13.66	—	1C
37	3	C	11.62	—	1C
38	3	C	16.27	—	2C
39	2	R	1.89	+	2R
40		F		+	F
41	2	R	1.62	+	2R
42	2	C	10.06	—	1C
43		F	9.93	—	2C
44		F		+	F
45	1	R	2.43	+	1R

RANGE
1 700 feet
2 800 feet
3 900 feet

TYPE
R Run
C Crawl
F False

NOTES

(SU)

Standing up at the fence

MONITOR TALLY SHEET

DATE 12/8/81 SHIFT 3 STATION TV

OBSERVER E. Henry HPS-Guard MONITOR RCS

Start 2021
Finish 2054

#	RANGE	TYPE	DETECTION TIME	VERIFY	RESULT
1	–	F	19.96	F	
2	1	R	1.08	1R	
3	–	F	12.08	F	
4	–	F	14.81	F	
5	3	R	1.60	3R	
6	1	C	1.58	1C	
7	–	F	25.58	F	
8	–	F	15.10	F	
9	2	R	0.90	2R	
10	2	R	.73	2R	
11	1	C	1.45	1C	
12	–	F	14.53	F	
13	1	C	1.80	1C	
14	3	C	3.52	3C	
15	2	C	1.74	2C	
16	3	R	1.74	3R	
17	–	F	17.09	F	
2021 18	2	C	3.04	2C	
19	2	C	1.73	2C	
20	3	C	2.87	3C	
21	1	R	1.09	1R	
22	–	F	15.64	F	
23	–	F	17.23	F	
24	3	R	1.41	3R	
25	2	R	1.35	2R	
26	–	F		F	
27	1	C	1.77	1C	
28	3	R	1.40	3R	
29	1	C	2.01	1C	
30	3	R	1.30	3R	
31	3	C	2.81	3C	
32	2	C	1.50	2C	
33	1	R	1.20	1R	
34	1	R	1.09	1R	
35	–	F	16.49	F	
36	–	F	11.40	F	
37	3	C	1.87	3C	
38	3	C	3.01	3C	
39	2	R	.98	2R	
40	–	F	23.04	F	
41	2	R	1.22	2R	
42	2	C	1.92	2C	
43	–	F	19.81	F	
44	–	F	19.78	F	
45	1	R	1.25	1R	

RANGE
1 700 feet
2 800 feet
3 900 feet

TYPE
R Run
C Crawl
F False

NOTES

INTRUSION SCHEDULE

DATE 12/8 SHIFT 4 SUPERVISOR RCS

TEST CONFIGURATION: HPS / Grass

#	RANGE	TYPE	INTRUDER
1		F	
2	3	C	
3	2	C	
4	2	R	
5	2	R	
6	3	C	
7	3	C	
8	3	R	
9		F	
10		F	
11		F	
12	1	R	
13		F	
14	2	C	
15		F	
16	3	C	
17	1	R	
18		F	
19	3	C	
20		F	
21	1	C	
22		F	
23	1	R	
24	3	R	
25		F	
26	2	R	
27	3	R	
28	3	R	
29	1	C	
30	2	R	
31	1	C	
32	1	R	
33	1	R	
34		F	
35	1	C	
36		F	
37	2	C	
38		F	
39	2	C	
40	3	R	
41		F	
42	1	C	
43		F	
44	2	C	
45	2	R	

RANGE
1 700 feet
2 800 feet
3 900 feet

TYPE
R Run
C Crawl
F False

NOTES

MONITOR TALLY SHEET

DATE 12-8-81 SHIFT 4 STATION Tower

OBSERVER [illegible] Henry MONITOR RMA

HPS Grass

#	RANGE	TYPE	DETECTION TIME	VERIFY	RESULT
1		F	—	F	+
2	3	C	9.82	3C	+
3	2	C	6.13	2C	+
4	2	R	1.54	2R	+
5	2	R	1.26	2R	+
6	3	C	6.46	3C	+
7	3	C	4.35	3C	+
8	3	R	1.65	3R	+
9		F	—	F	+
10		F	—	F	+
11	1	R	—	F	+
12	1	R	1.37	1R	+
13		F	—	F	+
14	2	C	6.14	2C	+
15		F	—	F	+
16	3	C	3.92	3C	+
17	1	R	1.74	1R	+
18		F	—	F	+
19	3	C	6.77	3C	+
20		F	—	F	+
21	1	C	3.31	1C	+
22		F	—	F	+
23	1	R	1.55	1R	+
24	3	R	1.81	3R	+
25		F	—	F	+
26	2	R	1.57	2R	+
27	3	R	1.81	3R	+
28	3	R	1.42	3R	+
29	1	C	4.14	1C	+
30	2	R	1.41	2R	+
31	1	C	4.43	1C	+
32	1	R	1.43	1R	+
33	1	R	1.64	1R	+
34		F	—	F	+
35	1	C	3.08	1C	+
36		F	—	F	+
37	2	C	4.24	2C	+
38		F	—	F	+
39	2	C	4.00	2C	+
40	3	R	1.78	3R	+
41		F	—	F	+
42	1	C	5.09	1C	+
43		F	—	F	+
44	2	C	8.14		
45	2	R	1.45	2R	+

RANGE
1 700 feet
2 800 feet
3 900 feet

TYPE
R Run
C Crawl
F False

NOTES

MONITOR TALLY SHEET

DATE 12/8/81 SHIFT 4 STATION CCTV

OBSERVER Paul MONITOR Tom

HPS - Grass

Very Windy

Start 9:14 End

#	RANGE	TYPE	DETECTION TIME	VERIFY	RESULT
1	-	F	11.79	+	F
2	3	C	3.37	+	3C
3	2	C	3.29	+	2C
4	2	R	1.27	+	2R
5	2	R	1.07	+	2R
6	3	C	4.08	+	3C
7	3	C	3.41	+	3C
8	3	R	1.57	+	3R
9	-	F	12.22	+	F
10	-	F	8.54	+	F
11	-	F	10.61	+	F
12	1	R	0.92	+	1R
13	-	F	10.57	+	F
14	2	C	1.87	+	2C
15	-	F	10.46	+	F
16	3	C	1.33	+	3C
17	1	R	1.42	+	1R
18	-	F	7.37	+	F
19	3	C	2.34	+	3C
20	-	F	9.36	+	F
21	1	C	1.72	+	1C
22	-	F	9.37	+	F
23	1	R	0.90	+	1R
24	3	R	1.62	+	3R
25	-	F	16.33	+	F
26	2	R	1.32	+	2R
27	3	R	1.57	+	3R
28	3	R	1.40	+	3R
29	1	C	3.25	+	1C
30	2	R	1.15	+	2R
31	1	C	1.75	+	1C
32	1	R	1.21	+	1R
33	1	R	1.16	+	1R
34	-	F	7.35	+	F
35	1	C	2.00	+	1C
36	-	F	10.78	+	F
37	2	C	2.2[illegible]	+	2C
38	-	F	12.56	+	F
39	2	C	2.[illegible]4	+	2C
40	3	R	1.67	+	3R
41	-	F	10.63	+	F
42	1	C	3.16	+	1C
43	-	F	10.09	+	F
44	2	C	1.79	+	2C
45	2	R	1.27	+	2R

RANGE
1 700 feet
2 800 feet
3 900 feet

delayed start.

TYPE
R Run
C Crawl
F False

NOTES

INTRUSION SCHEDULE

DATE 12-9-81 SHIFT 1 SUPERVISOR RMA

TEST CONFIGURATION: HPS/Gruss

#	RANGE	TYPE	INTRUDER
1	1	C	✓
2	1	R	✓
3	1	F	✓
4	2	R	✓
5	2	R	✓
6		F	✓
7	3	C	✓
8		F	✓
9	3	R	✓
10	3	R	✓
11	3	R	✓
12	2	C	✓
13	1	C	✓
14	1	R	✓
15	3	C	✓
16	2	R	✓
17		F	✓
18	3	C	✓
19	3	R	✓
20	2	C	✓
21	1	C	✓
22	2	C	✓
23	3	C	✓
24	3	C	✓
25		F	✓
26	2	R	✓
27	2	C	✓
28	1	C	✓
29		F	✓
30		F	✓
31	3	R	✓
32		F	✓
33		F	✓
34	1	R	✓
35		F	✓
36	1	R	✓
37	1	C	✓
38	1	F	✓
39		F	✓
40		F	✓
41		F	✓
42	2	C	✓
43		F	✓
44	2	R	✓
45		F	✓

RANGE

1 700 feet
2 800 feet
3 900 feet

TYPE

R Run
C Crawl
F False

NOTES

1C ✓
F ✓
2C ✓
1R ✓
2R ✓
F ✓
3R ✓
1R ✓
2R ✓
3R ✓

MONITOR TALLY SHEET

DATE 12-8-81 SHIFT 1 STATION TV no barrier 20 range 1

OBSERVER P. Clementsis MONITOR RCS

HPS Green

Start 1753
Finish 1818

#	RANGE	TYPE	DETECTION TIME	VERIFY	RESULT
1	1	R	1.43	1R	
2	1	R	1.68	1C	
3		F	8.20	F	
4	2	R	1.24	2R	
5	2	R	1.77	2R	
6		F	10.16	F	
7	3	C	3.69	3C	
8		F	8.78	F	
9	3	R	1.62	3R	
10	3	R	1.39	3R	
11	3	R	1.70	3R	
12	2	C	2.25	2C	
13	1	C	1.87	1C	
14	1	R	1.26	1R	
15	3	C	3.33	2C	
16	2	R	1.58	2R	
17		F	11.32	F	
18	3	C	3.63	3C	
19	3	R	1.35	3R	
20	2	C	2.50	2C	
21	1	C	1.62	1C	
22	2	C	1.62	2C	
23	3	C	3.10	3C	
24	3	C	3.17	3C	
25		F	10.54	F	
26	2	R	1.83	2R	
27	2	C	2.43	2R	
28	1	C	1.68	1C	
29		F	8.98	F	
30		F	10.00	F	
31	3	R	1.75	3R	
32		F	11.93	F	
33		F	8.71	F	
34	1	R	1.68	1R	
35		F	8.10	F	
36	1	R	1.53	R	
37	1	C	1.55	1C	
38	1	R	1.28	1R	
39		F	7.79	F	
40		F	9.34	F	
41		F	9.77	F	
42	2	C	1.81	2C	
43		F	8.70	F	
44	2	R	1.46	2R	
45		F	7.35	F	

RANGE
1 700 feet
2 800 feet
3 900 feet

TYPE
R Run
C Crawl
F False

NOTES
1C 1.92 +
F 8.71 +
2C 3.38 + high
1R 1.44 +
2R 1.42 +
F 8.97 +
3R 1.66 +
1R 1.37 +
2R 1.37 +
3R 1.68 +

MONITOR TALLY SHEET

DATE 12-9-81 SHIFT 1 STATION Tower

OBSERVER El Henry MONITOR TJB

#	RANGE	TYPE	DETECTION TIME	VERIFY	RESULT
1	1	CR	1.52	+	1R
2	1	RC	4.35	+	1C
3		F		+	F
4	2	R	1.51	+	2R
5	2	R	1.40	+	2R
6		F		+	F
7	3	C	5.47	+	3C
8		F		+	F
9	3	R	2.12	+	3R
10	3	R	1.71	+	3R
11	3	R	1.74	+	3R
12	2	C	5.81	+	2C
13	1	C	8.50	+	1C
14	1	R	1.70	+	1R
15	3	C	5.47	+	3C
16	2	R	1.62	+	2R
17		F		+	F
18	3	C	13.43	+	3C
19	3	R	1.82	+	3R
20	2	C	7.18	+	2C
21	1	C	3.67	+	1C
22	2	C	4.35	+	2C
23	3	C	5.07	+	3C
24	3	C	13.60	+	3C
25		F		+	F
26	2	R	1.53	+	2R
27	2	C	5.92	+	2C
28	1	C	3.38	+	1C
29		F		+	F
30		F		+	F
31	3	R	2.07	+	3R
32		F		+	F
33		F		+	F
34	1	R	1.75	+	1R
35		F		+	F
36	1	R	1.79	+	1R
37	1	C	6.43	+	1C
38	1	R	1.84	+	1R
39		F		+	F
40		F		+	F
41		F		+	F
42	2	C	2.47	+	2C
43		F		+	F
44	2	R	1.43	+	2R
45		F		+	F

RANGE
1 700 feet
2 800 feet
3 900 feet

TYPE
R Run
C Crawl
F False

NOTES
1C + 2.12
F +
2C + 6.81
1R + 1.66
2R + 1.39
F +
3R + 1.78
1R + 1.73
2R + 1.46
3R + 2.02

paper blowing in area

INTRUSION SCHEDULE

DATE 12-9-81 SHIFT 2 SUPERVISOR

TEST CONFIGURATION: HPS/Grass

#	RANGE	TYPE	INTRUDER
1	3	C	
2		F	
3	3	R	
4	3	C	
5	2	C	
6	3	R	
7	2	C	
8	3	R	
9	1	C	
10		F	
11	1	C	
12		F	
13		F	
14		F	
15		F	
16	3	R	
17		F	
18		F	
19	2	C	
20		F	
21	2	R	
22		F	
23	2	C	
24		F	
25		F	
26	2	R	
27	2	R	
28	1	C	
29	2	C	
30	2	C	
31	1	R	
32	1	C	
33		F	
34	3	C	
35	1	C	
36	1	R	
37	2	R	
38	1	R	
39	3	R	
40	1	R	
41	2	R	
42		F	
43		F	
44	3	C	
45	1	R	

RANGE
1 700 feet
2 800 feet
3 900 feet

TYPE
R Run
C Crawl
F False

NOTES
2R
3R
1R
F
1C
3C
2C
F
2C
1R

MONITOR TALLY SHEET

DATE 12-9-81 SHIFT 2 STATION Tower

OBSERVER P. Clementsi MONITOR RCB

#	RANGE	TYPE	DETECTION TIME	VERIFY	RESULT
1	3	C	3.6	3R	✓
2		F		F	
3	3	R	2.45	2R	✓
4	3	C		—	✓
5	2	C	3.55	2R	✓
6	3	R		—	✓
7	2	C	14.75	1C	✓
8	3	R	13.72	2C	✓
9	1	C		—	✓
10		F	10.48	1C	✓
11	1	C		—	✓
12		F	24.37	1C	✓
13		F		F	
14		F		F	
15		F	14.79	1C	✓
16	3	R	2.38	1R	✓
17		F	13.17	3C	✓
18		F		F	
19	3	C		—	✓
20		F	4.24	1C	✓
21	2	R	1.74	1R	✓
22		F		F	
23	2	C	10.66	1C	✓
24		F	13.01	1C	✓
25		F		F	
26	2	R	2.0	1R	✓
27	2	R	1.92	1R	✓
28	1	C		—	✓
29	2	C	5.11	3R	✓
30	2	C	10.77	1C	✓
31	1	R	3.28	1R	
32	1	C		—	✓
33		F	16.09	2C	✓
34	3	C		—	✓
35	1	C	2.89	2R	✓
36	1	R	2.23	1R	
37	2	R	1.98	1R	✓
38	1	R	2.02	1R	
39	3	R	2.53	1R	✓
40	1	R	2.08	1R	
41	2	R	1.99	1R	
42		F		F	
43		F		F	
44	3	C	—		✓
45	1	R	2.31	1R	

RANGE
1 700 feet
2 800 feet
3 900 feet

TYPE
R Run
C Crawl
F False

NOTES
2R 2.1 1R ✓
3R 2.48 2R ✓
1R 2.23 1R+
F 23.4 1C ✓
1C 16.33 2C ✓
3C — ✓
2C 18.86 3C ✓
F 3.08 3R ✓
2C 10.3 2C+
1R 2.82 1R+

MONITOR TALLY SHEET

DATE 12-9-81 SHIFT 2 STATION CCTV

OBSERVER [illegible] MONITOR RMA 0:35 7:20

#	RANGE	TYPE	DETECTION TIME	VERIFY	RESULT
1	3	C	2.60	3C	+
2		F	18.54	F	+
3	3	R	1.53	3R	+
4	3	C	1.99	3C	+
5	2	C	2.05	2C	+
6	3	R	1.54	3R	+
7	2	C	1.96	2C	+
8	3	R	1.24	3R	+
9	1	C	1.90	1C	+
10		F	15.61	F	+
11	1	C	1.85	1C	+
12		F	19.83	F	+
13		F	15.37	F	+
14		F	12.02	F	+
15		F	22.91	F	+
16	3	R	1.63	3R	+
17		F	21.91	F	+
18		F	19.16	F	+
19	3	C	2.64	3C	+
20		F	19.12	F	+
21	2	R	1.57	2R	+
22		F	18.79	F	+
23	2	C	2.13	2C	+
24		F	26.95	F	+
25		F	15.18	F	+
26	2	R	1.73	2R	+
27	2	R	1.20	2R	+
28	1	C	2.29	1C	+
29	2	C	2.51	2C	+
30	2	C	1.61	2C	+
31	1	R	2.10	1R	+
32	1	C	1.96	1C	+
33		F	15.52	F	+
34	3	C	2.86	3C	+
35	1	C	1.72	1C	+
36	1	R	1.52	1R	+
37	2	R	1.48	2R	+
38	1	R	1.31	1R	+
39	3	R	1.46	3R	+
40	1	R	1.40	1R	+
41	2	R	1.43	2R	+
42		F	10.77	F	+
43		F	11.78	F	+
44	3	C	2.78	3C	+
45	1	R	1.23	1R	+

Start

RANGE
1 700 feet
2 800 feet
3 900 feet

TYPE
R Run
C Crawl
F False

NOTES

2R	1.76	2R	+
3R	1.72	3R	+
1R	1.55	1R	+
F	11.18	F	+
1C	1.18	1C	+
3C	2.52	3C	+
2C	2.32	2C	+
F	21.83	F	+
2C	2.52	2C	+
1R	1.53	1R	+

INTRUSION SCHEDULE

DATE 12-9-81 SHIFT 3 SUPERVISOR RCS

TEST CONFIGURATION: HPS/Grass

#	RANGE	TYPE	INTRUDER
1	1	C	
2	3	R	
3	3	C	
4	3	R	
5		F	
6	1	C	
7	1	C	
8	2	R	
9		F	
10		F	
11	2	C	
12		F	
13		F	
14		F	
15	2	R	
16	2	C	
17	1	R	
18		F	
19	3	R	
20	3	C	
21	1	R	
22		F	
23	2	C	
24		F	
25	3	C	
26		F	
27	2	C	
28	2	R	
29		F	
30	3	C	
31		F	
32	2	C	
33	1	R	
34		F	
35	1	R	
36	3	C	
37		F	
38	2	R	
39	1	R	
40	3	R	
41	2	R	
42	1	C	
43	1	C	
44	3	R	
45		F	

RANGE
1 700 feet
2 800 feet
3 900 feet

TYPE
R Run
C Crawl
F False

NOTES

MONITOR TALLY SHEET

DATE 12-9-81 SHIFT 7 STATION CCTV

OBSERVER Paul MONITOR Tom

HPS Grass

Start 7:33
End 8:09

#	RANGE	TYPE	DETECTION TIME	VERIFY	RESULT
1	1	C	2.04	+	1C
2	3	R	1.46	+	3R
3	3	C	3.26	+	3C
4	3	R	1.40	+	3R
5		F	7.47	+	F
6	1	C	1.58	+	1C
7	1	C	1.70	+	1C
8	2	R	1.44	+	2R
9		F	9.33	+	F
10		F	8.97	+	F
11	2	C	1.70	+	2C
12		F	8.23	+	F
13		F	13.05	+	F
14		F	9.93	+	F
15	2	R	1.40	+	2R
16	2	C	2.81	+	2C
17	1	R	1.58	+	1R
18		F	9.00	+	F
19	3	R	1.45	+	3R
20	3	C	3.97	+	3C
21	1	R	1.26	+	1R
22		F	7.42	+	F
23	2	C	2.83	+	2C
24		F	8.86	+	F
25	3	C	2.88	+	3C
26		F	10.67	+	F
27	2	C	2.27	+	2C
28	2	R	1.57	+	2R
29		F	8.57	+	F
30	3	C	2.93	+	3C
31		F	8.01	+	F
32	2	C	3.00	+	2C
33	1	R	1.24	+	1R
34		F	8.71	+	F
35	1	R	1.44	+	1R
36	3	C	2.29	+	3C
37		F	7.02	+	F
✓ 38	2	R	1.69	+	2R
39	1	R	1.28	+	1R
40	3	R	1.36	+	3R
41	2	R	1.58	+	2R
42	1	C	1.66	+	1C
43	1	C	1.64	+	1C
44	3	R	1.46	+	3R
45		F	8.24	+	F

RANGE
1 700 feet
2 800 feet
3 900 feet

TYPE
R Run
C Crawl
F False

NOTES

MONITOR TALLY SHEET

DATE 12-9-81 SHIFT 3 STATION Tower

OBSERVER el Henry MONITOR RMA 7:40 8:10

#	RANGE	TYPE	DETECTION TIME	VERIFY	RESULT
1	1	C	2.43	1C	+
2	3	R	1.45	3R	+
3	3	C	11.72	3C	+
4	3	R	1.37	3R	+
5		F	—	F	+
6	1	C	2.20	1C	+
7	1	C	2.83	1C	+
8	2	R	1.67	2R	+
9		F	—	F	+
10		F	—	F	+
11	2	C	4.78	2C	+
12		F	—	F	+
13		F	—	F	+
14		F	—	F	+
15	2	R	1.60	2R	+
16	2	C	3.65	2C	+
17	1	R	1.37	1R	+
18		F	—	F	+
19	3	R	1.87	3R	+
20	3	C	4.65	3C	+
21	1	R	1.39	1R	+
22		F	—	F	+
23	2	C	4.92	2C	+
24		F	—	F	+
25	3	C	3.79	3C	+
26		F	—	F	+
27	2	C	6.86	2C	+
28	2	R	1.62	2R	+
29		F	—	F	+
30	3	C	5.79	3C	+
31		F	—	F	+
32	2	C	4.68	2C	+
33	1	R	1.45	1R	+
34		F	—	F	+
35	1	R	1.51	1R	+
36	3	C	5.95	3C	+
37		F	—	F	+
38	2	R	1.68	2R	F
39	1	R	1.42	1R	+
40	3	R	1.77	3R	+
41	2	R	1.51	2R	F
42	1	C	4.86	1C	+
43	1	C	2.09	1C	+
44	3	R	1.92	3R	+
45		F	—	F	+

start

RANGE
1 700 feet
2 800 feet
3 900 feet

TYPE
R Run
C Crawl
F False

NOTES

INTRUSION SCHEDULE

DATE 12-9-81 SHIFT 4 SUPERVISOR RMA

TEST CONFIGURATION: HPS - Grass

#	RANGE	TYPE	INTRUDER
1	3	R	✓
2	1	C	✓
3	1	R	✓
4	3	R	✓
5	3	C	✓
6		F	✓
7	1	C	✓
8		F	✓
9	3	C	✓
10		F	✓
11		F	✓
12	1	R	✓
13	2	C	✓
14	3	C	✓
15	2	C	✓
16		F	✓
17	1	R	✓
18	2	R	✓
19	1	R	✓
20		F	✓
21	2	R	✓
22	2	C	✓
23		F	✓
24	2	R	✓
25	2	R	✓
26	3	C	✓
27		F	✓
28	2	R	✓
29	1	R	✓
30		F	✓
31		F	✓
32	3	R	✓
33		F	✓
34		F	✓
35		F	✓
36	2	C	✓
37		F	✓
38	2	C	✓
39		F	✓
40	1	C	✓
41	3	C	✓
42	1	C	✓
43	1	C	✓
44	3	R	✓
45	3	R	✓

RANGE
1 700 feet
2 800 feet
3 900 feet

TYPE
R Run
C Crawl
F False

NOTES

MONITOR TALLY SHEET

DATE 12-9-81 SHIFT 4 STATION TV

OBSERVER E. Henry MONITOR RCS

#	RANGE	TYPE	DETECTION TIME	VERIFY	RESULT
1	3	R	1.37	3R	
2	1	C	1.70	1C	
3	1	R	1.45	1R	
4	3	R	1.84	3R	
5	3	C	2.47	3C	
6		F	16.03	F	
7	1	C	2.17	1C	
8		F	19.06	F	
9	3	C	4.43	3C	
10		F	20.42	F	
11		F	27.55	F	
12	1	R	1.21	1R	
13	2	C	3.02	2C	
14	3	C	4.13	3C	
15	2	C	3.31	2C	
16		F	13.58	F	
17	1	R	1.24	1R	
18	2	R	1.36	2R	
19	1	R	1.20	1R	
20		F	18.37	F	
21	2	R	1.15	2R	
22	2	C	1.64	2C	
23		F	13.62	F	
24	2	R	1.46	2R	
25	2	R	1.33	2R	
26	3	C	4.05	3C	
27		F	20.59	F	
28	2	R	1.44	2R	
29	1	R	1.30	1R	
30		F	19.26	F	
31		F	21.15	F	
32	3	R	1.86	3R	
33		F	34.13	F	
34		F	18.39	F	
35		F	16.94	F	
36	2	C	1.98	2C	
37		F	24.01	F	
38	2	C	2.85	2C	
39		F	12.78	F	
40	1	C	1.48	1C	
41	3	C	3.36	3C	
42	1	C	4.34	1C	-looking before alarm
43	1	C	2.27	1C	
44	3	R	1.36	3R	
45	3	R	1.88	3R	

RANGE
1 700 feet
2 300 feet
3 900 feet

TYPE
R Run
C Crawl
F False

NOTES

MONITOR TALLY SHEET

DATE 12-9-81 SHIFT 4 STATION Tower

OBSERVER Paul MONITOR Tom

Start 8:55

#	RANGE	TYPE	DETECTION TIME	VERIFY	RESULT
1	3	R	16.87	—	1C
2	1	C	14.83	—	2C
3	1	R	1.73	+	1R
4	3	R	2.67	—	1R
5	3	C	18.33	—	1C
6		F		+	F
7	1	C	—	—	—
8		F	15.42	—	3C
9	3	C	4.99	—	2R
10		F		+	F
11		F	13.63	—	1C
12	1	R	2.27	+	1R
13	2	C	18.15	+	2C
14	3	C	—	—	—
15	2	C	12.20	+	2C
16		F		+	F
17	1	R	2.62	+	1R
18	2	R	1.51	—	1R
19	1	R	3.09	—	2R
20		F	33.17	—	3C
21	2	R	1.85	—	1R
22	2	C	2.31	—	2R
23		F	17.57	—	1C
24	2	R	—	—	—
25	2	R	8.60	—	1C
25	3	C	34.20	—	1C
27		F		+	F
28	2	R	1.60	—	1R
29	1	R	2.30	+	1R
30		F		+	F
31		F		+	F
32	3	R	2.45	+	1R
33		F		+	F
34		F		+	F
35		F		+	F
36	2	C	8.89	—	1C
37		F		+	F
38	2	C	11.29	—	1C
39		F		+	F
40	1	C	14.93	—	2C
41	3	C	—	—	—
42	1	C	10.69	—	3C
43	1	C	—	—	—
44	3	R	3.49	—	1R
45	3	R	3.05	—	2R

RANGE
1 700 feet
2 800 feet
3 900 feet

TYPE
R Run
C Crawl
F False

NOTES

INTRUSION SCHEDULE

DATE 12/10/81 SHIFT 1 SUPERVISOR TJB

TEST CONFIGURATION: HPS/Rocks

#	RANGE	TYPE	INTRUDER
1	3	R	
2	3	R	
3	1	C	
4	2	C	
5		F	
6		F	
7	1	C	
8		F	
9	2	C	
10	3	R	
11		F	
12	2	R	
13	1	R	
14		F	
15	2	C	
16		F	
17	1	R	
18	2	C	
19	2	R	
20		F	
21	3	R	
22		F	
23	2	R	
24	1	R	
25	1	C	
26		F	
27	1	R	
28		F	
29	1	R	
30	3	C	
31		F	
32	3	R	
33	3	R	
34		F	
35	3	C	
36		F	
37	2	R	
38		F	
39	3	C	
40		F	
41	3	C	
42	1	C	
43	1	C	
44	2	C	
45	3	C	

RANGE
1 700 feet
2 800 feet
3 900 feet

TYPE
R Run
C Crawl
F False

NOTES

F
1R
3R
F
1C
2R
3C
2R
3C
2C

MONITOR TALLY SHEET

DATE 12/10/81 SHIFT 1 STATION Hawes

OBSERVER Paul MONITOR RMA

#	RANGE	TYPE	DETECTION TIME	VERIFY	RESULT
1	3	R	2.16	3R	+
2	2	R	2.07	2R	+
Start → 3	1	C	12.53	1C	+
4	2	C	5.65	2C	+
5		F	—	F	+
6		F	—	F	+
7	1	C	10.61	1C	+
8		F	—	F	+
9	2	C	8.02	2C	+
10	3	R	2.33	3R	+
11		F	—	F	+
12	2	R	2.23	2R	+
13	1	R	2.46	1R	+
14		F	—	F	+
15	2	C	6.86	2C	+
16		F	—	F	+
17	1	R	2.25	1R	+
18	2	C	6.97	2C	+
19	2	R	1.84	2R	+
20		F	—	F	+
21	3	R	2.56	3R	+
22		F	—	F	+
23	2	R	47.18	2R	+
24	1	R	2.24	1R	+
25	1	C	2.60	3R	⊙
26		F	—	F	+
27	1	R	2.45	1R	+
28		F	—	F	+
29	1	R	2.43	1R	+
30	3	C	8.13	3C	+
31		F	—	F	+
32	3	R	2.28	3R	+
33	3	R	2.56	3R	+
34		F	—	F	+
35	3	C	6.24	3C	+
36		F	—	F	+
37	2	R	1.99	2R	+
38		F	—	F	+
39	3	C	7.10	3C	+
40		F	—	F	+
41	3	C	6.80	3C	+
42	1	C	14.92	1C	+
43	1	C	—	F	⊙
44	2	C	52.92	2C	+
45	3	C	7.07	3C	+

RANGE
1 700 feet
2 800 feet
3 900 feet

TYPE
R Run
C Crawl
F False

NOTES
F – 2R ⊖
1R – 2.47 – 1R +
3R – 2.74 – 3R – +
F – 3C – ⊖
1C – 11.92 – 1C – +
2R – 2.24 – 2R +
3C ——— ⊙
2R – 2.13 – 2R – +
3C – 10.70 – 3C – +
2C – 6.71 – 2C – +

} – 45.12

– shadows at 3 caused by wind?

45.20 } subtract

MONITOR TALLY SHEET

DATE 12-10-81 SHIFT 1 STATION TV

OBSERVER E Henry MONITOR PRS

HPS - ROCKS

#	RANGE	TYPE	DETECTION TIME	VERIFY	RESULT
1	3	R	1.68	~~3R~~	
2	2	R	1.74	2R	
3	1	C	2.09	1C	
4	2	C	1.80	2C	
5		F	21.62	F	
6		F	27.00	F	
7	1	C	1.83	1C	
8		F	22.10	F	
9	2	C	2.38	2C	
10	3	R	1.64	3R	
11		F	17.93	F	
12	2	R	1.58	2R	
13	1	R	1.63	1R	
14		F	27.21	F	
15	2	C	2.02	2C	
16		F	14.56	F	
17	1	R	.70	1R	
18	2	C	1.86	2C	
19	2	R	1.23	2R	
20		F	14.62	F	
21	3	R	1.74	3R	
22		F	20.34	F	
23	2	R		2R	
24	1	R	1.49	1R	
25	1	C	3.08	1C	
26		F	38.11	F	
27	1	R	1.66	1R	
28		F	13.48	F	
29	1	R	2.03	1R	
30	3	C	2.83	3C	
31		F	14.37	F	
32	3	R	1.58	3R	
33	3	R	1.76	3R	
34		F	13.91	F	
35	3	C	2.72	3C	
36		F	20.61	F	
37	2	R	2.50	2R	
38		F	15.90	F	
39	3	C	2.38	3C	
40		F	12.88	F	
41	3	C	3.02	3C	
42	1	C	4.29	1C	
43	1	C	3.17	1C	
44	2	C	6.01	2C	
45	3	C	3.26	3C	

start

RANGE
1 700 feet
2 800 feet
3 900 feet

TYPE
R Run
C Crawl
F False

NOTES
F
1R 2.23 +
3R 1.73 +
F 17.18 +
1C 1.32 +
2R 1.54 +
3C 1.90 +
2R 1.41 +
3C 2.12 +
timer not reset 2C 1.86 +

moved chair forward

Apparently starts scan at 3 and moves in toward 1

INTRUSION SCHEDULE

DATE 12/10 SHIFT 2 SUPERVISOR RRS

TEST CONFIGURATION: HPS/Rocks

#	RANGE	TYPE	INTRUDER
G 1	2	R	
2		F	
3	2	R	
4		F	
5	1	C	
6		F	
7	1	R	
8	2	R	
9	2	R	
10		F	
11		F	
12	1	R	
13	3	R	
14	3	C	
15	2	C	
16	2	R	
17	1	C	
18		F	
19		F	
20		F	
21	1	R	
22	3	C	
23	3	R	
24	3	R	
25	3	R	
26	2	C	
27		F	
28	2	C	
29	2	C	
30	1	C	
31		F	
32	3	C	
33		F	
34		F	
35	3	R	
36	1	C	
37	1	R	
38	3	C	
39	2	C	
40	1	R	
41		F	
42		F	
43		F	
44	1	C	
45	3	C	

RANGE
1 700 feet
2 800 feet
3 900 feet

TYPE
R Run
C Crawl
F False

NOTES G. 3 C
F
3 C
F
1 C
2 C
1 R
3 R
3 R
2 R

MONITOR TALLY SHEET

DATE 12-10-81 SHIFT 2 STATION CCTV 1925

OBSERVER Paul MONITOR RMA

HPS ROCKS

#	RANGE	TYPE	DETECTION TIME	VERIFY	RESULT
1	2	R	1.63	2R	+
2		F	7.43	F	+
3	2	R	1.36	2R	+
4		F	8.35	F	+
5	1	C	1.70	1C	+
6		F	7.88	F	+
7	1	R	1.46	1R	+
8	2	R	1.48	2R	+
9	2	R	1.83	2R	+
shot → 10		F	8.02	F	+
11		F	7.16	F	+
12	1	R	1.20	1R	+
13	3	R	1.70	3R	+
14	3	C	2.08	3C	+
15	2	C	1.72	2C	+
16	2	R	1.44	2R	+
17	1	C	1.87	1C	+
18		F	9.55	F	+
19		F	8.68	F	+
20		F	10.85	F	+
21	1	R	1.43	1R	+
22	3	C	2.83	3C	+
23	3	R	1.45	3R	+
24	3	R	1.85	3R	+
25	3	R	1.26	3R	+
26	2	C	2.04	2C	+
27		F	8.35	F	+
28	2	C	2.39	2C	+
29	2	C	3.14	2C	+
30	1	C	1.91	1C	+
31		F	9.77	F	+
32	3	C	3.55	3C	+
33		F	9.70	F	+
34		F	8.40	F	+
35	3	R	2.38	3R	+
36	1	C	3.06	1C	+
37	1	R	1.40	1R	+
38	3	C	2.54	3C	+
39	2	C	2.88	2C	+
40	1	R	1.38	1R	+
41		F	7.74	F	+
42		F	9.30	F	+
43		F	8.19	F	+
44	1	C	3.54	1C	+
45	3	C	2.46	3C	+

RANGE
1 700 feet
2 800 feet
3 900 feet

TYPE
R Run
C Crawl
F False

NOTES

3C -1.85- 3C - +
F -6.79 - F - +
3C -3.48 - 3C - +
F -10.00 - F - +
1C -1.52 - 1C - +
2C -2.54 - 2C - +
1R -1.41 - 1R - +
3R -1.67 - 3R +
3R -1.30 - 3R +
2R -1.41 2R +

MONITOR TALLY SHEET

DATE 12/10/81 SHIFT 2 STATION [illegible]

OBSERVER EL MONITOR [illegible]

HPS Rocks

#	RANGE	TYPE	DETECTION TIME	VERIFY	RESULT
1	2	R	1.4[illegible]	+	2R
2		F		+	F
3	2	R	1.80	+	2R
4		F		+	F
5	1	C	6.13	+	1C
6		F		+	F
7	1	R	2.06	+	1R
8	2	R	1.66	+	2R
9	2	R	2.02	+	2R
✓ 10		F		+	F
11		F		+	F
12	1	R	1.94	+	1R
13	3	R	2.01	+	3R
14	3	C	3.66	+	3C
15	2	C	4.64	+	2C
16	2	R	1.15	+	2R
17	1	C	10.20	+	1C
18		F		+	F
19		F		+	F
20		F		+	F
21	1	R	1.87	+	1R
22	3	C	5.97	+	3C
23	3	R	1.52	+	3R
24	3	R	1.87	+	3R
25	3	R	1.46	+	3R
26	2	C	6.33	+	2C
27		F		+	F
28	2	C	5.91	+	2C
29	2	C	6.30	+	2C
30	1	C	7.22	+	1C
31		F		+	F
32	3	C	5.50	+	3C
33		F		+	F
34		F		+	F
35	3	R	5.12	+	3R — Delayed Start —
36	1	C	8.72	+	1C
37	1	R	2.55	+	1R
38	3	C	6.11	+	3C
39	2	C	6.34	+	2C
40	1	R	2.19	+	1R
41		F		+	F
42		F		+	F
43		F		+	F
44	1	C	9.68	+	1C
45	3	C	6.28	+	3C

RANGE
1 [illegible] feet
2 [illegible] feet
3 [illegible] feet

TYPE
R [illegible]
C Crawl
F False

NOTES
3C + 4.03
F +
3C + 8.44
F +
1C + 6.29
2C + 6.91
1R + 1.98
3R + 1.92
3R + 1.62
2R + 1.81

INTRUSION SCHEDULE

DATE 12/10 SHIFT 3 SUPERVISOR R MA

TEST CONFIGURATION: HPS/Rocks

#	RANGE	TYPE	INTRUDER
1	1	R	✓
2		F	✓
3		F	✓
4	3	R	✓
5	1	R	✓
6		F	✓
7	5	R	✓
→ 8		F	✓
9		F	✓
10	3	R	✓
11		F	✓
12	3	R	✓
13	1	C	✓
14		F	✓
15	2	C	✓
16	3	C	✓
17	3	R	✓
18	1	R	✓
19	2	R	✓
20	2	C	✓
21	1	C	✓
22		F	✓
23		F	✓
24	3	C	✓
25	3	C	✓
26	2	R	✓
27	1	C	✓
28	3	C	✓
29	2	C	✓
30		F	✓
31		F	✓
32	2	C	✓
33		F	✓
34	2	R	✓
35		F	✓
36	2	R	✓
37	1	C	✓
38	1	C	✓
39	1	R	✓
40	2	C	✓
41		F	
42		F	✓
43	3	C	✓
44	2	R	✓
45	1	R	✓

RANGE
1 700 feet
2 800 feet
3 900 feet

TYPE
R Run
C Crawl
F False

NOTES

MONITOR TALLY SHEET

DATE 12/11/81 SHIFT 3 STATION Tower

OBSERVER P Clementsia MONITOR RCS
HYS/Roche

#	RANGE	TYPE	DETECTION TIME	VERIFY	RESULT
1	1	R	2.37	1R	
2		F		F	
3		F		F	
4	3	R	—	—	↘
5	1	R	1.70	1R	
6		F		F	
7	3	R	—	—	↘
8		F		F	
9		F		F	
10	3	R	2.25	3R	
11		F		F	
12	3	R		—	↘
13	1	C	6.36	3C	↘
14		F		F	
15	2	C	6.26	2C	
16	3	C	11.6	3C	
17	3	R	2.88	3R	
18	1	R	2.21	1R	
19	2	R	1.74	2R	
20	2	C	6.36	2C	
21	1	C	—	—	↘
22		F		F	
23		F	12.59	1C	↘
24	3	C	6.24	3C	
25	3	C	7.51	3C	
26	2	R	1.63	2R	
27	1	C	11.35	1C	
28	3	C	14.29	3C	
29	2	C	7.63	2C	
30		F		F	
31		F		F	
32	2	C	8.96	2C	
33		F		F	
34	2	R	1.76	2R	
35		F		F	
36	2	R	1.44	2R	
37	1	C	—	—	↘
38	1	C	8.17	1C	
39	1	R	2.18	1R	
40	2	C	8.20	2C	
41		F		F	
42		F		F	
43	3	C	6.21	3C	
44	2	R	1.46	2R	
45	1	R	2.36	1R	

RANGE
1 700 feet
2 300 feet
3 900 feet

TYPE
R Run
C Crawl
F False

NOTES

thought he saw him
didn't wait to guess

MONITOR TALLY SHEET

DATE 12-10-81 SHIFT 3 STATION CCTV

OBSERVER El MONITOR Jan

HPS/ROCKS

#	RANGE	TYPE	DETECTION TIME	VERIFY	RESULT
1	1	R	1.48	+	1R
2		F	7.28	+	F
3		F	14.15	+	F
4	3	R	1.88	+	3R
5	1	R	1.49	+	1R
6		F	10.31	+	F
7	3	R	1.69	+	3R
Start 8		F	18.31	+	F
9		F	29.24	+	F
10	3	R	1.60	+	3R G
11		F	23.90	+	F
12	3	R	1.77	+	3R
13	1	C	1.96	+	1C
14		F	14.82	+	F
15	2	C	3.91	+	2C
16	3	C	2.47	+	3C
17	3	R	1.78	+	3R
18	1	R	1.56	+	1R
19	2	R	1.62	+	2R
20	2	C	2.86	+	2C
21	1	C	3.04	+	1C
22		F	25.46	+	F
23		F	20.53	+	F
24	3	C	2.27	+	3C
25	3	C	3.43	+	3C
26	2	R	1.40	+	2R
27	1	C	3.17	+	1C
28	3	C	2.76	+	3C
29	2	C	2.60	+	2C
30		F	13.58	+	F
31		F	10.45	+	F
32	2	C	2.96	+	2C
33		F	14.38	+	F
34	2	R	1.81	+	2R
35		F	25.92	+	F
36	2	R	1.30	+	2R
37	1	C	2.21	+	1C
38	1	C	4.01	+	1C
39	1	R	1.75	+	1R
40	2	C	2.48	+	2C
41		F	10.02	+	F
42		F	13.35	+	F
43	3	C	3.18	+	3C
44	2	R	1.80	+	2R
45	1	R	1.82	+	1R

RANGE
1 700 feet
2 800 feet
3 900 feet

TYPE
R Run
C Crawl
F False

NOTES Long F times for El probably attributable to Dick talking to him earlier about peeping.
Cold, windy snow flurries.

INTRUSION SCHEDULE

DATE 12/10/81 SHIFT 4 SUPERVISOR

TEST CONFIGURATION: HPS/rocks

#	RANGE	TYPE	INTRUDER
1	2	C	✓
2	1	C	
3	2	C	✓
4		F	✓
5	1	R	✓
6	3	R	✓
7	2	R	✓
8	2	C	✓
9		F	
10		F	
11	1	R	
12	1	C	✓
13	2	C	✓
14	3	R	✓
15	1	C	✓
16		F	
17	2	R	✓
18		F	✓
19		F	✓
20	2	R	✓
21		F	✓
22	3	R	✓
23		F	✓
24	1	R	✓
25	3	C	✓
26	2	R	✓
27	3	R	✓
28	1	C	✓
29	3	C	✓
30		F	✓
31		F	✓
32	3	R	✓
33		F	✓
34		F	✓
35	3	C	✓
36	1	R	✓
37		F	✓
38		F	✓
39	3	C	✓
40		F	✓
41	2	R	✓
42	2	C	✓
43	1	C	✓
44	1	R	✓
45	3	C	✓

RANGE
1 700 feet
2 800 feet
3 900 feet

TYPE
R Run
C Crawl
F False

NOTES

MONITOR TALLY SHEET

DATE 12-10-81 SHIFT 4 STATION TV

OBSERVER PC MONITOR RCS

HPS/ROCKS

start 2101

#	RANGE	TYPE	DETECTION TIME	VERIFY	RESULT
1	2	C	1.61	2C	
2	1	C	1.60	1C	
3	2	C	2.13	2C	
4		F	7.85	F	
5	1	R	1.45	1R	
6	3	R	1.50	3R	
7	2	R	1.63	2R	
8	2	C	2.18	2C	
9		F	9.05	F	
10		F	9.45	F	
11	1	R	1.45	1R	
12	1	C	1.25	1C	
13	2	C	2.64	2C	
14	3	R	1.59	3R	
15	1	C	2.61	1C	
16		F	9.03	F	
17	2	R	1.74	2R	
18		F	8.52	F	
19		F	8.90	F	
20	2	R	1.81	2R	
21		F	7.14	F	
22	3	R	1.61	3R	
23		F	9.48	F	
24	1	R	1.26	1R	
25	3	C	3.20	3C	
26	2	R	1.49	2R	
27	3	R	1.70	3R	
28	1	C	1.98	1C	
29	3	C	3.74	3C	
30		F	6.60	F	
31		F	8.42	F	
32	3	R	1.61	3R	1.52 1R
33		F	8.98	F	
34		F	8.19	F	
35	3	C	3.32	3C	
36	1	R	1.41	1R	
37		F	7.96	F	
38		F	8.97	F	
39	3	C	11.96?	3C	timer reset?
40		F	8.13	F	
41	2	R	1.32	2R	
42	2	C	1.59	2C	
43	1	C	1.95	1C	
44	1	R	1.30	1R	
45	3	C	2.28	3C	

RANGE
1 700 feet
2 800 feet
3 900 feet
231 2C repeat

TYPE
R Run
C Crawl
F False

NOTES

MONITOR TALLY SHEET

DATE 12/10/81 SHIFT 4 STATION Tower 901 9:29

OBSERVER [illegible] MONITOR RMA

HPS/Rocks

#	RANGE	TYPE	DETECTION TIME	VERIFY	RESULT
1	2	C	5.17	2C	+
2	1	C	6.82	1C	+
3	2	C	5.38	2C	+
4		F	—	F	+
5	1	R	1.63	1R	+
6	3	R	1.77	3R	+
7	2	R	1.16	2R	+
8	2	C	4.72	2C	+
9		F	—	F	+
10		F	—	F	+
11	1	R	1.55	1R	+
12	1	C	8.49	1C	+
13	2	C	4.75	2C	+
14	3	R	1.81	3R	+
15	1	C	6.42	1C	+
16		F	—	F	+
17	2	R	1.94	2R	+
18		F	—	F	+
19		F	—	F	+
20	2	R	1.58	2R	+
21		F	—	F	+
22	3	R	1.70	3R	+
23		F	—	F	+
24	1	R	1.63	1R	+
25	3	C	5.89	3C	+
26	2	R	1.51	2R	+
27	3	R	1.77	3R	+
28	1	C	5.48	1C	+
29	3	C	5.96	3C	+
30		F	—	F	+
31		F	—	F	+
32	3	R	1.46	3R	+
33		F	—	F	+
34		F	—	F	+
35	3	C	4.91	3C	+
36	1	R	1.62 ~~1.74~~	1R	+
37		F	—	F	+
38		F	—	F	+
39	3	C	51.17	3C	+
40		F	—	F	+
41	2	R	1.35	2R	+
42	2	C	4.24	2C	+
43	1	C	6.83	1C	+
44	1	R	1.62	1R	+
45	3	C	2.57	3C	+

2x?

→ 7

8

RANGE
1 700 feet
2 800 feet
3 900 feet

TYPE
R Run
C Crawl
F False

NOTES

} both jumps run together

45.26 > take difference

INTRUSION SCHEDULE

DATE 12/11/81 SHIFT 1 SUPERVISOR RGS

TEST CONFIGURATION: HPS/Rocks

#	RANGE	TYPE	INTRUDER
~~1~~	1	C	
~~2~~	3	C	
~~3~~		F	
~~4~~	3	R	
~~5~~	1	C	
~~6~~		F	
~~7~~	3	R	
~~8~~	1	C	
~~9~~	3	C	
~~10~~		F	
6 ~~11~~	1	R	
~~12~~		F	
~~13~~	2	C	
~~14~~	1	R	
~~15~~		F	
~~16~~	3	R	
~~17~~	2	R	
~~18~~		F	
~~19~~		F	
~~20~~	1	R	
~~21~~		F	
~~22~~	3	R	
~~23~~		F	
~~24~~	3	C	
~~25~~	2	R	
~~26~~	2	R	
~~27~~	1	R	
~~28~~		F	
~~29~~		F	
~~30~~	1	R	
~~31~~		F	
~~32~~	3	C	
~~33~~	2	C	
~~34~~	2	R	
~~35~~	2	C	
~~36~~	1	C	
~~37~~	1	C	
~~38~~		F	
~~39~~	2	R	
~~40~~		F	
~~41~~	3	C	
~~42~~	2	C	
~~43~~	2	C	
~~44~~	3	R	
~~45~~		F	

RANGE
1 700 feet
2 800 feet
3 900 feet

TYPE
R Run
C Crawl
F False

NOTES
~~1C~~
~~2R~~
~~F~~
~~3C~~
~~2C~~
~~1R~~
~~3R~~
~~F~~
~~3C~~
~~3R~~

1

MONITOR TALLY SHEET

DATE 12-11-81 SHIFT 1 STATION Tower

OBSERVER E Henry MONITOR Tom

HPS/ROCKS

#	RANGE	TYPE	DETECTION TIME	VERIFY	RESULT
1	1	C	4.26	+	1C
2	3	C	3.17	+	3C
3		F		+	F
4	3	R	1.93	+	3R
5	1	C	3.44	+	1C
6		F		+	F
7	3	R	1.77	+	3R
8	1	C	4.75	+	1C
9	3	C	5.79	+	3C
10		F		+	F
11	1	R	1.65	+	1R
12		F		+	F
13	2	C	4.98	+	2C
14	1	R	1.50	+	1R
15		F		+	F
16	3	R	1.64	+	3R
17	2	R	1.39	+	2R
18		F		+	F
19		F		+	F
20	1	R	1.64	+	1R
21		F		+	F
22	3	R	1.58	+	3R
23		F		+	F
24	3	C	4.65	+	3C
25	2	R	1.47	+	2R
26	2	R	1.68	+	2R
27	1	R	1.54	+	1R
28		F		+	F
29		F		+	F
30	1	R	1.73	+	1R
31		F		+	F
32	3	C	2.58	+	3C
33	2	C	5.55	+	2C
34	2	R	1.45	+	2R
35	2	C	4.88	+	2C
36	1	C	4.46	+	1C
37	1	C	8.21	+	1C
38		F		+	F
39	2	R	1.34	+	2R
40		F		+	F
41	3	C	6.22	+	3C
42	2	C	3.65	+	2C
43	2	C	3.81	+	2C
44	3	R	1.57	+	3R
45		F		+	F

RANGE
1 700 feet
2 800 feet
3 900 feet

TYPE
R Run
C Crawl
F False

NOTES

1C - 4.32
2R + 1.56
F +
3C + 2.66
2C + 4.67
1R + 1.67
3R + 1.42
F +
2C + 4.59
3R + 1.70

MONITOR TALLY SHEET

DATE 12/11/81 SHIFT 1 STATION TV

OBSERVER R. Clementsia MONITOR RMA 6.00 6.34

HPS/Rocks

#	RANGE	TYPE	DETECTION TIME	VERIFY	RESULT
1	1	C	2.28	1C	+
2	3	C	1.87	3C	+
3		F	7.32	F	+
4	3	R	1.77	3R	+
5	1	C	1.43	1C	+
6		F	7.22	F	+
7	3	R	1.62	3R	+
8	1	C	2.19	1C	+
9	3	C	3.24	3C	+
10		F	6.16	F	+
11	1	R	1.75	1R	+
12		F	6.69	F	+
13	2	C	2.18	2C	+
14	1	R	1.12	1R	+
15		F	7.18	F	+
16	3	R	1.45	3R	+
17	2	R	1.64	2R	+
18		F	7.89	F	+
19		F	7.89	F	+
20	1	R	1.11	1R	+
21		F	6.47	F	+
22	3	R	1.36	3R	+
23		F	6.92	F	+
24	3	C	2.52	3C	+
25	2	R	1.58	2R	+
26	2	R	1.58	2R	+
27	1	R	1.43	1R	+
28		F	6.23	F	+
29		F	8.28	F	+
30	1	R	1.28	1R	+
31		F	6.69	F	+
32	3	C	2.4 ~~[illegible]~~	3C	+
33	2	C	1.68	2C	+
34	2	R	1.30	2R	+
35	2	C	1.69	2C	+
36	1	C	1.90	1C	+
37	1	C	3.20	1C	+
38		F	7.06	F	+
39	2	R	1.60	2R	+
40		F	6.35	F	+
41	3	C	2.58	3C	+
42	2	C	1.84	2C	+
43	2	C	1.56	2C	+
44	3	R	1.46	3R	+
45		F	6.08	F	+

starts

RANGE
1 700 feet
2 800 feet
3 900 feet

TYPE
R Run
C Crawl
F False

NOTES
1C-2.02-1C +
2R-1.63-2R +
F-9.64-F +
3C-1.94-3C +
2C-2.06-2C +
1R-1.26-1R +
3R-1.44-3R +
F-6.58 F +
2C-1.80 2C +
3R-1.43 3R +

INTRUSION SCHEDULE

DATE 12/11/81 SHIFT 2 SUPERVISOR RMA

TEST CONFIGURATION: HPS/Rocks

#	RANGE	TYPE	INTRUDER
1	3	C	✓
2	1	C	✓
3		F	✓
4	1	C	✓
5		F	✓
6		F	✓
7	2	R	✓
8		F	✓
9	3	C	✓
10		F	✓
11	1	C	✓
12	1	C	✓
13	1	R	✓
14	3	R	✓
15	3	R	✓
16	3	R	✓
17	1	R	✓
18		F	✓
19		F	✓
20	1	R	✓
21	1	R	✓
22		F	✓
23	2	C	✓
24	2	R	✓
25	2	R	✓
26		F	✓
27	2	C	✓
28		F	✓
29	2	R	✓
30	2	R	✓
31	3	C	✓
32	1	C	✓
33		F	✓
34	3	C	✓
35	3	R	✓
36	3	C	✓
37		F	✓
38	2	C	✓
39	1	R	✓
40	2	C	✓
41		F	✓
42	3	R	✓
43	2	C	✓
44		F	✓
45		F	✓

RANGE
1 700 feet
2 800 feet
3 900 feet

TYPE
R Run
C Crawl
F False

NOTES
2R✓
1C✓
3C✓
F✓
3R✓
2C✓
1R✓
F✓
3C✓
2R✓

MONITOR TALLY SHEET

DATE 12/11/81 SHIFT 2 STATION Tower

OBSERVER P. Clementsia MONITOR RGS

HPS / Packs

#	RANGE	TYPE	DETECTION TIME	VERIFY	RESULT
1	3	C	4.0	3C	
2	1	C	6.0	3C	
3		F		F	
4	1	C	8.76	1C	
5		F		F	
6		F		F	
7	2	R	1.59	2R	
8		F		F	
9	3	C	6.47	3C	
10		F		F	
11	1	C	9.22	1C	
12	1	C	8.60	1C	
13	3	R	1.98	1R	
14	3	R	2.20	3R	
15	3	R	2.03	3R	
16	3	R	2.16	3R	
17	1	R	2.08	1R	
18		F		F	
19		F		F	
20	1	R	2.07	1R	
21	1	R	2.05	1R	
22		F		F	
23	2	C	4.58	2C	
24	2	R	1.78	2R	
25	2	R	1.59	2R	
26		F		F	
27	2	C	6.28	2C	
28		F		F	
29	2	R	1.59	2R	
30	2	R	1.37	2R	
31	3	C	—	—	
32	1	C	11.11	1C	
33		F		F	
34	3	C	8.87	3C	
35	3	R	2.29	3R	
36	3	C	7.46	3C	
37		F		F	
38	2	C	5.37	2C	
39	1	R	1.96	1R	
40	2	C	6.98	2C	
41		F		F	
42	3	R	2.02	3R	
43	2	C	6.31	2C	
44		F		F	
45		F		F	

start 1857

RANGE
1 700 feet
2 800 feet
3 900 feet

TYPE
R Run
C Crawl
F False

NOTES
2R 1.89 +
1C 14.06 +
3C 2.28 3R
F F +
3R 2.26 +
2C 4.93 +
1R 2.22 +
F F +
3C 4.90 +
2R 1.70 +

MONITOR TALLY SHEET

DATE 12-11-81 SHIFT 2 STATION CCTV

OBSERVER El MONITOR Tom

#	RANGE	TYPE	DETECTION TIME	VERIFY	RESULT
1	3	C	3.58	+	3C
2	1	C	2.64	+	1C
3		F	11.01	+	F
4	1	C	1.81	+	1C
5		F	14.49	+	F
6		F	10.09	+	F
7	2	R	1.57	+	2R
8		F	9.73	+	F
9	3	C	3.60	+	3C
10		F	7.91	+	F
11	1	C	3.12	+	1C
12	1	C	2.83	+	1C
13	1	R	1.42	+	1R
14	3	R	1.55	+	3R
15	3	R	1.46	+	3R
16	3	R	1.55	+	3R
17	1	R	1.28	+	1R
18		F	15.58	+	F
19		F	9.94	+	F
20	1	R	1.51	+	1R
21	1	R	1.57	+	1R
22		F	8.55	+	F
23	2	C	1.86	+	2C
24	2	R	1.62	+	2R
25	2	R	1.50	+	2R
26		F	12.53	+	F
27	2	C	3.94	+	2C
28		F	26.49	+	F
29	2	R	1.41	+	2R
30	2	R	1.58	+	2R
31	3	C	2.03	+	3C
32	1	C	4.23	+	1C
33		F	8.07	+	F
34	3	C	2.08	+	3C
35	3	R	1.75	+	3R
36	3	C	3.81	+	3C
37		F	21.69	+	F
38	2	C	2.24	+	2C
39	1	R	1.83	+	1R
40	2	C	2.83	+	2C
41		F	8.45	+	F
42	3	R	1.48	+	3R
43	2	C	2.36	+	2C
44		F	11.29	+	F
45		F	11.12	+	F

RANGE
1 700 feet
2 800 feet
3 900 feet

TYPE
R Run
C Crawl
F False

NOTES

2R +1.71
1C +4.70
3C +2.34
F +32.87
3R +1.57
2C +3.90
1R +2.05
F +22.50
3C +3.83
2R +1.60

G
J

11.29

INTRUSION SCHEDULE

DATE 12/11/81 SHIFT 3 SUPERVISOR TIB

TEST CONFIGURATION: APS/Rocks

#	RANGE	TYPE	INTRUDER
1		F	✓
2	2	C	✓
3		F	✓
4	2	R	✓
5	2	C	✓
6		F	✓
7	3	R	✓
8		F	✓
9		F	✓
10	1	C	✓
11	2	C	✓
12	3	R	✓
13	1	R	✓
14	3	R	✓
15	2	R	✓
16	2	C	✓
17	3	R	✓
18	3	C	✓
19	3	C	✓
20	3	C	✓
21	1	R	✓
22		F	✓
23	2	R	✓
24		F	✓
25	2	C	✓
26	3	C	✓
27	3	C	✓
28	1	R	✓
29	1	R	✓
30		F	✓
31	1	C	✓
32		F	✓
33		F	✓
34		F	✓
35	1	C	✓
36	1	C	✓
37	3	R	✓
38	1	R	✓
39	2	R	✓
40		F	✓
41		F	✓
42	2	R	✓
43		F	✓
44	1	C	✓
45		F	✓

RANGE
1 700 feet
2 800 feet
3 900 feet

TYPE
R Run
C Crawl
F False

NOTES

MONITOR TALLY SHEET

DATE 12-11-81 SHIFT 3 STATION Tower

OBSERVER Ed Henry MONITOR RMA

#	RANGE	TYPE	DETECTION TIME	VERIFY	RESULT
1		F	—	F	+
2	2	C	2.93	2C	+
3		F	—	F	+
4	2	R	1.84	2R	+
5	2	C	3.79	2C	+
6		F	—	F	+
7	3	R	1.94	3R	+
8		F	—	F	+
9		F	—	F	+
10	1	C	3.19	1C	+
11	2	C	3.64	2C	+
12	3	R	1.47	3R	+
13	1	R	1.70	1R	+
14	3	R	1.87	3R	+
15	2	R	2.16	2R	+
16	2	C	4.40	2C	+
17	3	R	1.63	3R	+
18	3	C	2.67	3C	+
19	3	C	5.39	3C	+
20	3	C	3.17	3C	+
21	1	R	1.69	1R	+
22		F	—	F	+
23	2	R	1.65	2R	+
24		F	—	F	+
25	2	C	4.15	2C	+
26	3	C	2.83	3C	+
27	3	C	5.61	3C	+
28	1	R	1.77	1R	+
29	1	R	1.87	1R	+
30		F	—	F	+
31	1	C	3.52	1C	+
32		F	—	F	+
33		F	—	F	+
34		F	—	F	+
35	1	C	3.96	1C	+
36	1	C	3.41	1C	+
37	3	R	5.43	3R	+
38	1	R	1.54	1R	+
39	2	R	1.90	2R	+
40		F	—	F	+
41		F	—	F	+
42	2	R	1.39	2R	+
43		F	—	F	+
44	1	C	5.74	1C	+
45		F	—	F	+

start →

RANGE
1 700 feet
2 800 feet
3 900 feet

TYPE
R Run
C Crawl
F False

NOTES

Take difference

MONITOR TALLY SHEET

DATE 12/11/81 SHIFT 3 STATION TV

OBSERVER Paul MONITOR RCS

HPS / Rocks

#	RANGE	TYPE	DETECTION TIME	VERIFY	RESULT
1		F	8.47	F	
2	2	C	1.86	2C	
3		F	6.78	F	
4	2	R	1.54	2R	
5	2	C	1.72	2C	
6		F	7.64	F	
7	3	R	0.90	3R	
8		F	6.13	F	
9		F	6.05	F	
10	1	C	1.71	1C	3.1
11	2	C	2.02	2C	3.4
12	3	R	1.40	3R	
13	1	R	1.32	1R	
14	3	R	1.17	3R	
15	2	R	1.31	2R	
16	2	C	1.67	2C	
17	3	R	1.45	3R	
18	3	C	1.68	3C	
19	3	C	2.97	3C	
20	3	C	1.98	3C	
21	1	R	1.22	1R	
22		F	6.86	F	
23	2	R	1.34	2R	
24		F	6.23	F	
25	2	C	1.71	2C	
26	3	C	1.43	3C	
27	3	C	3.16	3C	
28	1	R	1.16	1R	
29	1	R	1.10	1R	
30		F	7.71	F	
31	1	C	1.98	1C	
32		F	6.75	F	
33		F	7.06	F	
34		F	15.65	F	
35	1	C	2.28	1C	
36	1	C	1.67	1C	
37	3	R	3.26	3R	
38	1	R	1.13	1R	
39	2	R	1.47	2R	
40		F	7.34	F	
41		F	7.62	F	
42	2	R	1.44	2R	
43		F	7.46	F	
44	1	C	2.00	1C	
45		F	8.78	F	

Start: ~1930
Finish!

RANGE
1 700 feet
2 800 feet
3 900 feet

TYPE
R Run
C Crawl
F False

(1)

NOTES

(1) Times from alarm to when intruders head reaches the rocks

INTRUSION SCHEDULE

DATE 12/11/81 SHIFT 4 SUPERVISOR RCS

TEST CONFIGURATION: HPS/rocks

#	RANGE	TYPE	INTRUDER
1	2	R	
2	3	C	
3		F	
4		F	
5	2	R	
6	2	R	
7	1	R	
8	1	R	
9	1	C	
10		F	
11	3	C	
12		F	
13	2	C	
14		F	
15		F	
16	2	C	
17	2	C	
18	2	C	
19		F	
20		F	
21	3	R	
22	3	R	
23		F	
24	1	C	
25		F	
26	1	C	
27	1	C	
28	1	R	
29		F	
30	3	C	
31		F	
32		F	
33	1	C	
34	2	R	
35	1	R	
36	3	R	
37	3	C	
38	3	R	
39	3	R	
40	3	C	
41		F	
42		F	
43	2	R	
44	1	R	
45	2	C	

RANGE
1 700 feet
2 800 feet
3 900 feet

TYPE
R Run
C Crawl
F False

NOTES

MONITOR TALLY SHEET

DATE 12/11/81 SHIFT 4 STATION Tower

OBSERVER Paul MONITOR TJB

HPS/Rocks

#	RANGE	TYPE	DETECTION TIME	VERIFY	RESULT
1	2	R	2.11	+	2R
2	3	C	8.00	+	3C
3		F		+	F
4		F		+	F
5	2	R	1.89	+	2R
6	2	R	1.71	+	2R
7	1	R	2.08	+	1R
8	1	R	1.85	+	1R
9	1	C	11.47	+	1C
10		F		+	F
11	3	C	4.53	+	3C
12		F		+	F
13	2	C	5.89	+	2C
14		F		+	F
15		F		+	F
16	2	C	4.26	+	2C
17	2	C	6.55	+	2C
18	2	C	4.90	+	2C
19		F		+	F
20		F		+	F
21	3	R	2.17	+	3R
22	3	R	1.97	+	3R
23		F		+	F
24	1	C	8.27	+	1C
25		F		+	F
26	1	C	10.60	+	1C
27	1	C	6.36	+	1C
28	1	R	1.74	+	1R
29		F	7.38	—	1C
30	3	C	—	—	—
31		F		+	F
32		F		+	F
33	1	C	9.14	+	1C
34	2	R	1.86	+	2R
35	1	R	1.90	+	1R
36	3	R	2.39	+	3R
37	3	C	—	—	—
38	3	R	—	—	—
39	3	R	~2.00	+	3R
40	3	C	6.65	+	3C
41		F		+	F
42		F		+	F
43	2	R	1.83	+	2R
44	1	R	2.10	+	1R
45	2	C	7.72	+	2C

RANGE
1 700 feet
2 800 feet
3 900 feet

TYPE
R Run
C Crawl
F False

NOTES Full Moon

No timer reset.

MONITOR TALLY SHEET

DATE 12-11-81 SHIFT 4 STATION CCTV

OBSERVER W Henry MONITOR RMA

Run Time ↓

2.95 start →

#	RANGE	TYPE	DETECTION TIME	VERIFY	RESULT	
1	2	R	1.64	2R	+	
2	3	C	1.83	3C	+ 1.4	G
3		F	8.16	F	+	
4		F	12.50	F	+	
5	2	R	1.80	2R	+	
6	2	R	1.88	2R	+	
7	1	R	1.61	1R	+	
8	1	R	1.23	1R	+	
9	1	C	2.43	1C	+ 2.2	
10		F	10.89	F	+	
11	3	C	1.80	3C	+ 1.3	G
12		F	7.55	F	+	
13	2	C	1.63	2C	+ 2.7	S
14		F	13.72	F	+	
15		F	12.08	F	+	
16	2	C	2.11	2C	+ 2.4	G
17	2	C	2.05	2C	+ 2.8	S
18	2	C	2.04	2C	+ 2.5	G
19		F	7.93	F	+	
20		F	10.84	F	+	
21	3	R	1.67	3R	+	
22	3	R	1.41	3R	+	
23		F	10.44	F	+	
24	1	C	2.27	1C	+ 2.3	S
25		F	17.39	F	+	
26	1	C	1.84	1C	+ 2.3	G
27	1	C	2.45	1C	+ 2.7	S
28	1	R	1.39	1R	+	
29		F	10.92	F	+	subtract
30	3	C	13.07	3C	+	
31		F	7.19	F	+	
32		F	11.86	F	+	
33	1	C	2.79	1C	+ 1.7	G
34	2	R	1.78	2R	+	
35	1	R	1.32	1R	+	
36	3	R	1.92	3R	+	
37	3	C	2.64	3C	+ 1.2	G
38	3	R	1.66	3R	+	S subtract
39	3	R	2.92	3R	+	
40	3	C	3.77	3C	+ 2.7	S
41		F	8.49	F	+	
42		F	9.98	F	+	
43	2	R	2.11	2R	+	
44	1	R	1.53	1R	+	
45	2	C	2.63	2C	+ 2.9	G

S 2.6
G 2.3

RANGE
1 700 feet
2 800 feet
3 900 feet

TYPE
R Run
C Crawl
F False

NOTES

INTRUSION SCHEDULE

DATE 12/14/81 SHIFT 1 SUPERVISOR Tom

TEST CONFIGURATION: HFS ~~[illegible]~~/Rocks (rain)

#	RANGE	TYPE	INTRUDER
1	1	R	✓
2		F	✓
3	3	C	✓
4	1	R	✓
5		F	✓
6		F	✓
7		F	✓
8	3	C	✓
9	3	R	✓
10	1	C	✓
11	2	C	✓
12		F	✓
13	1	C	✓
14	3	C	✓
15	1	C	✓
16	1	R	✓
17	1	C	✓
18		F	✓
19	2	C	✓
20	3	R	✓
21	3	R	✓
22		F	✓
23	3	R	✓
24		F	✓
25	2	C	✓
26		F	✓
27	1	R	✓
28	1	C	✓
29		F	✓
30	2	C	✓
31		F	✓
32		F	✓
33	2	R	✓
34		F	✓
35	3	R	✓
36	2	R	✓
37	2	R	✓
38	2	R	✓
39	2	R	✓
40	2	C	✓
41	3	C	✓
42		F	✓
43		F	✓
44	1	R	✓
45	3	C	✓

RANGE
1 700 feet
2 800 feet
3 900 feet

TYPE
R Run
C Crawl
F False

NOTES
2C
3R
1C
F
1R
2R
3C
F
1C
2R

MONITOR TALLY SHEET

DATE 12-14-81 SHIFT 1 STATION Tower

OBSERVER E. Henry MONITOR RCS

Hill/Rocks (rain)

#	RANGE	TYPE	DETECTION TIME	VERIFY	RESULT
1	1	R	.75	1R	
2		F	1.37	F	
3	3	C	10.11	3C	
4	1	R	2.40	1R	
5		F		F	
6		F		F	
7		F		F	
8	3	C	11.05	3C	
9	3	R	3.26	3R	
10	1	C	5.41	1C	
11	2	C	7.05	2C	
12		F		F	
13	1	C	5.26	1C	
14	3	C	8.93	3C	
15	1	C	4.87	1C	
16	1	R	2.03	1R	
17	1	C	6.21	1C	
18		F		F	
19	2	C	6.1	2C	
20	3	R	—	—	
21	3	R	2.14	3R	
22		F		F	
23	3	R		—	
24		F		F	
25	2	C	6.03	2C	
26		F		F	
27	1	R	2.18	1R	
28	1	C	7.66	1C	
29		F		F	
30	2	C	6.44	2C	
31		F		F	
32		F		F	
33	2	R	2.20	2R	
34		F		F	
35	3	R		—	
36	2	R	2.1	2R	
37	2	R	2.36	2R	
38	2	R	2.37	2R	
39	2	R	2.96	2R	
40	2	C	6.26	2C	
41	3	C	5.45	3C	
42		F		F	
43		F		F	
44	1	R	2.36	1R	
45	3	C	4.93	3C	

RANGE

~~Pushes~~ Buttons mistake false alarm reacted

1 200 feet

2 800 feet

3 900 feet

TYPE

R Run

C Crawl

F False

NOTES

2C
3R
1C
F
1R
2R
3C
F
1C
2R

MONITOR TALLY SHEET

DATE 12-14-81 SHIFT 1 STATION TV Heavy rain

OBSERVER ~~E. Hoff~~ Paul MONITOR RMA

#	RANGE	TYPE	DETECTION TIME	VERIFY	RESULT
1	1	R	1.34	1R	+
2		F	11.40	F	+
3	3	C	5.51	3C	+
4	1	R	1.87	1R	+
5		F	9.12	F	+
6		F	9.02	F	+
7		F	9.15	F	+
8	3	C	4.33	3C	+
9	3	R	1.49	3R	+
10	1	C	2.84	1C	+
11	2	C	2.21	2C	+
12		F	6.90	F	+
13	1	C	2.75	1C	+
14	3	C	2.01	3C	+
15	1	C	3.09	1C	+
16	1	R	1.46	1R	+
17	1	C	4.05	1C	+
18		F	5.80	F	+
19	2	C	2.76	2C	+
20	3	R	1.65	3R	+
21	3	R	1.59	3R	+
22		F	6.41	F	+
23	3	R	1.92	3R	+
24		F	6.64	F	+
25	2	C	3.64	2C	+
26		F	6.34	F	+
27	1	R	1.68	1R	+
28	1	C	2.77	2C	+
29		F	6.53	F	+
30	2	C	4.47	2C	+
31		F	7.03	F	+
32		F	6.57	F	+
33	2	R	1.45	2R	+
34		F	5.82	F	+
35	3	R	1.70	3R	+
36	2	R	1.50	2R	+
37	2	R	1.55	2R	+
38	2	R	1.63	2R	+
39	2	R	2.19	2R	+
40	2	C	2.20	2C	+
41	3	C	3.98	3C	+
42		F	5.58	F	+
43		F	6.96	F	+
44	1	R	1.50	1R	+
45	3	C	3.44	3C	+

RANGE
1 700 feet
2 800 feet
3 900 feet

TYPE
R Run
C Crawl
F False

NOTES
2C
3R
1C
F
1R
2R
3C
F
1C
2R

INTRUSION SCHEDULE

DATE 12-14-81 SHIFT 2 SUPERVISOR

TEST CONFIGURATION: HPS/Rocks (rain)

#	RANGE	TYPE	INTRUDER
1		F	
2	3	C	✓
3	2	C	✓
4	2	R	
5	2	R	
6	2	R	
7	3	C	
8		F	
9		F	
10	1	C	
11	1	C	
12		F	
13		F	✓
14	1	C	
15		F	
16		F	
17	2	C	
18		F	
19		F	
20	2	C	
21	2	R	
22	1	R	
23		F	
24	1	C	
25	1	R	
26	3	C	
27	2	R	
28	1	R	
29	3	R	rain
30	3	R	✓
31		F	✓
32	2	C	✓
33	2	C	✓
34	1	C	✓
35		F	✓
36	3	R	✓
37	1	R	✓
38	3	R	✓
39		F	✓
40		F	✓
41	3	C	✓
42		F	✓
43	3	R	
44	1	R	✓
45	3	C	

RANGE
1 700 feet
2 800 feet
3 900 feet

TYPE
R Run
C Crawl
F False

NOTES

2 C
1 R
F
1 C
3 C
2 R
3 R
F
2 R
2 C

MONITOR TALLY SHEET

DATE 12/14/81 SHIFT 2 STATION CCTV

OBSERVER El MONITOR Tom

#	RANGE	TYPE	DETECTION TIME	VERIFY	RESULT
1		F	8.44	+	F
2	3	C	6.05	+	3C
3	2	C	5.31	+	2C
4	2	R	1.76	+	2R
5	2	R	1.64	+	2R
6	2	R	1.80	+	2R
7	3	C	8.24	+	3C
8		F	9.36	+	F
9		F	9.54	+	F
10	1	C	2.84	+	1C
11	1	C	3.07	+	1C
12		F	15.12	+	F
13		F	11.77	+	F
14	1	C	5.86	+	1C
15		F	11.64	+	F
16		F	10.10	+	F
17	2	C	2.85	+	2C
18		F	11.27	+	F
19		F	9.08	+	F
20	2	C	3.32	+	2C
21	2	R	1.53	+	2R
22	1	R	2.05	+	1R
23		F	11.94	+	F
24	1	C	3.87	+	1C
25	1	R	2.15	+	1R
26	3	C	3.43	+	3C
27	2	R	1.65	+	2R
28	1	R	1.66	+	1R
29	3	R	1.79	+	3R
✓ 30	3	~~F~~R	2.40	+	3R
31	2	~~R~~F	11.50	+	F
32	2	~~R~~C	2.77	+	2C
33	2	C	3.25	+	2C
34	1	C	6.92	+	1C
35		F	10.10	+	F
36	3	R	2.46	+	3R
37	1	R	2.49	+	1R
38	3	R	2.07	+	3R
39		F	14.15	+	F
40		F	28.15	+	F
41	3	C	4.72	+	3C
42		F	11.21	+	F
43	3	R	1.82	+	3R
44	1	R	2.24	+	1R
45	3	C	3.59	–	2C

RANGE slow start
1 700 feet
2 800 feet
3 900 feet

TYPE
R Run
C Crawl
F False

NOTES
2C
1R
F
1C
3C
2R
3R
F
2R
2C

Raining hard

J

Gene
Jim

slower starts because of slipping in mud.

MONITOR TALLY SHEET

DATE 12/14/81 SHIFT 2 STATION Tower

OBSERVER Paul MONITOR RCS

HPS/Rocks rain

#	RANGE	TYPE	DETECTION TIME	VERIFY	RESULT
1		F		F	
2	3	C	—	—	✓
3	2	C	12.47	2C	
4	2	R	2.27	2R	
5	2	R	2.27	2R	
6	2	R	2.34	2R	
7	3	C	—	—	✓
8		F		F	
9		F	13.71	1C	✓
10	1	C	3.76	3R	✓
11	1	C	9.28	1C	
12		F	14.32	1C	✓
13		F		F	
14	1	C	9.94	1C	
15		F	11.73	3C	✓
16		F		F	
17	2	C	7.24	2C	
18		F	21.48	3C	✓
19		F		F	
20	2	C	6.05	2C	
21	2	R	2.27	2R	
22	1	R	2.43	1R	
23		F		F	
24	1	C	8.19	1C	
25	1	R	2.23	1R	
26	3	C	3.67	3R	
27	2	R	1.99	2R	
28	1	R	2.69	1R	✓
29	3	R	5.72	3C	✓
30	3	R	22.08	1C	✓
31	[illegible]	F	16.34	2C	✓
32	2	C	6.85	2C	
33	2	C	6.42	2C	
34	1	C	7.57	1C	
35		F		F	
36	3	R	24.9	3C	✓
37	1	R	2.51	1R	✓
38	3	R	—	—	
39		F		F	
40		F		F	
41	3	C	7.47	3C	
42		F		F	
43	3	R	—	—	✓
44	1	R	2.55	1R	
45	3	C	11.2	3C	

RANGE
1 700 feet
2 800 feet
3 900 feet

finish 1900

TYPE
R Run
C Crawl
F False

NOTES
2C
1R
F
1C
3C
2R
3R
F
2R
2C

Jim
vis improved

INTRUSION SCHEDULE

DATE 12/14/81 SHIFT 3 SUPERVISOR

TEST CONFIGURATION: APS/SPOTS/Rocks

#	RANGE	TYPE	INTRUDER
1		F	
2		F	
3	3	R	
4	3	C	
5	1	R	
6	1	C	
7		F	
8	3	C	
9	1	R	
10	3	C	
11		F	
12		F	
13	3	C	
14	1	R	
15	3	R	
16	1	R	
17	2	C	
18		F	
19	3	C	
20		F	
21	3	R	
22	2	C	
23	1	C	
24		F	
25		F	
26		F	
27	2	R	
28		F	
29	1	C	
30	2	R	
31	3	R	
32	1	C	
33	2	R	
34		F	
35	2	C	
36		F	
37		F	
38		F	
39	2	C	
40	2	R	
41	3	R	
42	1	C	
43	1	R	
44	2	C	
45	2	R	

RANGE
1 700 feet
2 800 feet
3 900 feet

TYPE
R Run
C Crawl
F False

NOTES

MONITOR TALLY SHEET

DATE 12-14-81 SHIFT 3 STATION Tower

OBSERVER El MONITOR Tom

APS/SPOTS/ROCKS

#	RANGE	TYPE	DETECTION TIME	VERIFY	RESULT
1		F		+	F
2		F		+	F
3	3	R	—	—	—
4	3	C	4.11	+	3C
5	1	R	2.72	+	1R
6	1	C	6.79	+	1C
7		F		+	F
8	3	C	3.92	+	3C
9	1	R	2.41	+	1R
10	3	C	3.83	+	3C
11		F		+	F
12		F		+	F
13	3	C	3.73	+	3C
14	1	R	2.30	+	1R
15	3	R	6.40	+	3R
16	1	R	2.06	+	1R
17	2	C	5.81	+	2C
18		F		+	F
19	3	C	4.89	+	3C
20		F		+	F
21	3	R	2.88	+	3R
22	2	C	5.84	+	2C
23	1	C	5.83	+	1C
24		F		+	F
25		F		+	F
26		F		+	F
27	2	R	2.51	+	2R
28		F		+	F
29	1	C	7.63	+	1C
30	2	R	2.72	+	2R
31	3	R	2.27	+	3R
32	1	C	4.52	+	1C
33	2	R	2.06	+	2R
34		F		+	F
35	2	C	4.85	+	2C
36		F		+	F
37		F		+	F
38		F		+	F
39	2	C	6.17	+	2C
40	2	R	2.40	+	2R
41	3	R	2.65	+	3R
42	1	C	4.54	+	1C
43	1	R	2.62	+	1R
44	2	C	7.48	+	2C
45	2	R	2.20	+	2R

RANGE
1 700 feet
2 800 feet
3 900 feet

TYPE
R Run
C Crawl
F False

got delayed start

NOTES shift 1+2 done w/o spots 3+4 with spots

Running steadily. Intruders have stayed outside for all shifts.

MONITOR TALLY SHEET

DATE 12-14-81 SHIFT 3 STATION TV

OBSERVER Paul MONITOR RMA

Rain
7:08
7:35

#	RANGE	TYPE	DETECTION TIME	VERIFY	RESULT
1		F	4.52	F	+
2		F	4.70	F	+
3	3	R	1.74	3R	+
4	3	C	2.88	3C	+
5	1	R	1.60	1R	+
6	1	C	2.28	1C	+
7		F	6.54	F	+
8	3	C	3.41	3C	+
9	1	R	1.56	1R	+
10	3	C	3.37	3C	+
11		F	6.72	F	+
12		F	7.65	F	+
13	3	C	2.08	3C	+
14	1	R	1.73	1R	+
15	3	R	5.69	3R	+
16	1	R	1.44	1R	+
17	2	C	2.30	2C	+
18		F	5.95	F	+
19	3	C	3.44	3C	+
20		F	7.82	F	+
21	3	R	1.48	3R	+
22	2	C	2.98	2C	+
23	1	C	3.00	1C	+
24		F	6.47	F	+
25		F	6.68	F	+
26		F	6.52	F	+
27	2	R	1.64	2R	+
28		F	6.47	F	+
29	1	C	2.55	1C	+
30	2	R	1.47	2R	+
31	3	R	1.59	3R	+
32	1	C	2.87	1C	+
33	2	R	1.53	2R	+
34		F	7.62	F	+
35	2	C	2.78	2C	+
36		F	5.30	F	+
37		F	7.18	F	+
38		F	5.35	F	+
39	2	C	3.02	2C	+
40	2	R	1.69	2R	+
41	3	R	1.59	3R	+
42	1	C	2.67	1C	+
43	1	R	1.67	1R	+
44	2	C	3.11	2C	+
45	2	R	1.72	2R	+

RANGE
1 700 feet
2 800 feet
3 900 feet

TYPE
R Run
C Crawl
F False

NOTES

— 23 seconds - 2 hoppers
man did not run on first
hopper. Did on second one!

INTRUSION SCHEDULE

DATE 12/14/81 SHIFT 4 SUPERVISOR _____

TEST CONFIGURATION: HRS/5 pots/rocks (rain)

#	RANGE	TYPE	INTRUDER
1	2	C	
2	2	C	
3		F	
4	2	R	
5		F	
6		F	
7	1	C	
8		F	
9	1	C	
10	2	R	
11	1	C	
12	1	C	
13	2	C	
14	3	R	
15		F	
16		F	
17	2	C	
18		F	
19		F	
20	2	C	
21	3	R	
22	1	C	
23		F	
24	3	R	
25	2	R	
26		F	
27		F	
28	3	C	
29	1	R	
30	1	R	
31	3	C	
32		F	
33		F	
34	1	R	
35	1	R	
36	3	C	
37	3	C	
38	3	R	
39	3	C	
40	3	R	
41		F	
42	1	R	
43		F	
44	2	R	
45	2	R	

RANGE
1 700 feet
2 800 feet
3 900 feet

TYPE
R Run
C Crawl
F False

NOTES

Monitor Tally Sheet
~~INTRUSION SCHEDULE~~ Tower

DATE 12-14-81 SHIFT 4 SUPERVISOR

Observer Paul Monitor Tom

TEST CONFIGURATION: APS/SPOTS/ROCKS

#	RANGE	TYPE	INTRUDER	Varying	Result	
1	2	C	4.76	+	2C	
2	2	C	4.16	+	2C	
3		F	5.67	—	2C	
4	2	R	2.31	+	2R	
5		F	2.96	—	3R	
6		F		+	F	6
7	1	C	11.69	+	1C	7
8		F		+	F	8
9	1	C	6.37	+	1C	
10	2	R	2.13	+	2R	10
11	1	C	6.79	+	1C	
12	1	C	5.79	+	1C	12
13	2	C	6.53	+	2C	
14	3	R	8.30	—	3C	14
15		F	~~23.37~~	+	F	
16		F	23.37	—	1C	16
17	2	C	4.93	+	2C	
18		F	20.39	—	1C	
19		F		+	F	
20	2	C	5.86	+	2C	20
21	3	R	19.39	—	1C	
22	1	C	10.78	+	1C	
23		F	7.51	—	3C	
24	3	R	—	—	—	
25	2	R	2.13	+	2R	25
26		F	4.82	—	3R	
27		F		+	F	
28	3	C	6.23	+	3C	
29	1	R	2.30	+	1R	
30	1	R	2.55	+	1R	30
31	3	C	6.10	+	3C	
32		F		+	F	
33		F	27.86	—	3C	
34	1	R	2.48	+	1R	
35	1	R	1.93	+	1R	35
36	3	C	3.67	+	3C	
37	3	C	14.19	+	3C	
38	3	R	24.74	—	3C	
39	3	C	7.48	+	3C	
40	3	R	16.26	—	3C	40
41		F		+	F	
42	1	R	2.72	+	1R	
43		F		+	F	
44	2	R	2.31	+	2R	
45	2	R	2.28	+	2R	

RANGE
1 700 feet
2 800 feet
3 900 feet

TYPE
R Run
C Crawl
F False

NOTES

MONITOR TALLY SHEET

DATE 12/14/81 SHIFT 4 STATION TV 7:45

OBSERVER G. Henry MONITOR RMA

#	RANGE	TYPE	DETECTION TIME	VERIFY	RESULT
1	2	C	2.82	2C	+
2	2	C	3.52	2C	+
3		F	5.58	F	+
4	2	R	2.12	2R	+
5		F	6.07	F	+
6		F	9.50	F	+
7	1	C	3.62	1C	+
8		F	5.87	F	+
9	1	C	2.58	1C	+
10	2	R	2.04	2R	+
11	1	C	4.37	1C	+
12	1	C	2.79	1C	+
13	2	C	2.98	2C	+
14	3	R	1.92	3R	+
15		F	11.10	F	+
16		F	6.37	F	+
17	2	C	2.74	2C	+
18		F	10.28	F	+
19		F	8.21	F	+
20	2	C	2.84	2C	+
21	3	R	1.67	3R	+
22	1	C	3.23	1C	+
23		F	8.79	F	+
24	3	R	10.55	3R	+
25	2	R	2.10	2R	+
26		F	7.60	F	+
27		F	8.17	F	+
28	3	C	3.78	3C	+
29	1	R	1.52	1R	+
30	1	R	2.01	1R	+
31	3	C	5.12	1C	+
32		F	15.14	F	+
33		F	11.55	F	+
34	1	R	2.25	1R	+
35	1	R	1.64	1R	+
36	3	C	2.84	3C	+
37	3	C	5.25	3C	+
38	3	R	2.22	3R	+
39	3	C	5.03	3C	+
40	3	R	1.98	3R	+
41		F	9.55	F	+
42	1	R	2.92	1R	F
43		F	8.28	F	+
44	2	R	1.80	2R	+
45	2	R	1.92	2R	+

RANGE
1 700 feet
2 800 feet
3 900 feet

TYPE
R Run
C Crawl
F False

NOTES

subtract

WEATHER DATA AND PHOTOMETER MEASUREMENTS

2 December

Weather Report at 1600 local time

	National Airport	Dulles Airport
Visibility (mi)	12	20
Temperature (°F)	53	55
Wind Speed (mph)	7	3
Wind Direction (deg)	180	200

3 December

Weather Report at 1600 local time

	National Airport	Dulles Airport
Visibility (mi)	15	15
Temperature (°F)	53	50
Wind Speed (mph)	15	6
Wind Direction (deg)	280	310

Luminance of the test zone with tungsten iodide lights and natural grass surface, 0.12 fL.

4 December

Weather Report at 1600 local time

	National Airport	Dulles Airport
Visibility (mi)	6[1]	6[2]
Temperature (°F)	49	46
Wind Speed (mph)	8	5
Wind Direction (deg)	060	330

[1]rain and fog
[2]rain

Luminance of the test zone using tungsten iodide lights and discrete retroreflectors placed on the ground; 3.9 fL.

7 December

Weather Report at 1600 local time

	National Airport	Dulles Airport
Visibility (mi)	15	25
Temperature (°F)	46	43
Wind Speed (mph)	6	6
Wind Direction (deg)	200	190

The discrete retroreflectors were raised 3 5/8 inches. Luminance using the tungsten iodide lights was 14.2 fL.

8 December

Weather Report at 1500 local time

	National Airport	Dulles Airport
Visibility (mi)	20	25
Temperature (°F)	49	47
Wind Speed (mph)	8	18
Wind Direction (deg)	060	300

Luminance of the test zone with high pressure sodium 250 watt lights and natural grass surface, 0.16 fL.

9 December

Weather Report at 1500 local time

	National Airport	Dulles Airport
Visibility (mi)	20	25
Temperature (°F)	40	37
Wind Speed (mph)	24/35[1]	18
Wind Direction (deg)	330	310

[1]gusts

10 December

Weather Report at 1500 local time

	National Airport	Dulles Airport
Visibility (mi)		25
Temperature (°F)		37
Wind Speed (mph)		15/27[1]
Wind Direction (deg)		310

[1]gusts

Luminance of the test zone with high pressure sodium 250 watt lights and crushed rock surface, 0.24 fL.

11 December

Weather Report at 1600 local time

	National Airport	Dulles Airport
Visibility (mi)	12	25
Temperature (°F)	41	36
Wind Speed (mph)	17/24[1]	14
Wind Direction (deg)	330	300

[1]gusts

14 December

Weather Report at 1600 local time

	National Airport	Dulles Airport
Visibility (mi)	2[1]	3/4[1]
Temperature (°F)	38	35
Wind Speed (mph)	8	5
Wind Direction (deg)	050	090

[1]rain and fog

It was raining too hard to focus the photometer on the test zone. With an approximate setting of the photometer the luminance in the field was 4.4 fL with the high pressure sodium lights on. Turning on the tungsten iodide lights (in addition to the high pressure sodium lights) increased the luminance to 5.4 fL.