AD-A119 740 AIR FORCE INST OF TECH WRIGHT-PATTERSON AFB OH F/G 12/1
REGENERATIVE SIMULATION USING INTERNAL CONTROLS.(U)
1982 J D EAKLE-CARDINAL
UNCLASSIFIED AFIT/CI/NR/82-53D NL

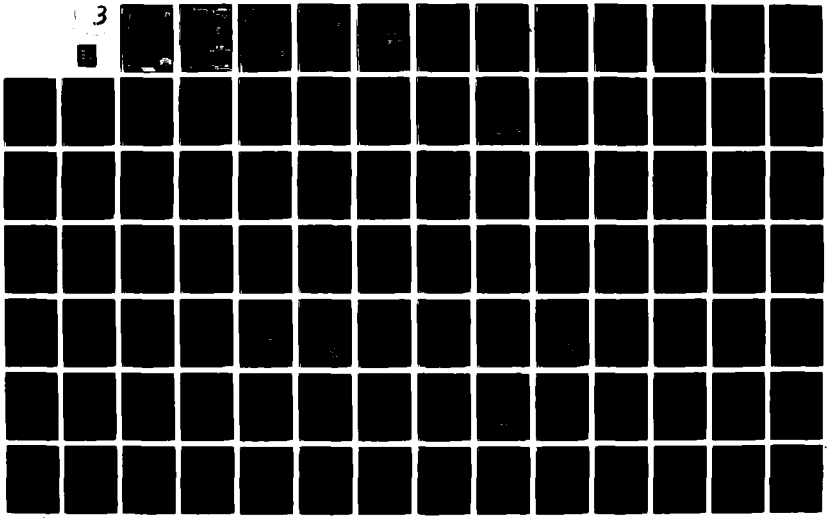

82-53

AD A119740

REGENERATIVE SIMULATION USING INTERNAL CONTROLS

by

JAN DENISE EAKLE-CARDINAL

Captain, United States Air Force

Doctorate of Philosophy

The University of Texas at Austin

1982

192 Pages

DTIC FILE COPY

DTIC ELECTE S D

Approved for public release; Distribution Unlimited

UNCLASS

SECURITY CLASSIFICATION OF THIS PAGE (When Data Entered)

REPORT DOCUMENTATION PAGE

READ INSTRUCTIONS BEFORE COMPLETING FORM

1. REPORT NUMBER
AFIT/CI/NR/82-53D

2. GOVT ACCESSION NO. AD A119740

3. RECIPIENT'S CATALOG NUMBER

4. TITLE (and Subtitle)
Regenerative Simulation Using Internal Controls

5. TYPE OF REPORT & PERIOD COVERED
THESIS/DISSERTATION

6. PERFORMING ORG. REPORT NUMBER

7. AUTHOR(s)
Jan Denise Eakle-Cardinal

8. CONTRACT OR GRANT NUMBER(s)

9. PERFORMING ORGANIZATION NAME AND ADDRESS
AFIT STUDENT AT: University of Texas at Austin

10. PROGRAM ELEMENT, PROJECT, TASK AREA & WORK UNIT NUMBERS

11. CONTROLLING OFFICE NAME AND ADDRESS
AFIT/NR
WPAFB OH 45433

12. REPORT DATE
December 1982

13. NUMBER OF PAGES
192

14. MONITORING AGENCY NAME & ADDRESS (if different from Controlling Office)

15. SECURITY CLASS. (of this report)
UNCLASS

15a. DECLASSIFICATION/DOWNGRADING SCHEDULE

16. DISTRIBUTION STATEMENT (of this Report)
APPROVED FOR PUBLIC RELEASE; DISTRIBUTION UNLIMITED

17. DISTRIBUTION STATEMENT (of the abstract entered in Block 20, if different from Report)

18. SUPPLEMENTARY NOTES
APPROVED FOR PUBLIC RELEASE: IAW AFR 190-17

LYNN E. WOLAVER
Dean for Research and
Professional Development
16 SEPT 1982 AFIT, Wright-Patterson AFB OH

19. KEY WORDS (Continue on reverse side if necessary and identify by block number)

20. ABSTRACT (Continue on reverse side if necessary and identify by block number)

ATTACHED

82 09 27 1[illegible]

DD FORM 1 JAN 73 1473 EDITION OF 1 NOV 65 IS OBSOLETE

UNCLASS

SECURITY CLASSIFICATION OF THIS PAGE (When Data Entered)

Accession For
NTIS GRA&I ☒
DTIC TAB ☐
Unannounced ☐
Justification
By
Distribution/
Availability Codes
Dist | Avail and/or Special
A

DTIC COPY INSPECTED 2

REGENERATIVE SIMULATION USING INTERNAL CONTROLS

Publication No. _____

Jan Denise Eakle, Ph.D.
The University of Texas at Austin, 1982

Supervising Professor: James R. Wilson

This study concerns the application of concomitant control variables to the simulation of regenerative queueing systems. A new procedure is developed to exploit the asymptotic properties of appropriately defined controls in order to improve the efficiency of system performance estimators obtained from a simulation experiment. Two types of ("standardized variates") are formulated and their joint convergence in distribution to multivariate normality is established. This result is the basis for applying multinormal regression theory to the construction of valid confidence intervals for steady-state parameters. A two-stage procedure is developed. In the first stage, standardized flow variates are applied to the denominator of the classical regenerative ratio estimator to reduce its inherent bias. In the second stage,

standardized service-time variates are applied to the numerator of the new ratio to reduce the variance of the resulting double multivariate ratio estimator. A new multivariate test for normality is also developed based upon the univariate Shapiro-Wilk test. The complete variance reduction procedure is validated on an analytically tractable closed Jackson queueing system. On the basis of experimental results together with the established theoretical characteristics of the technique, guidelines are presented for the practical application of the method.

REGENERATIVE SIMULATION USING INTERNAL CONTROLS

APPROVED BY SUPERVISORY COMMITTEE:

James R. Wilson

Paul A. Jensen

William G. Leavy

Robert B. Sack

REGRENERATIVE SIMULATION USING INTERNAL CONTROLS

by

JAN DENISE EAKLE, B.S., M.S.

DISSERTATION

Presented to the Faculty of the Graduate School of

The University of Texas at Austin

in Partial Fulfillment

of the Requirements

for the Degree of

DOCTOR OF PHILOSOPHY

THE UNIVERSITY OF TEXAS AT AUSTIN

December, 1982

Copyright

by

Jan Denise Eakle

1982

To T.M., T.J., and T.B.

ACKNOWLEDGEMENTS

Dr. James R. Wilson was the supervising professor for this research. Without his guidance and support, none of this would have been possible.

I also wish to thank Dr. W.G. Lesso, Dr. P.A. Jensen, and Dr. R. Sullivan for their assistance as members of my graduate committee.

REGENERATIVE SIMULATION USING INTERNAL CONTROLS

Publication No. _____

Jan Denise Eakle, Ph.D.
The University of Texas at Austin, 1982

Supervising Professor: James R. Wilson

This study concerns the application of concomitant control variables to the simulation of regenerative queueing systems. A new procedure is developed to exploit the asymptotic properties of appropriately defined controls in order to improve the efficiency of system performance estimators obtained from a simulation experiment. Two types of "standardized variates" are formulated and their joint convergence in distribution to multivariate normality is established. This result is the basis for applying multinormal regression theory to the construction of valid confidence intervals for steady-state parameters. A two-stage procedure is developed. In the first stage, standardized flow variates are applied to the denominator of the classical regenerative ratio estimator to reduce its inherent bias. In the second stage,

standardized service-time variates are applied to the numerator of the new ratio to reduce the variance of the resulting double multivariate ratio estimator. A new multivariate test for normality is also developed based upon the univariate Shapiro-Wilk test. The complete variance reduction procedure is validated on an analytically tractable closed Jackson queueing system. On the basis of experimental results together with the established theoretical characteristics of the technique guidelines are presented for the practical application of the method.

TABLE OF CONTENTS

		Page
Chapter I	Introduction.	1
1.1	Estimating Mean Response Time in the M/M/1 Queue.	2
1.2	Problem Statement.	4
1.3	Objectives of the Research	6
1.4	Organization.	7
Chapter II	Literature Review.	8
2.1	The Regenerative Method.	8
2.2	Variance Reduction Techniques.	20
2.2.1	Stratified Sampling.	20
2.2.2	Control Variates	24
2.2.3	Importance Sampling.	29
2.2.4	Antithetic Variates.	34
2.2.5	Common Random Numbers.	36
2.3	Use of Control Variables in Regenerative Analysis	40
Chapter III	Procedures for Improving Bias and Confidence Interval Coverage Problems in Controlled Regenerative Analysis	53

3.1 Concomitant Control Variates 54

3.1.1 Selection of Controls 54

3.1.2 Theoretical Development of the Joint Distribution of Standardized Variables. . . . 57

3.2 An examination of Bias and Confidence Interval Coverage 62

3.2.1 Background. 63

3.2.2 Theoretical Examination of Bias in the Top-Controlled Estimator. 65

3.2.3 A Technique for Controlling Bias. 67

3.2.4 A Two-Stage Procedure for Controlling Bias and Variance. 69

3.3 Development of a Test for Multivariate Normality 75

3.3.1 Analysis of Previously Proposed Tests 76

3.3.2 Motivation for the Proposed Test. 87

3.3.3 A Multivariate Normality Test 90

Chapter IV Experimental Procedure 95

4.1 Selection of Experimental Systems 95

4.2 Performance Measures. 104

4.3 Selection of Experimental Parameters. 110

4.4 Validation Procedure. 112

4.4.1 Results for the M/M/1 Queue 112

4.4.2 Results for (s,S) Inventory Models. 114

4.4.3 Results for Closed Jackson Queueing Systems 115

4.4.4 Results for the GERT Analysis 119

4.4.5 Selection of Ratio Estimators 123

Chapter V Experimental Results. 130

5.1 Demonstration of Bias and Coverage Problems. 130

5.2 Experimental Results for the Two-Stage Procedure 142

5.3 Guidelines for Using the Developed Procedures. 146

5.3.1 Insuring Convergence of Concomitant Variates. 148

5.3.2 Selection of Controls 151

5.3.3 Follow-Up Analysis. 152

Chapter VI Summary, Conclusions, and Recommendations. 154

6.1 Research Overview 154

6.2 Recommendations for Future Research 156

Appendix 157

References 171

LIST OF TABLES

Table	Title	Page
1.1	Required Sampling Volume for M/M/1 Waiting Times.	5
4.1	Service Center Parameters for Systems 3 and 4.	113
4.2	Branching Probabilities for Systems 3 and 4.	113
4.3	Values for Response Variables for Model 2.	116
4.4	CAN-Q Results for Model 4	121
5.1	Tour-Batching Used in Experimentation. . .	132
5.2	Bias in Ratio Estimators for System 1. . .	135
5.3	Variance Reduction Percentages Achieved in System 1.	135
5.4	Coverage of Nominal 90% Confidence Intervals for System 1	136
5.5	Bias in the Point Estimator for System 2	136
5.6	Variance Reduction Percentages Achieved in System 2.	137
5.7	Coverage of Nominal 90% Confidence Intervals for System 2	137
5.8	Bias in the Point Estimator for System 3	139
5.9	Variance Reduction Percentages Achieved in System 3.	139

Page

5.10 Coverage of Nominal 90% Confidence Intervals for System 3 140

5.11 Standardized Control Variates Selected for Use in System 4. 146

5.12 Bias in the Ratio Estimator for System 4 146

5.13 Variance Reduction Percentages Achieved in System 4. 147

5.14 Coverage of Nominal 90% Confidence Intervals in System 4. 147

LIST OF FIGURES

Figure	Title	Page
4.1	Correlation Function ρ_j for System 1. . . .	98
4.2	Correlation Function ρ_j for System 2. . . .	99
4.3	Central Server Model.	100
4.4	Machine Repair Model.	102
4.5	GERT Model of Response Time Process for System 4.	120

CHAPTER I

INTRODUCTION

Chisholm's Third Law:

Proposals, as understood by the proposer, will be judged otherwise by others.

Lilly's Metalaw:

All laws are simulations of reality.

Levy's Ninth Law:

Only God can make a random selection.

Both discrete-event and continuous simulations are frequently used to model analytically intractable stochastic systems. Examples of such systems are city traffic flow, telecommunications networks, military war games, and computer time-sharing systems. Due to the complexity of these systems, simulation is often the only viable means of studying them. There are, however, significant tactical problems involving autocorrelated outputs and initialization bias which complicate the analysis of such simulations. The regenerative method is a recently developed technique for analyzing simulation output which promises to alleviate these problems.

1.1 Estimating Mean Response Time in the M/M/1 Queue

To illustrate the use of the regenerative method, we will consider the estimation of the expected stationary waiting time μ_W in an M/M/1 queue. The process to be analyzed is $\{W_j : j \geq 1\}$, the waiting times of successive customers. In the regenerative method, times at which an arriving customer finds the system empty and idle are of particular interest. Given an arrival rate λ, a service rate μ, and a traffic intensity $\rho = \lambda/\mu < 1$, it can be shown [CRAN74(I)] that with probability 1 there is an increasing sequence of integer-valued random variables $\beta_1, \beta_2, \beta_3, \ldots$ such that $W_{\beta_j} = 0$ for all positive integers j. That is, any customer numbered β_j will arrive to find the system empty and will be serviced immediately. The arrival times for the customers indexed by β_j define regeneration points for the system. At each of these points, system operation begins anew with the same probabilistic structure that governed it at the time of the first arrival. Thus, the process W_j may be partitioned into blocks or cycles $\{W_i : \beta_j \leq i < \beta_{j+1}\}$ which are independent and identically distributed (iid). Any measurements taken on these cycles will also be iid. Let

$$Y_i = \sum_{j=\beta_i}^{\beta_{i+1}-1} W_j \text{ and } \alpha_i = \beta_{i+1} - \beta_i,$$

where Y_i represents the total waiting time of customers served in the ith block and α_i denotes the number of customers in the ith block. Then the random vectors (Y_i, α_i) are iid. From regenerative analysis, we have [CRAN75(I)]

$$W_j \xrightarrow{\mathcal{L}} W \text{ and } \mu_W = E[W] = E[Y_1]/E[\alpha_1].$$

Given the observations $(Y_i, \alpha_i) : 1 \leq i \leq n$ of n simulated cycles, we compute the sample means $\overline{Y}$ and $\overline{\alpha}$ in order to form the following ratio estimator of μ_W:

$$\hat{r} = \overline{Y}/\overline{\alpha}$$

By computing the sample variance S^2 of the quantities $(Y_i - \hat{r}\alpha_i) : 1 \leq i \leq n$, we also obtain an approximate $100(1 - \delta)\%$ confidence interval for μ_W[CRAN77]:

$$r \pm z_{1-\delta/2} \cdot \frac{S}{\overline{\alpha}\sqrt{n}}.$$

If we require that the half-length of this interval fall within some proportion d of the point being estimated, then the required number of cycles is given by [DALE68]

$$n = (z_{1-\delta/2}/d)^2(\rho^3 - 4\rho^2 + 5\rho + 2)/[\rho(1 - \rho)],$$

and the expected amount of simulated time to obtain n cycles is

$$t = (z_{1-\delta/2}/d)^2(\rho^3 - 4\rho^2 + 5\rho + 2)/(\rho\ (1 - \rho)^2).$$

Table 1.1 shows the required number of cycles for various traffic intensities ρ with $\lambda = 1$ when we seek a 95% confidence interval whose half-length is 5% of the estimand μ_W. Although the M/M/1 queue is not typical of most real-world systems because it is analytically tractable, it is still representative of the computational costs required by the regenerative method of simulation.

1.2 Problem Statement

Given a regenerative queueing simulation, the problem we face is to reduce the sampling costs required to obtain acceptable precision in simulation-based estimators. To do so, we must choose applicable <u>variance reduction techniques</u> (VRTs) which provide increased precision while maintaining or reducing the simulation run

TABLE 1.1

REQUIRED SAMPLING VOLUME FOR M/M/1 WAITING TIMES

WITH $\alpha = .05$, $d = .05$, $\lambda = 1.0$

Traffic Intensity ρ	Number of Cycles n	Expected Run Length t
.01	318,132	321,345
.05	72,469	76,283
.10	42,019	46,688
.15	32,099	37,764
.20	27,353	34,191
.25	24,714	32,952
.30	23,174	33,106
.40	21,923	36,538
.50	22,282	44,563
.60	24,178	60,445
.70	28,413	94,711
.80	37,955	189,776
.90	68,107	681,073
.95	129,316	2,586,327
.99	620,849	62,084,898

length. In applying these VRTs, we are constrained by the requirement for valid confidence intervals. Much recent research has been devoted to VRTs in this setting. Most of this research has produced mixed results.

1.3 Objectives of the Research

The goals of this research are the development, implementation, and evaluation of techniques to improve the efficiency of regenerative queueing simulations. We have chosen to restrict ourselves to VRTs which do not alter the sample path generated by a simulation model. We sought to employ robust procedures which make effective use of auxiliary information produced by the simulation and which may be applied to a variety of real-world queueing situations. In light of this, we have developed a regression-based technique using internal control variables to achieve increased efficiency in the simulation of regenerative queueing networks and we have established the asymptotic properties of the procedure which ensure its validity and efficiency. This method is evaluated in several selected experimental systems to demonstrate its potential value.

1.4 Organization

Chapter II presents the literature review and other necessary background information. In Chapter III we have developed a variance reduction method and its theoretical properties. In addition, this chapter contains an analysis of various statistical tests for multivariate normality and a proposal for a new test. Chapter IV presents the experimental layout used to validate and evaluate the methodology developed in this research. Chapter V is devoted to a summary and analysis of the experimental results along with guidelines for the application of the techniques. Chapter VI contains an overall review of the research findings and recommendations for future research.

CHAPTER II

LITERATURE REVIEW

2.1 The Regenerative Method

Crane and Iglehart pioneered the regenerative method in a series of recent papers [CRAN74(I), (II), 75(III), (IV), IGLE75, 76]. The first of these deals with the general multiserver queue.

Consider a GI/G/1 queue with service rate μ, arrival rate λ, and traffic intensity $\rho = \lambda/\mu < 1$. For simplicity we assume that the zeroth customer arrives at time $t = 0$ and finds the system empty and idle. In general, the ith customer arrives at time t_i, experiences a waiting time W_i, and finally receives a service of duration v_i. The interarrival times are given by $u_i = t_i - t_{i-1}$, $i \geq 1$. We assume that the two sequences $\{u_i : i \geq 1\}$ and $\{v_i : i \geq 0\}$ are mutually independent and consist of iid random variables.

For this system, variates of interest include $Q(t)$, the number of customers in the system at time t; W_i, the waiting time of the ith customer; $W(t)$, the workload the server sees at time t; $B(t)$, the amount of time during the period $[0,t]$ in which the server is

busy; and $D(t)$, the number of customers who completed service during the period $[0,t]$. Let $X_n = v_{n-1} - u_n$ and $S_n = \sum_{i=1}^{n} X_i$ with $S_0 = 0$. Then for the process $\{W_n : n \geq 0\}$, we have the following recursive relationship:

$$W_0 = 0 \text{ and } W_n = [W_{n-1} + X_n]^+, \; n \geq 1 \tag{2.1}$$

where $[a]^+ \equiv \max\{0,a\}$. It can be shown that with probability one there exists a strictly increasing sequence of integer-valued random variables $\{\beta_k : k \geq 0\}$ such that $W_{\beta_k} = 0$ for $k \geq 0$. Customers numbered $\{\beta_k\}$ are those arriving to find the system empty and idle. The arrival of the customer with index β_k initiates the kth <u>busy period</u> during which the server remains occupied. At the end of this busy period, the kth <u>idle period</u> begins and lasts until the customer indexed by β_{k+1} arrives. A busy period and its succeeding idle period form a <u>busy cycle</u> or <u>tour</u>. The number of customers served in the kth busy period is given by $\alpha_i = \beta_i - \beta_{i-1}$, $i \geq 1$.

Using Crane and Iglehart's notation, we let $\underset{\sim}{X}_k = (v_{k-1}, u_k)$ and $\underset{\sim}{V}_k = (\alpha_k, \underset{\sim}{X}_{\beta_{k-1}+1}, \underset{\sim}{X}_{\beta_{k-1}+2}, \ldots, \underset{\sim}{X}_{\beta_k})$. The $\{\underset{\sim}{V}_k : k \geq 1\}$ are iid and allow the observations to

be divided into iid cycles. On each cycle we will observe the following:

$$\eta_k = \sum_{i=\beta_{k-1}}^{\beta_k - 1} v_i \,, \tag{2.2}$$

$$\xi_k = \sum_{i=\beta_{k-1}+1}^{\beta_k} u_i \,, \tag{2.3}$$

$$\nu_k = \xi_k - \eta_k \,, \tag{2.4}$$

$$Y_k(1) = \sum_{j=1}^{\alpha_k - 1} (S_{\beta_{k-1}+j} - S_{\beta_{k-1}}) \,, \tag{2.5}$$

$$Y_k(2) = Y_k(1) + \eta_k \,, \tag{2.6}$$

and

$$Y_k(3) = \sum_{j=0}^{\alpha_k - 1} [(S_{\beta_{k-1}+j} - S_{\beta_{k-1}}) v_{\beta_{k-1}+j} + \frac{1}{2} (v_{\beta_{k-1}+j})^2] \,, \tag{2.7}$$

where η_k, ξ_k, and ν_k, respectively, represent the durations of the busy period, busy cycle, and idle

period of the kth regenerative cycle; $Y_k^{(2)}$ and $Y_k^{(3)}$, respectively, denote the integrals of $Q(t)$ and $W(t)$ over the kth cycle. Note that all of these random variables form iid sequences.

The regenerative property of the GI/G/1 queue insures that the processes $\{W_j\}$, $\{Q(t)\}$, and $\{W(t)\}$ converge in distribution to corresponding steady-state variates:

$$W_n \xrightarrow{\mathcal{L}} W, \; Q(t) \xrightarrow{\mathcal{L}} Q \text{ , and } W(t) \xrightarrow{\mathcal{L}} W^* \text{ .}$$

From stochastic processes theory, we have:

$$E[\alpha_k] = \exp\left(\sum_{n=1}^{\infty} P\{S_n > 0\}/n\right) , \tag{2.8}$$

$$E[\eta_k] = E[\alpha_k]/\mu , \tag{2.9}$$

$$E[\xi_k] = E[\alpha_k]/\lambda , \tag{2.10}$$

$$E[\nu_k] = (1 - \rho)E[\alpha_k]/\lambda , \tag{2.11}$$

$$E[Y_k^{(1)}] = E[W]E[\alpha_k] , \tag{2.12}$$

$$E[Y_k^{(2)}] = (\lambda E[W] + \rho)E[\xi_k] = E[Q]E[\xi_k] , \tag{2.13}$$

and

$$E[Y_k(3)] = (\rho E[W] + \tfrac{1}{2}\lambda E[v_o^2])E[\xi_k]$$

$$= E[W^*]E[\xi_k] \ . \qquad (2.14)$$

Thus from our observed random variables, we may calculate point estimates for the expected values of W, Q, and W^*.

Crane and Iglehart [CRAN75(III)] generalized their analysis of multi-server queues to discrete-event simulation models. We now let $\underset{\sim}{X}(t)$ denote the model status vector at (simulated) time t. If $\{\underset{\sim}{X}(t) : t \geq 0\}$ is a regenerative process, then, subject to mild regularity conditions, Crane and Iglehart showed that a steady-state system status vector $\underset{\sim}{X}$ exists such that $\underset{\sim}{X}(t) \xrightarrow{\mathcal{L}} \underset{\sim}{X}$.

If the goal of the simulation is to estimate some steady-state performance measure $r = E[f(X)]$, then successive regeneration epochs $\{\beta_j\}$ of the simulation model are observed in order to accumulate the following measurements over each cycle:

$$Y_j = \int_{\beta_j}^{\beta_{j+1}} f(\underset{\sim}{X}(t))dt \text{ and } \alpha_j = \beta_{j+1} - \beta_j \ . \qquad (2.15)$$

The random vectors $\{(Y_j, \alpha_j) : j \geq 1\}$ are therefore iid. Crane and Iglehart show that under certain mild regularity conditions,

$$r = E[Y_1]/E[\alpha_1] \ . \tag{2.16}$$

For some systems these regularity conditions are that the distribution function of α_1 is not arithmetic and that $0 < E[\alpha_1] < \infty$.

Suppose that n regenerative cycles $\{(Y_j, \alpha_j) : 1 \leq j \leq n\}$ have been observed. Let $V_j = Y_j - r\alpha_j$. The V_j's are iid with mean zero. If $\overline{V}$, $\overline{Y}$, and $\overline{\alpha}$ are the sample means of V, Y, and α, respectively, then $\overline{V} = \overline{Y} - r\overline{\alpha}$. If $0 < \sigma^2 = \mathrm{Var}[V] < \infty$, the Central Limit Theorem gives us

$$\lim_{n\to\infty} P\left\{\frac{\overline{V}}{\sigma / \sqrt{n}}\right\} \leq z = \Phi(z) \text{ for all } z \tag{2.17}$$

where Φ is the standard normal distribution function. This result may be written as

$$\lim_{n\to\infty} P\left\{\frac{\overline{Y} - r\overline{\alpha}}{\sigma / \sqrt{n}}\right\} \leq z = \Phi(z) \ , \tag{2.18}$$

or

$$\lim_{n\to\infty} P\left\{\frac{\hat{r} - r}{\sigma/(\sqrt{n}\cdot\bar{\alpha})}\right\} \leq z = \Phi(z) , \qquad (2.19)$$

where $\hat{r} = \bar{Y}/\bar{\alpha}$. In order to obtain a confidence interval from (2.19), we must estimate σ. Now,

$$\sigma^2 = E[V_1] = E[(Y_1 - r\alpha_1)^2]$$

$$= Var[Y_1] - 2rCov[Y_1,\alpha_1] + r^2Var[\alpha_1] . \qquad (2.20)$$

Let S_Y^2 and S_α^2 be the sample variances of Y and α, respectively, and let $S_{Y\alpha}^2$ be the sample covariance of Y and α:

$$S_Y^2 = [1/(n-1)] \sum_{j=1}^{n} (Y_j - \bar{Y})^2,$$

$$S_\alpha^2 = [1/(n-1)] \sum_{j=1}^{n} (\alpha_j = \bar{\alpha})^2 ,$$

and

$$S_{Y\alpha}^2 = [1/(n-1)] \sum_{j=1}^{n} (Y_j - \bar{Y})\ (\alpha_j - \bar{\alpha})^2 . \qquad (2.21)$$

Let $S^2 = S_Y^2 - 2\hat{r}S_{Y\alpha}^2 + \hat{r}^2S_\alpha^2$; then we have $S^2 \xrightarrow[n\to\infty]{} \sigma^2$ with probability 1, and it follows that

$$\lim_{n\to\infty} P\left|\frac{\hat{r} - r}{S/(\sqrt{n}\ \bar{\alpha})}\right| \leq z = \Phi(z) \text{ for all } z . \qquad (2.22)$$

An approximate $100(1 - \delta)$ percent confidence interval is then given by

$$\hat{r} + z_{1-\delta/2} \cdot \frac{S}{\sqrt{n}\,\bar{\alpha}} \tag{2.23}$$

where $z_{1 - \delta/2} = \Phi^{-1}(1 - \delta/2)$.

Crane and Iglehart [CRAN75(III)] point out that it may be possible to find a second sequence of random variables $\{\beta_i' : i \geq 0\}$ which also define regeneration points. If confidence intervals with lengths $I(t)$ and $I'(t)$, respectively, are constructed from the sequences $\{(Y_i, \alpha_i)\}$ and $\{(Y_i', \alpha_i')\}$ each of which are based on a simulation run length t, then $I(t)/I'(t) \rightarrow 1$ with probability 1. Thus, if a simulator may choose between two or more regeneration sequences, the lengths of the confidence intervals will be approximately the same for large t.

The preceding discussion was based upon the assumption that a return state can be found with the property that the expected time between returns is finite and small enough so that a reasonable number of cycles will be observed during the simulation. This may not always be the case. Crane and Iglehart [CRAN75(IV)] offer some approximation techniques for obtaining

confidence intervals when the simulation does not contain a renewal process.

The first method presented to deal with this problem is complete state-space discretization. For a queueing system, this technique requires the approximation of the interarrival and service time distributions which may only take on values $\{0, \tau, 2\tau, \ldots\}$, $\tau > 0$. The choice of τ is critical to this method. The smaller τ is chosen, the closer the new process will mimic the original. A smaller τ will also, however, result in fewer observed cycles within a fixed simulation run.

A second method for handling the regeneration problem is partial state-space discretization. Consider the customer waiting times $\{W_n : n \geq 1\}$. We shall modify the original process as follows:

$$W_n' = \begin{cases} d, \text{ if } d - \varepsilon \leq W_n \leq d + \varepsilon \\ W_n, \text{ otherwise} \end{cases} \tag{2.24}$$

where d is a fixed waiting time and $\varepsilon > 0$ is the half-length of the "trapping interval" around d. The entry times $\{\beta_i'(d) : i \geq 1\}$ to d are the regeneration times for the modified process. The confidence interval methods developed earlier may now be applied to the modified process. As $\varepsilon \to 0$, the modified process

should approximate the original process more closely, but fewer of the required regeneration cycles will be observed.

The third technique suggested by Crane and Iglehart is stochastic bounding. This method requires the simulator to define two new processes which bound the original. Thus, in finding confidence intervals for the new processes, a confidence interval for the original may be found. Stochastic bounding uses the same scheme as partial state-space discretization in that it is based upon selecting a trapping interval $[d - \varepsilon, d + \varepsilon]$ about d. For the customer waiting time, our new processes are

$$W_n' = \begin{cases} d - \varepsilon, \text{ if } d - \varepsilon \leq W_n \leq d + \varepsilon \\ W_n, \text{ otherwise} \end{cases} \tag{2.25}$$

and

$$W_n'' = \begin{cases} d + \varepsilon, \text{ if } d - \varepsilon \leq W_n \leq d + \varepsilon \\ W_n, \text{ otherwise .} \end{cases} \tag{2.26}$$

These processes bound the original:

$$P\{W_n'' \leq w\} \leq P\{W_n \leq w\} \leq P\{W_n' \leq w\} \tag{2.27}$$

for all $w \geq 0$; and if $f : R^+ \to R$ is a measurable, monotonically increasing function,

$$E[f(W')] \leq E[f(W)] \leq E[f(W'')] \tag{2.28}$$

where $W'_n \xrightarrow{\mathcal{L}} W'$ and $W''_n \xrightarrow{\mathcal{L}} W''$. Using $d - \varepsilon$ and $d + \varepsilon$ as the regenerative states for $\{W'_n\}$ and $\{W''_n\}$, respectively, we find their $100(1 - \delta/2)\%$ confidence intervals in the standard manner. If we take the lower limit of the confidence interval for $E[f(W')]$ and the upper limit of the confidence interval for $E[f(W'')]$ to construct a confidence interval for $E[f(W)]$, we have a <u>minimum</u> of $100(1 - \delta)\%$ coverage.

The last method suggested by Crane and Iglehart for approximating a regenerative system is the use of approximate regeneration times. As in partial state space discretization, the entry times $\{\beta'_i(d) : i \geq 1\}$ to a trapping interval $[d - \varepsilon, d + \varepsilon]$ are taken as the regeneration times. Observations of the process are collected as for any regenerative system, and confidence intervals are constructed by the standard method. For a small ε, this method produces results similar to those which would be obtained from the original process in the normal manner. The blocks for this modified process are not iid. If the correlation between successive blocks

is calculated, the simulator can get some idea of the validity of his confidence interval.

Gunther and Wolff [GUNT80] recently proposed the <u>Almost Regenerative Method</u> for handling regenerative processes which have infrequent regeneration points. For simplicity they assumed that at each regeneration point β_n there is a change of state in the process $\{\underset{\sim}{X}(t)\}$ from some fixed state u to some fixed state v, u, v ϵ E, the state space of $\underset{\sim}{X}$. (They indicate that this is not necessarily a requirement, but that it gives them a method to compare their technique to the regenerative method.) Let U and V be disjoint subsets of E. (U and V do not have to partition E.) Let β'_n denote the time of the nth transition of $\{\underset{\sim}{X}(t)\}$ from any state in U to any state in V. For the Almost Regenerative Method, the $\{\beta'_n : n \geq 0\}$ are the regeneration points and the duration of the nth cycle is $\alpha'_n = \beta'_n - \beta'_{n-1}$, $n \geq 1$. The process $\{\underset{\sim}{X}(t)\}$ is observed for m' "cycles" and the pairs $\{(Y'_i, \alpha'_i)\}$ are collected. The estimate of E[f(X)] is given by

$$\hat{r}' = \overline{Y}'/\overline{\alpha}' . \tag{2.29}$$

If the underlying process $\{\underset{\sim}{X}(t)\}$ is regenerative and u ϵ U and v ϵ V, Gunther and Wolff were able to show

that $\hat{r}'$ is a consistent estimator of $E[f(\underset{\sim}{X})]$ with an asymptotically normal distribution.

Gunther and Wolff offered total amount of work in the network and number in system as methods of selecting U and V. Their selection is based upon desiring to estimate specific response variables. The choice of an appropriate U and V is critical, and an improper selection may give uncertain results. For well-chosen U and V, they were able to obtain smaller variances than the standard regenerative method, although they point out that this may be directly attributed to the larger number of cycles which they were able to obtain.

2.2 Variance Reduction Techniques

We have seen that large sample sizes are frequently required in regenerative simulation. We shall next examine some common variance reduction techniques which may be employed to reduce run length.

2.2.1 Stratified Sampling

In stratified sampling, observations are collected on the simulation response Y and a stratification variable X which has a known distribution and a strong but highly nonlinear dependence on Y. Strata

are formed by partitioning the range of X into L strata $\{S_k : 1 \leq k \leq L\}$. Each stratum is then examined separately to obtain a corresponding stratified random sample of the response Y. For $1 \leq k \leq L$ let

$$W_k = P\{X \varepsilon S_k\} , \tag{2.30}$$

$$\mu_{Yk} = E[Y | X \varepsilon S_k] , \tag{2.31}$$

and

$$\sigma^2_{Yk} = E[(Y - \mu_{Yk})^2 | X \varepsilon S_k] . \tag{2.32}$$

Suppose we sample n_k simulation responses $\{Y_{kj} : 1 \leq j \leq n_k\}$ from each stratum S_k. The sample mean for each stratum is given by

$$\bar{Y}_k = (1/n_k) \sum_{j=1}^{n_k} Y_{kj} , \tag{2.33}$$

and the stratified estimator of μ_Y is

$$\bar{Y}_s = \sum_{k=1}^{L} W_k \bar{Y}_k . \tag{2.34}$$

$\bar{Y}_s$ is an unbiased estimator and has variance

$$\mathrm{Var}[\overline{Y}_s] = \sum_{k=1}^{L} W_k^2 \sigma_{Yk}^2 / n_k \ . \tag{2.35}$$

If sampling over the strata is done proportionally, i.e., $n_k = nW_k$, $1 \leq k \leq L$, then $\overline{Y}_{sp}$ denotes the stratified estimator of μ_Y; and we have:

$$\mathrm{Var}[\overline{Y}_{sp}] = (1/n) \sum_{k=1}^{L} W_k \sigma_{Yk}^2$$

$$= \sigma_Y^2/n - (1/n) \sum_{k=1}^{L} W_k (\mu_{Yk} - \mu_Y)^2 \ . \tag{2.36}$$

If the stratum means are not all equal, $\mathrm{Var}[\overline{Y}_{sp}]$ will be strictly less than the variance σ_Y^2/n of the mean of the unstratified sample. If the within-stratum variances $\{\sigma_{Yk}^2\}$ widely differ, it is desirable to sample more heavily from the strata with larger variability. Using the optimal (Neyman) sampling scheme

$$n_k = n \cdot (W_k \sigma_{Yk}) / \left(\sum_{\ell=1}^{L} W_\ell \sigma_{Y\ell} \right) \ , \ 1 \leq k \leq L \ , \tag{2.37}$$

the maximum variance reduction is achieved. This allocation presupposes knowledge of the $\{\sigma_{Yk}^2\}$. In most simulations this is unknown but may be estimated in

preliminary runs. Once the allocations have been established, the sample variances

$$S_{Yk}^2 = [1/(n_k - 1)] \sum_{j=1}^{n_k} (Y_{kj} - \overline{Y}_k)^2 \tag{2.38}$$

may be calculated and used to estimate $Var[\overline{Y}_s]$:

$$Var[\overline{Y}_s] = \sum_{k=1}^{L} W_k^2 S_{Yk}^2 / n_k \ . \tag{2.39}$$

If Y_k is normally distributed with mean μ_{Yk} and variance σ_{Yk}^2, then an approximate $100(1 - \delta)\%$ confidence interval for μ_Y is given by

$$\overline{Y}_s \pm t_{1-\delta/2}(n_e \text{ d.f.}) \cdot (\hat{V}ar[Y_s])^{1/2} \tag{2.40}$$

where n_e is given by [WELC56]

$$n_e = (\hat{V}ar[\overline{Y}_s])^2 / \sum_{k=1}^{L} (W_k S_{Yk})^4 / [n_k^2 (n_k - 1)] \ . \tag{2.41}$$

Stratification is generally difficult to apply in simulation. While many methods for large variance reductions have been devised for specific cases, there are no general techniques for queueing simulations.

2.2.2 Control Variates

Control variates are random variables with known expectations which have a strong linear correlation with some response variable of interest. To apply control variables to a simulation, a new estimator is formed which is the original estimator plus a linear combination of the control variables.

Let $\underset{\sim}{C}$ be a column vector of Q control variables

$$\underset{\sim}{C} = [C_1, \ldots, C_Q]^T \tag{2.42}$$

with expectation vector $\underset{\sim}{\mu}_C$. A controlled estimator of the simulation response Y is given by

$$Y(\underset{\sim}{a}) = Y - \underset{\sim}{a}^T(\underset{\sim}{C} - \underset{\sim}{\mu}_C) \ . \tag{2.43}$$

$Y(\underset{\sim}{a})$ is an unbiased estimator of μ_Y for any fixed vector $\underset{\sim}{a}$ of control coefficients, and its variance is minimized with the optimal control coefficient vector

$$\underset{\sim}{a}_o = \underset{\sim}{\Sigma}_C^{-1}\underset{\sim}{\sigma}_{YC} \tag{2.44}$$

where $\underset{\sim}{\Sigma}_C$ is the covariance matrix of $\underset{\sim}{C}$ and $\underset{\sim}{\sigma}_{YC}$ is the column vector of covariances between Y and the components of $\underset{\sim}{C}$. The minimum variance obtained with $\underset{\sim}{a}_o$ is given by

$$\mathrm{Var}[Y(\underset{\sim}{a}_o)] = (1 - R^2_{YC})\mathrm{Var}[Y] \tag{2.45}$$

where

$$R^2_{YC} = \underset{\sim}{\sigma}^T_{YC}\underset{\sim}{\Sigma}^{-1}_C\underset{\sim}{\sigma}_{YC}/\mathrm{Var}[Y] \tag{2.46}$$

is the square of the coefficient of multiple correlation between Y and $\underset{\sim}{C}$.

Under ideal conditions,

$$Y(\underset{\sim}{a}_o) = \mu_Y + \varepsilon \tag{2.47}$$

where ε is an irreducible error term with expected value zero. Combining (2.43) and (2.47), we have the standard linear regression model

$$Y = \mu_Y + \underset{\sim}{a}^T_o(\underset{\sim}{C} - \underset{\sim}{\mu}_C) + \varepsilon. \tag{2.48}$$

If we make $K \geq Q + 1$ independent replications of the simulation and we let Y_k and C_k be the observed values from the kth run, then we will obtain K iid observations of the random vector.

$$\underset{\sim}{Z}_k = \begin{bmatrix} Y_k \\ \underset{\sim}{C}_k \end{bmatrix}, \quad 1 \leq k \leq K. \tag{2.49}$$

The $\{\underset{\sim}{Z}_k\}$ have mean vector

$$\underset{\sim}{\mu}_Z = \begin{bmatrix} \mu_Y \\ \underset{\sim}{\mu}_C \end{bmatrix} \tag{2.50}$$

and covariance matrix

$$\underset{\sim}{\Sigma}_Z = \begin{bmatrix} \sigma_Y^2 & \underset{\sim}{\sigma}_{YC} \\ \underset{\sim}{\sigma}_{YC} & \underset{\sim}{\Sigma}_C \end{bmatrix} \tag{2.51}$$

Let $$\underset{\sim}{X} = \begin{bmatrix} 1 & (c_{11} - \mu_1) & \cdots & (c_{Q1} - \mu_Q) \\ \vdots & \vdots & & \vdots \\ 1 & (c_{1K} - \mu_1) & \cdots & (c_{QK} - \mu_Q) \end{bmatrix} \tag{2.52}$$

and $$\underset{\sim}{\beta} = \begin{bmatrix} \mu_Y \\ \underset{\sim}{a}_o \end{bmatrix} . \tag{2.53}$$

Equation (2.48) may therefore be expressed as

$$\underset{\sim}{Y} = \underset{\sim}{X}\underset{\sim}{\beta} + \underset{\sim}{\varepsilon} . \tag{2.54}$$

The least squares estimator for $\underset{\sim}{\beta}$ is

$$\hat{\underset{\sim}{\beta}} = (\underset{\sim}{X}^T\underset{\sim}{X})^{-1}\underset{\sim}{X}^T\underset{\sim}{Y} . \tag{2.55}$$

Lavenberg [LAVE78] was able to show that the straightforward estimator

$$\hat{\underset{\sim}{a}}_o = \hat{\underset{\sim}{\Sigma}}_C^{-1}\underset{\sim}{\sigma}_{YC} \tag{2.56}$$

obtained by inserting sample covariances into (2.44) coincides with (2.55). The least squares estimator of μ_Y is therefore given by

$$\bar{\underset{\sim}{Y}}(\hat{\underset{\sim}{a}}_o) = \bar{Y} - \hat{\underset{\sim}{a}}_o^T(\bar{\underset{\sim}{C}} - \underset{\sim}{\mu}_C) \ . \tag{2.57}$$

This method of applying control variables has some problems. Since $\hat{\underset{\sim}{a}}_o$ is an estimate, minimum variance for $Y(\hat{\underset{\sim}{a}}_o)$ will not be achieved. The dependence between $\hat{\underset{\sim}{a}}_o$ and $\bar{\underset{\sim}{C}}$ generally produces a biased estimator of μ_Y. Additionally, dependence among the $Y_k(\hat{\underset{\sim}{a}}_o)$ prevents us from constructing a confidence interval using the t statistic. There are two methods available for handling these problems.

If $\underset{\sim}{Z}$ has a multivariate normal distribution, then the conditional distribution of Y given $\underset{\sim}{C} = \underset{\sim}{c}$ is univariate normal with

$$E[Y|\underset{\sim}{C} = \underset{\sim}{c}] = \mu_Y + \underset{\sim}{a}_o^T(\underset{\sim}{c} - \underset{\sim}{\mu}_C) \tag{2.58}$$

and

$$Var[Y|\underset{\sim}{C} = \underset{\sim}{c}] = (1 - R_{YC}^2)\sigma_Y^2 \ . \tag{2.59}$$

We may now construct a $100(1 - \delta)\%$ confidence interval for μ_Y:

$$\bar{Y}(\underset{\sim}{a}_o) \pm t_{1-\delta/2;K-Q-1}\hat{\sigma}s_{11}^{1/2} \tag{2.60}$$

where s_{11} is the row 1, column 1 entry of $(\underset{\sim}{X}^T\underset{\sim}{X})^{-1}$. Lavenberg [LAVE78] has provided an expression for the loss in variance reduction caused by estimating $\underset{\sim}{a}_o$:

$$\mathrm{Var}[\bar{Y}(\hat{\underset{\sim}{a}}_o)]/\mathrm{Var}[\bar{Y}(\underset{\sim}{a}_o)] = (K - 2)/(K - Q - 2) \tag{2.61}$$

when $K > Q + 2$.

A second technique for developing confidence intervals which is unconstrained by the distribution of Z is based on jackknifing. Let $\bar{Y}_{-k}(\hat{\underset{\sim}{a}}_o)$ be the estimator of the same form as $Y(\hat{\underset{\sim}{a}}_o)$ but with the single vector $\underset{\sim}{Z}_k$ omitted. The pseudo-values are

$$\theta_k = K\bar{Y}(\hat{\underset{\sim}{a}}_o) - (K - 1)\bar{Y}_{-k}(\hat{\underset{\sim}{a}}_o) \ , \ 1 \leq k \leq K \tag{2.62}$$

with the point estimate of μ_Y given by

$$\bar{\theta} = (1/K)\sum_{k=1}^{K}\theta_k \ . \tag{2.63}$$

The sample variance of the pseudo-values is

$$\hat{\sigma}_\theta^2 = [1/(K-1)] \sum_{k=1}^{K} (\theta_k - \bar{\theta})^2 . \tag{2.64}$$

Thus an approximate $100(1-\delta)\%$ confidence interval for μ_Y is

$$\bar{\theta} \pm t_{1-\delta/2;K-1} \cdot \hat{\sigma}_\theta / K^{1/2} . \tag{2.65}$$

Since $\bar{Y}(\hat{\underset{\sim}{a}}_o)$ is the least squares estimate of μ_Y, this technique is equivalent to jackknifing the point estimator of the first method.

2.2.3 Importance Sampling

Importance sampling completely replaces the original sampling process with another one. To correct any distortion which may arise, the observations are weighted so that their weighted average still gives an unbiased estimate of the mean of the original process. This technique is somewhat akin to stratified sampling in that the sampling process is changed and the observations are weighted differently.

Suppose the objective of the simulation is to evaluate the integral

$$\theta = \int_D g(\underset{\sim}{x}) f(\underset{\sim}{x}) d\underset{\sim}{x} \tag{2.66}$$

where $f(\underset{\sim}{x})$ is a density function. The crude Monte Carlo procedure would be to randomly sample n values of a variate $\underset{\sim}{X}$ having the density $f(\underset{\sim}{x})$ and take

$$\hat{\theta} = (1/n) \sum_{i=1}^{n} g(\underset{\sim}{X}_i) \tag{2.67}$$

as an estimator of θ. Let $h(\underset{\sim}{y})$ be another density function. Then

$$\theta = \int_D [(g(\underset{\sim}{y})f(\underset{\sim}{y}))/h(\underset{\sim}{y})]h(\underset{\sim}{y})d\underset{\sim}{y} \ . \tag{2.68}$$

Let

$$g^*(\underset{\sim}{y}) = (g(\underset{\sim}{y})f(\underset{\sim}{y}))/h(\underset{\sim}{y}) \ . \tag{2.69}$$

Then

$$E[g^*(\underset{\sim}{y})] = \int_D g^*(\underset{\sim}{y})h(\underset{\sim}{y})d\underset{\sim}{y} = \theta \ . \tag{2.70}$$

Thus, if we randomly sample n values of a variate $\underset{\sim}{Y}$ having the density $h(\underset{\sim}{y})$, our estimator of θ is

$$\hat{\theta}_h = (1/n) \sum_{i=1}^{n} g^*(\underset{\sim}{Y}_i) \ . \tag{2.71}$$

Minimum variance of the sampling estimator $\hat{\theta}_h$ is achieved when [KAHN53]

$$h^*(\underset{\sim}{y}) = [|g(\underset{\sim}{y})| f(\underset{\sim}{y})]/[\int_D |g(\underset{\sim}{u})| f(\underset{\sim}{u})d\underset{\sim}{u}] \ . \tag{2.72}$$

This implies, however, that we already know the value of θ. If $h(\underset{\sim}{y})$ is chosen to closely mimic $g(\underset{\sim}{y})f(\underset{\sim}{y})$, a large variance reduction may be obtained. If $h(\underset{\sim}{y})$ is chosen poorly, a variance increase may be observed.

Importance sampling was developed for use in Monte Carlo work and has given excellent results there [KAHN53, KLEI74]. However, the technique is more difficult to apply to discrete-event simulation and the results are frequently less favorable.

Moy [MOY65] proposed a "standard" type of new density function to be used in importance sampling for simulation. This "standard" function does not require extensive system analysis in order to select a density. Suppose X is the response variable from a simulation run which uses a sequence of (pseudo) random numbers $\{r_1, \ldots, r_m\}$ of length m. Given that m is fixed, we have:

$$X = g(r_1, \ldots, r_m) = g(\underset{\sim}{R}) \ . \tag{2.73}$$

The expected value of X is given by

$$\begin{aligned} E[X] &= \int_0^1 \ldots \int_0^1 g(r_1, \ldots, r_m) f(r_1, \ldots, r_m) \\ &\quad \cdot (dr_1 \ldots dr_m) \\ &= \int_{I^m} g(\underset{\sim}{R}) f(\underset{\sim}{R}) d\underset{\sim}{R} \ . \end{aligned} \tag{2.74}$$

Since the random numbers are independent, we have

$$f(r_1, \ldots, r_m) = f_1(r_1) \ldots f_m(r_m) , \qquad (2.75)$$

where f_j is the jth marginal density. These marginals must also be identical. Let $f_j(r_j) = s(r_j)$. Then

$$f(\underset{\sim}{R}) = f_1(r_1) \ldots f_m(r_m)$$

$$= s(r_1) \ldots s(r_m) . \qquad (2.76)$$

Since we are dealing with random numbers uniformly distributed over [0,1], we have

$$s(r_j) = \begin{cases} 1, & 0 \leq r_j \leq 1 \\ 0, & \text{otherwise} \end{cases} . \qquad (2.77)$$

Therefore,

$$f(\underset{\sim}{R}) = \begin{cases} 1, & 0 \leq r_j \leq 1 \text{ for all } j \\ 0, & \text{otherwise} \end{cases} . \qquad (2.78)$$

The expectation of X then is

$$E[X] = \int_{I^m} g(\underset{\sim}{R}) f(\underset{\sim}{R}) d\underset{\sim}{R}$$

$$= \int_0^1 \ldots \int_0^1 g(\underset{\sim}{R}) d\underset{\sim}{R}$$

$$= \int_0^1 \ldots \int_0^1 [g(\underset{\sim}{R})/h(\underset{\sim}{R})] h(\underset{\sim}{R}) d\underset{\sim}{R} . \qquad (2.79)$$

If $h(\underset{\sim}{R})$ is a joint density function, we may sample the input vector $\underset{\sim}{R}$ from $h(\underset{\sim}{R})$ and use the importance sampling estimator

$$g^*(\underset{\sim}{R}) = g(\underset{\sim}{R})/h(\underset{\sim}{R}) \ . \tag{2.80}$$

Kleijnen [KLE174] uses the term "importance numbers" to distinguish between stochastic variables with an alternative density $h(\underset{\sim}{R})$ and random numbers having the standard density (2.78). The variance of the importance sampling estimator is

$$\begin{aligned} \mathrm{Var}[g^*(\underset{\sim}{R})] &= \int_{I^m} [g^2(\underset{\sim}{R})f^2(\underset{\sim}{R}))/h^2(\underset{\sim}{R})]h(\underset{\sim}{R})d\underset{\sim}{R} \\ &\quad - (E[X])^2 \ . \end{aligned} \tag{2.81}$$

Selection of $h(\underset{\sim}{R})$ is again critical, and Moy recommended the sampling density

$$h(\underset{\sim}{R};\alpha) = \begin{cases} [\ln(\ )/(\alpha-1)]^m \exp\{\ln(\alpha)\cdot\Sigma r_j\} \\ \qquad\qquad 0 \le r_j \le 1 \text{ for all } j \\ 0 \quad , \text{ otherwise} \end{cases} \tag{2.82}$$

where α is a parameter which he estimated by using a numerical technique to solve a sample version of the equation

$$\frac{\partial}{\partial\alpha} \mathrm{Var}[g^*(\underset{\sim}{R};\alpha)] = 0 \ . \tag{2.83}$$

In M/M/1 queueing systems, Moy obtained variance reductions of 33% to 54% using this approach. He also found that the reduction was fairly insensitive to the estimate of α. He also showed that in a variety of systems $\hat{\alpha}$ remained fairly constant with a value of 1.12. In more complex systems, Moy's approach produced variance increases.

2.2.4 Antithetic Variates

The antithetic variate method is used to create negative correlation between paired observations of a response variable. One observation is generated from a sequence of input random numbers and the second observation uses the corresponding complimentary sequence of random numbers.

Suppose μ is the mean response of the system. If we make a pair of simulation runs using random numbers $\{r_i\}$ on the first run and $\{(1 - r_i)\}$ on the second in order to obtain the responses X_1 and X_2, then we estimate μ by

$$\bar{X} = \frac{1}{2}(X_1 + X_2) \ . \tag{2.84}$$

The variance of $\overline{X}$ is given by

$$\mathrm{Var}[\overline{X}] = \frac{1}{4}\,\mathrm{Var}[X_1] + \frac{1}{4}\,\mathrm{Var}\,[X_2] + \frac{1}{2}\,\mathrm{Cov}(X_1,X_2)\ . \tag{2.85}$$

Thus $\mathrm{Var}[\overline{X}]$ will be less than the mean of two independent replications if $\mathrm{Cov}(X_1,X_2)$ is negative.

Suppose X depends on Y and that X is a monotonically increasing function g_1 of Y. If Y is generated from the random number r by $Y = F_Y^{-1}(r)$, then Y is a monotonically increasing function g_2 of r. This implies that X is a monotonically increasing function $g_3 = g_1 \circ g_2$ of r. Thus a high value of r yields a high value of X, but its antithetic partner gives a low value of X. Therefore, intuitively, $g_3(r)$ and $g_3(1 - r)$ are negatively correlated.

In simulating a single-channel queueing system, Pritsker [PRIT79] points out that rather than using the actual antithetic pairs, the same effect is achieved by switching the random number streams used by the interarrival and service time processes. This results from the fact that long service times increase traffic intensity while long interarrival times will decrease it.

Antithetic variates should be used with some caution. If the response variable X has a symmetric distribution and the inverse transformation method is used to sample X, then the correlation between antithetic partners is -1 and a 100% variance reduction is realized. For non-symmetric distributions, the negative correlation is somewhat weaker, giving smaller reductions. In some cases, the use of antithetic variates can produce a variance increase.

2.2.5 Common Random Numbers

Common random numbers are employed when the simulator is studying more than one system and needs to choose among them. The responses of interest are not the individual system responses, but the differences between them. In order to determine these variations, we attempt to run the systems under the same conditions. To accomplish this, the same initial conditions should be used, and the same random number streams should be used to drive similar input processes (service times, interarrival times, etc.). This usage of common random numbers results in positive correlation between alternative system responses, say X_1 and X_2. The variance of their difference is then given by

$$\mathrm{Var}[X_1 - X_2] = \mathrm{Var}[X_1] + \mathrm{Var}[X_2] - 2\mathrm{Cov}(X_1, X_2) \ . \tag{2.86}$$

Compared to the standard approach of using two independent runs, a variance reduction will be observed if a positive correlation exists between X_1 and X_2. If large values of r result in large values of X_1 and X_2, then a variance reduction will occur.

In these simulations, the technique requires that we operate under similar conditions. In addition to the same initial conditions, this implies that the same random number should be used in each simulation at the same juncture in the operation of each process. Kleijnen [KLEI74] states that this "synchronization" could be maintained more easily if each stochastic input variable has its own random number stream. Garman [GARM71] suggests using a single random number stream but discarding some numbers to maintain synchronization.

Large variance reductions may be obtained using this method. (Kleijnen [KLEI74] cites reductions as great as 90 percent). This technique is advantageous in that additional programming and run time are minimal. This method has been used in conjunction with antithetic variates with mixed results.

2.2.6 Application of Conservation Equations

For regenerative queueing simulations, the use of conservation equations to estimate steady-state parameters can produce significant variance reductions. Carson and Law [CARS80] demonstrated their use for GI/G/s queues. In the GI/G/s simulation, values of interest include the mean delay in queue μ_W, the average number in queue μ_L, the mean sojourn time in system μ_D, the average number in system μ_Q, and the average amount of work in system, μ_{W^*}. Let λ be the arrival rate and μ be the service rate. We also define:

$Y_i^{(1)}$ = total waiting time of customers in the ith cycle,

α_i = number of customers served in the ith cycle,

ξ_i = length of the ith cycle,

η_i = total service time of customers in the ith cycle,

$Y_i^{(2)} = Y_i^{(1)} + \eta_i$,

and $Y_i^{(3)}$ = total work in the ith cycle.

Let $\overline{Y}(1)$, $\overline{\alpha}$, $\overline{\xi}$, $\overline{\eta}$, $\overline{Y}(2)$, and $\overline{Y}(3)$ be their respective sample means computed over n cycles. For direct

simulation, we use the following estimators as discussed in section 2.1:

$$\hat{\mu}_W = \overline{Y}(1)/\overline{\alpha} \ , \tag{2.87}$$

$$\hat{\mu}_L = \overline{Y}(1)/\overline{\xi} \ , \tag{2.88}$$

$$\hat{\mu}_D = \overline{Y}(2)/\overline{\alpha} \ , \tag{2.89}$$

$$\hat{\mu}_Q = \overline{Y}(2)/\overline{\xi} \ , \tag{2.90}$$

$$\hat{\mu}_{W*} = \overline{Y}(3)/\overline{\xi} \ . \tag{2.91}$$

The parameters μ_W, μ_L, μ_D, μ_Q, and μ_{W*} are related by the conservation equations for the system:

$$\mu_L = \lambda\mu_W \ , \tag{2.92}$$

$$\mu_D = \mu_W + (1/\mu) \ , \tag{2.93}$$

$$\mu_Q = \lambda\mu_D \ , \tag{2.94}$$

and $$\mu_{W*} = (\lambda/\mu)\mu_W + (\lambda/2)E[v^2] \ , \tag{2.95}$$

where v is the service time variate. For any simulation of a GI/G/s queue, λ, μ, and $E[v^2]$ are known. Thus, any estimate of any of the five parameters may be used to estimate any of the others. Carson and Law [CARS80] showed that the most efficient estimator of μ_W is $\hat{\mu}_W$, the direct simulation estimator; for other parameters,

the conservation equations were shown to give more efficient estimators:

$$\tilde{\mu}_L = \lambda\hat{\mu}_W \ , \tag{2.96}$$

$$\tilde{\mu}_D = \hat{\mu}_W + (1/\mu) \ , \tag{2.97}$$

$$\tilde{\mu}_Q = \lambda\hat{\mu}_W + (\lambda/\mu) \ , \tag{2.98}$$

and

$$\tilde{\mu}_{W*} = (\lambda/\mu)\hat{\mu}_W + (\lambda/2)E[v^2] \ . \tag{2.99}$$

Using this scheme with 1, 2, and 4 servers, Carson and Law [CARS80] obtained 0 to 99% variance reductions. An additional advantage of this method is the computational savings. Only $Y_i^{(1)}$ and α_i need to be collected and used to compute $\hat{\mu}_W$.

2.3 Use of Control Variables in Regenerative Analysis

Control variables have been applied to a variety of queueing networks with varying degrees of success. For some systems, many effective control variables may be found and easily implemented. In other cases, however, it may prove extremely difficult to find even one such variable and to implement it if one is located.

Lavenberg et al. [LAVE78] explored some controls for closed queueing networks. These networks have a finite number S of interconnected service centers

each having a single or multiple server queue. There are a finite number of customers N which circulate among the centers. While multiple customer types were considered, for simplicity we will only examine the single-type case. This still leaves a broad class of networks since there are no restrictions placed upon the service time distribution, the queueing discipline, or the queue capacity at each station. Some assumptions are made:

1. The sequence of entries to the service centers forms an irreducible Markov chain with a state space contained in the set of service centers and a fixed transition probability matrix $\underset{\sim}{P} = [p_{ij}]$.
2. The sequence of service times at each center i is a sequence of iid non-negative random variables distributed as the random variable T_i.
3. The above sequences are mutually independent. From p_{ij}'s the long-run relative frequency π_i with which a customer visits center i may be calculated in the usual way:

$$\underset{\sim}{\pi}\underset{\sim}{P} = \underset{\sim}{\pi} \text{ and } \Sigma_i \pi_i = 1 . \qquad (2.100)$$

Lavenberg et al. defined an event to be the departure of a customer from a service center, and the

customer's service time is associated with that event. Let

$e_i(M)$ = number of events associated with service center i in the first M events.

and

$W_i(M)$ = sum of the service times for the events included above.

Using these, Lavenberg et al. developed the following control variables:

1. $W_i(M)/e_i(M)$, a <u>service time variable</u> which represents the sample average service time observed at center i;
2. $e_i(M)/M$, a <u>flow variable</u> which represents the portion of events occurring at center i; and
3. $W_i(M)/M$, a <u>work variable</u> which represents the ratio of completed work at station i to the number of events.

Lavenberg et al. proved that

$$\lim_{M\to\infty} E[W_i(M)/e_i(M)] = E[T_i] \ , \tag{2.101}$$

$$\lim_{M\to\infty} E[e_i(M)/M] = \pi_i \ , \tag{2.102}$$

and

$$\lim_{M\to\infty} E[W_i(M)/M] = \pi_i E[T_i] \ . \qquad (2.103)$$

The following response characteristics were examined:

wt_s = average waiting time at station s, $1 \leq s \leq S$,

λ = steady-state service completion rate, and

rt = average time for a customer departing a given station to return to that station.

After applying the control variables to estimate the above performance measures, Lavenberg et al. found that the work variables produced larger variance reductions than the service time or flow variables individually or together. Using all of the work variables defined on the network, they were able to obtain confidence interval coverage comparable to the uncontrolled estimates based on the Student-t statistic. Comparing the results obtained from multinormal regression theory with the results based on jackknifing regression, they found that the intervals produced by the first method were significantly narrower and required much less computation to obtain. They further point out that work variables give

a substantial variance reduction provided that the loss factor $(K - 2)/(K - Q - 2)$ discussed in § 2.2.2 is not too large.

Lavenberg et al. [LAVE79] studied multiple control variables applied to regenerative simulation, with emphasis on obtaining valid confidence intervals. The GI/G/1 queue and several central-server models were studied. Under uncontrolled regenerative simulation, a steady-state system parameter r is expressed as a ratio of expected values

$$r = E[Y]/E[\alpha] \ , \tag{2.104}$$

where Y and α are appropriate random variables accumulated over a single regenerative cycle. (This is the standard regenerative notation established in section 2.1.) The system is simulated for a prespecified number of cycles or for a given amount of simulated time, and the pairs $\{(Y_i,\alpha_i)\}$ are collected. Frequently several long-run average system parameters $c^{(k)}$, $1 \leq k \leq K$, have known values and can be expressed as

$$c^{(k)} = E[Y^{(k)}]/E[\alpha^{(k)}] \ , \tag{2.105}$$

where $\alpha^{(k)}$ and $Y^{(k)}$ are auxiliary variables defined with respect to a single tour. Let

$$\bar{\alpha} = (1/n) \sum_{i=1}^{n} \alpha_i \ , \tag{2.106}$$

$$\bar{Y} = (1/n) \sum_{i=1}^{n} Y_i \ , \tag{2.107}$$

$$\hat{r} = \bar{Y}/\bar{\alpha} \ , \tag{2.108}$$

$$Z_i^{(k)} = Y_i^{(k)} - c^{(k)}\alpha_i^{(k)} \ , \tag{2.109}$$

$$\bar{Z}^{(k)} = (1/n) \sum_{i=1}^{n} Z_i^{(k)} \ , \tag{2.110}$$

and $$\hat{r}(\underset{\sim}{a}) = \hat{r} + \sum_{k=1}^{K} a_k \bar{Z}^{(k)}/\bar{\alpha} \ , \tag{2.111}$$

where $\underset{\sim}{a} = (a_1, \ldots, a_K)$. Thus r is the standard regenerative ratio estimator of $\hat{r}$, $\hat{r}(\underset{\sim}{a})$ is the top-controlled ratio estimator, and $\{Z^{(k)}/\bar{\alpha}\}$ are the control variables. Lavenberg et al. established that $\hat{r}(\underset{\sim}{a})$ is strongly consistent. Let

$$\sigma^2(\underset{\sim}{a}) = \mathrm{Var}[Y - r\alpha + \sum_{k=1}^{K} a_k Z^{(k)}] \ , \tag{2.112}$$

and

$$S^2(\underset{\sim}{a}) = [1/(n-1)] \sum_{i=1}^{n} [Y_i - \hat{r}\alpha_i$$

$$+ \sum_{k=1}^{K} a_k(Z_i(k) - \overline{Z}(k))]^2. \qquad (2.113)$$

Lavenberg et al. state that

$$\lim_{n\to\infty} S^2(\underset{\sim}{a}) = \sigma^2(\underset{\sim}{a}) \text{ with probability 1} \qquad (2.114)$$

and that

$$\lim_{n\to\infty} \Pr\{\sqrt{n}\,\overline{\alpha}(\hat{r}(a) - r)/S(a) \leq z\} = \phi(z) \ . \qquad (2.115)$$

From this, a confidence interval may be constructed for r.

For the GI/G/1 queue, the response variable studied was the steady-state mean time in system, μ_D. Let

$\alpha = \alpha(1) = \alpha(2)$ = number of customers served in a tour,

Y = total time in system for all customers served in a tour,

$Y(1)$ = duration of a tour, and

$Y(2)$ = duration of a busy period.

If the arrival rate is λ and the service rate is μ, then

$$E[Y^{(1)}] = E[\alpha]/\lambda \tag{2.116}$$

and

$$E[Y^{(2)}] = E[\alpha]/\mu \ . \tag{2.117}$$

The control variables selected were

$$\begin{aligned} \overline{Z}(k)/\overline{\alpha} &= [\overline{Y}(k) - c^{(k)}\overline{\alpha}(k)]/\overline{\alpha}(k) \\ &= (\overline{Y}(k)/\overline{\alpha}) - c^{(k)}, \ k = 1, 2 \ , \end{aligned} \tag{2.118}$$

where $c^{(1)} = 1/\lambda$ and $c^{(2)} = 1/\mu$.

Lavenberg et al. used the controls with the estimated optimal control coefficient $\hat{\underset{\sim}{a}}_o$ determined by two methods. In the first, or dependent, method $\underset{\sim}{a}_o$ is estimated from the first m of the n ($m \leq n$) tours used to construct the confidence interval for r. In the second, or independent, method $\underset{\sim}{a}_o$ is estimated from m tours that are statistically independent of the n tours. Independent estimation of $\underset{\sim}{a}_o$ produced smaller variance reductions than were obtained with dependent estimation of $\underset{\sim}{a}_o$. Confidence interval coverage was maintained at nominal levels with independent estimation but was significantly less with dependent estimation.

Iglehart and Lewis [IGLE79] also proposed a series of control variables for regenerative simulation. They concentrated their efforts on the estimation of the steady-state mean waiting time μ_W in the GI/G/1 queue. Iglehart and Lewis looked for controls which are highly correlated with $Y_1 - r\alpha_1$ and have the form $C_1 = D_1 - \alpha_1/\mu$, where μ is the service rate. D_1 is an attempt to mimic Y_1. Using the recursive relationship (21) relating successive waiting times, they suggested the following alternatives for D_1:

$$D_1^{(1)} = \begin{cases} W_0 = 0 \ , \ \alpha_1 = 1 \\ W_0 + W_1 \ , \ \alpha_1 \geq 2 \end{cases} ; \tag{2.119}$$

$$D_1^{(2)} = \begin{cases} W_0 = 0 \ , \ \alpha_1 = 1 \\ W_0 + W_1 \ , \ \alpha_1 = 2 \\ W_0 + W_1 + X_2^+ \ , \alpha_1 \geq 3 \end{cases} ; \tag{2.120}$$

$$D_1^{(3)} = W_2 \ ; \tag{2.121}$$

and

$$D_1^{(4)} = \begin{cases} W_0 = 0 \ , \ \alpha_1 = 1 \\ W_0 + W_1 \ , \alpha_1 = 2 \\ W_0 + W_1 + W_2 \ , \ \alpha_1 \geq 3 \end{cases} . \tag{2.122}$$

Thus, the controls are $C_1^{(i)} = D_1^{(i)} - \alpha_1/\mu$, i = 1, 2, 3, 4. Iglehart and Lewis point out that it is more difficult to calculate $E[D_1^{(i)}]$ as i increases, but that $D_1^{(i)}$ more closely mimics Y_1 as i increases.

In testing their controls for an M/M/1 queue, they found that $C_1^{(2)}$, and $C_1^{(3)}$, and $C_1^{(4)}$ performed much better than $C_1^{(1)}$; but that $C_1^{(3)}$ and $C_1^{(4)}$ gave little improvement over the much simpler $C_1^{(2)}$. Therefore, they selected $C_1^{(2)}$ as the most desirable control. Using $C_1^{(2)}$, they were able to obtain an average 50% variance reduction in the estimation of mean waiting time over a wide range of traffic intensities.

Wilson [WILS79] also investigated potential control variables for regenerative simulation. The networks he considered were assumed to possess finite expected cycle lengths and finite expected customer counts at each station for each cycle. The input process for each station i $\{X_k(i) : k \geq 1\}$ (i.e., observed interarrival times or service times) is assumed to have a known distribution F_i with mean μ_i and variance σ_i^2. Let

$g(i,t)$ = number of service times that are sampled at station i in the time period $[0,t]$,

$n(i,t)$ = number of service times that are completed at station i in the time period $[0,t]$,

and

$$n^*(t) = \sum_i n(i,t).$$

For each station i, Wilson proposed three "standardized" control variables. The first of these is given by

$$C_i^{(1)}(t) = [g(i,t)]^{-1/2} \sum_{k=1}^{g(i,t)} (X_k(i) - \mu_i)/\sigma_i \,. \tag{2.123}$$

Wilson was able to show that

$$C_i^{(1)}(t) \xrightarrow[t\to\infty]{\mathcal{L}} N(0,1) \tag{2.124}$$

at each station i. His second control is a standardized work variable for Lavenberg's closed networks:

$$C_i^{(2)}(t) = \{[n(i,t)]^{1/2}/[n^*(t)\pi_i]\} \cdot \sum_{k=1}^{n(i,t)} (X_k(i) - \mu_i)/\sigma_i \,, \tag{2.125}$$

where π_i is the long-run relative frequency with which a customer visits station i. For such a closed network,

$$C_i^{(2)}(t) \xrightarrow[t\to\infty]{\mathcal{L}} N(0,1) \tag{2.126}$$

at each station i. $C_i^{(2)}$ takes into account information about network traffic flow as well as the input processes. For networks in which some subset K_j of the stations operate independently of one another, Wilson suggested a weighted sum of control variables:

$$C_j^{(3)}(t) = \sum_{i\varepsilon K_j} w_{ji} C_i^{(1)}(t) \ , \tag{2.127}$$

where the weights w_{ji} are arbitrarily selected by the simulator. This control variable may be useful in reducing the total number of control coefficients which need to be estimated for large networks. It can be shown that

$$C_j^{(3)}(t) \xrightarrow[t\to\infty]{\mathcal{L}} N(0, \sum_{i\varepsilon K_j} w_{ji}^2) \ . \tag{2.128}$$

The asymptotic stability of these standardized work variables allow the simulator to apply either poststratified sampling techniques or control variate analysis in conjunction with regenerative or replication analysis.

Wilson was able to obtain variance reductions ranging from 30% to 90% in a variety of networks when

these standardized control variables were applied to the numerator of classical regenerative ratio estimators. At the same time, however, he encountered significant estimator bias and underestimation of the variance resulting in loss of confidence interval coverage. These difficulties are present in controlled regenerative analysis regardless of the controls selected. Wilson found that batching the cycles resulted in improved coverage while still giving large variance reductions. In addition, he provided a procedure to determine a sampling size large enough to guarantee adequate coverage.

CHAPTER III

PROCEDURES FOR IMPROVING BIAS AND CONFIDENCE INTERVAL COVERAGE PROBLEMS IN CONTROLLED REGENERATIVE ANALYSIS

This chapter presents an analysis of the problems encountered using control variables in the numerator of regenerative-type ratio estimators. Two types of control variables appear in the literature [LAVE79]: (i) a variable which is an estimator of a known quantity defined with respect to a second stochastic system where the known quantity is an approximation to the response variable of interest; (ii) a variable that is an estimator of a known quantity which is defined by known parameters of the system being directly simulated. We have restricted our research to the second, or concomitant, control variables. A class of controls is selected and a technique is developed that improves the performance of those control variables.

In addition, this chapter includes a theoretical development for a multivariate test for normality. Tests which have been proposed in other research are discussed to indicate the motivation for developing another technique.

3.1 Concomitant Control Variates

3.1.1 Selection of Controls

A wide variety of control variables have been proposed in past research. In choosing a class of control variables, it is necessary to establish some criteria for comparison. In using any variance reduction technique, ease of implementation is highly important. Methods requiring less computation for the machine and/or the simulator are preferable. It is also desirable to find controls which are effective for a variety of experimental systems. For these reasons, only concomitant (or internal) control variables were considered for use in this research. Lavenberg et al. [LAVE78] offered an effective set of controls for closed queueing systems with the work variables they proposed. While these controls are easily implemented, they are asymptotically unstable and they cannot be extended to open or mixed systems [WILS79].

Lavenberg et al. [LAVE79] examined multiple control variables applied to the numerator of a regenerative ratio estimator. These controls were applicable to both open and closed systems. These variables yielded substantial variance reductions in the models to which they were applied. However, their controls

produced a significant degradation in confidence interval coverage.

Iglehart and Lewis [IGLE79] proposed another class of controls which uses a recursive relationship for successive waiting times that is only applicable to the GI/G/s queue. While their controls are effective, derivation of the expected values of these variables presents a formidable task.

Wilson [WILS79] offered yet another type of concomitant control variable. The only restrictions he levied on the type of systems to be considered were that they possess finite expected cycle length and finite expected visit counts per cycle at each station. His controls performed effectively, but he did encounter some loss of confidence interval coverage. This loss was not, in general, as large as that experienced by Lavenberg et al. [LAVE79] under their complete dependent estimation scheme.

With this collection of choices of concomitant control variables, we selected Wilson's "standardized service-time variates" to use in our research. While these controls produced large efficiency increases when applied to the numerator of a regenerative ratio estimator, they did not perform as well when applied to the

denominator of such ratios. For this reason, we propose the use of a "standardized flow variate" to control the denominator. For example, if customers move from station 1 to station 2 with probability p_{12}, or elsewhere with probability $q_{12} = 1 - p_{12}$, then each branching operation may be regarded as a Bernoulli trial with mean p_{12} and variance $p_{12}q_{12}$ (here station 2 is regarded as a "success".)

Define

$h(j,t) \equiv$ number of customers which arrive at branch j in the simulated time period $[0,t]$ (3.1)

$I_k(j) \equiv$ the indicator function for a "success" at branch j for customer k (3.2)

$p_j \equiv$ probability of a "success" at branch j (3.3)

$q_j \equiv 1 - p_j$ (3.4)

Thus, $I_k(j)$ has mean $\mu_j = p_j$ and variance $\sigma_j^2 = p_j q_j$. The "standardized flow variate" is defined to be

$$D_j(t) = \{h(j,t)\}^{-1/2} \sum_{k=1}^{h(j,t)} \{I_k(j) - \mu_j\} / \sigma_j \quad (3.5)$$

This variable is of the same form as Wilson's "standardized service-time variate"

$$C_j(t) = \{g(j,t)\}^{-1/2} \sum_{k=1}^{g(j,t)} \{Y_k(j) - \mu_j\} / \sigma_j \quad (3.6)$$

which was defined in Chapter 2.

3.1.2 Theoretical Development of the Joint Distribution of Standaradized Variables

Suppose we have a regenerative system with QC stations and QD branching points. Thus, we may construct QC controls of the form (3.6) and QD controls of the form (3.5).

Let

$$Q = QC + QD \quad (3.7)$$

$$a(j,t) = \begin{cases} g(j,t) \ , \ 1 \leq j \leq QC \\ h(j - QC,t) \ , \ QC + 1 \leq j \leq QC + QD \end{cases} \quad (3.8)$$

$$U_k(j) = \begin{cases} Y_k(j) \ , \ 1 \leq j \leq QC \\ I_k(j - QC) \ , \ QC + 1 \leq j \leq QC + QD \end{cases} \quad (3.9)$$

Thus the jth standardized control may be expressed as

$$A_j(t) = \{a(j,t)\}^{-1/2} \sum_{k=1}^{a(j,t)} \{U_k(j) - \mu_j\} / \sigma_j \quad (3.10)$$

and the Q-dimensional control vector is

$$\underset{\sim}{A}(t) = [C_1(t), \ldots, C_{QC}(t), D_1(t), \ldots, D_{QD}(t)]^T$$

$$= [A_1(t), \ldots, A_Q(t)]^T . \qquad (3.11)$$

We wish to show that $\underset{\sim}{A}(t)$ converges in distribution to a multinormal distribution

$$\underset{\sim}{A}(t) \rightarrow N_Q(\underset{\sim}{0}, \underset{\sim}{\Sigma}) \qquad (3.12)$$

with null mean vector and a correlation-type covariance matrix $\underset{\sim}{\Sigma}$. Relation (3.12) will provide a theoretical foundation for applying multinormal regression theory to the study of controlled ratio estimators.

We begin with the observation that [RAO73]

$$\underset{\sim}{Z} \sim N_Q(\underset{\sim}{\mu}_z, \underset{\sim}{\Sigma}_z)$$

$$\Leftrightarrow \underset{\sim}{b}^T\underset{\sim}{Z} \sim N(\underset{\sim}{b}^T\mu_z, \underset{\sim}{b}^T \underset{\sim}{\Sigma}_z\underset{\sim}{b}) \text{ for all } \underset{\sim}{b} \in R^Q . \qquad (3.13)$$

We have assumed that our regenerative queueing system has a finite non-zero asymptotic sampling rate

$$\alpha_j \equiv \lim_{t\rightarrow\infty} a(j,t)/t \quad \text{a.s.} \qquad (3.14)$$

for the process associated with control j, $1 \leq j \leq Q$.

Define the partial sums

$$S_n(j) \equiv \sum_{k=1}^{n} \{U_k(j) - \mu_j\} / \sigma_j \ , \ 1 \leq j \leq Q \quad (3.15)$$

and let

$$[\ \alpha_j t] \equiv \text{greatest integer in } \alpha_j t, \ 1 \leq j \leq Q \ . \quad (3.16)$$

(The use of brackets to denote the greatest integer function is limited to this section only.) Note that for any t, the variates $\{S_{[\alpha_j t]}(j) : 1 \leq j \leq Q\}$ are mutually independent and

$$Z_j(t) \equiv S_{[\ \alpha_j t]}(j)/[\ \alpha_j t]^{1/2} \xrightarrow{\mathcal{L}} N(0, 1) \quad (3.17)$$

by the central limit theorem. Let

$$\underset{\sim}{Z}(t) = [Z_1(t), \ldots, Z_Q(t)]^T \ . \quad (3.18)$$

Define the characteristic functions

$$\phi_{kt}(u) \equiv E[\exp\{\ iuZ_k(t)\}\ ] \quad (3.19)$$

(Note that in this section only, we reserve the symbol i to denote $\sqrt{-1}$.) For a fixed $\underset{\sim}{b}$ in R^Q we have

$$\phi_t(u) = E[\exp\{iu\underset{\sim}{b}^T\underset{\sim}{Z}(t)\}]$$

$$= \prod_{k=1}^{Q} \phi_{kt}(ub_k) \tag{3.20}$$

since the $\{Z_k(t)\}$ variates are independent. In view of (3.17), the continuity theorem for characteristic functions [NEUT73] implies that

$$\lim_{t\to\infty} \phi_{kt}(u) = \exp\{-u^2/2\} \quad \text{for all } u\,. \tag{3.21}$$

Combining (3.20) and (3.21), we have

$$\lim_{t\to\infty} \phi_t(u) = \exp\{(-u^2/2)\sum_{k=1}^{Q} b_k^2\} \tag{3.22}$$

which is the characteristic function for a normal variate with mean zero and variance $\sum_{k=1}^{Q} b_k^2$. Again invoking the continuity theorem, we have

$$\underset{\sim}{b}^T\underset{\sim}{Z}(t) \to \underset{\sim}{b}^T\underset{\sim}{Z} \text{ for all } \underset{\sim}{b} \in R^Q;\ \underset{\sim}{Z} \sim N_Q(\underset{\sim}{0}, \underset{\sim}{I}_Q) \tag{3.23}$$

where $\underset{\sim}{I}_Q$ is the Q x Q identity matrix. To prove (3.12), consider the <u>dissection formula</u> for $A_j(t)$

$$\frac{S_{a(j,t)}}{\{a(j,t)\}^{1/2}} = \frac{S_{[\alpha_j t]}}{[\alpha_j t]^{1/2}} + \left\{\left(\frac{[\alpha_j t]}{a(j,t)}\right)^{1/2} - 1\right\} \cdot \frac{S_{[\alpha_j t]}}{[\alpha_j t]^{1/2}}$$

$$+ \left\{\frac{S_{a(j,t)} - S_{[\alpha_j t]}}{[\alpha_j t]^{1/2}}\right\} \cdot \left\{\frac{[\alpha_j t]}{a(j,t)}\right\}^{1/2} \qquad (3.24)$$

Note that

$$\lim_{t\to\infty} \{[\alpha_j t]/a(j,t)\} = 1 \quad , 1 \le j \le Q \ . \qquad (3.25)$$

In view of (3.17) we have

$$W_j(t) \equiv \left\{\left(\frac{[\alpha_j t]}{a(j,t)}\right)^{1/2} - 1\right\} \cdot \frac{S_{[\alpha_j t]}}{[\alpha_j t]^{1/2}} \xrightarrow{P} 0 \qquad (3.26)$$

by Slutsky's theorem [BICK77]. Wilson[WILS79] proved that

$$V_j(t) \equiv \left\{\frac{S_{a(j,t)} - S_{[\alpha_j t]}}{[\alpha_j t]^{1/2}}\right\} \cdot \left\{\frac{[\alpha_j t]}{a(j,t)}\right\}^{1/2} \xrightarrow{P} 0 \qquad (3.27)$$

If we define the random vectors

$$\underset{\sim}{W}(t) = [W_1(t), \ldots, W_Q(t)]^T$$

$$\underset{\sim}{V}(t) = [V_1(t), \ldots, V_Q(t)]^T$$

then relations (3.26) and (3.27) together with Slutsky's theorem imply

$$\underset{\sim}{b}^T\underset{\sim}{W}(t) \xrightarrow{P} 0 \ , \ \underset{\sim}{b}^T\underset{\sim}{V}(t) \xrightarrow{P} 0 \text{ for all } \underset{\sim}{b} \in R^Q. \qquad (3.28)$$

Now the dissection formula (3.24) may be expressed as

$$\underset{\sim}{A}(t) = \underset{\sim}{Z}(t) + \underset{\sim}{W}(t) + \underset{\sim}{V}(t);$$

and combining this with (3.23) and (3.28), we have

$$\underset{\sim}{b}^T\underset{\sim}{A}(t) \to \underset{\sim}{b}^T\underset{\sim}{Z} \quad \text{for all } \underset{\sim}{b} \in R_Q,\ \underset{\sim}{Z} \sim N_Q(\underset{\sim}{0}, \underset{\sim}{I}_Q). \quad (3.29)$$

Proposition 2c.4 (xi) of [RAO73] finally implies

$$\underset{\sim}{A}(t) \to N_Q(\underset{\sim}{0}, \underset{\sim}{I}_Q) \ .$$

3.2 An Examination of Bias and Confidence Interval Coverage

Previous research in the area of controlled regenerative analysis has shown that large variance reductions may be achieved through the use of concomitant control variables applied to the numerator of a ratio estimator. Serious problems have, however, been encountered in their use. A significant level of relative bias seems to be inherent in the top-controlled estimator [WILS79]. Additionally, it appears that the confidence intervals obtained frequently fail to provide proper coverage probabilities [LAVE79, WILS79].

3.2.1 Background.

We assume that the queueing system to be studied possesses the regenerative property, that the IID cycle lengths $\{\alpha_k, k \geq 1\}$ satisfy

$$0 < E[\alpha_k] < \infty \tag{3.30}$$

and that $X_k(i)$, the number of customers served at station i during cycle k, satisfies

$$0 < E[X_k(i)] < \infty \quad \text{for all } i. \tag{3.31}$$

These are relatively mild constraints upon the allowable queueing systems.

In top-controlled regeneration analysis, response variables Y and X and a vector of standardized control variables C with a known expectation of $\underset{\sim}{\mu}_C = \underset{\sim}{0}$ are collected for each of the n simulated tours. The regenerative ratio $r \equiv \mu_Y / \mu_X$ is then estimated by

$$\hat{r}(\underset{\sim}{\beta}) = (\overline{Y} - \underset{\sim}{\beta}^T \overline{\underset{\sim}{C}})/\overline{X} \tag{3.32}$$

where $\overline{Y}$, $\overline{X}$, and $\overline{C}$ are the sample means over the n cycles. An approximation to the variance of $\hat{r}(\underset{\sim}{\beta})$ for large samples is [IGLE79]

$$V[\hat{r}(\underset{\sim}{\beta})] = [1/(n\,\mu_X^2)] \cdot V[Y - rX - \underset{\sim}{\beta}^T \underset{\sim}{C}]. \tag{3.33}$$

The variance of $\hat{r}(\underset{\sim}{\beta})$ is minimized with the optimal control coefficient vector

$$\underset{\sim}{\beta}_o = \underset{\sim}{\Sigma}_C^{-1} \; \underset{\sim}{\sigma}(Y - rX, \underset{\sim}{C}) \; , \tag{3.34}$$

where $\underset{\sim}{\Sigma}_C$ is the covariance matrix of $\underset{\sim}{C}$ and $\underset{\sim}{\sigma}(Y - rX, \underset{\sim}{C})$ is the column vector

$$\underset{\sim}{\sigma}(Y - rX, C) = \begin{bmatrix} Cov(Y - rX, C_1) \\ \vdots \\ Cov(Y - rX, C_Q) \end{bmatrix} . \tag{3.35}$$

The optimal control coefficient $\underset{\sim}{\beta}_o$ is estimated by

$$\underset{\sim}{b} = \hat{\underset{\sim}{\Sigma}}_C^{-1} \; \hat{\underset{\sim}{\sigma}}(Y - \hat{r}_1 X, \underset{\sim}{C}) \tag{3.36}$$

using the corresponding sample covariances from the n observed cycles. The sample variance estimator for $\hat{r}(\underset{\sim}{b})$ is given by

$$\hat{V}[\hat{r}(\underset{\sim}{b})] = \{1/[n\cdot(n-1)\cdot\overline{X}^2]\} \cdot \sum_{j=1}^{n} [Y_j - \hat{r}_1 X_j - \underset{\sim}{b}^T(\underset{\sim}{C}_j - \overline{\underset{\sim}{C}})]^2 \tag{3.37}$$

where $\hat{r}_1 = \overline{Y}/\overline{X}$. Now $\hat{r}(\underset{\sim}{b})$ is asymptotically normal [LAVE79], and therefore a 100 (1 - α)% confidence interval for r is given by

$$\hat{r}(\underset{\sim}{b}) \pm z_{1-\alpha/2} \cdot \hat{V}[\hat{r}(\underset{\sim}{b})]^{1/2} \; . \tag{3.38}$$

3.2.2 Theoretical Examination of Bias in the Top-Controlled Estimator

In order to examine the bias present in $\hat{r}(\underset{\sim}{b})$, the top-controlled estimate of r, let us first discuss bias as related to the classical ratio estimator

$$\hat{r}_1 = \overline{Y}/\overline{X} \tag{3.39}$$

taken over the same n cycles. Let

$$r_1 \equiv E[\hat{r}_1] \ . \tag{3.40}$$

The covariance between $\hat{r}_1$ and $\overline{X}$ is given by

$$\begin{aligned} Cov(\hat{r}_1,\overline{X}) &= E[\hat{r}_1 \cdot \overline{X}] - E[\hat{r}_1] \cdot E[\overline{X}] \\ &= E[(\overline{Y}/\overline{X}) \cdot \overline{X}] - \hat{r}_1 \mu_x \\ &= \mu_y - r_1 \mu_x \ . \end{aligned} \tag{3.41}$$

This gives us the relation

$$\begin{aligned} (1/\mu_x) \cdot Cov(\hat{r}_1, \overline{X}) &= \mu_y/\mu_x - r_1 \\ &= r - r_1 \end{aligned} \tag{3.42}$$

Thus, the bias in $\hat{r}_1$ is given by

$$B(\hat{r}_1) \equiv r_1 - r = - Cov(\hat{r}_1, \overline{X})/\mu_x \ . \tag{3.43}$$

which is of the same form as (3.41). Through a similar argument we obtain

$$|B[\hat{r}(b)]| = \{|R_2| \cdot SE[\hat{r}(\underset{\sim}{b})] \cdot SE[\bar{X}]\} / \mu_{X'} \tag{3.51}$$

where R_2 is the coefficient of correlation for $\hat{r}(b)$ and X. This yields the bound

$$|B[\hat{r}(\underset{\sim}{b})]| / SE[\hat{r}(\underset{\sim}{b})] \leq CV(\bar{X}) . \tag{3.52}$$

3.2.3 A Technique for Controlling Bias

Research in the area of concomitant control variables has been confined to the application of controls to the numerator of a ratio. Equations (3.47) and (3.52) reveal that the relative bias present in the classical and top-controlled regenerative ratios primarily relates not to the numerator but rather the denominator of the ratio of interest. We have, therefore, chosen to turn our attention to the development of a strategy pertinent to the denominator which would improve the efficiency of a queueing simulation in the same manner as the top-controlled method without the bias penalty.

A logical path of exploration is to consider applying controls to the denominator. Let

$$\hat{r}(\underset{\sim}{\delta}) = \overline{Y}/(\overline{X} - \underset{\sim}{\delta}^T \overline{\underset{\sim}{D}}) \tag{3.53}$$

where $\overline{\underset{\sim}{D}}$ indicates the sample mean of a vector of standardized control variables $\underset{\sim}{D}$ with known expectation $\underset{\sim}{\mu}_D = \underset{\sim}{0}$. Applying the same argument used earlier we have

$$B[\hat{r}(\underset{\sim}{\delta})] = -\,\mathrm{Cov}[\hat{r}(\underset{\sim}{\delta}), \overline{X} - \underset{\sim}{\delta}^T \overline{D}] / \mu_X$$

$$= -\{R_3 \cdot SE[\hat{r}(\underset{\sim}{\delta})] \cdot SE[\overline{X} - \underset{\sim}{\delta}^T \overline{D}]\} / \mu_X \tag{3.54}$$

where R_3 is the coefficient of correlation between $\hat{r}(\underset{\sim}{\delta})$ and $\overline{X} - \underset{\sim}{\delta}^T \overline{\underset{\sim}{D}}$. Thus, a bound on the relative bias is given by

$$|B[\hat{r}(\underset{\sim}{\delta})]| / SE[\hat{r}(\underset{\sim}{\delta})]$$

$$\leq SE[X - \underset{\sim}{\delta}^T \underset{\sim}{D}]/(n^{1/2}\ \mu_X)\ . \tag{3.55}$$

As will be seen in Chapter V, the relative bias of a ratio estimator is a major cause of coverage degradation in the associated confidence interval estimator. (See also [COCH77], pp. 12-16.) This last expression implies that applying controls to the bottom of a ratio estimator should reduce bias if we are able to find controls which are strongly correlated with X. The optimal

control coefficient vector that minimizes the bound (3.55) on the relative bias of $\hat{r}(\underset{\sim}{\delta})$ is given by

$$\underset{\sim}{\delta}_o = \underset{\sim}{\Sigma}_D^{-1} \; \underset{\sim}{\sigma}(X, \underset{\sim}{D}) \; , \tag{3.56}$$

where $\underset{\sim}{\Sigma}_D$ denotes the covariance matrix of the random vector $\underset{\sim}{D}$ and $\underset{\sim}{\sigma}(X, \underset{\sim}{D})$ denotes the column vector of covariances between X and each component of $\underset{\sim}{D}$. This optimal control vector is estimated by

$$\underset{\sim}{d} = \hat{\underset{\sim}{\Sigma}}_D^{-1} \; \hat{\underset{\sim}{\sigma}}(X, D) \tag{3.57}$$

where the entries of $\hat{\underset{\sim}{\Sigma}}_D$ and $\hat{\underset{\sim}{\sigma}}(X, \underset{\sim}{D})$ are the corresponding sample covariances computed over all observed tours. In addition, care must be taken that application of those controls does not increase the correlation between the ratio estimator and its denominator.

3.2.4 A Two-Stage Procedure for Controlling Bias and Variance

In practice, application of controls to the denominator produced strong results in terms of bias correction. These controls did, however, simultaneously result in large variance increases. This led us to attempt a two-stage procedure. Since application of

controls to the numerator gives large variance reductions, we propose that the simulator should apply appropriate controls first in the denominator to reduce the bias of the regenerative estimator; then he should apply a different set of controls to the numerator of the bottom-controlled ratio to obtain a variance reduction.

The new ratio estimator offered by this research is

$$\hat{r}(\underset{\sim}{\beta},\underset{\sim}{\gamma}) = (\overline{Y} - \underset{\sim}{\beta}^T\overline{\underset{\sim}{C}})/(\overline{X} - \underset{\sim}{\gamma}^T\overline{\underset{\sim}{D}}) \tag{3.58}$$

where $\underset{\sim}{C}$ and $\underset{\sim}{D}$ are disjoint sets of standardized controls. The variance of this estimator is given by

$$V[\hat{r}(\underset{\sim}{\beta},\underset{\sim}{\gamma})] \cong V[Y - \underset{\sim}{\beta}^T\underset{\sim}{C} - r(X - \underset{\sim}{\gamma}^T\underset{\sim}{D})]/(n\ \mu_x^2). \tag{3.59}$$

We first wish to control the denominator to obtain a reduction in bias. This requires a minimization of $V(X - \underset{\sim}{\gamma}^T\underset{\sim}{D})$. The optimal control coefficient is therefore estimated by

$$\underset{\sim}{d} = \hat{\underset{\sim}{\Sigma}}_D^{-1}\ \hat{\underset{\sim}{\sigma}}(X, \underset{\sim}{D}) . \tag{3.60}$$

Let

$$X_i^* \equiv X_i - \underset{\sim}{d}^T \underset{\sim}{D}_i \ , \ 1 \leq i \leq n \ . \tag{3.61}$$

We may now express our ratio estimator as

$$\hat{r}(\underset{\sim}{\beta}, \underset{\sim}{d}) = (\overline{Y} - \underset{\sim}{\beta}^T \overline{\underset{\sim}{C}})/\overline{X}^* \tag{3.62}$$

which has approximate variance

$$V[\hat{r}(\underset{\sim}{\beta}, \underset{\sim}{d})] = V[(Y - \underset{\sim}{\beta}^T \underset{\sim}{C}) - rX^*]/n\ \mu_x^2). \tag{3.63}$$

The vector $\underset{\sim}{\beta}_o$ which minimizes (3.63) is estimated by

$$\underset{\sim}{b} = \hat{\underset{\sim}{\Sigma}}_C^{-1}\ \hat{\sigma}(Y - \hat{r}_1 X^*, \underset{\sim}{C}) \ . \tag{3.64}$$

The resulting sample variance is given by

$$V[\hat{r}(\underset{\sim}{b}, \underset{\sim}{d})] = \{ 1/[n \cdot (n - 1) \cdot (\overline{X} - \underset{\sim}{d}^T \overline{\underset{\sim}{D}})^2] \}$$

$$\cdot \sum_{j=1}^{n} \{Y_j - \underset{\sim}{b}^T(\underset{\sim}{C}_j - \overline{\underset{\sim}{C}}) - \hat{r}_1[X_j - \underset{\sim}{d}^T(\underset{\sim}{D}_j - \overline{\underset{\sim}{D}})]\}^2 \tag{3.65}$$

We form an approximate 100 $(1 - \alpha)$% confidence interval for r by

$$\hat{r}(\underset{\sim}{b}, \underset{\sim}{d}) \pm z_{1-\alpha/2} \cdot \{\hat{V}[\hat{r}(\underset{\sim}{b}, \underset{\sim}{d})]\}^{1/2} \ . \tag{3.66}$$

The relative bias structure of the two-stage controlled ratio estimator reveals much information as to the settings in which the procedure will be

beneficial. For the first time, an explicit expression for bias is given which will allow the simulator to determine after a short preliminary run whether or not the controls he selects will result in bias reduction.

The bias of our estimate is defined to be

$$B[\hat{r}(\underset{\sim}{b}, \underset{\sim}{d})] \equiv E[\hat{r}(\underset{\sim}{b}, \underset{\sim}{d})] - \mu_y / \mu_x$$

$$= - \mathrm{Cov}[\hat{r}(\underset{\sim}{b}, \underset{\sim}{d}), \overline{X} - \underset{\sim}{d}^T \overline{\underset{\sim}{D}}] / \mu_x . \quad (3.67)$$

Now,

$$\mathrm{Cov}[\hat{r}(\underset{\sim}{b}, \underset{\sim}{d}), \overline{X} - \underset{\sim}{d}^T \underset{\sim}{D}]$$

$$= R_4 \cdot SE[\hat{r}(\underset{\sim}{b}, \underset{\sim}{d})] \cdot SE[X^*] , \quad (3.68)$$

where R_4 is the coefficient of correlation between $\hat{r}(\underset{\sim}{b}, \underset{\sim}{d})$ and $\overline{X}^*$. Therefore, the measure of relative bias is

$$| B[\hat{r}(\underset{\sim}{b}, \underset{\sim}{d})] | / SE[\hat{r}(\underset{\sim}{b}, \underset{\sim}{d})]$$

$$= | R_4 | \cdot SE[X^*] / (n^{1/2} \mu_x) . \quad (3.69)$$

Using Lavenberg's [LAVE78] formula for loss of efficiency due to the estimation of the control coefficients over n regenerative cycles, we obtain

$$V[X^*] = V[X - \underset{\sim}{d}^T \underset{\sim}{D}]$$

$$= \sigma_x^2 \cdot (1 - R_5^2) \cdot [(n - 2)/(n - QD - 2)], \tag{3.70}$$

where we assume $\underset{\sim}{D}$ to be a QD dimensional vector and R_5 is the coefficient of multiple correlation between X and $\underset{\sim}{D}$. We therefore obtain the explicit expression for relative bias

$$|B[\hat{r}(\underset{\sim}{b}, \underset{\sim}{d})]| / SE[\hat{r}(\underset{\sim}{b}, \underset{\sim}{d})] =$$

$$\{\sigma_x \cdot |R_4| \cdot (1-R_5^2)^{1/2} \cdot [(n-2)/(n-QD-2)]^{1/2}\}/(n^{1/2}\mu_x) \tag{3.71}$$

This last expression gives several clues for selecting controls for the denominator. Due to the presence of the loss factor $(n - 2)/(n - QD - 2)$, keeping the number of bottom controls to a minimum is desirable. In addition, a strong correlation between X and $\underset{\sim}{D}$ is preferable, but it should be accompanied by a weak correlation between $\hat{r}(\underset{\sim}{b}, \underset{\sim}{d})$ and X^*.

To gain insight into the behavior of the variance of the two-stage estimator, we will now develop an explicit expression for that quantity. This expression will again give the simulator information about the value of his controls.

Let

$$Y_i^* = Y_i - \underset{\sim}{b}^T \underset{\sim}{C}_i, \; 1 \leq i \leq n \tag{3.72}$$

Now,

$$V[\hat{r}(\underset{\sim}{b}, \underset{\sim}{d})] = [1/(n\ \mu_x^2)] \cdot V[(Y - \underset{\sim}{b}^T \underset{\sim}{C}) - r(X - \underset{\sim}{d}^T \underset{\sim}{D})] \tag{3.73}$$

and, in terms of $Y^* \equiv Y - \underset{\sim}{b}^T \underset{\sim}{C}$ and $X^* \equiv X - \underset{\sim}{d}^T \underset{\sim}{D}$, we have:

$$\begin{aligned} V[(Y - \underset{\sim}{b}^T \underset{\sim}{C}) - r(X - \underset{\sim}{d}^T \underset{\sim}{D})] &= V[Y^* - rX^*] \\ &= V[Y^*] + r^2 V[X^*] - 2r\ \mathrm{Cov}(Y^*, X^*) \\ &= \sigma_y^2 (1 - R_6^2) L_T + r^2\ \sigma_x^2 (1 - R_5^2) L_B \\ &\quad - 2r[R_7 \cdot \sigma_y (1 - R_6^2)^{1/2} \cdot L_T^{1/2} \cdot \sigma_x \\ &\quad \cdot (1 - R_5^2)^{1/2} \cdot L_B^{1/2}] \end{aligned} \tag{3.74}$$

where R_6 and R_7 respectively denote the correlation coefficients between Y and $\underset{\sim}{C}$, and between Y^* and X^*. Moreover, we have the loss coefficients for the top and bottom of $\hat{r}(\underset{\sim}{b}, \underset{\sim}{d})$:

$$L_T = (n - 2)/(n - QC - 2)$$

and

$$L_B = (n - 2)/(n - QD - 2) .$$

Equation (3.74) reveals that there are several opportunities for variance reduction in the two-stage estimator. Strong correlations between Y and $\underset{\sim}{C}$ and X and $\underset{\sim}{D}$ will reduce the overall variance. In addition, a strong positive correlation between Y* and X* will result in variance reduction, but a variance increase will be realized if they are negatively correlated.

We will point out here that results in § 3.1 are the first quantification of the bias found in these controlled ratio estimators. Implications for the practitioner will be summarized in Chapter V.

3.3 Development of a Test for Multivariate Normality

The class of control variates selected for use in this research requires that they be from a multivariate normal distribution. This required the batching of observations over a number of cycles to induce a central-limit effect. In order to reduce the total number of simulated cycles required, we wished to use a

normality test which would indicate the minimum required batching size.

3.3.1 Analysis of Previously Proposed Tests

Hensler et al. [HENS77] developed a test for multivariate normality requiring successive orthogonal transformations of the observations. They base their test on the following theorem and corollary:

> <u>Theorem</u>. Let $\underset{\sim}{X}_1, \underset{\sim}{X}_2, \ldots, \underset{\sim}{X}_n$ be independent k-variate random variables with covariance matrix $\underset{\sim}{\Sigma}$. Let $\underset{\sim}{A} = (a_{ij})$, $i, j = 1, \ldots, n$, be an $n \times n$ orthogonal matrix over R^1 such that at least two elements in the first row are not zero. Denote $\underset{\sim}{X}_i^T = (X_{i1}, \ldots, X_{ik})$, $i = 1, \ldots, n$, $X = (X_{ij})$, $i = 1, \ldots, n$, $j = 1, \ldots, k$ and let
>
> $$\underset{\sim}{Y} = \underset{\sim}{A}\underset{\sim}{X}$$
>
> where $\underset{\sim}{Y}_i^T = (Y_{i1}, \ldots, Y_{ik})$, $i = 1, \ldots, n$. Then $\underset{\sim}{Y}_2, \underset{\sim}{Y}_3, \ldots, \underset{\sim}{Y}_n$ are $(n - 1)$ iid k-variate normal, $N(\underset{\sim}{0}, \underset{\sim}{\Sigma})$, random variables if and only if $\underset{\sim}{X}_1, \ldots, \underset{\sim}{X}_n$ are such that $\underset{\sim}{X}_j$ is k-variate normal, $N(a_{1j}E[\underset{\sim}{Y}_1], \underset{\sim}{\Sigma})$, $j = 1, \ldots, n$.
>
> <u>Collary</u>. Let $\underset{\sim}{X}_1, \ldots, \underset{\sim}{X}_n$ be a random sample from a k-variate distribution with mean vector

$\underset{\sim}{\mu}$ and covariance matrix $\underset{\sim}{\Sigma}$. Define an $(n - 1)$ by n matrix $\underset{\sim}{B} = (b_{ij})$ by

$$b_{ij} = \begin{cases} 1 - b, & i = j,\ i = 1, 2, \ldots, n - 1 \\ -b, & i \neq j,\ i, j = 1, 2, \ldots, n - 1 \\ -(1 + \sqrt{n})b, & i = 1, \ldots, n - 1;\ j = n \end{cases}$$

where $b = 1/[n + \sqrt{n}]$. Complete the matrix B to an n by n orthogonal matrix $\underset{\sim}{C}$. Define n random variables $\underset{\sim}{Y}_1, \ldots, \underset{\sim}{Y}_n$ by

$$\underset{\sim}{Y} = \underset{\sim}{C}\underset{\sim}{X}$$

where $\underset{\sim}{Y} = (Y_{ij})$ and $\underset{\sim}{X} = (X_{ij})$, $i = 1, \ldots, n$, $j = 1, \ldots, k$. Then $\underset{\sim}{Y}_1, \ldots, \underset{\sim}{Y}_{n-1}$ are iid $N(\underset{\sim}{0}, \underset{\sim}{\Sigma})$ if and only if $X_1, \ldots, X_n$ are iid $N(\underset{\sim}{\mu}, \underset{\sim}{\Sigma})$.

This corollary allows them to test for $N(\underset{\sim}{0}, \underset{\sim}{\Sigma})$ rather than testing for $N(\underset{\sim}{\mu}, \underset{\sim}{\Sigma})$.

To test for k-variate normality of a random sample of size n, the corollary must first be employed to reduce the problem to one of testing for a sample of size $n - 1$, $\underset{\sim}{Y}_i^T = (Y_{i1}, \ldots, Y_{ik})$, $i = 1, \ldots, n - 1$, from a $N(\underset{\sim}{0}, \underset{\sim}{\Sigma})$ distribution. Hensler et al. then

propose testing the last component $\underset{\sim}{X}_{(k)}^T = (X_{ik}, \ldots X_{n-1,k})$ for univariate normality with mean 0 and variance σ_{kk}^2. Next, they test the conditional (k - 1) variate normality of the first k - 1 components given the last. They form an orthogonal matrix A whose first row is

$$\frac{X_{1k}}{s} \quad \frac{X_{2k}}{s} \quad \ldots \quad \frac{X_{(n-1)k}}{s}$$

where

$$s^2 = \sum_{i=1}^{n-1} X_{ik}^2$$

Let

$$\underset{\sim}{W} = \underset{\sim}{A}\underset{\sim}{X} .$$

By their theorem, this reduces the problem to testing $\underset{\sim}{W}$ for (k - 1)-variate normality. The procedure is repeated testing the last component for univariate normality and forming a new orthogonal transformation.

This test presents several problems. First, it omits a great deal information. Univariate tests for normality are performed on k independent sample sizes of n - 1, n - 2, ..., n - k, so that [k(k + 1)/2] observations are lost. Second, the practicality of forming

several orthogonal transformations is questionable. Given large sample sizes, this could prove extremely expensive. Third, the choice of the test for univariate normality is left to the tester. Hensler et al. offer no information on the power of this test but merely state that it will do no better than the univariate test selected.

Cox and Small [COX78] proposed goodness of fit tests for multivariate normality based upon tests of linearity of regression. They proposed both coordinate-dependent and invariate approaches. Due to the theoretical power and value of invariant methods in multivariate analysis, we only present that particular test. The basic idea of their method is to find the pair of variables which are linear combinations of the original variables that will result in maximum curvature when one is regressed on the other. The amount of that curvature is taken as the test statistic.

Suppose $\underset{\sim}{Y} = (Y_1, \ldots, Y_v)^T$ is a standardized v-dimensional variate with mean $\underset{\sim}{0}$ and covariance matrix $\underset{\sim}{\Sigma}$. For the higher moments, write for r, s, t, u = 1, ..., v,

$$E[Y_r Y_s Y_t] = \underset{\sim}{\mu}(r,s,t), \quad E[Y_r Y_s Y_t Y_u] = \underset{\sim}{\mu}(r,s,t,u).$$

Two linear combinations $X = \underset{\sim}{a}^T \underset{\sim}{Y}$ and $W = \underset{\sim}{b}^T \underset{\sim}{Y}$ are formed with $\underset{\sim}{a}^T \underset{\sim}{\Sigma} \underset{\sim}{a} = \underset{\sim}{b}^T \underset{\sim}{\Sigma} \underset{\sim}{b} = 1$ so that X and W have mean zero and variance one.

Let $\gamma = \gamma_{XW}$ be the least squares regression coefficient of X on W^2, adjusting for the linear regression of X on W. Using the orthogonalized form

$$X = \beta W + \gamma [W^2 - WE[W^3] - 1] + \varepsilon ,$$

Cox and Small obtained the coefficient

$$\gamma_{XW} = \frac{E[X \cdot W^2] - E[W^3] \cdot E[X \cdot W]}{E[W^4] - 1 - (E[W^3])^2} .$$

A measure of quadratic contribution to the regression is

$$\eta_{XW} = \gamma_{XW} / \{E[W^4] - 1 - E^2[W^3]\}^{1/2} .$$

Note that η_{XW}^2 is the proportion of total variance of X accounted for by the quadratic component of the regression.

To find the maximum possible curvature, the numerator of γ_{XW} is maximized with respect to a fixed $\underset{\sim}{b}$. In terms of $\underset{\sim}{a}$ and $\underset{\sim}{b}$, this gives the non-linear problem of

AD-A119 740 AIR FORCE INST OF TECH WRIGHT-PATTERSON AFB OH F/G 12/1
REGENERATIVE SIMULATION USING INTERNAL CONTROLS.(U)
1982 J D EAKLE-CARDINAL
UNCLASSIFIED AFIT/CI/NR/82-53D NL

2 3

$$\text{maximize } \zeta = \sum a_r b_s b_t \, \mu(r, s, t)$$

$$- \left(\sum b_r b_s b_t \, \mu(r, s, t)\right) \cdot \left(\sum a_r b_s \, \sigma_{rs}\right)$$

subject to

$$\sum a_r a_s \, \sigma_{rs} = \sum b_r b_s \, \sigma_{rs} = 1.$$

Consider $\zeta - \frac{1}{2}\lambda \sum a_r a_s \sigma_{rs}$ where λ is a Lagrange multiplier, and differentiate with respect to a_u to give for $u = 1, \ldots, V$ at a stationary point,

$$\sum b_s b_t \, \mu(u, s, t)$$

$$- \left(\sum b_t \, \sigma_{ut}\right)\left(\sum b_r b_s b_t \, \mu(r, s, t)\right) - \lambda \sum a_t \, \sigma_{ut}$$

$$= 0 .$$

For the maximum value of ζ, ζ^*, they find that

$$a_u = \left[\sum b_r b_s \, \mu(r, s, t) \, \sigma^{tu}\right.$$

$$\left. - b_u \sum b_r b_s b_t \, \mu(r, s, t)\right] / \zeta^* ,$$

where σ^{ij} is the ij^{th} element of Σ^{-1}, and that η_o^2, the supremum of η_{XW} over a for fixed b is

$$\eta_o^2 = \frac{\sum b_r b_s b_t b_u \, \mu(r,s,p) \, \mu(t,u,q) \sigma^{pq} - \left[\sum b_r b_s b_t \, \mu(r,s,t)\right]^2}{\sum b_r b_s b_t b_u \, \mu(r,s,t,u) - 1 - \left[\sum b_r b_s b_t \, \mu(r,s,t)\right]^2}$$

This last expression must be maximized using the sample values of the higher moments. The authors suggest that, after locating an initial value $\underset{\sim}{b}_o$, a "hill-climbing" algorithm be applied. The value of log η_o^2 is used as a test statistic. This statistic is tested for normality.

The test proposed by Cox and Small raises several questions. Evaluating η_o^2 requires the solution of a highly non-linear expression. They point out the potential for reaching a local rather than global maximum. They state that the effort involved in evaluating η_o^2 is of order v^4. This significantly reduces the size of the matrix $\underset{\sim}{Y}$ which may be considered. Another problem for the user is that an inspection of scatter diagrams for the derived variables is required. This means that after η_o^2 is derived, the practitioner must still make a value judgement. No indications of the power of this test are offered.

Small [SMAL80] suggested testing the skewness and kurtosis of the marginal distributions of a multivariate distribution. Suppose the random variable to be tested is p-dimensional and that a random sample of size n has been taken for this variate. Let $\underset{\sim}{X}_1$ be the vector of sample marginal coefficients of skewness with

covariance matrix $\underset{\sim}{V}_1$, and $\underset{\sim}{X}_2$ be the vector of sample marginal coefficients of kurtosis with covariance matrix $\underset{\sim}{V}_2$, Small then applies Johnson's S_u transformation [JOHN49] component-wise to these marginal sample statistics to obtain the vectors

$$\underset{\sim}{y}_1 = \underset{\sim}{\delta}_1 \sinh^{-1}(\underset{\sim}{X}_1/\lambda)$$

and

$$\underset{\sim}{y}_2 = \gamma_2 \underset{\sim}{1} + \delta_2 \sinh^{-1}[(\underset{\sim}{X}_2 - \zeta \underset{\sim}{1})/\lambda_2] ,$$

where δ_1, δ_2, γ_2, and ζ are found using the first four moments of $\underset{\sim}{X}_1$ and $\underset{\sim}{X}_2$ and tables given by Johnson [JOHN65]. The components of $\underset{\sim}{y}_1$ and $\underset{\sim}{y}_2$ have distributions that are approximately standard normal, so that their covariance matrices $\underset{\sim}{U}_1$ and $\underset{\sim}{U}_2$ have main diagonal elements of unity. If the theoretical correlation between the ith and jth variates of the original data is ρ_{ij}, the off-diagonal elements of $\underset{\sim}{U}_1$ and $\underset{\sim}{U}_2$ are given by ρ_{ij}^3 and ρ_{ij}^4, respectively. The test statistics

$$Q_1 = \underset{\sim}{y}_1^T \underset{\sim}{U}_1^{-1} \underset{\sim}{y}_1 \text{ and } Q_2 = \underset{\sim}{y}_2^T \underset{\sim}{U}_2^{-1} \underset{\sim}{y}_2$$

each have an approximate χ^2_p distribution under the null hypothesis. Since the skewness and kurtosis coefficients are uncorrelated and nearly independent in the

univariate case, Q_1 and Q_2 are nearly independent and the significance level for the tests may be determined accordingly. Of course when the correlation's $\{\rho ij\}$ are unknown, they must be estimated from the sample data.

Small's test offers an ease of calculation not seen in earlier tests. However, it is based upon the necessary, though not sufficient, condition that the marginal distributions must be univariate normal for a multivariate distribution to be normal. He states that is is possible for a marked departure from multivariate normality to be accompanied by apparent normality in the marginals. Results of this test are therefore inconclusive.

Hawkins [HAWK81] proposed simultaneously testing for multivariate normality and homoscedasticity. He employed the Anderson-Darling statistic to test for these properties.

Let $\underset{\sim}{X}_{ij}$, $i = 1, \ldots, g$, $j = 1, \ldots, n_i$ be a vector of p components. Hawkins proposed to test for

$$\underset{\sim}{X}_{ij} \sim N_p(\underset{\sim}{\xi}_i, \underset{\sim}{\Sigma}_i)$$

where N_p indicates a p-variate normal. Let $\underset{\sim}{\bar{X}}_{i.}$ and $\underset{\sim}{S}_i$ respectively denote the sample mean vector and variance matrix of the sample $\{\underset{\sim}{X}_{ij}: 1 \leq j \leq n_i\}$. Let

$$N = \sum_{i=1}^{g} n_i$$

and

$$\underset{\sim}{S} = \sum_{i=1}^{g} (n_i - 1)\underset{\sim}{S}_i/(N - g) .$$

Define

$$V_{ij} = (\underset{\sim}{X}_{ij} - \overline{\underset{\sim}{X}}_{i.})^T \underset{\sim}{S}^{-1}(\underset{\sim}{X}_{ij} - \overline{\underset{\sim}{X}}_{i.}) .$$

If $\overline{\underset{\sim}{X}}_{i.}^*$ and S^* respectively denote the sample mean vector for group i and the pooled covariance matrix obtained by deleting X_{ij} from the sample, Hawkins shows that

$$T^2 = (n_i - 1)(\underset{\sim}{X}_{ij} - \overline{\underset{\sim}{X}}_{i.}^*)^T \underset{\sim}{S}^{*-1}(\underset{\sim}{X}_{ij} - \overline{\underset{\sim}{X}}_{i.}^*)/n_i$$

follows a Hotellings T^2 distribution and therefore

$$F_{ij} = (N - g - p)T^2/[p(N - g - 1)]$$

has an F distribution with p and N - g - p degrees of freedom. Invoking the binomial inversion theorem [PRES72], Hawkins indicates that

$$F_{ij} = [(N-g-p)n_iV_{ij}]/ \{p[(n_i-1)(N-g) - n_iV_{ij}]\} .$$

The statistic

$$A_{ij} = P\{F > F_{ij}\}$$

is distributed as a uniform (0, 1) variate under the null hypothesis. The following are the proposed test statistics. For all i, let $A_{i(1)} \leq A_{i(2)} \leq \cdots \leq A_{i(n_i)}$ be the order statistics for the A_{ij}. The Anderson-Darling test statistic is

$$W_i = n_i - n_i^{-1} \sum_{j=1}^{n_i} (2j - 1)[\log A_{i(j)} + \log(1 - A_{i(n_i - j + 1)})] .$$

The Wi's may asymptotically be expressed as

$$W_i = \sum_{k=1}^{\infty} Z_{ik}^2/[k(k + 1)]$$

where $Z_{ik} = - [(2k + 1)n]^{1/2} \sum_{j=1}^{n_i} P_k \{2A_{i(j)} - 1\}$

and P_k is a kth order orthogonal polynomial. To test for nonnormality, the W_i and first few Z_{ij} must be computed. Nonnormality is indicated if the Z_{ij}'s are near zero and the W_i's are large.

Hawkin's test is, unfortunately, a qualitative, rather than quantitative one. There are no tabulated critical values for his test statistic.

Computationally, obtaining the W_i's and Z_{ij}'s is a forbidding task. In addition, it remains unclear as to how many of the Z_{ij}'s must be computed and examined.

3.3.2 Motivation for the Proposed Test

Shapiro and Wilk [SHAP65] concentrated their efforts on developing a test for univariate normality which would be both scale and origin invariant. Their work was based upon an attempt to formalize the departures from statistical linearity of probability plots. Let $x_1 \leq x_2 \leq \cdots \leq x_n$ denote the order statistics for random sample of size n from a standard normal distribution with

$$E[x_i] = m_i$$

and

$$\mathrm{Cov}(x_i, x_j) = v_{ij} .$$

If $\underset{\sim}{y}^T = (y_1, \ldots, y_n)$ is a vector of order statistics for a random sample of size n from a fixed but unknown distribution, then we wish to test whether this distribution is normal. If the underlying population is normal, then we may write

$$y_i = \mu + \sigma x_i, \; 1 \leq i \leq n .$$

Let $\underset{\sim}{m}^T = (m_1, \ldots, m_n)$ and $\underset{\sim}{V} = (v_{ij})$. For symmetric distributions, the unbiased least-squares estimates for μ and σ are

$$\hat{\mu} = [1/n] \sum_{i=1}^{n} y_i$$

and

$$\hat{\sigma} = [\underset{\sim}{m}^T \underset{\sim}{V}^{-1} \underset{\sim}{y}] / [\underset{\sim}{m}^T \underset{\sim}{V}^{-1} \underset{\sim}{m}] .$$

The Shapiro-Wilk test statistic is

$$W = [\sum_{i=1}^{n} a_i y_i]^2 / \sum_{i=1}^{n} (y_i - \bar{y})^2$$

where

$$\underset{\sim}{a}^T = [\underset{\sim}{m}^T \underset{\sim}{V}^{-1}] / [\underset{\sim}{m}^T \underset{\sim}{V}^{-1} \underset{\sim}{V}^{-1} \underset{\sim}{m}]^{1/2} . \qquad (3.75)$$

To compute W for a random sample of size $n = 2(1)50$, coefficients $\{a_i\}$ are located in tables provided by Shapiro and Wilk. [Note: $i(j)k$ denotes the integers i, $i+j$, $i+2j, \ldots, i+\delta j=k$.] They also provide percentage points for W based upon Johnson's [JOHN49] S_B curves.

Shapiro and Wilk compared the power of the W-test with that of several standard tests of normality:

chi-squared, third and fourth moments, Kolmogorov-Smirnov, Cramer-Von Mises, a weighted Cramer-Von Mises using the Anderson-Darling method, Durbin's method, and a range/standard deviation test. Shapiro, Wilk, and Chen [SHAP68] also conducted a comparative study on the powers of several tests for univariate normality. Both studies concluded that the Shapiro-Wilk test has superior empirical power over a wide range of alternative nonnormal distributions. This fact, coupled with its ease of calculation, mak s W the clear choice for univariate testing of normality.

Subsequent to the first appearance of the Shapiro-Wilk test, two similar tests have been suggested. Tables of critical values $\{W_\alpha(n)\}$ and coefficients $\{a_i(n)\}$ for the Shapiro-Wilk test have only been provided for samples up to size 50. Shapiro and Francia [SHAP72] offered the following test statistic:

$$W' = [\sum_{i=1}^{n} b_i y_i]^2 / \sum_{i=1}^{n} [y_i - y]^2$$

where

$$\underset{\sim}{b}^T = (b_1, b_2, \ldots, b_n) = \underset{\sim}{m}^T / [\underset{\sim}{m}^T \underset{\sim}{m}]^{1/2} .$$

Values for $\underset{\sim}{m}$ have been determined for sample sizes of $n = 2(1)100(25)300(50)400$, and the null distribution of W' has been approximated. Weisberg and Bingham [WEIS75] suggested using

$$\tilde{m}_i = \Phi^{-1}([i - 3/8]/[n + 1/4]) ,$$

where $\Phi^{-1}(p)$ is the inverse of the standard normal at p, as an approximation for $\underset{\sim}{m}$ in the W' statistic. The $\tilde{W}'$ statistic has the computational advantage of no storage of constants for machine use. Both W' and $\tilde{W}'$ have approximately the same power as W [SHAP72, WEIS75].

3.3.3 A Multivariate Normality Test

Due to the superior power of the Shapiro-Wilk test, we developed a multivariate version of this test based on the union-intersection principle [MORR76]. Let $\underset{\sim}{X}$ be a p-dimensional column vector so that $\{\underset{\sim}{X}_i : 1 \leq i \leq n\}$ forms a random sample of size n from a p-variate distribution. We wish to test the hypothesis that

$$H_o : \underset{\sim}{X} \sim N_p(\underset{\sim}{\mu}_x, \underset{\sim}{\Sigma}_x)$$

for some mean vector $\underset{\sim}{\mu}_x$ and dispersion matrix $\underset{\sim}{\Sigma}_x$, against the alternative

$$H_1 : \underset{\sim}{X} \neq N_p(\underset{\sim}{\mu}_x, \underset{\sim}{\Sigma}_x) .$$

First we form an arbitrary linear combination $\underset{\sim}{c}^T\underset{\sim}{X}$ where $\underset{\sim}{c}^T$ is a nonnull p-dimension real vector. Therefore $\underset{\sim}{c}^T\underset{\sim}{X}$ is univariate and we may test the univariate hypothesis

$$H_o(\underset{\sim}{c}) : \underset{\sim}{c}^T\underset{\sim}{X} \sim N(\underset{\sim}{c}^T \underset{\sim}{\mu}_x, \underset{\sim}{c}^T \underset{\sim}{\Sigma}_x\underset{\sim}{c}) \tag{3.76}$$

against its alternative

$$H_1(\underset{\sim}{c}) : \underset{\sim}{c}^T\underset{\sim}{X} \sim N(\underset{\sim}{c}^T \underset{\sim}{\mu}_x, \underset{\sim}{c}^T \underset{\sim}{\Sigma}_x\underset{\sim}{c}) .$$

Let

$$Y_j \equiv j^{th} \text{ order statistic of } \{ \underset{\sim}{c}^T\underset{\sim}{X}_i : 1 \leq i \leq n\} \tag{3.77}$$

The univariate Shapiro-Wilk statistic for $\underset{\sim}{Y}$ is

$$W(\underset{\sim}{c}) = [\sum_{j=1}^{n} a_j Y_j]^2 / [\sum_{j=1}^{n} (Y_j - \overline{Y})^2] . \tag{3.78}$$

The acceptance region for $H_o(\underset{\sim}{c})$ is

$$W(\underset{\sim}{c}) \geq W_\beta(n) \tag{3.79}$$

where $W_\beta(n)$ is the critical value for the univariate test. Now H_o is true if and only if $H_o(\underset{\sim}{c})$ is true for all nonnull $\underset{\sim}{c}$. Thus we will accept H_o if and only if we accept all the univariate hypotheses $H_o(\underset{\sim}{c})$ for all $\underset{\sim}{c}$

in R^p. Thus, the acceptance region for H_o is given by the intersection

$$\bigcap_{c}[W(\underset{\sim}{c}) \geq W_{\beta}(n)] \ . \tag{3.80}$$

This intersection is equivalent to the condition

$$W^* = \min_{\underset{\sim}{c}} W(\underset{\sim}{c}) \geq W_{\beta}(n) \ . \tag{3.81}$$

When the null hypothesis is true, W^* will have a particular CDF. From this, critical values for $W_{\beta}(p, n)$ could be calculated and thus, for a test of level β, we accept H_o if

$$W^* \geq W_{\beta}(p, n) \ . \tag{3.82}$$

Now locating W^* is equivalent to solving each of the following quadratic programming problems:

$$QP(\sigma) : \text{Maximize } z = \underset{\sim}{Y}^T\underset{\sim}{Y}$$

subject to

$$\underset{\sim}{1}^T\underset{\sim}{Y} = 0$$

$$\underset{\sim}{a}^T\underset{\sim}{Y} = 1$$

$$Y_i - \underset{\sim}{c}^T\underset{\sim}{X}_{\sigma(i)} = 0, \ 1 \leq i \leq n$$

$$Y_j - Y_{j+1} \leq 0, \quad 1 \leq j \leq n-1$$

$$\underset{\sim}{Y} = [Y_1, \ldots, Y_n] \varepsilon R^n, \ \underset{\sim}{c} = [c_1, \ldots, c_p] \varepsilon R^p$$

where $\sigma(i)$ is the image of i under the permutation σ of the integers $1, \ldots, n$ and $\underset{\sim}{a}$ is given by equation (3.75). Thus, QP(σ) is a problem in n + p unrestricted variables with 2n + 1 linear constraints, where z is a convex function and the constraints form a convex solution space. There are n! problems of the form QP(σ) corresponding to each possible permutation σ. We propose the following heuristic to identify and solve the appropriate problem QP(σ). Let

$$\underset{\sim}{A} = \sum_{j=1}^{n} (\underset{\sim}{X}_j - \overline{\underset{\sim}{X}})(\underset{\sim}{X}_j - \overline{\underset{\sim}{X}})^T . \tag{3.83}$$

For m = 1, ..., n, we compute the statistics

$$U_j \equiv (\underset{\sim}{X}_m - \overline{\underset{\sim}{X}})^T \underset{\sim}{A}^{-1} (\underset{\sim}{X}_j - \overline{\underset{\sim}{X}}) \ , \ 1 \leq j \leq n \tag{3.84}$$

and let $U_{(1)}, \ldots, U_n$ indicate the ordered values. Now we evaluate

$$W_m = \frac{[\sum_{j=1}^{n} a_j U_{(j)}]^2}{(\underset{\sim}{X}_m - \overline{\underset{\sim}{X}})^T \underset{\sim}{A}^{-1} (\underset{\sim}{X}_m - \overline{\underset{\sim}{X}})} \ , \ 1 \leq m \leq n . \tag{3.85}$$

Each value of m is associated with a particular permutation σ defined by the relation

$$U_{(j)} = U_{\sigma(j)} \ , \ 1 \leq j \leq n$$

The value of m minimizing (3.85) thus identifies the permutation σ_o and the problem QP(σ_o) which should be solved. The final test statistic is given by

$$W^* = (\underset{\sim}{a}^T \underset{\sim}{Y}_o)/(\underset{\sim}{Y}_o^T \underset{\sim}{Y}_o) = 1/(\underset{\sim}{Y}_o^T \underset{\sim}{Y}_o) \qquad (3.86)$$

where $\underset{\sim}{Y}_o$ is the optimal solution vector to the quadrataic program QP(σ_o). We must note that it has not been established that the use of W_m will guarantee that the proper permutation is selected. A rigorous demonstration of the validity of this procedure is the subject of ongoing research. Once this has been accomplished, the null distributions of the resulting test statistic (3.86) for various values of n and p can be estimated by applying Johnson's S_B system of curves [JOHN49] to simulation-generated empirical distributions.

CHAPTER IV

EXPERIMENTAL PROCEDURE

To gain insight into the problems of relative bias and variance reduction and to determine the effectiveness of the two-stage control procedure, four queueing systems were selected for simulation testing. This chapter presents a description of these models, a discussion of available performance measures, and an analysis of the validation procedure.

4.1 Selection of Experimental Systems

Queueing models have become a standard experimental vehicle for controlled simulation. These include open, closed, and mixed systems. In an open system, customers arrive to the system, are serviced at one or more stations, and depart. An example of an open system is a retail center where customers enter, make a purchase, and leave. In a closed system, a fixed number of customers remain within the system during its operation. An on-line computer with a fixed number of terminals is such a system. Mixed systems contain both open and closed classes of customers. An example of

this is a computer system with batch (open) input and a fixed number of on-line (closed) terminals.

The first system selected for analysis was the M/M/1 queue. This system was appealing because of its analytical tractability. The system response variables we examined were the customer's total average time in system and the steady-state proportion of time that the server was busy. The second response is hereafter referred to as the station utilization. This was the only open queueing system we examined.

The second stochastic model we chose was a periodic review inventory model. The system was operated under a stationary (s, S) inventory policy. Let d_n be the demand in period n and X_n be the total inventory on hand at the beginning of period n. Thus

$$X_{n+1} = \begin{cases} X_n - d_n, & d_n \leq X_n - s \\ S, & \text{otherwise} \end{cases} \tag{4.1}$$

where s is the reorder point and S is the reorder (or stock control) level. There are initially $X_0 = S$ units in inventory and a return to this state signals the beginning of a new regenerative cycle. The response variables we considered were $\bar{X}$, the average number on

hand, and π_i, the long-run proportion of time that there are i units on hand. Examination of the (s, S) inventory model permits us to study the behavior of the control procedures under a different correlation structure. For a covariance stationary process $\{ X_t, t = 1, 2, \ldots\}$ define ρ_j to be the correlation between X_t and X_{t+j}. This is given by

$$\rho_j = \mathrm{Cov}(X_t, X_{t+j}) / \sigma^2.$$

In general, the response time variable for all queueing systems have a similar correlation structure. Figure 4.1 shows the correlation function for system 1. For the (s, S) inventory model the correlations between the inventories on hand for various time lags is negative for odd-numbered lags and positive for even-numbered ones. The correlation function for this system is shown in Figure 4.2.

The third system we considered was the central server model, shown in Figure 4.3. This is frequently used as a simple model of a multiprogrammed computer system with service center 1 representing the processor and the other service centers representing input-output devices. The system consists of three service centers, each of which has s_i servers, i = 1, 2, 3. The number

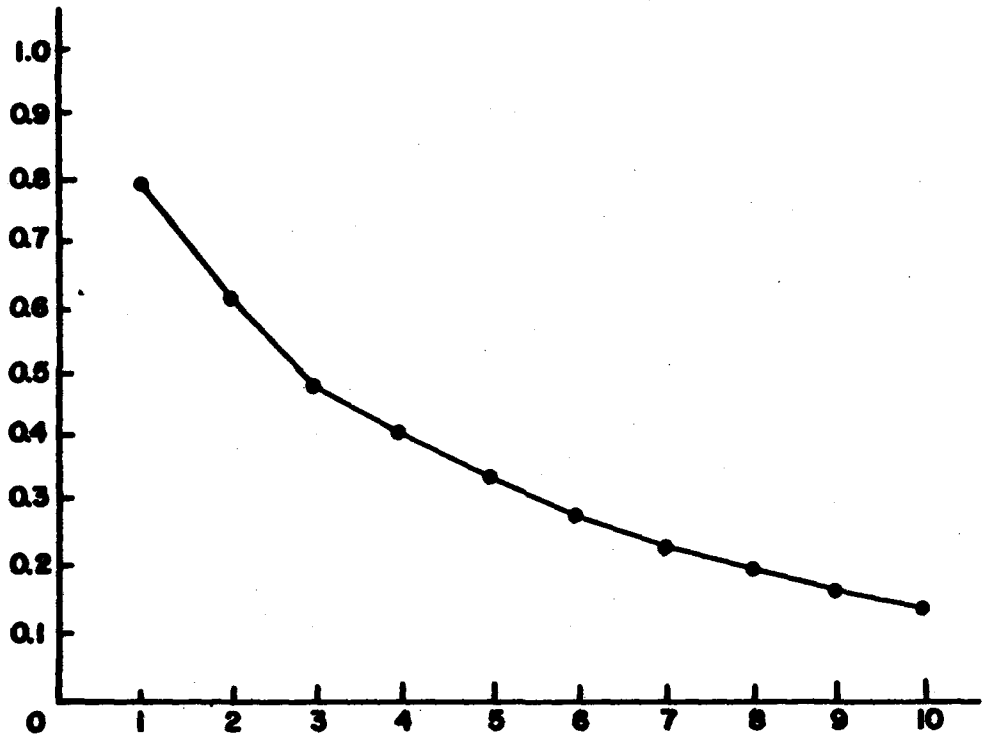

Figure 4.1 Correlation Function ρj for System 1

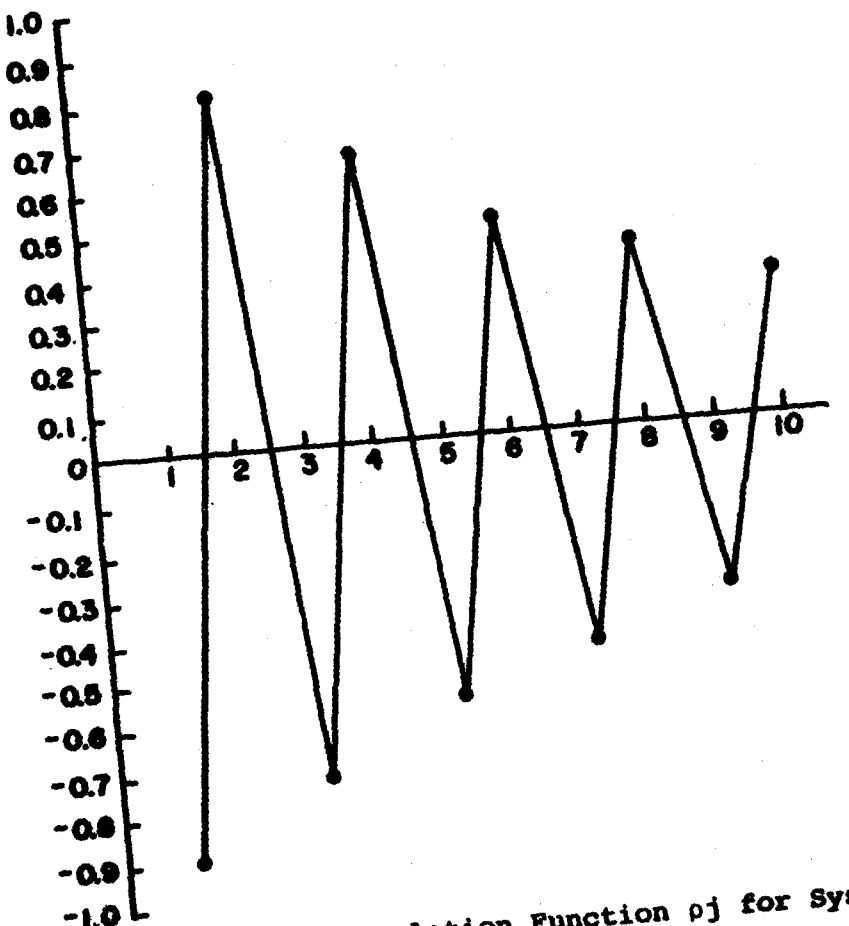

Figure 4.2 Correlation Function ρj for System 2

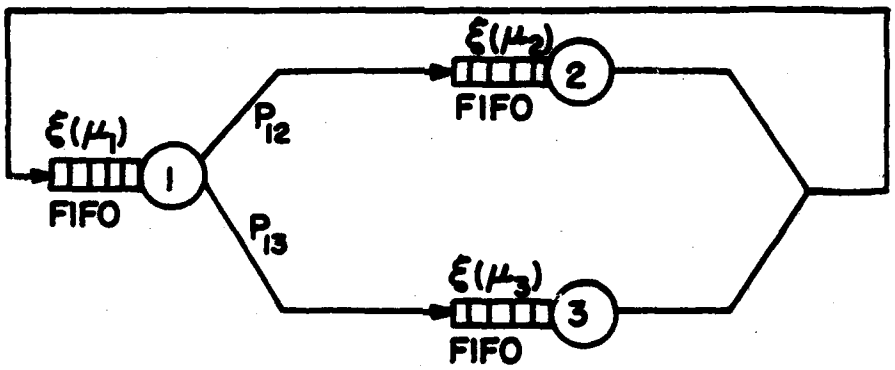

Figure 4.3 Central Server Model

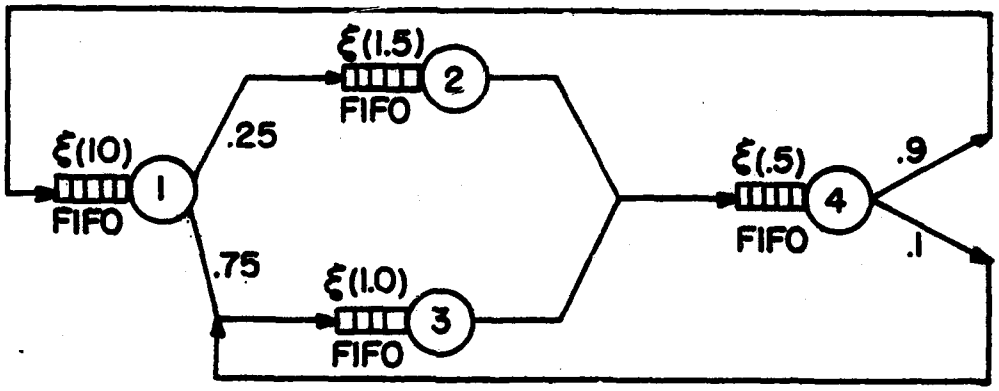

Figure 4.4 Machine Repair Model

of customers (that is, the level of multiprogramming) is fixed and is equal to N. Initially all N customers are at station 1. Service time at station 1 is exponentially distributed with mean μ_1. With probability p_{12}, a customer leaving service center 1 immediately enters service center 2 where he joins a FIFO queue to await service. Service time at station 2 is iid exponential with mean μ_2. Alternatively, a customer leaving station 1 enters service center 3 with probability $p_{13} = 1 - p_{12}$ to join a FIFO queque and await service there. Service times at station 3 are iid exponential with mean μ_3. After completion of service at service centers 2 or 3, the customer returns to center 1. The response variable examined here was the time between successive arrivals by a customer to service center 1.

The fourth stochastic model we examined was a variation of the machine repair model. This system, shown in Figure 4.4, consists of four queues and a fixed number of units N. Initially, all N units are at station 1 with s_1 units in operation and $N - s_1$ waiting in the queue as spares. The time until failure of an operational unit at station 1 is iid exponential with mean μ_2. Upon failure, a unit is sent for repair. With probability p_{12}, a major repair is required at

station 2. With probability $p_{13} = 1 - p_{12}$, a minor repair is needed at station 3. Stations 2 and 3 are FIFO queues with s_2 and s_3 repairmen respectively. Repair times are iid exponential with mean μ_2 for a major repair and mean μ_3 for a minor repair. Following repair, a unit proceeds to station 4 for inspection on a FIFO basis by one of the s_4 inspectors each having iid exponential service times with mean μ_4. A unit will fail inspection with probablity p_{43}. Should it fail, it is sent back to station 3 for further repair. Otherwise, it is returned to station 1 where it joins the queue of spares; if there are fewer than s_1 operational units, it goes into service immediately. The response variables examined were the average number of operational units at station 1; the server utilizations at stations 2, 3, and 4; and the time required for a newly-failed unit to reenter station 1.

We are able to obtain the desired values of the steady-state parameters analytically for all four of these systems. The method for calculating these is found in § 4.5.

The first three models presented were used to analyze the bias and confidence interval problems which exist when top-controlled regenerative analysis is used.

The fourth model was selected for validation of the two-state procedure. Results of the experimentation appears in Chapter V.

4.2 Performance Measures

To determine the value of the two-stage method of applying concomitant control variables, some standards of comparison are required. This section contains a discussion of available performance measures and a presentation of those methods selected for use.

Most performance measures compare the efficiency of direct simulation (subsequently labelled method 0) to the efficiency of some alternative procedure (subsequently labelled method 1) for variance reduction or confidence interval estimation. This relative efficiency factor of method 1 to method 0 may be based upon the cost involved, the gain or loss of precision (accuracy), or the reliability of the technique.

The cost of a technique is generally a reflection of the amount of computation required by that method. Hammersley and Handscomb [HAMM64] proposed that this should be a measure of the elapsed computer time τ_i, $i = 0, 1$; thus they proposed the

$$\text{labor ratio} = \tau_0 / \tau_1$$

as a measure of cost. Moy [MOY65] suggested using the computer processing charges, γ_i, required to obtain a fixed-width confidence interval by each technique $i = 0, 1$. Moy used as his performance measure the percentage of original cost saved,

$$\% \text{ gain} = 100\ (\gamma_0 - \gamma_1)/\gamma_0. \tag{4.2}$$

Both of these methods are difficult to use in practice. The results obtained depend on the computing machinery used and the methods by which computing time is charged.

The precision of method i is usually considered to be inversely proportional to its estimator variance σ_i^2. Cochran [COCH77] expressed the relative precision of method 1 to method 0 as

$$\% \text{ relative precision} = 100\,\sigma_0^2/\sigma_1^2. \tag{4.3}$$

Hammersley and Handscomb [HAMM64] proposed a comparable measure:

$$\text{variance ratio} = \sigma_0^2/\sigma_1^2. \tag{4.4}$$

Kish [KISH65] considered using the "design effect"

$$\text{deff} = \sigma_1^2/\sigma_0^2. \tag{4.5}$$

This was later described by Lavenberg [LAVE77(I), (II); 78; 79] as the "minimum variance ratio." Kleijnen [KLEI74] suggested using the percentage of the variance of method 0, σ_0^2, that was eliminated using method 1:

$$\% \text{ variance reduction} = 100[(\sigma_0^2 - \sigma_1^2)/\sigma_0^2)]. \tag{4.6}$$

Several researchers [HEID78, LAVE79, IGLE79] have concentrated on the reduction of the width of the resulting confidence intervals:

$$\text{confidence interval reduction } \Delta = [t_1\sigma_1]/[t_2\sigma_2] \tag{4.7}$$

where t_0 and t_1 are selected critical values of the distributions relevant to each of the methods. In all of these methods, the sample variances, $\hat{\sigma}_0$ and $\hat{\sigma}_1$, are used when necessary.

For an estimand θ, the accuracy of the estimator $\hat{\theta}$ derived by method i is an expression of the size of the error $\hat{\theta}_i - \theta$ [COCH77, HANS53, RAJ68]. The bias

$$B_i \equiv E[\hat{\theta}_i] - \tag{4.8}$$

reflects the systematic component of the error, while the mean square error

$$MSE_i \equiv E[(\hat{\theta}_i - \theta)^2] = \sigma_i^2 + B_i^2 \qquad (4.9)$$

takes into account bias as well as precision as a measure of the overall accuracy of method i. Rao [RAO69] studied the performance of a variety of ratio estimators in comparison to the classical ratio estimator, method 0. He used two measures of accuracy for each alternative estimator:

$$\% \text{ relative accuracy for method } i = 100 \cdot MSE_i / MSE_0 \qquad (4.10)$$

and

$$\% \text{ bias ratio for method } i = 100 \cdot |B_i| / \sqrt{MSE_i}. \qquad (4.11)$$

Reliability is taken to be a measure of the actual coverage probability

$$P_i = P_r \{ \hat{\theta}_i - t_i \hat{\sigma}_i \leq \theta \leq \hat{\theta}_i + t_i \hat{\sigma}_i \} \qquad (4.12)$$

of confidence intervals for θ that are constructed using that method [WILS78; LAVE78, 79]. Lavenberg et al. [LAVE79] considered the gain or loss of coverage achieved by method 1 relative to method 0 under the same conditions:

$$\text{coverage gain} = \hat{P}_1 - \hat{P}_0. \qquad (4.13)$$

Wilson [WILS78] used a similar measure to compose an alternative technique but required that the confidence intervals be adjusted to a common width.

Some of the available performance measures attempt to combine some of the basic measures into a single overall figure of merit. Hammersley and Handscomb [HAMM64] felt that any measure of efficiency should incorporate cost and precision. They proposed using a product of their variance and labor ratios to obtain

$$\text{efficiency gain} = (\tau_0 \sigma_0^2)/(\tau_1 \sigma_1^2). \qquad (4.14)$$

Som [SOM73] considered cost and accuracy to be of significance and offered

$$\text{relative cost efficiency} = (\gamma_0 \cdot MSE_0)/(\gamma_1 \cdot MSE_1) \qquad (4.15)$$

as a performance measure. Both of these standards for efficiency clearly have the same problems associated with any cost measure.

The selection of performance measures to be applied in this research was based upon the decision that the evaluated technique should not disrupt the normal course of the simulation in any way. Therefore the

alternative methods simply utilize available simulation-generated data in different manners. Experimentation revealed that the CPU time required to obtain the simulation data for each collection of experiments greatly outweighed the time involved in applying the various sets of control variables. Therefore, any differences in cost among the various alternatives is overshadowed by the basic simulation cost. Consequently, cost was omitted as a criterion for the performance of any method. Kleijnen's variance reduction percentage (4.6) was selected because it seems to have become a standard in simulation experimentation. Although researchers have used a variety of criteria such as (4.3), (4.4), and (4.5), they frequently returned to (4.6) in the discussion of their results. Additionally, for control variate analysis, the variance reduction percentage corresponds to the square of the coefficient of correlation [LAVE81]. The bias factor B_i given by (4.8) was also averaged over several replications of each experiment to determine the accuracy of the resulting point estimates. Finally to incorporate the reliability criterion, the estimated coverage $\hat{P}_i$ for each variant of controlled regenerative analysis was computed along with the coverage gain (4.13).

4.3 Selection of Experimental Parameters

For each of the stochastic systems selected for examination, a meta-experiment consisting of 50 independent simulation runs was performed. For each experiment, a group of regenerative tours was used to construct point estimates and confidence interval estimates for the selected response variables. These estimates were constructed with and without the use of control variables. We then averaged our selected performance measures over all of the experiments within the meta-experiment.

In order to obtain reliable results with the regnerative method, a fairly large number of tours are required [LAVE78]. In this research, we used from 500 to 3250 regenerative cycles in each experiment. Wilson [WILS79] showed that when using top-controlled regenerative analysis, a large relative bias is encountered when the number of tours used is small (less than 100 tours). Additionally, it has been found that a large number of short tours is preferable. For this reason, the regeneration points selected for each of our experimental systems were those states which occured the most frequently. In addition, for the closed systems, the number of customers was kept lower to increase the rate

of regeneration. In order to obtain the convergence to joint normality of the control variates for these short tours, we found it necessary to accumulate controls over a batch of tours. The method for selecting a minimum batching size is presented in § 5.3.

For the M/M/1 queue, light traffic intensity results in more frequent regeneration. We therefore chose an interarrival rate of 1.0 with a service rate of 2.0 for a traffic intensity of 0.5. The regeneration epochs are defined to be those points in time when an arriving customer finds the system empty and idle.

Frequency of regeneration in the (s, S) inventory model is governed primarily by the number of states and the demand function. To limit the number of states we let $s = 3$ and $S = 6$. The demand in each period is 0, 1, or 2 each with probability 1/3. Since asymptotically the choice of a regenerative state has no effect on the response variables, we are free to choose any state to begin our cycle [CRAN75(I)]. We found that $X_n = 3$ occurs most frequently and therefore let $X_o = 3$ and used it as our regenerative state.

In selecting the experimental parameters for systems 3 and 4, the same criteria were used. The regeneration epochs occurred when all of the

customers/units were at station 1. Other parameters are given in Tables 4.1 and 4.2.

4.4 Validation Procedure

Analysis of the experimental results requires the comparison of estimators found through application of the various methods to the steady-state values of the response variables. If the true values of the estimands are known, it is possible to estimate the true coverage of the nominal 90% confidence intervals derived for those parameters. Methods for obtaining the analytical values for the response variables in each of the systems will be discussed in this section.

4.4.1 Results for the M/M/1 Queue

In a basic open queueing process, customers arrive in accordance with an interarrival process, join a queue to await service from one of the s servers, and are served according to some service time distribution. In the case of the M/M/1 queue, customers arrive according to a Poisson process with arrival rate λ, enter a FIFO queue, and await service from one server whose service times are iid exponential with rate μ. The utilization factor [HILL80] for such a system is given by

Table 4.1

Service Center Parameters for Systems 3 and 4

System	Number of units N	Mean Service Times μ_1	μ_2	μ_3	μ_4	Number of Servers s_1	s_2	s_3	s_4
3	8	1.0	.556	5.0	-	1	1	1	1
4	7	10.0	1.5	1.0	.5	5	1	1	1

Table 4.2

Branching Probabilities for Systems 3 and 4

System	P12	P13	P43	P41
3	.9	.1	-	-
4	.25	.75	.1	.9

$$\rho = \lambda / \mu . \tag{4.15}$$

To obtain the steady-state time in system, we employ Little's formula [LITT61] to obtain

$$W = L/\lambda = \rho/[(1 - \rho)\lambda]. \tag{4.16}$$

Thus, for our particular system, $\rho = 0.5$ and $W = 1.0$.

4.4.2 Results for (s, S) Inventory Models

The results for (s, S) models are presented here in the context of the specific model selected. System 2 is a Markov chain with four states [WAGN69]. If P_{ij} is the probability that the inventory level will change from i to j, then the transition matrix is given by

$$\underset{\sim}{P} = \begin{array}{c} \begin{array}{cccc} (3) & (4) & (5) & (6) \end{array} \\ \begin{bmatrix} 1/3 & 0 & 0 & 2/3 \\ 1/3 & 1/3 & 0 & 1/3 \\ 1/3 & 1/3 & 1/3 & 0 \\ 0 & 1/3 & 1/3 & 1/3 \end{bmatrix} \end{array} . \tag{4.17}$$

The steady-state probability π_i that the system is in state i is given by the solution to the equations

$$\underset{\sim}{\pi} = \underset{\sim}{P}\underset{\sim}{\pi} \tag{4.18}$$

$$\sum_i \pi_i = 1 . \tag{4.19}$$

The average number on hand μ_x, is therefore

$$\mu_x = \sum_i \pi_i \cdot i \ . \tag{4.20}$$

These values are contained in Table 4.3.

4.4.3 Results for Closed Jackson Queueing Systems

Obtaining steady-state values for the parameters for systems 3 and 4 requires a combination of computational and theoretical results for closed Jackson queueing systems [GORD67, BUZE73, SOLB78]. Results presented in this section are in the context of the validation model, system 4. System 4 is a closed Markovian queueing network with M = 4 stations and N = 7 customers, and iid exponentially distributed service times. Let P_{ij} be the probability that a unit completing service at station i will be immediately sent to station j. The routing matrix $\underset{\sim}{P} = [p_{ij}]$ is given by

$$\underset{\sim}{P} = \begin{bmatrix} 0 & .25 & .75 & 0 \\ 0 & 0 & 0 & 1 \\ 0 & 0 & 0 & 1 \\ .90 & 0 & .10 & 0 \end{bmatrix} . \tag{4.21}$$

Table 4.3

Values for Response Variables for Model 2

Response Variable	Value
$\overline{X}$	4.653
π_3	.217
π_4	.261
π_5	.174
π_6	.348

The vector of relative arrival rates $\underset{\sim}{\lambda} = [\lambda_1, \ldots, \lambda_m]$ to each station can be obtained by solving the traffic equation

$$\underset{\sim}{\lambda} = \underset{\sim}{\lambda} \; \underset{\sim}{P} \; . \tag{4.22}$$

Since the traffic equation only determines $\underset{\sim}{\lambda}$ up to scalar multiple, one component of $\underset{\sim}{\lambda}$ may be arbitrarily set and the remaining (M - 1) components are then obtained from (4.22). The relative utilization of station i is given by

$$\rho_i \equiv \lambda_i/(s_i \, \omega_i), \; 1 \leq i \leq M \tag{4.23}$$

where station i has s_i servers each with service rate $\omega_i = 1/\mu_i$. The state space S of this system consists of the set of all M-tuples $\underset{\sim}{x} = [x_1, \ldots, x_M]$, where x_i is the number of customers at station i, $1 \leq i \leq M$. Therefore

$$S = \{\underset{\sim}{x} : \sum_{i=1}^{M} x_i = N \text{ and } x_i \text{ is a non-negative integer}\}. \tag{4.24}$$

Let

$$\Psi_i(x_i) = \begin{cases} \rho_i x_i / x_i! \ , & 0 \le x_i \le s_i \\ \rho_i x_i / [s_i! s_i^{x_i - s_i}] \ , & x_i > S_i \end{cases} \tag{4.25}$$

and

$$G(M,N) = \sum_{x \in S} \prod_{i=1}^{M} \Psi_i(x_i). \tag{4.26}$$

The equilibrium state probability distribution for this system is given by [GORD67]

$$\pi(\underset{\sim}{x}) = [1/G(M,N)] \prod_{i=1}^{M} \Psi_i(x_i) \ , \ \underset{\sim}{x} \in S \tag{4.27}$$

Buzen [BUZE73] has developed techniques for computing the normalizing constant G(M,N), the marginal queue length distributions for each station, the station utilizations $\{U_i^*, 1 \le i \le M\}$, and other performance measures. The actual arrival rate λ_i^* to station i is then found by using the principle of job flow balance

$$\lambda_i^* = U_i^* \omega_i \ . \tag{4.28}$$

Little's formula [LITT61] may then be applied at the ith station to obtain the steady-state mean waiting time

W_i^* from the arrival rate λ_i^* and the mean number of units L_i^* awaiting service

$$L_i^* = \lambda_i^* W_i^* . \tag{4.29}$$

Solberg's queueing network analysis program CAN-Q [SOLB80] was used to compute these values for system 4. The results may be found in Table 4.4. For system 3 we are only interested in τ, the mean time between successive arrivals of a customer at station 1. The CAN-Q Program found this value to be 8.07.

4.4.4 Results for the GERT Analysis

For system 4, the mean response time is not available as a direct result of the CAN-Q analysis. To obtain this value, we rely on the GERT analysis techniques for generalized activity networks [PRIT66(I), (II), (III); WHIT69].

The GERT network shown in Figure 4.5 represents the repair process from the time an individual unit in system 4 fails until it is returned to station 1. Because we are only concerned with calculating τ, the mean response time, the branch traversal times are treated as constants using the mean service times $\{\mu_i\}$ found in Table 4.1 and the mean waiting times $\{W_i^*\}$ found in Table 4.4. The branch traversal probabilities

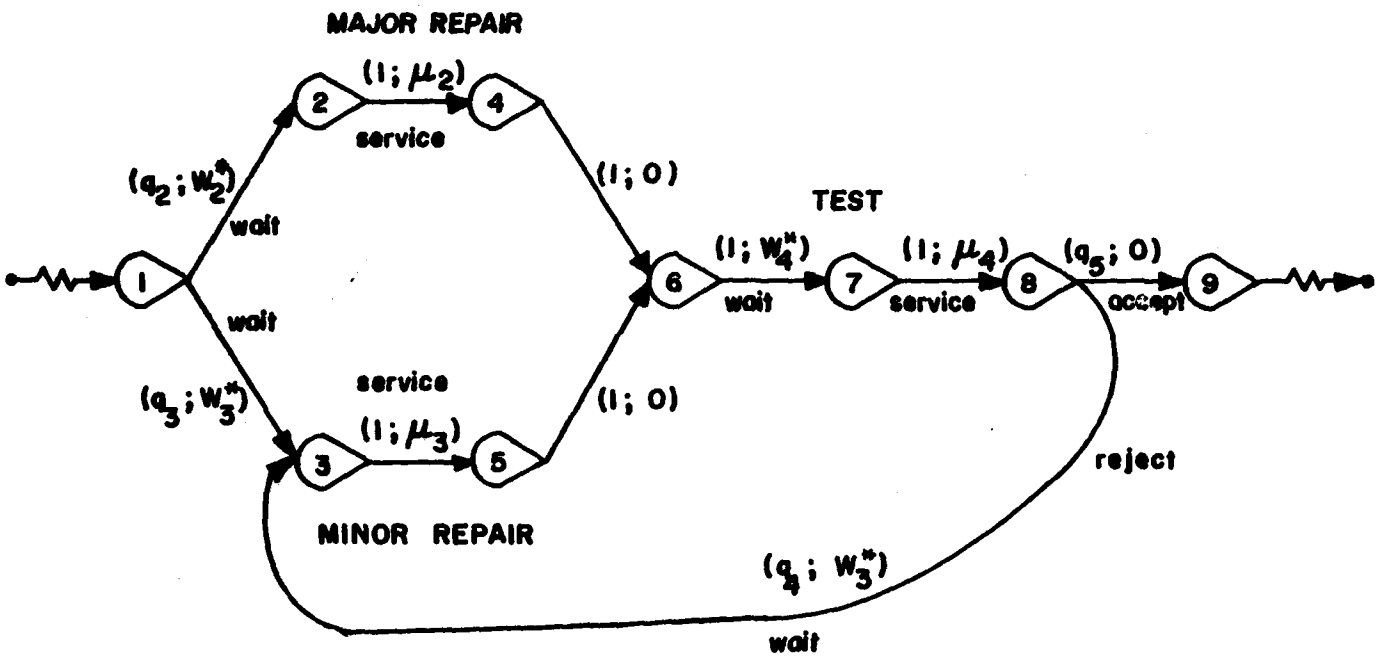

Figure 4.5 GERT Model of Response Time Process for System 4

Table 4.4

CAN-Q Results for Model 4

Station i	Utilization U_i*	Mean Queue Length L_i*	Mean Waiting Time W_i*
1	4.7809	1.004	2.0998
2	.17928	.036	.29969
3	.41169	.237	.57678
4	.26560	.085	.16068

correspond to the branching probabilities found in Table 4.2:

$$\begin{aligned} q_2 &= p_{12} \\ q_3 &= p_{13} \\ q_4 &= p_{43} \\ q_5 &= p_{41} \end{aligned} \tag{4.30}$$

Therefore the w-function [PRIT66(I), (II), (III)] for the branch from node j to node k is given by

$$w_{jk}(y) = qe^{cy} \tag{4.31}$$

where q is the appropriate branch traversal probability and c is the traversal time. Mason's rule [PRIT66(I)] holds that the equivalent w-function for the open network from node 1 to 9 is given by

$$w_E(y) = \frac{w_{12}w_{24}w_{46}w_{67}w_{78}w_{89} + w_{13}w_{35}w_{56}w_{67}w_{78}w_{89}}{1 - w_{35}w_{56}w_{67}w_{78}w_{83}} \tag{4.32}$$

Combining (4.31) and (4.32) we get

$$w_E(y) =$$

$$\frac{q_5\cdot\exp([W_4^*+\mu_4]y)\cdot\{q_2\cdot\exp([W_2^*+\mu_2]y)+q_3\cdot\exp([W_3^*+\mu_3]y)\}}{1 - q_4\cdot\exp([W_3^*+\mu_3+W_4^*+\mu_4]y)} \tag{4.33}$$

Since $w_E(0) = 1$, the mean response time is given by

$$\mu_E = \partial/\partial\, y[w_E(y)/w_E(0)]_{y=0}$$

$$= q_2(W_2^* + \mu_2) + [q_3 + (q_4/q_5)][W_3^* + \mu_3] + [1 + (q_4/q_5)][W_4^* + \mu_4]$$

$$\doteq 2.5418. \tag{4.34}$$

4.4.5 Selection of Ratio Estimators.

To perform our 2-stage procedure, we must obtain ratio estimators for each of the specified response variables. A variety of types of estimators are available. Suppose the response variable of interest is $r = E[f(X)]$ where f is a real-valued function and X is some stationary random variable associated with the simulation. In the context of regenerative simulation, we observe the process $\{ X(s), s \geq 0\}$, where $X(S) \xrightarrow{\mathcal{L}} X$, in IID cycles of lengths $\{ \alpha_i : i \geq 1\}$ and we collect values $\{Y_i : i \geq 1 \}$ for each cycle, where Y_i is given by

$$Y_i = \int_{\beta_i}^{\beta_i + 1} f[\underset{\sim}{X}(s)]ds \tag{4.35}$$

(here β_i denotes the ith regeneration epoch so that $\alpha_i = \beta_i + 1 - \beta_i$). Under mild restrictions on the sample paths of the process $\{X(s)\}$, the regenerative method ensures that

$$r = E[Y]/E[\alpha] \tag{4.36}$$

and that the pairs $\{(Y_i, \alpha_i)\}$ are iid. Let $\underset{\sim}{U}_i^T = (Y_i, \alpha_i)$ be a column vector with mean vector $\underset{\sim}{\mu}$ and covariance matrix $\underset{\sim}{\Sigma}$. Given a set of n cycles, we denote the sample mean vector by $\overline{\underset{\sim}{U}}$ and the sample covariance matrix by $\hat{\underset{\sim}{\Sigma}} = [\hat{\sigma}_{ij}]$. The classical regenerative ratio estimator is given by

$$\hat{r}_c(n) = \overline{Y}/\overline{\alpha} \tag{4.37}$$

Fieller [FIEL40] proposed using the estimator

$$r_f(n) = \frac{\overline{Y}\,\overline{\alpha} - k\,\hat{\sigma}_{12}}{\overline{\alpha}^{\,2} - k\,\hat{\sigma}_{22}} \,. \tag{4.38}$$

where $k = Z^2_{(1-\gamma/2)}/n$. This estimator is the midpoint of Fieller's 100 $(1-\gamma)$% confidence interval. Three other ratio estimators have been constructed in an attempt to reduce the bias found in the classical method. The jacknife estimator, an extension of the work of Quenouille [QUEN49, 56] is given by

$$\hat{r}_j(n) = [1/n] \sum_{i=1}^{n} [n(\overline{Y}/\overline{\alpha}) - (n-1)(\sum_{k \neq i} Y_k / \sum_{k \neq i} \alpha_k)]. \tag{4.39}$$

Tin [TIN60] proposed

$$\hat{r}_t(n) = [\overline{Y}/\overline{\alpha}] \{1+[\hat{\sigma}_{12}/(\overline{Y}\,\overline{\alpha}) - \hat{\sigma}_{22}/\overline{\alpha}^2]/n\}. \tag{4.40}$$

Beale [BEAL62] offered a similar estimator

$$\hat{r}_b(n) = [\overline{Y}/\overline{\alpha}] \cdot \{[1+\hat{\sigma}_{12}/(n\overline{Y}\,\overline{\alpha})]/[1+\hat{\sigma}_{22}/(n\,\overline{\alpha}^2)]\}. \tag{4.41}$$

All of these ratios are strongly consistent and are biased. Iglehart [IGLE75] compared these estimators in their use in regenerative simulation. For long simulation runs (i.e. many tours, as we have used here), he concluded that the classical ratio estimator is the preferred choice. We therefore chose to use that type of estimator in this research.

We shall now proceed to show the specific ratios employed. For the (s, S) inventory model we define the following functions:

$$f_1(i) = i$$

$$f_\ell(i) = I_{(\ell)}(i), \quad \ell = 3,\ldots,6 \tag{4.42}$$

where $I_{(\ell)}$ is the indicator function for state ℓ. If β_i is the starting time for the ith regenerative cycle, and $\alpha_i = \beta_{i+1} - \beta_i$, then we have for the ℓth "reward" on the ith cycle

$$Y_i^{(\ell)} = \sum_{j=\beta_i}^{\beta_{i+1}-1} f_\ell(X_j) \ , \ i \geq 1, \quad \ell = 1, 3, 4, 5, 6. \tag{4.43}$$

Crane and Iglehart [CRAN74] showed that

$$E[f_\ell(X)] = E[Y_1^{(\ell)}]/E[\alpha_1] \ . \tag{4.44}$$

Therefore, our ratio estimators are

$$\begin{aligned} \hat{X} &= \overline{Y}(1)/\overline{\alpha} \\ \pi_\ell &= \overline{Y}(\ell)/\overline{\alpha} \quad , \quad \ell = 3,\ldots,6 \end{aligned} \tag{4.45}$$

For system 3, the steady-state parameter of interest is RT*, the mean response time. Let t_i denote the ith observation of response time--that is, the ith time between successive arrivals by a customer to station 1. Let $Y_i = N \cdot (\alpha_i)$ where N is the fixed number of customers in system and α_i is the ith cycle length. Define

A_i = number of arrivals to station 1 on the ith tour.

From Little's formula and the regenerative structure of the system it can be shown that [LAVE77c]

$$RT^* = \lim_{n\to\infty}[1/n] \sum_{i=1}^{n} t_i \quad \text{w.p. } 1$$
$$= E[Y_i]/E[A_i] \ . \tag{4.46}$$

This sugests that we use

$$\hat{RT} = [N \cdot \ \bar{\alpha}]/\bar{A} \tag{4.47}$$

as our regenerataive estimator, where $\bar{\alpha}$ and $\bar{A}$ are the sample means.

For system 4, the steady-state parameters to be estimated are the average response time RT* from failure until completion of repair and the station utilizations $\{ U_i^*, 1 \leq i \leq 4 \}$. Let $x_i(t)$ be the number of customers at station i at time t. We define the following variables on the kth regenerataive cycle:

R_k = number of units completed on the kth tour

$$G_k(i) = \int_{\beta_k}^{\beta_{k+1}} \min \{ x_i(t), s_i \} dt, \ 1 \leq i \leq M$$

$$H_k = \sum_{i=2}^{M} \int_{\beta_k}^{\beta_{k+1}} x_i(t)dt \ .$$

From Little's formula and the regenerative structure of the system it can be shown that [LAVE77c]

$$RT^* = \lim_{n\to\infty}[1/n] \sum_{i=1}^{n} t_i \quad \text{w.p. } 1$$
$$= E[Y_i]/E[A_i] \ . \tag{4.46}$$

This sugests that we use

$$\hat{RT} = [N \cdot \ \bar{\alpha}]/\bar{A} \tag{4.47}$$

as our regenerataive estimator, where $\bar{\alpha}$ and $\bar{A}$ are the sample means.

For system 4, the steady-state parameters to be estimated are the average response time RT* from failure until completion of repair and the station utilizations $\{ U_i^*, 1 \leq i \leq 4 \}$. Let $x_i(t)$ be the number of customers at station i at time t. We define the following variables on the kth regenerataive cycle:

R_k = number of units completed on the kth tour

$$G_k(i) = \int_{\beta_k}^{\beta_{k+1}} \min \{ x_i(t), s_i \} dt, \ 1 \leq i \leq M$$

$$H_k = \sum_{i=2}^{M} \int_{\beta_k}^{\beta_{k+1}} x_i(t)dt \ .$$

From Little's formula and the regenerative structure of the system it can be shown that [LAVE77c]

$$RT^* = \lim_{n\to\infty}[1/n]\sum_{i=1}^{n} t_i \quad \text{w.p. } 1$$
$$= E[Y_i]/E[A_i] \ . \tag{4.46}$$

This sugests that we use

$$\hat{RT} = [N \cdot \bar{\alpha}]/\bar{A} \tag{4.47}$$

as our regenerataive estimator, where $\bar{\alpha}$ and $\bar{A}$ are the sample means.

For system 4, the steady-state parameters to be estimated are the average response time RT* from failure until completion of repair and the station utilizations $\{U_i^*, 1 \leq i \leq 4\}$. Let $x_i(t)$ be the number of customers at station i at time t. We define the following variables on the kth regenerataive cycle:

R_k = number of units completed on the kth tour

$$G_k(i) = \int_{\beta_k}^{\beta_{k+1}} \min\{x_i(t), s_i\}dt, \ 1 \leq i \leq M$$

$$H_k = \sum_{i=2}^{M} \int_{\beta_k}^{\beta_{k+1}} x_i(t)dt \ .$$

Thus $G_k(i)$ is the time-integrated number of busy servers at station i during cycle k and H_k is the time-integrated number of units being repaired in the kth cycle. Using the standard regenerative argument, we find

$$U_i^* = E[G_1(i)]/E[\alpha_1] \ , \ 1 \leq i \leq M \ . \tag{4.48}$$

which is estimated by

$$\hat{U}_i = \overline{G}(i)/\overline{\alpha}, \ 1 \leq i \leq M \ . \tag{4.49}$$

To estimate RT* we again employ Little's formula. Consider

$$\begin{aligned} E[H_k]/E[\alpha_k] &= \text{expected number of customers undergoing repairs} \\ &= \begin{Bmatrix} \text{steady-state} \\ \text{completion rate} \end{Bmatrix} \begin{Bmatrix} \text{expected} \\ \text{response time} \end{Bmatrix} \\ &= \frac{E[R_k]}{E[\alpha_k]} \cdot RT^* \ . \end{aligned}$$

Thus we have

$$RT^* = E[H_k]/E[R_k] \ , \tag{4.50}$$

which implies that our regenerative estimator should be

$$\hat{RT} = \overline{H}/\overline{R} \ , \tag{4.51}$$

where $\overline{H}$ and $\overline{R}$ indicate the sample means over a set of regenerative tours.

Simulation models of the various queueing systems were coded in SLAM [PRIT79]. FORTRAN IV routines were used to perform the control variable procedures. Listings for these programs appear in the Appendix. The results of the experimentation and an analysis of their implications are found in Chapter V.

CHAPTER V

EXPERIMENTAL RESULTS

This chapter presents the results of the meta-experiments described in Chapter IV. The first section contains the results of the first three models using top-controlled or bottom-controlled regenerative analysis. The results are discussed and their implications for the two-stage method are presented. In the second section we present the results of the fourth system, our validation model, and we compare the two-stage procedure with the other techniques. The last section summarizes the findings of this research and presents guidelines for the practical application of the method.

5.1 Demonstration of Bias and Coverage Problems

Throughout the literature we have seen a multitude of attempts to control the numerators of various ratio estimators. Iglehart and Lewis [IGLE79] mentioned the possibility of controlling the denominator but did not pursue the idea. In this section we present

the results of systems 1, 2, and 3 where we attempted to explore the merits of both of these techniques.

To effectively control the numerator or denominator of a ratio estimator, we are faced with task of finding controls which are strongly correlated with the appropriate regenerative measurements. The use of the "standardized service-time" and "standardized flow" variates appears to fill this requirement while taking advantage of all of sampling performed during the normal course of a simulation.

In Wilson's [WILS79] work he found that it was necessary to group the regenerative tours into batches to insure the convergence to normality for the service-time variables. In this research we found that batching was also necessary to obtain the convergence to joint normality of both classes of controls. Applying the univariate Shapiro-Wilk test to each control separately in an overall Bonferroni-type test for joint normality, we determined a minimum batching size which was used throughout the experimentation. This batching procedure is fully explained in § 5.3.1. Table 5.1 displays the batch sizes used. The observations $\{(Y_k, X_k) : 1 \leq k \leq n\}$ for each tour were averaged over the n/v batches of size v:

Table 5.1

Tour-Batching Used in Experimentation

System	Tours/Batch	Batch/Experiment
1	15	250
2	10	50
3	18	100
4	24	50

$$Y_j(v) = [1/v] \cdot \sum_{i=(j-1)v+1}^{jv} Y_i$$

$$1 \leq i \leq n/v = k \quad (5.1)$$

$$X_j(v) = [1/v] \cdot \sum_{i=(j-1)v+1}^{jv} X_i$$

For the jth batch of v tours, the standardized controls

$$\underset{\sim}{A} = [C_j, D_j] \quad (5.2)$$

were collected over the QC work stations and QD branching points. In the case of top-controlled analysis, we performed a regression of

$$Z_j(v) = Y_j(v) - \hat{r}X_j(v) \quad (5.3)$$

on the components of $\underset{\sim}{A}$ for each of the response variables. For bottom-controlled analysis, we performed a regression of $X_j(v)$ on the components of $\underset{\sim}{A}$. For each of the first three systems we shall use the following labelling scheme: (1) meta-experiments labelled "A" refer to uncontrolled estimation; (2) "B" meta-experiments are those using top-controlled estimators; and (3) "C" meta-experiments are those using bottom-controlled estimators.

For system 1, we have two sampling procedures involved: the sampling of interarrival times and service times. For each of these, service-time controls

were constructed and applied to the numerator and the denominator. Tables 5.2, 5.3, and 5.4 present the results of our selected performance measures. We see a marked bias problem in our top-controlled estimates. We also find large variance reductions accompanied by great degradations in coverage. In the case of bottom-controlled analysis, we find that we have over-corrected the bias in the classical estimate. While the confidence interval coverage is acceptable, it may be a direct result of the variance increase.

In the (s,S) inventory model, the only sampling which occurs during this simulation is that of the demand distribution. Thus our control variable for system 2 is based upon the periodic demand d_i. Tables 5.5, 5.6, and 5.7 display the values of the performance measures for this system. Again, we find that the top-controlled estimator is generally biased. The control has very little correlation with $\{Z_j : 1 \leq j \leq n/v\}$. Hence, we find very little variance reduction in meta-experiment B and consequently there are no problems in confidence interval coverage. Applying the control variable to the denominator produced somewhat mixed results. In general, the bias problem is worsened by the use of the bottom control, although in the case of

Table 5.2

Bias in Ratio Estimators for System 1

Meta-Experiment	Estimand	
	RT	U
A	.0052	.0015
B	.0536	.0148
C	- .0058	- .0014

Table 5.3

Variance Reduction Percentages Achieved in System 1

Meta-Experiment	Estimand	
	RT	U
B	57	95
C	- 33*	- 132*

*Indicates a variance increase

Table 5.4

Coverage of Nominal 90% Confidence Intervals for System 1

Meta-Experiment	Estimand	
	RT	U
A	89	88
B	28*	0*
C	84	88

*Significantly below the 90% level

Table 5.5

Bias in the Point Estimator for System 2

Meta-Experiment	Estimand				
	$\overline{X}$	π_3	π_4	π_5	π_6
A	- .0012	- .0002	- .0004	.0026	- .0020
B	.0019	.0001	- .0009	.0033	- .0025
C	- .0230	- .0012	- .0017	.0018	- .0036

Table 5.6

Variance Reduction Percentages Achieved in System 2

Meta-Experiment	Estimand				
	$\bar{X}$	π_3	π_4	π_5	π_6
B	3	2	3	7	7
C	- 139*	- 23*	- 10*	- 25*	- 19*

*Indicates variance increase

Table 5.7

Coverage of Nominal 90% Confidence Intervals for System 2

Meta-Experiment	Estimand				
	$\bar{X}$	π_3	π_4	π_5	π_6
A	96	92	86	90	98
B	90	88	90	86	96
C	88	88	92	90	92

π_5 there was a marked improvement. As was observed in system 1, valid confidence intervals were obtained under the condition of variance increases.

After examining the results of the first two systems, we determined that due to their lack of correlation with the denominator alone, the standardized service-time variables have very little effect when used in the denominator. Moreover, in a broad range of queueing systems, these variables have demonstrated their value as top controls. We therefore chose to consider service-time variates for controlling the numerator and flow variates for use in the denominator.

In system 3 we have available three top controls (service-time variables) and one bottom control (flow variable). Results for the selected performance measures appear in Tables 5.8, 5.9, and 5.10, and are similar to those found in the other systems.

Top-controlled regenerative analysis appears to be plagued with two fundamental defects. First, the procedure causes a relatively large bias to be introduced into the ratio estimator. Second, the variance reductions obtained are over-estimated since the variance estimator appears to systematically underestimate the true variance. Taken together, these phenomena

Table 5.8

Bias in the Point Estimator for System 3

Meta-Experiment	Estimand RT
A	.0025
B	- .0685
C	- .2931

Table 5.9

Variance Reduction Percentages Achieved in System 3

Meta-Experiment	Estimand RT
B	82
C	- 371*

*Indicates variance increase

Table 5.10

Coverage of Nominal 90% Confidence Intervals for System 3

Meta-Experiment	Estimand RT
A	94
B	40*
C	58*

*Significantly below the 90% level

result in degradation of confidence interval coverage. Schruben [SCHR79] evaluated several causes of loss of coverage in confidence intervals. If a normally distributed estimator has bias B and variance ^{2}, he showed that the coverage of a nominal 100(1 -)% confidence interval is given by

$$\Phi(-B/\sigma + Z_{1-\alpha/2}) - \Phi(-B/\sigma - Z_{1-\alpha/2}) \qquad (5.4)$$

where $\Phi(\cdot)$ is the standard normal distribution function. He also found that a bias as small as one tenth of the standard deviation creates coverage problems. In addition, Schruben showed that the performance of the interval estimator decreases as the sample size is increased. In terms of regenerative simulation, he found that when the point estimate contains little bias, the confidence intervals tend to be too wide; when a large bias exists, the interval widths are too narrow. Thus, we see that if the bias is increased and we obtain a simultaneous variance reduction, the coverage will fall significantly below the nominal level.

In the context of bottom-controlled estimators, other problems are in evidence. The application of bottom controls appears to over-correct the bias in the classical estimator. This may in turn lead to

increasing the magnitude of the bias. When this occurs, the coverage declines as in the case of top-controlled estimators. A greater problem in bottom-controlled estimators is the accompanying increases in the variance. While this is generally undesirable, we see from equation (5.4) that such an increase will maintain the prescribed coverage provided the bias is not significantly increased.

5.2 Experimental Results for the Two-Stage Procedure

The variance reductions achieved using the top-controlled regenerative estimators for systems 1 and 3 ranged from 57% to 95%. If the top-controlled bias problem could be solved and the confidence interval coverage improved, the technique would yield practical and beneficial results. Wilson [WILS79] suggested a potential solution to these problems. By increasing the batch size while holding the total number of batches constant, he found that coverage could be significantly improved. This is confirmed by the development in Chapter III which shows that the bias in top-controlled point estimators is of order $1/\sqrt{n}$. This technique, however, contradicts the purpose of applying controls; we wish to gain more information from shorter simulation

runs rather than being forced into longer and more expensive simulations.

When the experimental results of the top- and bottom-controlled estimators are examined together, we see that the strengths of one technique are the weaknesses of the other. Thus, taken together, the methods may be able to compensate for each other's deficiencies. The implementation of this idea is the two-stage estimator.

In the validation model, system 4, there are four queues which give rise to four service-time variables, and two branching points which enable us to form two standardized flow variables. For the two-stage procedure, we previously decided to apply all of the service-time variables to the numerator; for the denominator, the flow variate with the larger correlation was selected. The observed results $\{(Y_i, X_i) : 1 \leq i \leq n\}$ of the $n = 1200$ simulated tours for each experiment were averaged over $k = 50$ batches each of size $v = 24$. For the jth batch of tours, we accumulated the standardized components of the corresponding control vectors

$$\underset{\sim}{C}_j = [C_{1j}, C_{2j}, \ldots, C_{QC,j}]^T \tag{5.5}$$

$$\underset{\sim}{D}_j = [D_{1j}, D_{2j}, \ldots, D_{QD,j}]^T \tag{5.6}$$

where QC and QD are the number of top and bottom controls, respectively. Next we selected the column of the matrix $\underset{\sim}{D}$ which had the strongest correlation with $X(v)$, say $\underset{\sim}{D}^*$, and performed a regression of $X_j(v)$ on D_j^*. Let

$$X_j^*(v) = X_j(v) - dD_j^* \tag{5.7}$$

where d is the regression coefficient. We next performed a regression analysis of

$$Z_j = Y_j(v) - \hat{r}X_j^*(v) \tag{5.8}$$

on the components of $\underset{\sim}{C}_j$, $1 \leq j \leq k$. This procedure was performed for each of the response variables of interest. In addition, we also determined the uncontrolled, top-controlled and bottom-controlled estimators and the corresponding confidence intervals to allow a complete comparison of the three techniques for controlled regenerative analysis. Table 5.11 indicates which controls were applied in each run. Controls 1, 2, 3, and 4 are the service-time variates, and controls 5 and 6 are the flow variates. The correlations of controls 5 and 6 with the number completed per cycle were - .046 and .063, respectively. Their correlations with the tour length were - .114 and .047 respectively.

Thus, for the two-stage estimator, control 6 was applied to the denominator of the RT estimator and control 5 was used for the utilization estimators.

Tables 5.12, 5.13, and 5.14 present the results of the meta-experiments. The biases observed in the uncontrolled and one-stage controlled estimators closely resemble those found in systems 1, 2, and 3. In every case but U_1, the bias found in the two-stage estimator is smaller than that of the top-controlled estimate. (An explanation of the problems with U_1 will be presented in the next section.) The observed variance reductions and increases for meta-experiments B through E are also similar to those found earlier. Applying the two-stage method appears to yield variance reductions which are similar although slightly smaller than those found in top-controlled analysis. From a decision-maker's viewpoint, perhaps the most important aspect of a simulation is the confidence interval. It is here that the two-stage method proves its merit. For every estimand, the technique raises the coverage of the top-controlled estimator, giving truly valid confidence intervals.

To summarize the findings thus far in this chapter, we have seen that top-controlled regenerative

Table 5.11

Standardized Control Variates Selected for Use in System 4

Meta-Experiment	Selected Controls	Type of Estimator
A	none	classical
B	1, 2, 3, 4	top-controlled
C	5	bottom-controlled
D	6	bottom-controlled
E	5, 6	bottom-controlled
F	1, 2, 3, 4 and (5 or 6)	two-stage

Table 5.12

Bias in the Ratio Estimators for System 4

Meta-Experiment	Estimand				
	RT	U_1	U_2	U_3	U_4
A	.0025	- .0004	- .0010	.0006	- .0004
B	.0158	- .0045	.0005	.0034	.0014
C	- .0011	- .0022	- .0011	.0005	- .0006
D	- .0006	- .0062	- .0013	.0001	- .0008
E	- .0048	- .0090	- .0014	- .0001	- .0009
F	.0126	- .0103	.0003	.0029	.0011

Table 5.13

Variance Reduction Percentages Achieved in System 4

Meta-Experiment	Estimand				
	RT	U_1	U_2	U_3	U_4
B	64	52	61	78	89
C	- 9*	- 136*	- 8*	2	- 5*
D	- 23*	- 283*	- 2*	- 16*	- 18*
E	- 31*	- 409*	- 9*	- 14*	- 23*
F	59	- 214*	60	62	73

*Indicates variance increase

Table 5.14

Coverage of Nominal 90% Confidence Intervals for System 4

Meta-Experiment	Estimand				
	RT	U_1	U_2	U_3	U_4
A	92	92	92	92	92
B	84	82	82	80*	82
C	90	88	96	86	92
D	90	96	94	88	92
E	94	96	98	86	94
F	90	90	92	88	88

*Significantly below the 90% level

estimators provide significant variance reductions but ultimately result in unsatisfactory coverage of confidence intervals. The bottom-controlled method will provide valid intervals, but results in variance increases. The two-stage technique has been able to achieve large variance reductions while maintaining the nominal level of coverage.

5.3 Guidelines for Using the Developed Procedures

This section consolidates the findings of sections 5.1 and 5.2 into practical guidelines for the use of the developed technique. Test procedures are also presented to aid the practitioner in avoiding potential problems.

5.3.1 Insuring Convergence of Concomitant Variates

The two-stage method is dependent upon the convergence of the control variates to joint normality. In practice, we must insure that the vector of controls is sufficiently close to the limiting multivariate normal distribution for the expressions of relative bias and variance to be valid. To insure adequate convergence of the concomitant variables, the variates must be accumulated over time periods long enough for the sample sizes observed at the work stations and branching

points to produce a central-limit effect. While we have proposed a multivariate Shapiro-Wilk test in Chapter III, tables of critical values are not yet available. Thus, we are as yet unable to apply this procedure. As an alternative, we recommend the following procedure based upon the Bonferroni inequality and the Wiesberg and Bingham [WEIS75] version of the Shapiro-Wilk test:

1. Based upon cost and feasibility, choose a sample size n representing the number of cycles to be simulated in a pilot run. If possible, take $n \geq 1000$.

2. For each of the n cycles accumulate: (1) n_{ij}, the number of service times started at the ith service center or customers passing through the $(i - QC)^{th}$ branch during cycle j; and (2) the raw (unstandardized) controls

$$CR_{ij} = \sum_{k=1}^{n_{ij}} P_{ijk} \ , \ 1 \leq i \leq QC + QD, \ 1 \leq j \leq n \quad (5.9)$$

where P_{ijk} is the kth sample drawn at control point i in cycle j.

3. Let v be the batching size, t the test variable index, and ℓ the number of batches. Set $v = t = 1$ and $\ell = n$.

4. Compute the ℓ-dimensional vector m whose j^{th} component is given by

$$m_j = \Phi^{-1}(\{j - 3/8\} / \{\ell + 1/4\}), \quad 1 \leq j \leq \ell . \tag{5.10}$$

5. Compute the standardized controls

$$C_{ijv} = (n_{ijv})^{-1/2} \cdot \sum_{k=(j-1)v+1}^{jv} (CR_{ik} - n_{ik}\mu_i)/\sigma_i \tag{5.11}$$

where

$$n_{jiv} = \sum_{k=(j-1)n+1}^{jv} n_{ik}, \quad 1 \leq j \leq \ell , \tag{5.12}$$

and let $\overline{C}_{iv}$ denote the sample mean for the ith standardized control using batch size v.

6. Compute the modified Shapiro-Wilk statistic for the tth control

$$W' = \frac{(\underset{\sim}{m}^T \underset{\sim}{C}_{(t)v})^2/(\underset{\sim}{m}^T \underset{\sim}{m})}{\sum_{j=1}^{\ell} (C_{tjv} - \overline{C}_{tv})^2} , \tag{5.13}$$

where $\underset{\sim}{C}_{(t)v}$ indicates the sorted statistics.

7. For a given significance level α, compare W' to the critical value $W'(\alpha/Q)$, $Q = QC + QD$, given in

[SHAP72]. If $W' \geq W'(\alpha/Q)$, then variable t may be regarded as univariate normal. Set $t = t + 1$. If $t > Q$, the procedure terminates, otherwise, repeat step 6. If $W' < W'(\alpha/Q)$, let $v = v + 1$ and $\ell = [n/v]$, where [a] is the greatest integer function, and return to step 4.

This procedure will insure that we have selected a batch size v large enough for the control variables to be simultaneously univariate normal. With a batch size determined, the total number of cycles required for each experiment may be evaluated using the formula $N = v \cdot n_v$, where n_v is the number of batched observations desired.

5.3.2 Selection of Controls

The objective in applying the two-stage procedure is to obtain a variance reduction for the estimator while keeping bias to a minimum. Equations (3.72) and (3.74) for the relative bias and variance of the ratio estimator $\hat{r}(b, d)$ form the basis for our recommendations.

Due to the loss factors, it is recommended that the numbers of controls QC and QD be kept low. For QD, we suggest that one flow variable be selected for the denominator. The flow variate which has the largest correlation with the denominator is the logical choice.

To select variables to apply to the numerator of the regenerative ratio, Wilson [WILS79] gives a procedure based upon step-wise regression. We will point out that this is also based upon choosing a vector which will result in the largest correlation with the numerator.

5.3.3 Follow-Up Analysis

After the regression procedures have been performed, some subsequent analysis is required. In system 4, we saw that we had achieved our stated objective with each of our estimands but U_1. For the practitioner it is of vital importance to evaluate the magnitude of the relative bias and to examine the variance of the two-stage estimator. If he has followed the recommendations of § 5.3.1 and 5.3.2, he has only to examine two correlations to determine if the two-stage procedure has resulted in improved performance of the ratio estimator.

To evaluate the new variance estimator, the correlation between Y^*, the controlled numerator, and X^*, the controlled denominator, must be examined. If this correlation is positive, a variance reduction will be realized. Should this factor be negative, however, a variance increase is likely. The magnitude of a negative correlation will influence the size of the increase

(i.e., small correlations give little variance increase). In the case of U_1 in system 4, Y^* and X^* show a strong negative correlation. This may be seen from the fact that fewer busy servers at station 1 imply that more units are under repair, thus causing an increase in cycle length. This correlation between Y^* and X^* gives rise to the variance increase for U_1.

After examining the correlation between Y^* and X^*, the practitioner should next evaluate the relative bias. Again, if the previous suggestions have been followed, he need only determine the correlation between X^* and $\hat{r}(\underset{\sim}{b}, \underset{\sim}{d})$. A strong positive or negative correlation will cause the relative bias to be increased. As we have discussed earlier, this may give rise to lack of confidence interval coverage.

In conclusion, we have presented a two step method for checking variance and bias increases. Should the practitioner find that they have not been increased, he may feel confident that the procedure has worked. If, however, variance and/or bias has been increased, it is not clear that selecting another set of controls will result in an improvement. In this case, another method should be considered to obtain the estimates desired.

CHAPTER VI

SUMMARY, CONCLUSIONS, AND RECOMMENDATIONS

This chapter summarizes the contributions of this research. Recommendations for future research are also presented.

6.1 Research Overview

In this research we have accomplished the following objectives: (1) to develop a practical method for applying concomitant control variables in a regenerative setting to obtain variance reductions and valid confidence intervals; (2) to establish theoretical properties of the designated controls; (3) to validate and evaluate the developed method; and (4) to determine guidelines for using the method. Two types of standardized control variates were employed in a two-stage method to control both the numerator and the denominator of a regenerative ratio estimator. These variables have been proved to converge in distribution to a multivariate standard normal distribution over runs (or cycle-batches) of increasing length. This distribution served as a foundation for performing the required

regression analyses and for constructing the final confidence interval estimates. In addition, exact formulas for the relative bias and variance of the two-stage estimator were developed.

The validation and evaluation stage of this research showed that the developed method can yield substantial variance reduction while maintaining the confidence interval coverage. Variance reductions of 50%-75% were achieved with no loss of coverage. However, the two-stage method was observed to increase variance under certain conditions.

While not a main objective of this research, a new test for multi-variate normality was proposed. The test was based upon the univariate Shapiro-Wilk statistic.

The results of this research confirm the findings of others as to the practicality of applying control variates to regenerative queueing network simulations. The method developed here would allow the practioner to routinely incorporate variance reduction methods into his simulations. Following the guidelines presented here, some validation is possible when the model is not analytically tractable.

The most important contribution of this research is the two-stage method and the expressions for its relative bias and variance. We have shown these to be far superior to any other regenerative control procedures found in the literature today.

6.2 Recommendations for Future Research

The results of this research show that the two-stage method is potentially effective in regenerative systems. In practice, it may be difficult to identify a tour-defining state for the regenerative analysis. Even if one is located, the returns to that state may be so infrequent that a reasonable number of tours may not occur during a run of affordable length. Further investigation is needed to determine how the two-stage method performs using techniques presented in Chapter II for approximating a regenerative process.

The multi-variate Shapiro-Wilk test presented needs to be further developed. The procedure for locating the proper quadratic programming problem must be validated. In addition, the null distribution of the statistic must be determined to obtain tables of critical values. When fully developed, this test would have widespread applications extending far beyond simulation.

APPENDIX

```
      PROGRAM MAIN(INPUT,OUTPUT,TAPE5=INPUT,TAPE6=OUTPUT,TAPE7,TAPE8)
      DIMENSION NSET(5000)
C
C THIS PROGRAM IS DESIGNED TO SIMULATE OPEN REGENERATIVE
C QUEUEING SYSTEMS.   FOR EACH CYCLE OR BATCH OF CYCLES,
C THE TOUR LENGTH, TOTAL TIME IN SYSTEM, AND NUMBER OF
C CUSTOMERS AT THE INPUT, BRANCH, AND SERVICE POINTS AND
C THE ASSOCIATED VECTORS OF CONTROLS ARE COLLECTED.
C NOTE: TO COLLECT THE BRANCH DATA, FOR EACH BRANCH OF
C INTEREST J, THE USER  MUST COLLECT VIA THE NETWORK INPUT:
C        XX(2*J-1)=NUMBER OF CUSTOMERS ARRIVING TO BRANCH J
C        XX(2*J)=NUMBER OF SUCCESSES AT BRANCH J
C
      COMMON/SCOM1/ATRIB(100),DD(100),DDL(100),DTNOW,II,MFA,MSTOP,NCLNR
     1,NCRDR,NPRNT,NNRUN,NNSET,NTAPE,SS(100),SSL(100),TNEXT,TNOW,XX(100)
      COMMON QSET(5000)
      EQUIVALENCE (NSET(1),QSET(1))
      NNSET=5000
      NCRDR=5
      NPRNT=6
      NTAPE=7
      CALL SLAM
      STOP
      END
      FUNCTION USERF(IFN)
      COMMON/SCOM1/ATRIB(100),DD(100),DDL(100),DTNOW,II,MFA,MSTOP,NCLNR
     1,NCRDR,NPRNT,NNRUN,NNSET,NTAPE,SS(100),SSL(100),TNEXT,TNOW,XX(100)
      COMMON/UCOM1/NUMQS,CONTROL(20),NUMCUST(20),AMEAN(20),SD(20),
     1   CYSTART,SYSTIME,ISTREAM(20),NUMACT,NUMCYC,IBTCHSZ,ICYCCNT,NUMBR
C
C  USERF(1) PERFORMS INTERARRIVAL ON CREATE NODE
C  USERF(2) SHOULD BE ON ARC OUT OF CREATE NODE TO CHECK FOR REGENER.
C  USERF(3) SHOULD BE ON ALL EXIT ARCS TO COLLECT TIME IN SYSTEM
C  USERF(J+3), J.GT.0, SHOULD BE ON ARC OUT OF QUEUE J TO PERFORM
C                SERVICE TIME ACTIVITIES
C
      IF (IFN.GT.3) GO TO 4
      GO TO (1,2,3), IFN
C
C  INTERARRIVAL COMPUTATIONS (ASSUMED EXPONENTIAL)
C
1     ATIME=EXPON(AMEAN(1),ISTREAM(1))
      CONTROL(1)=CONTROL(1)+ATIME
      NUMCUST(1)=NUMCUST(1)+1
      USERF=ATIME
      RETURN
C
C VERIFY NEW CYCLE OR NOT
C
2     CALL CYCLECK
      USERF=0
      RETURN
C
C  COMPUTE TIME IN SYSTEM
C
3     SYSTIME=SYSTIME+(TNOW-ATRIB(1))
      USERF=0
      RETURN
C
C  PERFORM SERVICE TIME COMPUTATIONS (ASSUMED EXPONENTIAL)
C
4     I=IFN-2
      ATIME=EXPON(AMEAN(I),ISTREAM(I))
```

```
      CONTROL(I)=CONTROL(I)+ATIME
      NUMCUST(I)=NUMCUST(I)+1
      USERF=ATIME
      RETURN
      END
      SUBROUTINE INTLC
      COMMON/SCOM1/ATRIB(100),DD(100),DDL(100),DTNOW,II,MFA,MSTOP,NCLNR
     1,NCRDR,NPRNT,NNRUN,NNSET,NTAPE,SS(100),SSL(100),TNEXT,TNOW,XX(100)
      COMMON/UCOM1/NUMQS,CONTROL(20),NUMCUST(20),AMEAN(20),SD(20),
     1   CYSTART,SYSTIME,ISTREAM(20),NUMACT,NUMCYC,IBTCHSZ,ICYCCNT,NUMBR
C
C READ IN NUMBERS OF QUEUES AND BRANCHES
C
      READ (5,10) NUMQS,NUMBR
10    FORMAT(2I2)
      NUMACT=NUMQS
C
C  READ IN MEAN, STANDARD DEVIATION, AND RANDOM NUMBER STREAM
C  FOR THE INPUT PROCESS, SERVICE PROCESSES, AND THE BARCHINGS
C  IN THAT ORDER.
C
      DO 30 I=1,1+NUMQS+NUMBR
        READ (5,20) AMEAN(I),SD(I),ISTREAM(I)
20      FORMAT(2F10.5,I1)
30    CONTINUE
C  READ IN BATCHING SIZE AND TOTAL NUMBER  OF CYCLES
      READ (5,35) IBTCHSZ
35    FORMAT (I2)
      READ (5,37) NUMCYC
37    FORMAT (I6)
      ICYCCNT=0
      DO 40 I=1,20
        CONTROL(I)=0.0
        NUMCUST(I)=0
40    CONTINUE
      SYSTIME=0.0
      WRITE(6,50) NUMQS,IBTCHSZ,NUMCYC
50    FORMAT(1X,*THERE ARE*,I2,* QUEUES. BATCH SZ IS *,I2,/,1X,
     1   *SIMULATION IS FOR *,I6,* CYCLES.*)
      WRITE(6,60)
60    FORMAT(1X,*FILE*,10X,*MEAN*,12X,*SD*,12X,*STREAM*)
      WRITE(6,70) AMEAN(1),SD(1),ISTREAM(1)
70    FORMAT(1X,*INPUT*,6X,F10.5,5X,F10.5,10X,I2)
      DO 90 I=2,NUMQS+1
        J=I-1
        WRITE(6,80) J,AMEAN(I),SD(I),ISTREAM(I)
80      FORMAT(1X,*QUEUE *,I2,3X,F10.5,5X,F10.5,10X,I2)
90    CONTINUE
      CYSTART=TNOW
      RETURN
      END
      SUBROUTINE CYCLECK
      COMMON/SCOM1/ATRIB(100),DD(100),DDL(100),DTNOW,II,MFA,MSTOP,NCLNR
     1,NCRDR,NPRNT,NNRUN,NNSET,NTAPE,SS(100),SSL(100),TNEXT,TNOW,XX(100)
      COMMON/UCOM1/NUMQS,CONTROL(20),NUMCUST(20),AMEAN(20),SD(20),
     1   CYSTART,SYSTIME,ISTREAM(20),NUMACT,NUMCYC,IBTCHSZ,ICYCCNT,NUMBR
C
C CHECK FOR TOUR DEFINING STATE
C
      ICHECK=0
      DO 10 I=1,NUMQS
10      IF (NNQ(I)+NNACT(I) .NE. 0) ICHECK=1
      IF (ICHECK .EQ. 1) RETURN
```

```
C
C  A NEW CYCLE IS STARTING
C
      I=ICYCCNT
      ICYCCNT=ICYCCNT+1
      II=MOD(I,IBTCHSZ)
      IF (II .NE. 0) RETURN
      IF (I .EQ. 0) RETURN
C
C  SAVE LAST BATCHED DATA
C
      ALPHA=TNOW-CYSTART
      IF (IBTCHSZ .EQ. 1) GO TO 105
      DO 30 I=1,NUMQS+1
C
C  STANDARDIZE SERVICE-TIME CONTROLS
C
        A=NUMCUST(I)
        CONTROL(I)=(CONTROL(I)-A*AMEAN(I))/(SD(I)*SQRT(A))
30    CONTINUE
      DO 40 I=1,NUMBR
        J=I+NUMQS+1
        NUMCUST(J)=XX(I*2-1)
C
C  STANDARDIZE FLOW CONTROLS
C
        A=XX(2*I-1)
        CONTROL(J)=(XX(2*I)-A*AMEAN(J))/(SD(J)*SQRT(A))
40    CONTINUE
105   WRITE(8,107) ALPHA,SYSTIME,(NUMCUST(I),CONTROL(I),I=1,4)
107   FORMAT(2F10.4,4(I6,F10.4))
C
C  CHECK FOR END OF SIMULATION
C
      IF(ICYCCNT .GE. NUMCYC) MSTOP=-1
C
C REINITIALIZE FOR NEXT CYCLE
C
      SYSTIME=0.0
      DO 120 I=1,NUMQS+1+NUMBR
        CONTROL(I)=0.0
        NUMCUST(I)=0
120   CONTINUE
      CYSTART=TNOW
      RETURN
      END
```

```
GEN,DENNY,MM1 QUEUE,6/15/81;
LIM,1,2,500;
NETWORK;
      CREATE,USERF(1),,1;
      ACT,USERF(2);
      QUEUE(1);
      ACT/1,USERF(4);
      GOON;
      ACT,USERF(3);
      TERM;
      ENDNETWORK;
INIT,0;
FIN;
 1 0
1.0        1.0        9
.50        .50        9
15
375001
```

```
      PROGRAM MAIN(INPUT,OUTPUT,TAPE5=INPUT,TAPE6=OUTPUT,TAPE7,TAPE8)
C
C THIS PROGRAM IS DESIGNED TO SIMULATE CLOSED REGRENERATIVE
C QUEUEING SYSTEMS.  FOR EACH CYCLE AR BATCH OF CYCLES, IT
C COLLECTS:
C       1) TOUR LENGTH ALPHA
C       2) TOTAL CUSTOMER TIME IN SYSTEM
C       3) NUMBER OF COMPLETED CUSTOMERS
C       4) BUSY TIME FOR EACH SERVICE ACTIVITY
C       5) NUMBER OF CUSTOMES ARRIVING TO EACH BRANCH OR ACT.
C       6) CONTOL VARIABLE FOR EACH BRANCH AND ACTIVITY
C
C NOTE: IN THE NEWORK, THE USER MUST COLLECT
C       XX(2*J-1)=THE NUMBER OF CUSTOMERS ARRIVING TO BRANCH
C                 POINT J
C       XX(2*J)=THE NUMBER OF SUCCESSES AT BRANCH J
C
      DIMENSION NSET(5000)
      COMMON/SCOM1/ATRIB(100),DD(100),DDL(100),DTNOW,II,MFA,MSTOP,NCLNR
     1,NCRDR,NPRNT,NNRUN,NNSET,NTAPE,SS(100),SSL(100),TNEXT,TNOW,XX(100)
      COMMON QSET(5000)
      EQUIVALENCE (NSET(1),QSET(1))
      NNSET=5000
      NCRDR=5
      NPRNT=6
      NTAPE=7
      CALL SLAM
      STOP
      END
      FUNCTION USERF(IFN)
      COMMON/SCOM1/ATRIB(100),DD(100),DDL(100),DTNOW,II,MFA,MSTOP,NCLNR
     1,NCRDR,NPRNT,NNRUN,NNSET,NTAPE,SS(100),SSL(100),TNEXT,TNOW,XX(100)
      COMMON/UCOM1/NUMQS,CONTROL(20),NUMCUST(20),AMEAN(20),SD(20),
     1CYSTART,SYSTIME,ISTREAM(20),NUMBR,NUMCYC,IBTCHSZ,ICYCCNT,NUMCSTS,
     1NUMCOMP
C
C  IN NETWORK, USERF(I) IS ON ARC LEADING INTO QUEUE I.
C  USERF(I+NUMQS) IS ON ARC OUT OF QUEUE I.
C
      IF (IFN .GT. NUMQS) GO TO 4
C
C VERIFY NEW CYCLE OR NOT AND COMPUTE TRAVERSE TIME
C
      IF (IFN .NE. 1) RETURN
      SYSTIME=SYSTIME+(TNOW-ATRIB(1))
      NUMCOMP=NUMCOMP+1
2     CALL CYCLECK(IFN)
      USERF=0
      RETURN
C
C  PERFORM SERVICE TIME COMPUTATIONS
C
4     I=IFN-NUMQS
      ATIME=EXPON(AMEAN(I),ISTREAM(I))
      CONTROL(I)=CONTROL(I)+ATIME
      NUMCUST(I)=NUMCUST(I)+1
      USERF=ATIME
      IF (I .NE. 1) RETURN
      ATRIB(1)=TNOW+ATIME
      RETURN
      END
      SUBROUTINE INTLC
      COMMON/SCOM1/ATRIB(100),DD(100),DDL(100),DTNOW,II,MFA,MSTOP,NCLNR
```

```
     1,NCRDR,NPRNT,NNRUN,NNSET,NTAPE,SS(100),SSL(100),TNEXT,TNOW,XX(100)
      COMMON/UCOM1/NUMQS,CONTROL(20),NUMCUST(20),AMEAN(20),SD(20),
     1CYSTART,SYSTIME,ISTREAM(20),NUMBR,NUMCYC,IBTCHSZ,ICYCCNT,NUMCSTS,
     1NUMCOMP
C
C READ NUMBERS OF QUEUES, BRANCHES, AND CUSTOMERS
C
      READ (5,10) NUMQS,NUMBR,NUMCSTS
10    FORMAT(3I4)
C
C READ MEANS, STANDARD DEVIATIONS, AND RANDOM NUMBER STREAMS
C FOR QUEUES THEN BRANCHES
C
      DO 30 I=1,NUMQS+NUMBR
        READ (5,20) AMEAN(I),SD(I),ISTREAM(I)
20      FORMAT(2F10.5,I1)
30    CONTINUE
C
C READ BATCH SIZE AND TOTAL NUMBER OF CYCLES
C
      READ (5,35) IBTCHSZ
35    FORMAT (I2)
      READ (5,37) NUMCYC
37    FORMAT (I6)
      ICYCCNT=0
      DO 40 I=1,20
        CONTROL(I)=0.0
        NUMCUST(I)=0
40    CONTINUE
      SYSTIME=0.0
      NUMCOMP=0
      DO 45 I=1,2
45      XX(I)=0.0
      WRITE(6,50) NUMQS,IBTCHSZ,NUMCYC,NUMCSTS
50    FORMAT(1X,*THERE ARE*,I2,* QUEUES. BATCH SZ IS *,I2,/,1X,
     1   *SIMULATION IS FOR *,I6,* CYCLES.*,/,1X,
     1   *THERE ARE*,I3,* CUSTOMERS.*)
      WRITE(6,60)
60    FORMAT(1X,*FILE*,10X,*MEAN*,12X,*SD*,12X,*STREAM*)
      DO 90 I=1,NUMQS
        WRITE(6,80) I,AMEAN(I),SD(I),ISTREAM(I)
80      FORMAT(1X,*QUEUE *,I2,3X,F10.5,5X,F10.5,10X,I2)
90    CONTINUE
      CYSTART=TNOW
C
C LOAD INITIAL CUSTOMERS
C
      ATRIB(1)=0.0
      DO 100 I=1,NUMCSTS
100   CALL FILEM(1,ATRIB)
      RETURN
      END
      SUBROUTINE CYCLECK(IFN)
      COMMON/SCOM1/ATRIB(100),DD(100),DDL(100),DTNOW,II,MFA,MSTOP,NCLNR
     1,NCRDR,NPRNT,NNRUN,NNSET,NTAPE,SS(100),SSL(100),TNEXT,TNOW,XX(100)
      COMMON/UCOM1/NUMQS,CONTROL(20),NUMCUST(20),AMEAN(20),SD(20),
     1CYSTART,SYSTIME,ISTREAM(20),NUMBR,NUMCYC,IBTCHSZ,ICYCCNT,NUMCSTS,
     1NUMCOMP
      DIMENSION BUSY(20)
C
C  CHECK FOR TOUR DEFINING STATE
C
      I=NNQ(1)+NNACT(1)+1
```

```
      IF (I .NE. NUMCSTS) RETURN
C
C  A NEW CYCLE IS STARTING
C
      I=ICYCCNT
      ICYCCNT=ICYCCNT+1
      II=MOD(I,IBTCHSZ)
      IF (II .NE. 0) RETURN
      IF (I.EQ.0 .AND. IBTCHSZ.NE.1) RETURN
C
C  SAVE LAST BATCHED DATA
C
      ALPHA=TNOW-CYSTART
      DO 20 I=1,NUMQS
      CALL TTUTL(I,UAVG,UINT,DT)
        BUSY(I)=UINT
20    CONTINUE
      IF (IBTCHSZ .EQ. 1) GO TO 105
      DO 30 I=1,NUMQS
C
C  STANDARDIZE SERVICE-TIME CONTROLS
C
        A=NUMCUST(I)
        CONTROL(I)=(CONTROL(I)-A*AMEAN(I))/(SD(I)*SQRT(A))
30    CONTINUE
      DO 40 I=1,NUMBR
        J=1+NUMQS+I
        NUMCUST(J)=XX(I*2-1)
C
C STANDARDIZE FLOW CONTROLS
C
        A=NUMCUST(J)
        CONTROL(J)=(XX(I*2)-A*AMEAN(J))/(SD(J)*SQRT(A))
        BUSY(J)=0.0
40    CONTINUE
105   WRITE(8,107) ALPHA,SYSTIME,NUMCOMP,
     1 (BUSY(I),NUMCUST(I),CONTROL(I),I=1,6)
107   FORMAT(2F10.4,I4,6(F10.4,I4,F10.4))
C
C  CHECK FOR END OF SIMULATION
C
      IF(ICYCCNT .GE. NUMCYC) MSTOP=-1
C
C REINITIALIZE FOR NEXT CYCLE
C
      SYSTIME=0.0
      NUMCOMP=0
      DO 120 I=1,NUMQS+NUMBR
        CONTROL(I)=0.0
        NUMCUST(I)=0
120   CONTINUE
      DO 125 I=1,2
125    XX(I)=0.0
      CYSTART=TNOW
      CALL CLEAR
      RETURN
      END
      SUBROUTINE TTUTL(IACT,UAVG,UINT,DT)
      DIMENSION NSET(1)
      DIMENSION NND(2,2)
      COMMON QSET(1)
      COMMON/SCOM1/ ATRIB(100),DD(100),DDL(100),DTNOW,II,MFA,MSTOP,NCLNR
     1,NCRDR,NPRNT,NNRUN,NNSET,NTAPE,SS(100),SSL(100),TNEXT,TNOW,XX(100)
```

```
      IF (NSET(K)-11) 90,80,180
   80 NFSN=NSET(K+6)
      IF(NFSN.GT.0.OR.NSET(K+7).GT.0) GO TO 180
      NTYP=1
      KK=K+7
      GO TO 100
   90 NSSR=NSET(K+4)
      IF (NSSR.EQ.0) GO TO 180
      NTYP=2
      KK=K+6+NSET(K+5)
C
C***   COMPUTE AND WRITE SERVER STATISTICS
C
  100 IF (IK.EQ.1) GO TO 110
      IK=1
  110 NCAP=NSET(KK+13)
      INDEX=NSET(KK+3)
      IF (INDEX.NE.IACT) GO TO 170
      IF (XT.LE.0.) GO TO 200
      XBUSY=NSET(KK+12)
      IBUSY=XBUSY
      BLCK=NSET(KK+11)
      TDEL=TNOW-QSET(KK+6)
      XBT=XBUSY*TDEL
      UINT=(QSET(KK+4)+XBT)
      UTIL = UINT/XT
      UAVG = UTIL
      DT = XT
      STD=(QSET(KK+14)+XBUSY*XBT)/XT-UTIL*UTIL
      STD=SIGN(SQRT(ABS(STD)),STD)
      BLCK=(QSET(KK+5)+BLCK*TDEL)/XT
      XBMAX=QSET(KK+7)
      XIMAX=QSET(KK+8)
      IF (NCAP.GT.1) GO TO 130
      IF (IBUSY.EQ.1) GO TO 120
      IF (TDEL.GT.XIMAX) XIMAX=TDEL
      GO TO 140
  120 IF (TDEL.GT.XBMAX) XBMAX=TDEL
      GO TO 140
  130 IF (XBUSY.GT.XBMAX) XBMAX=XBUSY
      XIDL=-NSET(KK)
      IF (XIDL.GT.XIMAX) XIMAX=XIDL
  140 CONTINUE
      GO TO 200
  170 KK=NSET(KK+1)
      IF (KK.GT.0) GO TO 100
  180 CONTINUE
      GO TO 200
  190 CALL ERROR (568)
  200 RETURN
C
      END
      SUBROUTINE UMONT(ITRACE)
      COMMON/SCOM1/ATRIB(100),DD(100),DDL(100),DTNOW,II,MFA,MSTOP,NCLNR
     1,NCRDR,NPRNT,NNRUN,NNSET,NTAPE,SS(100),SSL(100),TNEXT,TNOW,XX(100)
      XX(50)=NNACT(1)+NNQ(1)
      XX(51)=NNACT(2)+NNQ(2)
      XX(52)=NNACT(3)+NNQ(3)
      RETURN
      END
```

```
GEN,DENNY,SYSTEM 4,6/15/81;
LIM,4,2,10;
NETWORK;
ONE     GOON;
          ACT,USERF(1);
        QUEUE(1);
          ACT(5)/1,USERF(5);
        ASSIGN,XX(1)=XX(1)+1.;
          ACT,,.25,Q2;
          ACT,,.75,Q3A;
Q2      QUEUE(2);
          ACT/2,USERF(6),,Q4;
Q3A     ASSIGN,XX(2)=XX(2)+1.;
          ACT,,,Q3;
Q3      QUEUE(3);
          ACT/3,USERF(7),,Q4;
Q4       QUEUE(4);
          ACT/4,USERF(8);
        ASSIGN,XX(3)=XX(3)+1.0;
          ACT,,.9,ONE;
          ACT,,.1,Q3B;
Q3B     ASSIGN,XX(4)=XX(4)+1;
          ACT,,,Q3;
        ENDNETWORK;
INIT,0;
FIN;
   4    4    7
10.        10.        9
1.5        1.5        9
1.0        1.0        9
.5         .5         9
.75        .433       9
.1         .3         9
24
 60000
```

```
      PROGRAM REGRE(INPUT,OUTPUT,TAPE5=INPUT,TAPE6=OUTPUT,TAPE7)
      DIMENSION X(50),CB(50,1),Y(50),CT(50,4),Z(50),CBBAR(1),
     1          CTBAR(4),SIGMAB(1,1),SIGMAT(4,4),RR(50,2),
     1          DELTAB(1),DELTAT(4),GAMMA(1),BETA(4),
     1          A(50),B(50),SIGMABI(1,1),SIGMATI(4,4)
      NTCONT=4
      NBCONT=1
      ISAMPSZ=50
      ZVAL=1.645
      NEXPCT=0
      NUMEXP=1
      RTRUE=1.0
      BIASR=0.0
      BIASRH=0.0
      BIASRHT=0.0
      BIASRHB=0.0
      VARR=0.0
      VARRHAT=0.0
5     DO 20 I=1,ISAMPSZ
        READ(5,10) X(I),Y(I),CB(I,1),CT(I,1)
10      FORMAT(2F10.4,2(10X,F10.4))
20    CONTINUE
C
C  PERFORM BOTTOM REGRESSION
C
      CALL MEAN(XBAR,CBBAR,ISAMPSZ,NBCONT,X,CB)
      CALL SIGMA(CB,CBBAR,ISAMPSZ,NBCONT,SIGMAB)
      CALL DELTA(X,CB,XBAR,CBBAR,ISAMPSZ,NBCONT,DELTAB)
      CALL REGRESS(GAMMA,SIGMAB,SIGMABI,DELTAB,NBCONT)
C
C  DETERMINE DENOMINATOR
C
      BBAR=0.0
      DO 30 I=1,ISAMPSZ
        SUM=0.0
        DO 25 J=1,NBCONT
25          SUM=SUM+GAMMA(J)*CB(I,J)
        B(I)=X(I)-SUM
        BBAR=BBAR+B(I)
30    CONTINUE
      BBAR=BBAR/ISAMPSZ
C
C  PERFORM TOP REGRESSION
C
      YBAR=0.0
      DO 40 I=1,ISAMPSZ
40        YBAR=YBAR+Y(I)
      YBAR=YBAR/ISAMPSZ
      R=YBAR/XBAR
      ZBAR=YBAR-R*BBAR
      DO 50 I=1,ISAMPSZ
50      Z(I)=Y(I)-R*B(I)
      DO 70 I=1,NTCONT
        CTBAR(I)=0.0
        DO 60 J=1,ISAMPSZ
60          CTBAR(I)=CTBAR(I)+CT(J,I)
        CTBAR(I)=CTBAR(I)/ISAMPSZ
70    CONTINUE
      CALL SIGMA(CT,CTBAR,ISAMPSZ,NTCONT,SIGMAT)
      CALL DELTA(Z,CT,ZBAR,CTBAR,ISAMPSZ,NTCONT,DELTAT)
      CALL REGRESS(BETA,SIGMAT,SIGMATI,DELTAT,NTCONT)
C
C  DETERMINE NUMERATOR
```

```
C
      ABAR=0.0
      DO 80 I=1,ISAMPSZ
         SUM=0.0
         DO 75 J=1,NTCONT
75          SUM=SUM+BETA(J)*CT(I,J)
         A(I)=Y(I)-SUM
         ABAR=ABAR+A(I)
80    CONTINUE
      ABAR=ABAR/ISAMPSZ
C
C GET POINT ESTIMATE
C
      RHAT=ABAR/BBAR
      RHATB=YBAR/BBAR
      RHATT=ABAR/XBAR
C
C  GET CONFIDENCE INTERVAL
C
      SUM1=0.0
      SUM2=0.0
      DO 90 I=1,NTCONT
90       SUM1=SUM1+BETA(I)*CTBAR(I)
      DO 100 I=1,NBCONT
100      SUM2=SUM2+GAMMA(I)*CBBAR(I)
      SUMTRM=SUM1-RHAT*SUM2
      VAR=0.0
      VAR1=0.0
      DO 110 I=1,ISAMPSZ
        VAR=VAR+(A(I)-RHAT*B(I)+SUMTRM)**2
        VAR1=VAR1+(Y(I)-R*X(I))**2
110   CONTINUE
      AN=ISAMPSZ
      VAR=VAR/(AN*BBAR**2*(AN-1.0))
      VAR1=VAR1/(AN*XBAR**2*(AN-1.0))
      ZVAL1=ZVAL*SQRT(VAR)
      ZVAL2=ZVAL*SQRT(VAR1)
      CILOW=RHAT-ZVAL1
      CIHIGH=RHAT+ZVAL1
      CILOW1=R-ZVAL2
      CIHIGH1=R+ZVAL2
      BR=R-RTRUE
      BRHAT=RHAT-RTRUE
      BRHATB=RHATB-RTRUE
      BRHATT=RHATT-RTRUE
      WRITE(7,120) RHAT,CILOW,CIHIGH,VAR,R,CILOW1,CIHIGH1,VAR1
120   FORMAT(1X,8F8.5)
      BIASR=BIASR+BR
      BIASRH=BIASRH+BRHAT
      BIASRHB=BIASRHB+BRHATB
      BIASRHT=BIASRHT+BRHATT
      VARR=VARR+VAR1
      VARRHAT=VARRHAT+VAR
      NEXPCT=NEXPCT+1
      RR(NEXPCT,1)=RHAT
      RR(NEXPCT,2)=R
      IF(NEXPCT.LT.NUMEXP) GO TO 5
      AN=NUMEXP
      BIASR=BIASR/AN
      BIASRH=BIASRH/AN
      BIASRHT=BIASRHT/AN
      BIASRHB=BIASRHB/AN
      RM1=0.0
```

```
      RM2=0.0
      VAR1=VARR/AN
      VAR2=VARRHAT/AN
      VARRED=(VAR1-VAR2)/VAR1
      WRITE(7,140) BIASR,BIASRH,BIASRHB,BIASRHT,VARRED
140   FORMAT(1X,*BIAS IN CLASSICAL=*,F10.4,/,
     1       1X,*BIAS IN CONTROLLED TOP AND BOTTOM=*,F10.4,/,
     1       1X,*BIAS IN CONTROLLED BOTTOM=*,F10.4,/,
     1       1X,*BIAS IN CONTROLLED TOP=*,F10.4,/,
     1       1X,*VAR REDUCTION IN CONTROLLED TOP AND BOTTOM*,F10.4)
      STOP
      END
      SUBROUTINE DELTA(X,C,XBAR,CBAR,N,NP,DELTAMT)
      DIMENSION X(N),C(N,NP),CBAR(NP),DELTAMT(NP)
      AN=N-1
      DO 20 I=1,NP
        SUM=0.0
        DO 10 J=1,N
10        SUM=SUM+(C(J,I)-CBAR(I))*(X(J)-XBAR)
        DELTAMT(I)=SUM/AN
20    CONTINUE
      RETURN
      END
      SUBROUTINE REGRESS(BETA,SIGMAMT,SIGMAI,DELTAMT,NP)
      DIMENSION BETA(NP),SIGMAMT(NP,NP),DELTAMT(NP),SIGMAI(NP,NP)
      CALL MATINV(SIGMAMT,NP,SIGMAI)
      DO 10 I=1,NP
        BETA(I)=0.0
        DO 20 J=1,NP
20        BETA(I)=BETA(I)+SIGMAI(I,J)*DELTAMT(J)
10    CONTINUE
      RETURN
      END
      SUBROUTINE SIGMA(C,CBAR,N,NP,SIGMAMT)
      DIMENSION C(N,NP),CBAR(NP),SIGMAMT(NP,NP)
      AN=N-1
      DO 30 I=1,NP
        DO 20 J=1,NP
          SUM=0.0
          DO 10 K=1,N
10            SUM=SUM+(C(K,I)-CBAR(I))*(C(K,J)-CBAR(J))
          SIGMAMT(I,J)=SUM/AN
20      CONTINUE
30    CONTINUE
      RETURN
      END
      SUBROUTINE MEAN(XBAR,CBAR,N,NP,X,C)
      DIMENSION CBAR(NP),X(N),C(N,NP)
      AN=N
      XBAR=0.0
      DO 10 I=1,NP
10      CBAR(I)=0.0
      DO 30 J=1,N
        XBAR=XBAR+X(J)
        DO 20 I=1,NP
20        CBAR(I)=CBAR(I)+C(J,I)
30    CONTINUE
      XBAR=XBAR/AN
      DO 40 I=1,NP
40      CBAR(I)=CBAR(I)/AN
      RETURN
      END
      SUBROUTINE MATINV(AMT,N,AINV)
```

```
      DIMENSION AMT(N,N),AINV(N,N)
      II=N
      IF(II.GT.1) GO TO 5
      AINV(1,1)=1./AMT(1,1)
      RETURN
5     DO 15 I=1,II
      DO 10 J=1,II
10    AINV(I,J)=0.0
      AINV(I,I)=1.0
15    CONTINUE
      DO 35 I=1,II
      AX=AMT(I,I)
      DO 20 J=1,II
      AMT(I,J)=AMT(I,J)/AX
      AINV(I,J)=AINV(I,J)/AX
20    CONTINUE
      DO 30 K=1,II
      IF (I .EQ. K) GO TO 30
      AX=-1.*AMT(K,I)
      DO 25 J=1,II
      AMT(K,J)=AMT(I,J)*AX+AMT(K,J)
      AINV(K,J)=AINV(I,J)*AX+AINV(K,J)
25    CONTINUE
30    CONTINUE
35    CONTINUE
      RETURN
      END
```

BIBLIOGRAPHY

ANDE74. Anderson, V. L. and R. A. McLean
Design of Experiments: A Realistic Approach, Marcel Dekker, New York, 1974.

BICK77. Bickell, P. J. and K. A. Doksum
Mathematical Statistics: Basic Ideas and Selected Topics, Holden-Day, San Francisco, 1977.

BUZE73. Buzen, J. P.
"Computational Algorithms for Closed Queueing Networks with Exponential Servers," Communications of the ACM, Vol. 16, No. 9 (September, 1973), pp. 527-531.

CARS78. Carson, J. S. II
Variance Reduction Techniques for Simulated Queueing Processes, Ph.D. Dissertation, University of Wisconsin-Madison, 1978.

CARS80. Carson, J. S. and A. M. Law
"Conservation Equations and Variance Reduction in Queueing Simulations," Operations Research, Vol. 28 (1980), pp. 535-546.

CHEN78. Cheng, R. C. H.
"Analysis of Simulation Experiments Under Normality Assumptions," Journal of the Operational Research Society, Vol. 29, No. 5 (1978), pp. 493-497.

CHUN74. Chung, K. L.
A Course in Probability Theory, 2d ed., Academic Press, New York, 1974.

COCH77. Cochran, W. G.
Sampling Techniques, Wiley, New York, 1977.

COX78. Cox, D. R. and N. J. H. Small
"Testing Multivariate Normality," Biometrika, Vol. 65 (1978), pp. 263-272.

CRAN7(I). Crane, M. A. and D. L. Iglehart
"Simulating Stable Stochastic Systems, I: General Multi-server Queues," J. Assoc. Comput. Mach., Vol. 21 (1974), pp. 103-113.

CRAN74(II). Crane, M. A. and D. L. Iglehart
"Simulating Stable Stochastic Systems, II: Markov Chains," J. Assoc. Comput. Mach., Vol 21 (1974), pp. 114-123.

CRAN75(I). Crane, M. A. and D. L. Iglehart
"Simulating Stable Stochastic Systems, III: Regenerative Processes and Discrete-Event Simulations," Operations Research, Vol. 23 (1975), pp. 33-45.

CRAN75(II). Crane, M. A. and D. L. Iglehart
"Simulating Stable Stochastic Systems, IV: Approximation Techniques," Management Science, Vol. 21, No. 11 (July, 1975), pp. 1215-1224.

CRAN77. Crane, M. A. and A. J. Lemoine
An Introduction to the Regenerative Method for Simulation Analysis, Springer-Verlag, Berlin, 1977.

DALE68. Daley, D. J.
"The Serial Correlation Coefficients of Waiting Times in a Stationary Single Server Queue," Journal of the Australian Mathematical Society, Vol. 8 (1968), pp. 683-699.

DRAP66. Draper, N. R. and H. Smith
Applied Regression Analysis, Wiley, New York, 1966.

EFRO79. Efron, B.
"Bootstrap Methods: Another Look at the Jackknife," The Annals of Statistics, Vol. 7, No. 1 (1979), pp. 1-26.

FIEL32. Fieller, E. C.
"The Distribution of the Index in a Normal Bivariate Population," Biometrika, Vol. 24 (1932), pp. 428-440.

FISH78. Fishman, G. S.
Principles of Discrete Event Simulation, Wiley, New York, 1978.

GARM71. Garman, M. B.
"Variance Reduction in Large Scale Computer Simulations," Working Paper No. CP-338, Center for Research in Management Science, University of California, 1971.

GOOD58. Goodman, L. A. and H. O. Hartley
"The Precision of Unbiased Ratio-Type Estimators," JASA, Vol. 53 (1958), pp. 491-508.

GORD67. Gordon, W. J. and G. F. Newell
"Closed Queueing Systems with Exponential Servers," Operations Research, Vol. 15 (1967), pp. 254-265.

GUNT80. Gunther, F. L. and R. W. Wolff
"The Almost Regnerative Method for Stochastic System Simulations," Operations Research, Vol. 28 (1980), pp. 375-386.

HAMM64. Hammersley, J. M. and D. C. Handscomb
Monte Carlo Methods, Methuen, London, 1964.

HANS53. Hansen, M. H., W. N. Hurwitz, and W. G. Madow
Sample Survey Methods and Theory: Volume I, Methods and Applications, Wiley, New York, 1953.

HAWK81. Hawkins, D. M.
"A New Test for Multivariate Normality and Homoscedasticity," Technometrics, Vol. 23, No. 1 (Feb. 1981), pp. 105-110.

HEID78. Heidelberger, P. and D. L. Iglehart
"Comparing Stochastic Systems Using Regenerative Simulation with Common Random Numbers," Technical Report No. 47, Department of Operations Research, Stanford University, May, 1978.

HEID80. Heidelberger, P.
"Variance Reduction Techniques for the Simulation of Markov Processes I: Multiple Estimates," IBM J. Res. Develop., Vol. 24, No. 5 (1980), pp. 570-581.

HENS77. Hensler, G. L., K. G. Mehrotra, and J. E. Michalek
"A Goodness of Fit Test for Multivariate Normality," Commun. Statist.-Theor. Meth., Vol. A6 (1977), pp. 33-41.

HILL80. Hillier, F. S. and G. J. Lieberman
Introduction to Operations Research, Holden-Day, Inc., San Francisco, 1980.

IGLE75. Iglehart, D. L.
"Simulating Stable Stochastic Systems, V: Comparison of Ratio Estimators," Naval Research Logistics Quarterly, Vol. 22 (1975), pp. 553-565.

IGLE76. Iglehart, D. L.
"Simulating Stable Stochastic Systems, VI: Quantile Estimation," Journal of the ACM, Vol. 23, No. 2 (1976), pp. 347-360.

IGLE79. Iglehard, D. L. and P. A. W. Lewis
"Regenerative Simulation with Internal Controls," Journal of the ACM, Vol. 26, No. 2 (April, 1979), pp. 271-282.

JEWE67. Jewell, W. S.
"A Simple Proof of: L - W," Operations Research, Vol. 15 (1967), pp. 1109-1116.

JOHN49. Johnson, N. L.
"Systems of Frequency Curves Generated by Methods of Translation," Biometrika, Vol. 36 (1949), pp. 149-176.

JOHN65. Johnson, N. L.
"Tables to Facilitate Fitting S_u Frequency Curves", Biometrika, Vol. 52 (1965), pp. 547-558.

KAHN53. Kahn, H. and A. W. Marshall
"Methods of Reducing Sample Size in Monte Carlo Computations," Operations Research, Vol. 1 (1953), pp. 263-278.

KISH65. Kish, L.
Survey Sampling, Wiley, New York, 1965.

AD-A119 740 AIR FORCE INST OF TECH WRIGHT-PATTERSON AFB OH F/G 12/1
REGENERATIVE SIMULATION USING INTERNAL CONTROLS.(U)
1982 J D EAKLE-CARDINAL
UNCLASSIFIED AFIT/CI/NR/82-53D NL

KLEIL74. Kleijnen, J. P. C.
Statistical Techniques in Simulation, Marcel Dekker, New York, 1974.

LAVE77(I). Lavenberg, S. S., T. L. Moeller, and C. H. Sauer
"Concomitant Control Variables Applied to the Regenerative Simulation of Queueing Systems," Research Report RC6413, IBM Corp., February, 1977.

LAVE77(II). Lavenberg, S. S., T. L. Moeller, and P. D. Welch
"Control Variables Applied to the Simulation of Queueing Models of Computer Systems," Research Report RC6630, IBM Corp., May, 1977.

LAVE77(III). Lavenberg, S. S., and C. H. Sauer
"Sequential Stopping Rules for the Regenerative Method of Simulation," Research Report RC6412, IBM Corp., February, 1977.

LAVE78. Lavenberg, S. S., T. L. Moeller, and P. D. Welch
"Statistical Results on Multiple Control Variables with Application to Variance Reduction in Queueing Network Simulation," Research Report RC7423, IBM Corp., November, 1978.

LAVE79. Lavenberg, S. S., T. L. Moeleer, and C. H. Sauer
"Concomitant Control Variables Applied to the Regenerative Analysis of Queueing Systems," Operations Research, Vol. 27, No. 1 (January - February, 1979), pp. 134-160.

LAVE81. Lavenberg, S. S., and P. D. Welch
"A Perspective of the Use of Control Variables to Increase the Efficiency of Monte Carlo Simulations," Management Science, Vol. 27, No. 3 (March 1981), pp. 322-335.

LAW77. Law, A. M.
"Confidence Intervals in Discrete Event Simulation: A Comparison of Replication and Batch Means," Naval Research Logistics Quarterly, Vol. 24, No. 4 (December, 1977), pp. 667-678.

LAW82. Law, A. M. and W. D. Kelton
Simulation Modeling and Analysis, McGraw-Hill, New York, 1982.

LITT61. Little, J. D. C.
"A Proof for the Queueing Formula L = W," Operations Research, Vol. 9, No. 3 (1961), pp. 383-387.

MALK73. Malkovich, J. F. and A. A. Afifi
"On Tests for Multivariate Normality", Journal of the American Statistical Association, Vol. 68, No. 341 (March 1973), pp. 176-179.

MCGR74. McGrath, E. J. and D. C. Irving.
"Application of Variance Reduction to Large Scale Simulation Problems," Comput. & Ops. Res., Vol. 1 (1974), pp. 283-311.

MILL64. Miller, R. G.
"A Trustworthy Jackknife," Ann. Math. Stat., Vol. 35 (1964), pp. 1594-1604.

MILL74(I). Miller, R. G.
"The Jackknife--A Review," Biometrika, Vol. 61, No. 1 (1974), pp. 1-15.

MILL74(II). Miller, R. G.
"An Unbalanced Jackknife," Annals of Statistics, Vol. 2, No. 5 (1974), pp. 880-891.

MORR76. Morrison, D. F.
Multivariate Statistical Methods, 2d ed., McGraw-Hill, New York, 1976.

MOY65. Moy, W. A.
Sampling Techniques for Increasing the Efficiency of Simulations of Queueing Systems, Ph.D. Dissertation, Northwestern University, August, 1965.

NEUT73. Neuts, M. F.
Probability, Allyn and Bacon, Boston, 1973.

PRES72. Press, S. J.
Applied Multivariate Analysis, Holt, Rinehart, and Winston New York, 1972.

PRIT66(I). Pritsker, A. A. B.
"GERT: Graphical Evaluation and Review Technique," RAND Corporation Memorandum RM-4973-NASA, April, 1966.

PRIT66(II). Pritsker, A. A. B., and W. W. Happ
"GERT: Graphical Evaluation and Review Technique, Part I, Fundamentals," Journal of Industrial Engineering, Vol. 17, No. 5 (May, 1966), pp. 267-274.

PIRT66(III). Pritsker, A. A. B. and G. E. Whitehouse
"GERT: Graphical Evaluation and Review Technique, Part II, Probabilistic and Industrial Engineering Applications," Journal of Industrial Engineering, Vol. 17, No. 6 (June, 1966), pp. 293-301.

PRIT79. Pritsker, A. A. B. and C. D. Pegden
Introduction to Simulation and SLAM, Wiley, New York, 1979.

RAJ68. Raj, Des
Sampling Theory, McGraw-Hill, New York, 1968.

RAO69. Rao, J. N. K.
"Ratio and Regression Estimators," in New Developments in Survey Sampling, N. L. Johnson and H. Smith (Eds.), Wiley, New York, 1969.

RAO73. Rao, C. R.
Linear Statistical Inference and Its Applications, 2d ed., John Wiley and SOns, New York, 1973.

REY78. Rey, W. J. J.
Robust Statistical Methods, Springer-Verlag, Berline, 1978.

SCHR79. Schruben, L. W.
"A Coverage Function for Interval Estimators," Technical Report No. 410, School of Operations Research and Industrial Engineering, College of Engineering, Cornell University, Ithaca, N. Y., Feb. 1979.

SHAP65. Shapiro, S. S. and M. B. Wilk
"An Analysis of Variance Test for Normality (Complete Samples)," Biometrika, Vol. 52 (December, 1965), pp. 591-661.

SHAP68. Shapiro, S. S., M. B. Wilk, and H. J. Chen
A Comparative Study of Various Tests for Normality," Journal of the American Statistical Association, Vol. 63 (December, 1968), pp. 1343-1372.

SHAP72. Shapiro, S. S. and R. S. Francia
"An Approximate Analysis of Variance Test for Normality," Journal of the American Statistical Association, Vol. 67, No. 337 (March, 1972), pp. 215-216.

SMAL80. Small, N. J. H.
"Marginal Skewness and Kurtosis in Testing Multivariate Normality," Appl. Statist., Vol. 25, No. 1 (1980), pp. 85-87.

SOM73. Som, R. K.
A Manual of Sampling Techniques, Heinemann, London, 1973.

SOLB78(I). Solberg, J. J.
"CAN-Q User's Guide," School of Industrial Engineering, Purdue University, July, 1978.

SOLB78(II). Solberg, J. J.
"A Mathematical Model of Computerized Manufacturing Systems," in Production and Industrial Systems, R. Muramatsu and N. A. Dudley (Eds.), Taylor & Francis, London, 1978, pp. 1265-1275.

SOLB80. Solberg, J. J.
"The Optimal Planning of Computerized Manufacturing Systems," School of Industrial Engineering, Purdue University, July 1980.

STID74. Stidham, S.
"A Last Word on L - W," Operations Research, Vol. 22 (1974), pp. 417-421.

WAGN69. Wagner, H.
Principles of Operations Research, Prentice-Hall, Englewood Cliffs, N. J., 1969.

WEIS75. Weisberg, S. and C. Bingham
"An Approximate Analysis of Variance Test for Non-Normality Suitable for Machine Calculation," Technometrics, Vol. 17, No. 1 (February, 1975), pp. 133-134.

WELC56. Welch, B. L.
"On Linear Combinations of Several Variances," Journal of the American Statistical Association, Vol. 51 (1956), pp. 132-148.

WHIT69. Whitehouse, G. E. and A. A. B. Pritsker
"GERT: Part III--Further Statistical Results; Counters, Renewal Times, and Correlations," AIIE Transactions, Vol. 1 (1969), pp. 45-50.

WILS78. Wilson, J. R. and A. Alan B. Pritsker
"Evaluation of Startup Policies in Simulation Experiments," Simulation, Vol. 31, No. 3 (September, 1978), pp. 79-89.

WILS80. Wilson, J. R.
Variance Reduction Techniques for the Simulation of Queueing Networks, Ph.D. Dissertation, Purdue University, December, 1979.

VITA

Jan Denise Eakle was born in Weston, West Virginia, the daughter of Burke E. and Jean N. Eakle. After completing her work at Arthur W. Radford High School, Honolulu, Hawaii, in 1971, she entered Baylor University, Waco, Texas. She received the degree of Bachelor of Science with a major in mathematics in 1975. In June, 1975, she entered the Graduate School of Baylor University. In August, 1976, she was awarded the degree of Master of Science in mathematics. In September, 1976, she entered active duty in the United States Air Force. She was assigned to the Manpower and Personnel Center, Randolph Air Force Base, Texas. In August, 1979, she was assigned to the Graduate School of The University of Texas at Austin. She was married to Lawrence David Cardinal in 1981.

Permanent Address: 12809 Prestwick Drive
Fort Washington, MD 20022

This dissertation was typed by Master Typist, Inc.

EN

DAT

FILM