RADC-TR-81-214
Phase Report
August 1981

AD A108780

THE RESPONSE OF A TWO-WIRE TRANSMISSION LINE TO INCIDENT FIELD AND VOLTAGE EXCITATION, INCLUDING THE EFFECTS OF HIGHER ORDER MODES

Syracuse University

Yehuda Leviatan
Arlon T. Adams

APPROVED FOR PUBLIC RELEASE; DISTRIBUTION UNLIMITED

DTIC FILE COPY

DTIC
ELECTE
DEC 22 1981
A

ROME AIR DEVELOPMENT CENTER
Air Force Systems Command
Griffiss Air Force Base, New York 13441

81 12 22 127

This report has been reviewed by the RADC Public Affairs Office (PA) and is releasable to the National Technical Information Service (NTIS). At NTIS it will be releasable to the general public, including foreign nations.

RADC-TR-81-214 has been reviewed and is approved for publication.

APPROVED: Roy F. Stratton

ROY F. STRATTON
Project Engineer

APPROVED: David C. Luke

DAVID C. LUKE, Colonel, USAF
Chief, Reliability and Compatibility Division

FOR THE COMMANDER: John P. Huss

JOHN P. HUSS
Acting Chief, Plans Office

If your address has changed or if you wish to be removed from the RADC mailing list, or if the addressee is no longer employed by your organization, please notify RADC (RBCT) Griffiss AFB NY 13441. This will assist us in maintaining a current mailing list.

Do not return copies of this report unless contractual obligations or notices on a specific document requires that it be returned.

MISSION
of
Rome Air Development Center

RADC plans and executes research, development, test and selected acquisition programs in support of Command, Control Communications and Intelligence (C^3I) activities. Technical and engineering support within areas of technical competence is provided to ESD Program Offices (POs) and other ESD elements. The principal technical mission areas are communications, electromagnetic guidance and control, surveillance of ground and aerospace objects, intelligence data collection and handling, information system technology, ionospheric propagation, solid state sciences, microwave physics and electronic reliability, maintainability and compatibility.

UNCLASSIFIED

SECURITY CLASSIFICATION OF THIS PAGE (When Data Entered)

REPORT DOCUMENTATION PAGE		READ INSTRUCTIONS BEFORE COMPLETING FORM
1. REPORT NUMBER RADC-TR-81-214	2. GOVT ACCESSION NO. AD-108 780	3. RECIPIENT'S CATALOG NUMBER
4. TITLE (and Subtitle) THE RESPONSE OF A TWO-WIRE TRANSMISSION LINE TO INCIDENT FIELD AND VOLTAGE EXCITATION, INCLUDING THE EFFECTS OF HIGHER ORDER MODES		5. TYPE OF REPORT & PERIOD COVERED Phase Report 1 Oct 79 - 30 Sep 80
		6. PERFORMING ORG. REPORT NUMBER N/A
7. AUTHOR(s) Yedhuda Leviatan Arlon T. Adams		8. CONTRACT OR GRANT NUMBER(s) F30602-79-C-0011
9. PERFORMING ORGANIZATION NAME AND ADDRESS Syracuse University Dept of Electrical and Computer Engineering Syracuse NY 13210		10. PROGRAM ELEMENT, PROJECT, TASK AREA & WORK UNIT NUMBERS 62702F 23380317
11. CONTROLLING OFFICE NAME AND ADDRESS Rome Air Development Center (RBCT) Griffiss AFB NY 13441		12. REPORT DATE August 1981
		13. NUMBER OF PAGES 84
14. MONITORING AGENCY NAME & ADDRESS(if different from Controlling Office) Same		15. SECURITY CLASS. (of this report) UNCLASSIFIED
		15a. DECLASSIFICATION/DOWNGRADING SCHEDULE N/A

16. DISTRIBUTION STATEMENT (of this Report)

Approved for public release; distribution unlimited.

17. DISTRIBUTION STATEMENT (of the abstract entered in Block 20, if different from Report)

Same

18. SUPPLEMENTARY NOTES

RADC Project Engineer: Roy F. Stratton (RBCT)

19. KEY WORDS (Continue on reverse side if necessary and identify by block number)

Transmission Lines
Higher Order Modes
Computer Programs

20. ABSTRACT (Continue on reverse side if necessary and identify by block number)

The main objective of this report has been to derive the induced current on a two-wire transmission line due to incident field excitation. Special attention has been paid to the case of voltage source excitation, where the current may be given, at least approximately, using the so-called leaky-wave concept. The influence of the electrical dimensions of the structure on the currents and the relative importance of the higher modes is examined by numerical examples.

DD FORM 1 JAN 73 1473 EDITION OF 1 NOV 65 IS OBSOLETE

UNCLASSIFIED

SECURITY CLASSIFICATION OF THIS PAGE (When Data Entered)

10071

Table of Contents

		Page
I.	Introduction	1
II.	Formulation of the Problem	3
III.	Plane Wave Excitation	8
IV.	Solution of the Superposition Integral in terms of the TEM Mode and the Leaky Modes	12
V.	Voltage Source Excitation	17
VI.	The Modal Solution of the Problem Using Generalized Network Method	21
VII.	Results and Conclusions	24
Appendix A.		
A1.	The Contribution of a Leaky Pole	40
A2.	The Contribution of the Branch Point	43
A3.	The Contribution of the Branch Cut	45
Appendix B.	The Method for Finding the Roots of Eq. (38)	47
Appendix C.	Program Listings and Output Samples	49
References		81

Accession For
NTIS GRA&I ☑
DTIC TAB ☐
Unannounced ☐
Justification
By
Distribution/
Availability Codes
Avail and/or
Dist Special
A

List of Illustrations

		Page
Fig. 1	The two-wire geometry	4
Fig. 2	A plane wave incident upon the two-wire structure	9
Fig. 3	Illustration of the contours ABCD and ABC'D	13
Fig. 4	Deforming the contour to cross the leaky poles	14
Fig. 5	Voltage-source excitation	18
Fig. 6	A superposition of symmetric and antisymmetric excitations equivalent to that of Fig. 5 (a) symmetric excitation (b) antisymmetric excitation	19
Fig. 7	The currents induced on the wires due to plane wave excitation, vs. the normalized distance between the wires ($d/a = 10$, $d/\lambda < 1.$)	25
Fig. 8	The currents induced on the wires due to plane wave excitation, vs. the normalized distance between the wires ($d/a = 10$, $d/\lambda > 1.$)	26
Fig. 9	The currents induced on the wires due to plane wave excitation vs. the ratio d/a, ($d/\lambda = 2.5$)	27
Fig. 10	The normalized attenuation constants of the two lowest even and odd modes on the wires vs. the normalized distance between the wires ($d/a = 10$, $d/\lambda < 1$)	28
Fig. 11	The normalized attenuation constants of the two lowest even and odd modes on the wires vs. the normalized distance between the wires ($d/a = 10$, $d/\lambda > 1$)	29
Fig. 12	The normalized attenuation constants of the two lowest even and odd modes on the wires vs. the normalized distance between the wires, ($d/a = 100$ and $d/\lambda < 1$)	30
Fig. 13	The normalized attenuation constants of the two lowest even and odd modes on the wires vs. the normalized distance between the wires, ($d/a = 100$ and $d/\lambda > 1$)	31

Page

Fig. 14 The normalized attenuation constants of the lowest even and odd modes on the wires vs. the ratio d/a, ($d/\lambda = 2.0$)..... 32

Fig. 15 The lowest even-mode current at z = 0 normalized to the TEM current vs. the ratio d/a ($d/\lambda = 2.0$)..... 34

Fig. 16 The lowest odd-mode current at z = 0 normalized to the TEM current vs. the ratio d/a ($d/\lambda = 2.0$)..... 35

Fig. 17 The lowest even-mode current at z = 0 normalized to the TEM current vs. the normalized distance the wires (d/a = 10, 100; $d/\lambda < 1$)..... 36

Fig. 18 The lowest even-mode current at z = 0 normalized to the TEM current vs. the normalized distance the wires (d/a = 10, 100; $d/\lambda > 1$)..... 37

Fig. 19 The lowest odd-mode current at z = 0 normalized to the TEM current vs. the normalized distance between the wires (d/a = 10, 100; $d/\lambda < 1$)..... 38

Fig 20. The lowest odd-mode current at z = 0 normalized to the TEM current vs. the normalized distance between the wires (d/a = 10, 100; $d/\lambda > 1$)..... 39

Fig. A1 Illustration of the contours in the k_z Plane..... 41

I. Introduction

In this report a study has been made of the induced currents on a two-wire (parallel-cylinder) transmission line due to incident field excitation. The basic assumptions are that the wires are perfectly conducting, parallel, infinitely long and that their radii are very small compared to the wavelength of the excitation. Thus, the induced currents along the wires are oriented in the direction of the cylinder axis of each wire, they are independent of the azimuthal angle around each wire, and hence we may replace each wire by an equivalent filament. Boundary conditions are applied at the wire surface so that wire thickness is taken into account. Previous work related to this problem included Schelkunoff's Laplace transform solution [1] and Marin's transient solution [2] of the two-wire problem.

The formulation of the problem is effected by using the spectral concept. The excitation field has been resolved into its Fourier (spatial) components and the induced current has been expressed in terms of a superposition integral. First, the case of plane wave excitation has been treated. This led to a straight-forward solution of the integral representation and a simple solution for the induced currents. Using the results, the variations of the induced currents have been shown as a function of the distance between the wires (while the ratio of the distance between the wires to the radius of the wire has been kept fixed). Also, the variation of the currents has been shown as a function of the radius of the wire (while the distance between the wires has been kept fixed).

Special attention has been paid to the case of voltage source excitation. In this case, by deforming the contour of integration in the induced current formulation and applying Cauchy's theorem, one

obtains the solution in terms of the so-called leaky modes, the TEM mode, and a continuous spectrum. The leaky modes are not proper solutions of Maxwell's equation and, in contrast to the discrete eigenmodes, which exist in regions of finite extent bounded by impermeable walls, do not possess orthogonality and completeness properties, and therefore must be supplemented by a continuous spectrum of characteristic modes to permit the representation of an arbitrary function. Nevertheless, despite their physically unacceptable behavior in the entire domain, they can be employed to obtain a convergent representation of the field solution in certain regions.

The preceding modal solution may be obtained via a straight-forward approach using the general network parameters of the method of moments [3]. Solving for the zeros of the total impedance of the system leads as expected to the same equation that determines the poles of the integrand in the integral solution for the induced currents.

The influence of the electrical dimensions of the structure on the induced currents and the relative importance of the higher modes are examined by concrete numerical examples. By looking at the results, it can be readily seen, as one can expect, that the attenuation constants of the higher modes decrease as the distance between the wires is increased. In contrast, the attenuation constants increase for fixed distance between the wires as the radius is decreased. The magnitudes of the TEM and the higher order modal currents have also been compared at a fixed point along the z axis. As one proceeds along the z axis, the higher order modes are attenuated exponentially, while the TEM remains constant.

These studies apply particularly to problems involving high frequency excitation, such that the wire separation is comparable to or larger than a wavelength, in which case the usual TEM mode analysis is inadequate.

II. Formulation of the Problem

Consider the problem of two perfectly conducting, parallel, thin, infinitely long wires with radii a separated by a distance d. The z-directed induced currents on the wires are due to an incident field excitation which may be either symmetric or antisymmetric as shown in Figure 1. The symmetric excitation (which consists of two plane waves) yields a magnetic wall at $y = \frac{d}{2}$. Similarly, the antisymmetric excitation yields an electric wall at $y = \frac{d}{2}$. An arbitrary plane wave can be represented in terms of a sum of symmetric and antisymmetric excitations. We assume that $\frac{a}{d} << 1$ and $\frac{a}{\lambda} << 1$, where λ is the wavelength. Thus, the induced current is along the cylinder axis of each wire, and is independent of the azimuthal angle around each wire.

The magnetic vector potential for this problem is given by (for $\exp(j\omega t)$ time convention)

$$\underline{A}\,(x,y,z) = \hat{z}\Psi(x,y,z) \tag{1}$$

where

$$\Psi_{\pm}(x,y,z) = \int_{-\infty}^{\infty} I_{\pm}(z') \left[\frac{e^{-jk\sqrt{x^2 + y^2 + (z - z')^2}}}{4\pi\sqrt{x^2 + y^2 + (z - z')^2}} \pm \frac{e^{-jk\sqrt{x^2 + (y - d)^2 + (z - z')^2}}}{4\pi\sqrt{x^2 + (y - d)^2 + (z - z')^2}} \right] dz' \tag{2}$$

I(z) denotes the current along the wire, x,y,z, are the coordinates of a field point in a rectangular coordinate system, z' is the coordinate of a source point, k is the wavenumber, and the upper and lower signs are for symmetric and antisymmetric excitations, respectively.

The Fourier transform of $\Psi(x,y,z)$ with respect to the cylinder

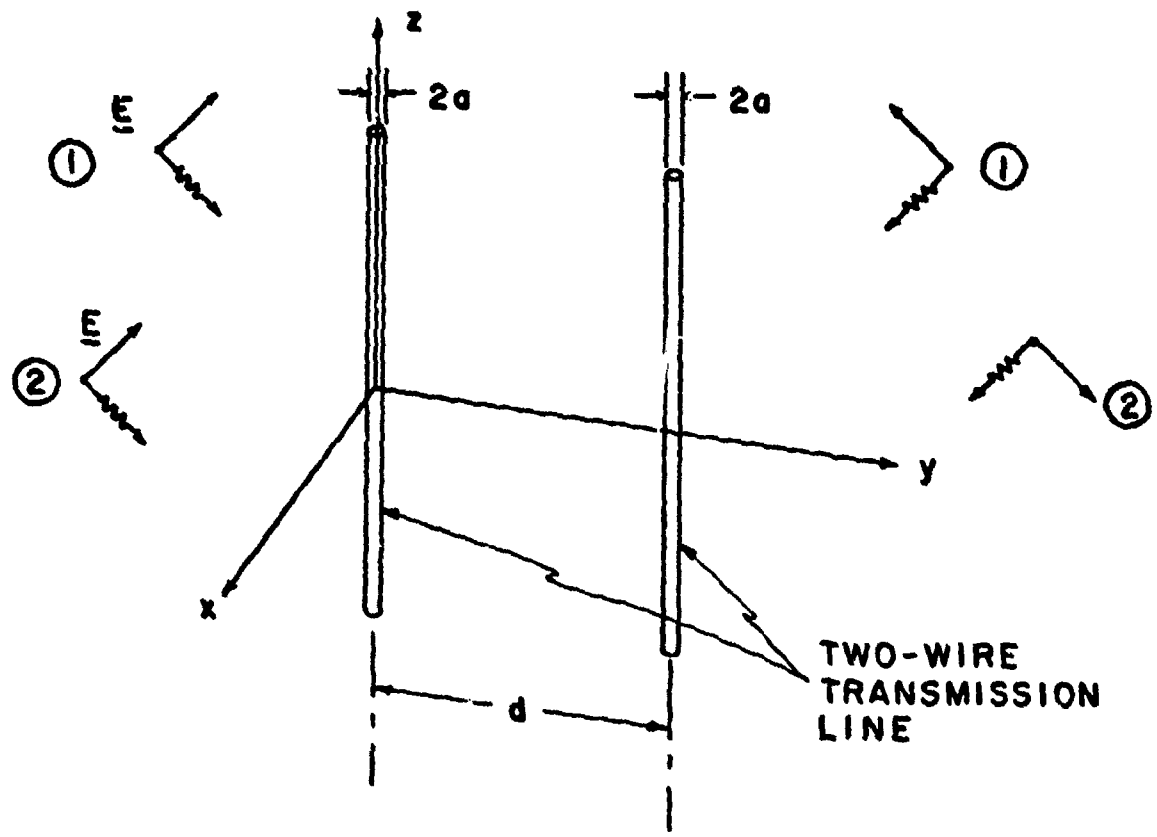

1 SYMMETRIC EXCITATION

2 ANTISYMMETRIC

Fig. 1 The two-wire geometry.

axis z is,

$$\overline{\Psi}_{\pm}(x,y,k_z) = \int_{-\infty}^{\infty} \Psi_{\pm}(x,y,z)e^{-jk_z z}\, dz \tag{3}$$

and it may be given by,

$$\overline{\Psi}_{\pm}(x,y,k_z) = \frac{1}{4j}\, \overline{I}_{\pm}(k_z)\ [H_o^{(2)}(k_\rho \rho_1) \pm H_o^{(2)}(k_\rho \rho_2)] \tag{4}$$

where $\overline{I}_{\pm}(k_z)$ is the transform of $I_{\pm}(z)$; k_ρ the radial wavenumber is defined as

$$k_\rho = (k^2 - k_z^2)^{1/2} \tag{5}$$

and $\rho_1 = (x^2 + y^2)^{1/2}$, $\rho_2 = [x^2 + (y - d)^2]^{1/2}$.

The $H_o^{(2)}$ is the Hankel function of the second kind of zero order, and we have used the identity [4]

$$\frac{e^{-jk\sqrt{\rho^2 + z^2}}}{\sqrt{\rho^2 + z^2}} = \frac{1}{2j} \int_{-\infty}^{\infty} H_o^{(2)}(k_\rho \rho)\ e^{jk_z z} dk_z \tag{6}$$

According to our assumption $\frac{a}{d} << 1$. Therefore we can make the following approximation

$$\sqrt{x^2 + (y - d)^2}\ \Big|_{x^2 + y^2 = a^2} \simeq d(1 - \frac{y}{d} + \frac{1}{2}\frac{a^2}{d^2}) \simeq d \tag{7}$$

Using (7), (4) may be simplified for $x^2 + y^2 = a^2$ and we obtain,

$$\Psi_{\pm}(x,y,k_z)\Big|_{x^2 + y^2 = a^2} \simeq \frac{1}{4j}\, \overline{I}_{\pm}(k_z)[H_o^{(2)}(k_\rho a) \pm H_o^{(2)}(k_\rho d)] \tag{8}$$

The z-directed scattered field due to the induced currents is obtained from Ψ according to

$$E_{z_{\pm}}^{s}(x,y,z) = \frac{1}{j\omega\varepsilon}(\frac{\partial^2}{\partial z^2} + k^2)\Psi_{\pm}(x,y,z) \tag{9}$$

The field can also be written as a function of $\overline{\Psi}$, the Fourier transform

of Ψ. Using the inverse transform of (3), namely

$$\Psi_{\pm}(x,y,z) = \frac{1}{2\pi} \int_{-\infty}^{\infty} \overline{\Psi}_{\pm}(x,y,k_z) e^{jk_z z} dk_z \tag{10}$$

and substituting (10) into (9) results in

$$E^s_{z_{\pm}}(x,y,z) = \frac{1}{2\pi} \int_{-\infty}^{\infty} \frac{k^2 - k_z^2}{j\omega\varepsilon} \overline{\Psi}_{\pm}(x,y,k_z) e^{jk_z z} dk_z \tag{11}$$

Hence, the transformed solution to the field is readily given by

$$\overline{E}^s_{z_{\pm}}(x,y,k_z) = \frac{k^2 - k_z^2}{j\omega\varepsilon} \overline{\Psi}_{\pm}(x,y,k_z) \tag{12}$$

where $\overline{\Psi}$ is given, for the general case, by (4).

The total z-directed field, with the conducting cylinders present, is the sum of the incident and scattered fields, that is,

$$E_{z_{\pm}} = E^i_{z_{\pm}} + E^s_{z_{\pm}}$$

For each cylinder the boundary condition $E_z = 0$ must be satisfied on the cylinder surface. Without loss of generality, we can deal with the cylinder centered at the origin. Thus, we obtain

$$E^i_{z_{\pm}}(x,y,z) + E^s_{z_{\pm}}(x,y,z) \Big|_{x^2 + y^2 = a^2,\ -\infty < z < \infty} = 0 \tag{13}$$

The transformed solution of the field should also satisfy (13), that is,

$$\overline{E}^i_{z_{\pm}}(x,y,k_z) + \overline{E}^s_{z_{\pm}}(x,y,k_z) \Big|_{x^2 + y^2 = a^2} = 0 \tag{14}$$

where

$$\overline{E}^i_{z_{\pm}}(x,y,k_z) = \int_{-\infty}^{\infty} E^i_{z_{\pm}}(x,y,z) e^{-jk_z z} dz \tag{15}$$

and

$\overline{E}^s_z(x,y,k_z)$ is given by (12).

Using $\overline{E}^s_{z_{\pm}}$ together with the approximate $\overline{\Psi}_{\pm}$ of (8) in (14) results in the

following expression for the transformed current

$$\bar{I}_{\pm}(k_z) = \frac{4\omega\epsilon \bar{E}^{i}_{\pm}(x,y,k_z)\Big|_{x^2+y^2=a^2}}{k_\rho^2[H_o^{(2)}(k_\rho a) \pm H_o^{(2)}(k_\rho d)]} \tag{16}$$

Applying straight-forward inverse transform on (16), one readily obtains the current on the wire. We have,

$$I_{\pm}(z) = \frac{2\omega\epsilon}{\pi} \int_{-\infty}^{\infty} \frac{\bar{E}^{i}_{z_{\pm}}(x,y,k_z)\Big|_{x^2+y^2=a^2}}{k_\rho^2[H_o^{(2)}(k_\rho a) \pm H_o^{(2)}(k_\rho d)]} e^{jk_z z} dk_z \tag{17}$$

In case of an incident wave which is neither symmetric nor antisymmetric, it may be represented as a superposition of symmetric and antisymmetric incident waves as follows

$$E^i_z = E^i_{z_+} + E^i_{z_-}$$

and the currents will be given then by

$$I_1(z) = I_+(z) + I_-(z) \tag{18}$$

for the wire centered at $x = 0$, $y = 0$ and

$$I_2(z) = I_+(z) - I_-(z) \tag{19}$$

for the wire centered at $x = 0$, $y = d$. From (17) we quote

$$I_+(z) = \frac{2\omega\epsilon}{\pi} \int_{-\infty}^{\infty} \frac{\bar{E}^{i}_{z_+}(x,y,k_z)\Big|_{x^2+y^2=a^2}}{k_\rho^2[H_o^{(2)}(k_\rho a) + H_o^{(2)}(k_\rho d)]} e^{jk_z z} dk_z$$

$$I_-(z) = \frac{2\omega\epsilon}{\pi} \int_{-\infty}^{\infty} \frac{\bar{E}^{i}_{z_-}(x,y,k_z)\Big|_{x^2+y^2=a^2}}{k_\rho^2[H_o^{(2)}(k_\rho a) - H_o^{(2)}(k_\rho d)]} e^{jk_z z} dk_z \tag{20}$$

III. Plane Wave Excitation

Figure 2 shows a plane wave incident upon the two-wire structure. The electric incident field has been divided into the sum,

$$\underline{E}^{inc} = \underline{E}_h^{inc} + \underline{E}_e^{inc} \tag{21}$$

The subscripts h and e denote H and E polarizations, respectively. H modes are those for which $\underline{E}$ is parallel to the plane spanned by the $\hat{z}$ and $\hat{k}$. $\hat{k}$ represents a unit vector in the direction of propagation; the carat represents a unit vector. E modes are those for which $\underline{E}$ is normal to this plane. Hence, we have

$$\underline{E}_e^{inc} = [\underline{E}^{inc} \cdot (k \times z)] \frac{\hat{k} \times \hat{z}}{|\hat{k} \times \hat{z}|^2} \tag{22}$$

$$\underline{E}_h^{inc} = \underline{E}^{inc} - \underline{E}_e^{inc} \tag{23}$$

Since we have already limited ourselves to a thin wire problem which can be replaced with a filamentary model, the E-polarized component does not contribute to the induced current. Therefore we will consider only the H component. The last is given for the incident wave depicted in Figure 2 by

$$\underline{E}_h^{inc}(x,y,z) = E_o(-\hat{x} \cos\theta_o \cos\phi_o - \hat{y} \cos\theta_o \sin\phi_o + \hat{z} \sin\theta_o) e^{+j(k_{xo} + k_{yo}y + k_{zo}z)} \tag{24}$$

where k_{xo}, k_{yo}, k_{zo}, the axial wave numbers are

$$k_{xo} = k \sin\theta_o \cos\phi_o,\ k_{yo} = \sin\theta_o \sin\phi_o,\ \text{and}\ k_{zo} = k \cos\theta_o, \tag{25}$$

and θ_o, ϕ_o are, respectively, the polar and azimuthal angles of the incident wave in spherical coordinates.

The z component of $\underline{E}^{inc}$ may be represented as a sum of symetric and antisymmetric incident waves as follows

$$E_z^{inc} = E_{z_+}^{inc} + E_{z_-}^{inc} \tag{26}$$

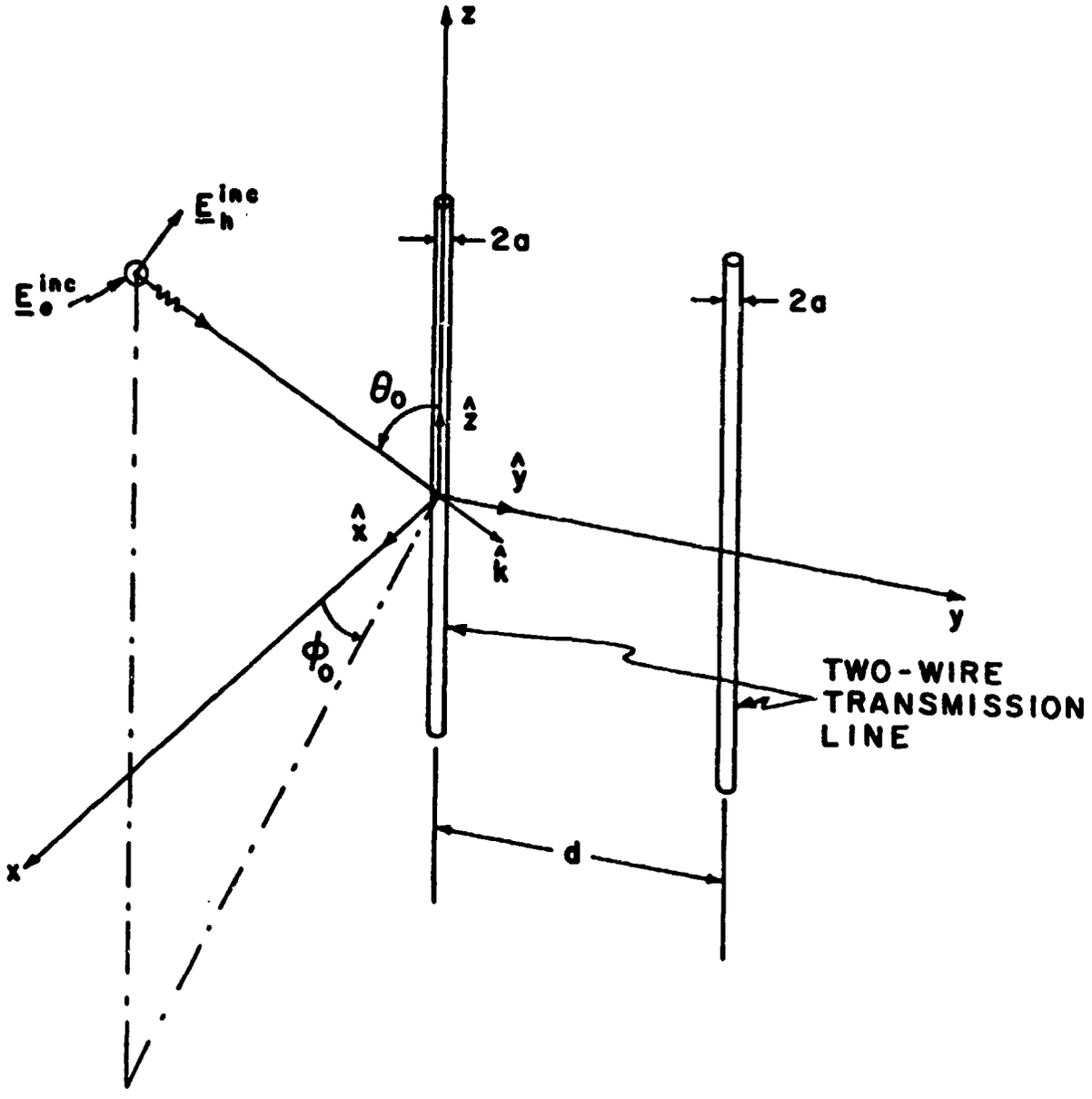

Fig. 2 A plane wave incident upon the two-wire structure.

where $E_{z_+}^{inc}$, the symmetric excitation, is given by

$$E_{z_+}^{inc}(x,y,z) = \frac{1}{2} E_o \sin\theta_o [e^{j(k_{xo}x + k_{yo}y + k_{zo}z)} + e^{j[k_{xo}x + k_{yo}(d - y) + k_{zo}z]}] \tag{27}$$

and $E_{z_-}^{inc}$, the antisymmetric excitation, is given by

$$E_{z_-}^{inc}(x,y,z) = \frac{1}{2} E_o \sin\theta_o [e^{j(k_{xo}x + k_{yo}y + k_{zo}z)} - e^{j[k_{xo}x + k_{yo}(d - y) + k_{zo}z]}] \tag{28}$$

The transformed field is readily obtained by applying the Fourier transform. We have

$$\bar{E}_z^{inc} = \bar{E}_{z_+}^{inc} + \bar{E}_{z_-}^{inc} \tag{29}$$

where

$$\bar{E}_{z_+}(x,y,k_z) = \pi E_o \sin\theta_o e^{jk_{xo}x} [e^{jk_{yo}y} + e^{jk_{yo}(d - y)}] \delta(k_z - k_{zo}) \tag{30}$$

$$\bar{E}_{z_-}(x,y,k_z) = \pi E_o \sin\theta_o e^{jk_{xo}x} [e^{jk_{yo}y} - e^{jk_{yo}(d - y)}] \delta(k_z - k_{zo}) \tag{31}$$

where the δ denotes theimpulse function. For $x^2 + y^2 = a^2 << \lambda^2$, (30) and (31) reduce, respectively, to,

$$\bar{E}_{z_+}(x,y,k_z) \Big|_{x^2 + y^2 = a^2} \simeq \pi E_o \sin\theta_o (1 + e^{jk_{yo}d}) \delta(k_z - k_{zo}) \tag{32}$$

and

$$\bar{E}_{z_-}(x,y,k_z) \Big|_{x^2 + y^2 = a^2} \simeq \pi E_o \sin\theta_o (1 - e^{jk_{yo}d}) \delta(k_z - k_{zo}) \tag{33}$$

substituting (32) and (33) in (18), (19) and (20) yields

$$I_1(z) = \frac{2E_o}{\eta k_{o0}} \left[\frac{1 + e^{jk_{yo}d}}{H_o^{(2)}(k_{\rho o}a) + H_o^{(2)}(k_{\rho o}d)} + \frac{1 - e^{jk_{yo}d}}{H_o^{(2)}(k_{\rho o}a) - H_o^{(2)}(k_{\rho o}d)} \right] e^{jk_{zo}z} \tag{34}$$

For the wire centered at $x = 0$, $y = 0$ and

$$I_2(z) = \frac{2E_o}{\eta k_{\rho o}} \left[\frac{1 + e^{jk_{yo}d}}{H_o^{(2)}(k_{\rho o}a) + H_o^{(2)}(k_{\rho o}d)} - \frac{1 - e^{jk_{yo}d}}{H_o^{(2)}(k_{\rho o}a) - H_o^{(2)}(k_{\rho o}d)} \right] e^{jk_{zo}z} \tag{35}$$

for the wire centered at $x = 0$, $y = d$ where $k_{\rho o}$, the radial wave number, is $k_{\rho o} = (k^2 - k_{zo}^2)^{1/2} = k \sin \theta_o$ and η denotes the characteristic impedance of the medium given by $\eta = (\frac{\mu}{\varepsilon})^{1/2}$.

Equations (34) and (35) reduce properly in some limiting cases. For $\theta_o = \frac{\pi}{2}$, $\phi_o = \pi$ we deal with a plane wave, $E_z^i = E_o e^{-jkx}$. Taking the limits $kd \to \infty$ and $ka \to 0$, and using large argument and small argument formulas for $H_o^{(2)}$, we obtain

$$I(z) = j \frac{2\pi E_o}{\omega\mu \ \ell n(ka)} \tag{36}$$

which agrees with Harrington's result [5] for the total current induced on a single thin wire due to identical excitation.

IV. Solution of the Superposition Integral in Terms of the TEM Mode and the Leaky Modes

The integral representation for the current [Equation (17)] is rewritten for convenience as

$$\int_{-\infty}^{\infty} f_{\pm}(k_z,x,y) \Big|_{x^2+y^2=a^2} e^{jk_z z}\, dk_z \tag{37}$$

where

$$f_{\pm}(k_z,x,y) \Big|_{x^2+y^2=a^2} = \frac{2\omega\varepsilon}{\pi} \frac{\bar{E}^{i}_{z_{\pm}}(x,y,k_z) \Big|_{x^2+y^2=a^2}}{k_\rho^2[H_o^{(2)}(k_{\rho o}a) \pm H_o^{(2)}(k_\rho d)]}$$

The singularities of the integrand are two branch points at $k_z = \pm k$. On introducing a small loss perturbation one finds that for positive values in the z direction ($z > 0$), the contour runs on the top sheet of the k_z plane along the real axis, below the branch point $-k$ and above $+k$. If the integrand in (37) does not have poles in the upper half of the top sheet of the k_z plane, it becomes possible to deform the original path of integration, the real axis, from $-\infty$ to $+\infty$, to a new path ABCD as shown in Figure 3. The path ABCD may be modified by letting it cross the branch cut twice, entering into the bottom sheet in this process. The portion of the path in the lower sheet, namely C', may now be deformed into a new path C", as shown in Figure 4, with the purpose of improving the convergence of the integral [2, 6, 7]. In the process of carrying out the last step, we cross the poles of the integrand in (37). These poles are solutions of the equation

$$H_o^{(2)}\left(\sqrt{k^2 - k_z^2}\,a\right) \pm H_o^{(2)}\left(\sqrt{k^2 - k_z^2}\,d\right) = 0 \tag{38}$$

Equation (38) corresponds to Equation (30) of Marin [2]. Lying in the second quadrant of the k_z plane, these poles are associated with fields that decay as they propagate in the z direction. However, since

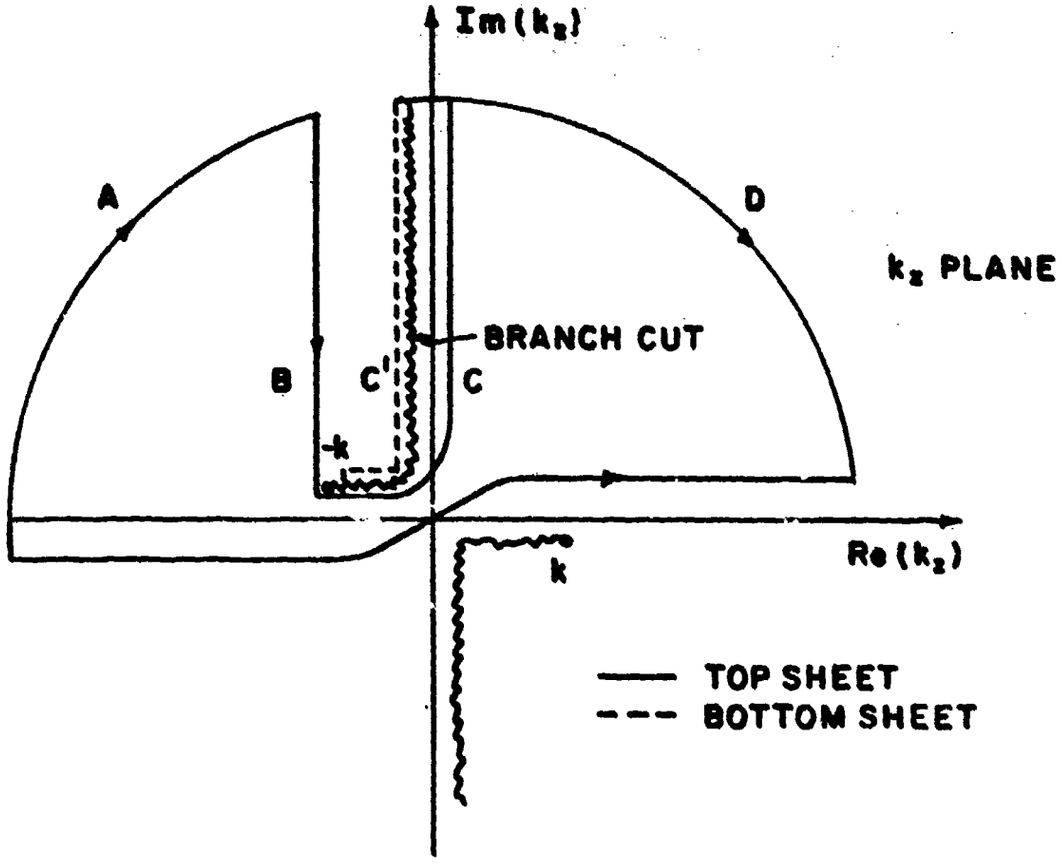

Fig. 3 Illustration of the contours ABDC and ABC'D.

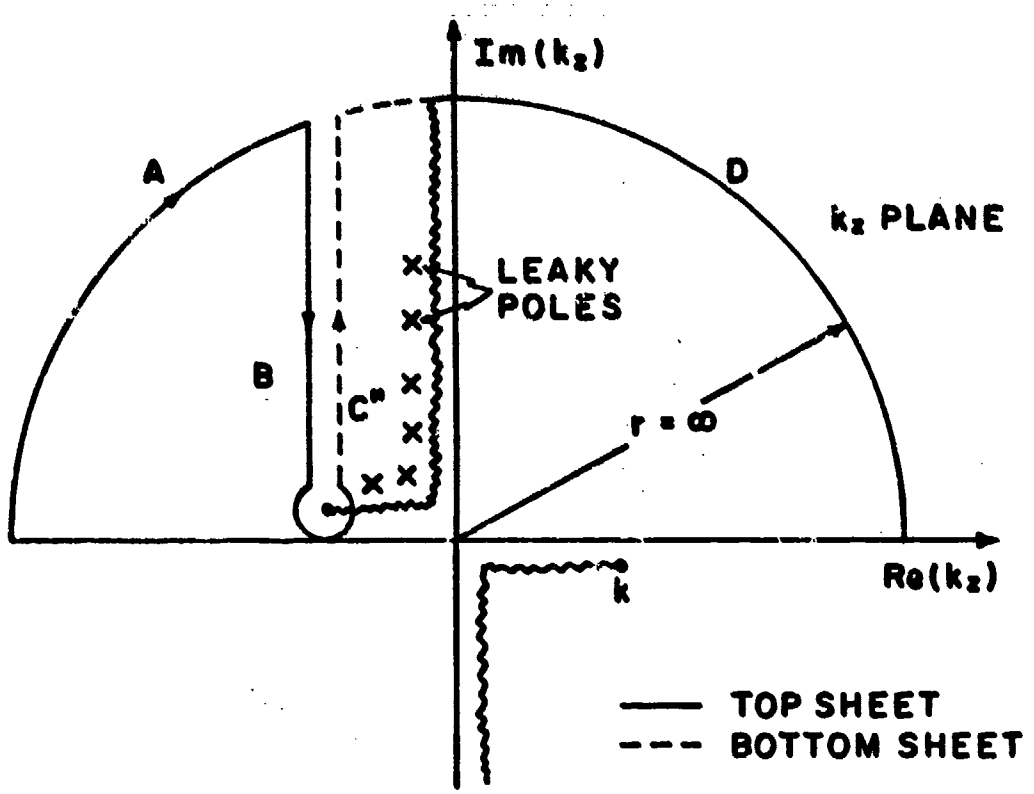

Fig. 4 Deforming the contour to cross the leaky poles.

these poles belong to the bottom sheet of the k_z plane, the fields associated with them show a growth behavior in the transverse direction. For this reason, these modes are referred to as the improper, or leaky, modes [7].

In this fashion, when deforming the contour no contribution will arise from any segment of the infinite circle (A + D) on the proper sheet of the complex k_z plane. On applying Cauchy's theorem, one has

$$I_{\pm}(z) = \sum \Big[\text{residues of } \Big[f_{\pm}\ (f\ (k_z,x,y)\ \Big|_{x^2+y^2=a^2}\ \exp(jk_z z)\Big]$$

$$\text{at the leaky poles when C' is deformed to C".}\Big]$$

$$+ \int_{B+C} f_{\pm}(k_z,x,y)\Big|_{x^2+y^2=a^2} \exp(jk_z z)dk_z \tag{39}$$

The first term in Equation (39) is the contribution of the leaky poles, and it may be rewritten as (Appendix A1)

$$I_{\pm\text{leaky}}(z) = \frac{4j}{\eta}\ \frac{k}{k_{\rho p\pm}}\ \frac{\bar{E}^{inc}_{z_{\pm}}(x,y,k_{zp\pm})\ \ x^2+y^2=a^2 \ll \lambda^2}{k_{zp\pm}[aH_1^{(2)}(k_{\rho p\pm}a) \pm dH_1^{(2)}(k_{\rho p\pm}d)]}\ e^{jk_{zp\pm}z} \tag{40}$$

where $k_z = k_{zp_{\pm}}$ are the consecutive roots of the equation

$$H_0^{(2)}(\sqrt{k^2-k_z^2}\,a) + H_0^{(2)}(\sqrt{k^2-k_z^2}\,d) = 0$$

and will be referred to as even poles; $k_z = k_{zp_-}$ are the consecutive roots of the equation

$$H_0^{(2)}\ (\sqrt{k^2-k_z^2}\,a) - H_0^{(2)}(\sqrt{k^2-k_z^2}\,d) = 0$$

and will be referred to as odd poles, and

$$k_{\rho p\pm} = (k^2 - k^2_{zp\pm})^{1/2}$$

In the above equations we exclude, of course, those roots for which $Re(k_z) < -k$ or $Re(k_z) > 0$ and $Im\ (k_z < 0$. This series, in (40), is often the dominant contribution to the current of the wires [6].

For negative values in the z direction ($z < 0$), the contour runs on the top sheet of the k_z plane along the real axis, above the branch point $-k$ and below $+k$. If the integrand in (37) does not have poles in the lower half of the top sheet of the k_z plane, then making similar contour deformation in the lower part of the k_z plane, one crosses the leaky poles, which are the roots of Equation (38) that lie in the fourth quadrant and are the image of the previous poles. Hence for $z < 0$ we may apply (40) replacing $k_{zp\pm}$ by $-k_{zp\pm}$.

The second term is in fact the integral along a branch cut starting at $-k$ and parallel to the imaginary axis in the upper half of the k_z plane [8]. It results in the contribution of the branch point which, for antisymmetric excitation, may be interpreted as the TEM mode, represented by (Appendix A2)

$$I_{TEM}(z) = \frac{\pi}{\eta \ln(\frac{d}{a})} \bar{E}_{z_-}^{inc}(x,y,-k) \Big|_{x^2+y^2=a^2} e^{-jkz} \tag{41}$$

For symmetric excitation the branch point contribution is zero. The other contribution is the branch cut contribution, which is rather time-consuming to evaluate, but is negligible [8].

Hence, the current induced in the case of an arbitrary incident wave will be given by

$$I_1(z) = I_{TEM}(z) + I_{+leaky}(z) + I_{-leaky}(z) \tag{42}$$

for the wire centered at $x = 0$, $y = 0$, and by

$$I_2(z) = -I_{-TEM}(z) + I_{+leaky}(z) - I_{-leaky}(z) \tag{43}$$

for the wire centered at $x = 0$, $y = d$, where $I_{+leaky}(z)$ and $I_{-TEM}(z)$ are given by Equation (40) and Equation (41), respectively.

V. Voltage Source Excitation

Consider the ideal voltage generator centered at the origin as depicted in Figure 5. The equivalent superposition of symmetric and antisymmetric excitations is shown in Figure 6. For this case, the incident wave is given by [3]

$$E_z^{inc} = \begin{bmatrix} v\delta(z) & x^2 + y^2 = a^2 \\ 0 & \text{elsewhere} \end{bmatrix} \tag{44}$$

where δ denotes the impulse function. E_z^{inc} in (44) may be cast into the form

$$E_z^{inc} = E_{z_+}^{inc} + E_{z_-}^{inc}$$

$$E_{z_+}^{inc} = \begin{Bmatrix} v/2\ \delta(z) & x^2 + y^2 = a^2 \\ v/2\ \delta(z) & x^2 + (y - d)^2 = a^2 \\ 0 & \text{elsewhere} \end{Bmatrix} \tag{45}$$

$$E_{z_-}^{inc} = \begin{Bmatrix} v/2\ \delta(z) & x^2 + y^2 = a^2 \\ -v/2\ \delta(z) & x^2 + (y - d)^2 = a^2 \\ 0 & \text{elsewhere} \end{Bmatrix} \tag{46}$$

The tranformed field may be readily obtained and at $x^2 + y^2 = a^2$, we have

$$\bar{E}_z^{inc}(x,y,k_z)\Big|_{x^2 + y^2 = a^2} = [\bar{E}_{z_+}^{inc}(x,y,k_z) + \bar{E}_{z_-}^{inc}(x,y,k_z)]\Big|_{x^2 + y^2 = a^2} \tag{47}$$

where

$$\bar{E}_{z_+}^{inc}(x,y,k_z)\Big|_{x^2 + y^2 = a^2} = v/2 \tag{48}$$

$$\bar{E}_z^{inc}(x,y,k_z)\Big|_{x^2 + y^2 = a^2} = v/2 \tag{49}$$

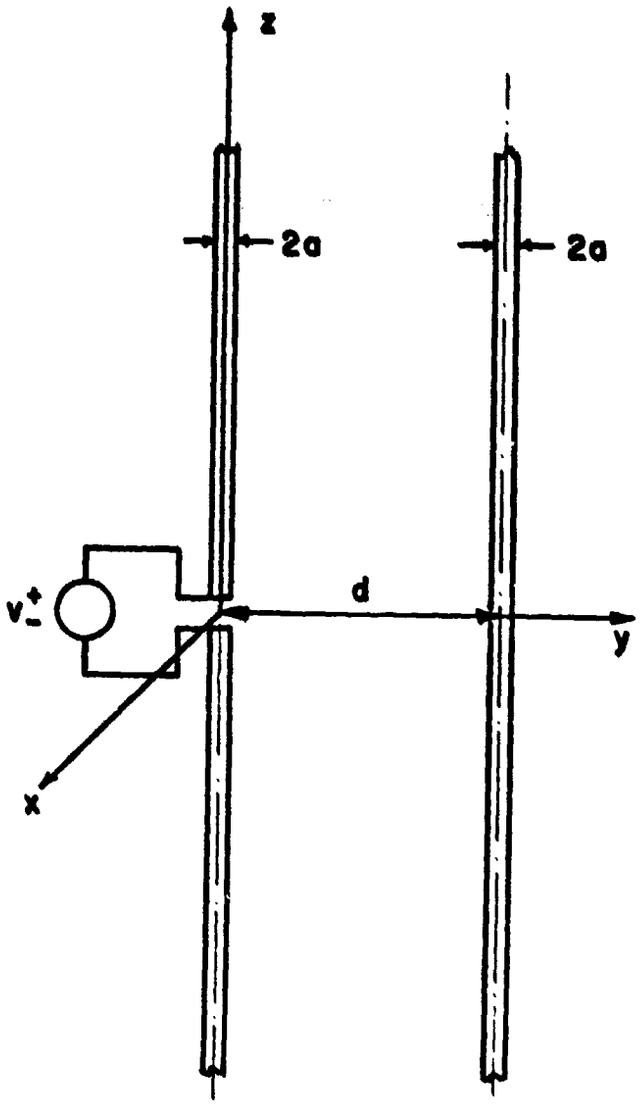

Fig. 5 Voltage-source excitation.

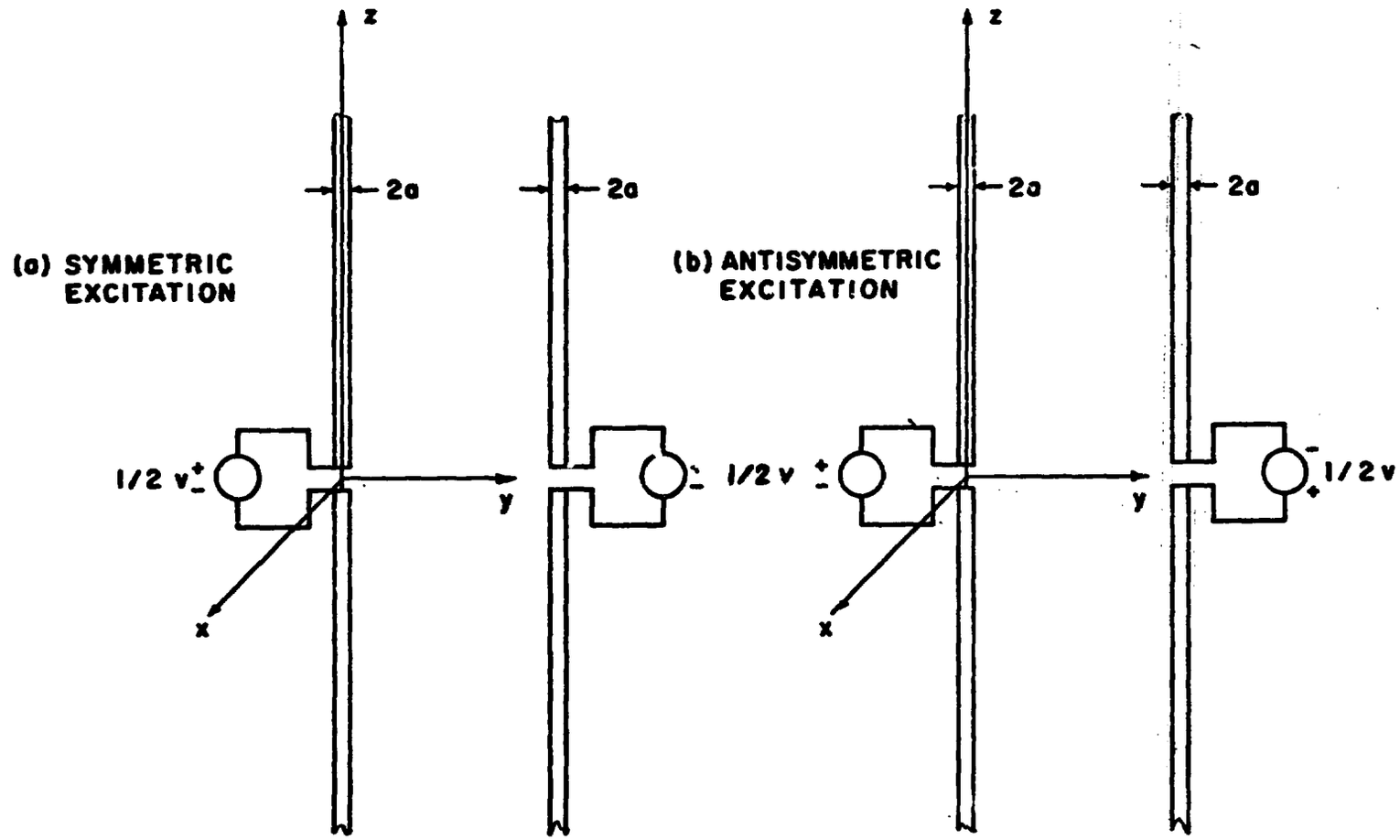

Fig. 6 A superposition of symmetric and antisymmetric excitations equivalent to that of Fig. 5.(a) symmetric excitation (b) antisymmetric excitation.

Substituting Equations (48) and (49) in Equations (41), (42) and (43), we obtain

$$I_1(z) = \frac{\pi}{\eta \ln(\frac{d}{a})} \frac{v}{2} e^{-jkz} +$$

$$\frac{2jk}{\eta} v \sum_{\substack{\text{even}\\ \text{poles}}} \frac{e^{jk_{zp_+}z}}{k_{\rho p_+} k_{zp_+} [aH_1^{(2)}(k_{\rho p_+} a) + dH_1^{(2)}(k_{\rho p_+} d)]} +$$

$$\frac{2jk}{\eta} v \sum_{\substack{\text{odd}\\ \text{poles}}} \frac{e^{jk_{zp_-}z}}{k_{\rho p_-} k_{zp_-} [aH_1^{(2)}(k_{\rho p_-} a) - dH_1^{(2)}(k_{\rho p_-} d)]} \qquad (50)$$

for the wire centered at x = 0, y = 0, and

$$I_2(z) = -\frac{\pi}{\eta \ln(\frac{d}{a})} \frac{v}{2} e^{-jkz} +$$

$$\frac{2jk}{\eta} v \sum_{\substack{\text{even}\\ \text{poles}}} \frac{e^{jk_{zp_+}z}}{k_{\rho p_+} k_{zp_+} [aH_1^{(2)}(k_{\rho p_-} a) - dH_1^{(2)}(k_{\rho p_-})]}$$

$$\frac{2jk}{\eta} v \sum_{\substack{\text{odd}\\ \text{poles}}} \frac{e^{jk_{zp_-}z}}{k_{\rho p_-} k_{zp_-} [aH_1^{(2)}(k_{\rho p_-} a) - dH_1^{(2)}(k_{\rho p_-} d)]} \qquad (51)$$

for the wire centered at x = 0, y = d.

VI. The Modal Solution of the Problem Using Generalized Network Method

Equation (38), whose roots are the z-directed wave numbers of the higher-order leaky modes, may be obtained via straight-forward analysis, as follows. Consider the problem of the two wires, having induced currents $I_1(z)$ and $I_2(z)$, respectively, due to an arbitrary impressed field E_z^i produced by external sources. The currents $I_1(z)$ and $I_2(z)$ produce scattered fields $E_{z1}^s(z)$ and $E_{z2}^s(z)$, respectively. These fields can be found in terms of the currents by the potential integral method in a manner similar to that presented under "Formulation of the Problem." We have,

$$E_{1,2}^s(x,y,z) = \frac{1}{j\omega\varepsilon}\left(\frac{\partial^2}{\partial_z^2}\right)\Psi_{1,2}(x,y,z) \tag{52}$$

where

$$\Psi_1(x,y,z) = \int_{\infty}^{\infty} I_1(z') \frac{e^{-jk\sqrt{x^2 + y^2 + (z - z')^2}}}{4\sqrt{x^2 + y^2 + (z - z')^2}}\, dz' \tag{53}$$

$$\Psi_2(x,y,z) = \int_{\infty}^{\infty} I_2(z') \frac{e^{-jk\sqrt{x^2 + (y - d)^2 + (z - z')^2}}}{\sqrt{x^2 + (y - d)^2 + (z - z')^2}}\, dz' \tag{54}$$

At each cylinder the boundary condition $E_z = 0$ must be satisfied on the surface. Hence, we obtain

$$E_z^i(x,y,z) + E_{z_1}^s(x,y,z) + E_{z_2}^s(x,y,z)\Big|_{x^2 + y^2 = a^2,\ -\infty < z < \infty} = 0 \tag{55}$$

and

$$E_z^i(x,y,z) + E_{z_1}^s(x,y,z) + E_{z_2}^s(x,y,z)\Big|_{x^2 + (y - d)^2 = a^2,\ -\infty < z < \infty} = 0 \tag{56}$$

The transformed solutions of the fields should also satisfy (55) and (56), that is

$$\bar{E}_z^i(x,y,k_z) + \bar{E}_{z_1}^s(x,y,k_z) + \bar{E}_{z_2}^s(x,y,k_z)\Big|_{x^2+y^2=a^2} = 0 \tag{57}$$

$$\bar{E}_z^i(x,y,k_z) + \bar{E}_{z_1}^s(x,y,k_z) + \bar{E}_{z_2}^s(x,y,k_z)\Big|_{x^2+(y-d)^2=a^2} = 0 \tag{58}$$

Substituting the appropriate transformations in a manner analogous to that in "Formulation of the Problem," (57) and (58) may be cast in a matrix form similar to that which occurs in the familiar method of moments formulation [3]. We have

$$\begin{bmatrix} Z_{11} & Z_{12} \\ Z_{12} & Z_{22} \end{bmatrix} \begin{bmatrix} J_1 \\ J_2 \end{bmatrix} = \begin{bmatrix} V_1 \\ V_2 \end{bmatrix} \tag{59}$$

where the elements of the matrix [Z] are called "generalized impedances" and are given by,

$$Z_{11} = \frac{k^2 - k_z^2}{4\omega\varepsilon} H_o^{(2)}\left(\sqrt{k^2 - k_z^2}\, a\right), \quad Z_{22} = Z_{11}$$

$$Z_{12} = \frac{k^2 - k_z^2}{4\omega\varepsilon} H_o^{(2)}\left(\sqrt{k^2 - k_z^2}\, d\right) \tag{60}$$

the elements of the vector $\vec{J}$ are called "generalized currents" and are given by

$$J_1 = \bar{I}_1(k_z) \;, \quad J_2 = \bar{I}_2(k_z) \tag{61}$$

and the elements of the vector $\vec{V}$ are called "generalized voltages" and are given by

$$V_1 = -\bar{E}_{z_1}^i \;, \quad V_2 = -\bar{E}_{z_2}^i \tag{62}$$

In order to determine the modal solution of the problem, which is connected with the zeros of the total impedance of the system, we seek for all possible source-free solutions of (59). Hence the appropriate matrix equation is (59) with the right side zero; that is

$$\begin{bmatrix} Z_{11} & Z_{12} \\ Z_{12} & Z_{11} \end{bmatrix} \begin{bmatrix} J_1 \\ J_2 \end{bmatrix} = \begin{bmatrix} 0 \\ 0 \end{bmatrix} \tag{63}$$

Equation (63) will have a non-trivial solution provided that the determinant of the impedance matrix is zero. That is

$$Z_{11}^2 - Z_{12}^2 = 0 \tag{64}$$

which may be rewritten as

$$Z_{11} \pm Z_{12} = 0 \tag{65}$$

Substituting (60) into (65) results in

$$k_z = \pm k \tag{66}$$

which represents the TEM mode; and,

$$H_o^{(2)} \left(\sqrt{k^2 - k_z^2}\, a\right) \pm H_o^{(2)} \left(\sqrt{k^2 - k_z^2}\, d\right) = 0 \tag{67}$$

which is identical to (38). Once the proper values of k_z for which (63) is satisfied are found, the eigenvectors J_1, J_2 may be obtained by solving (59) for each k_z.

VII. Results and Conclusions

The case of plane wave excitation is shown in Figures 7-9. The example treats an incident plane wave for which θ_o, the polar angle is 45° and ϕ_o, the azimuthal angle is 45°. Figures 7-8 describe the magnitude of the currents induced on the wires - Eqs. (35),(36) - vs. the normalized distance between the wires, for a fixed ratio $d/a = 10$. Note the oscillations, which reflect the changes that occur in the mutual coupling between the wires as we vary the distance. Figure 9 shows the magnitude of the currents induced on the wires vs. the ratio d/a for a given distance between the wires $d/\lambda = 2.5$. One may observe that the currents decrease monotonically as the ratio d/a is increased (i.e., the radius a/λ is decreased).

The case of voltage source excitation is shown in Figures 10 through 20. Figures 10-13, show the variation of the imaginary part of the normalized z-directed wave numbers, which are the normalized attenuation constants in the z-direction, as a function of the normalized distance between the wires, for a given ratio d/a. We have depicted only the two lowest even modes and the two lowest odd modes, and we have chosen $d/a = 10$ and $d/a = 100$ for Figures 10-11, and Figures 12-13 respectively. By looking at the graphs one can readily see, as may be expected, that for fixed d/a, the attenuation constants decrease as the distance between the wires is increased. In contrast the attenuation constants increase for fixed distance d/λ as the ratio d/a is increased (i.e. when the radius, a/λ, is decreased). This fact is also demonstrated in Figure 14 which shows the variation of

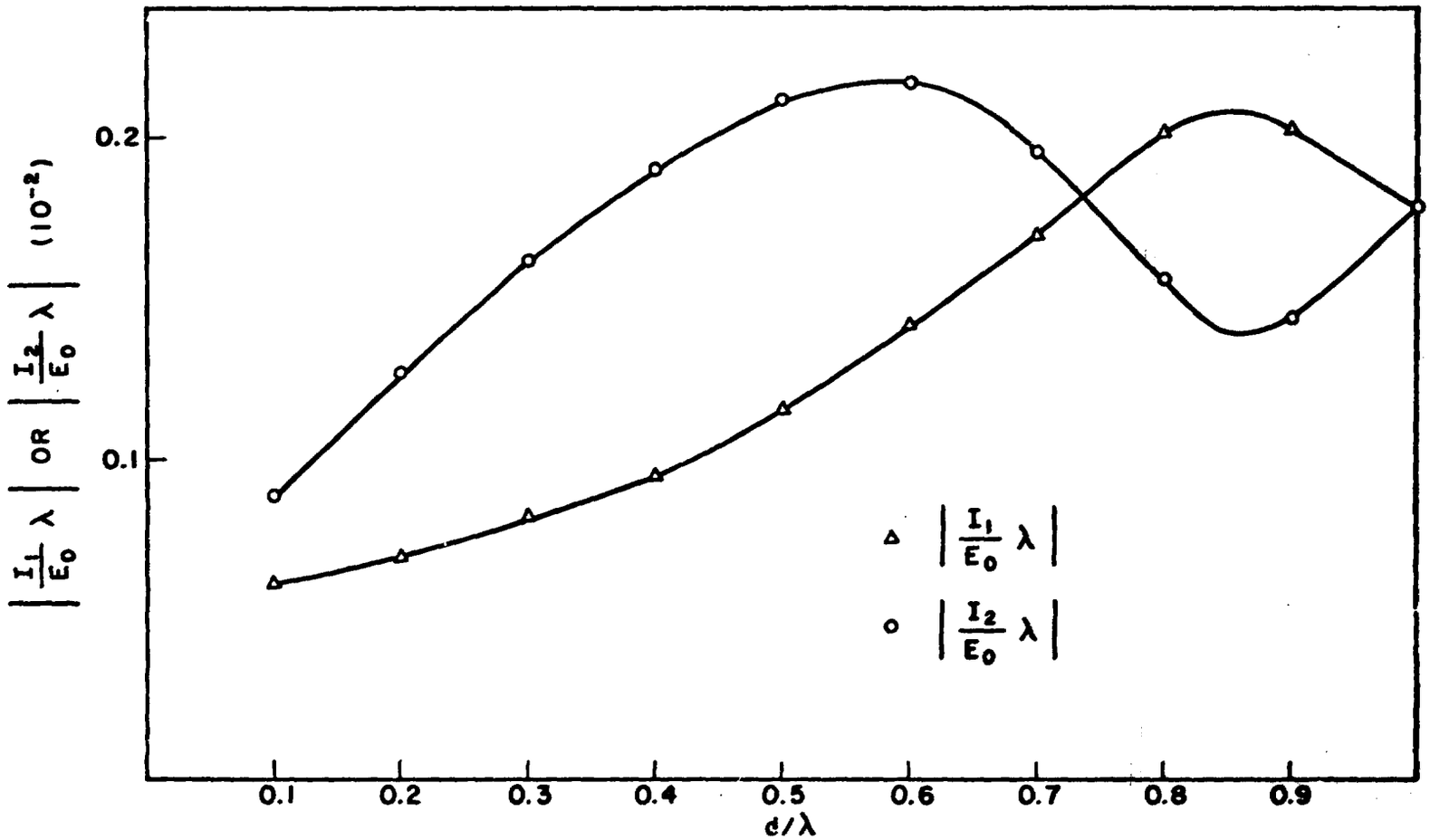

Fig. 7 The currents induced on the wires due to plane wave excitation, vs. the normalized distance between the wires ($d/a = 10$, $d/\lambda < 1$).

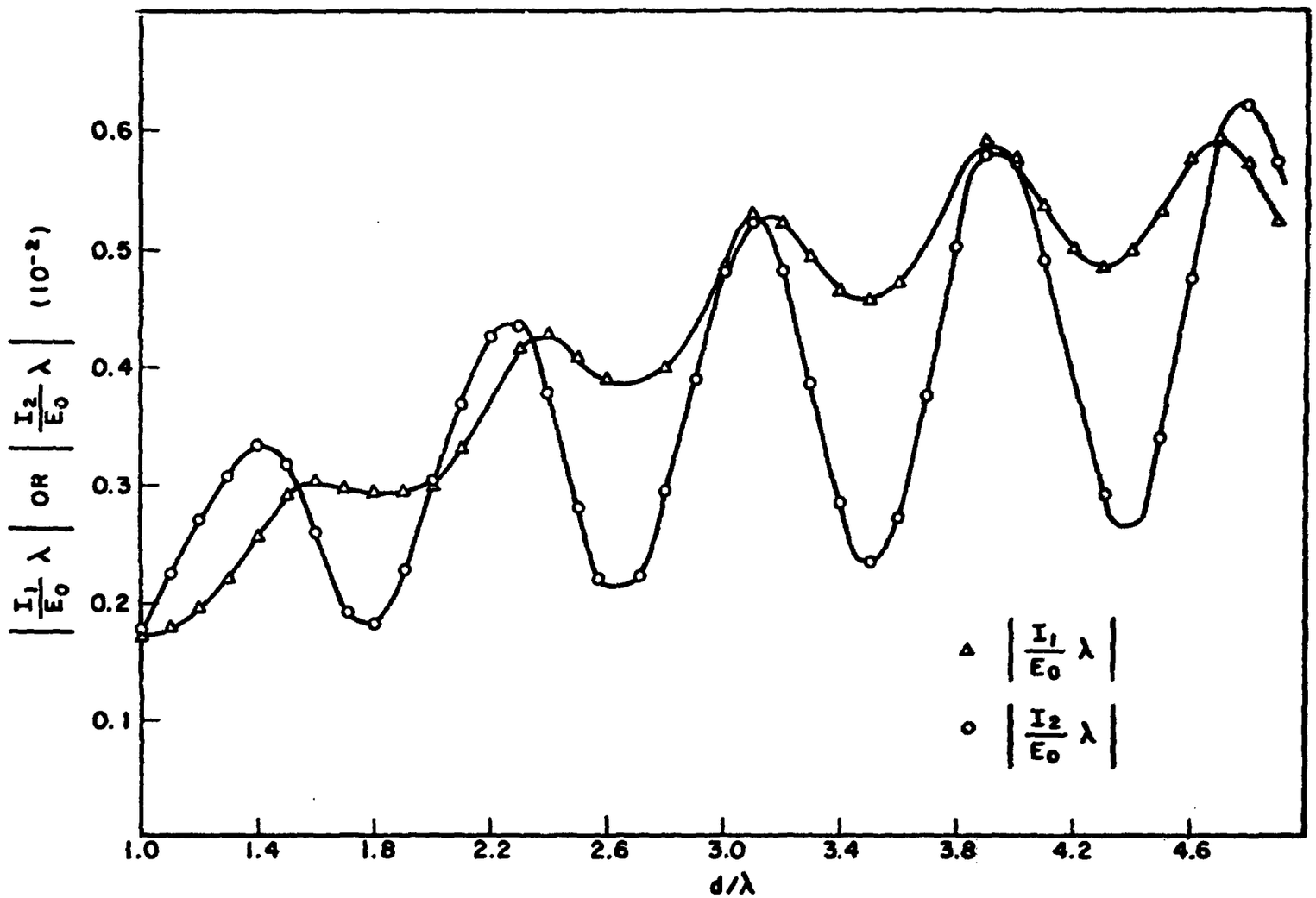

Fig. 8 The currents induced on the wires due to plane wave excitation, vs. the normalized distance between the wires ($d/a = 10$, $d/\lambda > 1$).

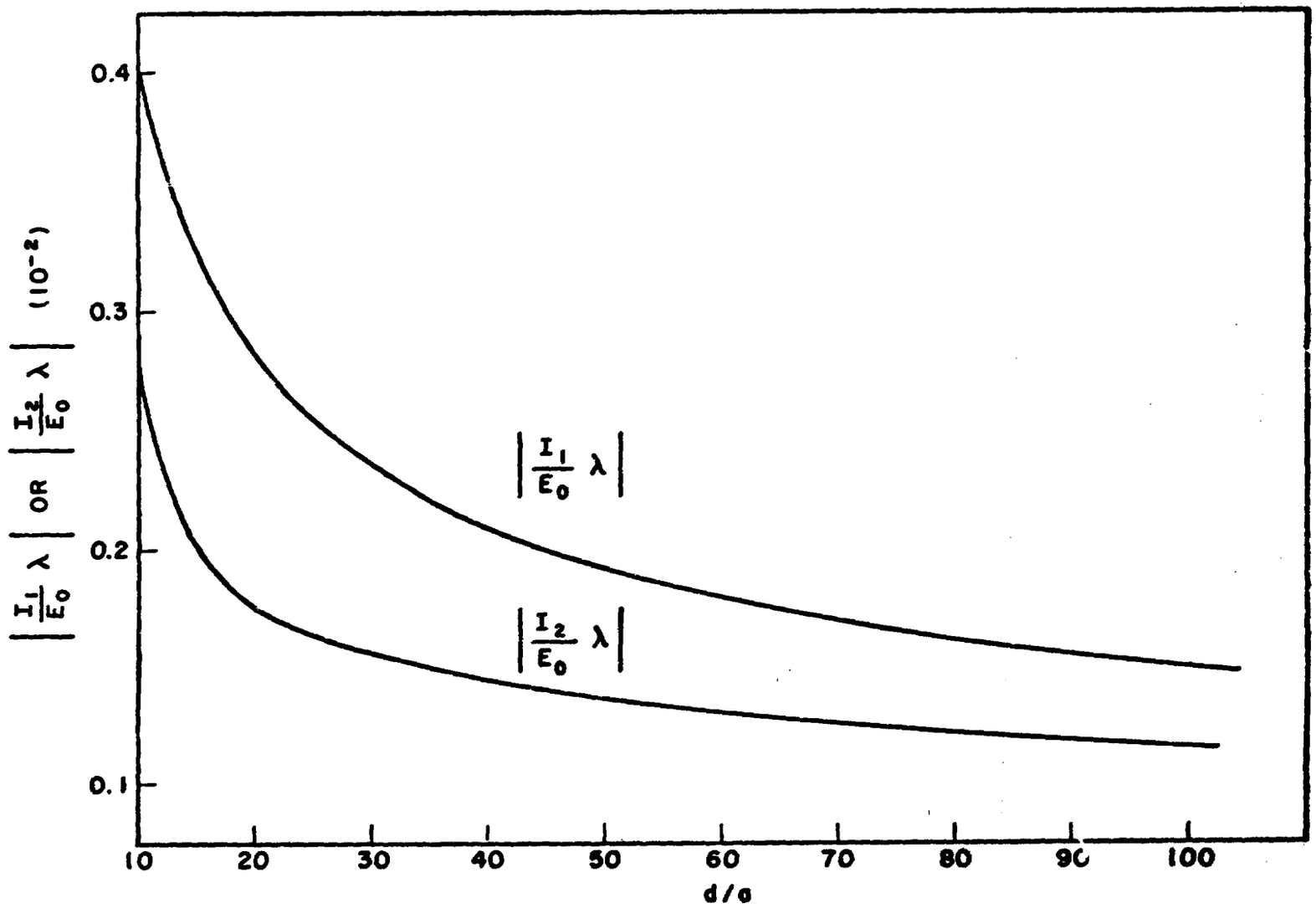

Fig. 9 The currents induced on the wires due to plane wave excitation vs. the ratio d/a, ($d/\lambda = 2.5$).

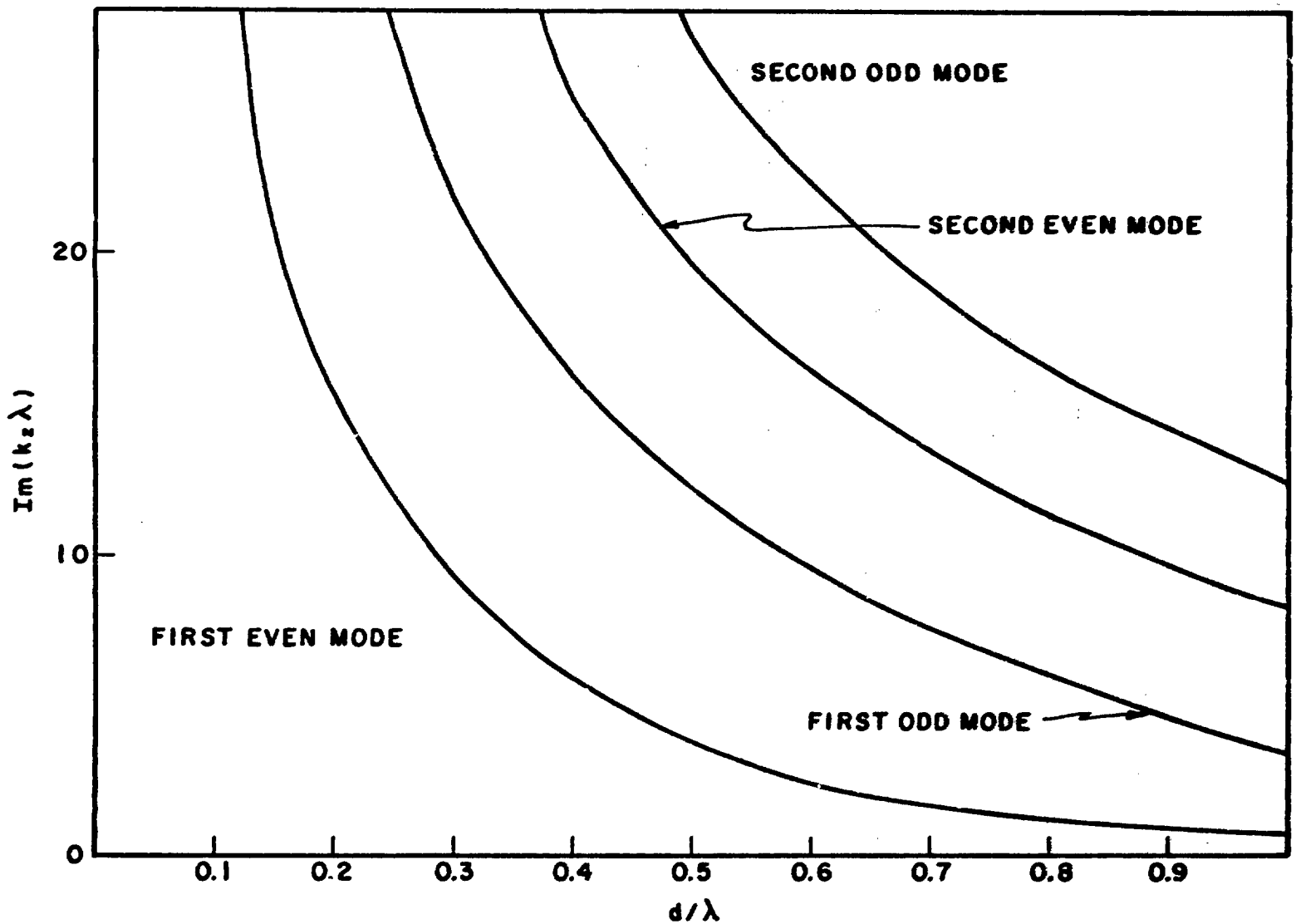

Fig. 10 The normalized attenuation constants of the two lowest even and odd modes on the wires vs. the normalized distance between the wires ($d/a = 10$, $d/\lambda < 1$).

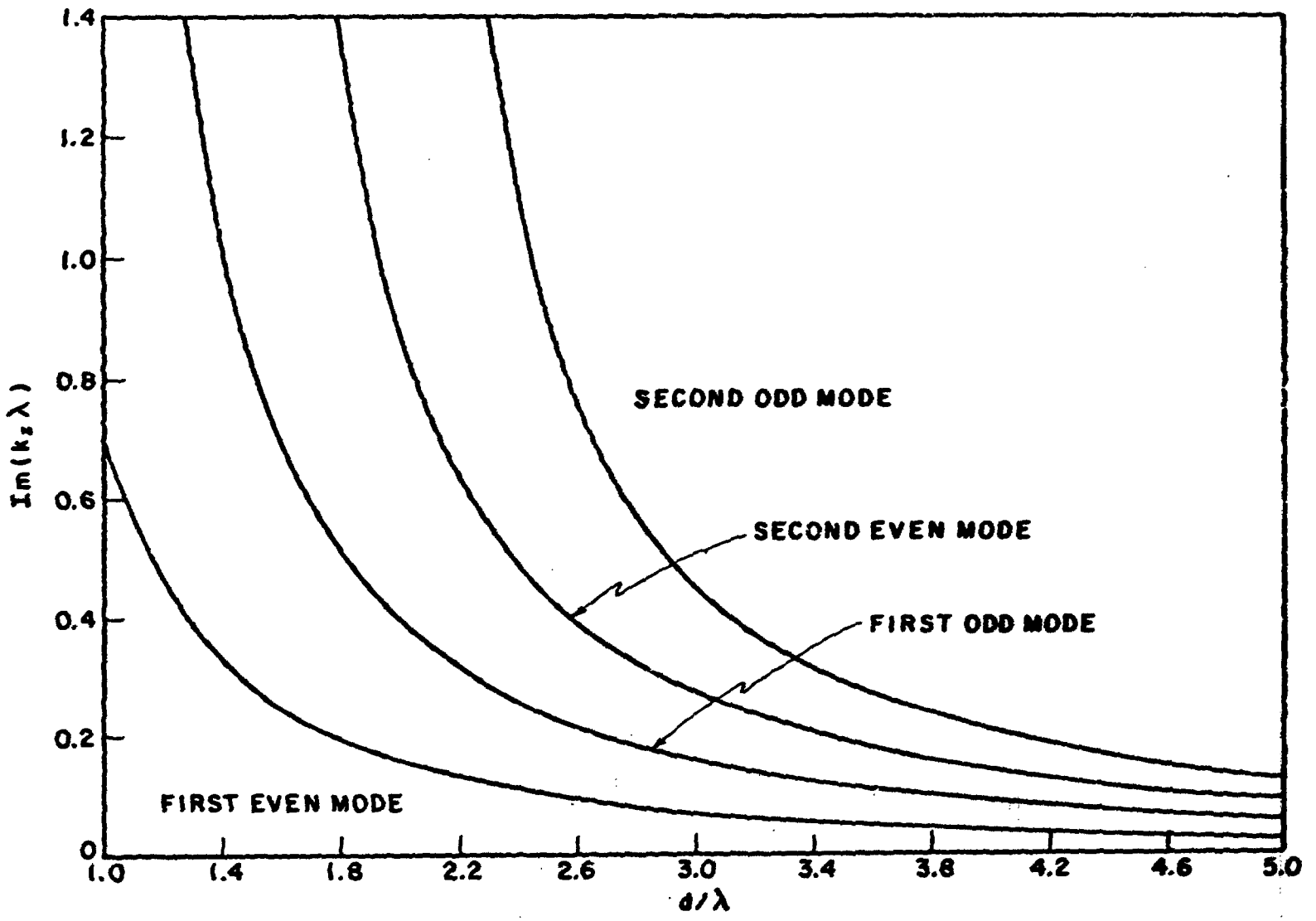

Fig. 11 The normalized attenuation constants of the two lowest even and odd modes on the wires vs. the normalized distance between the wires ($d/a = 10$, $d/\lambda > 1$).

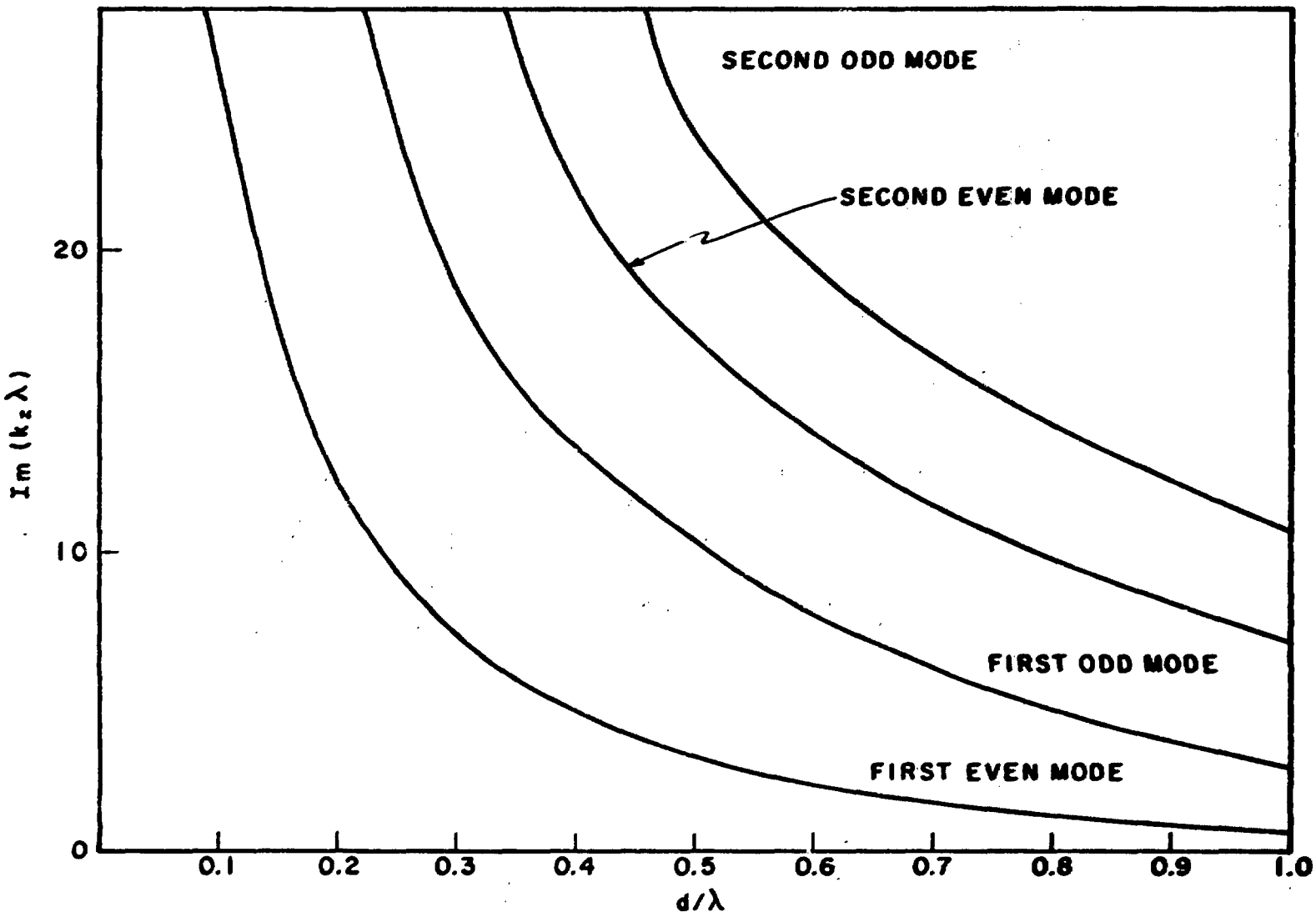

Fig. 12 The normalized attenuation constants of the two lowest even and odd modes on the wires vs. the normalized distance between the wires, ($d/a = 100$ and $d/\lambda < 1$).

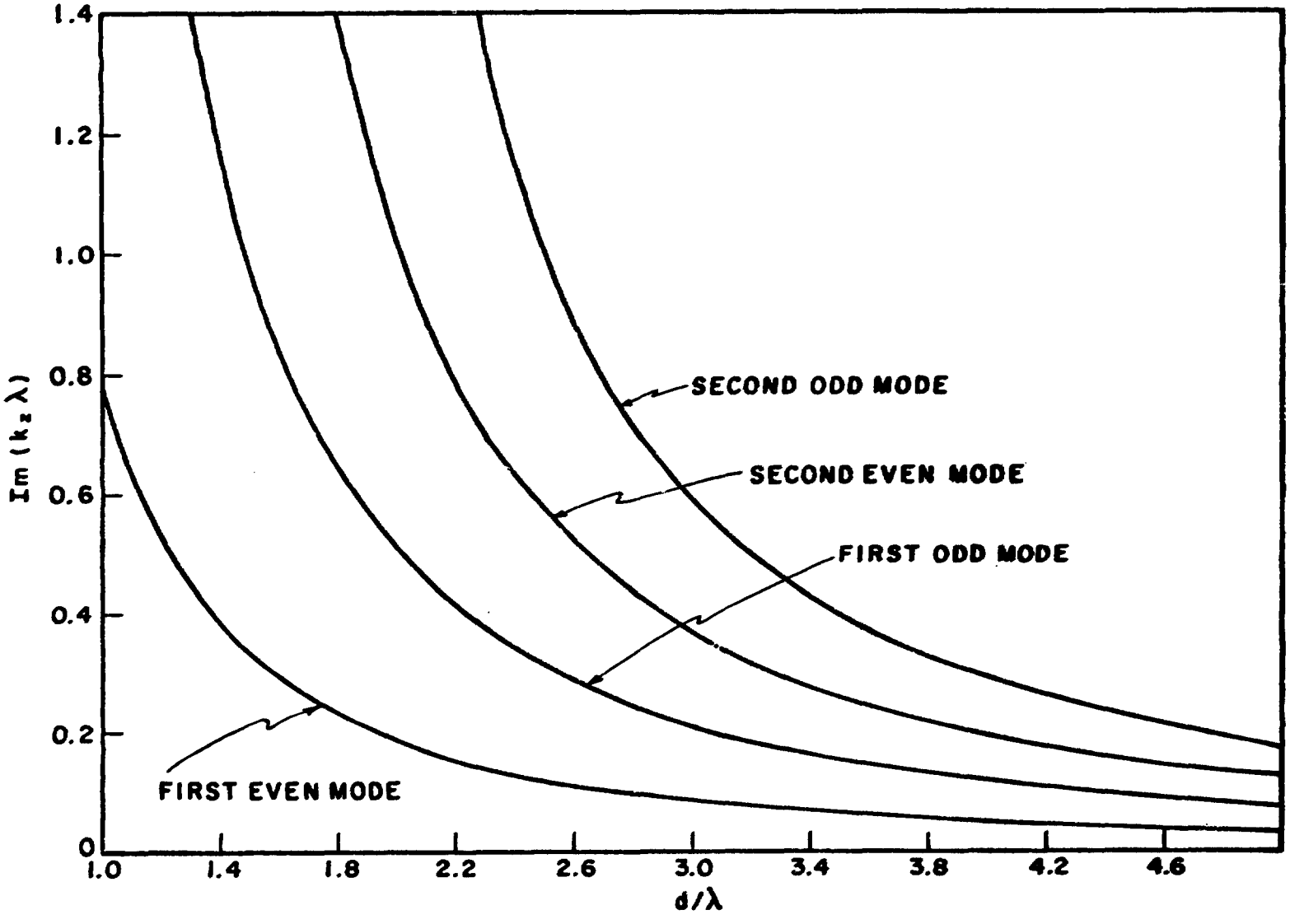

Fig. 13 The normalized attenuation constants of the two lowest even and odd modes on the wires vs. the normalized distance between the wires, ($d/a = 100$ and $d/\lambda > 1$).

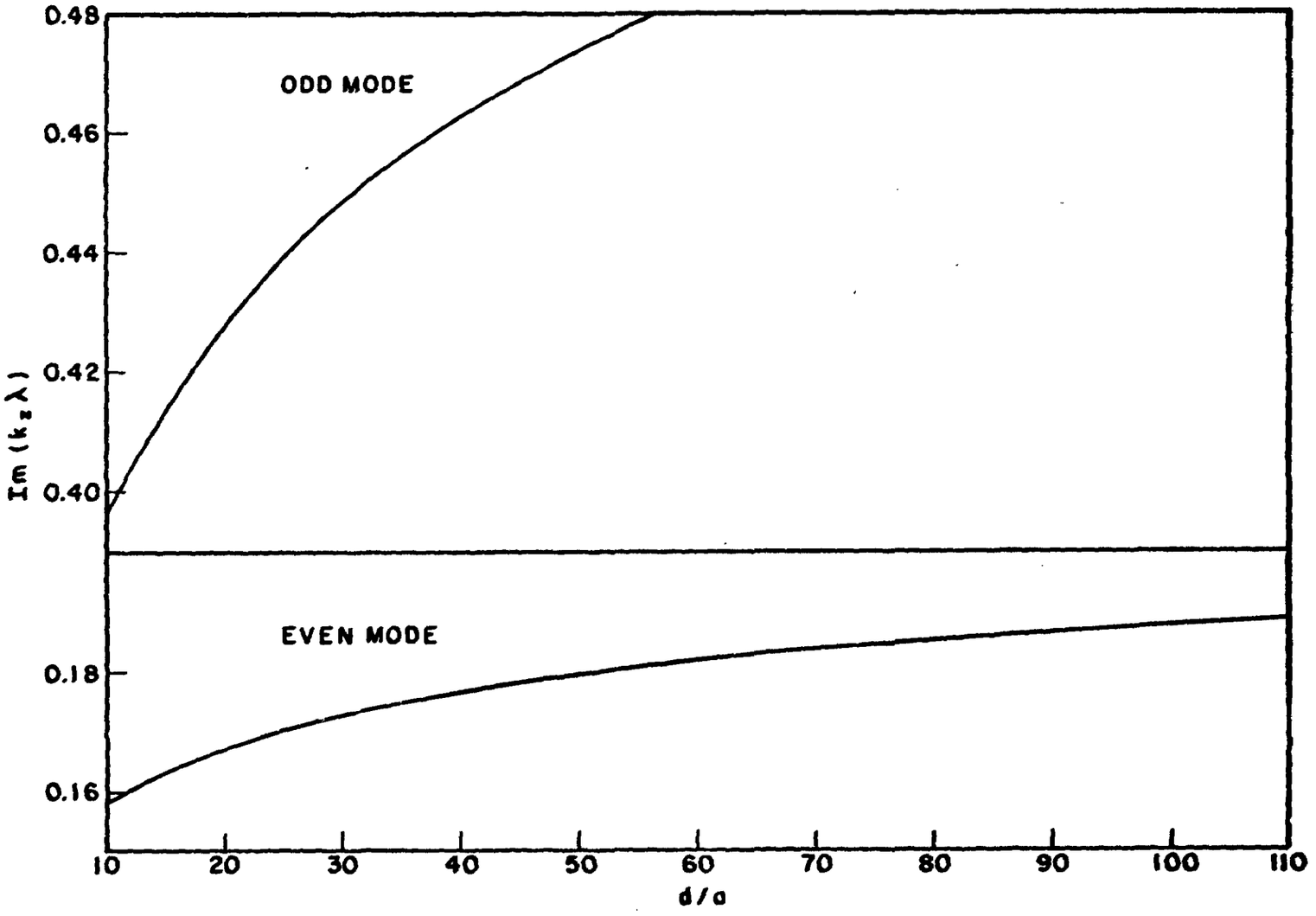

Fig. 14 The normalized attenuation constants of the lowest even and odd modes on the wires vs. the ratio d/a, (d/λ = 2.0).

the z-directed normalized attenuation constants as a function of the ratio d/a for the fixed distance between the wires, $d/\lambda = 2$. The figure shows only the lowest even and odd modes.

Figures 15 and 16 describe, respectively, the variation of the magnitude of the lowest even and odd modes, normalized to the magnitude of the TEM mode as a function of the ratio d/a while the distance d is kept constant. The values are given at $z = 0$. It is important to remember that as we precede along the z axis the higher order modes are attenuated exponentially, while the TEM mode remains constant. For instance, for $d/\lambda = 2.0$ and $a/\lambda = 0.04$ $(d/a = 50)$ we have for the first even mode, which would have the lowest attenuation, at $z = 0$, $\left.\frac{|I_{1\ even}|}{|I_{TEM}|}\right|_{z=0} = 0.744$. However, since for this case $Im(k_z) = \frac{0.179}{\lambda}$, we would have at $z = 5\lambda$ along the wires $\left.\frac{|I_{1\ even}|}{|I_{TEM}|}\right|_{z=5\lambda} = 0.744 \cdot e^{-0.895} = 0.304$ which is only 40% of its initial value. Figures 17-18 and Figures 19-20 show, respectively, variation of the magnitude of the lowest even and odd modes, normalized to the magnitude of the TEM mode as a function of the normalized distance, d/λ, between the wires, when d/a is a parameter and we have chosen to show for $d/a = 10$ and $d/a = 100$. The values are given at $z = 0$ and they are attenuated exponentially as one precedes along the a axis.

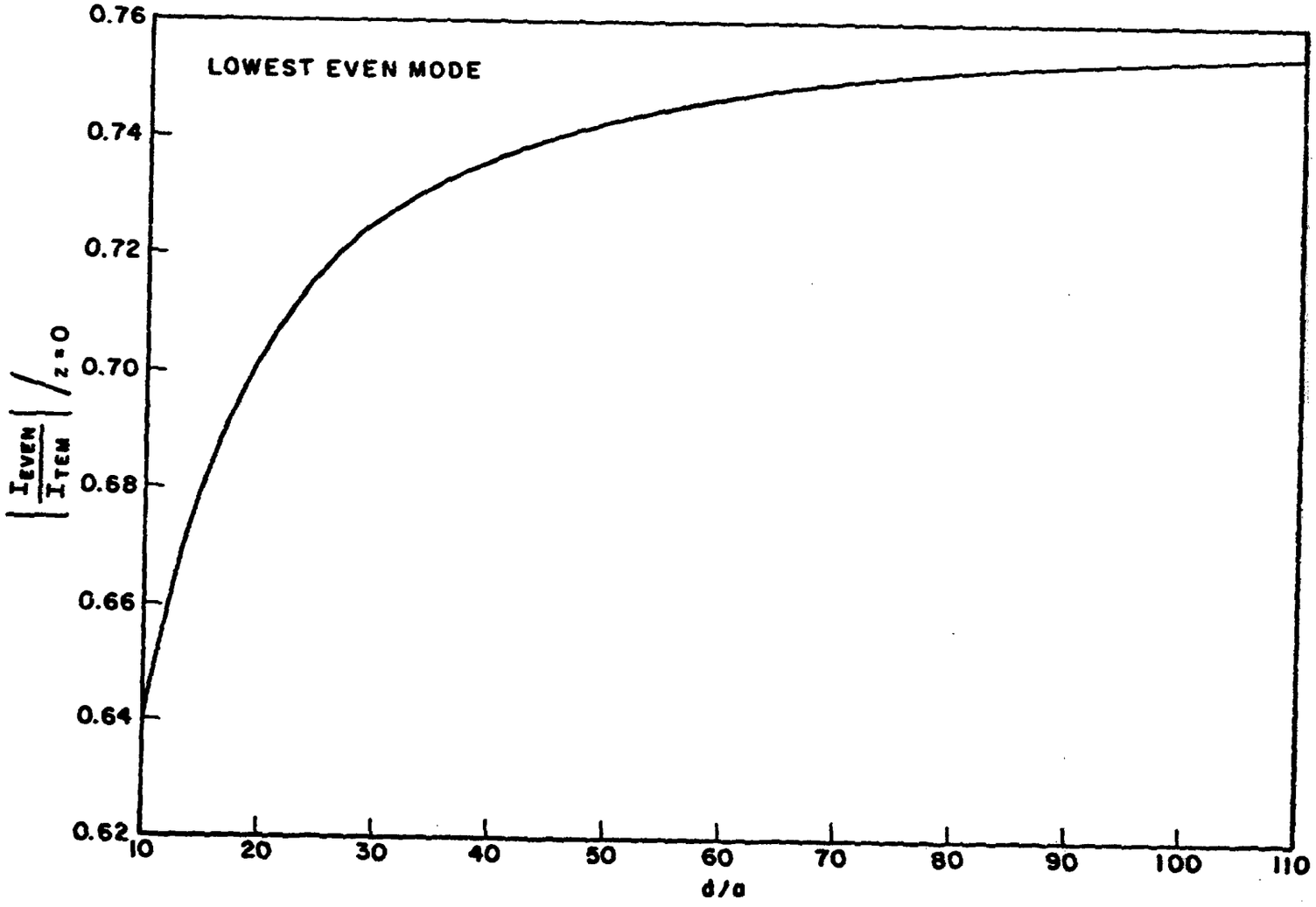

Fig. 15 The lowest even-mode current at z = 0 normalized to the TEM current vs. the ratio d/a ($d/\lambda = 2.0$).

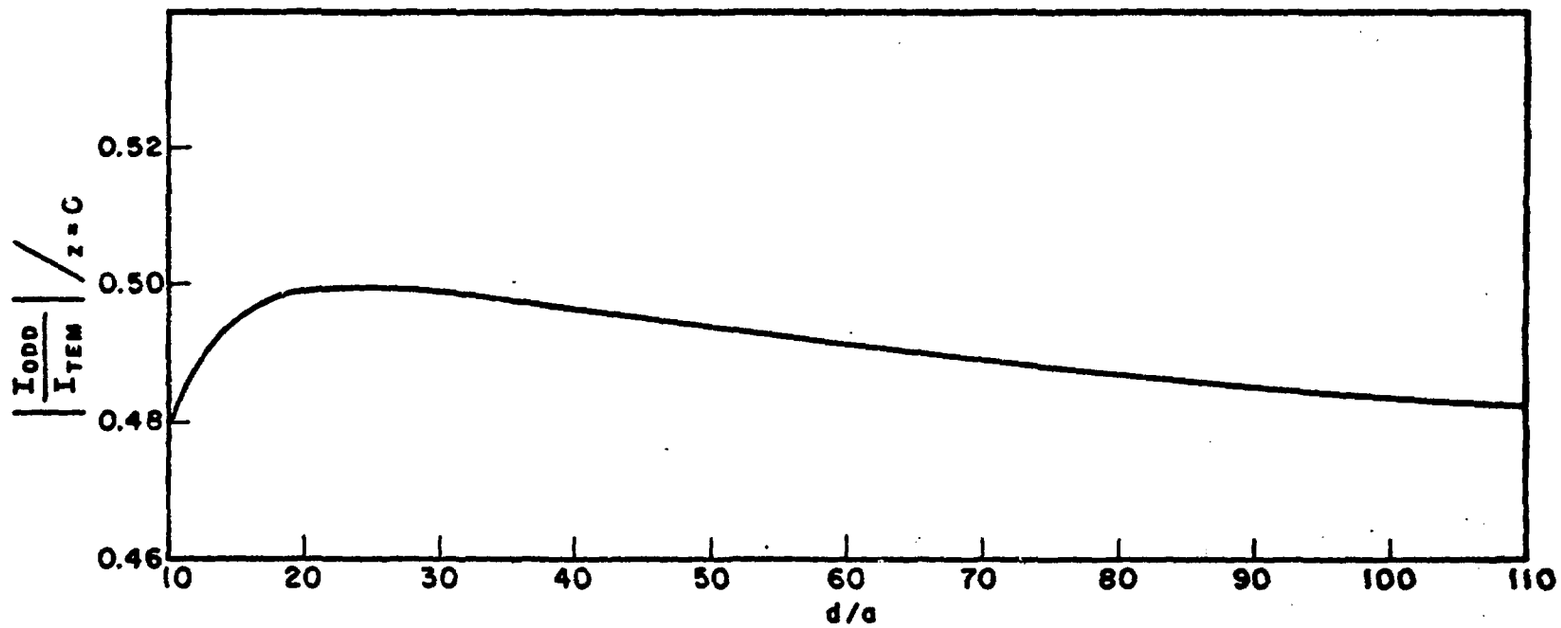

Fig. 16 The lowest odd-mode current at z = 0 normalized to the TEM Current vs. the ratio d/a ($d/\lambda = 2.0$).

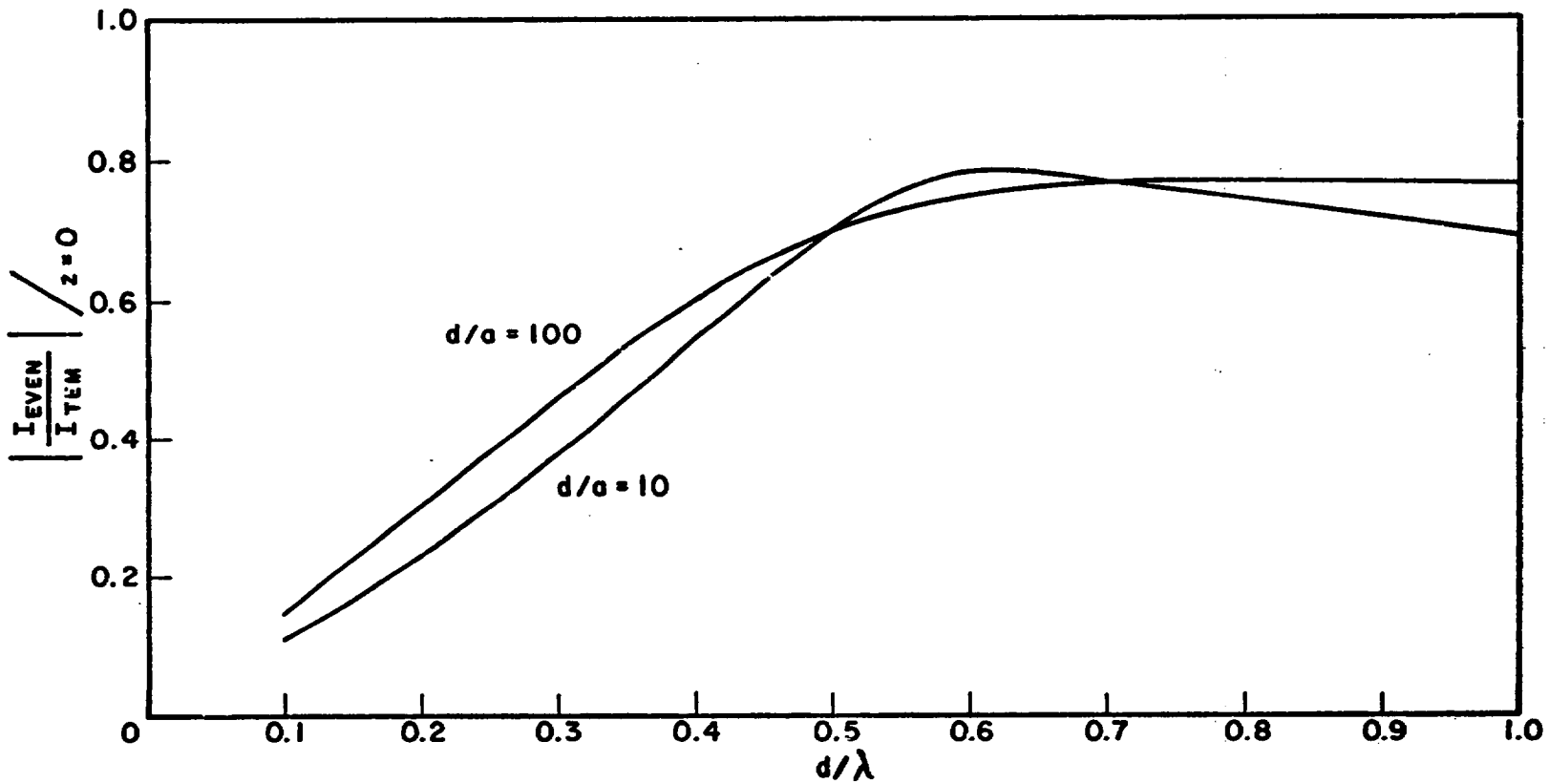

Fig. 17 The lowest even-mode current at z = 0 normalized to the TEM current vs. the normalized distance the wires (d/a = 10,100; d/λ < 1).

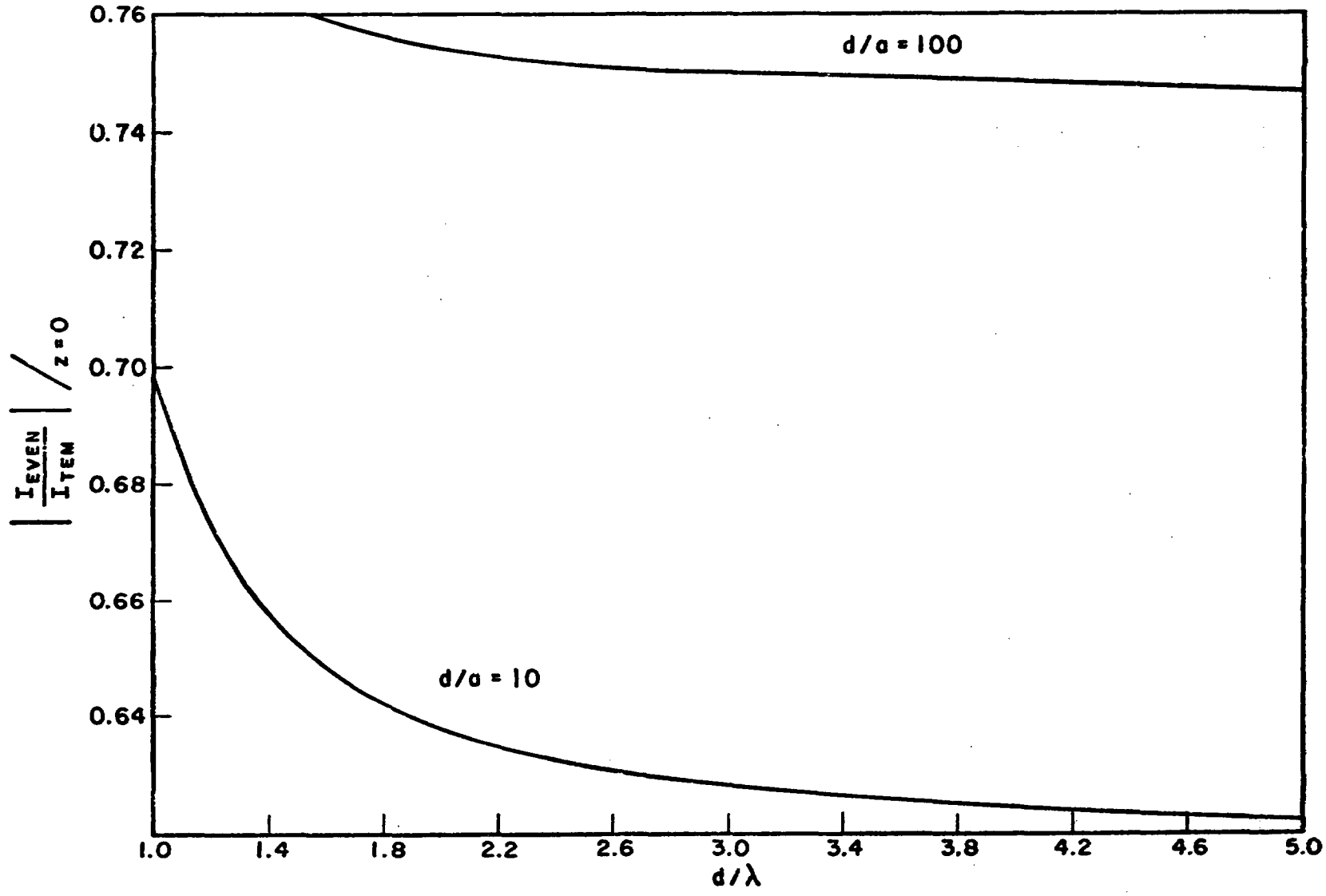

Fig. 18 The lowest even-mode current at z = 0 normalized to the TEM current vs. the normalized distance the wires (d/a = 10,100; d/λ > 1).

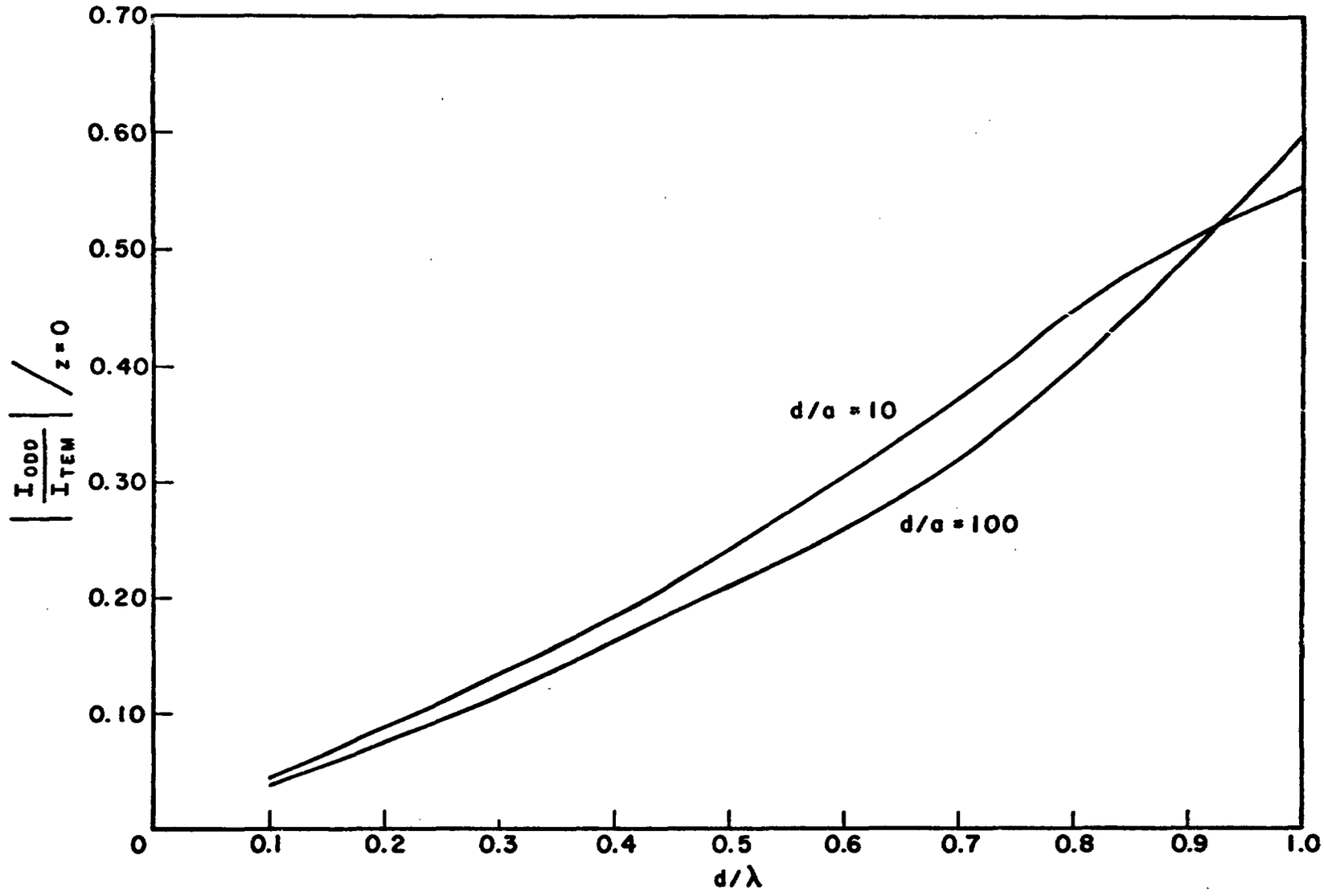

Fig. 19 The lowest odd-mode current at $z = 0$ normalized to the TEM current vs. the normalized distance between the wires ($d/a = 10,100$; $d/\lambda < 1$).

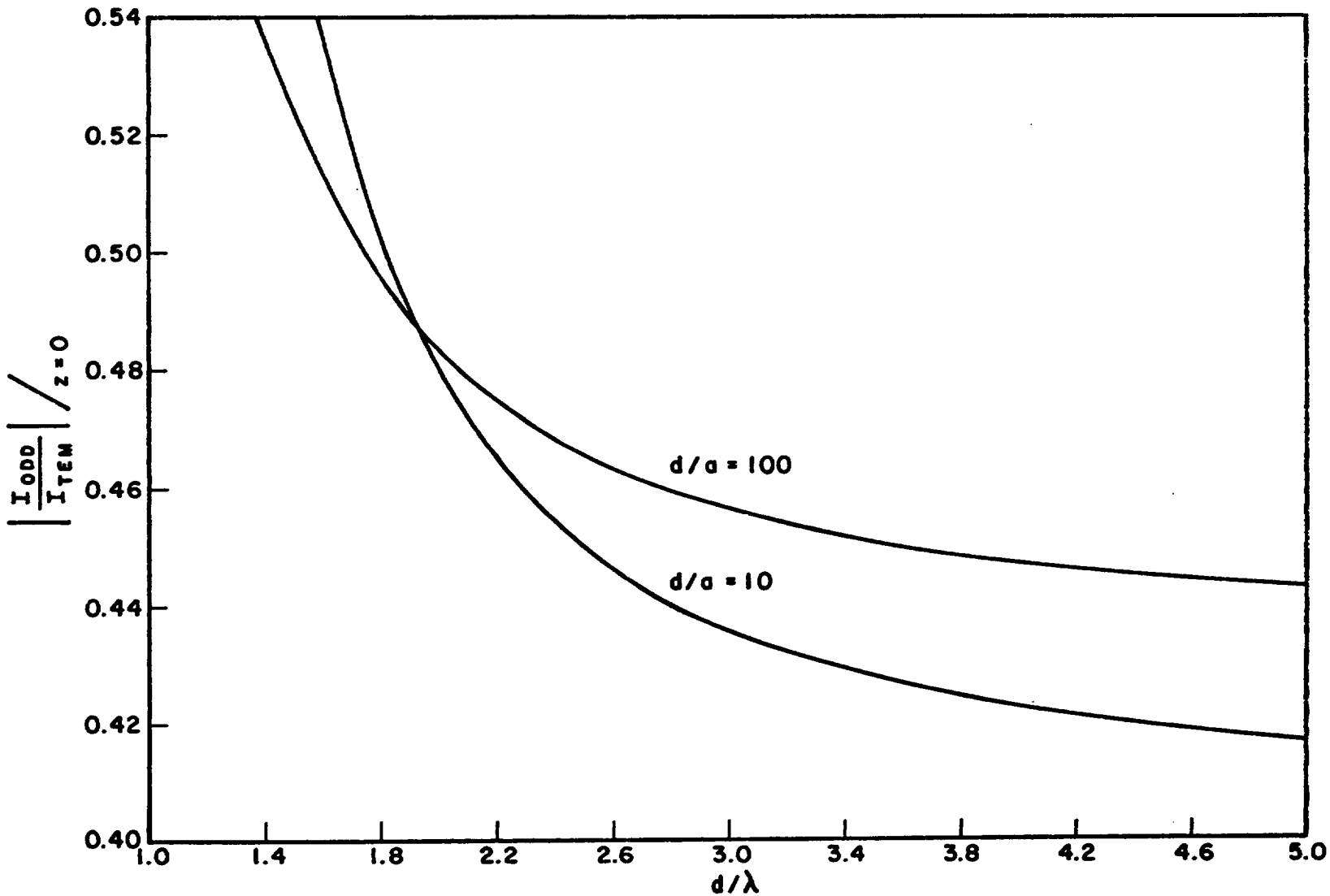

Fig. 20 The lowest odd-mode current at z = 0 normalized to the TEM current vs. the normalized distance between the wires (d/a = 10,100; d/λ > 1).

Appendix A

A1. The Contribution of a Leaky Pole

In this appendix the first term of Equation (39), namely Equation (40), is evaluated. Figure A1 which applies to this calculation is a more detailed version of Figure 4.

The integral around the complex pole, as shown in Figure A1 is given by,

$$I_{p_\pm} = \int_{GHI} \frac{\frac{2\omega\varepsilon}{\pi} \; \bar{E}_z^{inc} \; (x,y,k_z) \; \Big|_{x^2 + y^2 = a^2}}{(k^2 - k_z^2) \; h_\pm(k_z)} \; e^{jk_z z} \; dk_z \qquad \text{(A1)}$$

where

$$h_\pm(k_z) = H_o^{(2)} (\sqrt{k^2 - k_z^2}\, a) \pm H_o^{(2)} (\sqrt{k^2 - k_z^2}\, d) \qquad \text{(A2)}$$

Expanding $h_\pm(k_z)$ in a Taylor series around $k_z = k_{zp\pm}$ one has,

$$h_\pm(k_z) = h_\pm(k_{zp\pm}) + h^{(1)}(k_{zp\pm}) \; (k_z - k_{zp\pm}) + \text{----}$$

$$\text{----} + \frac{h^{(n)}(k_{zp\pm})}{n!} \; (k_z - k_{zp\pm})^n + 0 \; [(k_z - k_{zp\pm})^{n+1}] \qquad \text{(A3)}$$

where $[x]$ means terms of the order of x. For $|k_z - k_{zp}| \to 0$ we may write $h_\pm(k_z)$ explicitly as

$$h_\pm(k_z) = \left[a \; H_1^{(2)}(\sqrt{k^2 - k_{zp\pm}^2}\; a) \pm d \; H_1^{(2)} \; (\sqrt{k^2 - k_{zp\pm}^2}\; d)\right] \frac{k_{zp\pm}}{\sqrt{k^2 - k_{zp\pm}^2}} \; (k_z - k_{zp\pm}) \qquad \text{(A4)}$$

In expression (A4) terms of the order of $(k_z - k_{zp\pm})^2$ have been omitted and we assume that $h^{(1)}(k_{zp\pm}) \neq 0$.

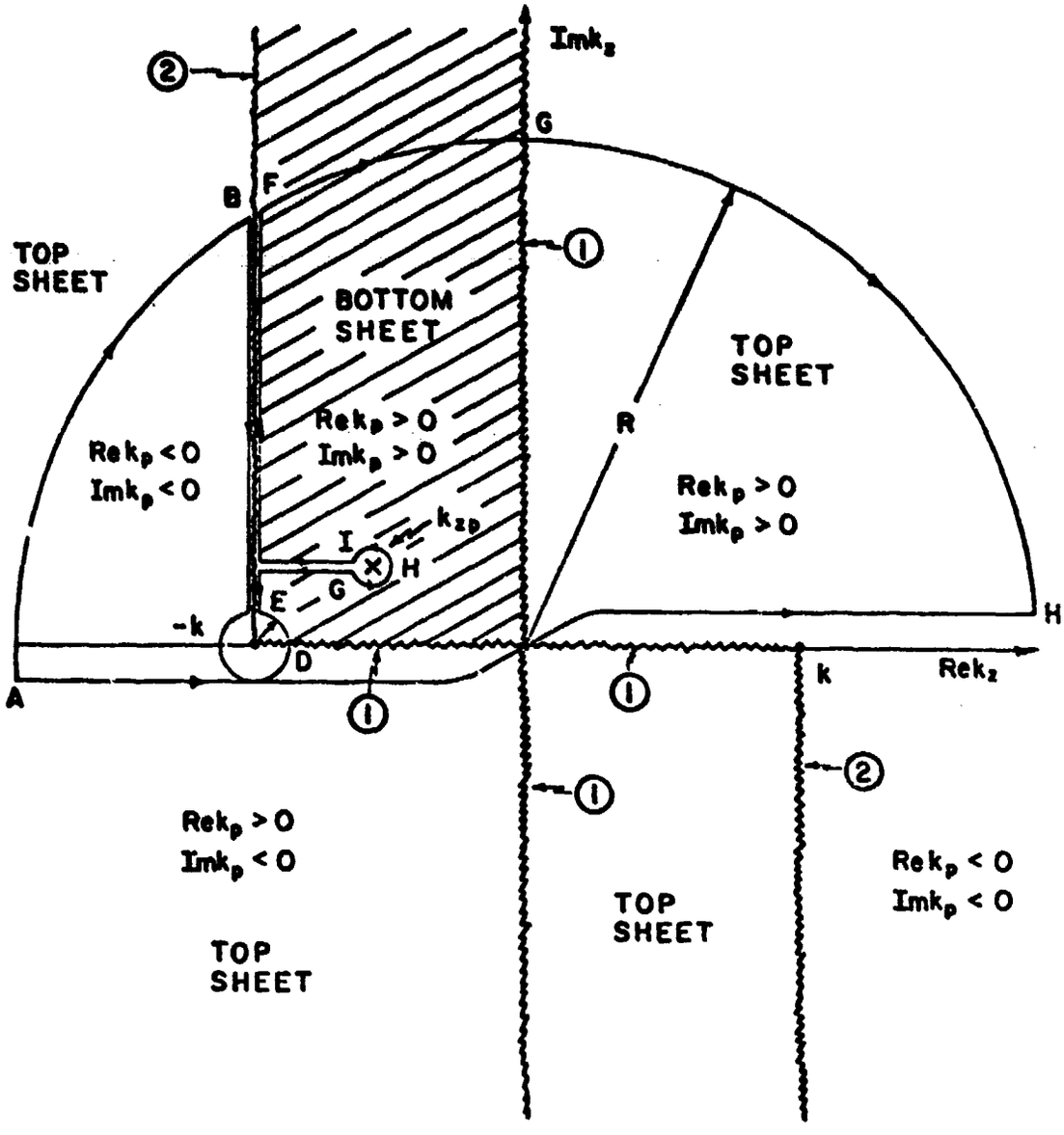

BRANCH CUTS WHICH SEPARATE THE BOTTOM SHEET FROM THE TOP SHEET.

BRANCH CUTS WHICH ARE ACTUALLY USED IN OUR INTEGRATION.

Fig. A1. Illustration of the contours in the k_z plane.

Also, $H_1^{(2)}$ is the Hankel function of the second kind of first order, and we have used the relation

$$\frac{d}{dx} H_o^{(2)}(x) = -H_1^{(2)}(x)$$

Using the residue theorem the integral in Equation (A1) results in the residue at the simple pole $k = k_{zp\pm}$. Thus we have,

$$I_{P_\pm} = \frac{4j}{\eta} \frac{k}{\sqrt{k^2 - k_{zp\pm}^2}} \frac{\bar{E}_z^{inc}(x,y,k_{zp})\Big|_{x^2+y^2=a^2}}{k_{zp\pm}\left[(a\, H_1^{(2)}(\sqrt{k^2 - k_{zp\pm}^2}\, a) \pm j\, H_1^{(2)}(\sqrt{k^2 - k_{zp\pm}^2}\, d)\right]} e^{jk_{zp\pm}z} \tag{A5}$$

where

$$\eta = \left(\frac{\mu}{\varepsilon}\right)^{1/2}$$

Substituting $k_{\rho p\pm}$ $(= \sqrt{k^2 - k_{zp\pm}^2})$ into (A5) one readily obtains Equation (40).

A2. The Contribution of the Branch Point

In this appendix the contribution of the branch point, namely Equation (41), is evaluated.

The integral around the branch point, as shown in Figure A1, is given by,

$$I_{\pm}^{CDE} = \int_{CDE} \frac{\frac{2\omega\varepsilon}{\pi} \bar{E}_{z_{\pm}}^{inc}(x,y,k_z) \Big|_{x^2+y^2=a^2}}{(k^2 - k_z^2)\,[H_o^{(2)}(\sqrt{k^2 - k_z^2}\,a) \pm H_o^{(2)}(\sqrt{k^2 - k_z^2}\,d)]} \, e^{jk_z z}\, dk_z \tag{A6}$$

By changing the variable of integration to

$$k_z = -k + \varepsilon e^{j\theta} \tag{A7}$$

where θ varies from $-\frac{3\pi}{2}$ to $\frac{\pi}{2}$, we obtain

$$k^2 - k_z^2 = (k + k_z)\,(k - k_z) = \varepsilon e^{j\theta}\,(2k - \varepsilon e^{j\theta}) \tag{A8}$$

In the limit where $\varepsilon \to 0$ we have,

$$\bar{E}_z^{inc}(x,y,k_z)\Big|_{x^2+y^2=a^2} \to \bar{E}_z^{inc}(x,y,-k)\Big|_{x^2+y^2=a^2} \tag{A9}$$

$$k^2 - k_z^2 \to 2k\varepsilon e^{j\theta} \tag{A10}$$

$$\sqrt{k^2 - k_z^2} \to \sqrt{2k\varepsilon e^{j\theta}} \tag{A11}$$

$$H_o^{(2)}(\sqrt{k^2 - k_z^2}\,a) \to 1 - j\frac{2}{\pi}\,\ell n\left[\frac{\gamma\sqrt{2k\varepsilon}\;e^{j\frac{\theta}{2}}\,a}{2}\right] \tag{A12}$$

$$H_o^{(2)}(\sqrt{k^2 - k_z^2}\,d) \to 1 - j\frac{2}{\pi}\,\ell n\left[\frac{\gamma\sqrt{2k\varepsilon}\;e^{j\frac{\theta}{2}}\,a}{2}\right] \tag{A13}$$

Substituting Equations (A9-A13) in Equation (6), we obtain $I_{+}^{DEF} = 0$ (A14)

i.e., zero contribution for symmetrical excitation, and,

$$I_{-}^{DEF} = \frac{2\omega\epsilon}{\pi} \; \bar{E}_z^{inc} \; (x,y,-k) \Big|_{x^2 + y^2 = a^2} e^{-jkz} \int_{-\frac{3\pi}{2}}^{\frac{\pi}{2}} \frac{1}{2k\epsilon \; e^{j\theta} \; (+j\frac{2}{\pi} \; \ell n \; \frac{d}{a})} j\epsilon \; e^{j\theta} d\theta$$

$$= \frac{\pi}{\eta \; \ell n(\frac{d}{a})} \; \bar{E}_z^{inc} \; (x,y,-k) \Big|_{x^2 + y^2 = a^2} e^{-jkz} \qquad \text{(A15)}$$

where

$$\eta = (\frac{\mu}{\epsilon})^{1/2}$$

It is easily seen that Equation (A15) can be written in the explict form,

$$I_{-}^{DEF} = (Z_o)^{-1} \; \bar{E}_z^{inc} \; (x,y,-k) \Big|_{x^2 + y^2 = a^2} e^{-jkz} \qquad \text{(A16)}$$

Where $Z_o = \frac{\eta}{\pi} \; \ell n \; (\frac{d}{a})$ is the characteristic impedance of the two-wire line as given by [9].

A3. The Contribution of the Branch Cut

In this appendix the contribution of the branch cut is evaluated.

In the bottom sheet we have,

$$I_{\pm}^{EF} = \int_{EF} \frac{\frac{2\omega\varepsilon}{\pi} \bar{E}_{z_{\pm}}^{inc}(x,y,k_z)\Big|_{x^2+y^2=a^2}}{(k^2 - k_z^2)\,[H_o^{(2)}(\sqrt{k^2-k_z^2}\,a) \pm H_o^{(2)}(\sqrt{k^2-k_z^2}\,d)]}\, e^{jk_z z}\, dk_z \tag{A17}$$

By changing the variable of integration to

$$k_z = -k + ju \tag{A18}$$

where u varies from ε to R, one obtains,

$$k^2 - k_z^2 = (k + k_z)(k - k_z) = ju(2k - ju) = u^2 + juk = u^2(1 + j\frac{\phi}{u}) \tag{A19}$$

$$\sqrt{k^2 - k_z^2} = u\sqrt{1 + j\frac{k}{u}} = u(1 + \frac{k^2}{u^2})^{1/2}\, e^{j\frac{\phi}{2}} \tag{A20}$$

where

$$\phi = \tan^{-1}\frac{k}{u}$$

Taking the limit where $\varepsilon \to 0$ and $R \to \infty$ Equation (A17) results in

$$I_{\pm}^{EF} = \lim_{\substack{\varepsilon \to 0 \\ R \to \infty}} \int_{\varepsilon}^{R} \frac{\frac{2\omega\varepsilon}{\pi} \bar{E}_{z_{\pm}}^{inc}(x,y,-k+ju)\Big|_{x^2+y^2=a^2} e^{-jkz}\, e^{-uz}}{u^2(1 + j\frac{k}{u})\,\{H_o^{(2)}[u(1+\frac{k^2}{u^2})^{1/2} e^{j\phi/2} a] + H_o^{(2)}[u(1+\frac{k^2}{u^2})^{1/2} e^{j\phi/2} d]\}}\, j\,du \tag{A21}$$

In the top sheet we have,

$$I_{\pm}^{BC} = \int_{BC} \frac{\frac{2\omega\varepsilon}{\pi} \bar{E}_{z_{\pm}}^{inc}(x,y,k_z)\Big|_{x^2+y^2=a^2}}{(k^2 - k_z^2)\,[H_o^{(2)}(\sqrt{k^2-k_z^2}\,a) \pm H_o^{(2)}(\sqrt{k^2-k_z^2}\,d)]}\, e^{jk_z z}\, dk_z \tag{A22}$$

By changing the variable of integration in the same way as Equation (A18) where u varies from R to ε, one obtains

$$k^2 - k_z^2 = u^2(1 + j\frac{k}{u}) \tag{A23}$$

$$\sqrt{k^2 - k_z^2} = -u(1 + \frac{k^2}{u^2})^{1/2} e^{j\frac{\phi}{2}} \tag{A24}$$

where $\phi = \tan^{-1} \frac{k}{u}$

Taking the limit where $\varepsilon \to 0$ and $R \to \infty$ equation (A22) results in

$$I_{\pm}^{BC} =$$

$$\lim_{\substack{\varepsilon \to 0 \\ R \to \infty}} \int_R^{\varepsilon} \frac{\frac{2\omega\varepsilon}{\pi} \bar{E}_z^{inc}(x,y,-k + ju) \Big|_{x^2 + y^2 = a^2} e^{-jkz} e^{-uz}}{u^2 (1 + j\frac{k}{u}) \{ H_o^{(2)}[-u(1 + \frac{k^2}{u^2})^{1/2} e^{j\phi/2} a] \pm H_o^{(2)}[-u(1 + \frac{k^2}{u^2})^{1/2} e^{j\phi/2} d]\}} jdu \tag{A25}$$

Appendix B

The Method for Finding the Roots of Equation (38)

A well known and proven method for finding the roots of equation (38), is that of the steepest decent. Equation (38) may be modified using a real function h_{abs} in the following fashion,

$$h_{abs_{\pm}}(k_z) = \left| h_{\pm}(k_z) \right| = 0 \tag{B1}$$

where $h_{\pm}(k_z)$ is given by Equation (A2) and k_z the z-directed axial wave number may be cast into the vector form

$$\vec{k}_z = \begin{bmatrix} \beta_z \\ \alpha_z \end{bmatrix} \tag{B2}$$

where β_z and α_z are the real and imaginary parts of k_z, respectively.

The search by this method starts with initial value $\vec{k}_{zo}$ for the wave number vector. The normalized gradient of the absolute value of $h_{\pm}(k_z)$, obtained by differentiating (B1):

$$\vec{V}_{\pm} = \begin{bmatrix} \text{Sign}\left(\dfrac{\partial h_{abs_{\pm}}(k_z)}{\partial \beta_z}\right) \\ \\ \text{Sign}\left(\dfrac{\partial h_{abs_{\pm}}(k_z)}{\alpha_z}\right) \end{bmatrix} \tag{B3}$$

is measured and the vector $\vec{k}_z$ is altered, in accordance with the negative of the value obtained. This procedure is repeated causing the value of $h_{abs_{\pm}}$ to be successively reduced and the $\vec{k}_z$ vector to approach the root of Equation (B1).

For convenience, the + and - subscripts will be omitted in the following discussion. The method can be described by the relation

$$\vec{k}_{z_{k+1}} = \vec{k}_{z_k} - [\mu_k]\vec{V}_k \tag{B4}$$

where

$$\vec{\nabla}_k = \begin{bmatrix} \nabla_k^1 \\ \\ \nabla_k^2 \end{bmatrix} = \begin{bmatrix} \text{Sign}\left(\dfrac{\partial h_{abs}(k_z)}{\partial \beta_z}\right) \\ \\ \text{Sign}\left(\dfrac{\partial h_{abs}(k_z)}{\partial \alpha_z}\right) \end{bmatrix} \Bigg|_{k_z = k_{z_k}} \tag{B5}$$

$$\text{Sign}\ (z) = \begin{bmatrix} 1 & x \geq 0 \\ -1 & x < 0 \end{bmatrix}$$

is the normalized gradient at a point in the k_z plane corresponding to $k_z = k_{z_k}$ and

$$[\mu_k] = \begin{bmatrix} 3/4 + 1/4\ \nabla_{k-1}^1\ \nabla_k^1 & 0 \\ \\ 0 & 3/4 + 1/4\ \nabla_{k-1}^1\ \nabla_k^2 \end{bmatrix} \underset{\sim}{\mu} k - 1 \tag{B6}$$

is a matrix that together with an initial matrix $[\mu_o]$ control stability and rate of convergence.

This method is suitable for our purpose, since we are interested only in leaky modes having the smallest attenuation in the z direction. Thus, we are allowed to sea ch for the zeros within a rectangular region of the second quadrant in the complex k_z (= $\beta_z + i\alpha_z$) plane, which is defined by

$$0 < \beta_z < k \qquad 0 < \alpha_z << k \tag{B7}$$

The absolute value of the complex function Equation (B1) is reduced to less than 10^{-6} at the location of a root.

Appendix C

Program Listings and Output Samples

The first two programs calculate the induced currents in the case of a plane wave excitation. The first program varies the distance between the wires d (in wavelengths) while keeping the ratio d/a constant. The second program varies the ratio d/a while keeping the distance between the wires constant.

The following four programs find the real and imaginary parts of the wave numbers associated with higher order modes in the case of volt excitation, and calculate the contribution of each mode to the total current. The first program varies the distance between the wires, while keeping the ratio d/a constant, for the even leaky modes and the second carries it out for the odd leaky modes. The third program varies the ratio d/a, while keeping the distance between the wires constant, for the even leaky modes and the fourth carries it out for the odd modes.

Program No. 1

```
C       ..................................................
C       THE PURPOSE OF THIS PROGRAM IS TO CALCULATE THE
C       INDUCED CURRENTS IN THE CASE OF A PLANE WAVE
C       EXCITATION.
C       THE PROGRAM  VARIES THE DISTANCE BETWEEN THE WIRES-
C       "D"-(IN WAVELENGTHS) WHILE KEEPING THE RATIO  "D/A"
C       CONSTANT
C       ..................................................
        COMPLEX KA,KD,CO,CE,CU1
        COMPLEX HOA,HOD,JOA,JOD,YOA,YOD
        COMPLEX CU2
        REAL K,IJOA,IYOA,IJOD,IYOD
C
C       THE RATIO "D/A"
C
        M=100
        WRITE(5,50) M
50      FORMAT(///,1X,' D/A IS  ',I4,///)
        PI=3.1415927
        K=2.*PI
C
C       THE VERTICAL AND AZIMUTHAL ANGLES OF THE
C       INCIDENT WAVE
C
        Q=PI/4
        PY=PI/4
C
C       INITIAL VALUE FOR THE DISTANCE-D
C
        D=0.1
10      A=D/M
        IF(D.GT.5.00) GO TO 20
        WRITE (5,40) D
40      FORMAT(/,1X,'D IS ',F6.4)
        KA=K*A*SIN(Q)*(1.,0.)
        KD=KA*M
        CALL CBESO(KA ,JOA,YOA)
        CALL CBESO(KD ,JOD,YOD)
        RJOA=REAL(JOA)
        IJOA=AIMAG(JOA)
        RYOA=REAL(YOA)
        IYOA=AIMAG(YOA)
        RJOD=REAL(JOD)
        IJOD=AIMAG(JOD)
        RYOD=REAL(YOD)
        IYOD=AIMAG(YOD)
C
C       THE RELATIVE CONTRIBUTION OF THE EVEN AND ODD PARTS
C       AND THE TOTAL CURRENT INDUCED ON THE WIRES
C
        HOA=CMPLX(RJOA+IYOA,IJOA-RYOA)
        HOD=CMPLX(RJOD+IYOD,IJOD-RYOD)
        CE=2./377./K/SIN(Q)* (1+CEXP((0.,1.)*KD*SIN(PY)))/(HOA+HOD)
        CO=2./377./K/SIN(Q)* (1-CEXP((0.,1.)*KD*SIN(PY)))/(HOA-HOD)
        CU1=CE+CO
        ACU1=CABS(CU1)
```

```
      RAT=CABS(CE/CO)
      WRITE(5,30)ACU1,RAT
30    FORMAT(1X,'CURRENT 1 IS'  ,E15.8,/,1X,'EVEN/ODD  IS',E15.8
      CU2=CE-CO
      ACU2=CABS(CU2)
      WRITE(5,37)ACU2
37    FORMAT(1X,'CURRENT 2 IS',E15.8)
      RAT1=ACU1/ACU2
      WRITE(5,38) RAT1
38    FORMAT(1X,'CUR1/CUR2 IS',E15.8,///)
C
C     CHANGING THE DISTANCE-D
C
      D=D+0.1
      GO TO 10
20    CONTINUE
      STOP
      END
C
C     THE SUBROUTINE CBESO  CALCULATES THE ZERO ORDER BESSEL
C     FUNCTIONS FOR A GIVEN INPUT VARIABLE Z
C
      SUBROUTINE CBESO(Z,BSJO,BSYO)
      COMPLEX Z,BSJO,BSYO,Y,W,PO,FO,CEXP
      COMPLEX CCOS,CSIN,CSQRT,CLOG,SPO,SQO,QO,CS,SN,SP1,SQ1
      PI=3.141593
      A=CABS(Z)
      BSJO=(1.,0.)
      IF(A.EQ.0.) GO TO 2
      IF(A.GT.3.) GO TO 1
      Y=Z*Z/9.
      BSJO=1.+Y*(-2.2499997+Y*(1.2656208+Y*(-.3163866
     1+Y*(.0444479+Y*(-.0039444+Y*.00021)))))
      GO TO 2
1     W=3./Z
      FO=.79788456+W*(-.00000077+W*(-.0055274+W*(-.00009512
     1+W*(.00137237+W*(-.00072805+W*.00014476)))))
      PO=.78539816+W*(.04166397+W*(.00003954+W*(-.00262573
     1+W*(.00054125+W*(.00029333-W*.00013558)))))
      BSJO=FO*CCOS(Z-PO)/CSQRT(Z)
2     CONTINUE
      BSYO=(-1.E30,0)
      IF(A.EQ.0.) GO TO 3
      IF(A.GT.3.) GO TO 4
      BSYO=.63661977*CLOG(.5*Z)*BSJO+.36746691+Y*(.60559366
     1+Y*(-.74350384+Y*(.25300117+Y*(-.04261214+Y*(.00427916
     2-Y*.00024846)))))
      GO TO 3
4     CONTINUE
      BSYO=FO*CSIN(Z-PO)/CSQRT(Z)
3     CONTINUE
      RETURN
      END
```

Output Samples for Program No. 1

```
D/A IS     10


D IS   .1000
CURRENT 1 IS 0.62013944E-03
EVEN/ODD  IS 0.29726247E+01
CURRENT 2 IS 0.89227682E-03
CUR1/CUR2 IS 0.69500791E+00


D IS   .2000
CURRENT 1 IS 0.71889397E-03
EVEN/ODD  IS 0.20512333E+01
CURRENT 2 IS 0.12857444E-02
CUR1/CUR2 IS 0.55912665E+00


D IS   .3000
CURRENT 1 IS 0.81891406E-03
EVEN/ODD  IS 0.17458486E+01
CURRENT 2 IS 0.16215614E-02
CUR1/CUR2 IS 0.50501576E+00


D IS   .4000
CURRENT 1 IS 0.95810231E-03
EVEN/ODD  IS 0.15963233E+01
CURRENT 2 IS 0.19070078E-02
CUR1/CUR2 IS 0.50241131E+00


D IS   .5000
CURRENT 1 IS 0.11598827E-02
EVEN/ODD  IS 0.14861194E+01
CURRENT 2 IS 0.21185441E-02
CUR1/CUR2 IS 0.54749046E+00


D IS   .6000
CURRENT 1 IS 0.14269433E-02
EVEN/ODD  IS 0.13361567E+01
CURRENT 2 IS 0.21764565E-02
CUR1/CUR2 IS 0.65562683E+00
```

Program No. 2

```
C       ..................................................
C       THE PURPOSE OF THIS PROGRAM IS TO CALCULATE THE
C       INDUCED CURRENTS IN THE CASE OF A PLANE WAVE
C       EXCITATION.
C       THE PROGRAM VARIES THE RATIO-"D/A",WHILE KEEPING
C       THE DISTANCE BETWEEN THE WIRES-"D" CONSTANT
C       ..................................................
        COMPLEX KA,KD,CO,CE,CU1
        COMPLEX HOA,HOD,JOA,JOD,YOA,YOD
        COMPLEX CU2
        REAL K,IJOA,IYOA,IJOD,IYOD
C
C       INITIAL VALUE FOR THE RATIO "D/A"
C
        M=10
        PI=3.1415927
        K=2.*PI
C
C       THE VERTICAL AND AZIMUTHAL ANGLES OF THE
C       INCIDENT WAVE
C
        Q=PI/4
        PY=PI/4
C
C       THE DISTANCE BETWEEN THE WIRES
C
        D=2.5
        WRITE (5,40) D
40      FORMAT(/,1X,'D IS ',F6.4)
10      A=D/M
        IF(M.GT.1000) GO TO 20
        WRITE(5,50) M
50      FORMAT(///,1X,' D/A IS  ',I4)
        KA=K*A*SIN(Q)*(1.,0.)
        KD=KA*M
        CALL CBESO(KA ,JOA,YOA)
        CALL CBESO(KD ,JOD,YOD)
        RJOA=REAL(JOA)
        IJOA=AIMAG(JOA)
        RYOA=REAL(YOA)
        IYOA=AIMAG(YOA)
        RJOD=REAL(JOD)
        IJOD=AIMAG(JOD)
        RYOD=REAL(YOD)
        IYOD=AIMAG(YOD)
        HOA=CMPLX(RJOA+IYOA,IJOA-RYOA)
        HOD=CMPLX(RJOD+IYOD,IJOD-RYOD)
C
C       THE RELATIVE CONTRIBUTION OF THE EVEN AND ODD PARTS
C       AND THE TOTAL CURRENT INDUCED ON THE WIRES
C
        CE=2./377./K/SIN(Q)* (1+CEXP((0.,1.)*KD*SIN(PY)))/(HOA+HOD)
        CO=2./377./K/SIN(Q)* (1-CEXP((0.,1.)*KD*SIN(PY)))/(HOA-HOD)
        CU1=CE+CO
        ACU1=CABS(CU1)
        RAT=CABS(CE/CO)
```

```
      WRITE(5,30)ACU1,RAT
30    FORMAT(1X,'CURRENT 1 IS'  ,E15.8,/,1X,'EVEN/ODD  IS',E15.8
      CU2=CE-CO
      ACU2=CABS(CU2)
      WRITE(5,37)ACU2
37    FORMAT(1X,'CURRENT 2 IS',E15.8)
      RAT1=ACU1/ACU2
      WRITE(5,38) RAT1
38    FORMAT(1X,'CUR1/CUR2 IS',E15.8,///)
C
C     CHANGING THE RATIO 'D/A'
C
      M=M+1
      GO TO 10
20    CONTINUE
      STOP
      END
C
C     THE SUBROUTINE CBES0  CACULATES THE ZERO ORDER BESSEL
C     FUNCTIONS FOR A GIVEN INPUT VARIABLE Z.
C
      SUBROUTINE CBES0(Z,BSJ0,BSY0)
      COMPLEX Z,BSJ0,BSY0,Y,W,P0,F0,CEXP
      COMPLEX CCOS,CSIN,CSQRT,CLOG,SP0,SQ0,Q0,CS,SN,SP1,SQ1
      PI=3.141593
      A=CABS(Z)
      BSJ0=(1.,0.)
      IF(A.EQ.0.) GO TO 2
      IF(A.GT.3.) GO TO 1
      Y=Z*Z/9.
      BSJ0=1.+Y*(-2.2499997+Y*(1.2656208+Y*(-.3163866
     1+Y*(.0444479+Y*(-.0039444+Y*.00021)))))
      GO TO 2
1     W=3./Z
      F0=.79788456+W*(-.00000077+W*(-.0055274+W*(-.00009512
     1+W*(.00137237+W*(-.00072805+W*.00014476)))))
      P0=.78539816+W*(.04166397+W*(.00003954+W*(-.00262573
     1+W*(.00054125+W*(.00029333-W*.00013558)))))
      BSJ0=F0*CCOS(Z-P0)/CSQRT(Z)
2     CONTINUE
      BSY0=(-1.E30,0)
      IF(A.EQ.0.) GO TO 3
      IF(A.GT.3.) GO TO 4
      BSY0=.63661977*CLOG(.5*Z)*BSJ0+.36746691+Y*(.60559366
     1+Y*(-.74350384+Y*(.25300117+Y*(-.04261214+Y*(.00427916
     2-Y*.00024846)))))
      GO TO 3
4     CONTINUE
      BSY0=F0*CSIN(Z-P0)/CSQRT(Z)
3     CONTINUE
      RETURN
      END
```

Output Sample for Program No. 2

```
D IS 2.5000


 D/A IS     10
CURRENT 1 IS 0.40766686E-02
EVEN/ODD  IS 0.16611102E+01
CURRENT 2 IS 0.28035670E-02
CUR1/CUR2 IS 0.14541007E+01


 D/A IS     11
CURRENT 1 IS 0.38489985E-02
EVEN/ODD  IS 0.15495998E+01
CURRENT 2 IS 0.25438033E-02
CUR1/CUR2 IS 0.15130881E+01


 D/A IS     12
CURRENT 1 IS 0.36601041E-02
EVEN/ODD  IS 0.14625690E+01
CURRENT 2 IS 0.23561873E-02
CUR1/CUR2 IS 0.15534011E+01


 D/A IS     13
CURRENT 1 IS 0.35007314E-02
EVEN/ODD  IS 0.13933954E+01
CURRENT 2 IS 0.22162317E-02
CUR1/CUR2 IS 0.15796775E+01


 D/A IS     14
CURRENT 1 IS 0.33646415E-02
EVEN/ODD  IS 0.13374328E+01
CURRENT 2 IS 0.21086818E-02
CUR1/CUR2 IS 0.15956137E+01
```

Program No. 3

```
C       ..............................................................
C       THE PURPOSES OF THIS PROGRAM ARE:
C       1) TO FIND THE REAL AND IMAGINARY PARTS OF THE R-DIRECTED
C          AND Z-DIRECTED WAVE NUMBERS,ASSOCIATED WITH THE HIGHER
C          ORDER EVEN LEAKY MODES IN THE CASE OF VOLT EXCITATION
C       2) TO CALCULATE THE CONTRIBUTION OF EACH MODE TO THE TOTAL
C          CURRENT.
C       THE PROGRAM  VARIES THE DISTANCE BETWEEN THE WIRES-
C       "D"-(IN WAVELENGTHS) WHILE KEEPING THE RATIO  "D/A"
C       CONSTANT
C       ..............................................................
        COMMON KR,AA,M,BR,AR
        COMPLEX KR,KZP,KRP,RES
        REAL IJOA ,IJOD,IJ1A,IJ1D,IYOA,IYOD,IY1A,IY1D
        COMPLEX    KRA,KRD,JOA,YOA,JOD,YOD,HOA,HOD,J1A
        COMPLEX Y1A,J1D,Y1D,GR1,GR2,H1A,H1D,F,GRA1,GRA2
        COMPLEX KRPA,KRPD
        REAL KZ(2),K,KH
        REAL GRAD(2)
        REAL OGRAD(2),CON(2)
C
C       DEPARTURE POINT FOR THE SEARCHING IN THE KZ PLANE
C
        I=1
        BR=1.
        AR=-2.
C
C       START SEARCHING FOR THE ROOTS IN THE KZ PLANE
C
9        IF (BR.GT.100) GO TO 8
        WRITE (5,18) I
18      FORMAT(///,1X,'THE INDEX OF THE MODE IS ',I2,//)
        OGRAD(1)=0.
        OGRAD(2)=0.
        CON(1)=0.50
        CON(2)=0.50
        N=2
        PI=3.1415927
        K=2*PI
        KH=K**2+AR**2-BR**2
        BZ=SQRT(0.5*(KH+SQRT((KH**2+(2*AR*BR)**2))))
        AZ=-AR*BR/BZ
        KR=CMPLX(BR,-AR)
        KZ(1)=BZ
        KZ(2)=AZ
C
C       THE RATIO "D/A"
C
        M=100
        AA=1./M
        WRITE (5,19) M
19      FORMAT (1X,'  D/A =',I6  )
3       CALL FUNCT(N,KZ,VAL,GRAD)
        IF(VAL.LT.0.1E-5) GO TO 1
        IF (GRAD(1)) 22,27,27
22      IF (OGRAD(1)) 23,24,24
```

```
24      CON(1)=CON(1)/2.
23      KZ(1)=KZ(1)+CON(1)
        OGRAD(1)=GRAD(1)
        GO TO 31
27      IF (OGRAD(1)) 28,29,29
28      CON(1)=CON(1)/2
29      KZ(1)=KZ(1)-CON(1)
        OGRAD(1)=GRAD(1)
31      CONTINUE
        IF (GRAD(2)) 32,37,37
32      IF (OGRAD(2)) 33,34,34
34      CON(2)=CON(2)/2.
33      KZ(2)=KZ(2)+CON(2)
        OGRAD(2)=GRAD(2)
        GO TO 3
37      IF (OGRAD(2)) 38,39,39
38      CON(2)=CON(2)/2
39      KZ(2)=KZ(2)-CON(2)
        OGRAD(2)=GRAD(2)
        GO TO 3
1       CONTINUE
C
C       INITIAL VALUE FOR THE DISTANCE-D
C
        D=0.1
70      A=D/M
        IF(D.GT.5.00) GO TO 60
        BP=+BR/D
        AP=+AR/D
        KRP=CMPLX(BP,-AP)
        KRPA=KRP*A
        KRPD=KRP*D
        K=2*PI
        KH=K**2+AP**2-BP**2
        BZ=SQRT(0.5*(KH+SQRT((KH**2+(2*AP*BP)**2))))
        AZ=-AP*BP/BZ
        KZP=CMPLX(-BZ,AZ)
        WRITE (5,80) D
80      FORMAT(//,1X,'D IS :',F6.4)
        WRITE(5,90) KZP
90      FORMAT(/,1X,'REAL KZ IS :',F9.4,'   IMAG KZ IS :',F9.4)
        CALL CBES1(KRPA,J1A,Y1A)
        CALL CBES1(KRPD,J1D,Y1D)
        RJ1A=REAL(J1A)
        IJ1A=AIMAG(J1A)
        RY1D=REAL(Y1D)
        IY1D=AIMAG(Y1D)
        RJ1D=REAL(J1D)
        IJ1D=AIMAG(J1D)
        RY1D=REAL(Y1D)
        IY1D=AIMAG(Y1D)
        H1A=CMPLX(RJ1A+IY1A,IJ1A-RY1A)
        H1D=CMPLX(RJ1D+IY1D,+IJ1D-RY1D)
C
C       THE CONTRIBUTION OF THE LEAKY MODE
C       TO THE TOTAL CURRENT NORMALIZED TO THE
```

```
C       CONTRIBUTION OF THE TEM MODE
C
        RES=4./377.
        RES=  RES*(0,1)*K/KRP/KZP/(A*H1A+D*H1D)
        ARS=CABS(RES)
        T=M
        RAT=ARS*377.*ALOG(T)/PI
        WRITE(5,40) ARS
40      FORMAT(/,1X,'THE CURRENT IS :',E15.8)
        WRITE(5,41) RAT
41      FORMAT(/,1X,'CUR/TEM IS:',E15.8)
C
C       CHANGING THE DISTANCE-D
C
        D=D+0.1
        GO TO 70
60      CONTINUE
C
C       CHANGING THE DEPARTURE POINT IN ORDER TO
C       START THE SEARCHING FOR THE CONSECUTIVE ROOT
C
        I=I+1
        BR=BR+5
        GO TO 9
8        CONTINUE
        STOP
        END
C
C       THE SUBROUTINE CBESO  CALCULATES THE ZERO ORDER BESSEL
C       FUNCTIONS FOR A GIVEN INPUT VARIABLE Z
C
      SUBROUTINE CBESO(Z,BSJO,BSYO)
      COMPLEX Z,BSJO,BSYO,Y,W,PO,FO,CEXP
      COMPLEX CCOS,CSIN,CSQRT,CLOG,SPO,SQO,QO,CS,SN,SP1,SQ1
      PI=3.141593
      A=CABS(Z)
      BSJO=(1.,0.)
      IF(A.EQ.0.) GO TO 2
      IF(A.GT.3.) GO TO 1
      Y=Z*Z/9.
      BSJO=1.+Y*(-2.2499997+Y*(1.2656208+Y*(-.3163866
     1+Y*(.0444479+Y*(-.0039444+Y*.00021)))))
      GO TO 2
1     W=3./Z
      FO=.79788456+W*(-.00000077+W*(-.0055274+W*(-.00009512
     1+W*(.00137237+W*(-.00072805+W*.00014476)))))
      PO=.78539816+W*(.04166397+W*(.00003954+W*(-.00262573
     1+W*(.00054125+W*(.00029333-W*.00013558)))))
      BSJO=FO*CCOS(Z-PO)/CSQRT(Z)
2     CONTINUE
      BSYO=(-1.E30,0)
      IF(A.EQ.0.) GO TO 3
      IF(A.GT.3.) GO TO 4
      BSYO=.63661977*CLOG(.5*Z)*BSJO+.36746691+Y*(.60559366
     1+Y*(-.74350384+Y*(.25300117+Y*(-.04261214+Y*(.00427916
     2-Y*.00024846)))))
```

```
      GO TO 3
4     CONTINUE
      BSY0=F0*CSIN(Z-P0)/CSQRT(Z)
3     CONTINUE
      RETURN
      END
C
C       THE SUBROUTINE CBES1 CALCULATES THE FIRST ORDER BESSEL
C       FUNCTIONS FOR A GIVEN INPUT VARIABLE Z
C
      SUBROUTINE CBES1(Z,BSJ1,BSY1)
      COMPLEX Z,BSJ1,BSY1,Y,W,P1,F1,CEXP
      COMPLEX CCOS,CSQRT,CLOG,CSIN,SP1,SQ1,Q1,F,CS,SN,SP2,SQ2
      PI=3.141593
      A=CABS(Z)
      BSJ1=0.
      IF(A.EQ.0.) GO TO 2
      IF(A.GT.3.) GO TO 1
      Y=Z*Z/9.
      BSJ1=Z*( .5+Y*(-.56249985+Y*(.21093573+Y*(-.0395 289
     1+Y*(.00443319+Y*(-.00031761+Y*.00001109))))))
      GO TO 2
1     W=3./Z
      F1=.79788456+W*(.00000156+W*(.01659667+W*(.00017105
     1+W*(-.00249511+W*(.00113653-W*.00020033)))))
      P1=2.35619449+W*(-.12499612+W*(-.00005650+W*(.00637879
     1+W*(-.00074348+W*(-.00079824+W*.00029166)))))
      BSJ1=F1*CCOS(Z-P1)/CSQRT(Z)
2     CONTINUE
      BSY1=(-1.E30,0)
      IF(A.EQ.0.) GO TO 3
      IF(A.GT.3.) GO TO 4
      BSY1=(-.63661977+Y*(.2212091+Y*(2.1682709+Y*(-1.3164827
     1+Y*(.3123951+Y*(-.0400976+Y*.0027873))))))/Z
     2+.63661977*CLOG(.5*Z)*BSJ1
      GO TO 3
4     BSY1=F1*CSIN(Z-P1)/CSQRT(Z)
3     CONTINUE
      RETURN
      END
C
C       THE SUBROUTINE FUNCT CALCULATES FOR EACH VECTOR KZ
C       THE VALUE OF THE FUNCTIONAL WHICH WE TRY
C       TO MINIMIZE AND ITS GRADIENT
C
        SUBROUTINE FUNCT(N,KZ,VAL,GRAD)
        COMMON KR,AA,M,BR,AR
        DIMENSION       GRAD(2)
        REAL KZ(2),K,KH
        REAL IJOA ,IJOD,IJ1A,IJ1D,IYOA,IYOD,IY1A,IY1D
        COMPLEX KR,KRA,KRD,JOA,YOA,JOD,YOD,HOA,HOD,J1A
        COMPLEX Y1A,J1D,Y1D,GR1,GR2,H1A,H1D,F,GRA1,GRA2
        BZ=KZ(1)
        AZ=KZ(2)
        PI=3.1415927
        K=2*PI
```

```
KH=K**2+AZ**2-BZ**2
BR=SQRT(0.5*(KH+SQRT((KH**2+(2*AZ*BZ)**2))))
AR=-AZ*BZ/BR
KR=CMPLX(BR,-AR)
KRA=KR*AA
KRD=KRA*M
CALL CBES0(KRA,J0A,Y0A)
CALL CBES0(KRD,J0D,Y0D)
RJ0A=REAL(J0A)
IJ0A=AIMAG(J0A)
RY0A=REAL(Y0A)
IY0A=AIMAG(Y0A)
RJ0D=REAL(J0D)
IJ0D=AIMAG(J0D)
RY0D=REAL(Y0D)
IY0D=AIMAG(Y0D)
H0A=CMPLX(RJ0A+IY0A,IJ0A-RY0A)
H0D=CMPLX(RJ0D+IY0D,IJ0D-RY0D)
F=H0A+H0D
VAL=CABS(F)
VAL=VAL**2
CALL CBES1(KRA,J1A,Y1A)
CALL CBES1(KRD,J1D,Y1D)
RJ1A=REAL(J1A)
IJ1A=AIMAG(J1A)
RY1D=REAL(Y1D)
IY1D=AIMAG(Y1D)
RJ1D=REAL(J1D)
IJ1D=AIMAG(J1D)
RY1D=REAL(Y1D)
IY1D=AIMAG(Y1D)
H1A=CMPLX(RJ1A+IY1A,IJ1A-RY1A)
H1D=CMPLX(RJ1D+IY1D,+IJ1D-RY1D)
GR1=-H1A*(-CMPLX(BZ,-AZ)*AA/KR)
GR1=GR1-H1D*(-CMPLX(BZ,-AZ)*AA*M/KR)
GR2=GR1*(0.0,-1.0)
GRA1=GR1*CONJG(F)+CONJG(GR1)*F
GRA2=GR2*CONJG(F)+CONJG(GR2)*F
GRAD(1)=REAL(GRA1)
GRAD(2)=REAL(GRA2)
RETURN
END
```

Output Sample for Program No. 3

```
D/A =     10

D IS : .1000
REAL KZ IS : -11.9813   IMAG KZ IS :  32.2049
THE CURRENT IS : 0.40988265E-03
CUR/TEM IS: 0.11325743E+00

D IS : .2000
REAL KZ IS :  -6.3111   IMAG KZ IS :  15.2847
THE CURRENT IS : 0.85170465E-03
CUR/TEM IS: 0.23534023E+00

D IS : .3000
REAL KZ IS :  -4.6324   IMAG KZ IS :   9.2551
THE CURRENT IS : 0.13608340E-02
CUR/TEM IS: 0.37602118E+00

D IS : .4000
REAL KZ IS :  -4.0584   IMAG KZ IS :   5.9422
THE CURRENT IS : 0.19572516E-02
CUR/TEM IS: 0.54082134E+00

D IS : .5000
REAL KZ IS :  -4.0681   IMAG KZ IS :   3.7940
THE CURRENT IS : 0.25318940E-02
CUR/TEM IS: 0.69960463E+00

D IS : .6000
REAL KZ IS :  -4.4116   IMAG KZ IS :   2.4296
THE CURRENT IS : 0.27964980E-02
CUR/TEM IS: 0.77271914E+00
```

Program No. 4

```
C       ..............................................................
C       THE PURPOSES OF THIS PROGRAM ARE:
C       1) TO FIND THE REAL AND IMAGINARY PARTS OF THE R-DIRECTED
C          AND Z-DIRECTED WAVE NUMBERS,ASSOCIATED WITH THE HIGHER
C          ORDER ODD  LEAKY MODES IN THE CASE OF VOLT EXCITATION
C       2) TO CALCULATE THE CONTRIBUTION OF EACH MODE TO THE TOTAL
C          CURRENT.
C       THE PROGRAM  VARIES THE DISTANCE BETWEEN THE WIRES-
C       "D"-(IN WAVELENGTHS) WHILE KEEPING THE RATIO  "D/A"
C       CONSTANT
C       ..............................................................
        COMMON KR,AA,M,BR,AR
        COMPLEX KR,KZP,KRP,RES
        REAL IJOA ,IJOD,IJ1A,IJ1D,IYOA,IYOD,IY1A,IY1D
        COMPLEX    KRA,KRD,JOA,YOA,JOD,YOD,HOA,HOD,J1A
        COMPLEX Y1A,J1D,Y1D,GR1,GR2,H1A,H1D,F,GRA1,GRA2
        COMPLEX KRPA,KRPD
        REAL KZ(2),K,KH
        REAL GRAD(2)
        REAL OGRAD(2),CON(2)
C
C       DEPARTURE POINT FOR THE SEARCHING IN THE KZ PLANE
C
        I=1
        BR=1.
        AR=-2.
C
C       START SEARCHING FOR THE ROOTS IN THE KZ PLANE
C
9        IF (BR.GT.100) GO TO 8
        WRITE (5,18) I
18      FORMAT(///,1X,'THE INDEX OF THE MODE IS ',I2,//)
        OGRAD(1)=0.
        OGRAD(2)=0.
        CON(1)=0.50
        CON(2)=0.50
        N=2
        PI=3.1415927
        K=2*PI
        KH=K**2+AR**2-BR**2
        BZ=SQRT(0.5*(KH+SQRT((KH**2+(2*AR*BR)**2))))
        AZ=-AR*BR/BZ
        KR=CMPLX(BR,-AR)
        KZ(1)=BZ
        KZ(2)=AZ
C
C       THE RATIO "D/A"
C
        M=100
        AA=1./M
        WRITE (5,19) M
19      FORMAT (1X,'  D/A =',I6   )
3       CALL FUNCT(N,KZ,VAL,GRAD)
        IF(VAL.LT.0.1E-5) GO TO 1
        IF (GRAD(1)) 22,27,27
22      IF (OGRAD(1)) 23,24,24
```

```
24      CON(1)=CON(1)/2.
23      KZ(1)=KZ(1)+CON(1)
        OGRAD(1)=GRAD(1)
        GO TO 31
27      IF (OGRAD(1)) 28,29,29
28      CON(1)=CON(1)/2
29      KZ(1)=KZ(1)-CON(1)
        OGRAD(1)=GRAD(1)
31      CONTINUE
        IF (GRAD(2)) 32,37,37
32      IF (OGRAD(2)) 33,34,34
34      CON(2)=CON(2)/2.
33      KZ(2)=KZ(2)+CON(2)
        OGRAD(2)=GRAD(2)
        GO TO 3
37      IF (OGRAD(2)) 38,39,39
38      CON(2)=CON(2)/2
39      KZ(2)=KZ(2)-CON(2)
        OGRAD(2)=GRAD(2)
        GO TO 3
1       CONTINUE
C
C       INITIAL VALUE FOR THE DISTANCE-D
C
        D=0.1
70      A=D/M
        IF(D.GT.5.00) GO TO 60
        BP=+BR/D
        AP=+AR/D
        KRP=CMPLX(BP,-AP)
        KRPA=KRP*A
        KRPD=KRP*D
        K=2*PI
        KH=K**2+AP**2-BP**2
        BZ=SQRT(0.5*(KH+SQRT((KH**2+(2*AP*BP)**2))))
        AZ=-AP*BP/BZ
        KZP=CMPLX(-BZ,AZ)
        WRITE (5,80) D
80      FORMAT(//,1X,'D IS :',F6.4)
        WRITE(5,90) KZP
90      FORMAT(/,1X,'REAL KZ IS :',F9.4,'   IMAG KZ IS :',F9.4)
        CALL CBES1(KRPA,J1A,Y1A)
        CALL CBES1(KRPD,J1D,Y1D)
        RJ1A=REAL(J1A)
        IJ1A=AIMAG(J1A)
        RY1D=REAL(Y1D)
        IY1D=AIMAG(Y1D)
        RJ1D=REAL(J1D)
        IJ1D=AIMAG(J1D)
        RY1D=REAL(Y1D)
        IY1D=AIMAG(Y1D)
        H1A=CMPLX(RJ1A+IY1A,IJ1A-RY1A)
        H1D=CMPLX(RJ1D+IY1D,+IJ1D-RY1D)
C
C       THE CONTRIBUTION OF THE LEAKY MODE
C       TO THE TOTAL CURRENT NORMALIZED TO THE
```

```
C       CONTRIBUTION OF THE TEM MODE
C
        RES=4./377.
        RES=  RES*(0,1)*K/KRP/KZP/(A*H1A+D*H1D)
        ARS=CABS(RES)
        T=M
        RAT=ARS*377.*ALOG(T)/PI
        WRITE(5,40) ARS
40      FORMAT(/,1X,'THE CURRENT IS :',E15.8)
        WRITE(5,41) RAT
41      FORMAT(/,1X,'CUR/TEM IS:',E15.8)
C
C       CHANGING THE DISTANCE-D
C
        D=D+0.1
        GO TO 70
60      CONTINUE
C
C       CHANGING THE DEPARTURE POINT IN ORDER TO
C       START THE SEARCHING FOR THE CONSECUTIVE ROOT
C
        I=I+1
        BR=BR+5
        GO TO 9
8        CONTINUE
        STOP
        END
C
C       THE SUBROUTINE CBESO  CALCULATES THE ZERO ORDER BESSEL
C       FUNCTIONS FOR A GIVEN INPUT VARIABLE Z
C
      SUBROUTINE CBESO(Z,BSJO,BSYO)
      COMPLEX Z,BSJO,BSYO,Y,W,PO,FO,CEXP
      COMPLEX CCOS,CSIN,CSQRT,CLOG,SPO,SQO,QO,CS,SN,SP1,SQ1
      PI=3.141593
      A=CABS(Z)
      BSJO=(1.,0.)
      IF(A.EQ.0.) GO TO 2
      IF(A.GT.3.) GO TO 1
      Y=Z*Z/9.
      BSJO=1.+Y*(-2.2499997+Y*(1.2656208+Y*(-.3163866
     1+Y*(.0444479+Y*(-.0039444+Y*.00021)))))
      GO TO 2
1     W=3./Z
      FO=.79788456+W*(-.00000077+W*(-.0055274+W*(-.00009512
     1+W*(.00137237+W*(-.00072805+W*.00014476)))))
      PO=.78539816+W*(.04166397+W*(.00003954+W*(-.00262573
     1+W*(.00054125+W*(.00029333-W*.00013558)))))
      BSJO=FO*CCOS(Z-PO)/CSQRT(Z)
2     CONTINUE
      BSYO=(-1.E30,0)
      IF(A.EQ.0.) GO TO 3
      IF(A.GT.3.) GO TO 4
      BSYO=.63661977*CLOG(.5*Z)*BSJO+.36746691+Y*(.60559366
     1+Y*(-.74350384+Y*(.25300117+Y*(-.04261214+Y*(.00427916
     2-Y*.00024846)))))
```

```
      GO TO 3
4     CONTINUE
      BSY0=F0*CSIN(Z-P0)/CSQRT(Z)
3     CONTINUE
      RETURN
      END
C
C       THE SUBROUTINE CBES1 CALCULATES THE FIRST ORDER BESSEL
C       FUNCTIONS FOR A GIVEN INPUT VARIABLE Z
C
      SUBROUTINE CBES1(Z,BSJ1,BSY1)
      COMPLEX Z,BSJ1,BSY1,Y,W,P1,F1,CEXP
      COMPLEX CCOS,CSQRT,CLOG,CSIN,SP1,SQ1,Q1,F,CS,SN,SP2,SQ2
      PI=3.141593
      A=CABS(Z)
      BSJ1=0.
      IF(A.EQ.0.) GO TO 2
      IF(A.GT.3.) GO TO 1
      Y=Z*Z/9.
      BSJ1=Z*(.5+Y*(-.56249985+Y*(.21093573+Y*(-.03954289
     1+Y*(.00443319+Y*(-.00031761+Y*.00001109))))))
      GO TO 2
1     W=3./Z
      F1=.79788456+W*(.00000156+W*(.01659667+W*(.00017105
     1+W*(-.00249511+W*(.00113653-W*.00020033)))))
      P1=2.35619449+W*(-.12499612+W*(-.00005650+W*(.00637879
     1+W*(-.00074348+W*(-.00079824+W*.00029166)))))
      BSJ1=F1*CCOS(Z-P1)/CSQRT(Z)
2     CONTINUE
      BSY1=(-1.E30,0)
      IF(A.EQ.0.) GO TO 3
      IF(A.GT.3.) GO TO 4
      BSY1=(-.63661977+Y*(.2212091+Y*(2.1682709+Y*(-1.3164827
     1+Y*(.3123951+Y*(-.0400976+Y*.0027873))))))/Z
     2+.63661977*CLOG(.5*Z)*BSJ1
      GO TO 3
4     BSY1=F1*CSIN(Z-P1)/CSQRT(Z)
3     CONTINUE
      RETURN
      END
C
C       THE SUBROUTINE FUNCT CALCULATES FOR EACH VECTOR KZ
C       THE VALUE OF THE FUNCTIONAL WHICH WE TRY
C       TO MINIMIZE AND ITS GRADIENT
C
        SUBROUTINE FUNCT(N,KZ,VAL,GRAD)
        COMMON KR,AA,M,BR,AR
        DIMENSION       GRAD(2)
        REAL KZ(2),K,KH
        REAL IJ0A ,IJ0D,IJ1A,IJ1D,IY0A,IY0D,IY1A,IY1D
        COMPLEX KR,KRA,KRD,J0A,Y0A,J0D,Y0D,H0A,H0D,J1A
        COMPLEX Y1A,J1D,Y1D,GR1,GR2,H1A,H1D,F,GRA1,GRA2
        BZ=KZ(1)
        AZ=KZ(2)
        PI=3.1415927
        K=2*PI
```

```
KH=K**2+AZ**2-BZ**2
BR=SQRT(0.5*(KH+SQRT((KH**2+(2*AZ*BZ)**2))))
AR=-AZ*BZ/BR
KR=CMPLX(BR,-AR)
KRA=KR*AA
KRD=KRA*M
CALL CBES0(KRA,J0A,Y0A)
CALL CBES0(KRD,J0D,Y0D)
RJ0A=REAL(J0A)
IJ0A=AIMAG(J0A)
RY0A=REAL(Y0A)
IY0A=AIMAG(Y0A)
RJ0D=REAL(J0D)
IJ0D=AIMAG(J0D)
RY0D=REAL(Y0D)
IY0D=AIMAG(Y0D)
H0A=CMPLX(RJ0A+IY0A,IJ0A-RY0A)
H0D=CMPLX(RJ0D+IY0D,IJ0D-RY0D)
F=H0A-H0D
VAL=CABS(F)
VAL=VAL**2
CALL CBES1(KRA,J1A,Y1A)
CALL CBES1(KRD,J1D,Y1D)
RJ1A=REAL(J1A)
IJ1A=AIMAG(J1A)
RY1D=REAL(Y1D)
IY1D=AIMAG(Y1D)
RJ1D=REAL(J1D)
IJ1D=AIMAG(J1D)
RY1D=REAL(Y1D)
IY1D=AIMAG(Y1D)
H1A=CMPLX(RJ1A+IY1A,IJ1A-RY1A)
H1D=CMPLX(RJ1D+IY1D,+IJ1D-RY1D)
GR1=-H1A*(-CMPLX(BZ,-AZ)*AA/KR)
GR1=GR1-H1D*(-CMPLX(BZ,-AZ)*AA*M/KR)
GR2=GR1*(0.0,-1.0)
GRA1=GR1*CONJG(F)+CONJG(GR1)*F
GRA2=GR2*CONJG(F)+CONJG(GR2)*F
GRAD(1)=REAL(GRA1)
GRAD(2)=REAL(GRA2)
RETURN
END
```

Output Sample for Program No. 4

```
D/A =     10

D IS : .1000
REAL KZ IS : -12.3694   IMAG KZ IS :  68.1768
THE CURRENT IS : 0.13376462E-03
CUR/TEM IS: 0.36961400E-01

D IS : .2000
REAL KZ IS :  -6.2624   IMAG KZ IS :  33.6657
THE CURRENT IS : 0.27066794E-03
CUR/TEM IS: 0.74790076E-01

D IS : .3000
REAL KZ IS :  -4.2655   IMAG KZ IS :  21.9671
THE CURRENT IS : 0.41419069E-03
CUR/TEM IS: 0.11444781E+00

D IS : .4000
REAL KZ IS :  -3.3017   IMAG KZ IS :  15.9635
THE CURRENT IS : 0.56857456E-03
CUR/TEM IS: 0.15710665E+00

D IS : .5000
REAL KZ IS :  -2.7587   IMAG KZ IS :  12.2276
THE CURRENT IS : 0.73941571E-03
CUR/TEM IS: 0.20431292E+00

D IS : .6000
REAL KZ IS :  -2.4367   IMAG KZ IS :   9.6135
THE CURRENT IS : 0.93456462E-03
CUR/TEM IS: 0.25823583E+00
```

Program No. 5

```
C       ..............................................................
C       THE PURPOSES OF THIS PROGRAM ARE:
C       1) TO FIND THE REAL AND IMAGINARY PARTS OF THE R-DIRECTED
C          AND Z-DIRECTED WAVE NUMBERS,ASSOCIATED WITH THE HIGHER
C          ORDER EVEN LEAKY MODES IN THE CASE OF VOLT EXCITATION
C       2) TO CALCULATE THE CONTRIBUTION OF EACH MODE TO THE TOTAL
C          CURRENT.
C       THE PROGRAM VARIES THE RATIO-"D/A",WHILE KEEPING
C       THE DISTANCE BETWEEN THE WIRES-"D" CONSTANT
C       ...................................................
        COMMON KR,AA,M,BR,AR
        COMPLEX KR,KZP,KRP,RES
        REAL IJOA ,IJOD,IJ1A,IJ1D,IYOA,IYOD,IY1A,IY1D
        COMPLEX    KRA,KRD,JOA,YOA,JOD,YOD,HOA,HOD,J1A
        COMPLEX Y1A,J1D,Y1D,GR1,GR2,H1A,H1D,F,GRA1,GRA2
        COMPLEX KRPA,KRPD
        REAL KZ(2),K,KH
        REAL GRAD(2)
        REAL OGRAD(2),CON(2)
C
C       DEPARTURE POINT FOR THE SEARCHING IN THE KZ PLANE
C
        I=1
        BR=1.
        AR=-2.
C
C       START SEARCHING FOR THE ROOTS IN THE KZ PLANE
C
9        IF (BR.GT.100) GO TO 8
        WRITE (5,18) I
18      FORMAT(///,1X,'THE INDEX OF THE MODE IS ',I2,//)
C
C       THE DISTANCE BETWEEN THE WIRES
C
        D=2.0
        WRITE (5,80) D
80      FORMAT(////,1X,' D IS  ',F6.4,///)
C
C       INITIAL VALUE FOR THE RATIO "D/A"
C
        M=10
41      IF(M.GT.1000) GO TO 60
        OGRAD(1)=0.
        OGRAD(2)=0.
        CON(1)=0.50
        CON(2)=0.50
        N=2
        PI=3.1415927
        K=2*PI
        KH=K**2+AR**2-BR**2
        BZ=SQRT(0.5*(KH+SQRT((KH**2+(2*AR*BR)**2))))
        AZ=-AR*BR/BZ
        KR=CMPLX(BR,-AR)
        KZ(1)=BZ
        KZ(2)=AZ
        AA=1./M
```

```
      WRITE (5,19) M
19    FORMAT(//,1X,'D/A =',I4)
3     CALL FUNCT(N,KZ,VAL,GRAD)
      IF(VAL.LT.0.1E-5) GO TO 1
      IF (GRAD(1)) 22,27,27
22    IF (OGRAD(1)) 23,24,24
24    CON(1)=CON(1)/2.
23    KZ(1)=KZ(1)+CON(1)
      OGRAD(1)=GRAD(1)
      GO TO 31
27    IF (OGRAD(1)) 28,29,29
28    CON(1)=CON(1)/2
29    KZ(1)=KZ(1)-CON(1)
      OGRAD(1)=GRAD(1)
31    CONTINUE
      IF (GRAD(2)) 32,37,37
32    IF (OGRAD(2)) 33,34,34
34    CON(2)=CON(2)/2.
33    KZ(2)=KZ(2)+CON(2)
      OGRAD(2)=GRAD(2)
      GO TO 3
37    IF (OGRAD(2)) 38,39,39
38    CON(2)=CON(2)/2
39    KZ(2)=KZ(2)-CON(2)
      OGRAD(2)=GRAD(2)
      GO TO 3
1     CONTINUE
70    A=D/M
      BP=+BR/D
      AP=+AR/D
      KRP=CMPLX(BP,-AP)
      KRPA=KRP*A
      KRPD=KRP*D
      K=2*PI
      KH=K**2+AP**2-BP**2
      BZ=SQRT(0.5*(KH+SQRT((KH**2+(2*AP*BP)**2))))
      AZ=-AP*BP/BZ
      KZP=CMPLX(-BZ,AZ)
      WRITE(5,90) KZP
90    FORMAT(/,1X,'REAL KZ IS :',F9.4,'    IMAG KZ IS :',F9.4)
      CALL CBES1(KRPA,J1A,Y1A)
      CALL CBES1(KRPD,J1D,Y1D)
      RJ1A=REAL(J1A)
      IJ1A=AIMAG(J1A)
      RY1D=REAL(Y1D)
      IY1D=AIMAG(Y1D)
      RJ1D=REAL(J1D)
      IJ1D=AIMAG(J1D)
      RY1D=REAL(Y1D)
      IY1D=AIMAG(Y1D)
      H1A=CMPLX(RJ1A+IY1A,IJ1A-RY1A)
      H1D=CMPLX(RJ1D+IY1D,+IJ1D-RY1D)
C
C     THE CONTRIBUTION OF THE LEAKY MODE
C     TO THE TOTAL CURRENT NORMALIZED TO THE
C     CONTRIBUTION OF THE TEM MODE
```

```
C
      RES=4./377.
      RES=  RES*(0,1)*K/KRP/KZP/(A*H1A+D*H1D)
      ARS=CABS(RES)
      WRITE(5,40) ARS
40    FORMAT(/,1X,'THE CURRENT IS :',E15.8)
      T=M
      RAT=ARS*377.*ALOG(T)/PI
      WRITE(5,47) RAT
47    FORMAT(/,1X,'THE CUR/TEM IS :',E15.8)
C
C     CHANGING THE RATIO 'D/A'
C
      M=M+1
      GO TO 41
60    CONTINUE
C
C     CHANGING THE DEPARTURE POINT IN ORDER TO
C     START THE SEARCHING FOR THE CONSECUTIVE ROOT
C
      I=I+1
      BR=BR+5
      GO TO 9
8      CONTINUE
      STOP
      END
C
C     THE SUBROUTINE CBESO  CALCULATES THE ZERO ORDER BESSEL
C     FUNCTIONS FOR A GIVEN INPUT VARIABLE Z
C
      SUBROUTINE CBESO(Z,BSJO,BSYO)
      COMPLEX Z,BSJO,BSYO,Y,W,PO,FO,CEXP
      COMPLEX CCOS,CSIN,CSQRT,CLOG,SPO,SQO,QO,CS,SN,SP1,SQ1
      PI=3.141593
      A=CABS(Z)
      BSJO=(1.,0.)
      IF(A.EQ.0.) GO TO 2
      IF(A.GT.3.) GO TO 1
      Y=Z*Z/9.
      BSJO=1.+Y*(-2.2499997+Y*(1.2656208+Y*(-.3163866
     1+Y*(.0444479+Y*(-.0039444+Y*.00021)))))
      GO TO 2
1     W=3./Z
      FO=.79788456+W*(-.00000077+W*(-.0055274+W*(-.00009512
     1+W*(.00137237+W*(-.00072805+W*.00014476)))))
      PO=.78539816+W*(.04166397+W*(.00003954+W*(-.00262573
     1+W*(.00054125+W*(.00029333-W*.00013558)))))
      BSJO=FO*CCOS(Z-PO)/CSQRT(Z)
2     CONTINUE
      BSYO=(-1.E30,0)
      IF(A.EQ.0.) GO TO 3
      IF(A.GT.3.) GO TO 4
      BSYO=.63661977*CLOG(.5*Z)*BSJO+.36746691+Y*(.60559366
     1+Y*(-.74350384+Y*(.25300117+Y*(-.04261214+Y*(.00427916
     2-Y*.00024846)))))
      GO TO 3
```

```
4     CONTINUE
      BSY0=F0*CSIN(Z-P0)/CSQRT(Z)
3     CONTINUE
      RETURN
      END
C
C       THE SUBROUTINE CBES1 CALCULATES THE FIRST ORDER BESSEL
C       FUNCTIONS FOR A GIVEN INPUT VARIABLE Z
C
      SUBROUTINE CBES1(Z,BSJ1,BSY1)
      COMPLEX Z,BSJ1,BSY1,Y,W,P1,F1,CEXP
      COMPLEX CCOS,CSQRT,CLOG,CSIN,SP1,SQ1,Q1,F,CS,SN,SP2,SQ2
      PI=3.141593
      A=CABS(Z)
      BSJ1=0.
      IF(A.EQ.0.) GO TO 2
      IF(A.GT.3.) GO TO 1
      Y=Z*Z/9.
      BSJ1=Z*(.5+Y*(-.56249985+Y*(.21093573+Y*(-.03954289
     1+Y*(.00443319+Y*(-.00031761+Y*.00001109))))))
      GO TO 2
1     W=3./Z
      F1=.79788456+W*(.00000156+W*(.01659667+W*(.00017105
     1+W*(-.00249511+W*(.00113653-W*.00020033)))))
      P1=2.35619449+W*(-.12499612+W*(-.00005650+W*(.00637879
     1+W*(-.00074348+W*(-.00079824+W*.00029166)))))
      BSJ1=F1*CCOS(Z-P1)/CSQRT(Z)
2     CONTINUE
      BSY1=(-1.E30,0)
      IF(A.EQ.0.) GO TO 3
      IF(A.GT.3.) GO TO 4
      BSY1=(-.63661977+Y*(.2212091+Y*(2.1682709+Y*(-1.3164827
     1+Y*(.3123951+Y*(-.0400976+Y*.0027873))))))/Z
     2+.63661977*CLOG(.5*Z)*BSJ1
      GO TO 3
4     BSY1=F1*CSIN(Z-P1)/CSQRT(Z)
3     CONTINUE
      RETURN
      END
C
C       THE SUBROUTINE FUNCT CALCULATES FOR EACH VECTOR KZ
C       THE VALUE OF THE FUNCTIONAL WHICH WE TRY
C       TO MINIMIZE AND ITS GRADIENT
C
        SUBROUTINE FUNCT(N,KZ,VAL,GRAD)
        COMMON KR,AA,M,BR,AR
        DIMENSION       GRAD(2)
        REAL KZ(2),K,KH
        REAL IJ0A ,IJ0D,IJ1A,IJ1D,IY0A,IY0D,IY1A,IY1D
        COMPLEX KR,KRA,KRD,J0A,Y0A,J0D,Y0D,H0A,H0D,J1A
        COMPLEX Y1A,J1D,Y1D,GR1,GR2,H1A,H1D,F,GRA1,GRA2
        BZ=KZ(1)
        AZ=KZ(2)
        PI=3.1415927
        K=2*PI
        KH=K**2+AZ**2-BZ**2
```

```
BR=SQRT(0.5*(KH+SQRT((KH**2+(2*AZ*BZ)**2))))
AR=-AZ*BZ/BR
KR=CMPLX(BR,-AR)
KRA=KR*AA
KRD=KRA*M
CALL CBES0(KRA,J0A,Y0A)
CALL CBES0(KRD,J0D,Y0D)
RJ0A=REAL(J0A)
IJ0A=AIMAG(J0A)
RY0A=REAL(Y0A)
IY0A=AIMAG(Y0A)
RJ0D=REAL(J0D)
IJ0D=AIMAG(J0D)
RY0D=REAL(Y0D)
IY0D=AIMAG(Y0D)
H0A=CMPLX(RJ0A+IY0A,IJ0A-RY0A)
H0D=CMPLX(RJ0D+IY0D,IJ0D-RY0D)
F=H0A+H0D
VAL=CABS(F)
VAL=VAL**2
CALL CBES1(KRA,J1A,Y1A)
CALL CBES1(KRD,J1D,Y1D)
RJ1A=REAL(J1A)
IJ1A=AIMAG(J1A)
RY1D=REAL(Y1D)
IY1D=AIMAG(Y1D)
RJ1D=REAL(J1D)
IJ1D=AIMAG(J1D)
RY1D=REAL(Y1D)
IY1D=AIMAG(Y1D)
H1A=CMPLX(RJ1A+IY1A,IJ1A-RY1A)
H1D=CMPLX(RJ1D+IY1D,+IJ1D-RY1D)
GR1=-H1A*(-CMPLX(BZ,-AZ)*AA/KR)
GR1=GR1-H1D*(-CMPLX(BZ,-AZ)*AA*M/KR)
GR2=GR1*(0.0,-1.0)
GRA1=GR1*CONJG(F)+CONJG(GR1)*F
GRA2=GR2*CONJG(F)+CONJG(GR2)*F
GRAD(1)=REAL(GRA1)
GRAD(2)=REAL(GRA2)
RETURN
END
```

Output Sample for Program No. 5

```
D IS  2.0000


D/A =  10
REAL KZ IS :  -6.0968   IMAG KZ IS :   0.1582
THE CURRENT IS : 0.23093203E-02
THE CUR/TEM IS : 0.63810379E+00

D/A =  11
REAL KZ IS :  -6.1045   IMAG KZ IS :   0.1595
THE CURRENT IS : 0.22558292E-02
THE CUR/TEM IS : 0.64912435E+00

D/A =  12
REAL KZ IS :  -6.1111   IMAG KZ IS :   0.1605
THE CURRENT IS : 0.22111599E-02
THE CUR/TEM IS : 0.65935864E+00

D/A =  13
REAL KZ IS :  -6.1169   IMAG KZ IS :   0.1616
THE CURRENT IS : 0.21676725E-02
THE CUR/TEM IS : 0.66721214E+00

D/A =  14
REAL KZ IS :  -6.1220   IMAG KZ IS :   0.1626
THE CURRENT IS : 0.21300598E-02
THE CUR/TEM IS : 0.67457789E+00

D/A =  15
REAL KZ IS :  -6.1265   IMAG KZ IS :   0.1636
THE CURRENT IS : 0.20939744E-02
THE CUR/TEM IS : 0.68048655E+00
```

Program No. 6

```
C       ..............................................................
C       THE PURPOSES OF THIS PROGRAM ARE:
C       1) TO FIND THE REAL AND IMAGINARY PARTS OF THE R-DIRECTED
C          AND Z-DIRECTED WAVE NUMBERS,ASSOCIATED WITH THE HIGHER
C          ORDER  ODD LEAKY MODES IN THE CASE OF VOLT EXCITATION
C       2) TO CALCULATE THE CONTRIBUTION OF EACH MODE TO THE TOTAL
C          CURRENT.
C       THE PROGRAM VARIES THE RATIO-"D/A",WHILE KEEPING
C       THE DISTANCE BETWEEN THE WIRES-"D" CONSTANT
C       ..................................................
        COMMON KR,AA,M,BR,AR
        COMPLEX KR,KZP,KRP,RES
        REAL IJOA ,IJOD,IJ1A,IJ1D,IYOA,IYOD,IY1A,IY1D
        COMPLEX    KRA,KRD,JOA,YOA,JOD,YOD,HOA,HOD,J1A
        COMPLEX Y1A,J1D,Y1D,GR1,GR2,H1A,H1D,F,GRA1,GRA2
        COMPLEX KRPA,KRPD
        REAL KZ(2),K,KH
        REAL GRAD(2)
        REAL OGRAD(2),CON(2)
C
C       DEPARTURE POINT FOR THE SEARCHING IN THE KZ PLANE
C
        I=1
        BR=1.
        AR=-2.
C
C       START SEARCHING FOR THE ROOTS IN THE KZ PLANE
C
9        IF (BR.GT.100) GO TO 8
        WRITE (5,18) I
18      FORMAT(///,1X,'THE INDEX OF THE MODE IS ',I2,//)
C
C       THE DISTANCE BETWEEN THE WIRES
C
        D=2.0
        WRITE (5,80) D
80      FORMAT(////,1X,' D IS  ',F6.4,///)
C
C       INITIAL VALUE FOR THE RATIO "D/A"
C
        M=10
41      IF(M.GT.1000) GO TO 60
        OGRAD(1)=0.
        OGRAD(2)=0.
        CON(1)=0.50
        CON(2)=0.50
        N=2
        PI=3.1415927
        K=2*PI
        KH=K**2+AR**2-BR**2
        BZ=SQRT(0.5*(KH+SQRT((KH**2+(2*AR*BR)**2))))
        AZ=-AR*BR/BZ
        KR=CMPLX(BR,-AR)
        KZ(1)=BZ
        KZ(2)=AZ
        AA=1./M
```

```
      WRITE (5,19) M
19    FORMAT(//,1X,'D/A =',I4)
3     CALL FUNCT(N,KZ,VAL,GRAD)
      IF(VAL.LT.0.1E-5) GO TO 1
      IF (GRAD(1)) 22,27,27
22    IF (OGRAD(1)) 23,24,24
24    CON(1)=CON(1)/2.
23    KZ(1)=KZ(1)+CON(1)
      OGRAD(1)=GRAD(1)
      GO TO 31
27    IF (OGRAD(1)) 28,29,29
28    CON(1)=CON(1)/2
29    KZ(1)=KZ(1)-CON(1)
      OGRAD(1)=GRAD(1)
31    CONTINUE
      IF (GRAD(2)) 32,37,37
32    IF (OGRAD(2)) 33,34,34
34    CON(2)=CON(2)/2.
33    KZ(2)=KZ(2)+CON(2)
      OGRAD(2)=GRAD(2)
      GO TO 3
37    IF (OGRAD(2)) 38,39,39
38    CON(2)=CON(2)/2
39    KZ(2)=KZ(2)-CON(2)
      OGRAD(2)=GRAD(2)
      GO TO 3
1     CONTINUE
70    A=D/M
      BP=+BR/D
      AP=+AR/D
      KRP=CMPLX(BP,-AP)
      KRPA=KRP*A
      KRPD=KRP*D
      K=2*PI
      KH=K**2+AP**2-BP**2
      BZ=SQRT(0.5*(KH+SQRT((KH**2+(2*AP*BP)**2))))
      AZ=-AP*BP/BZ
      KZP=CMPLX(-BZ,AZ)
      WRITE(5,90) KZP
90    FORMAT(/,1X,'REAL KZ IS :',F9.4,'   IMAG KZ IS :',F9.4)
      CALL CBES1(KRPA,J1A,Y1A)
      CALL CBES1(KRPD,J1D,Y1D)
      RJ1A=REAL(J1A)
      IJ1A=AIMAG(J1A)
      RY1D=REAL(Y1D)
      IY1D=AIMAG(Y1D)
      RJ1D=REAL(J1D)
      IJ1D=AIMAG(J1D)
      RY1D=REAL(Y1D)
      IY1D=AIMAG(Y1D)
      H1A=CMPLX(RJ1A+IY1A,IJ1A-RY1A)
      H1D=CMPLX(RJ1D+IY1D,+IJ1D-RY1D)
C
C     THE CONTRIBUTION OF THE LEAKY MODE
C     TO THE TOTAL CURRENT NORMALIZED TO THE
C     CONTRIBUTION OF THE TEM MODE
```

```
C
      RES=4./377.
      RES=  RES*(0,1)*K/KRP/KZP/(A*H1A+D*H1D)
      ARS=CABS(RES)
      WRITE(5,40) ARS
40    FORMAT(/,1X,'THE CURRENT IS :',E15.8)
      T=M
      RAT=ARS*377.*ALOG(T)/PI
      WRITE(5,47) RAT
47    FORMAT(/,1X,'THE CUR/TEM IS :',E15.8)
C
C     CHANGING THE RATIO 'D/A'
C
      M=M+1
      GO TO 41
60    CONTINUE
C
C     CHANGING THE DEPARTURE POINT IN ORDER TO
C     START THE SEARCHING FOR THE CONSECUTIVE ROOT
C
      I=I+1
      BR=BR+5
      GO TO 9
8      CONTINUE
      STOP
      END
C
C     THE SUBROUTINE CBESO  CALCULATES THE ZERO ORDER BESSEL
C     FUNCTIONS FOR A GIVEN INPUT VARIABLE Z
C
      SUBROUTINE CBESO(Z,BSJO,BSYO)
      COMPLEX Z,BSJO,BSYO,Y,W,PO,FO,CEXP
      COMPLEX CCOS,CSIN,CSQRT,CLOG,SPO,SQO,QO,CS,SN,SP1,SQ1
      PI=3.141593
      A=CABS(Z)
      BSJO=(1.,0.)
      IF(A.EQ.0.) GO TO 2
      IF(A.GT.3.) GO TO 1
      Y=Z*Z/9.
      BSJO=1.+Y*(-2.2499997+Y*(1.2656208+Y*(-.3163866
     1+Y*(.0444479+Y*(-.0039444+Y*.00021)))))
      GO TO 2
1     W=3./Z
      FO=.79788456+W*(-.00000077+W*(-.0055274+W*(-.00009512
     1+W*(.00137237+W*(-.00072805+W*.00014476)))))
      PO=.78539816+W*(.04166397+W*(.00003954+W*(-.00262573
     1+W*(.00054125+W*(.00029333-W*.00013558)))))
      BSJO=FO*CCOS(Z-PO)/CSQRT(Z)
2     CONTINUE
      BSYO=(-1.E30,0)
      IF(A.EQ.0.) GO TO 3
      IF(A.GT.3.) GO TO 4
      BSYO=.63661977*CLOG(.5*Z)*BSJO+.36746691+Y*(.60559366
     1+Y*(-.74350384+Y*(.25300117+Y*(-.04261214+Y*(.00427916
     2-Y*.00024846)))))
      GO TO 3
```

```
4     CONTINUE
      BSYO=FO*CSIN(Z-PO)/CSQRT(Z)
3     CONTINUE
      RETURN
      END
C
C       THE SUBROUTINE CBES1 CALCULATES THE FIRST ORDER BESSEL
C       FUNCTIONS FOR A GIVEN INPUT VARIABLE Z
C
      SUBROUTINE CBES1(Z,BSJ1,BSY1)
      COMPLEX Z,BSJ1,BSY1,Y,W,P1,F1,CEXP
      COMPLEX CCOS,CSQRT,CLOG,CSIN,SP1,SQ1,Q1,F,CS,SN,SP2,SQ2
      PI=3.141593
      A=CABS(Z)
      BSJ1=0.
      IF(A.EQ.0.) GO TO 2
      IF(A.GT.3.) GO TO 1
      Y=Z*Z/9.
      BSJ1=Z*(.5+Y*(-.56249985+Y*(.21093573+Y*(-.03954289
     1+Y*(.00443319+Y*(-.00031761+Y*.00001109))))))
      GO TO 2
1     W=3./Z
      F1=.79788456+W*(.00000156+W*(.01659667+W*(.00017105
     1+W*(-.00249511+W*(.00113653-W*.00020033)))))
      P1=2.35619449+W*(-.12499612+W*(-.00005650+W*(.00637879
     1+W*(-.00074348+W*(-.00079824+W*.00029166)))))
      BSJ1=F1*CCOS(Z-P1)/CSQRT(Z)
2     CONTINUE
      BSY1=(-1.E30,0)
      IF(A.EQ.0.) GO TO 3
      IF(A.GT.3.) GO TO 4
      BSY1=(-.63661977+Y*(.2212091+Y*(2.1682709+Y*(-1.3164827
     1+Y*(.3123951+Y*(-.0400976+Y*.0027873))))))/Z
     2+.63661977*CLOG(.5*Z)*BSJ1
      GO TO 3
4     BSY1=F1*CSIN(Z-P1)/CSQRT(Z)
3     CONTINUE
      RETURN
      END
C
C       THE SUBROUTINE FUNCT CALCULATES FOR EACH VECTOR KZ
C       THE VALUE OF THE FUNCTIONAL WHICH WE TRY
C       TO MINIMIZE AND ITS GRADIENT
C
        SUBROUTINE FUNCT(N,KZ,VAL,GRAD)
        COMMON KR,AA,M,BR,AR
        DIMENSION       GRAD(2)
        REAL KZ(2),K,KH
        REAL IJOA ,IJOD,IJ1A,IJ1D,IYOA,IYOD,IY1A,IY1D
        COMPLEX KR,KRA,KRD,JOA,YOA,JOD,YOD,HOA,HOD,J1A
        COMPLEX Y1A,J1D,Y1D,GR1,GR2,H1A,H1D,F,GRA1,GRA2
        BZ=KZ(1)
        AZ=KZ(2)
        PI=3.1415927
        K=2*PI
        KH=K**2+AZ**2-BZ**2
```

```
BR=SQRT(0.5*(KH+SQRT((KH**2+(2*AZ*BZ)**2))))
AR=-AZ*BZ/BR
KR=CMPLX(BR,-AR)
KRA=KR*AA
KRD=KRA*M
CALL CBES0(KRA,J0A,Y0A)
CALL CBES0(KRD,J0D,Y0D)
RJ0A=REAL(J0A)
IJ0A=AIMAG(J0A)
RY0A=REAL(Y0A)
IY0A=AIMAG(Y0A)
RJ0D=REAL(J0D)
IJ0D=AIMAG(J0D)
RY0D=REAL(Y0D)
IY0D=AIMAG(Y0D)
H0A=CMPLX(RJ0A+IY0A,IJ0A-RY0A)
H0D=CMPLX(RJ0D+IY0D,IJ0D-RY0D)
F=H0A-H0D
VAL=CABS(F)
VAL=VAL**2
CALL CBES1(KRA,J1A,Y1A)
CALL CBES1(KRD,J1D,Y1D)
RJ1A=REAL(J1A)
IJ1A=AIMAG(J1A)
RY1D=REAL(Y1D)
IY1D=AIMAG(Y1D)
RJ1D=REAL(J1D)
IJ1D=AIMAG(J1D)
RY1D=REAL(Y1D)
IY1D=AIMAG(Y1D)
H1A=CMPLX(RJ1A+IY1A,IJ1A-RY1A)
H1D=CMPLX(RJ1D+IY1D,+IJ1D-RY1D)
GR1=-H1A*(-CMPLX(BZ,-AZ)*AA/KR)
GR1=GR1-H1D*(-CMPLX(BZ,-AZ)*AA*M/KR)
GR2=GR1*(0.0,-1.0)
GRA1=GR1*CONJG(F)+CONJG(GR1)*F
GRA2=GR2*CONJG(F)+CONJG(GR2)*F
GRAD(1)=REAL(GRA1)
GRAD(2)=REAL(GRA2)
RETURN
END
```

Output Sample for Program No. 6

```
 D IS  2.0000


D/A =  10
REAL KZ IS :  -5.3197   IMAG KZ IS :   0.3963
THE CURRENT IS : 0.17374900E-02
THE CUR/TEM IS : 0.48009754E+00

D/A =  11
REAL KZ IS :  -5.3473   IMAG KZ IS :   0.3998
THE CURRENT IS : 0.16872877E-02
THE CUR/TEM IS : 0.48552414E+00

D/A =  12
REAL KZ IS :  -5.3704   IMAG KZ IS :   0.4036
THE CURRENT IS : 0.16398675E-02
THE CUR/TEM IS : 0.48900164E+00

D/A =  13
REAL KZ IS :  -5.3899   IMAG KZ IS :   0.4071
THE CURRENT IS : 0.15975309E-02
THE CUR/TEM IS : 0.49172189E+00

D/A =  14
REAL KZ IS :  -5.4066   IMAG KZ IS :   0.4106
THE CURRENT IS : 0.15589255E-02
THE CUR/TEM IS : 0.49370289E+00

D/A =  15
REAL KZ IS :  -5.4212   IMAG KZ IS :   0.4135
THE CURRENT IS : 0.15255773E-02
THE CUR/TEM IS : 0.49577245E+00
```

References

[1] S. A. Schelkunoff, Electromagnetic Waves, D. Van Nostrand, New York, 1943.

[2] L. Marin, "Transient Electromagnetic Properties of Two Parallel Wires," Sensor and Simulation Note 173, Dikewood Corporation, Westwood Research Branch, Los Angeles, March 1973.

[3] R. F. Harrington, Field Computation by Moment Methods, Macmillan Co., New YOrk 1968.

[4] R. F. Harrington, Time-Harmonic Electromagnetic Fields, McGraw-Hill, New York, 1961, p. 244.

[5] R. F. Harrington, Time-Harmonic Electromagnetic Fields, McGraw-Hill, New York 1961, p. 234.

[6] Rushdi et al., "Leaky Modes in Parallel Plate EMP Simulators," IEEE Trans. Electromagnetic Compatibility, vol. EMC 20, August 1978, pp. 443-451.

[7] N. Marcuvitz, "On Field Representations in Terms of Leaky Modes or Eigenmodes," IEEE Trans. on Antennas and Propagation, vol. AP-4 1956, pp. 192-194.

[8] K. S. Kunz, "Asymptotic Behavior of the Current on an Infinite Cylindrical Antenna," Journal of Research of the National Bureau of Standards, vol. 67D, July-August 1963, pp. 417-431.

[9] S. A. Schelkunoff and H. T. Friis, Antennas: Theory and Practice, John Wiley & Sons, Inc., N.Y. 1952, p. 109.