AD-A105 118 HARRY DIAMOND LABS ADELPHI MD F/G 17/2
AN ADVANCED 500-MHZ-BANDWIDTH FIBER-OPTIC SIGNAL LINK FOR EMP A--ETC(U)
JUL 81 J C BLACKBURN MIPR-80-614
UNCLASSIFIED HDL-TR-1940 NL

AD-A105118

UNCLASSIFIED

SECURITY CLASSIFICATION OF THIS PAGE (When Data Entered)

REPORT DOCUMENTATION PAGE

READ INSTRUCTIONS BEFORE COMPLETING FORM

1. REPORT NUMBER: HDL-TR-1940

2. GOVT ACCESSION NO.: AD-A105 118

3. RECIPIENT'S CATALOG NUMBER:

4. TITLE (and Subtitle): An Advanced 500-MHz-Bandwidth Fiber-Optic Signal Link for EMP and General Laboratory Applications

5. TYPE OF REPORT & PERIOD COVERED: Technical Report

6. PERFORMING ORG. REPORT NUMBER:

7. AUTHOR(s): James C. Blackburn

8. CONTRACT OR GRANT NUMBER(s): MIPR-80-614; PRON: WJO-5601WJA9

9. PERFORMING ORGANIZATION NAME AND ADDRESS: Harry Diamond Laboratories, 2800 Powder Mill Road, Adelphi, MD 20783

10. PROGRAM ELEMENT, PROJECT, TASK AREA & WORK UNIT NUMBERS: Program Ele: 62710H

11. CONTROLLING OFFICE NAME AND ADDRESS: Director, Defense Nuclear Agency, Washington, DC 20305

12. REPORT DATE: July 1981

13. NUMBER OF PAGES: 27

14. MONITORING AGENCY NAME & ADDRESS (if different from Controlling Office):

15. SECURITY CLASS. (of this report): UNCLASSIFIED

15a. DECLASSIFICATION/DOWNGRADING SCHEDULE:

16. DISTRIBUTION STATEMENT (of this Report): Approved for public release; distribution unlimited.

17. DISTRIBUTION STATEMENT (of the abstract entered in Block 20, if different from Report):

18. SUPPLEMENTARY NOTES: HDL Project: 257023. This work was performed between September 1978 and November 1979. This research was sponsored by the Defense Nuclear Agency under Subtask YX959, Work Unit 06, SXTF, Fiber Optics.

19. KEY WORDS (Continue on reverse side if necessary and identify by block number): Fiber optic; Modal noise; Laser; Fiber-optic communications

20. ABSTRACT (Continue on reverse side if necessary and identify by block number):

Means have been found to control modal noise in a fiber-optic system using single-mode lasers. Laser coherence is reduced by dithering, and careful attention is given to fiber connections. These techniques, in combination with miniaturization, have produced a compact wideband analog fiber-optic link that is well suited to signal transmission where dielectric transmission is dictated by electrical noise, need for complete isolation, TEMPEST considerations, or a requirement for wide bandwidth. The optical transmitter has a volume of 550 cm³, contains an optically remote-controlled 0- to 45-dB input attenuator and calibrator, and will operate for 2 hr on its internal batteries. Maximum input sensitivity is a few millivolts into 50 ohms, system risetime is 0.8 ns,

DD FORM 1 JAN 73 1473 EDITION OF 1 NOV 65 IS OBSOLETE

UNCLASSIFIED

SECURITY CLASSIFICATION OF THIS PAGE (When Data Entered)

and dynamic range is greater than 30 dB. Transmission distances up to kilometers are possible, although fiber dispersion will reduce bandwidth at long distances.

DTIC
ELECTE
OCT 1 3 1981
S D
B

Accession For
NTIS GRA&I ☑
DTIC TAB ☐
Unannounced ☐
Justification

By
Distribution/
Availability Codes
Dist | Avail and/or Special
A

CONTENTS

Page

1. INTRODUCTION 5
2. SYSTEM DESCRIPTION 6
3. CIRCUITRY 12
   3.1 Input Balun 12
   3.2 Input Attenuator and Calibrator 12
   3.3 Optical Signal Transmitter 14
   3.4 Optical Signal Receiver 15
   3.5 Digital Control System 16
   3.6 Modal Noise Control 17
4. FIELD-TEST RESULTS 18
5. FUTURE PLANS 18

LITERATURE CITED 19
DISTRIBUTION 21

FIGURES

1. Transmitted signal waveforms 6
2. Block diagram of wideband analog optical link 7
3. Fiber-optic signal transmitter (laser side) 8
4. Fiber-optic signal transmitter (attenuator side) 9
5. Optical receiver and control transmitter 11
6. Calibrator/attenuator board (back view) 13
7. Calibrator/attenuator board (front view) 13
8. Calibrator waveform 15

SCHEMATICS

1. Stabilized laser transmitter with modal noise-suppression oscillator 8
2. Logic and command circuitry (transmitter) 9
3. Attenuator and calibration generator 10
4. Logic and command circuitry (controller) 11
5. Optical signal receiver 12

1. INTRODUCTION

The advantages of dielectric signal transmission, particularly by optical dielectric waveguide, are numerous: optical fibers are very small and lightweight, they provide far greater bandwidth than coaxial cables, they are unaffected by electromagnetic pulse (EMP) and other electrical noise, they do not radiate TEMPEST, they provide for complete electrical isolation (up to megavolts), and they do not appreciably perturb the free-space fields through which they pass (a necessary feature in some EMP and system-generated EMP instrumentation situations). All these advantages are made more attractive now that the price of even high-grade optical fibers has dropped to well below a dollar a foot.

The disadvantage of fiber transmission is that a great deal of electronics and electro-optics is needed to transform the electrical signal into an optical one and then, at the receiving end, back into electrical form. This paper describes a reasonable and adaptable system which will interface with many user needs. The design of the instrument is based on experience gained in the design and use of four previous instruments,[1-4] three of which have successfully withstood extensive field use. The link which introduced the use of wide-band fiber optics to the field of EMP studies[1] was used successfully for several years until replaced by an improved system.[2] These six 120-MHz remote-controlled light-emitting diode (LED) systems have been in constant use for a variety of EMP tests since they were built in 1977; they have had negligible down-time during this period. Originally designed for the APACHE high-altitude EMP assessment, these LED systems have since been used for TACFIRE, PATRIOT, the XM-1 tank, and several elements of the MSEP (Multiple Systems Evaluation Program). Sixteen 400-MHz laser systems[3] have also been in frequent use since 1977; these instruments have had few major failures, but admittedly have needed constant readjustments owing to the poor characteristics and rapid aging of the multi-mode lasers then available (the instrument to be described uses modern single-mode lasers). The link described in HDL-TM-79-24[4] has not to date been subjected to field use, but it has operated properly in the laboratory for over a year, and much information in regard to modal noise was obtained in designing and building it.

The system described here, although complete and functional, is actually only a step in the process of providing the fiber-optic requirements for the SXTF.* To provide for the needs of SXTF, additional factors, primarily radiation hardening, must be taken into account; a considerable amount of this work has been accomplished, but the reporting will be deferred until all work is completed, at which time a sequel to this report will be published.

The optical link provides a clean fast-rise signal, as shown by the waveforms of figure 1. These oscillograms were obtained from transmissions through a 30-m length of single-fiber cable. The bandwidth available in modern fibers (well over 1 GHz/km) would allow transmission over much greater distances, with little decrease in bandwidth. Fiber attenuation is of secondary importance inasmuch as the optical receiver has a filter of more than 10-dB attenuation at its optical input; this filter can be reduced in value to compensate for additional fiber attenuation. The data of figure 1 were obtained with a 500-MHz oscilloscope and a pulser with 400-ps risetime. Positive and negative pulser outputs are equal within less than 1 dB.

[1] *J. C. Blackburn, A 120-MHz Bandwidth Linear Signal Transmission System Using Fiber Optics, IEEE Trans Instrum Meas,* **IM-24**, *3 (September 1975).*

[2] *J. C. Blackburn and R. Martin, A Versatile Fiber-Optic Signal Link for EMP Testing and General Application, Harry Diamond Laboratories, HDL-TM-80-5 (June 1980).*

[3] *J. C. Blackburn, A Radiation-Hardened Fiber-Optic System Having a 400-MHz Bandwidth and Linear Response, IEEE Trans Instrum Meas,* **IM-26** *(March 1977), 64-70.*

[4] *J. C. Blackburn, A 300-MHz 1-km Long Fiber-Optic Link for Analog Signals, Harry Diamond Laboratories, HDL-TM-79-24 (December 1979).*

Satellite X-ray Test Facility.

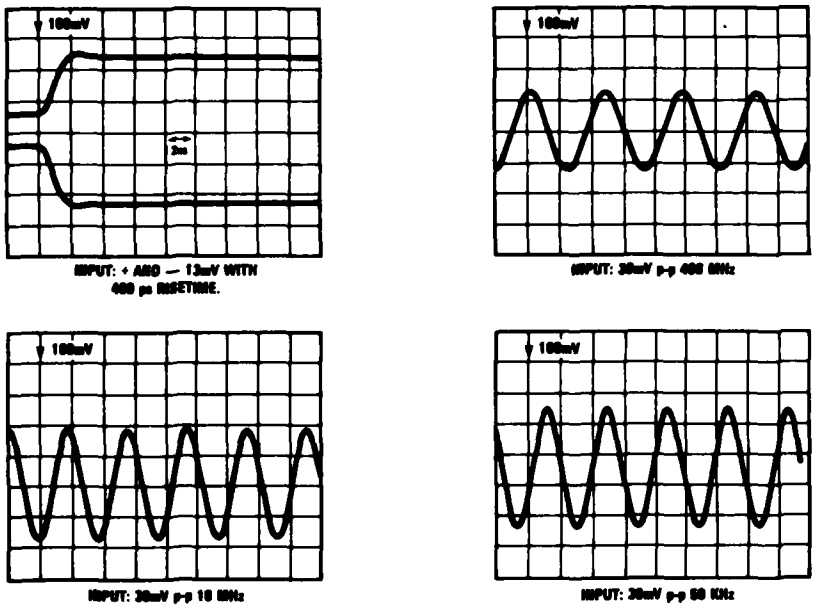

Figure 1. Transmitted signal waveforms (500-MHz oscilloscope: 7904 and 7A19).

2. SYSTEM DESCRIPTION

The block diagram of figure 2 summarizes the circuitry and functions of the signal link. Two optical paths, connected by separate fibers, carry both the high-frequency signals and the low-rate digital commands.

The "front panel" of the transmitter (fig. 3) has two SMA connectors for the input lines, a large fiber connector for the graded-index signal fiber, a small fiber connector for the control fiber, and an electrical connector for charging the batteries. The circuit board at the front right-hand side is the laser transmitter, containing the circuitry of schematic 1. The single-mode laser and its stabilization detector are affixed into a brass block near the center of this board. The small board at the back of the case is the logic, as shown in schematic 2. The batteries (adequate for several hours' use) are at the back left.

Figure 4 shows the input balun coil (which has now been replaced by a better design—see sect. 3.1), the attenuator and calibrator board of schematic 3, and the opposite sides of the logic board and battery pack. Signal flow is from the input SMA connectors through the balun into the calibrator/attenuator board. Here the signal is attenuated by the selected amount (in 3-dB steps from 0 to 45 dB), and the calibration signal is inserted through a 20-dB directional coupler. The signal (and calibration when selected) leaves the calibrator/attenuator board as a signal in the range from 0 to approximately 10 mV and travels to the transmitter board; here the signal is amplified by about 30 dB and applied to the laser through a passive compensating network. This board also contains the optical stabilizing detector and associated feedback amplifier which holds the laser at a nearly constant output independent of temperature variations, aging, and battery voltage fluctuations. The optical signal from the laser is conveyed to the large fiber connector by a single graded-index fiber.

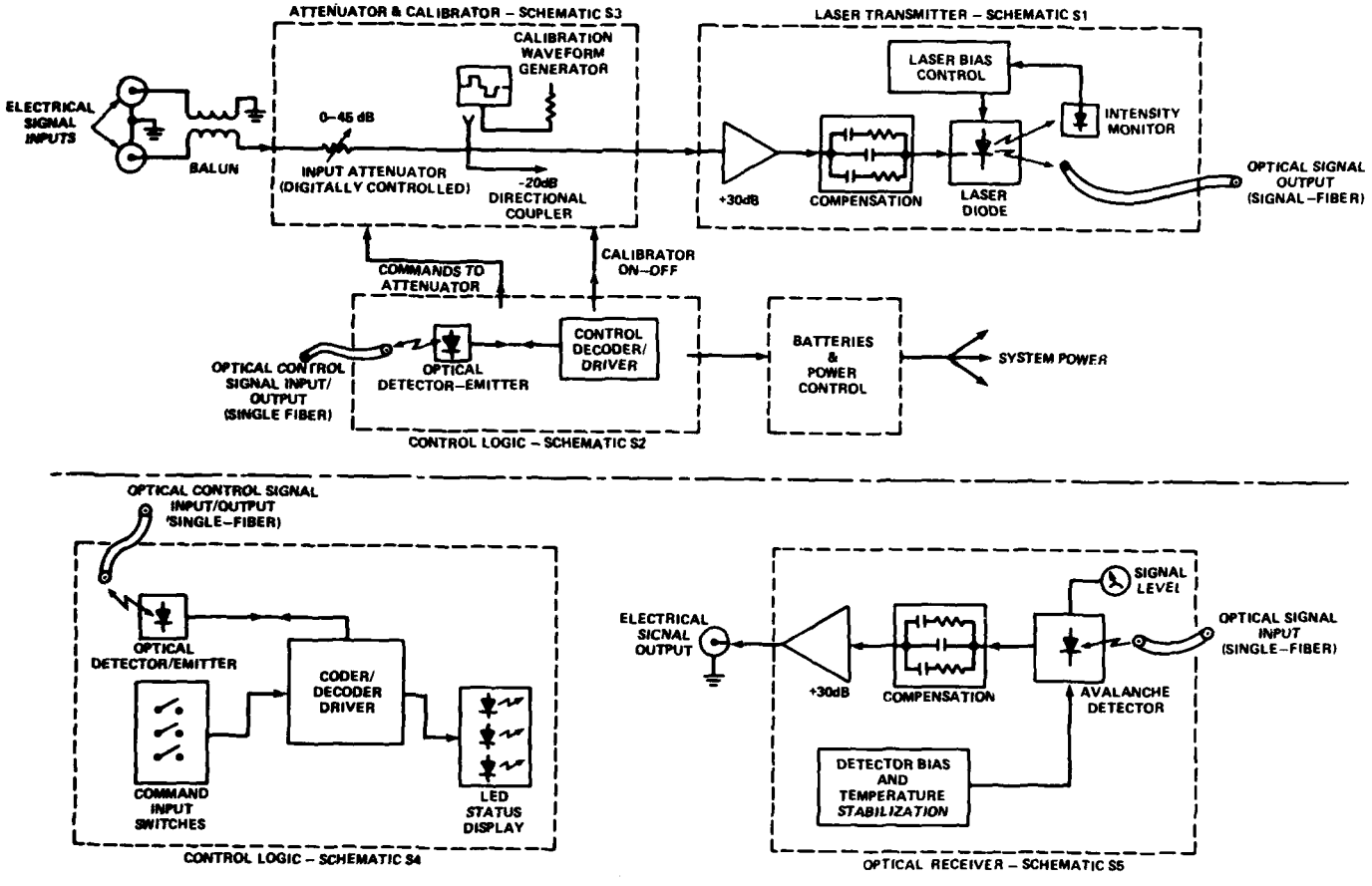

Figure 2. Block diagram of wideband analog optical link (upper half: remote unit; lower half: operator's unit).

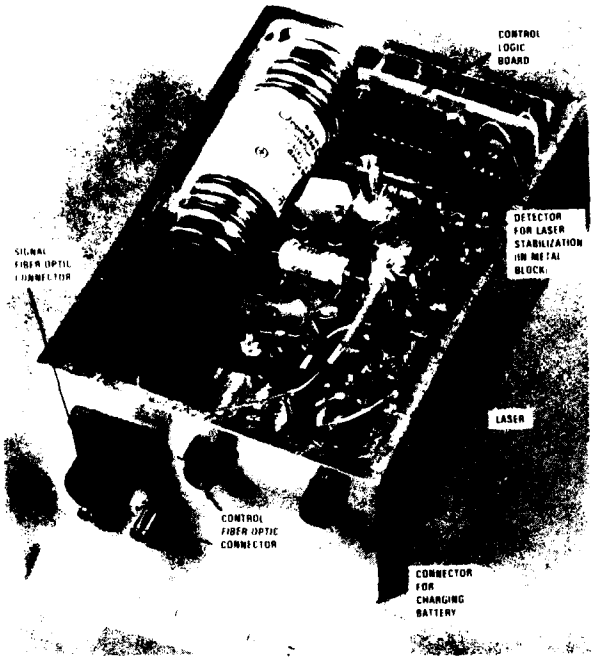

Figure 3. Fiber-optic signal transmitter (laser side).

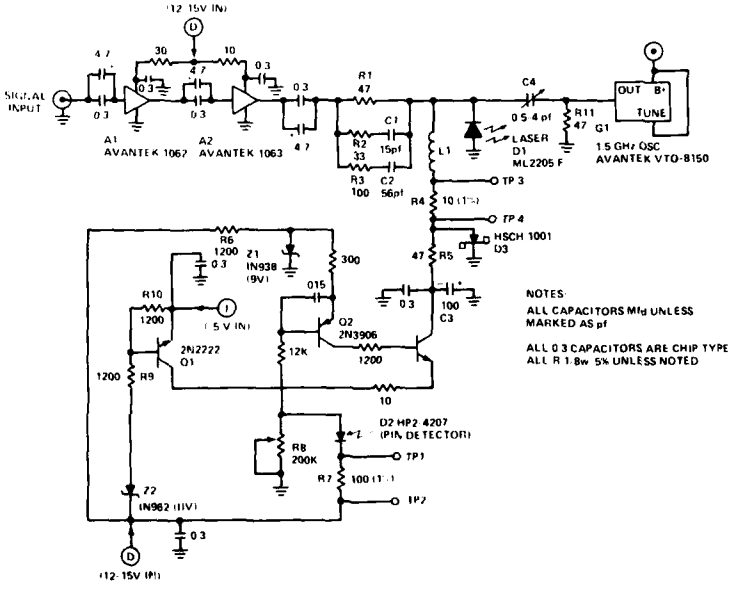

Schematic 1. Stabilized laser transmitter with modal noise-suppression oscillator.

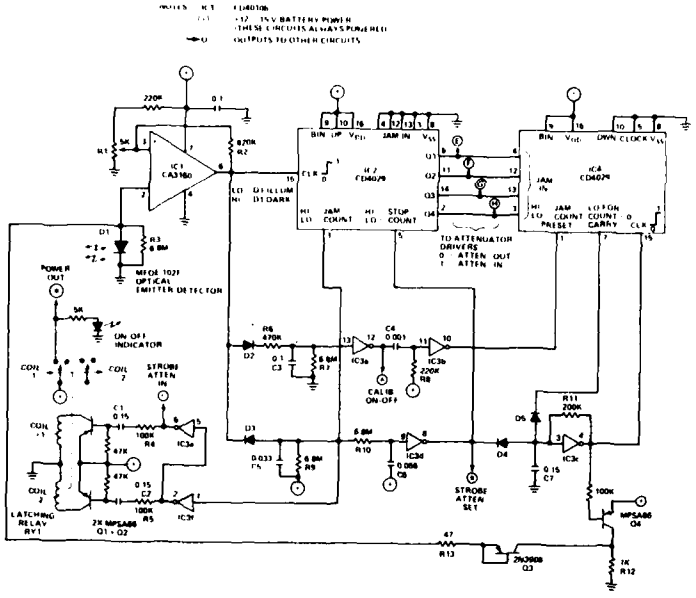

Schematic 2. Logic and command circuitry (transmitter).

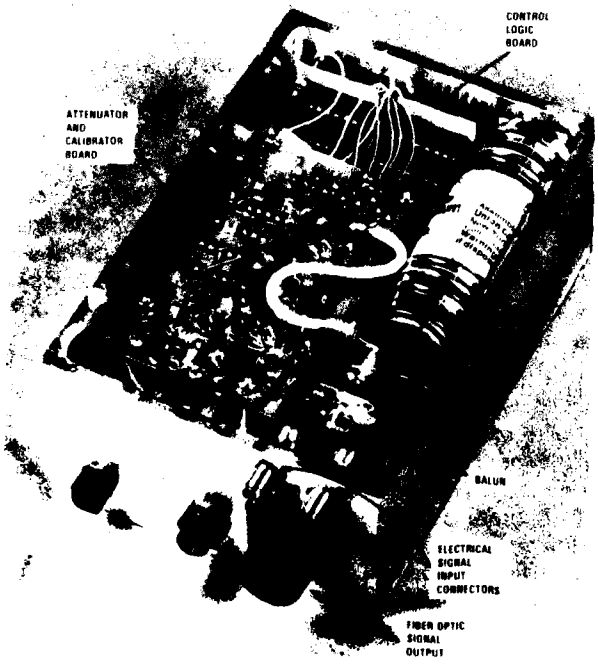

Figure 4. Fiber-optic signal transmitter (attenuator side).

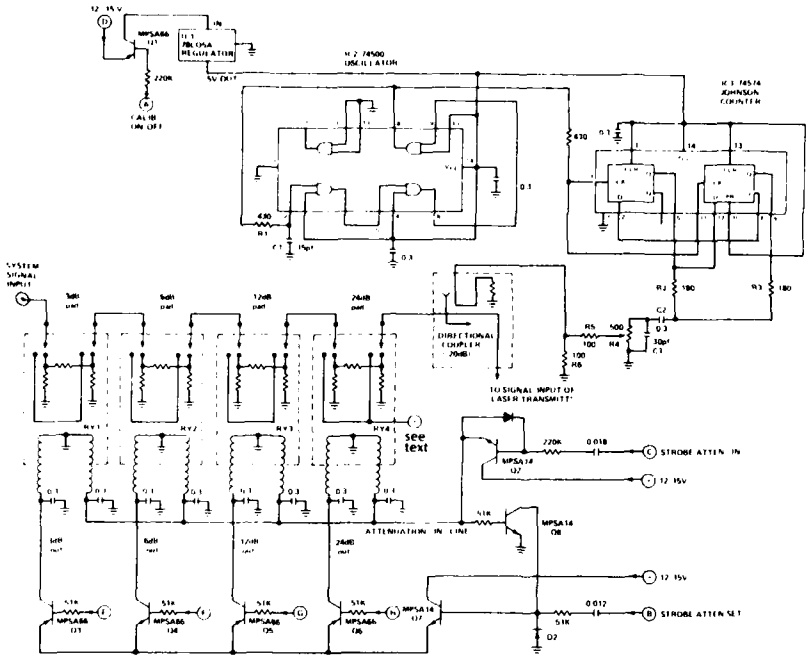

Schematic 3. Attenuator and calibration generator.

An LED is integral to the small fiber connector. This LED is used both as a detector and an emitter, receiving coded optical commands and later transmitting light pulses to verify execution of the attenuation code. Signals to and from this LED are decoded by the logic circuits of schematic 2. A single inexpensive multimode fiber is adequate for conveying the logic signals between the transmitter and the receiver/control unit.

The receiver/controller of figure 5 has all the control switches for the link. The front-panel controls allow one to (1) turn the entire system on and off, (2) operate a calibration source contained in the transmitter, and (3) select an input attenuation level between 0 and 45 dB. All control signals are sent to the transmitter as pulse-coded light flashes carried by the control single fiber.

The switch marked "interrogate" energizes two functions in the transmitter: it turns on the calibrator, causing an amplitude-calibrating signal to be sent through the link, and it interrogates the data received by the attenuator logic; if the logic has decoded the attenuation command correctly, the LED above each "in" attenuation switch will light. The circuitry for the control functions of the receiver/controller is shown in schematic 4.

The receiver (schematic 5) consists of an avalanche detector with its temperature-stabilizing circuitry and a two-stage amplifier. A fiber-to-fiber connection is avoided here since modal noise would likely be increased by the imperfect mode conversion in connectors;[5] the fiber is instead fitted directly to the window of the detector by a modified Deutsch connector. It is unfortunate that one of the fastest APD detectors, the RCA 30908E, has an integral fiber connector and is thus prone to excessive modal noise.

[5] *R. E. Epworth, Phenomenon of Modal Noise in Fiber Systems, IEEE Topical Meeting, Fiber Optic Communication (March 6-8, 1979), Washington, D.C.*

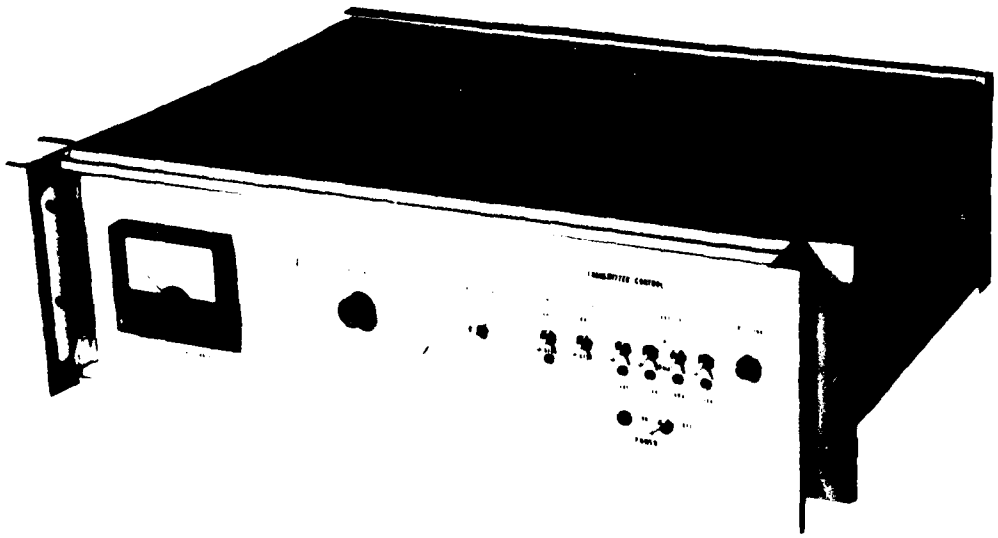

Figure 5. Optical receiver and control transmitter.

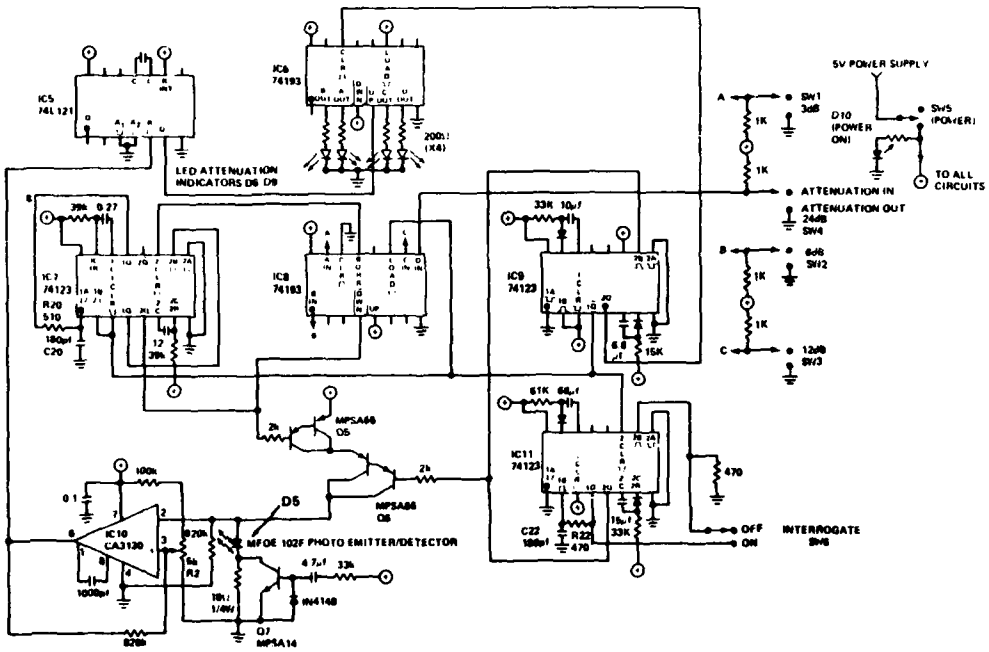

Schematic 4. Logic and command circuitry (controller).

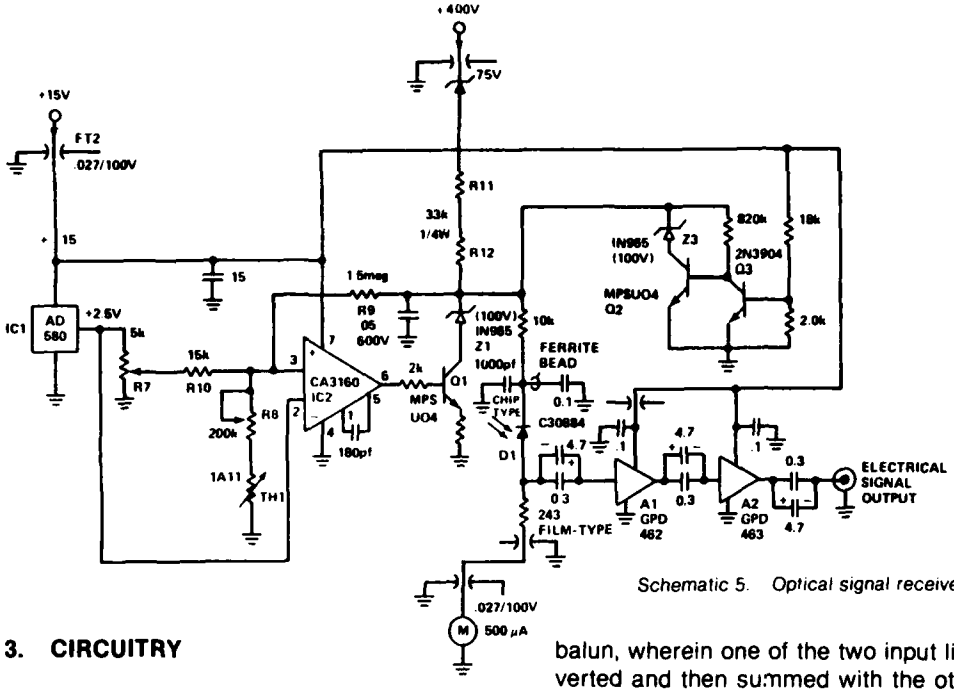

Schematic 5. Optical signal receiver.

3. CIRCUITRY

3.1 Input Balun

Since the transmitter is designed to be used in high noise environments, it is imperative that a balanced line be used for the interconnection between the external sensor and the transmitter; some device is needed to make the conversion from balanced to unbalanced circuitry. The simplest way to do this is with a "balun transformer," as shown schematically in the block diagram of figure 2. Although the transformer shown in figure 1, wound as a transmission line, is commonly used for this purpose, it has a number of fundamental limitations which should be taken into account. First, this transformer is not matched for the common mode (noise) signal (which is a particularly severe problem where the signal source, the sensor, is not matched) and second, because of the differing signal propagation speeds between the two twisted leads and between both leads and ground, there tends to be an apparent preshoot in the output of such a transformer.[6] A bridge-type balun, wherein one of the two input lines is inverted and then summed with the other input line in a resistive bridge, avoids both these problems and appears to be a much more satisfactory solution. At the present time the transmission-line-wound type of input is being used, but it is expected that the bridge-type device will soon be substituted. The two types of baluns are discussed at length by Vanderwall.[7]

3.2 Input Attenuator and Calibrator

Schematic 3 shows the miniature 0- to 45-dB attenuator and the calibrator circuitry. Since the layout and assembly of the circuits are somewhat unusual (and also critical), front and back views of the board are given in figures 6 and 7. The attenuator pads, in the form of ceramic chip assemblies, are located between the relay leads with "zero length" connections; this is not only compact, but also probably provides the least pulse distortion. The relays are of the magnetic latching type, thus requiring only pulsed currents

[6] *R. E. Matick, Transmission Line Pulse Transformer—Theory and Applications, IEEE Proceedings,* **56**, *1 (January 1968).*

[7] *J. Vanderwall, A Very Wideband Balun Circuit Featuring Matched and Isolated Inputs, Harry Diamond Laboratories/Defense Nuclear Agency, Fiber Optics Conference (March 1980).*

Figure 6. Calibrator/attenuator board (back view).

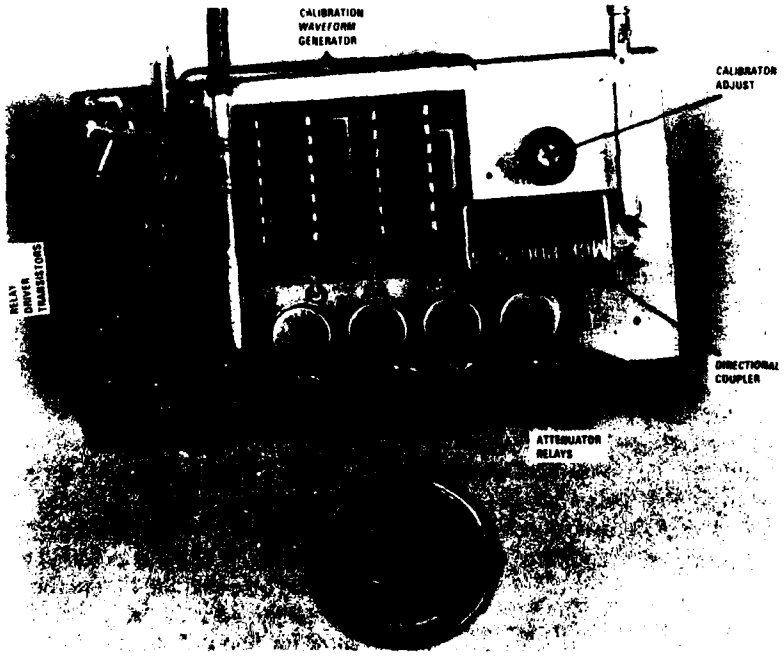

Figure 7. Calibrator/attenuator board (front view).

and reducing battery drain. PIN diode switching of the attenuation was not used because it was not possible to obtain enough effective capacitance to allow for the bottom end of the circuit passband—a few kilohertz.

An additional advantage of this attenuator construction is that it minimizes the surface of the signal-carrying conductor which is exposed to Compton electrons when irradiated; another report[8] has shown that this was a significant problem with more massive commercial attenuators.

A directional coupler is used to insert the calibrator signal directly into the transmitter input, at the end of the attenuator chain. Since the attenuator resistor chips are extremely stable, as are the characteristics of the input balun, the calibrating signal passes through all elements which are likely to undergo changes in attenuation. The calibrator's signal could not be injected at the attenuator input without great complication, since the 45-dB attenuation range is greater than system dynamic range—a calibrator would be necessary whose output changed with attenuation setting.

The calibrating waveform is supplied by a Johnson counter (IC3 of schematic 3) driven by an oscillator formed by the cascaded stages of IC2. The outputs of the Johnson counter are summed by R2, R3, R4; attenuated by R5, R6; and applied directly into the transmitter's input. The waveform at the junction of R2, R3 is of the sequence 0, 1U, 2U, 1U, 0, etc., where all steps are of equal width, depending on the oscillator period, and where U represents an arbitrary unit signal amplitude. When coupled through by C2 this waveform averages around the 1U value and becomes the desired −1U, 0, +1U sequence (as shown in fig. 8). IC2 and IC3 are supplied with regulated voltage by IC1 and are switched "on" or "off" by Q1 and the logic of schematic 2. Tests have shown that the amplitude out of R4 remains constant within ±1 dB over the temperature range of 0 to 40 C. Slight changes in the value of R2 or R3 are sometimes necessary to optimize symmetry; reference to figure 6 shows that these resistors are easily accessible during construction. Some aspects of the circuit, such as the 430-ohm resistor between clock generator and counter, are admittedly unusual, but have been checked with a considerable selection of logic chips from different companies and different lots with satisfactorily consistent results.

3.3 Optical Signal Transmitter

The optical signal transmitter is shown in schematic 1. The circuitry can be broken into five functions: input amplifier (A1 and A2), compensating network (R1 through R3 and C1, C2), the laser itself (D1), the laser output stabilizer (D2, Q1 through Q3, etc.), and the dither source for modal noise suppression (G1).

Amplifiers A1 and A2 are hybrid units made by Avantek, Inc. Each has a gain of about 11 dB and an upper frequency response down only about 1 dB at 1 GHz; the low-end response is determined by the coupling capacitors, These amplifiers are mounted in the same type of microstrip construction shown in figure 3. With the two-stage amplifier shown, input signal levels on the order of a milivolt are useable with the transmitter; if smaller signals need to be observed, an additional 1062 stage can be added ahead of the present one.

The compensating network between A2 and the laser corrects for both the capacitance and inductance of the laser and a small amount of pulse droop in the attenuators. It would be desirable to replace C1 and C2 with physically very small variable capacitors to allow for fine compensation, although at present fixed units are used satisfactorily.

[8] *J. C. Blackburn and A. Bromborsky, Design and Construction of a Radiation Hardened Analog Fiber Optic Data Link, IEEE Conference on Nuclear and Space Radiation Effects (July 1977).*

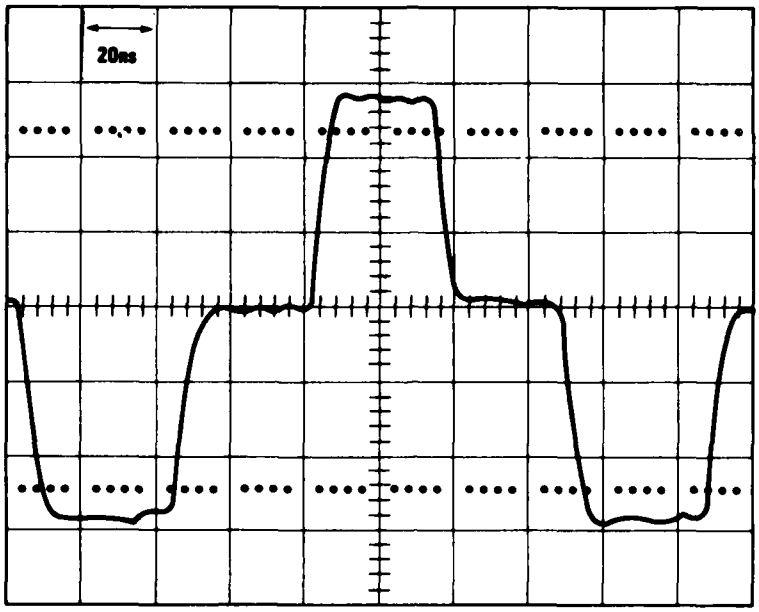

Figure 8. Calibrator waveform as observed at junction of R2 and R3, schematic 3.

The design of the laser output stabilizer avoids the use of operational amplifiers. A later model of this transmitter, modified but little, will be used in an x-ray envionment; it was assumed that excess stages and excess open-loop gain would make the circuit more susceptible to transient radiation effects on electronics (TREE) and system-generated EMP (SGEMP) problems.

PIN diode D2 directly views the monitor output of the laser diode (see fig. 3). At the normal operating level of the laser (around 0.6 mW output from the fiber), D2 draws about 100 μA through R8. This current is independent of the supply voltage, since the diode is an excellent current source. Z1 fixes the voltage at the base of Q2, and the drop across R8 is compared with this voltage in Q2, with the output further amplified in Q3 and applied to the laser through R5, R4, and L1. D3 is to prevent excessive reverse bias being applied to the laser when A2 is initially powered up. R4 provides a laser current monitor point, as does R7 for detector current. Q1 serves as an on-off switch for the −5 V supply; Q1 is biased on only when the +15 V supply is energized.

Oscillator G1 provides a very high-frequency (1.5 GHz) current drive component to the laser, along with the current drives applied by A2 and Q3. This high-frequency current drive, the level of which is adjusted by C4, has been found beneficial in reducing modal noise[9]—this will be discussed in section 3.6 of this paper.

3.4 Optical Signal Receiver

Schematic 5 shows the optical receiver (which is located in the center of the receiver/controller of fig. 5). Avalanche detector D1 is reverse-biased by the bias-control circuitry of IC1, IC2, Q1, etc., and its output is applied to A1 and A2, which are hybrid circuits of the same types as A1 and A2 of the transmitter. The output of the amplifier chain is coupled to the electrical signal output.

[9] *J. Vanderwall and J. C. Blackburn, Suppression of Some Artifacts of Modal Noise in Fiber-Optic Systems, Optics Letters, 4, 9 (September 1979).*

The purpose of the bias-control circuit is to supply to D1 a precisely controlled reverse bias of about 250 V, which is made to increase with temperature to compensate for the decrease in D1's gain (for a fixed bias) with temperature. A reference current is applied to IC2 by IC1, where it is summed with a current through R8 and TH1 (dependent on temperature) and a current through R9 (dependent on detector bias voltage). The thermistor TH1 has a negative coefficient of resistance such that it will cause the detector voltage to rise for an increase in temperature. The action of Z1 is to decrease the emitter-collector voltage and dissipation of Q1. Q2 and Q3 crowbar the detector voltage to 100 V if the +15 V supply fails; without this circuit, if the +15 V supply should fail, IC2 would not be able to forward-bias Q1, and the detector voltage would rise to a maximum, causing detector failure.

Since the signal levels at D1, A1, and A2 are small, liberal use is made of feedthrough capacitors to keep noise out of the receiver enclosure. It is also suggested that a Pi-type line filter be used where the ac power line enters the receiver/controller enclosure. A line filter, along with the feedthrough filters into the receiver enclosure, should avoid noise problems.

3.5 *Digital Control System*

The optical commands which drive the transmitter's electronics are generated by the controller, which is the right-hand portion of the receiver/controller of figure 5. The commands are sent as a pulse-code-modulated light beam coupled by optical fiber to the remotely located transmitter. An unusual feature is that at both controller and transmitter an LED is used both as an emitter and a detector, with time multiplexing to allow a single fiber to carry signals in both directions.

When the system is switched "on" by SW5, the sequence is as follows (with reference to schematics 2 and 4): LED D5 lights and remains lighted for several hundred milliseconds while the interval of IC9, section 1, runs out; when IC9, Q1 goes high, IC7 begins to oscillate, applying a 500-Hz square wave to D5 via Q5 and Q6; this on-off-on flashing of D5 continues until counter IC8 counts a number of flashes equal to the number preset by the attenuation command switches SW1-SW4; when the preset number has been counted, the borrow line of IC8 goes low, stopping the square wave and the flashing (and leaving D5 lighted).

Meanwhile, at the transmitter end, D1, through the optical fiber connection, has observed the light emitted by D5. Initially, the output of IC1 goes low, the low is passed through D3 to IC3f, and the output of IC3f momentarily pulses the magnetic latching relay to cause transmitter power to turn on. When the output of IC1 begins to pulse (in response to the flashing of D5) the long time constant of C5 and R9 prevents the pulses from being applied to IC3f; however, the pulse count is applied directly to counter IC2. Finally, the time constant of R10 and C6 expires, the output of IC3d goes high, the counter (IC2) is disabled, and the strobe signal enters the states at the output of IC2 into the magnetic latching attenuator relays of schematic 3. At this point, the transmitter has been powered up and the attenuation command has been loaded into the latching relays.

If one now wishes to operate the calibrator and/or check that the proper attenuation command has been received, the interrogate switch (SW6) is closed, which causes IC11 to oscillate at approximately 1 Hz. When IC11 Q2 goes low, Q6 is turned on, allowing D5 to light; when Q2 goes high, the drive is removed from D5, and IC9 Q2 momentarily applies a clear to counter IC6, setting it to zero and thus readying it to count pulses. This sequence continues as long as interrogate is turned on.

At the transmitter end, when the output of IC1 goes high (in response to the extinguishing of D5) D2 charges C3 through R6,

ultimately causing the output of IC3a to go low; this causes (1) the calibrator to turn "on" (via Q1 of schematic 3) and (2) the output of IC3b to go high momentarily while C4 charges. The high out of IC3b causes counter IC4 to load the output of IC2. When C4 is charged, IC3b goes low, the counter is enabled, and the carry output of IC4 will go high (unless the output of IC2 is zero). When the carry output goes high, diode D5 ceases to conduct, and IC3c begins to oscillate at about 500 Hz; its output is applied to IC4 (which counts the pulses) and Q4 (which flashes LED D1). When the number of pulses equals the preset in IC4, the carry output goes low, and current through D5 stops oscillator IC3c and the flashing of D1. Q3, a diode-connected transistor, forms a low-leakage diode, ensuring that the leakage through Q4, when it is turned off, does not reach D1 and interfere with its function as a detector.

At the controller, D5 has functioned as a detector and observed the pulses emitted by D1, applying the count to IC6. The count of IC6 is displayed on the LED's D6 to D9. If the attenuation command has been properly received, the attenuation indicated by D6 to D9 will agree with that selected by the switches SW1 to SW4.

When the system is switched "off" D5 is extinguished, the output of IC1 goes high, the time constant of C5 and R9 expires, and the output of IC3e goes low; this does two things: (1) it pulses the power relay "off" and (2) it strobes all the attenuator relays "in." Having maximum attenuation inserted when the system is "off" helps to avoid damage from transient signals.

3.6 *Modal Noise Control*

Modal noise, previously cited,[5,9] is a new subject of investigation, having become a major problem only after single-mode lasers came into frequent use, roughly in the last year or so. The desirable properties of these lasers—stability, linearity, etc.—are accompanied by a seemingly innocuous (or even desirable) property—high source coherence, a result of the narrow spectral width. As Epworth points out,[5] and as we have verified, this coherence exacerbates the speckle-pattern effects which give rise to modal noise. Multimode lasers or LED's have a wider bandwidth, reducing or eliminating modal noise, but these devices do not have the single-mode laser's high output, linearity under modulation, and capability for high modulation rate. It must be understood that modal noise is not a problem with lasers, but a problem with fiber and fiber joints that becomes readily apparent when combined with a coherent source.

Given the current state of understanding of modal noise and the characteristics of single-mode lasers it seems desirable for the experimenter to obtain and test, under actual use conditions, specimens of what appear (on the basis of manufacturer's data sheets) to be desirable lasers, finally picking the best performer. Since no standards exist for specifying or measuring modal noise, and since the most minute details of the laser's wavelength and mode structure variation are likely of critical importance, the manufacturer's specifications often only hint at the results to be obtained. It should be noted also that noise, including modal noise, is often of less importance in digital signalling than in analog; designs which are satisfactory for one situation may be most unsatisfactory for the other.

We have also experimentally determined a number of precautions in regard to the means of making fiber-to-fiber connections. A first rule is to minimize the number of such connections; a second point is that in our experience the Deutsch Company optical connectors are more satisfactory than butt-type connectors. In a private communication, M. Holtzman of Deutsch showed that their connector design was conducive to maintaining the mode structure between the joined fibers;

[5] *R. E. Epworth, Phenomenon of Modal Noise in Fiber Systems, IEEE Topical Meeting, Fiber Optic Communication (March 6-8, 1979), Washington, D.C.*

[9] *J. Vanderwall and J. C. Blackburn, Suppression of Some Artifacts of Modal Noise in Fiber-Optic Systems, Optics Letters, 4, 9 (September 1979).*

since mode-selective loss gives rise to modal noise, this is very important. Interestingly, Holtzman revealed this information before (as best I know) anyone had identified the modal noise problem.

Based on our experiments, we find that a particularly important place to avoid butt-type connectors is at the receiving PIN or APD detector. It is our practice to bring the end of the fiber to the window of a nonpigtailed detector, avoiding altogether a fiber-fiber interface. Given the small numerical aperture of the fibers which are capable of high-frequency transmission, the light in the fiber's exit cone will fall within the senstitive area of most detectors—this is essential, since if some of the modes literally miss the detector, one certainly has a mode-selective loss in operation.

Although single-mode fibers might appear to be a panacea for modal noise (you cannot have interference between modes if there is only one mode), one must be careful of this approach also—the single-mode tends to split into two modes when the fiber is subjected to the vicissitudes of normal experimental use (bends, pressure, etc.). If two modes are developed, extreme modal noise may result because of the possibility of total destructive interference between the two modes.

4. FIELD-TEST RESULTS

The signal link described here was initially used in the field for current-injection tests of the Defense Satellite Communications System (DSCS) II Communications Satellite, where it performed well—the only failures or difficulties were the result of the control fiber cable connector being broken, a readily repairable situation. Noise and distortion were low enough that the hard-wire (coaxial cable coupled) and fiber-optic-coupled oscillograms were not readily distinguishable from one another on the basis of noise or distortion in the optical link.

As usual, however, some avenues to improvement became obvious. It was clear that it would be preferable to use a single fiber-optic cable containing two fibers (such as Seicor-type 212) to carry both signal and control functions. The link was subsequently changed to use such cable; this change not only afforded the convenience of a single-cable interconnect, it also eliminated the cable and connector which had broken during the field test. We also found that a good portion of the ripple in the calibration signal waveform is contributed by the directional coupler used for injecting the calibration signal. This ripple, although low by rf standards, is sufficient to be bothersome in measuring calibration peak-to-peak height. A resistive network can be used to inject the signal instead of the directional coupler.

5. FUTURE PLANS

Future uses dictate the incorporation of multiple balanced signal inputs with remote selection via the control fiber—we intend to use a straightforward extension of the logic to do this. We have also considered that the attenuation verification (in the interrogate mode) determines only that the commands are correct at the output of IC2 and not that the relays have thrown. It is rather unlikely that the relays would fail to obey the logic states at IC2, but if deemed necessary the actual relay state can be monitored by a small current applied through a resistor to the relay tie-bus (indicated by · on RY4 of schematic 3). There would be a trade-off for this in that the stray capacitance of the resistors would produce a modest pulse distortion which might not be completely removed by compensation.

As mentioned at the outset, we are continuing to test both the electronics of the transmitter and the optical fibers for their performance in ionizing radiation. By selecting the most inherently hard fibers and components, circuit design, and finally brute force shielding

with high-Z materials, we can meet the requirements of the program. We also will continue to evaluate lasers, connectors, and detectors in our laboratory. It is our continuing experience that published device specifications are little more than a starting point to make an initial selection as to what devices appear most or least promising. When such parameters as modal noise production in connectors, mode-hopping in lasers, tailing in detectors (etc.) become important, as they are in wideband analog laser systems, there is no substitute for careful in-system trials of devices. As the technology advances, the important parameters need to be identified and isolated and uniform standards established. At present this has not been accomplished and appears to be a goal of immediate interest.

LITERATURE CITED

(1) J. C. Blackburn, A 120-MHz Bandwidth Linear Signal Transmission System Using Fiber Optics, IEEE Trans Instrum Meas, *IM-24*, 3 (September 1975).

(2) J. C. Blackburn and R. Martin, A Versatile Fiber-Optic Signal Link for EMP Testing and General Application, Harry Diamond Laboratories, HDL-TM-80-5 (June 1980).

(3) J. C. Blackburn, A Radiation-Hardened Fiber-Optic System Having a 400-MHz Bandwidth and Linear Response, IEEE Trans Instrum Meas, *IM-26* (March 1977), 64-70.

(4) J. C. Blackburn, A 300-MHz 1-km Long Fiber-Optic Link for Analog Signals, Harry Diamond Laboratories, HDL-TM-79-24 (December 1979).

(5) R. E. Epworth, Phenomenon of Modal Noise in Fiber Systems, IEEE Topical Meeting, Fiber-Optic Communication (March 6-8, 1979), Washington, D. C.

(6) R. E. Matick, Transmission Line Pulse Transformer-Theory and Applications, IEEE Proceedings, *56*, 1 (January 1968).

(7) J. Vanderwall, A Very Wideband Balun Circuit Featuring Matched and Isolated Inputs, Harry Diamond Laboratories /Defense Nuclear Agency, Fiber Optics Conference (March 1980).

(8) J. C. Blackburn and A. Bromborsky, Design and Construction of a Radiation Hardened Analog Fiber-Optic Data Link, IEEE Conference on Nuclear and Space Radiation Effects (July 1977).

(9) J. Vanderwall and J. C. Blackburn, Suppression of Some Artifacts of Modal Noise in Fiber-Optic Systems, Optics Letters, *4*, 9 (September 1979).

DISTRIBUTION

ADMINISTRATOR
DEFENSE TECHNICAL INFORMATION CENTER
ATTN DTIC-DDA (12 COPIES)
CAMERON STATION, BUILDING 5
ALEXANDRIA, VA 22314

COMMANDER
US ARMY RSCH & STD GP (EUR)
ATTN CHIEF, PHYSICS & MATH BRANCH
FPO NEW YORK 09510

COMMANDER
US ARMY ARMAMENT MATERIEL
READINESS COMMAND
ATTN DRSAR-LEP-L, TECHNICAL LIBRARY
ROCK ISLAND, IL 61299

COMMANDER
US ARMY MISSILE & MUNITIONS
CENTER & SCHOOL
ATTN ATSK-CTD-F
REDSTONE ARSENAL, AL 35809

COMMANDER
US ARMY MATERIEL DEVELOPMENT &
READINESS COMMAND
ATTN DRCDE, DIR FOR DEV & ENGR
ATTN DRCDE-R, SYSTEMS EVALUATION
& TESTING
ATTN DRCCE, DIR FOR COMMUNICATIONS-
ELECTRONICS
ATTN DRCBSI, DIR FOR BATTLEFIELD
SYS INTEGRATION
5001 EISENHOWER AVENUE
ALEXANDRIA, VA 22333

DIRECTOR
US ARMY MATERIEL SYSTEMS ANALYSIS
ACTIVITY
ATTN DRXSY-MP
ABERDEEN PROVING GROUND, MD 21005

DIRECTOR
US ARMY BALLISTIC RESEARCH LABORATORY
ATTN DRDAR-TSB-S (STINFO)
ATTN DRDAR-BLV, VULNERABILITY/
LETHALITY DIV
ABERDEEN PROVING GROUND, MD 21005

US ARMY ELECTRONICS TECHNOLOGY
AND DEVICES LABORATORY
ATTN DELET-DD
FORT MONMOUTH, NJ 07703

HQ, USAF/SAMI
WASHINGTON, DC 20330

TELEDYNE BROWN ENGINEERING
CUMMINGS RESEARCH PARK
ATTN DR. MELVIN L. PRICE, MS-44
HUNTSVILLE, AL 35807

COMMANDING OFFICER
NAVAL TRAINING EQUIPMENT CENTER
ATTN TECHNICAL LIBRARY
ORLANDO, FL 32813

ENGINEERING SOCIETIES LIBRARY
345 EAST 47TH STREET
ATTN ACQUISITIONS DEPARTMENT
NEW YORK, NY 10017

TEXAS INSTRUMENTS, INC.
P.O. BOX 226015
ATTN FRANK POBLENZ
DALLAS, TX 75266

RELIABILITY ANALYSIS CENTER
RADC (RBRAC)
ATTN DATA COORDINATOR/GOVT PROGRAMS
GRIFFISS AFB, NY 13441

ANALYTICAL SYSTEMNS ENGINEERING CORP
OLD CONCORD ROAD
ATTN LIBRARIAN
BURLINGTON, MA 01803

BROOKHAVEN NATIONAL LABORATORY
ASSOCIATED UNIVERSITIES, INC.
ATTN PHYSICS DEPT
UPTON, LONG ISLAND, NY 11973

AMES LABORATORY (ERDA)
ATTN NUCLEAR SCIENCE CATEGORY
IOWA STATE UNIVERSITY
AMES, IA 50011

DEPARTMENT OF COMMERCE
NATIONAL BUREAU OF STANDARDS
ATTN LIBRARY
WASHINGTON, DC 20234

DEPARTMENT OF COMMERCE
NATIONAL BUREAU OF STANDARDS
CENTER FOR RADIATION RESEARCH
WASHINGTON, DC 20234

INSTITUTE FOR TELECOM SCIENCES
NATIONAL TELECOMMUNICATIONS &
INFO ADMIN
ATTN J. HULL
BOULDER, CO 80303

DEPARTMENT OF COMMERCE
NATIONAL OCEANIC & ATMOSPHERIC
ADMINISTRATIN
ATTN ENVIRONMENTAL RESEARCH LABS
ROCKVILLE, MD 20852

DISTRIBUTION (Cont'd)

US ENERGY RESEARCH & DEVELOPMENT
ADMINISTRATION
ATTN ASST ADMIN FOR NUCLEAR ENERGY
ATTN DIV OF COMMUNICATIONS
& COMPUTER OPERATIONS
ATTN OFFICE OF TECHNICAL INFORMATION
WASHINGTON, DC 20545

DIRECTOR
DEFENSE ADVANCED RESEARCH
PROJECTS AGENCY
ATTN DIR, NUCLEAR MONITORING RES OFFICE
ATTN DIR, TECHNOLOGY ASSESSMENTS OFFICE
ATTN DR. SHERMAN KARP
ARCHITECT BLDG
1400 WILSON BLVD
ARLINGTON, VA 22209

DIRECTOR
DEFENSE COMMUNICATIONS AGENCY
ATTN TECH LIBRARY
WASHINGTON, DC 20305

DIRECTOR
DEFENSE COMMUNICATIONS AGENCY
COMMAND & CONTROL TECHNICAL CENTER
ATTN CHIEF FOR MIL COMMAND SYS
WASHINGTON, DC 20301

DIRECTOR
DEFENSE COMMUNICATIONS ENGINEERING
CENTER
ATTN RES & DEV
ATTN TRANS SYS DEV BR
ATTN TECHNICAL LIBRARY
1860 WIEHLE AVE
RESTON, VA 22090

DIRECTOR
DEFENSE INTELLIGENCE AGENCY
ATTN DT-1, NUCLEAR & APPLIED
SCIENCES DIV
ATTN DT-4, ELECTRONICS & COMMAND
& CONTROL DIV
WASHINGTON, DC 20301

CHAIRMAN
OFFICE OF THE JOINT CHIEFS OF STAFF
ATTN J-6, COMMUNICATIONS-ELECTRONICS
WASHINGTON, DC 20301

CHIEF
LIVERMORE DIVISION, FIELD COMMAND, DNA
LAWRENCE LIVERMORE LABORATORY
P.O. BOX 808
LIVERMORE, CA 94550

NATIONAL COMMUNICATIONS SYSTEM
OFFICE OF THE MANAGER
ATTN NCS-TS
WASHINGTON, DC 20305

DIRECTOR
NATIONAL SECURITY AGENCY
ATTN O. D. VAN GUNTEN, R-425
ATTN FRANK LUNNEY
ATTN PAUL SZAEPANCH
ATTN HARRY SOLOMON
ATTN S-65, P. BENSON
ATTN R-13, H. HOEHN, N. GROVE
FORT GEORGE G. MEADE, MD 20755

DIRECTOR
DEFENSE NUCLEAR AGENCY
ATTN RAEV, ELECTRONIC VULNERABILITY
ATTN TITL, LIBRARY
ATTN RAEE, EMP EFFECTS DIVISION
ATTN SPTD, TEST DIVISION
WASHINGTON, DC 20305

COMMANDER
FIELD COMMAND
DEFENSE NUCLEAR AGENCY
ATTN FCSD-A4, TECH REF BR
ATTN FCTMEI, MR. GARTICK
KIRTLAND AFB, NM 87115

UNDER SECRETARY OF DEFENSE
FOR RESEARCH & ENGINEERING
ATTN DEP DIR (TEST & EVALUATION)
ATTN ELECTRONICS & PHYSICAL SCIENCES
WASHINGTON, DC 20301

OFFICE OF THE DEPUTY CHIEF OF STAFF
FOR RESEARCH, DEVELOPMENT,
& ACQUISITION
DEPARTMENT OF THE ARMY
ATTN DAMA-ARZ-A, CHIEF SCIENTIST,
DA & DIRECTOR OF ARMY RESEARCH,
DR. M. E. LASSER
ATTN DAMA-CSS-N, NUCLEAR TEAM
ATTN DAMA-WSW, GROUND COMBAT SYS DIV
WASHINGTON, DC 20310

COMMANDER
US ARMY ARMAMENT RESEARCH AND
DEVELOPMENT COMMAND
ATTN DRCPM-CAWS, CANNON ARTILLERY
WEAPON SYS/SEMIACTIVE LASER
GUIDED PROJECTILES
ATTN DRDAR-SEM, MATERIEL DEV EVAL
ATTN DRDAR-LCN, NUCLEAR APPLICATIONS DIV
ATTN DRDAR-TS, TECHNICAL SUPPORT DIV
DOVER, NJ 07801

DISTRIBUTION (Cont'd)

COMMANDER
US ARMY AVIATION RESEARCH &
DEVELOPMENT COMMAND
P.O. BOX 209
ATTN DRDAV-E, DIR FOR DEV & ENGR
ATTN DRDAV-N, ADVANCED SYS TECHNOLOGY
INTEGRATION OFFICE
ST LOUIS, MO 63166

COMMANDER
ATMOSPHERIC SCIENCES LABORATORY
ATTN DELAS-BE-C, COMBAT ENVIR BR
WHITE SANDS MISSILE RANGE, NM 88002

BALLISTIC MISSILE DEFENSE PROGRAM
MANAGER OFFICE
ATTN DACS-BMZ-C, DEPUTY DIR
COMMONWEALTH BUILDING
1300 WILSON BLVD
ARLINGTON, VA 22209

COMMANDER
BALLISTIC MISSILE DEFENSE SYSTEM COMMAND
P.O. BOX 1500
HUNTSVILLE, AL 35807

COMMANDER
US ARMY COMM-ELEC INGR INSTAL AGENCY
ATTN TECH LIB
FORT HUACHUCA, AZ 85613

COMMANDER
US ARMY COMMUNICATIONS COMMAND
COMBAT DEVELOPMENT DIV
FORT HUACHUCA, AZ 85613

COMMANDER
US ARMY COMMUNICATIONS RESEARCH AND
DEVELOPMENT COMMAND
ATTN DRDCO-SE, SYS ENGR & INTEGRATION
ATTN DRDCO-COM, COMMUNICATIONS SCIENCES
ATTN DRCPM-ATC, PM, ARMY TACTICAL
COMMUNICATIONS SYS
ATTN DRDCO-COM RM4, J. CHRISTIAN
ATTN DRDCO-COM-RM1, L. DWORKIN
ATTN DRDCO-COM-RM1, A. MONDRICK
ATTN DRDCO-COM-RM, I. KULLBACK
ATTN DRDCO-COM, S. DIVITO
FT MONMOUTH, NJ 07703

CHIEF
US ARMY COMMUNICATIONS SYS AGENCY
FT MONMOUTH, NJ 07703

COMMANDER
US ARMY COMMUNICATIONS & ELECTRONICS
MATERIEL READINESS COMMAND
ATTN SELEM-ES, DIR FOR ELECTRONICS
SYS MAINTENANCE
FT MONMOUTH, NJ 07703

COMMANDER
US ARMY COMMUNICATIONS COMMAND AGENCY
USA COMMO AGENCY, WS
WHITE SANDS MISSILE RANGE, NM 88002

COMMANDER
US ARMY COMPUTER SYSTEMS COMMAND
ATTN TECH LIB
FORT BELVOIR, VA 22060

US ARMY OFFICE TEST DIR
JOINT SERVICES
ELECTRO-OPTICAL GUIDED WEAPONS
COUNTERMEASURES TEST PROGRAM
WHITE SANDS MISSILE RANGE, NM 88002

COMMANDER
ERADCOM TECHNICAL SUPPORT ACTIVITY
ATTN DELSD-L, TECH LIB
FORT MONMOUTH, NJ 07703

DIRECTOR
ELECTRONIC WARFARE LABORATORY
ATTN DELEW-C, COMM INTEL/CM DIV
FT MONMOUTH, NJ 07703

COMMANDER
US ARMY ELECTRONICS COMMAND
OFFICE OF MISSILE ELECTRONIC WARFARE
WHITE SANDS MISSILE RANGE, NM 88002

COMMANDER
FORT HUACHUCA
DEPT OF THE ARMY
FORT HUACHUCA, AZ 85613

COMMANDER
EWL
ATTN DELEW-I
INTEL MAT DEV & SPT OFFICE
FT MEADE, MD 20755

COMMANDER
US ARMY MATERIALS & MECHANICS
RESEARCH CENTER
ATTN DRXMR-PL, TECHNICAL LIBRARY
WATERTOWN, MA 02172

COMMANDER
US DARCOM FIELD OFFICE
P.O. BOX 5290
KIRTLAND AFB, NM 87117

DIRECTOR OF MATERIEL MANAGEMENT
US ARMY COMMUNICATIONS & ELECTRONICS
MATERIEL READINESS COMMAND
ATTN DRSEL-MME, ELECTRONICS DIV
FORT MONMOUTH, NJ 07703

DISTRIBUTION (Cont'd)

PROJECT MANAGER, FIREFINDER
DRCPM-FF
FT MONMOUTH, NJ 07703

PROJECT MANAGER, LANCE
DRCPM-LC
REDSTONE ARSENAL, AL 35809

PROJECT MANAGER
PATRIOT MISSILE SYSTEM, USADARCOM
DRCPM-MD-T-E
REDSTONE ARSENAL, AL 35809

PROJECT OFFICER
US ARMY ELECTRONICS RES & DEV COMM
FORT MONMOUTH, NJ 07703

COMMANDER
US ARMY MISSILE COMMAND
ATTN DRCPM-DT, TOW-DRAGON PROJ OFFICE
ATTN DRDMI-TB, REDSTONE SCIENTIFIC INFO CENTER
ATTN DRDMI-E, ENGINEERING LABORATORY
ATTN DRDMI-ET, TEST & EVALUATION DIR
REDSTONE ARSENAL, AL 35809

DIRECTOR
NIGHT VISION & ELECTRO-OPTICS LABORATORY
ATTN DELNV-EO, E-O DEVICES DIV
FORT BELVOIR, VA 22060

COMMANDER
US ARMY NUCLEAR & CHEMICAL AGENCY
ATTN ATCN-W, WEAPONS EFFECTS DIV
7500 BACKLICK RD
BUILDING 2073
SPRINGFIELD, VA 22150

COMMANDER
US ARMY OPERATIONAL TEST
AND EVALUATION AGENCY
ATTN CSTE-ZS, SCI ADVISOR
ATTN CSTE-TM-EWI, ELECTRONIC
WAREFARE & INTELLIGENCE SYS
ATTN CSTE-FTD, FIELD TEST DIV
5600 COLUMBIA PIKE
FALLS CHURCH, VA 22041

DIRECTOR
US ARMY RESEARCH & TECHNOLOGY LABS
AMES REARCH CENTER
MOFFETT FIELD, CA 94035

ARMY RESEARCH OFFICE (DRHAM)
ATTN TECH LIBRARY
P.O. BOX 12211
RESEARCH TRIANGLE PARK, NC 27709

DIRECTOR
US ARMY SIGNALS WARFARE LABORATORY
ATTN DELSW-TE, TEST & EVAL OFFICE
ATTN DELSW-CE, COMM/EW DIV
VINT HILL FARMS STATION
WARRENTON, VA 22186

COMMANDER
US ARMY TANK-AUTOMOTIVE RES
& DEV COMMAND
DEPT OF THE ARMY
ATTN DRDTA-T, DIR FOR ENGR SUPPORT
WARREN, MI 48090

COMMANDER
HQ, US ARMY TEST & EVALUATION COMMAND
ATTN DRSTE-AD-M, METHODOLOGY
IMPROVEMENT DIV
ABERDEEN PROVING GROUND, MD 21005

COMMANDER
WHITE SAND MISSILE RANGE
DEPT OF THE ARMY
ATTN STEWS-CE, COMMUNICATIONS/
ELEC OFFICE
ATTN STEWS-NR, NATIONAL RANGE
OPERATIONS DIR
ATTN STEWS-ID, INSTRUMENTATION DIR
ATTN STEWS-ID-E, ELECTRONICS DIV
WHITE SAND MISSILE RANGE, NM 88002

COMMANDER
US ARMY ABERDEEN PROVING GROUND
ATTN STEAP-MTM, METHODOLOGY & INST
ABERDEEN PROVING GROUND, MD 21005

COMMANDER
US ARMY ELECTRONICS PROVING GROUND
ATTN STEEP-MT-I, METHOD & INSTR BR
ATTN STEEP-MT-T, TECH TEST SUPPORT
ATTN STEEP-PA-I, TECH INFO CENTER
FORT HUACHUCA, AZ 85613

COMMANDER
US ARMY YUMA PROVING GROUND
ATTN STEYP-MTE, TEST ENGINEERING DIV
YUMA, AZ 85364

COMMANDER
US ARMY ENGINEER SCHOOL
ATTN TECH LIB
FORT BELVOIR, VA 22060

COMMANDANT
US ARMY SIGNAL CENTER & FORT GORDON
ATTN TECH LIB
FORT GORDON, GA 30905

DISTRIBUTION (Cont'd)

ASSISTANT SECRETARY OF THE NAVY
REEARCH, ENGINEERING, & SYSTEMS
DEPT OF THE NAVY
WASHINGTON, DC 20305

CHIEF OF NAVAL MATERIAL
DEPT OF THE NAVY
ATTN NSP-205, ASST FOR FBM
WPN SYS, OPS & EVAL
WASHINGTON, DC 20360

CHIEF OF NAVAL OPERATIONS
DEPT OF THE NAVY
ATTN DIR, COM & CONTR &
COMMUNICATIONS PROGRAMS
WASHINGTON, DC 20350

CHIEF OF NAVAL RESEARCH
DEPT OF THE NAVY
ATTN TECHNICAL LIBRARY
ARLINGTON, VA 22217

COMMANDER
NAVAL AIR SYSTEMS COMMAND HQ
DEPT OF THE NAVY
ATTN ASST CMDR FOR RES & TECH
ATTN ASST CMDR FOR TEST & EVAL
WASHINGTON, DC 20361

COMMANDER
NAVAL OCEAN SYSTEMS CENTER
ATTN RESEARCH & TECH OFFICE
SAN DIEGO, CA 92152

COMMANDER
NAVAL ORDNANCE STATION
INDIANHEAD, MD 20640

SUPERINTENDANT
NAVAL POSTGRADUATE SCHOOL
ATTN LIBRARY, CODE 2124
MONTEREY, CA 93940

DIRECTOR
NAVAL RESEARCH LABORATORY
ATTN 5000, ELECTRONIC SCI & TECH DIR
ATTN 5200, ELECTRONICS TECH DIV
ATTN 5500, OPTICAL SCI DIV
WASHINGTON, DC 20375

COMMANDER
NAVAL SEA SYSTEMS COMMAND HQ
DEPT OF THE NAVY
ATTN NSEA-09G32, TECH LIB
ATTN NSEA-03, RES & TECHNOLOGY DIR
WASHINGTON, DC 20362

COMMANDER
NAVAL SHIP R&D CENTER
ATTN INSTRUMENTATION DEV
BETHESDA, MD 20034

COMMANDER
NAVAL SURFACE WEAPONS CENTER
ATTN DF, ELECTRONICS SYS DEPT
ATTN DF-14, APPLIED ELECTRONIC BR
ATTN DG-30, APPLIED SCIENCE
& MATERIALS DIV
ATTN DX-21, LIBRARY DIV
DAHLGREN, VA 22448

COMMANDER
NAVAL SURFACE WEAPONS CENTER
ATTN WA-31, SENSOR ELECTRONICS BR
ATTN WA-50, NUCLEAR WEAPONS EFFECTS DIV
ATTN WR, RESEARCH & TECHNOLOGY DEPT
ATTN WR-42, ELECTRO-OPTICS BR
WHITE OAK, MD 20910

COMMANDER
NAVAL TELECOMMUNICATIONS COMMAND HQ
ATTN TECHNICAL LIBRARY
4401 MASS AVE NW
WASHINGTON, DC 20390

COMMANDER
NAVAL UNDERWATER SYSTEMS CENTER
ATTN WEAPON SYS DEPT
NEW LONDON, CT 06320

COMMANDER
NAVAL WEAPONS CENTER
ATTN 315, LASER/INFRARED SYS DIV
ATTN 394, ELECRO-OPTICS DIV
ATTN 06, TEST & EVALUATION DIV
CHINA LAKE, CA 93555

COMMANDER
NAVAL WEAPONS EVALUATION FACILITY
KIRTLAND AIR FORCE BASE
ATTN TECH LIBRARY
ALBUQUERQUE, NM 87117

COMMANDER
HQ AERONAUTICAL SYSTEMS DIV (AFSC)
WRIGHT-PATTERSON AFB, OH 45433

COMMANDER
ARNOLD ENGINEERING DEVELOPMENT CENTER
ATTN DY, DIR TECHNOLOGY
ATTN DYR, R&D DIV
ATTN XO, DIR TEST
ARNOLD AIR FORCE STATION, TN 37389

DIRECTOR
AF AVIONICS LABORATORY
ATTN KJ (TE), ELECTRONIC TECH DIV
ATTN KJA (TEO), ELECTRO-OPTICS
TECHNOLOGY BR
WRIGHT-PATTERSON AFB, OH 45433

DISTRIBUTION (Cont'd)

COMMANDER
AF ELECTRONIC SYSTEMS DIVISION
ATTN WO, DEP FOR CONTROL
& COMMUNICATIONS SYS
L. G. HANSCOM AFB, MA 01730

COMMANDER
HQ FOREIGN TECHNOLOGY DIVISION (AFSC)
ATTN YEG (ETW), ELECTRONIC WARFARE DIV
WRIGHT-PATTERSON AFB, OH 45433

COMMANDER
SPACE & MISSILE SYSTEMS ORGANIZATION
(SAMSO)
P.O. BOX 92960
WORLDWAY POSTAL CENTER
ATTN XR, DEP FOR DEV PLANS
LOS ANGELES, CA 90009

COMMANDER
HQ AIR FORCE SYSTEMS COMMAND
ATTN DL, DIR, SCI & TECHNOLOGY
ATTN TECHNICAL LIBRARY
ANDREWS AFB
WASHINGTON, DC 02334

COMMANDER
HQ AF TEST & EVALUATION CENTER
ATTN TEK, ELECTRONICS DIV
KIRTLAND AFB, NM 87115

COMMANDER
AFWL/DYC
ATTN EL, ELECTRONICS DIV
ATTN COL GERALD P. CHAPMAN
KIRTLAND AFB, NM 87117

AMES RESEARCH CENTER
NASA
ATTN TECHNICAL INFO DIV
MOFFETT FIELD, CA 94035

DIRECTOR
NASA
GODDARD SPACE FLIGHT CENTER
ATTN 250, TECH INFO DIV
GREENBELT, MD 20771

JET PROPULSION LABORATORY
CALIFORNIA INSTITUTE OF TECHNOLOGY
ATTN TECHNICAL LIBRARY
4800 OAK GROVE DRIVE
PASADENA, CA 91103

DIRECTOR
NASA
LANGLEY RESEARCH CENTER
ATTN TECHNICAL LIBRARY
HAMPTON, VA 23665

DIRECTOR
NASA
LEWIS RESEARCH CENTER
ATTN TECHNICAL LIBRARY
CLEVELAND, OH 44135

G. E. SPACE DIVISION
P.O. BOX 8555
ATTN DANTE TASCA
ROOM 2432, BLDG 100
PHILADELPHIA, PA 19101

DEUTSCH ELECTRONIC COMPONENTS
ATTN HARRY SPRY
MUNICIPAL AIRPORT
BANNING, CA 92220

CATHOLIC UNIVERSITY OF AMERICA
CARDINAL STATION
P.O. BOX 232
ATTN J. CLARK
WASHINGTON, DC 20017

TRW DEFENSE & SPACE SYSTEMS GROUP
ONE SPACE PARK
ATTN 82/2389, G. ARMSTRONG, R. EASTMAN
ATTN M2/2384, J. TAMBE
ATTN M1/1338
ATTN M1/1334, P. GOLDSMITH
ATTN M2/2145, S. KIMBLE
REDONDO BEACH, CA 90278

HUGHES RESEARCH LABS
DIV OF HUGHES AIRCRAFT COMPANY
ATTN R. BLAIR
MALIBU CANYON ROAD
MALIBU, CA 90265

EFFECTS TECHNOLOGY INC
ATTN W. NEAUMAN
ATTN R. WENGLER
ATTN E. BICK
5383 HOLLISTER AVE
SANTA BARBARA, CA 93111

EG&G, INC
ATTN R. LYNN
ATTN M. NELSON
ATTN T. DAVIES
120 ROBIN HILL ROAD
GOLETA, CA 9317

GENERAL DYNAMICS CORPORATION
ATTN K. WILSON
P.O. BOX 80986
SAN DIEGO, CA 92138

DISTRIBUTION (Cont'd)

GALILEO ELECTRO-OPTICS CORPORATION
ATTN R. JAEGER
ATTN L. OWEN
GALILEO PARK
STURBRIDGE, MA 01518

ITT ELECTRO-OPTICAL PRODUCTS DIVISION
ATTN M. MAKLAD
ATTN L. HUYBRECHTS
ATTN A. ASAM
ATTN G. WILHELMI
7635 PLANTATION ROAD
ROANOKE, VA 24019

PHYSICS INTERNATIONAL COMPANY
ATTN F. SAUER
ATTN C. GODFREY
ATTN R. GENUARIO
2700 MERCED STREET
SAN LEANDRO, CA 94577

LOCKHEED MISSILES AND SPACE
COMPANY, INC
ATTN H. POLISKY
WWPC BOX 92915
LOS ANGELES, CA 90009

ROCKWELL INTERNATIONAL CORPORATION
ATTN G. MESSENGER
ATTN D. STILL
P.O. BOX 3105
ANAHEIM, CA 92803

SCIENCE APPLICATIONS, INC
ATTN K. SITES
P.O. BOX 19057
LAS VEGAS, NV 89119

SCIENCE APLICATIONS, INC
ATTN P. MILLER
1257 TASMAN DRIVE
SUNNYVALE, CA 94086

SPECTRONICS
ATTN L. STEWART
ATTN MR. SHAUNFIELD
830 EAST ARAPAHO
RICHARDSON, TX 75081

SRI INTERNATIONAL
ATTN D. KEOUGH
ATTN G. ABRAHAMSON
333 RAVENSWOOD AVENUE
MENLO PARK, CA 94025

TIMES WIRE AND CABLE
ATTN W. PRIMROSE
358 HALL AVE
WALLINGFORD, CT 06492

US ARMY ELECTRONICS RESEARCH
& DEVELOPMENT COMMAND
ATTN TECHNICAL DIRECTOR, DRDEL-CT

HARRY DIAMOND LABORATORIES
ATTN CO/TD/TSO/DIVISION DIRECTORS
ATTN RECORD COPY 81200
ATTN HDL LIBRARY (3 COPIES), 81100
ATTN HDL LIBRARY, (WOODBRIDGE), 81100
ATTN TECHNICAL REPORTS BRANCH, 81300
ATTN CHAIRMAN, EDITORIAL COMMITTEE
ATTN LEGAL OFFICE, 97000
ATTN CHIEF, 21000
ATTN CHIEF, 21100
ATTN CHIEF, 21200
ATTN CHIEF, 21300
ATTN CHIEF, 21400 (5 COPIES)
ATTN CHIEF, 21500 (3 COPIES)
ATTN CHIEF, 20000
ATTN CHIEF, 22100
ATTN CHIEF, 22300
ATTN CHIEF, 22800
ATTN CHIEF, 22900
ATTN CHIEF, 20240
ATTN DICKINSON, P., BETA-PD
ATTN MILETTA, J., 21100
ATTN LANHAM, C., 00210 (2 COPIES)
ATTN SHARE, S., 22800
ATTN BIXBY, R., 22900
ATTN HUTTLIN, G. A., 22900
ATTN WHITTAKER, D., 22900
ATTN LAMB, R. C., 22900
ATTN OLDHAM, T. R., 2300
ATTN KEHS, A., 22300
ATTN KERRIS, K., 22900
ATTN BLACKBURN, J., 22300 (30 COPIES)

DATE
FILME
0-8