LEVEL II

ESD-TR-81-129

M81-7

(10)

DATA TRANSFER MINIMIZATION FOR COHERENT PASSIVE LOCATION SYSTEMS

DUANE J. MATTHIESEN

JUNE 1981

Prepared for

DEPUTY FOR AWACS
ELECTRONIC SYSTEMS DIVISION
AIR FORCE SYSTEMS COMMAND
UNITED STATES AIR FORCE
Hanscom Air Force Base, Massachusetts

AD A104087

DTIC ELECTE SEP 11 1981 S D H

DTIC FILE COPY

Approved for public release; distribution unlimited.

Project No. 4110
Prepared by
THE MITRE CORPORATION
Bedford, Massachusetts
Contract No. F19628-81-C-0001

BEST AVAILABLE COPY

81 9 11 051

When U.S. Government drawings, specifications, or other data are used for any purpose other than a definitely related government procurement operation, the government thereby incurs no responsibility nor any obligation whatsoever; and the fact that the government may have formulated, furnished, or in any way supplied the said drawings, specifications, or other data is not to be regarded by implication or otherwise, as in any manner licensing the holder or any other person or corporation, or conveying any rights or permission to manufacture, use, or sell any patented invention that may in any way be related thereto.

Do not return this copy. Retain or destroy.

REVIEW AND APPROVALS

This Technical Report has been reviewed and is approved for publication.

MICHAEL D. WEINSTOCK, Capt, USAF
Mission Avionics Division

CLEMENT V. HORRIGAN
Deputy Director of Engineering
Deputy for AWACS

UNCLASSIFIED

SECURITY CLASSIFICATION OF THIS PAGE (When Data Entered)

REPORT DOCUMENTATION PAGE

READ INSTRUCTIONS BEFORE COMPLETING FORM

1. REPORT NUMBER: ESD-TR-81-129

2. GOVT ACCESSION NO.: AD-A104 087

3. RECIPIENT'S CATALOG NUMBER

4. TITLE (and Subtitle): DATA TRANSFER MINIMIZATION FOR COHERENT PASSIVE LOCATION SYSTEMS

5. TYPE OF REPORT & PERIOD COVERED: Technical Rept.

6. PERFORMING ORG. REPORT NUMBER: M81-7

7. AUTHOR(S): Duane J. Matthiesen G.D. Miller

8. CONTRACT OR GRANT NUMBER(S): F19628-81-C-0001

9. PERFORMING ORGANIZATION NAME AND ADDRESS:
The MITRE Corporation
P.O. Box 208
Bedford, MA 01730

10. PROGRAM ELEMENT, PROJECT, TASK AREA & WORK UNIT NUMBERS: Project No. 4110

11. CONTROLLING OFFICE NAME AND ADDRESS:
Deputy for AWACS
Electronic Systems Division, AFSC
Hanscom AFB, MA 01731

12. REPORT DATE: JUNE 1981

13. NUMBER OF PAGES: 41

14. MONITORING AGENCY NAME & ADDRESS (if different from Controlling Office): 45

15. SECURITY CLASS. (of this report): UNCLASSIFIED

15a. DECLASSIFICATION DOWNGRADING SCHEDULE

16. DISTRIBUTION STATEMENT (of this Report)

Approved for public release; distribution unlimited.

17. DISTRIBUTION STATEMENT (of the abstract entered in Block 20, if different from Report)

18. SUPPLEMENTARY NOTES

19. KEY WORDS (Continue on reverse side if necessary and identify by block number)

CORRELATION	DOPPLER PROCESSING	HYPOTHESIS TESTING
CROSS-CORRELATION	ENCODING	I & Q DATA
DATA TRANSFER	ESTIMATION	INFORMATION THEORY
DETECTION	GUASSIAN SIGNALS	OPTIMAL

(over)

20. ABSTRACT (Continue on reverse side if necessary and identify by block number)

Coherent passive location systems derive their optimal detection and location estimation capabilities by cross-correlating signal segments observed at physically separate receivers. They are inherently robust. Performance characteristics and system requirements including observation intervals, data transfer, doppler compensation, and adaptive thresholding are presented for the fundamental two-receiver case. For many potential systems, particularly those that must operate from mobile platforms, techniques that minimize data transfer requirements while maintaining reliable system performance

(over)

DD FORM 1 JAN 73 1473

UNCLASSIFIED

SECURITY CLASSIFICATION OF THIS PAGE (When Data Entered)

235 050

19. KEY WORDS (continued)

PHASE DATA
PASSIVE LOCATION
PASSIVE SURVEILLANCE
QUANTIZATION
RATE DISTORTION THEORY
SIGNAL PROCESSING
TIME-DELAY
TIME-OF-ARRIVAL (TOA)

20. ABSTRACT (continued)

must be carefully considered during system design. Performance losses of several candidate data transfer reduction techniques of varying complexity are compared with minimal bounds obtained from rate distortion theory.

ACKNOWLEDGMENTS

The author is indebted to A. H. Corneliussen and W. L. Wallace of The MITRE Corporation who contributed many helpful suggestions and discussed many aspects of the work. Writer-Editor G. D. Miller provided assistance with production of the final version of this paper. This report has been prepared by The MITRE Corporation under Project 4110. The contract is sponsored by the Electronic Systems Division, Air Force Systems Command, Hanscom Air Force Base, Massachusetts.

Accession For
NTIS GRA&I
DTIC TAB
Unannounced
Justification
By
Distribution/
Availability Codes
Avail and/or
Dist Special
A

TABLE OF CONTENTS

	Page
LIST OF ILLUSTRATIONS	4
INTRODUCTION	5
OPTIMAL WHITE, GAUSSIAN SYSTEM	9
GENERAL OPTIMALITY	15
DOPPLER COMPENSATION	19
DATA TRANSFER REDUCTION BOUNDS	25
CANDIDATE DATA TRANSFER REDUCTION TECHNIQUES	31
CONCLUSIONS	35
APPENDIX	37
REFERENCES	41

PRECEDING PAGE BLANK

LIST OF ILLUSTRATIONS

Figure		Page
1	Time-Delayed Signals Observed in the Presence of Noise at Two Locations	6
2	Receiver Model	13
3	Optimal Detection and Time-Delay Estimation System: White, Gaussian Statistics	14
4	Collocated Processing System	17
5	Remote Processing System	18
6	Doppler Decorrelation Loss Bound	22
7	Doppler Compensation Processing	24
8	One-Channel Data Transfer Reduction System	26
9	Rate Distortion Theory Model	27
10	Cross-Correlation Signal-to-Noise Ratio Loss Compared to Bound	30
11	Phase Quantization Sectors, 2-Bit Case	33

INTRODUCTION

For the fundamental two-receiver passive location system illustrated in figure 1, the available time-delayed signals are observed in the presence of receiver noise and/or interference. By temporarily neglecting possible doppler effects, the received signals can be expressed in the simple, general form

$$r_1(t) = s(t) + n_1(t) \qquad 0 \le t \le T_1 \tag{1}$$

$$r_2(t) = \lambda s(t - \tau) + n_2(t) \qquad \tau_o \le t \le T_2 + \tau_o \tag{2}$$

where $s(t)$ is an unknown signal, λ is an unknown relative amplitude, $\tau = (R_2 - R_1)/c$ is an unknown relative time-delay, and the $n_i(t)$ are independent noise and/or interference present at each physically separate, time-synchronous receiver. The complicating effects of signal doppler, which may or may not be present, are reviewed in a later section.

This paper considers the case of bandpass signals with one-sided spectral bandwidths of W Hertz centered about the angular carrier frequency ω_o radians/sec. (Similar results can be obtained for lowpass signals.) Consequently, the observed signals can alternatively be expressed in terms of their complex (phasor) amplitude as

$$\bar{r}_1(t) = \bar{s}(t) + \bar{n}_1(t) = I_1(t) + jQ_1(t) \qquad 0 \le t \le T_1 \tag{3}$$

IA-57,120

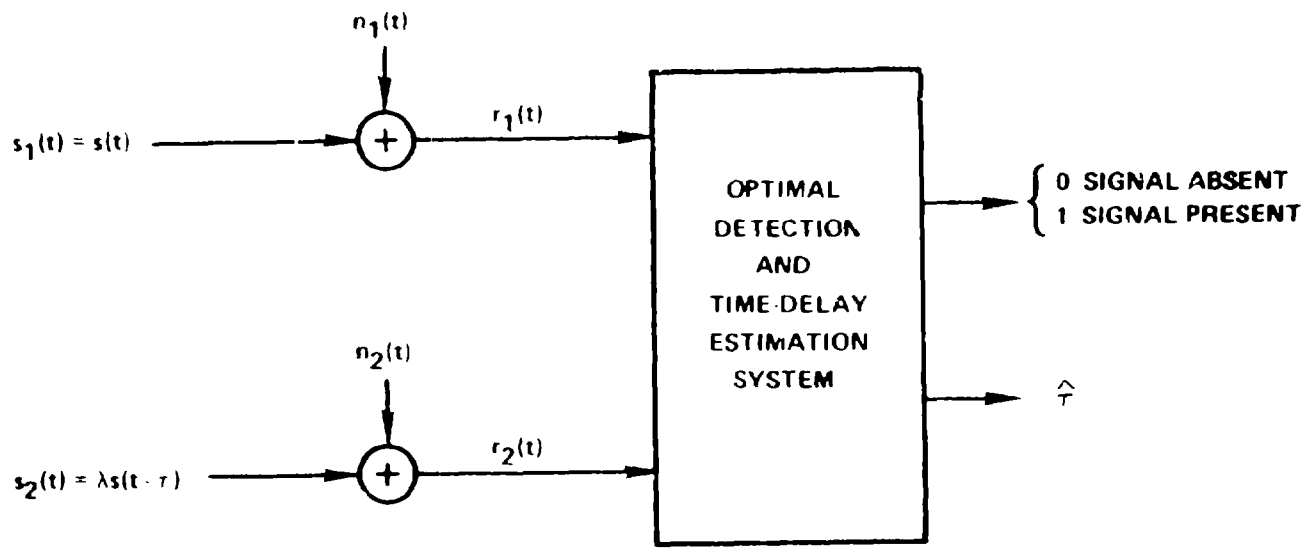

HYPOTHESIS 0: ONLY NOISE IS RECEIVED AT EACH RECEIVER, $s(t) = 0$

HYPOTHESIS 1: UNCORRELATED SIGNAL AND NOISE ARE RECEIVED AT EACH RECEIVER, $\tau - \tau_0 < -T_1$ or $\tau - \tau_0 > T_2$

HYPOTHESIS 2: CORRELATED SIGNAL AND NOISE ARE RECEIVER AT EACH RECEIVER, $-T_1 \leq \tau - \tau_0 \leq T_2$

Figure 1. Time-Delayed Signals Observed in the Presence of Noise at Two Locations

$$\bar{r}_2(t) = \lambda \bar{s}(t - \tau)\, e^{j\phi} + \bar{n}_2(t) = I_2(t) + jQ_2(t) \qquad \tau_o \le t \le T_2 + \tau_o \tag{4}$$

where the overbars denote complex variables; $e^{j\phi} = e^{-j\omega_o \tau}$ is an unknown, ambiguous relative phase distributed uniformly over $[0, 2\pi]$ radians; and the $I_i(t)$ and $Q_i(t)$ are the complex quadrature components observed at each receiver.

Since digital methods of transferring and processing the received signals are of interest, discrete-time samples of the form

$$\bar{r}_{1,i} = \bar{r}_1(i\Delta t) = \bar{s}_i + \bar{n}_{1,i} = I_{1,i} + jQ_{1,i} \qquad i = 1, 2, \ldots, N_1 \tag{5}$$

$$\bar{r}_{2,p} = \bar{r}_2\left(p\Delta t + \tau_o\right) = \lambda \bar{s}_{p+m}\, e^{j\phi} + \bar{n}_{2,p} = I_{2,p} + jQ_{2,p} \qquad p = 1, 2, \ldots, N_2 \tag{6}$$

where $T_1 = N_1 \Delta t$ and $T_2 = N_2 \Delta t$ are assumed. As long as $\Delta t \le 1/W$, the sampling theorem for time-limited, bandpass signals [1] indicates that all the information observed at the receivers can be specified by the complex sample sequences

$$\left\{\bar{r}_{1,i}\right\}_{i=1}^{N_1} = \underline{\bar{r}}_1 \qquad \text{and} \qquad \left\{\bar{r}_{2,p}\right\}_{p=1}^{N_2} = \underline{\bar{r}}_2$$

where the underbars denote vector variables. As a simplifying assumption, it is assumed in equation 6 that the unknown offset lead (negative lag) index

$$m = (\tau_o - \tau)/\Delta t = -(\tau - \tau_o)/\Delta t \tag{7}$$

is an integer. This assumption keeps the analysis simple and general and can be properly accounted for by a statistical processing loss after a specific receiver bandpass characteristic and a specific sampling interval, Δt, have been chosen. For Nyquist sampling rates, $\Delta t = 1/W$, this loss will be on the order of 1 dB [2]. If desired the loss can be reduced as low as desired by oversampling or can be eliminated by interpolative processing since the two complex sample sequences specify all the observed information.

OPTIMAL WHITE, GAUSSIAN SYSTEM

If the signal and noises are stationary, white, zero-mean, Gaussian stochastic processes, the optimal likelihood ratio statistic to detect the presence of a correlated signal (hypothesis 2; $-T_1 \le \tau - \tau_o \le T_2$) versus the absence of a signal (hypothesis 0; $s(t) = 0$) or the presence of an uncorrelated signal (hypothesis 1; $\tau - \tau_o < -T_1$ or $\tau - \tau_o > T_2$) is [3] the magnitude (envelope) of the normalized sample cross-correlation function between the two separately observed complex sequences, $|\bar{R}_{\bar{r}_1\bar{r}_2}(m)|$. The normalized sample cross-correlation function for a candidate lag, k, is

$$\bar{R}_{\bar{r}_1\bar{r}_2}(k) = \begin{cases} \dfrac{1}{N(k)} \displaystyle\sum_{i=k+1}^{N(k)+k} \bar{r}_{1,i}\,\bar{r}^{*}_{2,i-k} & 0 \le k \le \left(N_1 - 1\right) \\ \\ \dfrac{1}{N(k)} \displaystyle\sum_{i=1}^{N(k)} \bar{r}_{1,i}\,\bar{r}^{*}_{2,i-k} & -\left(N_2 - 1\right) \le k \le 0 \end{cases} \tag{8}$$

where

$$N(k) = \begin{cases} \min\left(N_2, N_1 - k\right) & 0 \le k \le \left(N_1 - 1\right) \\ \\ \min\left(N_1, N_2 - |k|\right) & -\left(N_2 - 1\right) \le k \le 0 \end{cases} \tag{9}$$

is the number of overlapping complex samples in the sequences for a lag of k and the asterisk denotes complex conjugation. Note that the maximum value of $N(k)$ is min (N_1, N_2) and is maintained over an interval of length $(|N_1 - N_2| + 1)\Delta t$. The optimal two-receiver statistic,

$$\bar{R}_{\bar{r}_1 \bar{r}_2}(k) \equiv \bar{R}(k) \quad ,$$

can test for the presence of signals with time-delays in the interval $[-T_1 \leq \tau - \tau_o \leq T_2]$ and is strictly optimal only when $N(k)$, the number of independent complex terms in the cross-correlation sum, is large in the law of large numbers sense. Not only does the cross-correlation statistic lose its condition of optimality near the interval's edges, but its performance degrades unacceptably since the cross-correlator output signal-to-noise ratio, Γ, for each candidate lag of k is [3]

$$\Gamma(k) \equiv \frac{E\left[\,|\bar{R}(k)|^2/H_2\right]}{E\left[\,|\bar{R}(k)|^2/H_1\right]} - 1 = T(k)\, W\left(\frac{\Gamma_1}{1+\Gamma_1}\right)\left(\frac{\Gamma_2}{1+\Gamma_2}\right) \tag{10}$$

where $T(k) = N(k)\,\Delta t$ is the overlap time for the lag of k and

$$\Gamma_1 \equiv \frac{E\left[s^2(t)\right]}{E\left[n_1^2(t)\right]} = \frac{E\left[\,|\bar{s}(t)|^2\right]}{E\left[\,|\bar{n}_1(t)|^2\right]} \tag{11}$$

and

$$\Gamma_2 = \frac{E\left[\{\lambda s(t-\tau)\}^2\right]}{E\left[n_2^2(t)\right]} = \frac{E\left[|\lambda \bar{s}(t-\tau)|^2\right]}{E\left[|\bar{n}_2(t)|^2\right]} \tag{12}$$

are the input signal-to-noise ratios at receiver 1 and receiver 2. The probability of detection and the probability of false alarm are interrelated as [3]

$$P_d(k) = Q\left\{\sqrt{2\Gamma(k)}\,,\ \sqrt{-2\ln\left[P_{fa}(k)\right]}\right\} \tag{13}$$

where $Q(\alpha,\beta)$ is Marcum's Q Function [4].

When the presence of a time-delayed signal is indicated, the maximum likelihood estimate of the time-delay corresponds to the lag, k, at which the interpolated magnitude of the normalized sample cross-correlation function is maximum and is obtained from [3]

$$\hat{\tau} = \tau_o - \hat{m}\Delta t \quad . \tag{14}$$

When the output signal-to-noise ratio is large, the time-delay estimation error is asymptotically unbiased, Gaussian, and efficient with a variance of [3]

$$\sigma^2_{\hat{\tau}} = \frac{1}{\Gamma(m)\beta^2} \tag{15}$$

where β is the rms bandwidth of the receivers (about the carrier) in radians/second.

Figures 2 and 3 illustrate the optimal two-receiver coherent passive location system as developed above. Because of the unknown signal and noise/interference levels, an adaptive threshold, T_o, must be generated for each candidate lag k as illustrated in figure 3. Note that, as shown by equations 10, 13, and 15, the detection and time-delay estimation performance of the optimal system at each possible lag, k, is completely characterized by the output signal-to-noise ratio, $\Gamma(k)$, which increases linearly with the overlap time-bandwidth product. Equation 10 indicates that the output signal-to-noise ratio observed at the cross-correlator will always be less than the overlap time-bandwidth product.

IA - 57,052

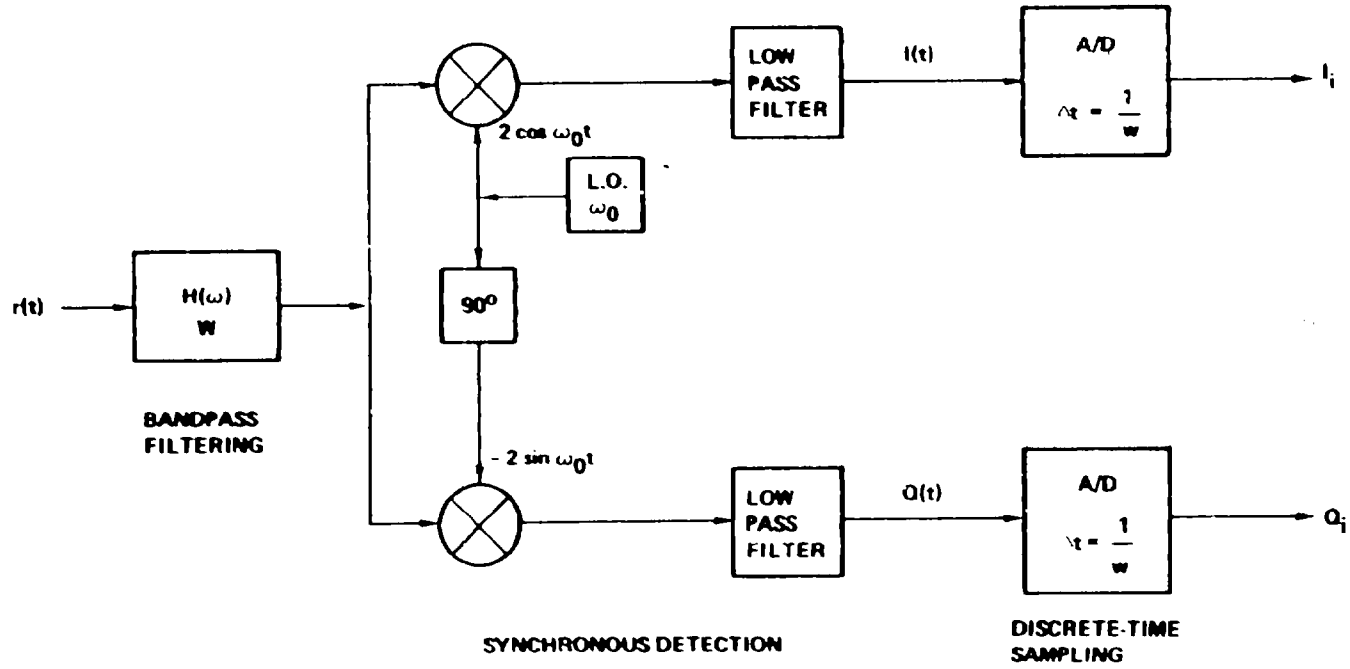

Figure 2. Receiver Model

IA-57,053

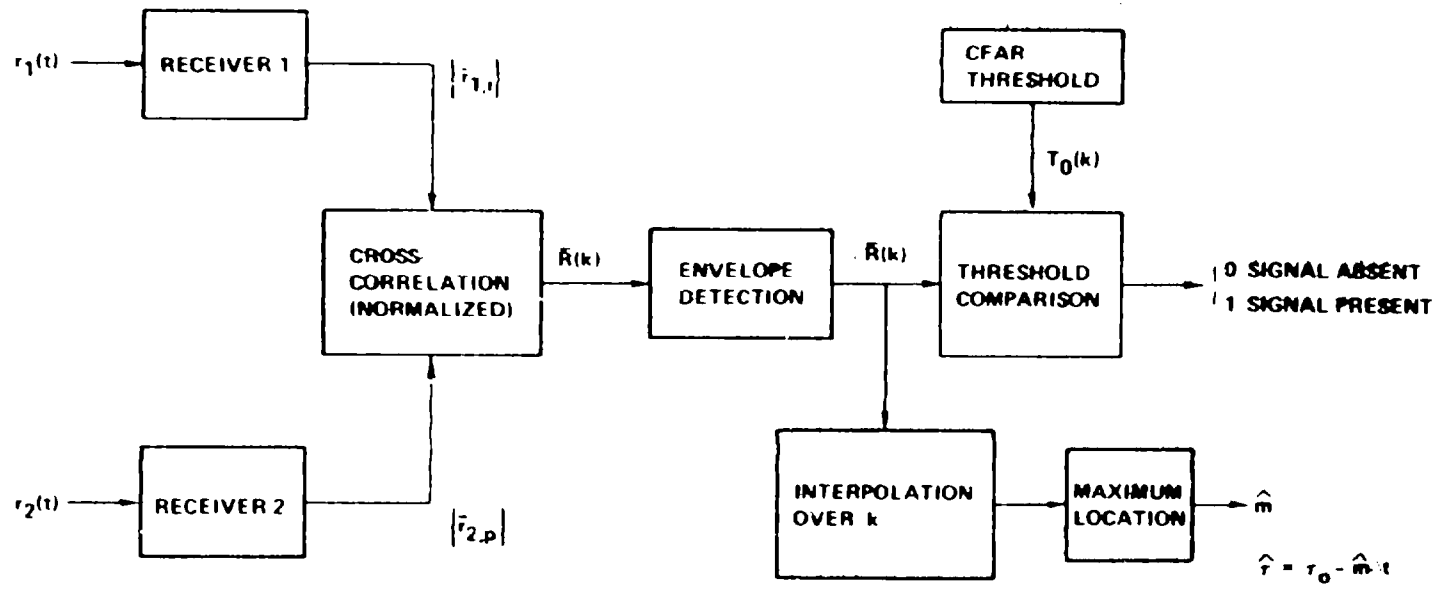

Figure 3. Optimal Detection and Time-Delay Estimation System: White, Gaussian Statistics

GENERAL OPTIMALITY

If the signal and/or noise statistics are non-Gaussian but stationary and $N(k)$ is large, the normalized sample cross-correlation function, $\bar{R}(k)$, will remain optimal in a least mean square sense and will attain the performance of the optimal Gaussian case. If, in addition, the signal and/or noise statistics are not stationary (e.g., pulsed or otherwise deterministically amplitude or phase modulated), the normalized sample cross-correlation function will still remain optimal in a least mean square sense and will still attain the performance of the optimal Gaussian, stationary case if the overlap time, $T(k) = N(k)\Delta t$, is sufficiently long so the mean square sample statistics of the signal and noises,

$$\frac{1}{N(k)} \sum_{i=1}^{N(k)} |\bar{s}_i|^2$$

$$\frac{1}{N(k)} \sum_{i=1}^{N(k)} |\bar{n}_{1,i}|^2$$

and

$$\frac{1}{N(k)} \sum_{i=1}^{N(k)} |\bar{n}_{2,i}|^2 ,$$

are essentially stationary (independent of the interval length; i. e., constant) and the sample cross-correlations between the signal and noises are essentially zero.

The previous discussion indicates that a coherent passive location system that cross-correlates signal segments observed at physically separate receivers is inherently robust (e. g., will perform well against either pulsed or continuous signals which may be either random or deterministic) and makes optimal use of the available information as long as the observation intervals and cross-correlation intervals are statistically long. To obtain this optimal performance and versatility, the two-receiver system can be implemented with either collocated or remote processing as shown in figures 4 and 5.

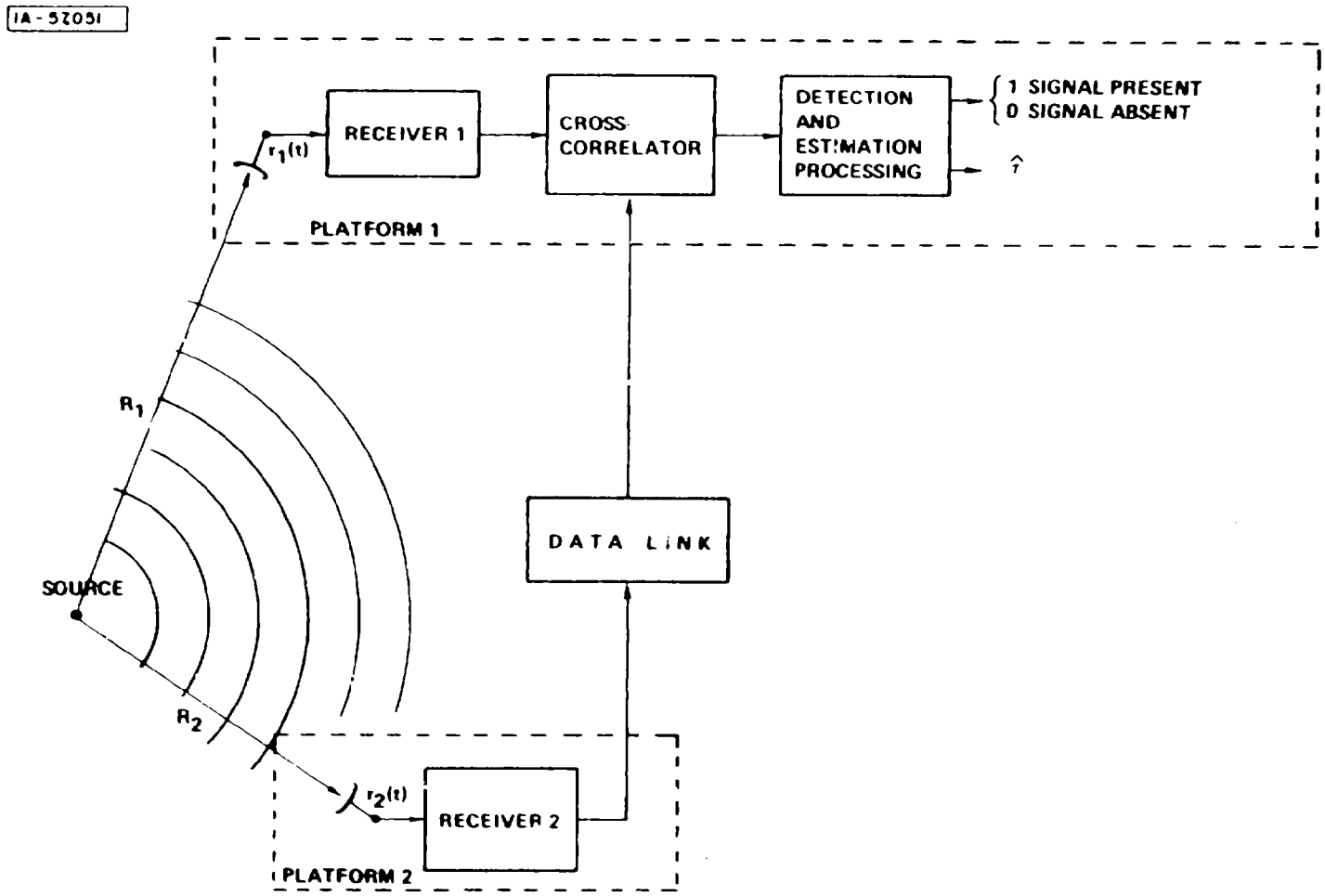

Figure 4. Collocated Processing System

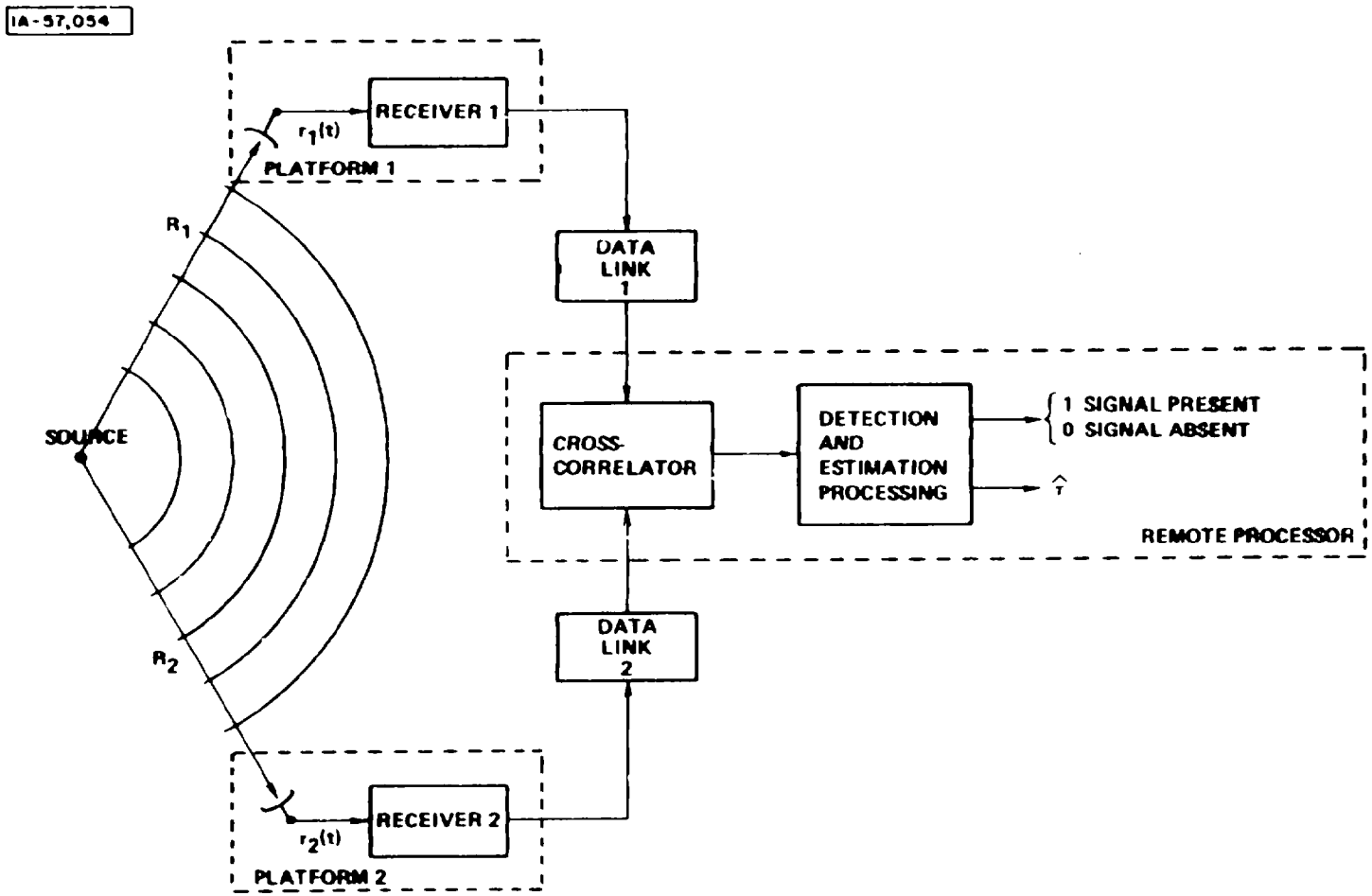

Figure 5. Remote Processing System

DOPPLER COMPENSATION

The previous analysis assumes that doppler effects, due to relative motions between the signal source and either or both receivers, are negligible. Doppler effects can be accounted for by modification of equations 4 and 6 to

$$\bar{r}_2(t) = \lambda \bar{s}(t-\tau)\, e^{j\phi}\, e^{j\omega_d(t-\tau)} + \bar{n}_2(t) \tag{16}$$

$$\bar{r}_{2,p} = \lambda \bar{s}_{p+m}\, e^{j\phi}\, e^{j\omega_d(p+m)\Delta t} + \bar{n}_{2,p} \tag{17}$$

where the relative (differential) doppler frequency between the two time-delayed signals in radians/second is

$$\omega_d = \frac{-\omega_o\left(\dot{R}_2 - \dot{R}_1\right)}{c} = \omega_{d_2} - \omega_{d_1} \quad . \tag{18}$$

This simple formulation assumes that the signal bandwidth W is large compared to each received doppler frequency, ω_{d_1} and ω_{d_2}, and that signal compression/expansion effects and effects due to higher-order motion terms (e.g., acceleration) are negligible over the prospective cross-correlation overlap times.

When no signal is present (hypothesis 0) or when the observed signals are uncorrelated (hypothesis 1), the linearly increasing doppler phase

introduced into the normalized sample cross-correlation function statistic, $\bar{R}(k)$ (see equations 5, 8, and 17), will not cause a change in the cross-correlator output signal-to-noise ratio (equation 10) since the phases are already random. For the correlated signal case (hypothesis 2) the loss in cross-correlator output signal-to-noise ratio for a particular doppler frequency, ω_d, and a prospective time-delay lag, k, can, by a modification of equation 10, be expressed as

$$L_d\left(k, \omega_d\right) = \frac{E\left[\left|\bar{R}(k)\right|^2/H_2, \omega_d\right] - E\left[\left|\bar{R}(k)\right|^2/H_1\right]}{E\left[\left|\bar{R}(k)\right|^2/H_2, \omega_d = 0\right] - E\left[\left|\bar{R}(k)\right|^2/H_1\right]} \quad . \tag{19}$$

By an examination of the components of equation 19, the doppler decorrelation loss factor, $0 \le L_d \le 1$, where $L_d = 1$ is the case of no loss, can be shown to satisfy the bound

$$L_d\left(k, \omega_d\right) \ge \frac{E\left[\left|\sum_{i=1}^{N(k)} |\bar{s}_i|^2 e^{-j\omega_d \Delta t i}\right|^2\right]}{E\left[\left|\sum_{i=1}^{N(k)} |\bar{s}_i|^2\right|^2\right]}$$

$$= \frac{\sum_{i=1}^{N(k)} \sum_{q=1}^{N(k)} E\left[|\bar{s}_i|^2 |\bar{s}_q|^2\right] e^{-j\omega_d \Delta t (i-q)}}{\sum_{i=1}^{N(k)} \sum_{q=1}^{N(k)} E\left[|\bar{s}_i|^2 |\bar{s}_q|^2\right]} \tag{20}$$

$$\ge \left|\frac{1}{N(k)} \sum_{i=1}^{N(k)} e^{-j\omega_d \Delta t i}\right|^2 = \left[\frac{\sin\left(N(k) \frac{\omega_d}{2} \Delta t\right)}{N(k) \sin\left(\frac{\omega_d}{2} \Delta t\right)}\right]^2$$

where the last inequality holds for moderate or large $N(k)$ and is proved in the appendix. This doppler decorrelation loss bound is illustrated in figure 6. Note that 3 dB of loss is obtained for

$$|f_d| = \left|\frac{\omega_d}{2\pi}\right| = \frac{0.443}{N(k)\ \Delta t} \quad . \tag{21}$$

If expected doppler decorrelation losses are unacceptable, they can be reduced as low as desired by a doppler compensation filter bank. Each doppler filter bank section compensates for a prospective doppler, ω_c, and implements a compensated normalized sample cross-correlation function of the form

$$\bar{R}(k) = \begin{cases} \dfrac{1}{N(k)} \displaystyle\sum_{i=k+1}^{N(k)+k} \bar{r}_{1,i}\, \bar{r}^{*}_{2,i-k}\, e^{j\omega_c \Delta t i} & 0 \le k \le \left(N_1 - 1\right) \\ \dfrac{1}{N(k)} \displaystyle\sum_{i=1}^{N(k)} \bar{r}_{1,i}\, \bar{r}^{*}_{2,i-k}\, e^{j\omega_c \Delta t i} & -\left(N_2 - 1\right) \le k \le 0 \end{cases} \tag{22}$$

which is a Fourier Transform of the $N(k)$ normalized cross-correlation product samples for a lag of k, $\bar{r}_{1,i}\, \bar{r}^{*}_{2,i-k}$, and can be implemented for a discrete number of equally spaced compensated frequencies

$$\omega_c = r\Delta\omega = r\left(\frac{2\pi}{N\Delta t}\right) \qquad r = 1,\ 2,\ \ldots,\ N \tag{23}$$

where

$$N = \min\left(N_1,\ N_2\right) \tag{24}$$

IA-60,184

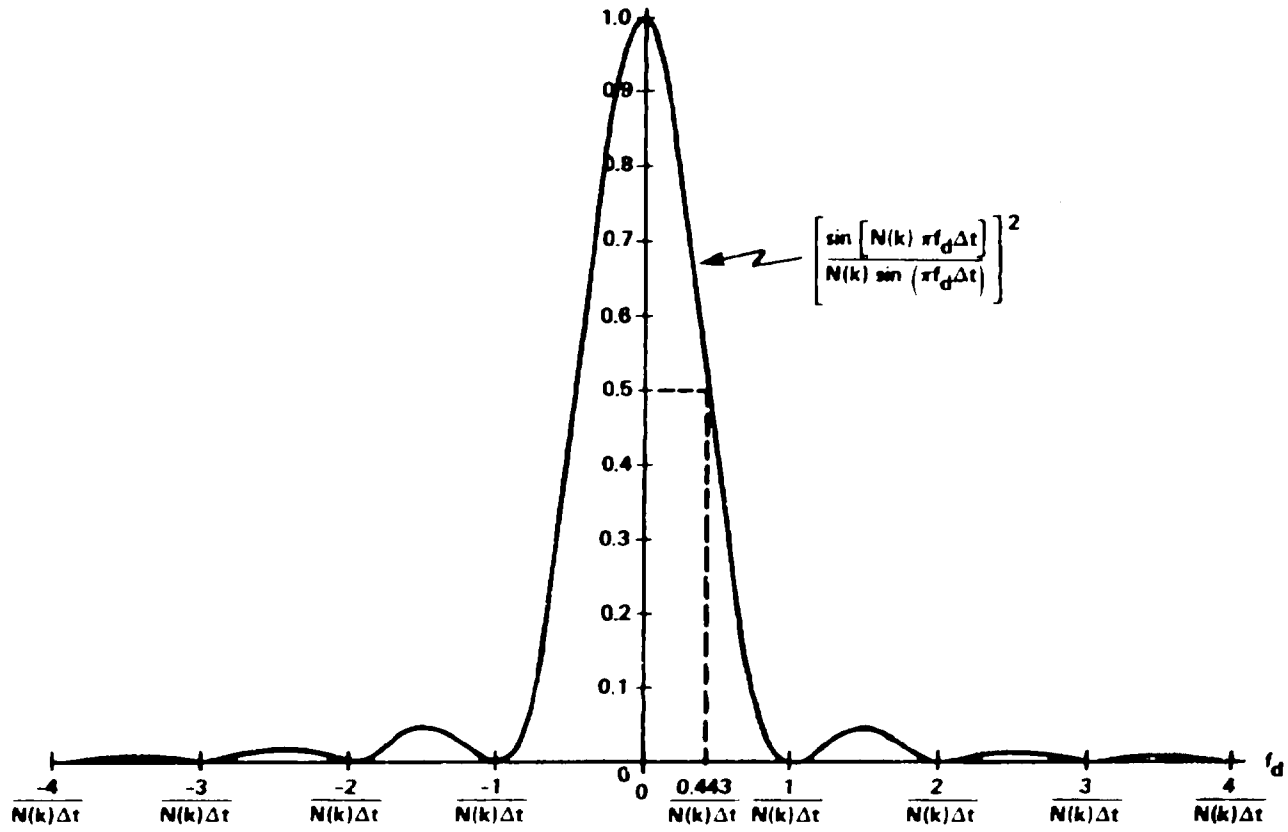

Figure 6. Doppler Decorrelation Loss Bound

by two complex shift registers of length N, N complex multipliers, and an N Point Discrete Fourier Transform as illustrated in figure 7.

Doppler compensation processing will reduce output signal-to-noise ratio loss to $L_d(k, \omega_d - \omega_c)$ where ω_c is the closest compensation frequency to ω_d. If the differential doppler is uniformly distributed over the compensated frequency band, the average doppler decorrelation loss factor for a lag of k will be bounded by

$$L_d(k) \geq \frac{N\Delta t}{\pi} \int_0^{\frac{\pi}{N\Delta t}} \left[\frac{\sin\left(N(k)\,\frac{\omega_d}{2}\,\Delta t\right)}{N(k)\,\sin\left(\frac{\omega_d}{2}\,\Delta t\right)} \right]^2 d\omega_d \quad . \tag{25}$$

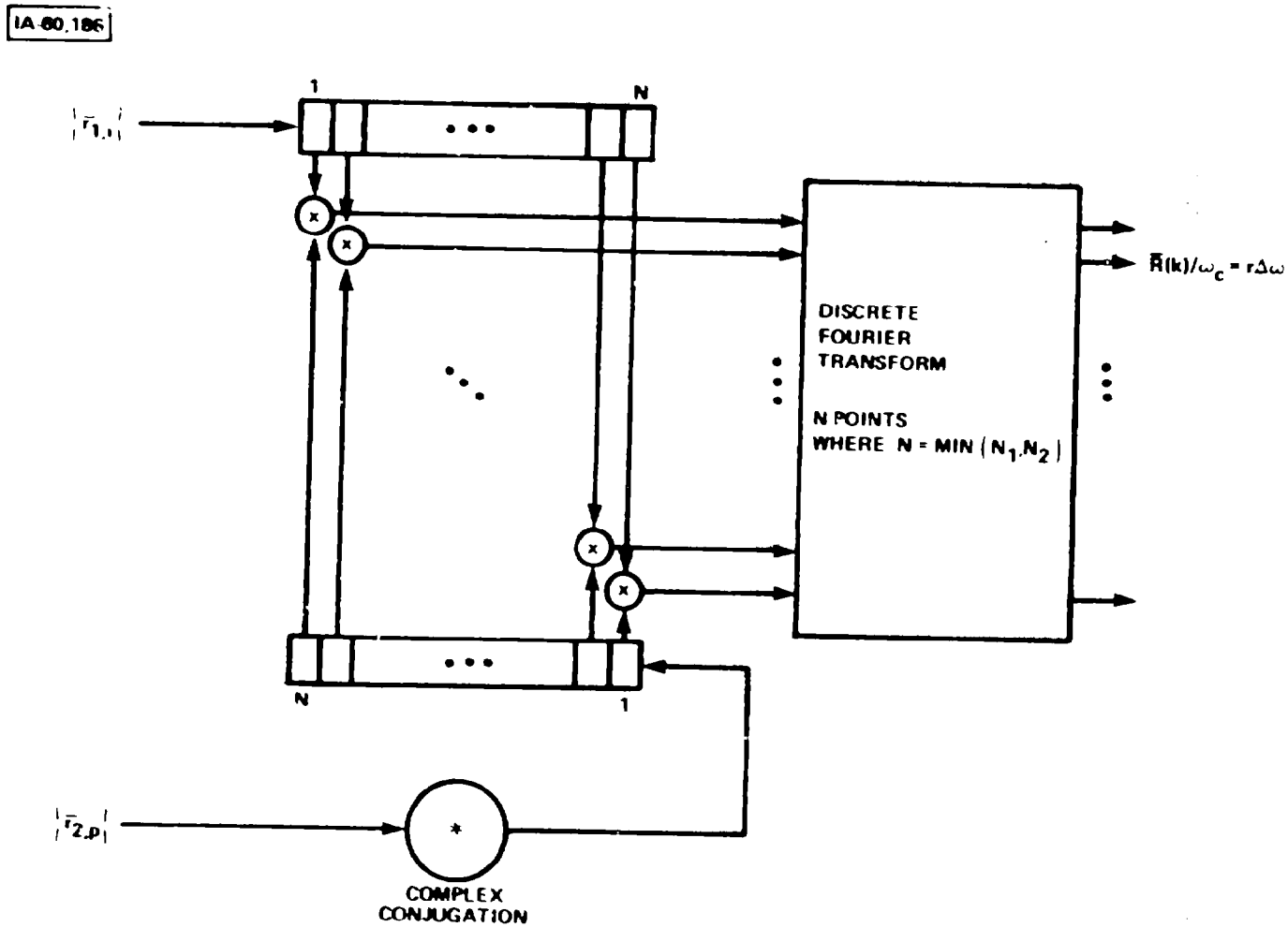

Figure 7. Doppler Compensation Processing

DATA TRANSFER REDUCTION BOUNDS

Direct implementation of the optimal two-receiver coherent passive location system developed above will require the transfer of one or both of the complex sequences, $\bar{\underline{r}}_1$ and $\bar{\underline{r}}_2$, with a high degree of accuracy (large number of bits representing each receiver sample). Since higher place bits carry diminishing quantities of information, it is clear that truncation of high place bits will reduce data transfer requirements without significantly reducing system performance. Techniques for minimizing the data transfer required to maintain reliable system performance are desired. The general one-channel data transfer reduction situation is illustrated in figure 8.

Rate distortion theory provides bounds on data transfer reduction for particular types of information sources and distortion (error) measures. The information of a memoryless, Gaussian-distributed source with a power of σ^2 can be transferred over a noiseless channel, as illustrated in figure 9, with a mean square error between the input and output complex sequences of

$$D = E\left[|\bar{v}_i - \bar{u}_i|^2\right] \tag{26}$$

by the use of an information rate, R, of [5]

$$R = -\log_2\left(\frac{D}{\sigma^2}\right) \qquad 0 \le D \le \sigma^2 \tag{27}$$

where the rate is in bits per complex sample. This rate is also sufficient for any non-Gaussian source [5].

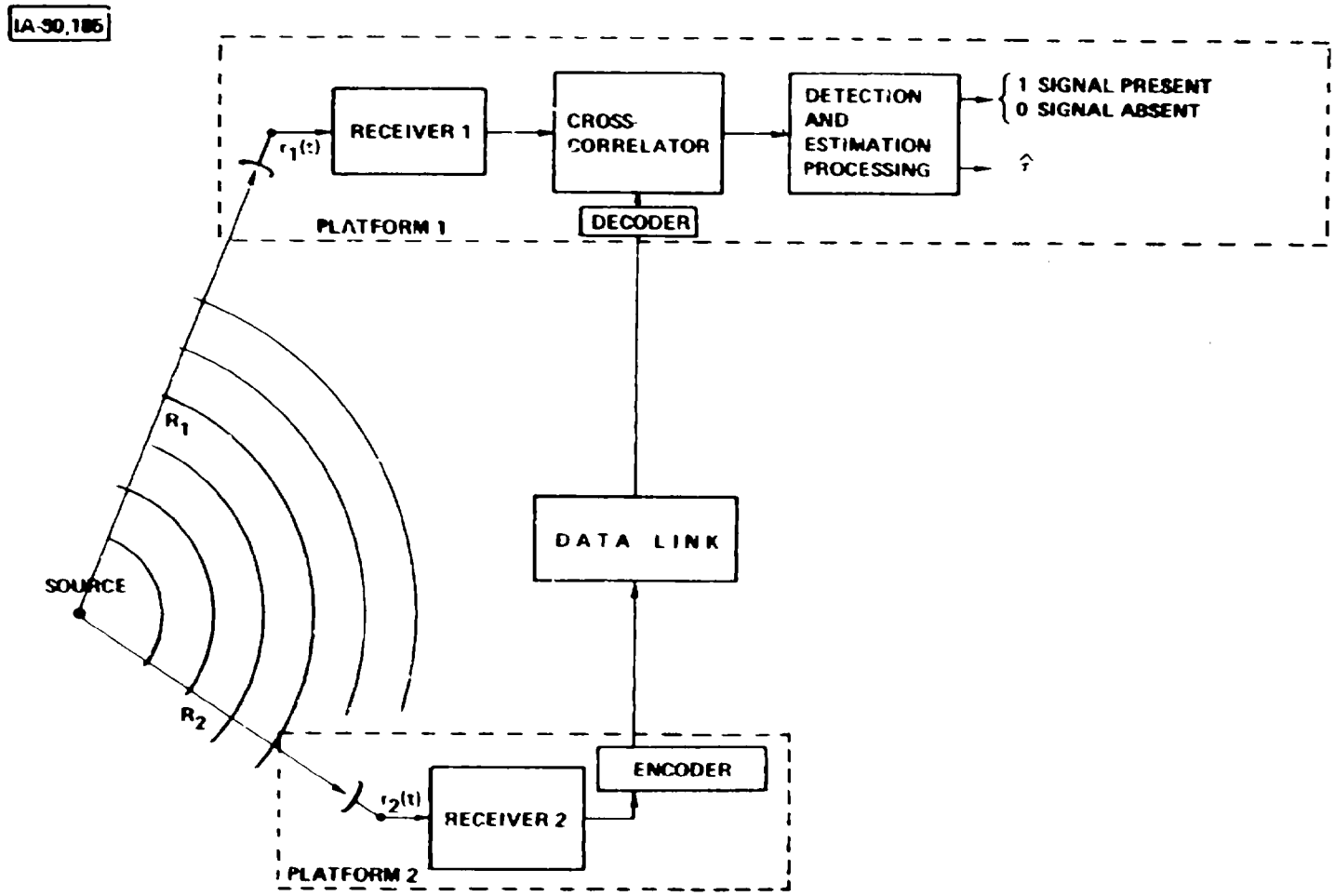

Figure 8. One-Channel Data Transfer Reduction System

IA-60,183

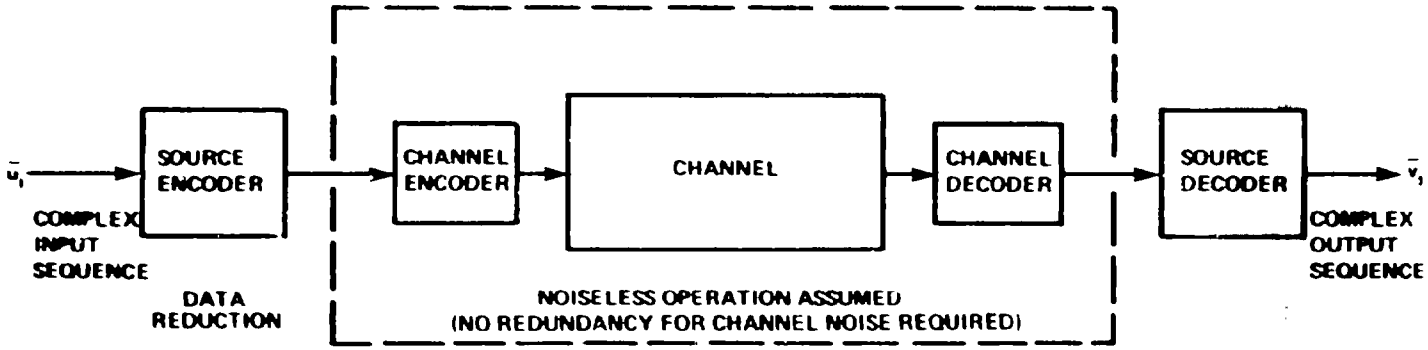

Figure 9. Rate Distortion Theory Model

For the one-channel data transfer reduction situation of figure 8 where the data of receiver 2 is assumed to be quantized, the cross-correlator output signal-to-noise ratio (see equations 8 and 10) can be expressed in the form

$$\Gamma(k) = \frac{E\left[\left|\frac{1}{N(k)}\sum_{i=1}^{N(k)} \bar{r}_{1,i}\left(\bar{r}^*_{2,i-k} + \bar{q}^*_{2,i-k}\right)\right|^2 \Big/ H_2\right]}{E\left[\left|\frac{1}{N(k)}\sum_{i=1}^{N(k)} \bar{r}_{1,i}\left(\bar{r}^*_{2,i-k} + \bar{q}^*_{2,i-k}\right)\right|^2 \Big/ H_1\right]} - 1 \qquad (28)$$

where $\bar{q}_{2,p}$ is the complex quantizing noise of the $\bar{r}_{2,p}$ sample. The loss in cross-correlator output signal-to-noise ratio, $0 \leq L_q \leq 1$, for a particular lag, k, can be shown to be of the form

$$L_q(k) = \frac{1}{1 + \epsilon^2} \qquad (29)$$

where

$$\epsilon^2 = \frac{E\left[|\bar{q}_{2,p}|^2\right] + 2\,\mathrm{Re}\left\{E\left[\bar{q}_{2,p}\,\bar{r}^*_{2,p}\right]\right\}}{E\left[|\bar{r}_{2,p}|^2\right]} \leq \frac{E\left[|\bar{q}_{2,p}|^2\right]}{E\left[|\bar{r}_{2,p}|^2\right]} = \frac{D}{\sigma^2} \qquad (30)$$

with

$$\sigma^2 = E\left[|\bar{r}_{2,p}|^2\right] = 2\,E\left[\left\{\lambda s(t-\tau)\right\}^2\right] + 2\,E\left[n_2^2(t)\right] \qquad (31)$$

and D/σ^2 is the ratio of mean quantizing noise power to mean quantizer input signal power. The inequality of equation 30 holds due to the known nonpositive correlation between quantizer input signal and quantizing noise when the quantizer bin outputs are chosen as the mean input values of each bin [6] or when other more general conditions are satisfied. Thus, the quantization loss factor has been shown to be bounded by

$$L_q = \frac{1}{1+\epsilon^2} \geq \frac{1}{1+\frac{D}{\sigma^2}} \geq \frac{1}{1+2^{-R}} \tag{32}$$

where the last inequality is obtained by the application of the bound of equation 27. The rate distortion bound of equation 32, which holds for all input signal-to-noise ratios, is shown in figure 10.

If the received signals and noises are Gaussian, performance within 1/2 bit per complex sample of the rate distortion bound, as shown in figure 10, can be obtained for all input signal-to-noise ratios by either [5]:

1. Optimal but complex entropy encoding combined with the use of uniform I and Q quantization bins, or

2. Uncoded (direct) transfer combined with the use of optimal minimum mean square Max [7] quantization bins.

Either of these techniques would be moderately complex to implement and both assume knowledge of the received signal and noise probability densities. Performance would degrade significantly unless adaptive processing were also provided to adjust for unknown amplitude and/or distribution.

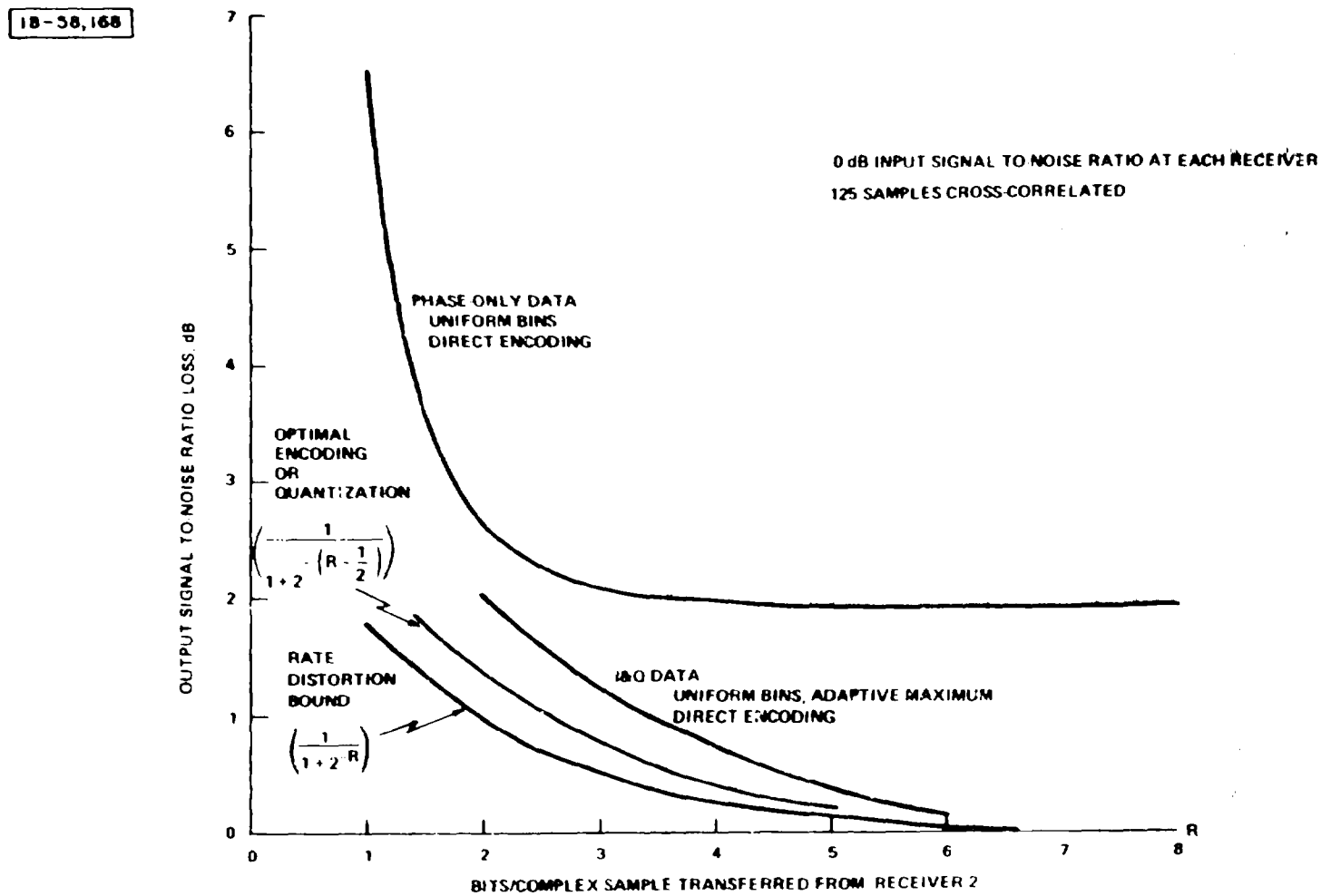

Figure 10. Cross-Correlation Signal-to-Noise Ratio Loss Compared to Bound

CANDIDATE DATA TRANSFER REDUCTION TECHNIQUES

The performance of two simple, robust data transfer reduction techniques was obtained by digital simulation for the one-channel situation of figure 8 with stationary, white, Gaussian signal and noise sequences. Both techniques utilized direct decimal-to-binary encoding (uncoded transfer).

The first data transfer reduction technique transferred and cross-correlated only the quantized phase of each complex sample of receiver 2. The simulated phase cross-correlation was of the form

$$R_{\theta_1 \tilde{\theta}_2}(k) = \begin{cases} \dfrac{1}{N(k)} \displaystyle\sum_{i=k+1}^{N(k)+k} e^{j\left(\theta_{1,i} - \tilde{\theta}_{2,i-k}\right)} & 0 \le k \le \left(N_1 - 1\right) \\ \dfrac{1}{N(k)} \displaystyle\sum_{i=1}^{N(k)} e^{j\left(\theta_{1,i} - \tilde{\theta}_{2,i-k}\right)} & -\left(N_2 - 1\right) \le k \le 0 \end{cases} \tag{33}$$

where the tilde denotes a quantized version of the corresponding received phase samples

$$\theta_{1,i} = \tan^{-1}\left[\frac{Q_{1,i}}{I_{1,i}}\right] \quad \text{and} \quad \theta_{2,p} = \tan^{-1}\left[\frac{Q_{2,p}}{I_{2,p}}\right] . \tag{34}$$

Uniform phase quantization bins, as illustrated in figure 11, were utilized with the center of each bin used as the quantizer output. Because of the assumed uniformly distributed random receiver phase, $\theta_{2,p}$, direct encoding with uniform bins achieves the optimal rate distortion bound for Gaussian sources of $R = -\frac{1}{2}\log_2\left(\frac{D}{\sigma_\theta^2}\right)$ where $\sigma_\theta^2 = \frac{\pi^2}{3}$. Thus, phase can be transferred with minimal distortion by extremely simple quantization and encoding techniques. Simulation results obtained for the case of 0 dB input signal-to-noise ratio at each receiver are shown in the upper curve of figure 10. Receiver 1 utilized "full" phase data (10 bits per phase sample were actually used). Receiver 2 utilized varying levels of bits per phase sample as indicated by the abscissa of figure 10. The curve shows that, for the 0 dB input conditions, as phase quantization increases data transfer reduces faster than loss increases until 2 bits per sample is reached. Note that for phase-only cross-correlation processing the dropping of amplitude information at both receivers results in a minimum loss of 2 dB for the 0 dB input conditions.

The second data transfer reduction technique used half the available bits per complex sample for the I component and the other half for the Q component. Uniform quantization bins symmetrically spaced about 0 were utilized with the center of each bin used as the quantizer output. To eliminate the use of unneeded quantization bins and to provide adjustment for unknown amplitudes, the maximum magnitudes of both the I and Q components of each receiver's complex sample sequences were determined before quantization and the positive and negative quantization bin limits of each receiver were adaptively adjusted to the receiver's maximum component magnitude. Results for the case of 0 dB input signal-to-noise at each

IA-82671

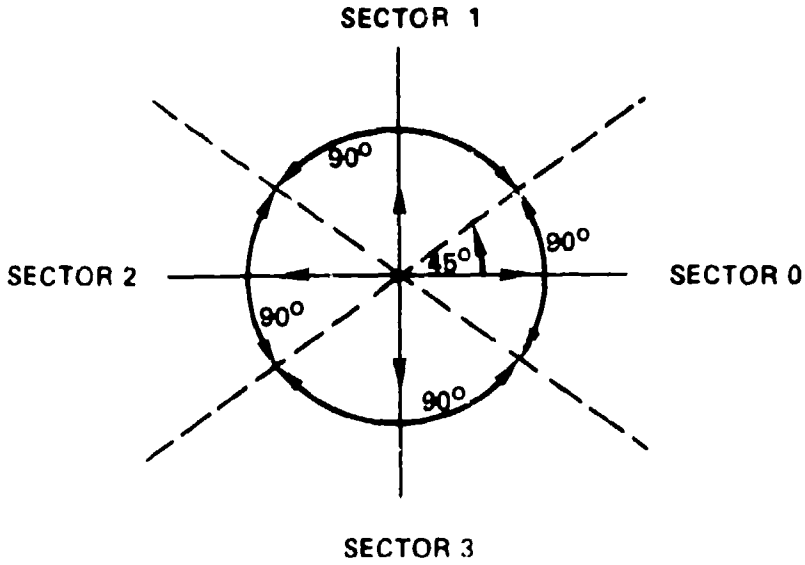

Figure 11. Phase Quantization Sectors, 2-Bit Case

receiver are shown in figure 10. Receiver 1 utilized "full" I and Q data (5 bits per I sample and 5 bits per Q sample were actually used). For the 0 dB input conditions, data transfer reduces faster than loss increases until 2 bits per complex sample (1 bit I and 1 bit Q) is reached. In general, the I and Q technique performs better because it does not drop amplitude information. However, for the 2-bit case, where minimal data transfer is attained for a specified performance for the 0 dB inputs, essentially the same data are transferred from receiver 2 for both techniques. The 0.6 dB performance improvement of the I and Q technique is attributable to the use of full I and Q data from receiver 1 instead of merely full-phase data. Hybrid techniques that allocate part of the receiver 1 bits to phase and part to amplitude would provide intermediate performance between the I and Q and the phase-only curves (e.g., see [8], [9], and [10]). This I and Q technique was used because of its simplicity. It is not optimal. However, as shown in figure 10, less than 1 dB could be gained for these conditions by use of the more complex data transfer reduction techniques discussed in the previous section. Note that since the I and Q technique provides less performance loss, a specified level of system performance would be provided by shorter observation intervals. Shorter intervals, in turn, would reduce the doppler decorrelation loss.

CONCLUSIONS

The optimal passive coherent location system for the discrete-time, bandpass case and its performance characteristics, including the effects of doppler, were presented for the fundamental two-receiver system. These systems are robust and make optimal use of the observed information. Since large quantities of data must be transferred to implement these systems, the performance losses incurred by two simple data transfer reduction techniques were compared to performance loss bounds obtained from rate distortion theory and to the losses of two of the best available, but considerably more complex, data reduction techniques. I and Q quantization with simple uniform, adaptive bins was shown to provide data transfer reduction close to those attainable by the more complex techniques.

APPENDIX

The Fourier Transform of the discrete sequence of N uniformly spaced, complex samples,

$$\left\{ f_i = f(i\Delta t) \right\}_{i=1}^{N} ,$$

is

$$F(\omega) = \sum_{i=1}^{N} f_i \, e^{-j\omega\Delta t i} \quad . \tag{A-1}$$

Assume the f_i samples are taken from a bandlimited process of bandwidth W Hertz and are taken at or above the Nyquist rate, $\Delta t \leq 1/W$. By interchanging frequency and time in the sampling theorem for bandlimited signals [1], the bandlimited Fourier transform may be expanded in terms of its frequency samples spaced at or above the equivalent Nyquist rate $\Delta\omega = 2\pi/N\Delta t$, since the signal is time-limited. Thus, the Fourier transform of equation A-1 can be expanded as

$$F(\omega) = \sum_{i=0}^{N-1} F_i \, \frac{\sin\left[N\left(\frac{\omega\Delta t}{2} - \frac{\pi i}{N}\right)\right]}{N \sin\left(\frac{\omega\Delta t}{2} - \frac{\pi i}{N}\right)} \tag{A-2}$$

where

$$F_i = F(i\Delta\omega)$$

and

$$\Delta\omega = 2\pi/N\Delta t \quad .$$

Consequently, the mean squared magnitude of $F(\omega)$ can be expressed as

$$E\left[|F(\omega)|^2\right] = E\left[|F_o|^2\right]\left\{\frac{\sin\left[N\left(\frac{\omega\Delta t}{2}\right)\right]}{N\sin\left(\frac{\omega\Delta t}{2}\right)}\right\}^2$$

$$+\sum_{i=1}^{N-1} E\left[|F_i|^2\right]\left\{\frac{\sin\left[N\left(\frac{\omega\Delta t}{2}-\frac{\pi i}{N}\right)\right]}{N\sin\left(\frac{\omega\Delta t}{2}-\frac{\pi i}{N}\right)}\right\}^2 \tag{A-3}$$

$$+2\sum_{\substack{k=1\\k\neq i}}^{N-1}\sum_{i=1}^{N-1} \mathrm{Re}\, E\left[F_i F_k^*\right]\left\{\frac{\sin\left[N\left(\frac{\omega\Delta t}{2}-\frac{\pi i}{N}\right)\right]}{N\sin\left(\frac{\omega\Delta t}{2}-\frac{\pi i}{N}\right)}\right\}$$

$$\cdot\left\{\frac{\sin\left[N\left(\frac{\omega\Delta t}{2}-\frac{\pi k}{N}\right)\right]}{N\sin\left(\frac{\omega\Delta t}{2}-\frac{\pi k}{N}\right)}\right\} \quad .$$

It is well known that the Fourier frequency samples, $F_i = F(i\, 2\pi/N\Delta t)$, are essentially uncorrelated and their correlation decreases to 0 at a rate of at least $1/N$ as the number of samples, N, increases [11]. Consequently, for moderate or large N, the second summation of equation A-3 will always be larger than the third (double) summation. Thus, for moderate or large N,

$$E\left[|F(\omega)|^2\right] \geq E\left[|F_o|^2\right]\left\{\frac{\sin\left[N\left(\frac{\omega\Delta t}{2}\right)\right]}{N\sin\left(\frac{\omega\Delta t}{2}\right)}\right\}^2 = E\left[|F_o|^2\right]\left|\frac{1}{N}\sum_{i=1}^{N} e^{-j\omega\Delta ti}\right|^2 . \tag{A-4}$$

The result of equation A-4 can be expressed, by the use of equation A-1, as

$$\frac{\sum_{k=1}^{N}\sum_{i=1}^{N} E\left[f_i f_k^*\right] e^{-j\omega\Delta t(i-k)}}{\sum_{k=1}^{N}\sum_{i=1}^{N} E\left[f_i f_k^*\right]} \geq \left|\frac{1}{N}\sum_{i=1}^{N} e^{-j\omega\Delta ti}\right|^2 . \tag{A-5}$$

REFERENCES

[1] W. W. Peterson, T. G. Birdsall, and W. C. Fox, "The Theory of Signal Detectability," IRE Trans. on Info. Th., Vol. 4, Sept. 1954, pp. 171-212.

[2] W. M. Hall, "Antenna Beam-Shape Factor in Scanning Radars," IEEE Trans. on Aero. & Elect. Sys., Vol. 4, May 1968, pp. 402-409.

[3] D. J. Matthiesen, "Performance Characteristics of Optimal and Quantized, Phase-Only Time-of-Arrival Systems," IEEE Int'l. Radar Conf. Record, April 1980, pp. 438-444. Also appeared as a MITRE Technical Paper, MTP-204, March 1980.

[4] J. I. Marcum, "A Statistical Theory of Target Detection by a Pulsed Radar," IRE Trans. on Info. Th., Vol. 6, April 1960, pp. 59-267.

[5] A. J. Viterbi and J. K. Omura, Principles of Digital Communication and Coding, McGraw Hill, 1979, pp. 498-500.

[6] J. A. Bucklew and N. C. Gallagher, "A Note on Optimal Quantization," IEEE Trans. on Info. Th., Vol. 25, May 1979, pp. 365-366.

[7] J. Max, "Quantizing for Minimum Distortion," IEEE Trans. on Info. Th., Vol. 6, March 1960, pp. 16-21.

[8] W. A. Pearlman, "Polar Quantization of a Complex Gaussian Random Variable," IEEE Trans. on Comm., Vol. 27, June 1979, pp. 892-899.

[9] J. A. Bucklew and N. C. Gallagher, "Quantization Schemes for Bivariate Gaussian Random Variables," IEEE Trans. on Info. Th., Vol. 25, Sept. 1979, pp. 537-543.

[10] J. A. Bucklew and N. C. Gallagher, "Two-Dimensional Quantization of Bivariate Circularly Symmetric Densities," IEEE Trans. on Info. Th., Vol. 25, Nov. 1979, pp. 667-671.

[11] W. B. Davenport and W. L. Root, An Introduction to the Theory of Random Signals and Noise, McGraw Hill, 1958, pp. 94-95.