AD-A103 902 NATIONAL AERONUATICS AND SPACE ADMINISTRATION MOFFET--ETC F/G 20/4
A REVIEW OF UNSTEADY TURBULENT BOUNDARY-LAYER EXPERIMENTS.(U)
JUN 81 L W CARR
UNCLASSIFIED NASA-A-8595 NASA-TM-81297 NL

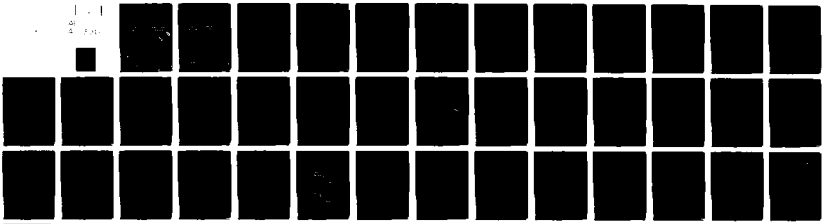

END
DATE
FILMED
0 81
DTIC

NASA Technical Memorandum 81297

USAAVRADCOM TR 81-A-13

LEVEL II

AD A103902

# A Review of Unsteady Turbulent Boundary-Layer Experiments

Lawrence W. Carr

DTIC ELECTE SEP 8 1981 S D H

DTIC FILE COPY

June 1981

DISTRIBUTION STATEMENT A
Approved for public release;
Distribution Unlimited

NASA
National Aeronautics and
Space Administration

United States Army
Aviation Research
and Development
Command

81 9 08 70

NASA Technical Memorandum 81297

USAAVRADCOM TR 81-A-13

54

# A Review of Unsteady Turbulent Boundary-Layer Experiments

Lawrence W. Carr, Aeromechanics Laboratory
AVRADCOM Research and Technology Laboratories
Ames Research Center, Moffett Field, California

DTIC
ELECTE
SEP 8 1981
S D
H

DISTRIBUTION STATEMENT A
Approved for public release;
Distribution Unlimited

NASA
National Aeronautics and
Space Administration

**Ames Research Center**
Moffett Field California 94035

United States Army
Aviation Research and
Development Command
St. Louis, Missouri 63166

Accession For
NTIS GRA&I ☑
DTIC TAB ☐
Unannounced ☐
Justification
By
Distribution/
Availability Codes
Avail and/or
Dist Special
A

# A Review of Unsteady Turbulent Boundary-Layer Experiments

LAWRENCE W. CARR

U.S. Army Aeromechanics Laboratory
Research and Technology Laboratories (AVRADCOM)
Ames Research Center, Moffett Field, Calif., U.S.A.

## Summary

The essential results of a comprehensive review of existing unsteady turbulent boundary-layer experiments are presented. Different types of unsteady flow facilities are described, and the related unsteady turbulent boundary-layer experiments are cataloged and discussed. The measurements that have been obtained in the various experiments are described, and a complete list of experimental results is presented. All the experiments that measured instantaneous values of velocity, turbulence intensity, or turbulent shear stress are identified, and the availability of digital data is indicated. The results of the experiments are analyzed, and several significant trends are identified. An assessment of the available data is presented, delineating gaps in the existing data, and indicating where new or extended information is needed. Guidelines for future experiments are presented.

## Introduction

During the past few years, there has been a significant increase in the level of effort directed toward the analysis of unsteady turbulent boundary layers. A wide range of theoretical methods have proliferated during this period, while the existing experimental data base has been meager, scattered, and disparate. Several experimental programs are presently under way to produce further experimental data for use in comparison to theory, but the data base is still widely dispersed.

Since such a wide range of experimental data exists without a strong common pattern, there is an increasing need for central documentation of the various results. In this way, the various research efforts would be more readily available, and comparison of the results can be facilitated. Several workshops on unsteady turbulent boundary-layer experimental research have been organized by the present author. During these workshops, it has become increasingly clear that a careful review of the existing data, as well as a documentation of the current experimental programs in a single source, would be of great value to future endeavors in this area.

To satisfy this need, an AGARDograph has been prepared which catalogs all the pertinent sources, much of the relevant data, and indications of future studies. A comprehensive international literature search has been performed, identifying those groups who have actually published work in the subject area, as well as disclosing sources that have valuable but unpublished data appropriate to the present subject. Selected research personnel in the United States and several European countries have been visited to discuss and obtain pertinent data sets and descriptions of experiments. The data from these various sources are now cataloged and prepared in a form appropriate for general distribution and analysis; more than 40 pertinent experiments are reviewed.

In the present paper, highlights from the AGARDograph are presented, including description of both past and present experimental programs. The types of experimental data that are available are discussed, and experimentally observed characteristics of unsteady turbulent boundary layers are assessed. Guidelines for future experiments are presented.

## Types of Experimental Facilities

The procedure for experimentally modeling an unsteady viscous flow problem in a laboratory is always a difficult task. In fact, the ingenuity that has been demonstrated by the various experimentalists is quite impressive. A brief review of some examples of tunnel design will indicate the range of techniques that have been employed. The first type of facility, shown in Fig. 1, was used by Karlsson (1958) for his pioneering experiment studying the response of an unsteady turbulent boundary layer on a flat plate. The basic facility is an open-return wind tunnel; the flow oscillation is produced by a set of rotating vanes installed near the exit of the tunnel. As these vanes rotate, they produce a variable blockage that causes the tunnel flow to pulsate. Variations of this technique have included controlled-speed vanes installed upstream of the test section (Simpson et al., 1978), a slotted cylinder at the tunnel exit (Acharya and Reynolds, 1975), a rotating butterfly valve at the exit (Cousteix et al., 1977), and several others. The technique of variable blockage has also been used in unsteady pipe flow by Schultz-Grunow (1940), Ramaprian and Tu (1980), Mizushina et al. (1973), Lu et al. (1973), and others; it remains one of the most common of the experimental techniques for creating pulsation in the free-stream flow.

Some other, more esoteric techniques are also of interest. One successful approach incorporates the tunnel wall as a part of the oscillation mechanism. Brembati (1975) installed a flexible section in the ceiling of an open-return wind tunnel (Fig. 2), and sinusoidally oscillated this movable ceiling, thus producing a combination of variable free-stream velocity and adverse pressure gradient. The technique used by Patel (1977), Kenison (1977), and Pericleous (1977) in their studies incorporates the tunnel structure in still another way. In this case, as shown in Fig. 3, the flow from the contraction section of the tunnel enters a partially open test section. The ceiling and floor of the test section are removed; the upper and lower surfaces of the entrance section of the tunnel are continued into the test section, and are carefully constructed to permit smooth deflection of these surfaces as flaps. These flaps are sinusoidally oscillated in pitch; they induce a series of traveling vortices which move down the test section, creating an oscillatory perturbation velocity on the test section.

Still another technique for producing an unsteady flow has been devised by Parikh et al. (1981). In this case (Fig. 4), the entrance flow is maintained at a constant value by holding the total mass-flow rate constant and an oscillating flow with varying magnitude of adverse pressure gradient is produced in the test section by removing fluid from the wall opposite the test surface in a programmed manner. The tunnel surface opposite the test surface is partitioned into two porous sections, one directly below the test surface, the other downstream. A slotted plate controls the amount of fluid drained from each section. As the plate moves back and forth, varying amounts of fluid exit from the tunnel through the forward or aft sections of the porous surface, while the total fluid flow remains constant through the cycle.

These are only a few examples of the techniques used to produce oscillatory flow in the laboratory. The interested reader is referred to the AGARDograph (Carr, 1981) for descriptions of the many other facilities that have been devised. These techniques demonstrate the novelty of the various designs; they also show that the generation of unsteady flows in the laboratory is a very difficult and complex task. Each of the facilities discussed has both benefits and limitations; no one design is clearly better than the others. It is important to realize that results obtained in facilities having such diverse design and performance characteristics as these should be compared with special care.

## Types of Flows Reviewed

Each engineering application has had its own set of requirements. For example, the information needed for the analysis of an unsteady heat-transfer problem is significantly different from the information needed for accurate prediction of dynamic stall. The design of a fluidic device depends on parameters much different from those required for design of a compressor blade. Thus, each of these engineering applications has placed a strict limitation on the type of flow result that was sought. The basic fluid mechanics common to all of these problems has always been of interest. However, parametric variation of flow conditions has not been possible in most of the facilities. Instead, many of these experiments have been exploratory in nature, attempting to identify potential areas of interest rather than studying the behavior of the unsteady turbulent boundary-layer itself. No single experiment has been able to study all the parameters that are necessary to define the behavior of unsteady turbulent boundary layers.

Thus, there are gaps in the existing data, even though many types of flows have been studied. The many laminar, transitional, and turbulent unsteady flow experiments that have been performed are fully referenced in the AGARDograph. Only the unsteady turbulent boundary-layer experiments will be discussed here. These include flat plate flows, with and without pressure gradient, two-dimensional channel, pipe, diffuser, airfoil, and compressor blade flows. Jet and wake flows have not been included since the survey was limited to viscous flows in contact with a solid boundary.

The existing turbulent boundary-layer experiments have been summarized in Fig. 5. Note that certain authors' names are presented in bold type — these experiments are documented in Carr (1981), and contain instantaneous measurements of the unsteady turbulent boundary-layer characteristics. The light-faced type denotes experiments of general interest, but without instantaneous data. In Fig. 6, pipe, airfoil, and cascade experiments are presented, as well as a list of new experiments from which results have not yet been acquired by the present author.

The data for the experiments that have been included in the AGARDograph are presented in the form supplied by the original author whenever possible; no smoothing or modification of the data has been performed. Although every effort has been made to ensure a complete list of available experiments,

particularly those with instantaneous ensemble-averaged data, there certainly are experiments that have not been discussed or were overlooked completely. These omissions were definitely not intentional. Please send documentation of these experiments to the present author for inclusion in the data bank and catalog. Figure 7 shows the format used to document the various experiments presented in the AGARDograph. The information indicated in this figure is recommended as a minimum level of documentation that should be recorded for any future unsteady turbulent boundary-layer experiment.

## Data Acquisition and Analysis

The acquisition of data for an unsteady turbulent boundary layer can be a formidable task. For example, the velocity in an unsteady turbulent boundary layer can be measured in a variety of ways: electrochemically (Mizushina et al., 1973); by use of a micropropeller (Jonnson and Carlsen, 1976); hot wire anemometers (Cousteix et al., 1977); single-beam lasers (Reynolds et al., 1981); dual-beam lasers (Simpson et al., 1980); as well as other techniques. The unsteady velocity signal is a combination of mean, periodic, and random fluctuations of varying magnitude, and extraction of the pertinent components requires varying levels of sophistication. Since the various experiments have differing goals, data analysis techniques vary as well. As shown in Fig. 8, there are several levels of sophistication which can be employed for analysis of the resultant signal. The least difficult — the time-averaged mean velocity — can be obtained by performing a digital or analog long-time average of the turbulent velocity signal. This approach is also used to obtain the RMS value for the turbulence intensity. The next level of sophistication is the measurement of the periodic component of velocity. There are several ways this information can be obtained, including cross-correlation of the turbulent velocity signal with a sine wave having a frequency equal to the driving frequency. Another approach is to Fourier transform or harmonically analyse the unsteady turbulent signal and extract the Fourier coefficients associated with the fundamental and higher harmonics of the oscillation. If even more information is desired about the flow, a phase-averaging device can be used which samples the turbulent signal at fixed phases in each cycle, storing the value of the signal at each specified phase and retaining the summed signal either by analog or digital means. Each of these methods can produce an output containing the amplitude and phase of the first harmonic response of the boundary layer to the imposed oscillation. In addition, the phase-averaged signal contains detailed information about

the time history of the velocity signal during a cycle. This information can be of great value when complex flow phenomena are being studied, because all the harmonic content of the original signal potentially can be retained.

The existing turbulent boundary-layer experiments have been classified in Figs. 9 and 10, based on these different levels of analysis: time-averaged mean (level I), periodic amplitude and phase (level II), single-component ensemble-average (level III), and dual-component ensemble- or phase-average (level IV). In these figures, bold type indicates data recorded by the originating author; light type denotes information that can be reconstructed from data presented in the supporting documents (e.g., Tomsho (1978) supplied ensemble-averaged data for velocity; time-averaged mean data can then be reconstructed from this information).

## Evaluation of Experimental Results

As noted earlier, over 40 unsteady turbulent boundary-layer experiments have been identified. This quantity precludes individual analysis in the present paper. However, the large number of experiments offers a unique opportunity for comparison of results. In particular, several significant observations can be made.

Time-Mean Averages: For all the flows examined, the experiments demonstrate that the time-averaged mean velocity, $\bar{U}(y)$, is the same as the value expected for a steady flow having a velocity corresponding to the mean of the oscillatory outer flow, $U_m(y)$. This has been observed on a flat plate by Karlsson (1958), where $\bar{U}(y)$ was demonstrated to be the same as $U_m(y)$ over a wide range of frequencies and amplitudes. At the other end of the range of experimental complexity, $\bar{U}(y)$ on a stator blade in a jet engine compressor was demonstrated by Evans (1978) to be the same as the steady $U_m(y)$ (Fig. 11).

There are certainly conditions and situations where the fact that the $\bar{U}(y)$ of the unsteady flow is the same as the $U_m(y)$ from steady flow is of significant value — unsteady heat transfer, mean diffuser behavior — situations where only the mean performance characteristics are needed for analysis of the problem. However, this equivalence, as significant as it is, can be very misleading if the purpose of the research is to identify the fluid mechanics of the unsteady flow field in question. A good example is Karlsson's experiment itself, where he observed regions of reversed flow on the flat plate,

even though $\bar{U}(y)$ was the same as $U_m(y)$. Evans (1978) demonstrates that even though $\bar{U}(y)$ is the same as $U_m(y)$, no assumption can be made about the unsteadiness of the flow itself. In his experiments, the flow changed from laminar to turbulent through the cycle (Fig. 12). This change was completely masked by the time-averaging process (see Fig. 11). Another example, the diffuser study by Schachenmann (1974), showed the time averages to be the same for conditions in the boundary layer which varied dramatically with frequency. (The periodic velocity fluctuation in the boundary layer varied from 1 to 100% of the oscillation magnitude at the center of the diffuser, while the mean velocity in the boundary layer remained the same.) Thus, the observation that $\bar{U}(y)$ is the same as $U_m(y)$ has merit, but should not be used as a basis for describing the dynamics of the flow field itself.

Turbulence Structure: A variety of experiments have been performed to study the turbulence intensity in unsteady turbulent flow. Several of these show the turbulence structure unaffected by oscillation of the flow field. A study by Cousteix et al. (1977) demonstrates this conclusion. Figure 13 presents the measured turbulence intensity and Reynolds shear stress at various parts of a cycle of oscillation. Note that even though significant variations appear in these quantities, the ratio of the shear stress to its component turbulence intensities remains constant at a value equivalent to that of steady flow (Fig. 14). Thus, under certain conditions, steady flow turbulence models can be used to predict unsteady turbulent boundary-layer behavior. Indeed, several experiments have been accurately represented by conventional numerical techniques. These include Lu et al. (1973) for flow in a pipe, Johnson and Carlsen (1976) for purely oscillatory flow, Cousteix and his colleagues (1977, 1979) for both zero- and adverse-pressure gradient flows on a flat plate, and Parikh et al. (1981) for a time-varying adverse pressure gradient (predicted by Lyrio et al., 1981).

However, there are cases where substantial changes in the turbulence intensity can occur. As the frequency of oscillation is increased, a critical frequency can be reached at which there can be a significant interaction between the oscillatory motion and the turbulent structure. An example of this can be seen in work done by Mizushina et al. (1973) for fully developed flow in a pipe. For frequencies below this critical frequency, the ensemble-averaged turbulence intensity is very similar to the turbulence intensity that would appear at that particular point in the cycle for the corresponding steady velocity (Fig. 15). However, if the frequency of oscillation is

increased beyond a critical frequency, the situation is significantly altered. The turbulence intensity no longer has a pattern similar to that which would be associated with the steady flow (Fig. 15) and significant variations appear in the velocity distribution obtained from ensemble-averaging (Fig. 16). Mizushina et al. determined that the behavior was associated with a critical frequency related to turbulent bursts in the flow; this kind of behavior was also observed by Ramaprian and Tu (1980). This result is very important for those who wish to model turbulent unsteady flows. When these interactions occur, they can significantly change the structure of the turbulence, seriously compromising the validity of the model that is being used to predict the flow behavior.

Strong Interaction Effects: In many of the experiments that have been reviewed, unsteady viscous effects were present but did not cause any significant variation in the overall behavior of the flow field. However, when turbulent boundary layers near separation are exposed to oscillation, the situation can be dramatically altered. Under these conditions, significant global changes can occur in the boundary layer, resulting in major alteration of the shape factor and displacement thickness. A good example of this phenomenon is shown in Fig. 17, from Houdeville et al. (1976). Here the adverse pressure gradient has combined with oscillation to produce clearly defined changes in the evolution of displacement thickness. This variation in displacement thickness will be quite important if prediction of the coupled viscid-inviscid interaction is attempted.

Unsteady Flow Near the Wall: When an oscillating external velocity is imposed on a viscous flow, the flow near the wall responds quite readily to this unsteadiness. In many of the experiments that have been performed, the unsteady viscous reaction to the imposed flow variations is completely confined to the Stokes layer near the wall; the outer region of the boundary layer behaves as if it were "frozen." This is both a benefit and a problem. If the goal of the research is to predict the global flow behavior of an unsteady flow with well-defined initial and boundary conditions, the Stokes layer region can often be virtually ignored without serious detriment to the accuracy of the prediction (Lyrio et al., 1981).

However, there is a class of problems that depends strongly on the character of the Stokes layer. In many situations, no data other than wall shear stress and pressure distributions can be measured. In these cases, prediction of the boundary-layer behavior will directly depend on the ability to relate the wall shear stress to the flow in the central region of the boundary layer. The experimental studies that have emphasized study of the wall region show major phase changes near the wall (e.g., Simpson et al., 1980; Binder and Kueny, 1981). These measurements are extremely difficult to perform, and the results are limited. However, they clearly demonstrate that the flow behavior near the wall can vary dramatically during oscillation. Thus, future research should emphasize the near-wall region of unsteady turbulent boundary layers, matching the unsteady wall shear and Stokes layer behavior with the boundary-layer behavior that occurs away from the wall.

Amplitude and Frequency Effect: Low amplitude or low frequency does not necessarily mean quasisteady behavior. The values of amplitude and frequency used in selected experiments are shown in Fig. 18. There is obviously a wide range of values that can result in unsteady effects. It is quite probable that no single dimensionless factor can be chosen to represent all the effects of unsteadiness: there are different time scales for the wall region compared to the outer flow; the eddy structure changes rapidly in adverse pressure gradient; the flow responds to temporal variation in velocity differently than it does to spatial variations. In addition, many experiments contribute only a single point to Fig. 18. Various dimensionless parameters have been suggested (e.g., Strouhal number based on $x$, $\delta$, $\delta^*$, $L$, etc.). The results for one of these, $S_\delta = f\delta/U$, are shown in Fig. 19 for the same set of experiments as presented in Fig. 18 ($S_\delta$ is based on local velocity and boundary-layer thickness). The shaded region shows that there is a small range of amplitude and frequency for which no unsteady effects have been reported. As the frequency or the amplitude increases, unsteady effects appear in the outer region of the boundary layer, especially for adverse pressure gradient flows. Note that the data from the Parikh et al. (1981) experiment show outer flow effects for the low range of $S_\delta$, but only inner-layer variation at high $S_\delta$.

Another parameter that has been considered significant for determining the possibility of unsteady effects is the burst frequency. This burst frequency ($F_b$) has been developed from steady flow (Offen and Kline, 1973; Rao et al., 1971), and acts as an indicator of the frequency at which the turbulent eddy structure will respond to external forcing function. This value is defined as $F_b = U/5\delta$ for a flat plate; it has been modified in the present report to reflect changes in structure due to adverse pressure gradient (local values are used for $U$ and $\delta$, as measured at the downstream end of the test surface of the related experiments). Figure 20 presents the tested frequencies for some existing experiments compared to the corresponding burst frequencies.

Note that the zero pressure gradient flows show unsteady effects only near the wall (with the exception of Mizushina et al., 1973). Acharya and Reynolds (1975) found sublayer effects when oscillating at the burst frequency, but not at 60% $F_b$. On the other hand, Karlsson (1958) found the largest phase change to occur in the sublayer for frequencies less than 40% of $F_b$; Ramaprian and Tu (1980) found significant effects at only 27% of $F_b$; Mizushina et al. (1973) found a major change occurred across the full pipe flow for $F_{crit}$ less than 20% of $F_b$.

The adverse pressure gradient flows, even when related to a corrected burst frequency, all show unsteady effects for frequencies well below the burst frequency: Cousteix et al. (1979) at 28% $F_b$, Parikh et al. (1981) at 12% $F_b$, Simpson et al. (1980) at 6% $F_b$. Thus, for most of the experiments that have been reported, the unsteady effects have occurred at frequencies significantly lower than the burst frequency of the boundary-layer structure. This result is true whether in air or water, channel or boundary layer, zero or adverse pressure gradient. Again, the shaded region shows that there is only a relatively small range of oscillation amplitude and frequency for which unsteady effects are not detected.

Importance of Initial Conditions: Most of the unsteady turbulent boundary-layer experiments that have been performed suffer from a lack of sufficient data to accurately determine the flow development along the surface being studied. Experiments in unsteady transition show major effects of oscillation on the development of the resultant turbulent boundary layer. However, in many of the recorded unsteady turbulent boundary-layer experiments, measurements were made at only one $x$ location; in others no trip was used

at the start of the test surface. Without data measured at other x stations, the task of isolating local unsteady viscous effects from upstream history is very difficult, if not impossible. Therefore, future experiments should document the character of the flow at several stations. This requirement should also be applied to supposedly "fully developed" flows such as those in pipes; without such documentation, the true contribution of the unsteady viscous effects cannot be isolated.

## Concluding Remarks and Recommendations

1. Existing experiments on unsteady turbulent boundary layers have been reviewed and documented. These include flat plate, diffuser, pipe, airfoil, and cascade flows; 27 experiments containing instantaneous data and 12 more containing time-averaged data have been identified.

2. The experiments that provide instantaneous boundary-layer measurements are described in detail in an AGARDograph (Carr, 1981). This AGARDograph contains all the digital data presently available for these experiments. However, many of the experimental results no longer exist in digital form.

3. There are certain trends which can be determined based on the existing experiments.

(a) The time-averaged mean velocity profile is almost always the same as the velocity profile that would occur in a steady flow having an equivalent mean external flow velocity. However, even though these mean profiles are the same, there may be strong local unsteady viscous flow effects present.

(b) In many cases, the turbulent structure in the oscillating flow is not changed from the equivalent steady-state counterpart.

(c) The unsteady effects are often confined to a thin layer near the wall, while the outer region of the boundary layer is not strongly affected.

(d) Several experiments have been accurately predicted using conventional turbulence models.

(e) When existing data are plotted using the dimensionless frequency, $S_\delta$, quasisteady results occur for only a small range of amplitude or frequency.

(f) Unsteady effects occur even when the imposed oscillation frequency is significantly lower than the local turbulence burst frequency, especially in adverse pressure gradient flow.

4. The following recommendations are offered:

(a) Any future experiments studying unsteady turbulent boundary-layer behavior should document the results in digital form, using the format outlined in the present paper.

(b) Documentation of the initial condition of the boundary layer at upstream stations is required. This information may be as important as the results obtained at the nominal test position, even for "fully developed" flows. Unless information about the character of the flow at these earlier stations is recorded, the effects of unsteadiness are very difficult to separate from the effects of upstream history.

(c) Experimental studies of the flow near the wall in unsteady turbulent boundary layers must be emphasized since, in many applications, no information will be available except for the wall values. The ability of a technique to correlate these wall values with the rest of the boundary layer will be a major test of proposed computational schemes.

## References


1. Acharya, M.; Reynolds, W. C.: Measurements and prediction of a fully developed turbulent channel flow with imposed controlled oscillations. Rept. TF-8, Mechanical Engineering Dept., Stanford Univ., Stanford, Calif., May 1975.

2. Banner, M. L.; Melville, W. K.: On the separation of air flow over waves. J. Fluid Mech. 77 (1976) 825-842.

3. Binder, G.; Kueny, J. L.: Measurement of the periodic velocity oscillations near the wall in unsteady turbulent boundary layers. Presented at the IUTAM Symposium on Unsteady Shear Flows, Toulouse, France, May 1981.

4. Brembati, F.: An investigation of an unsteady turbulent boundary layer. Project Report 1975-17, Von Karman Inst. of Fluid Dynamics, Rhode Saint Genese, Belgium, June 1975.

5. Brown, F. T.; Margolis, D. L.; Shah, R. P.: Small-amplitude frequency behavior of fluid lines with turbulent flow. J. Basic E., 91D (Dec. 1969) 678-693.

6. Carr, L. W.: A compilation of unsteady turbulent boundary layer data, AGARDograph AG265 (in print) 1981.

7. Carr, L. W.; McAlister, K. W.; McCroskey, W. J.: Analysis of the development of dynamic stall based on oscillating airfoil experiments. NASA TN D-8382 (1977).

8. Charnay, G.; Melinand, J. P.: Investigation of the intermittent region of steady or unsteady turbulent boundary layer. Presented at Eurovisc 77 — Unsteady Turbulent Boundary Layers and Shear Flows, Toulouse, France, Jan. 1977.

9. Cousteix, J.; Desopper, A.; Houdeville, R.: Recherches sur les couches limits turbulentes instationaires (in French) (Research on Unsteady Turbulent Boundary Layers). ONERA/DERAT TP 1976-147, Toulouse, France, 1976.

10. Cousteix, J.; Desopper, A.; Houdeville, R.: Investigation of the structure and of the development of a turbulent boundary layer in an oscillating external flow. Presented at Symposium on Turbulent Shear Flows, Pennsylvania State Univ., University Park, Pa., April 1977 (Also ONERA TP N1977-14).

11. Cousteix, J.; Houdeville, R.; Raynaud, M.: Oscillating turbulent boundary layer with strong mean pressure gradient. Presented at 2nd Symposium on Turbulent Shear Flows, Imperial College, London, 1979 (Also ONERA TP 1979-89).

12. Cousteix, J.; Houdeville, R.; Javelle, J.: Experiments on an oscillating turbulent boundary layer with and without pressure gradient. Presented at IUTAM Symposium on Unsteady Turbulent Shear Flows, Toulouse, France, May 1981.

13. DeRuyk, J.; Hirsch, C.: Turbulence structure in unsteady boundary layers and wakes on an oscillating airfoil. Dept. of Fluid Mech., Vrije Universiteit Brussel, Brussels, Belgium, 1981.

14. Ehrensberger, M.: Experiments in unsteady separating boundary layers. Presented at Euromech 135 — Unsteady Separation and Reversed Flow in External Fluid Dynamics, Marseilles, France, Oct. 1980.

15. Evans, R. L.: Boundary layer development on an axial-flow compressor stator blade. Trans. ASME, J. of Eng. for Power, 100, 2 (1978) 287-293.

16. Foresman, J. L.: Turbulent boundary layer separation characteristics with blowing in an oscillating flow. M.S. Thesis, Naval Postgraduate School, Monterey, Calif., Sept. 1974.

17. Gerrard, J. H.: An experimental investigation of pulsating turbulent water flow in a tube. J. Fluid Mech. 46, 1 (1971) 43-64.

18. Gostelow, J. P.: A new approach to the experimental study of turbomachinery flow phenomena. ASME Paper 76-GT-47. Presented at the ASME Gas Turbines Conference and Products Show, New Orleans, La., March 1976.

19. Ho, C. M.; Chen, S. H.: Unsteady wake of a plunging airfoil. AIAA Paper 80-1446, 1980.

20. Houdeville, R.; Cousteix, J.: Turbulent boundary layers in oscillating flow with a mean adverse pressure gradient. Presented at 15th AAAF Applied Aerodynamics Colloquium, Marseilles, France, Nov. 1978.

21. Houdeville, R.; Desopper, A.; Cousteix, J.: Experimental analysis of average and turbulent characteristics of an oscillatory boundary layer. ONERA TP 1976-30, 1976 (Also Rsch. Aerosp. 1976-4).

22. Hussain, A. K. M. F.; Reynolds, W. C.: The mechanics of an organized wave in turbulent shear flow — part 2, experimental results. J. Fluid Mech. 54 (1972) 241-261.

23. Jacobs, G. K.: Intensity distribution in the oscillating turbulent boundary layer on a flat plate. M.S. Thesis, Naval Postgraduate School, Monterey, Calif., March 1968.

24. Jonnson, I. G.; Carlsen, N. A.: Experimental and theoretical investigations in an oscillatory boundary layer. J. Hydraulic Res. 14, 1 (1976) 45-60.

25. Karlsson, S. K. F.: An unsteady turbulent boundary layer. Ph.D. Thesis, Johns Hopkins Univ., Baltimore, Md., 1958.

26. Kendall, J. M.: The turbulent boundary layer over a wall with progressive surface waves. J. Fluid Mech. 41, 2 (1970) 259-281.

27. Kenison, R. C.: Measurements of a separating turbulent boundary layer with an oscillating free stream. Ph.D. Thesis, Queen Mary College, Univ. of London, England, 1977.

28. Kita, Y.; Hirose, K.; Adachi, Y.: Periodically oscillating turbulent flow in a pipe. Trans. Japanese Soc. of Mech. Eng., Bull. 23 (May 1980) 656-664.

29. Kobashi, Y.; Hayakawa, M.: Structure of a turbulent boundary layer on an oscillating flat plate. IUTAM Sympsoium on Unsteady Turbulent Shear Flows, Toulouse, France, May 1981.

30. Lu, S. Z.; Nunge, R. J.; Erian, F. F.; Mohajery, M.: Measurements of pulsating turbulent water flow in a pipe. Proceedings of 3rd Symposium on Turbulence in Liquids, Univ. of Missouri, Rolla, Mo. (1973) 375-392.

31. Lyrio, A. A.; Ferziger, J. H.; Kline, S. J.: An integral method for the computation of steady and unsteady turbulent boundary layer flows, including the transitory stall regime in diffusers. Dept. of Mech. Eng., Stanford Univ. Rept. ME-PD23, Stanford, California, May 1981.

32. Mainardi, H.; Panday, P. K.: A study of turbulent pulsating flow in a circular pipe. Eurovisc 77 — Unsteady Turbulent Boundary Layers and Shear Flows, Toulouse, France, Jan. 1977.

33. Marvin, J. G.; Levy, L. L.; Seegmiller, H. L.: On turbulence modeling for transonic flows. AIAA Paper 79-0071, New Orleans, La., Jan. 1979.

34. Miller, J.: Heat transfer in the oscillating boundary layer. Trans. of ASME, J. of Eng. for Power, 91 (Oct. 1969) 239-244.

35. Mizushina, T.; Maruyama, T.; Hirasawa, H.: Structure of the turbulence in pulsating pipe flows. J. Chem. Eng. Japan, 8, 3 (1975).

36. Mizushina, T.; Maruyama, T.; Shiozaki, Y.: Pulsating turbulent flow in a tube. J. Chem. Eng. Japan, 6, 6 (1973).

37. Morrissey, J. E.: The effect of large amplitude flow oscillations on turbulent forced-convection heat transfer from a flat plate. M.S. Thesis, Naval Postgraduate School, Monterey, California, 1967.

38. Norris, H. L.; Reynolds, W. C.: Turbulent channel flow with a moving wavy boundary. Report TF-7, Dept. of Mech. Eng., Stanford Univ., Stanford, California, 1975.

39. Offen, G. R.; Kline, S. J.: Experiments on the velocity characteristics of "bursts" and on the interactions between the inner and outer regions of a turbulent boundary layer. Rept. MD-31, Mech. Eng. Dept., Stanford Univ., Stanford, California, 1973.

40. Ohmi, M.; Usui, T.; Tanaka, O.; Toyama, M.: Pressure and velocity distributions in pulsating turbulent pipe flow, Part 2: Experimental investigations. Trans. JSME 41, 349 (Dec. 1974) 2632-2641 (in Japanese). Also Bulletin JSME 19, 134 (Aug. 1976) 951-957 (in English).

41. Ostrowski, J.; Wojciechowski, J.: The generation of a turbulent boundary layer in unsteady flow. Presented at Symposium on Turbulence, Berlin, W. Germany, 1977. Published as Structure and Mechanism of Turbulence, Springer-Verlag.

42. Parikh, P. G.; Reynolds, W. C.; Jayaraman, R.: On the behavior of an unsteady turbulent boundary layer. In, Numerical and Physical Aspects of Aerodynamic Flows. Cebeci, T. (ed.), Univ. of Calif. at Long Beach, Long Beach, Calif., Jan 1981.

43. Patel, M. H.: On turbulent boundary layers in oscillatory flow. Proc. Roy. Soc. (London) A353 (1977) 121-144.

44. Pericleous, K. A.: An oscillatory turbulent boundary layer in an adverse pressure gradient. Ph.D. Thesis, Queen Mary College, Univ. of London, England, 1977.

45. Pittaluga, F.: Oscillatory flow phenomena in diffusers in the turbulent regime. Mech. Res. Comm. 2, 5-6 (1975) 283-288.

46. Rakowsky, E. L.: The effect of freestream oscillations on the incompressible turbulent boundary layer on a flat plate with pressure gradient. Ph.D. Thesis, Stevens Inst. of Tech., Hoboken, N.J., 1966.

47. Ramaprian, B. R.; Tu, S. W.: Periodic turbulent pipe flow at high frequencies of oscillation. Presented at IUTAM Symposium on Unsteady Turbulent Shear Flows, Toulouse, France, May 1981.

48. Ramaprian, B. R.; Tu, S. E.: An experimental study of oscillatory pipe flow at transitional Reynolds numbers. J. Fluid Mech. 100, 3 (1980) 513-544.

49. Rao, K. N.; Narasimha, R.; Badri Narayanan, M. A.: The bursting phenomenon in a turbulent boundary layer. J. Fluid Mech. 48, 2 (1971) 339-352.

50. Reynolds, W. C.; Parikh, P. G.; Jayaraman, R.; Carr, L. W.: Dynamic behavior of an unsteady turbulent boundary layer. Presented at IUTAM Symposium on Unsteady Turbulent Shear Flows, Toulouse, France, May 1981.

51. Richter, K.; Ronneberger, D.: Turbulence modulated by a coherent shear wave in a wall boundary layer. Presented at IUTAM Symposium on Unsteady Turbulent Shear Flows, Toulouse, France, May 1981.

52. Ronneberger, D.; Ahrens, C. D.: Wall shear stress caused by small amplitude perturbations of turbulent boundary layer flow: An experimental investigation. J. Fluid Mech. 83, 3 (Dec. 1977) 433-464.

53. Saxena, L. S.: An experimental investigation of oscillating flows over an airfoil. Ph.D. Thesis, Illinois Inst. of Tech., Chicago, Ill., May 1977.

54. Schachenmann, A. A.: Oscillating turbulent flow in a conical diffuser. Ph.D. Thesis, Lehigh Univ., Bethlehem, Pa., 1974.

55. Schultz-Grunow, F.: Pulsierender durchfluss durch rohre. Forschung 11, 4 (1940) 170-187. Translated as "Pulsation flow through pipes." NASA Technical Translation, NASA-TT-F-14881, 1973.

56. Simpson, R. L.; Chew, Y. T.; Shivaprasad, B. G.: Measurements of unsteady turbulent boundary layers with pressure gradients. Final Report. U.S. Army Research Office Grant DAAG29-76-G-0187. Also SMU Rept. WT-6, Southern Methodist Univ., Dallas, Tex., Aug. 1980.

57. Simpson, R. L.; Shivaprasad, B. G.; Chew, Y. T.: Some important features of unsteady separating turbulent boundary layers. Presented at IUTAM Symposium on Unsteady Turbulent Shear Flows, Toulouse, France, May 5-8, 1981.

58. Simpson, R. L.; Sallas, J. J.; Nasburg, R. E.: Tailoring the waveform of a periodic flow with a programmable damper, J. Fluids Eng. 100 (1978) 287-290.

59. Stenning, A. H.; Schachenmann, A. A.: Oscillatory flow phenomena in diffusers at low Reynolds numbers. Trans. ASME, J. Fluids Eng. (Sept. 1973) 401-407.

60. Thomas, L. C.; Shukla, R. K.: Theoretical and experimental study of wall region periodicity for turbulent pulsatile flow. Trans. ASME, J. Fluids Eng. 98 (March 1976) 27-32.

61. Tomsho, M. E.: The oscillating turbulent boundary layer in a conical diffuser. Ph.D. Thesis, Lehigh Univ., Bethlehem, Pa., 1978.

62. Weinstein, L. M.: Effect of driven-wall motion on a turbulent boundary layer. Presented at IUTAM Symposium on Unsteady Turbulent Shear Flows, Toulouse, France, May 5-8, 1981.

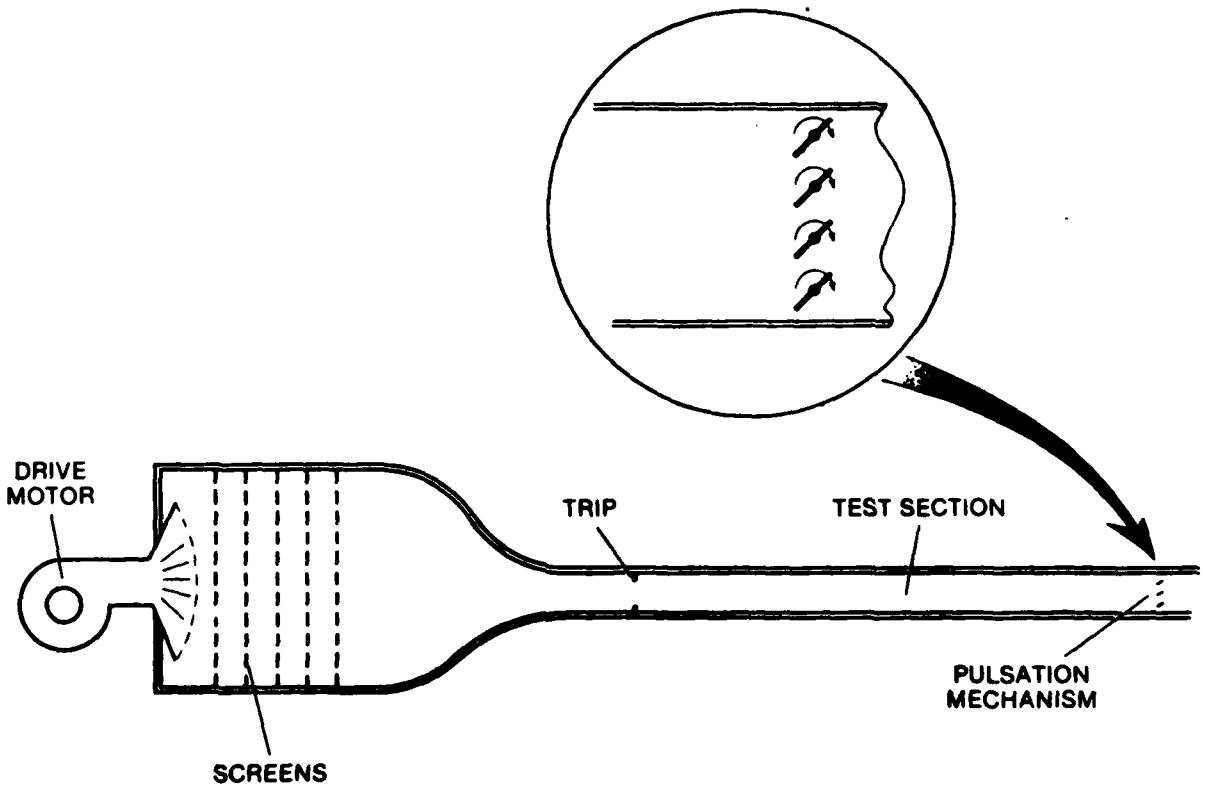


Fig. 1. Oscillating flow facility — variable blockage, from Karlsson

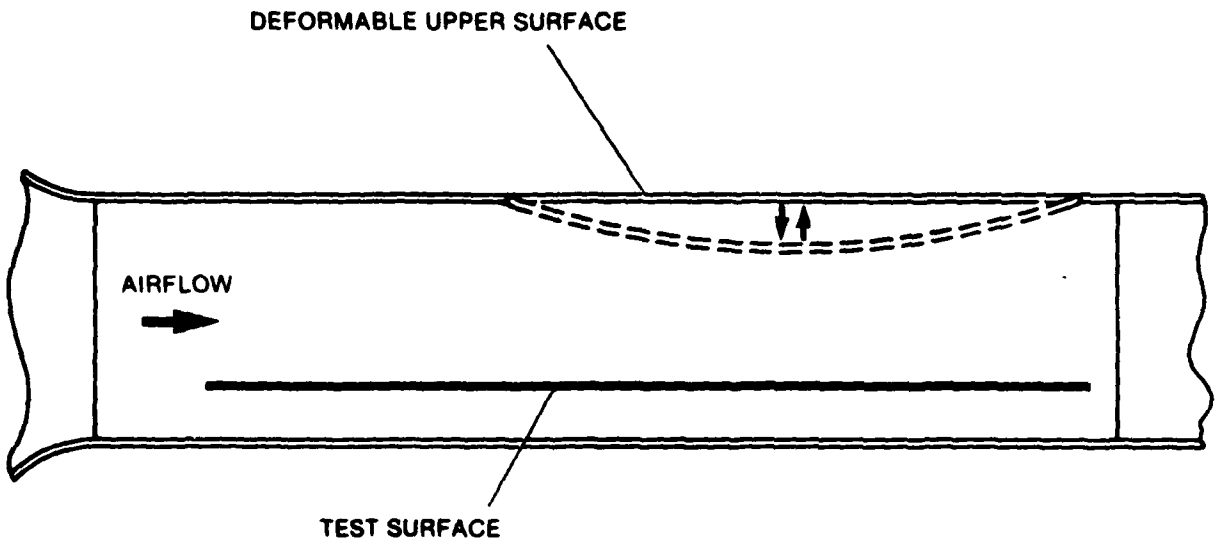


Fig. 2. Oscillating flow facility — deformable wall, from Brembati

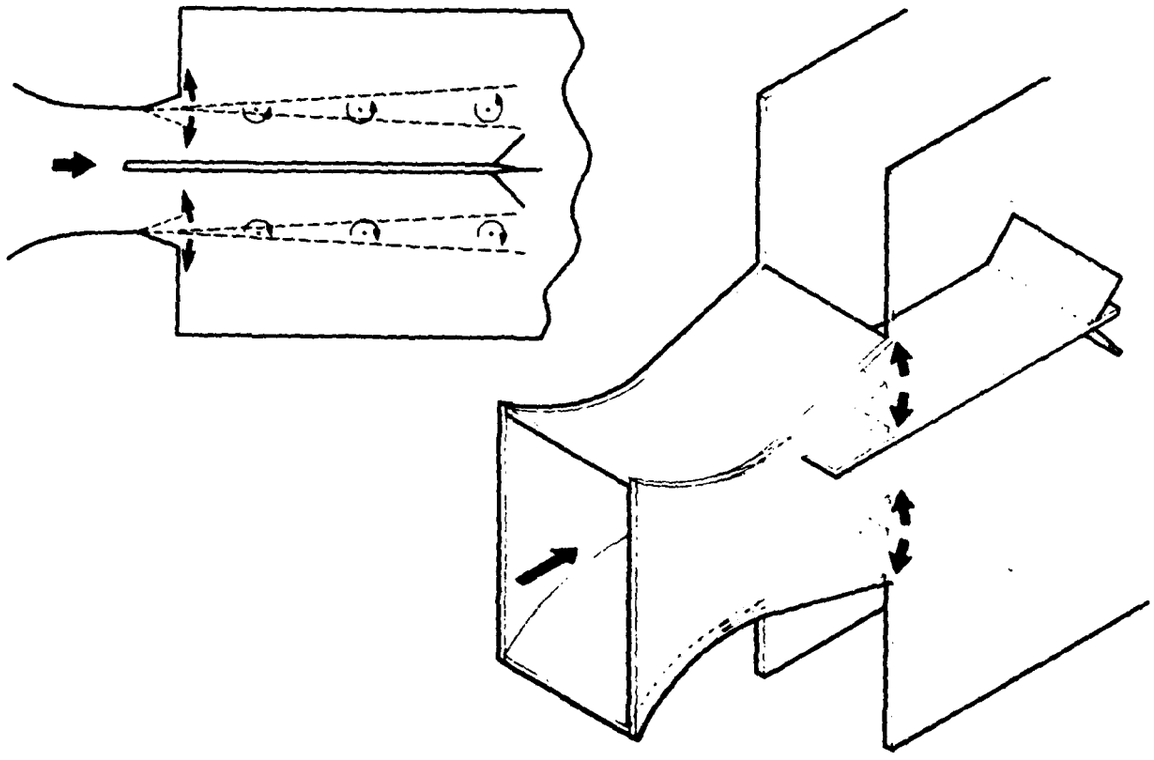

Fig. 3. Oscillating flow facility — vortex-induced motion, from Kenison

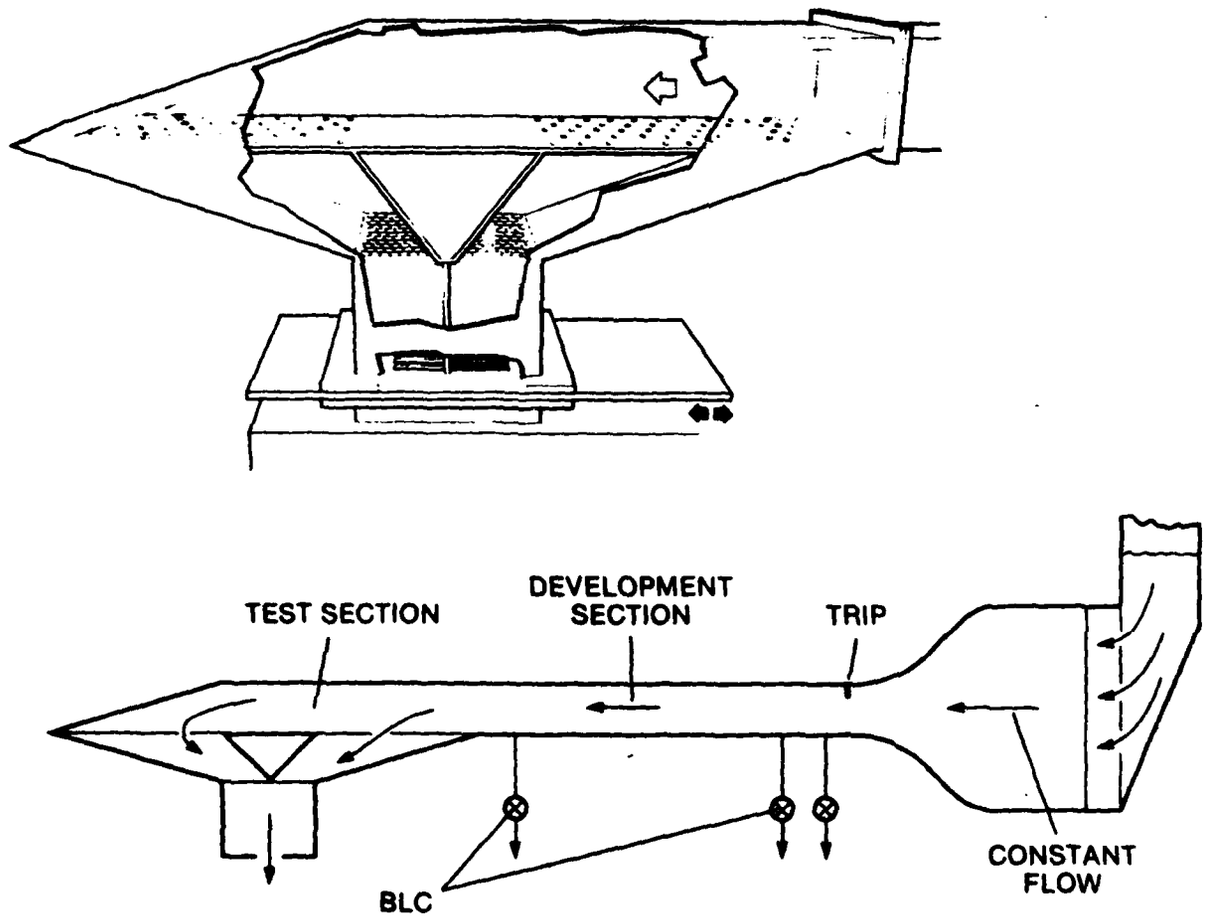


Fig. 4. Oscillating flow facility — steady incoming flow, from Parikh et al.

| dP/dx = 0 | dP/dx > 0 | SEPARATION |
|---|---|---|
| **ACHARYA & REYNOLDS*** | **BREMBATI*** | BANNER & MELVILLE |
| **BINDER & KUENY** | **COUSTEIX et al. (1979)*** | **COUSTEIX et al. (1979)*** |
| **COUSTEIX et al. (1976)*** | FORESMAN | **KENISON** |
| **COUSTEIX et al. (1977)*** | **KENISON** | **SIMPSON et al. (1980)*** |
| CHARNAY & MELINAND | **OSTROWSKI & WOJCIECHOWSKI** | |
| HUSSAIN & REYNOLDS | **PARIKH et al.*** | |
| JACOBS | **PERICLEOUS*** | |
| **JONNSON & CARLSEN*** | PITTALUGA | |
| **KARLSSON*** | RAKOWSKY | |
| **KENDALL** | **SCHACHENMANN** | |
| MILLER | **SIMPSON et al. (1980)*** | |
| MORRISSEY | STENNING & SCHACHENMANN | |
| NORRIS & REYNOLDS | THOMAS & SHUKLA | |
| **PATEL*** | **TOMSHO*** | |
| RONNEBERGER & AHRENS | | |

Fig. 5. Existing unsteady turbulent boundary-layer experiments. Bold type indicates experiments that are reviewed in detail in AGARDograph. Asterisk ( )* indicates that digital data are available on magnetic tape

| PIPE | AIRFOILS & CASCADES | NEW EXPERIMENTS |
|---|---|---|
| BROWN et al. | CARR, McALISTER & McCROSKEY | COUSTEIX et al. (1981) |
| GERRARD | **EVANS** | DE RUYCK & HIRSCH |
| KITA et al. | GOSTELOW | EHERENSBERGER |
| **LU et al.** | HO & CHEN | KOBASHI & HAYAKAWA |
| MAINARDI & PANDAY | **MARVIN et al.*** | LORBER & COVERT |
| **MIZUSHINA et al. (1973)** | **SAXENA** | RAMAPRIAN & TU (1981) |
| **MIZUSHINA et al. (1975)** | | REYNOLDS et al. |
| **OHMI et al.** | | RICHTER & RONNEBERGER |
| **RAMAPRIAN & TU (1980)*** | | SIMPSON et al. (1981) |
| SCHULTZ-GRUNOW | | WEINSTEIN |

**Fig. 6. Additional unsteady viscous flow experiments. Bold type indicates experiments that are reviewed in detail in AGARDograph. Asterisk ( )* indicates that digital data are available on magnetic tape**

| EXPERIMENT | DATA |
|---|---|
| FLOW TYPE | MEASUREMENT TECHNIQUE |
| PRIMARY REFERENCE | DATA REDUCTION TECHNIQUE |
| PRINCIPAL INVESTIGATOR | NOMINAL TEST CONDITIONS |
| FACILITY | AVAILABILITY OF DATA |
| LOCATION | GRAPHIC DATA PRESENTED IN REPORT(S) |
| APPARATUS | DATA ON MAGNETIC TAPE |
| TEST SECTION | COMMENTS BY ORIGINAL AUTHORS |
| OSCILLATION MECHANISM | COMMENTS BY LWC |
| PRESSURE GRADIENT MECHANISM | NUMBER OF CARD IMAGES ON TAPE |
| MEASUREMENT SURFACE | PERTINENT REFERENCES |
| TRIP | |
| WALL BOUNDARY LAYER CONTROL | |
| NATURAL FREQUENCY | |
| MAXIMUM WALL DEFLECTION | |
| POSITIONAL ACCURACY | |
| FREE STREAM TURBULENCE | |
| VERIFICATION OF TWO-DIMENSIONALITY | |
| MEASUREMENT ACCURACY | |

Fig. 7. Standard format for review of experiments

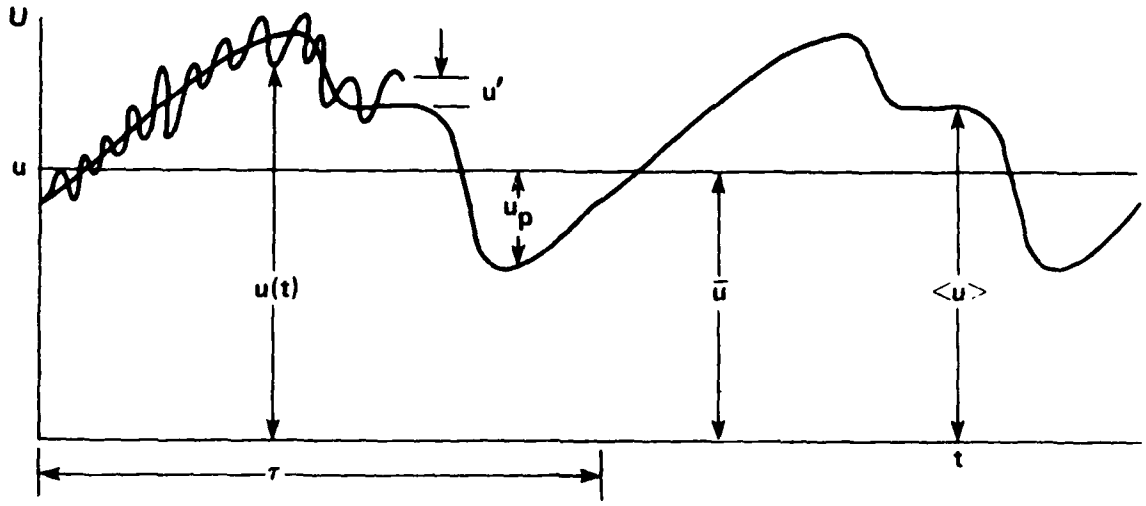


| | | |
|---|---|---|
| u(t) | – INSTANTANEOUS MEASURED VELOCITY | $u(t) = \bar{u} + u_p + u'$ |
| $\bar{u}$ | – TIME AVERAGED MEAN VELOCITY | $\bar{u} = \frac{1}{T}\int_0^T u(t)dt$ |
| <u> | – ENSEMBLE AVERAGED VELOCITY | $\langle u(t)\rangle = \frac{1}{N}\sum_{n=0}^{N} u(t + n\tau)$ |
| $u_p$ | – PERIODIC COMPONENT OF VELOCITY | $u_p(t) = \langle u(t)\rangle - \bar{u}$ |
| $u'$ | – RANDOM FLUCTUATIONS OF VELOCITY | $u'(t) = u(t) - \langle u(t)\rangle$ |

Fig. 8. Analysis of unsteady turbulent velocity signal

| I | | II |
|---|---|---|
| $\bar{u}$ | $\overline{u'^2}$ | $u_p(A;o)$ |
| **ACHARYA & REYNOLDS** | **ACHARYA & REYNOLDS** | **ACHARYA & REYNOLDS** |
| BREMBATI | COUSTEIX et al. (1976) | **BINDER & KUENY** |
| **COUSTEIX et al. (1976)** | COUSTEIX et al. (1977) | **COUSTEIX et al. (1976)** |
| **COUSTEIX et al. (1977)** | COUSTEIX et al. (1979) | **COUSTEIX et al. (1977)** |
| **COUSTEIX et al. (1979)** | **JACOBS** | **COUSTEIX et al. (1979)** |
| **EVANS** | **KARLSSON** | EVANS |
| **JACOBS** | KENDALL | **HUSSAIN & REYNOLDS** |
| JONNSON & CARLSEN | MIZUSHINA et al. (1973) | **KARLSSON** |
| **KARLSSON** | MIZUSHINA et al. (1975) | **KENISON** |
| **KENDALL** | **PARIKH et al.** | JONNSON & CARLSEN |
| **KENISON** | **PATEL** | KENDALL |
| **LU, et al.** | **PERICLEOUS** | **LU et al.** |
| **MILLER** | RAMAPRIAN & TU (1980) | MIZUSHINA et al. (1973) |
| MIZUSHINA et al. (1973) | **SCHACHENMANN** | MIZUSHINA et al. (1975) |
| MIZUSHINA et al. (1975) | **STENNING & SCHACHENMANN** | **OHMI et al.** |
| **OHMI et al.** | | **PATEL** |
| **PARIKH et al.** | | **PERICLEOUS** |
| **PATEL** | | RAMAPRIAN & TU (1980) |
| **RAMAPRIAN & TU (1980)** | | **SIMPSON et al. (1980)** |
| **SCHACHENMANN** | | **TOMSHO** |
| SIMPSON et al. (1980) | | |
| **STENNING & SCHACHENMANN** | | |
| TOMSHO | | |

**Fig. 9. Summary of available unsteady turbulent boundary layer data — levels I and II (Bold type indicates data that are available directly from reports; light type indicates data that can be reconstructed from the published data)**

| III | | IV |
|---|---|---|
| $\langle u \rangle$ | $\langle u'^2 \rangle$ | $\langle u'v' \rangle$ |
| **BREMBATI** | **BREMBATI** | **COUSTEIX et al. (1977)** |
| **COUSTEIX et al. (1976)** | **COUSTEIX et al. (1977)** | **COUSTEIX et al. (1979)** |
| **COUSTEIX et al. (1977)** | **COUSTEIX et al. (1979)** | **KENDALL** |
| **COUSTEIX et al. (1979)** | **KENDALL** | **MIZUSHINA et al. (1975)** |
| **EVANS** | **MIZUSHINA et al. (1973)** | **RAMAPRIAN & TU (1980)** |
| **GOSTELOW** | **MIZUSHINA et al. (1975)** | **SIMPSON et al. (1980)** |
| **JONNSON & CARLSEN** | **RAMAPRIAN & TU (1980)** | |
| **KENDALL** | **SIMPSON et al. (1980)** | |
| **MIZUSHINA et al. (1973)** | | |
| **MIZUSHINA et al. (1975)** | | |
| **OHMI et al.** | | |
| **OSTROWSKI & WOJCIECHOWSKI** | | |
| **RAMAPRIAN & TU (1980)** | | |
| **SAXENA** | | |
| **SIMPSON et al. (1980)** | | |
| **TOMSHO** | | |

Fig. 10. Summary of available unsteady turbulent boundary layer data — levels III and IV (Bold type indicates data that are available directly from reports; light type indicates data that can be reconstructed from the published data)

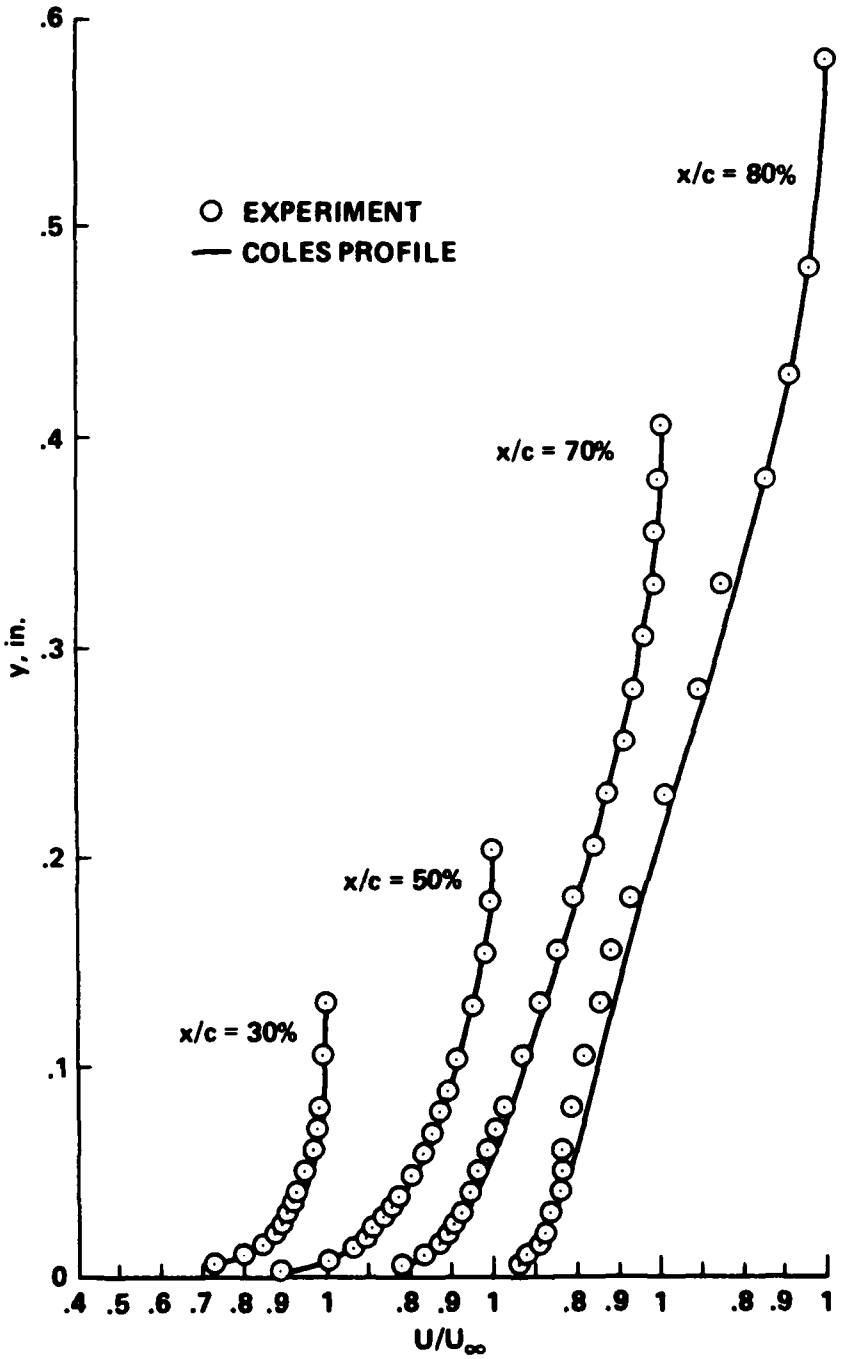


Fig. 11. Time-averaged mean profiles — from Evans

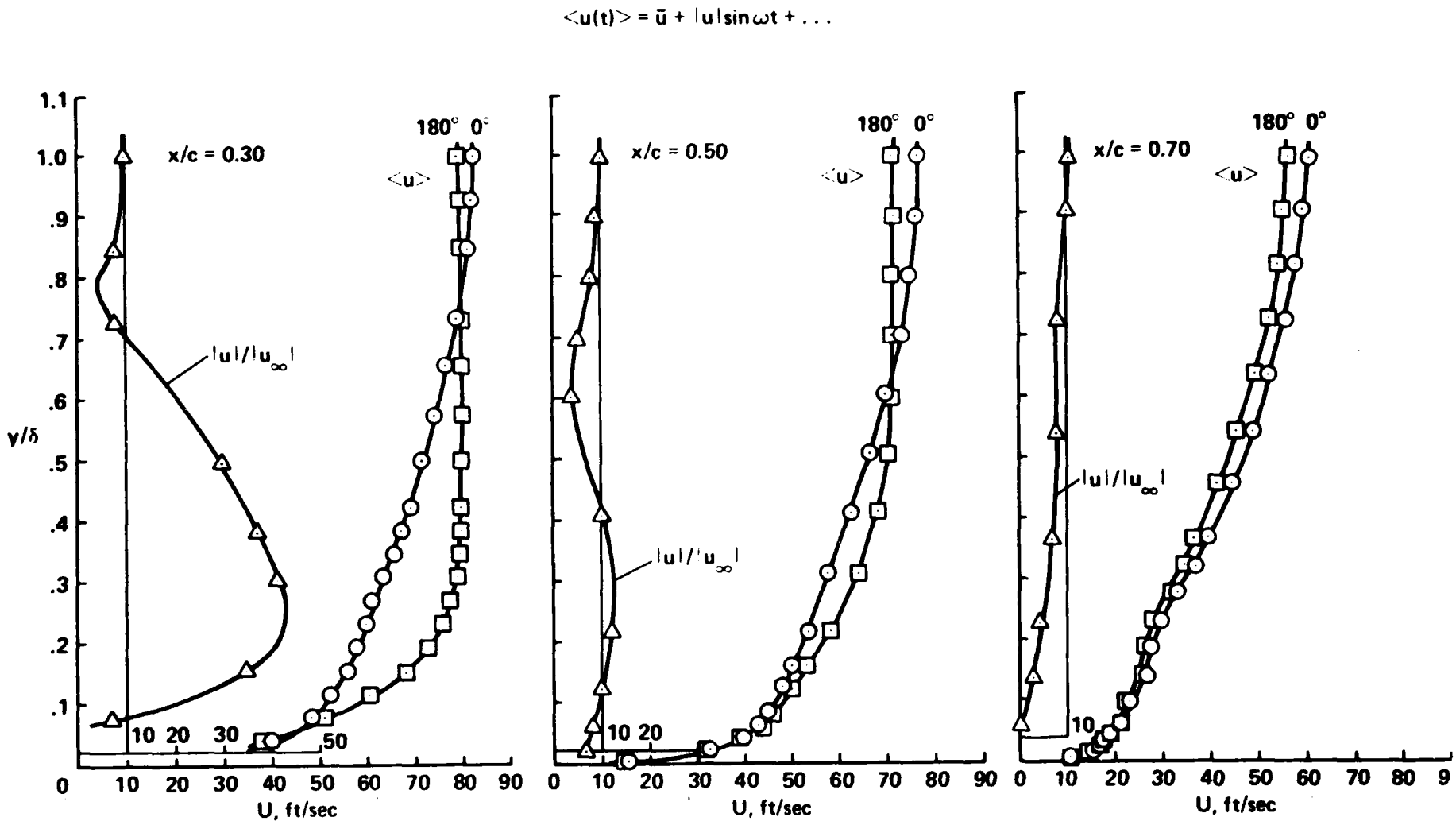


Fig. 12. Ensemble-averaged velocity profiles from Evans

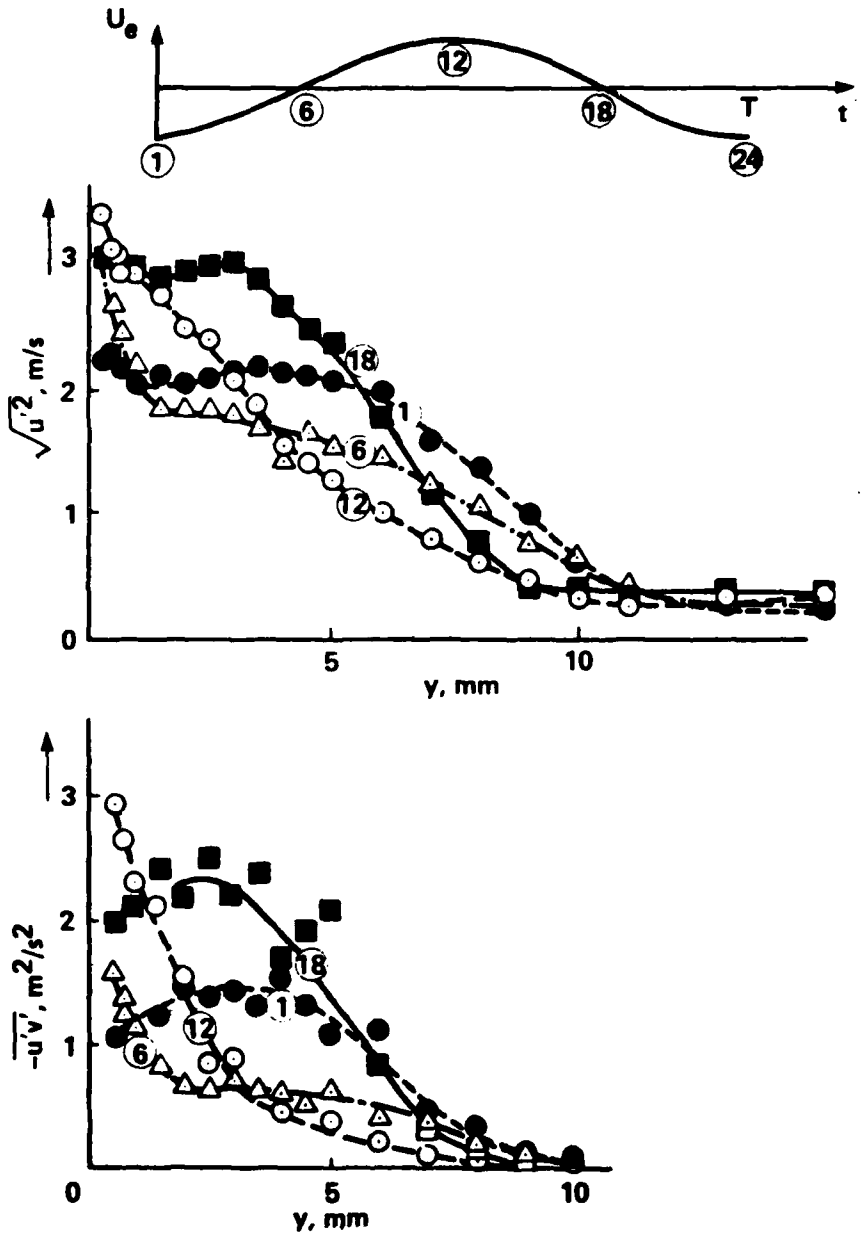


Fig. 13. Profiles of turbulence intensity and Reynolds shear stress — from Cousteix et al. (1977)

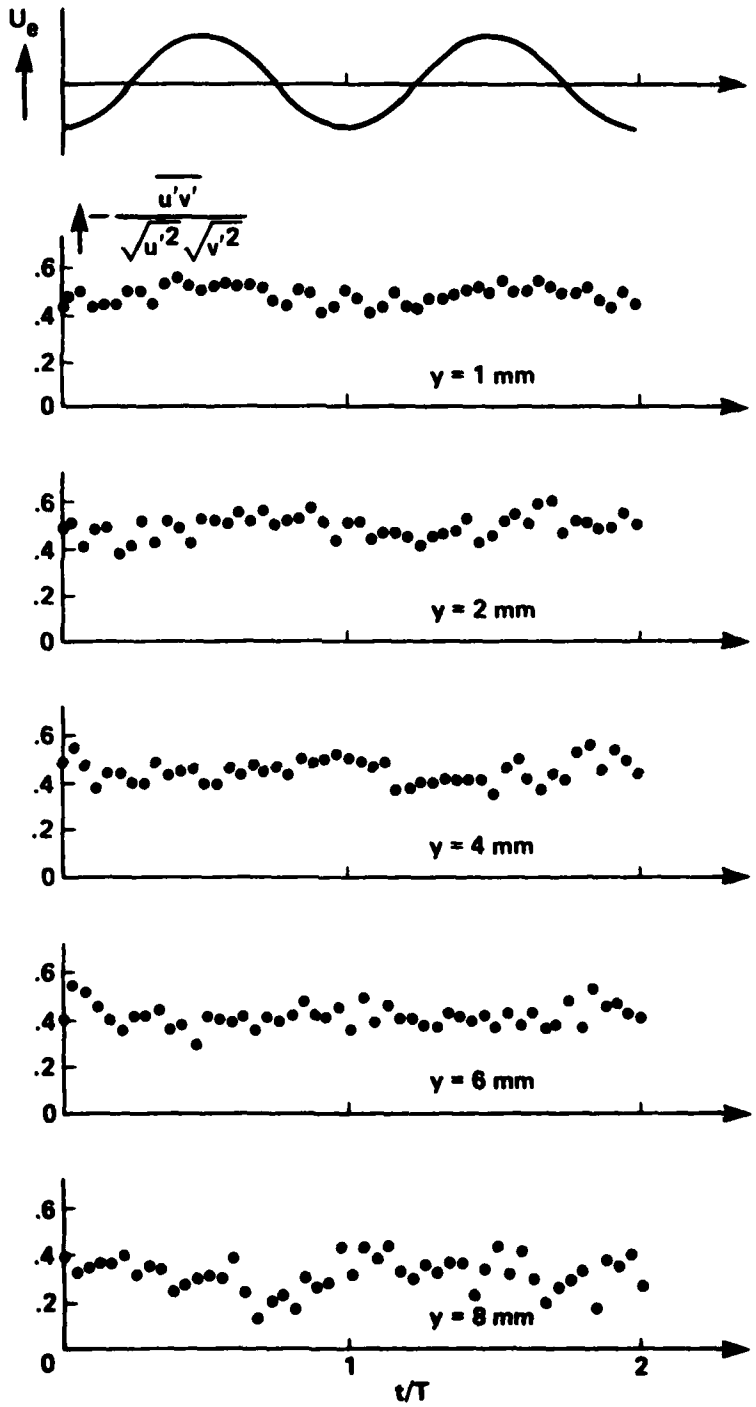


Fig. 14. Statistical distribution of velocity fluctuation — from Cousteix et al. (1977)

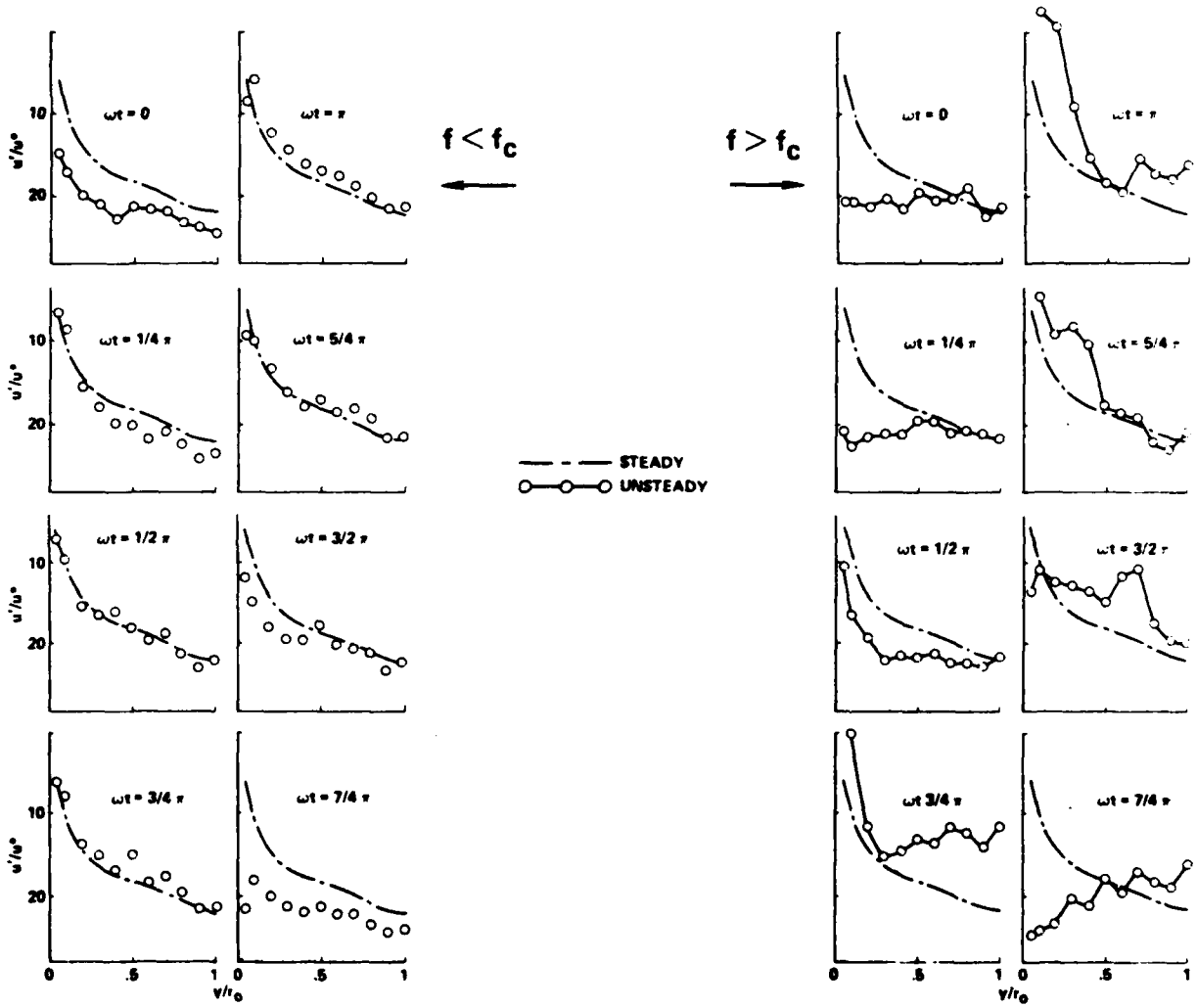


Fig. 15. Effect of frequency on turbulence intensity — from Mizushina et al. (1973)

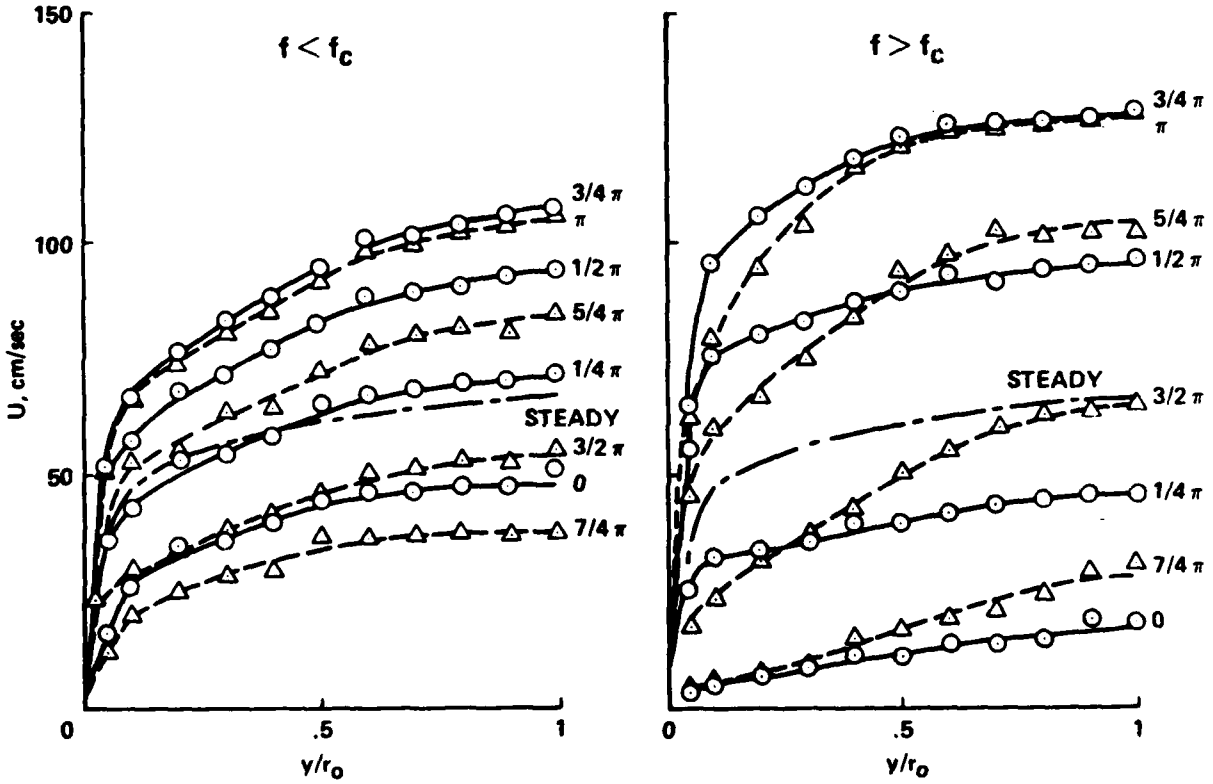


Fig. 16. Effect of frequency on instantaneous velocity — from Mizushina et al. (1973)

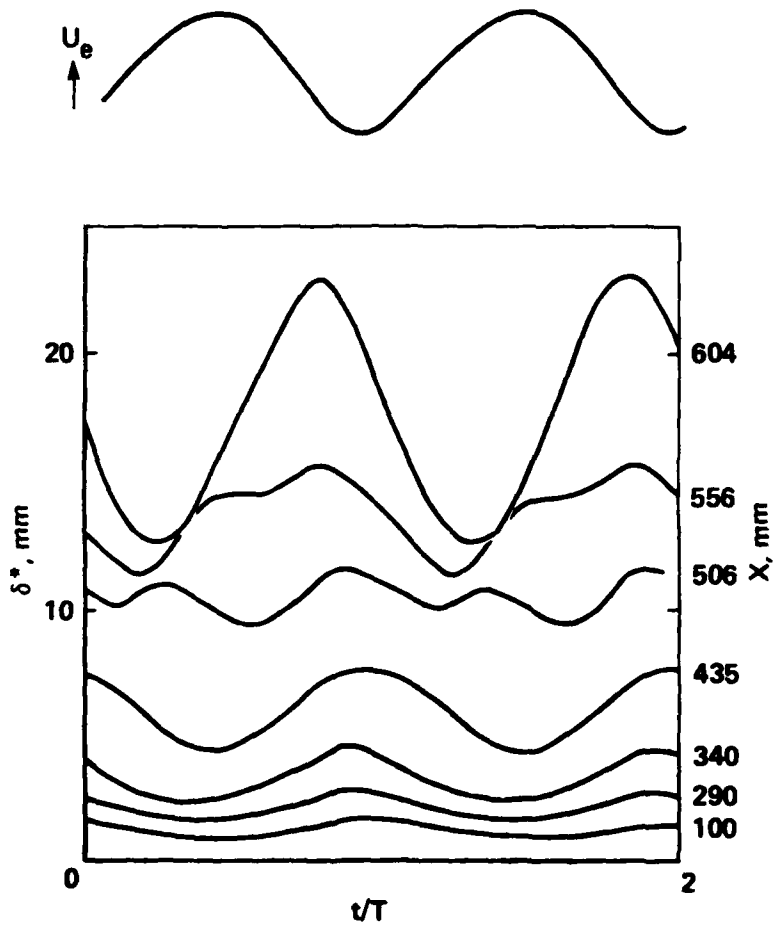


Fig. 17. Variation of δ* in adverse pressure gradient — from Houdeville and Cousteix (1978)

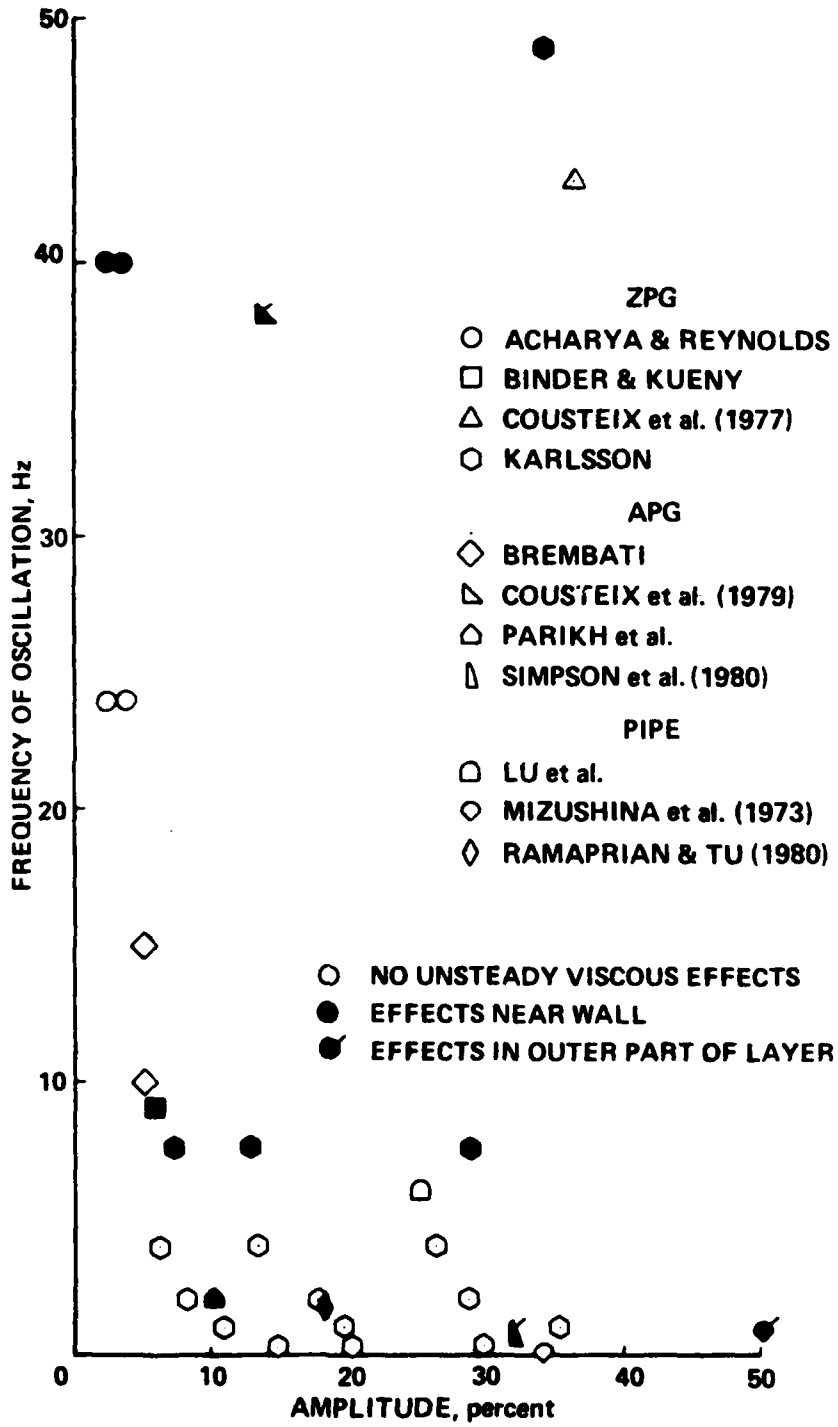


Fig. 18. Values of amplitude and frequency used in selected experiments

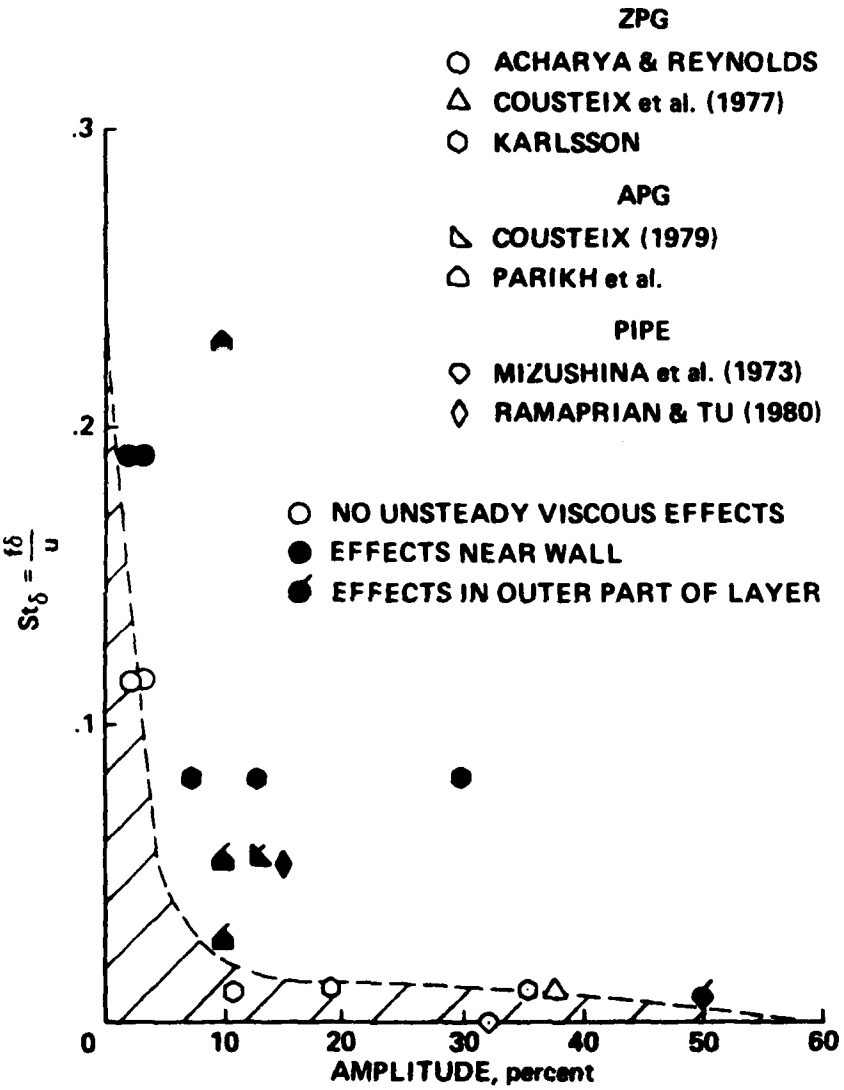


Fig. 19. Strouhal number and amplitude for selected experiments

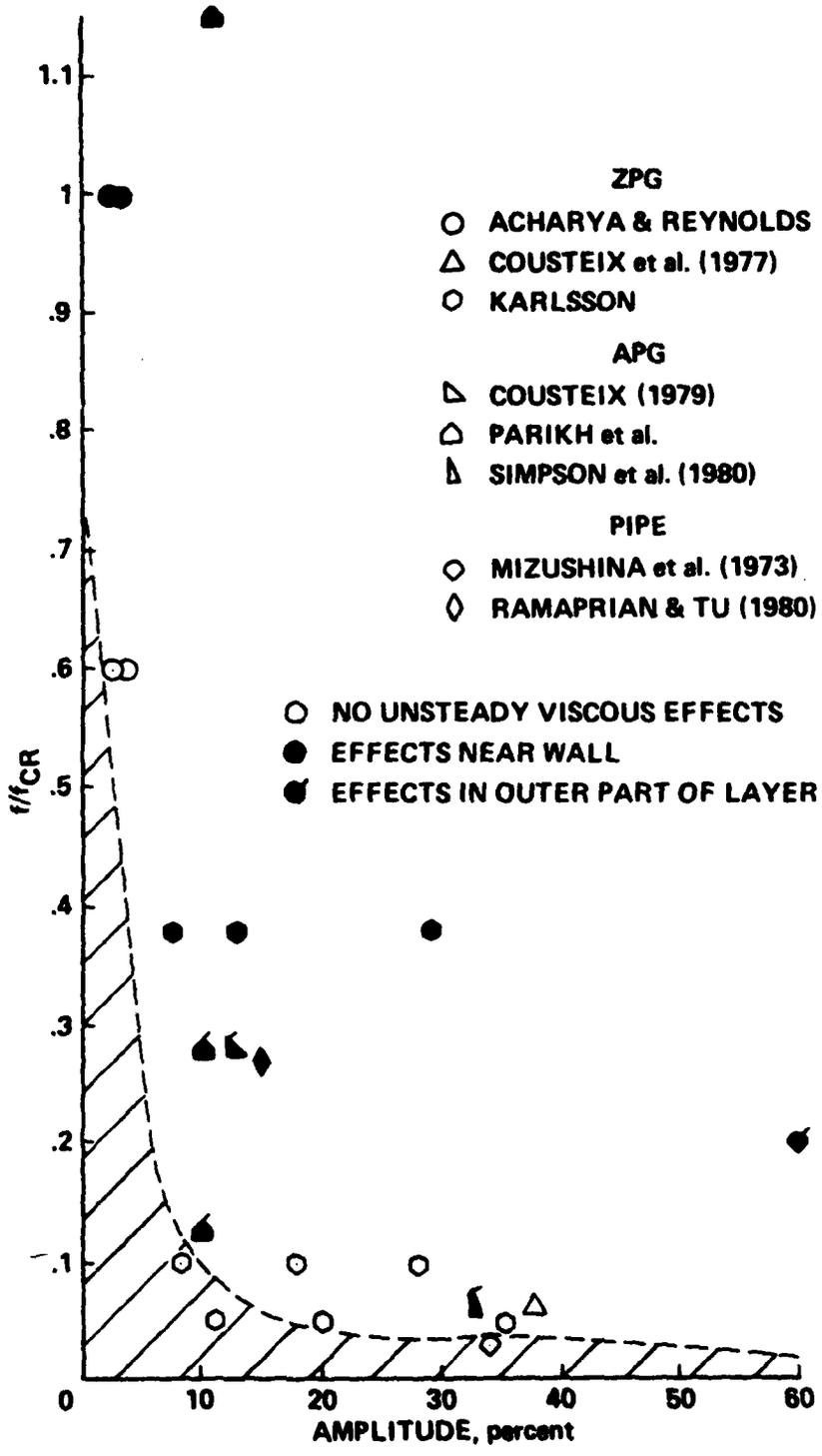


Fig. 20. Ratio of oscillation frequency to turbulent burst frequency for selected experiments

| | | |
|---|---|---|
| 1. Report No. NASA TM-81297 USAAVRADCOM TR-81-A-13 | 2. Government Accession No. AD-A103 902 | 3. Recipient's Catalog No. |
| 4. Title and Subtitle A REVIEW OF UNSTEADY TURBULENT BOUNDARY-LAYER EXPERIMENTS* | | 5. Report Date Jun[redacted]81 |
| | | 6. Performing Organization Code 40 |
| 7. Author(s) Lawrence W. Carr | | 8. Performing Organization Report No. A-8595 |
| 9. Performing Organization Name and Address Ames Research Center, Moffett Field, CA; and U.S. Army Research and Technology Labs. (AVRADCOM), Moffett Field, CA | | 10. Work Unit No. |
| | | 11. Contract or Grant No. |
| 12. Sponsoring Agency Name and Address National Aeronautics & Space Administration, Washington, D.C. 20546; and U.S. Army Aviation Research & Development Command, St. Louis, MO 93166 | | 13. Type of Report and Period Covered Technical Memorandum |
| | | 14. Sponsoring Agency Code |

15. Supplementary Notes

*Presented at IUTAM Symposium on Unsteady Turbulent Shear Flows, Toulouse, France, May 5-8, 1981.

16. Abstract

The essential results of a comprehensive review of existing unsteady turbulent boundary-layer experiments are presented. Different types of unsteady flow facilities are described, and the related unsteady turbulent boundary-layer experiments are cataloged and discussed. The measurements that have been obtained in the various experiments are described, and a complete list of experimental results is presented. All the experiments that measured instantaneous values of velocity, turbulence intensity, or turbulent shear stress are identified, and the availability of digital data is indicated. The results of the experiments are analyzed, and several significant trends are identified. An assessment of the available data is presented, delineating gaps in the existing data, and indicating where new or extended information is needed. Guidelines for future experiments are presented.

| | |
|---|---|
| 17. Key Words (Suggested by Author(s)) Boundary layers; boundary-layer flow, turbulent boundary layer, boundary-layer separation, oscillating flow, unsteady flow, separated flow, pressure gradients | 18. Distribution Statement Unlimited<br>STAR Category 34 |

| 19. Security Classif. (of this report) | 20. Security Classif. (of this page) | 21. No. of Pages | 22. Price* |
|---|---|---|---|
| Unclassified | Unclassified | 39 | $6.50 |

*For sale by the National Technical Information Service, Springfield, Virginia 22161

DAT
FILM