AD-A102 729 NEW JERSEY DEPT OF ENVIRONMENTAL PROTECTION TRENTON --ETC F/G 13/13
NATIONAL DAM SAFETY PROGRAM. BETHEL LAKE DAM (NJ00406), DELAWAR--ETC(U)
JUL 81 R J MCDERMOTT, J E GRIBBIN DACW61-79-C-0011
UNCLASSIFIED DAEN/NAP-53842/NJ00406-81/ NL

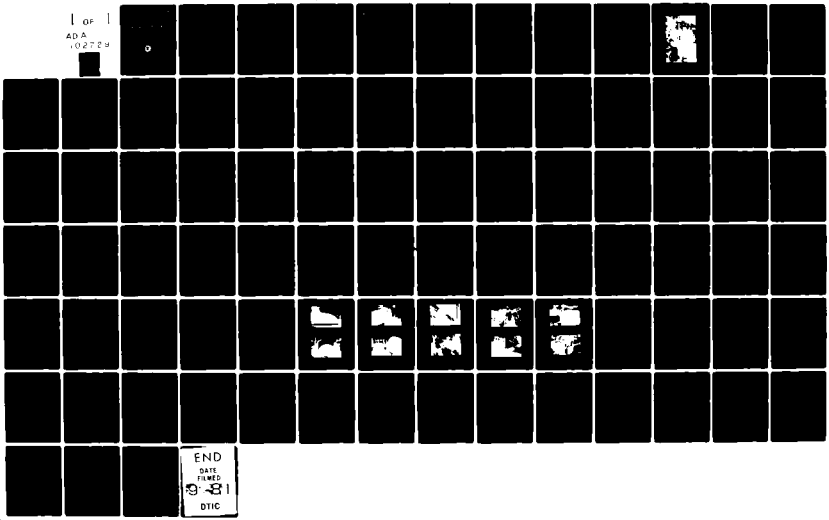

LEVEL

DELAWARE RIVER BASIN
MANTUA CREEK, GLOUCESTER COUNTY
NEW JERSEY

BETHEL LAKE DAM
NJ00406

PHASE 1 INSPECTION REPORT
NATIONAL DAM SAFETY PROGRAM

AD A102729

DTIC FILE COPY

APPROVED FOR PUBLIC RELEASE;
DISTRIBUTION UNLIMITED.

DEPARTMENT OF THE ARMY

Philadelphia District
Corps of Engineers
Philadelphia, Pennsylvania

DTIC
ELECTE
AUG 11 1981
S D
D

REPT. NO.: DAEN/NAP-53842/NJ00406-81/07

JULY 1981

81 8 10 107

NOTICE

THIS DOCUMENT HAS BEEN REPRODUCED FROM THE BEST COPY FURNISHED US BY THE SPONSORING AGENCY. ALTHOUGH IT IS RECOGNIZED THAT CERTAIN PORTIONS ARE ILLEGIBLE, IT IS BEING RELEASED IN THE INTEREST OF MAKING AVAILABLE AS MUCH INFORMATION AS POSSIBLE.

SECURITY CLASSIFICATION OF THIS PAGE (When Data Entered)

REPORT DOCUMENTATION PAGE

READ INSTRUCTIONS BEFORE COMPLETING FORM

1. REPORT NUMBER: DAEN/NAP-53842/NJ00406-81/07

2. GOVT ACCESSION NO.: AD-A102729

3. RECIPIENT'S CATALOG NUMBER:

4. TITLE (and Subtitle): Phase I Inspection Report
National Dam Safety Program
Bethel Lake Dam
Gloucester County, NJ

5. TYPE OF REPORT & PERIOD COVERED: FINAL

6. PERFORMING ORG. REPORT NUMBER:

7. AUTHOR(s): McDermott, Richard J., P.E.
Gribbin, John E., P.E.

8. CONTRACT OR GRANT NUMBER(s): DACW61-79-C-0011

9. PERFORMING ORGANIZATION NAME AND ADDRESS:
Storch Engineers
220 Ridgedale Ave.
florham Park, NJ 07932

10. PROGRAM ELEMENT, PROJECT, TASK AREA & WORK UNIT NUMBERS:

11. CONTROLLING OFFICE NAME AND ADDRESS:
NJ Department of Environmental Protection
Division of Water Resources
P.O. Box CN029
Trenton, NJ 08625

12. REPORT DATE: July 1981

13. NUMBER OF PAGES: 50

14. MONITORING AGENCY NAME & ADDRESS (if different from Controlling Office):
U.S. Army Engineer District, Philadelphia
Custom House, 2d & Chestnut Streets
Philadelphia, PA 19106

15. SECURITY CLASS. (of this report): Unclassified

15a. DECLASSIFICATION/DOWNGRADING SCHEDULE:

16. DISTRIBUTION STATEMENT (of this Report):
Approved for public release; distribution unlimited.

17. DISTRIBUTION STATEMENT (of the abstract entered in Block 20, if different from Report):

18. SUPPLEMENTARY NOTES:
Copies are obtainable from National Technical Information Service, Springfield, Virginia 22151.

19. KEY WORDS (Continue on reverse side if necessary and identify by block number):

Dams	National Dam Safety Program	Spillways
Embankments	Bethel Lake Dam, NJ	Outlet works
Visual Inspection	Delaware River Basin	Erosion
Structural Analysis	Mantua Creek, NJ	

20. ABSTRACT (Continue on reverse side if necessary and identify by block number):
This report cites results of a technical investigation as to the dam's adequacy. The inspection and evaluation of the dam is as prescribed by the National Dam Inspection Act, Public Law 92-367. The technical investigation includes visual inspection, review of available design and construction records, and preliminary structural and hydraulic and hydrologic calculations, as applicable. An assessment of the dam's general condition is included in the report.

DD FORM 1 JAN 73 1473 EDITION OF 1 NOV 65 IS OBSOLETE

SECURITY CLASSIFICATION OF THIS PAGE (When Data Entered)

DEPARTMENT OF THE ARMY
PHILADELPHIA DISTRICT, CORPS OF ENGINEERS
CUSTOM HOUSE—2 D & CHESTNUT STREETS
PHILADELPHIA, PENNSYLVANIA 19106

IN REPLY REFER TO
NAPEN-N

Honorable Brendan T. Byrne
Governor of New Jersey
Trenton, New Jersey 08611

DTIC
ELECTE
AUG 11 1981
D

31 JUL 1981

Dear Governor Byrne:

Inclosed is the Phase I Inspection Report for Bethel Lake Dam in Gloucester County, New Jersey which has been prepared under authorization of the Dam Inspection Act, Public Law 92-367. A brief assessment of the dam's condition is given in the front of the report.

Based on visual inspection, available records, calculations and past operational performance, Bethel Lake Dam, initially listed as a high hazard potential structure, but reduced to a significant hazard potential structure as a result of this inspection, is judged to be in fair overall condition. The dam's spillway is considered inadequate because a flow equivalent to 15 percent of the One Hundred Year Flood would cause the dam to be overtopped. To ensure adequacy of the structure, the following actions, as a minimum, are recommended:

a. The spillway's adequacy should be determined by a qualified professional consultant engaged by the owner using more sophisticated methods, procedures and studies within six months from the date of approval of this report. Within three months of the consultant's findings remedial measures to ensure spillway adequacy should be initiated.

b. Within [illegible] from the date of approval of this report the owner should engage a qualified professional consultant to monitor the observed seepage on a periodic basis in order to detect any changes in volume or condition.

c. Within [illegible] from the date of approval of this report the following [illegible] should be initiated:

(1) [illegible] should be investigated with respect to operational [illegible] to proper operational condition.

(2) [illegible] concrete on the upstream and downstream concrete [illegible] repaired.

APPROVED FOR PUBLIC RELEASE;
DISTRIBUTION UNLIMITED.

NAPEN-N
Honorable Brendan T. Byrne

(3) Eroded areas on the downstream side of embankment near the right and left wingwalls should be properly stabilized.

(4) Trees and adverse vegetation on the dam embankment should be removed.

(5) The embankment should be renovated to provide a properly graded downstream side slope.

d. The owner should develop written operating procedures and a periodic maintenance plan to ensure the safety of the dam, within one year from the date of approval of this report.

e. An emergency action plan and warning system should be developed which outlines actions to be taken by the owner to minimize the downstream effects of an emergency at the dam within six months from the date of approval of this report.

A copy of the report is being furnished to Mr. Dirk C. Hofman, New Jersey Department of Environmental Protection, the designated State Office contact for this program. Within five days of the date of this letter, a copy will also be sent to Congressman Florio of the First District. Under the provision of the Freedom of Information Act, the inspection report will be subject to release by this office, upon request, five days after the date of this letter.

Additional copies of this report may be obtained from the National Technical Information Service (NTIS), Springfield, Virginia 22161 at a reasonable cost. Please allow four to six weeks from the date of this letter for NTIS to have copies of the report available.

An important aspect of the Dam Inspection Program will be the implementation of the recommendations made as a result of the inspection. We accordingly request that we be advised of proposed actions taken by the State to implement our recommendations.

Sincerely,

ROGER L. BALDWIN
Lieutenant Colonel, Corps of Engineers
Commander and District Engineer

1 Incl
As stated

Copies furnished:
Mr. Dirk C. Hofman, [illegible] Dept., Director
Division of Water Resources
N.J. Dept. of Environmental Protection
P.O. Box CN029
Trenton, NJ 08625

Mr. John O'Dowd, Acting [illegible]
Bureau of Flood Plain Regulation
Division of Water Resources
N.J. Dept. of Environmental Protection
P.O. Box CN029
Trenton, NJ 08625

Accession For
NTIS GRA&I ☒
DTIC TAB
Unannounced
Justification
By
Distribution/
Availability Codes
Dist | Avail and/or Special
A

BETHEL LAKE DAM (NJ00406)

CORPS OF ENGINEERS ASSESSMENT OF GENERAL CONDITIONS

This dam was inspected on 9 and 29 January 1981 by Storch Engineers, under contract to the State of New Jersey. The State, under agreement with the U.S. Army Engineer District, Philadelphia, had this inspection performed in accordance with the National Dam Inspection Act, Public Law 92-367.

Bethel Lake Dam, initially rated as a high hazard potential structure, but reduced to a significant hazard potential structure as a result of this inspection, is judged to be in fair overall condition. The dam's spillway is considered inadequate because a flow equivalent to 15 percent of the One Hundred Year Flood would cause the dam to be overtopped. To ensure adequacy of the structure, the following actions, as a minimum, are recommended:

a. The spillway's adequacy should be determined by a qualified professional consultant engaged by the owner using more sophisticated methods, procedures and studies within six months from the date of approval of this report. Within three months of the consultant's findings remedial measures to ensure spillway adequacy should be initiated.

b. Within six months from the date of approval of this report the owner should engage a qualified professional consultant to monitor the observed seepage on a periodic basis in order to detect any changes in volume or condition.

c. Within six months from the date of approval of this report the following remedial actions should be initiated:

(1) The outlet works should be investigated with respect to operational adequacy and then restored to proper operational condition.

(2) Spalling and cracked concrete on the upstream and downstream concrete bridge wingwalls should be repaired.

(3) Erosion areas on the downstream side of embankment near the right and left wingwalls should be properly stabilized.

(4) Trees and overgrown vegetation on the dam embankment should be removed.

(5) The [illegible] should be renovated to provide a properly graded downstream side slope.

d. The owner should develop written operating procedures and a periodic maintenance program to insure the safety of the dam, within one year from the date of approval of this report.

e. An emergency action plan and warning system should be developed which outlines actions to be taken by the owner to minimize the downstream effects of an emergency at the dam within six months from the date of approval of this report.

ROGER L. BALDWIN
Lieutenant Colonel, Corps of Engineers
Commander and District Engineer

PHASE I REPORT

NATIONAL DAM SAFETY PROGRAM

Name of Dam:	Bethel Lake Dam, I.D. NJ00406
State Located:	New Jersey
County Located:	Gloucester
Drainage Basin:	Delaware River
Stream:	Mantua Creek
Date of Inspection:	January 9, 1981 January 27, 1981

Assessment of General Condition of Dam

Based on visual inspection, past operational performance and Phase I engineering analyses, Bethel Lake Dam is assessed as being in fair overall condition.

Based on investigations of the downstream flood plain made in connection with this report, it is recommended that the hazard potential classification be downgraded from high to significant hazard.

Hydraulic and hydrologic analyses indicate that the spillway is inadequate. Discharge capacity of the spillway is not sufficient to pass the designated spillway design flood (100-year storm) without an overtopping of the dam. The spillway is capable of passing approximately 14 percent of the SDF. Therefore, the owner should in the near future engage a professional engineer experienced in the design and construction of dams to perform more accurate hydraulic and hydrologic analyses. Based on the findings of the analyses, the need for, and type of remedial measures should be determined and then implemented.

The observed seepage should be monitored on a periodic basis by a professional engineer experienced in the design and construction of dams in order to detect any changes in volume or condition.

In addition, it is recommended that the following remedial measures be undertaken in the near future:

1) The outlet works should be investigated with respect to operational adequacy and then restored to proper operational condition.

2) Spalled and cracked concrete on the upstream and downstream concrete bridge wingwalls should be repaired.

3) Eroded areas on the downstream side of embankment near the right and left wingwalls should be properly stabilized.

4) Trees and adverse vegetation on the dam embankment should be removed.

5) The embankment should be renovated to provide a properly graded downstream side slope.

The owner should, in the near future, develop an emergency action plan together with an effective warning system outlining actions to be taken by the operator to minimize downstream effects of an emergency at the dam.

In the future, the owner of the dam should develop written operating procedures and a periodic maintenance plan to ensure the safety of the dam.

Richard J. McDermott

Richard J. McDermott, P.E.

John E. Gribbin

John E. Gribbin, P.E.

OVERVIEW - BETHEL LAKE DAM

31 JANUARY 1981

TABLE OF CONTENTS

	Page
ASSESSMENT OF GENERAL CONDITION OF DAM	i
OVERVIEW PHOTO	iii
TABLE OF CONTENTS	iv
PREFACE	vi
SECTION 1 - PROJECT INFORMATION	1
1.1 General	
1.2 Description of Project	
1.3 Pertinent Data	
SECTION 2 - ENGINEERING DATA	8
2.1 Design	
2.2 Construction	
2.3 Operation	
2.4 Evaluation	
SECTION 3 - VISUAL INSPECTION	10
3.1 Findings	
SECTION 4 - OPERATIONAL PROCEDURES	13
4.1 Procedures	
4.2 Maintenance of Dam	
4.3 Maintenance of Operating Facilities	
4.4 Description of Warning System	
4.5 Evaluation	

TABLE OF CONTENTS (cont.)

	Page
SECTION 5 - HYDRAULIC/HYDROLOGIC	15
5.1 Evaluation of Features	
SECTION 6 - STRUCTURAL STABILITY	17
6.1 Evaluation of Structural Stability	
SECTION 7 - ASSESSMENT AND RECOMMENDATIONS	19
7.1 Dam Assessment	
7.2 Recommendations	
PLATES	
1 KEY MAP	
2 VICINTIY MAP	
3 SOIL MAP	
4 GENERAL PLAN	
5 SECTIONS	
6 PHOTO LOCATION PLAN	
APPENDICES	
1 Check List - Visual Inspection	
Check List - Engineering Data	
2 Photographs	
3 Engineering Data	
4 Hydraulic/Hydrologic Computations	
5 Bibliography	

PREFACE

This report is prepared under guidance contained in the Recommended Guidelines for Safety Inspection of Dams, for Phase I Investigations. Copies of these guidelines may be obtained from the Office of Chief of Engineers, Washington, D.C. 20314. The purpose of a Phase I Investigation is to identify expeditiously those dams which may pose hazards to human life or property. The assessment of the general condition of the dam is based upon available data and visual inspections. Detailed investigation, and analyses involving topographic mapping, subsurface investigations, testing, and detailed computational evaluations are beyond the scope of a Phase I investigation; however, the investigation is intended to identify any need for such studies.

In reviewing this report, it should be realized that the reported condition of the dam is based on observations of field conditions at the time of inspection along with data available to the inspection team. It is important to note that the condition of dam depends on numerous and constantly changing internal and external conditions, and is evolutionary in nature. It would be incorrect to assume that the present condition of the dam will continue to represent the condition of the dam at some point in the future. Only through continued care and inspection can there be any chance that the unsafe conditions be detected.

Phase I inspections are not intended to provide detailed hydraulic and hydrologic analyses. In accordance with the established Guidelines, the Spillway Test flood is based on the estimated "Probable Maximum Flood" for the region (greatest reasonably possible storm runoff), or fractions thereof. The test flood provides a measure of relative spillway capacity and serves as an aid in determining the need for more detailed hydraulic and hydrologic studies, considering the size of the dam, its general condition and the downstream damage potential.

PHASE I INSPECTION REPORT

NATIONAL DAM SAFETY PROGRAM

BETHEL LAKE DAM, I.D. NJ00406

SECTION 1: PROJECT INFORMATION

1.1 General

a. Authority

Public Law 92-367, August 8, 1972, authorized the Secretary of the Army, through the Corps of Engineers, to initiate a National Program of Dam Inspection throughout the United States. The Division of Water Resources of the New Jersey Department of Environmental Protection (NJDEP) in cooperation with the Philadelphia District of the Corps of Engineers has been assigned the responsibility of supervising the inspection of dams within the State of New Jersey. Storch Engineers has been retained by the NJDEP to inspect and report on a selected group of these dams. The NJDEP is under agreement with the Philadelphia District of the Corps of Engineers.

b. Purpose of Inspection

The visual inspections of Bethel Lake Dam were made on January 9 and 27, 1981. The purpose of the inspections was to make a general assessment of the structural integrity and operational adequacy of the dam structure and its appurtenances.

1.2 Description of Project

a. Description

The dam is an earth embankment supporting Gloucester County Highway Route 635 known as Lambs Road. The spillway structure consists of a horseshoe-shaped concrete weir located on the upstream side of the embankment. At the center of the embankment a concrete bridge forms the spillway discharge channel.

The outlet works consists of a gated 2' X 2.5' sluice which transversely penetrates the center of the concrete spillway structure. The outlet discharges from the downstream face of the spillway structure into a stilling area between the spillway and bridge.

The elevation of the spillway crest is 50.0, National Geodetic Vertical Datum (N.G.V.D.) while that of the crest of dam is 53.2. The elevation of the invert of the outlet works is 37.2 while that of the channel bed is 36.8. The overall length of the dam is 150 feet and its height is 16.4 feet. The top width of the dam is approximately 55 feet and the side slopes are variable.

b. Location

Bethel Lake Dam is located in Mantua and Washington Townships, Gloucester County, New Jersey. It impounds a recreational lake located adjacent to Route 635. Principal access to the dam is by Route 635 which traverses the crest of the dam. Discharge from the spillway of the dam flows into the Mantua Creek.

c. Size and Hazard Classification

The dam is classified in accordance with criteria presented in "Recommended Guidelines for Safety Inspection of Dams" published by the U.S. Army Corps of Engineers. Size categories consist of Small, Intermediate and Large while hazard categories are designated as Low, Significant and High.

Size Classification: Bethel Lake Dam is classified as "Small" size since its maximum storage volume is 143 acre-feet (which is less than 1000 acre-feet) and its height is 16.4 feet (which is less than 40 feet).

Hazard Classification: Visual inspection of the downstream flood plain of the dam indicates that failure of the dam would not inundate a farm dwelling located approximately 500 feet downstream from the dam. Dam failure during a storm equivalent to the SDF could result in damage to two road bridges and about 3 dwellings located approximately 2 miles from the dam. Loss of more than a few lives is not anticipated. Accordingly, Bethel Lake Dam is classified as "Significant" hazard.

d. Ownership

Bethel Lake Dam and its impoundment are owned and operated by three separate parties: Dorothy Rannels, the Bickel Family and the County of Gloucester. Dorothy Rannels owns the portion of the spillway structure and impoundment located in Mantua Township. The Bickel Family owns the remainder of the spillway structure located in Washington Township. The remainder of the impoundment located in Washington Township is owned by the County of Gloucester. The Gloucester County Department of Parks and Recreation is currently negotiating with Bickel to purchase their (southeast) half of the spillway which corresponds to the side of Bethel Lake that has been purchased by the

County for its park tract. The portion of the earth embankment (supporting County Highway Route 635) located in both Mantua and Washington Township within the County right-of-way is under the jurisdiction of the County of Gloucester.

e. Purpose of Dam

The purpose of the dam is the impoundment of a recreational lake facility.

f. Design and Construction History

Bethel Lake Dam was constructed in accordance with plans entitled "Concrete Dam to Join Bridge No. 5-J-6" approved by the NJDEP in March, 1938. Reportedly, a flood in 1931 or 1932 damaged the old timber spillway and county road bridge and plans were prepared to construct a new bridge structure and spillway under Stream Encroachment Application #243. The bridge was constructed in 1932 but construction on the spillway did not begin until NJDEP approval was granted on 3/9/38.

Reportedly, construction work was in progress on September 1, 1940 when the record flood washed out all the forms and the dam was overtopped by 1.5 feet as reported by the owner at that time. Reportedly, the dam failed to the left of the bridge and destroyed the penstock and mill located at the toe of the dam.

Reportedly, as indicated in the NJDEP file no work on the dam was performed between 9/21/40 and 4/6/42. The owner was then given an extension to complete all work by 9/9/42. It is not known when construction of the present spillway was completed.

g. Normal Operational Procedures

The dam and its appurtenances are maintained by the respective owners. Reportedly, no maintenance has been performed on the spillway structure. There is no fixed schedule of maintenance; repairs are made as the need arises. Maintenance of the dam embankment is limited to normal roadway maintenance.

The outlet works has been used to drain the lake for lake maintenance purposes, but its gate valve is not presently operable. The outlet works and mechanism were not observed at the time of inspection. It is not known when the lake was last lowered.

1.3 Pertinent Data

a. Drainage Area	8.0 square miles
b. Discharge at Damsite	
Maximum flood at damsite	September 1, 1940 (Quantity of flow unknown)
Outlet Works at pool elevation	83 cfs.
Spillway capacity at top of dam	800 cfs
c. Elevation (N.G.V.D.)	
Top of Dam	53.2
Maximum pool-design surcharge	57.3
Recreation pool	50.2
Spillway crest	50.0
Stream bed at toe of dam	36.8
Maximum tailwater	42 (Estimated)

d. Reservoir

Length of maximum pool	2000 feet (Scaled)
Length of recreation pool	1900 feet (Scaled)

e. Storage (Acre-feet)

Recreation pool	76
Design surcharge	290
Top of dam	143

f. Reservoir Surface (acres)

Top of dam	30.9 (Estimated)
Maximum pool - design surcharge	47.9 (Estimated)
Recreation pool	17.5

g. Dam

Type	Earthfill
Length	175 feet
Height	16.4 feet
Sideslopes - Upstream	2 horiz. to 1 vert.
- Downstream	1 horiz. to 2 vert.
Zoning	Unknown
Impervious core	Unknown
Cutoff	Unknown
Grout curtain	Unknown

h. Diversion and Regulating Tunnel N.A.

i. Spillway

Type	Concrete Weir
Length of weir	42 feet
Crest elevation	50.0

Gates	N.A.
Upstream channel	N.A.
Downstream channel	Concrete bridge opening

j. Regulating Outlet

2' X 2.5' low-level sluice controlled by gate.

SECTION 2: ENGINEERING DATA

2.1 Design

No plans or calculations pertaining to the original construction of the dam could be obtained. Drawings prepared in 1932 and approved in 1938 by the NJDEP relating to the construction of the present spillway structure which show plans of the spillway and appurtenant structures are available in the files of Gloucester County, Engineering Department and the NJDEP, Division of Water Resources.

Design flood peak flow was computed to be 680 c.f.s. based on the Central Jersey Curve. Hydraulic analysis indicated that the spillway could pass 737 c.f.s. with a free board of 0.2 feet.

2.2 Construction

No data or reports pertaining to the construction of the dam are available. Construction data or reports are limited to structural inventories and reports for the bridge on file with the County and Gloucester and the NJDEP.

An inspection report on file with the NJDEP dated 1970 indicated that the dam embankment appeared to be in excellent condition with no visible signs of leakage. Some minor spalling of the concrete was observed on the spillway and the overall condition of the dam was rated excellent.

2.3 Operation

Reportedly, no maintenance reports other than the bridge inspection reports are on file with the County of Gloucester pertaining to spillway and bridge. No data pertaining to operations are available.

An inspection report prepared in 1980 indicated deterioration of bridge concrete, ineffective slope protection and steep downstream embankment slope.

2.4 Evaluation

a. Availability

Available engineering data is limited to that which is on file with the NJDEP and the County of Gloucester. These files contain plans, calculations and inspection reports relating to the present spillway structure and bridge.

b. Adequacy

Available engineering data pertaining to Bethel Lake Dam is of significant assistance to the performance of a Phase I evaluation. A list of absent information is included in paragraph 7.1.b.

c. Validity

The available hydraulic analyses appear to be valid with respect to engineering practice generally accepted in the 1930's.

Although spillway discharge rates and design flood computed in 1932 are in general agreement with the values established in this report, procedures used in the 1932 computations are not valid with respect to analytic procedures developed by the Corps of Engineers for the present inspection and assessment program.

SECTION 3: VISUAL INSPECTON

3.1 Findings

a. General

The inspections of Bethel Lake Dam were performed on January 9 and 27, 1981 by staff members of Storch Engineers. A copy of the visual inspection check list is contained in Appendix 1. The following procedures were employed for the inspection:

1) The embankment of the dam, appurtenant structures and adjacent areas were examined.
2) The embankment and accessible appurtenant structures were measured and key elevations determined by surveyor's level.
3) The embankment, appurtenant structures and adjacent areas were photographed.
4) The immediate downstream flood plain was toured to evaluate downstream development and restricting structures.

b. Dam

The roadway forming the crest of the embankment was in satisfactory condition. The downstream face of the embankment was covered with weeds, briars, and trees. The tree caliper ranged in size from one to six inches. An erosion gully was observed extending from the roadway down the downstream side of the embankment to the right of the spillway. Extensive erosion was also observed on the downstream face of the embankment adjacent to the right wingwall. This erosion appeared to result from a combination of surface runoff and high tailwater. Attempts appeared to have been made to stabilize the erosion

with concrete. The concrete was broken off in chunks and the stabilization was no longer effective. Erosion was also observed adjacent to the left downstream bridge wingwall.

c. Description of Seepage

Orange deposits were observed at the left and right banks of the downstream channel adjacent to the bridge wingwalls. The orange deposits at the right wingwall were observed exuding from the embankment and seepage was observed flowing with a trickle over these orange deposits.

The remains of an old mill was observed located at the left downstream toe of the dam. It was of stone masonry construction and only the downstream and right walls remained. Inside the remains of these two walls an area of standing water was observed which led away from the downstream side of the structure in the form of a stream flowing with a trickle. Orange deposits were also observed in the stream.

d. Appurtenant Structures

The crest of the horseshoe shaped concrete spillway appeared to be in satisfactory condition. The downstream face of the spillway could not be properly observed because it was obscured by overflow. No outlet works operating mechanism was observed.

The concrete railing on both the upstream and the downstream side of the bridge was in satisfactory condition. The downstream wingwalls appeared to be sound although spalling was observed. The left wingwall was spalled and cracked at its top and also was considerably spalled near the water line. The spalling on the foundation of the wingwall at one location was approximately 4 to 6 inches deep. The concrete surfaces on the upstream side of the bridge and the upstream side of

the culvert appeared to be in satisfactory condition with the exception of the foundation portion on left side described above. The right wingwall appeared to be spalled approximately halfway up the wall and a horizontal hairline crack was observed along the wall about one-third of the way up. The foundation portion of the right wingwall was also cracked and spalled.

The arch culvert bridge appeared to be structurally sound on the downstream side with no significant cracks observed. The concrete surfaces in general appeared to be in satisfactory condition. Reinforcing steel was observed at the concrete surface within the culvert, apparently resulting from improper placement during construction.

e. Reservoir Area

The reservoir is used as a recreational impoundment. The entire perimeter of the reservoir is wooded.

f. Downstream Channel

The downstream channel in the vicinity of the dam was approximately ten feet wide with banks approximately one to two feet high. No significant obstructions were observed in the vicinity of the dam.

SECTION 4: OPERATIONAL PROCEDURES

4.1 Procedures

The level of water in Bethel Lake is regulated by discharge over the concrete spillway. Reportedly, the outlet works of the dam is not currently used to drain the lake or to augment the discharge capacity of the spillway. It is not known when the lake was last drawn down.

4.2 Maintenance of the Dam

Reportedly, maintenance is performed on an "as needed" basis. The Gloucester County Road Department maintains the shoulder of the roadway on the crest of the dam and reportedly does not maintain the upstream or downstream sides of the dam. Reportedly, maintenance of the spillway structure is performed on an "as needed" basis only.

4.3 Maintenance of Operating Facilities

It is not known if the operating mechanism for the outlet works currently functions properly. Reportedly, the outlet is not currently maintained.

4.4. Description of Warning System

Reportedly, no warning system is currently in use for the dam.

4.5 Evaluation of Operational Adequacy

The operation of the dam has been successful to the extent that the dam reportedly has not been overtopped since the construction of the new spillway. Maintenance documentation is poor and although

maintenance has been adequate in some areas, a few aspects of dam maintenance have not been adequately performed, including the following:

1) Outlet works facilities not maintained.
2) Spalled concrete and cracks on upstream and downstream concrete bridge wingwalls not repaired.
3) Erosion observed on the downstream embankment near the right and left wingwalls not repaired.
4) Trees and other adverse vegetation on the downstream side of embankment not removed.

SECTION 5: HYDRAULIC/HYDROLOGIC

5.1 Evaluation of Features

a. Design Data

The quantity of storm water runoff that the spillway should be able to handle is based on the size and hazard classification of the dam. This runoff quantity, called the spillway design flood (SDF) is described in terms of return frequency or probable maximum flood (PMF) depending on the extent of the dam's size and potential hazard. According to the "Recommended Guidelines for Safety Inspection of Dams" published by the U.S. Army Corps of Engineers, the SDF for Bethel Lake Dam falls in a range of 100-year frequency to 1/2 PMF. In this case, the low end of the range, 100-year frequency, is chosen since the factors used to select size and hazard classification are on the low side of their respective ranges.

The SDF peak computed for Bethel Lake Dam is 5836 c.f.s. This value is derived from the 100-year flood hydrograph computed by the use of the HEC-1-DAM Flood Hydrograph Computer Program using the Soil Conservation Service triantular unit hydrograph with curvilinear transformation. Hydrologic computations and computer output are contained in Appendix 4.

The spillway discharge rates were computed by the use of a weir formula approprite for the configuration of the spillway structure. The total spillway discharge with lake level equal to the top of the dam was computed to be 800 c.f.s. The SDF was routed through the dam by use of the HEC-1-DAM computer program using the modified Puls Method. In routing the SDF, it was found that the dam crest would be overtopped by a depth of 4.1 feet. Accordingly, the subject spillway is assessed as being inadequate in accordance with criteria developed by the U.S. Army Corps of Engineers.

b. Experience Data

Reportedly, the dam has not been overtopped since construction of the present spillway. However, the dam did overtop while under construction during the flood of September 1, 1940.

c. Visual Observation

No evidence of overtopping of the embankment was noted at the time of inspection.

d. Overtopping Potential

According to the hydraulic and hydrologic analyses, a storm of intensity equivalent to the SDF would cause overtopping of the dam by a height of 4.1 feet above the top of the dam. The spillway is capable of passing approximately 14 percent of the SDF with lake level equal to the top of dam.

e. Drawdown Data

Drawdown of the lake is accomplished by opening the 2.0' X 2.5' sluice gate. Total time for drawdown is estimated to be 19.6 hours (See Appendix 4).

SECTION 6: STRUCTURAL STABILITY

6.1 Evaluation of Structural Stability

a. Visual Observations

The dam appeared, at the time of inspection to be outwardly structurally sound with no evidence of embankment cracks or distress. Seepage was observed near the junction of both the left and right concrete bridge wingwall abutments and the downstream face of the dam embankment. The downstream face of embankment appeared to have an excessively steep slope. However, the seepage and excessive side slope did not appear to be an indication of immediate structural instability.

b. Generalized Soils Description

The generalized soils description of the dam site consists of revent alluvial deposits, poorly drained and high in organic content overlying stratified deposits of marine origin referred to on the Geologic Map of New Jersey as the Kirkwood Sand formation.

c. Design and Construction Data

Analysis of structural stability and construction data for the embankment are not available.

d. Operating Records

No operating records are available for the dam. The water level of Bethel Lake is not monitored.

e. Post-Construction Changes

Reportedly, it is not known whether or not there have been any post-construction changes. No evidence of significant post-construction changes were noted at the time of inspection.

f. Seismic Stability

Bethel Lake Dam is located in Seismic Zone 1 as defined in "Recommended Guidelines for Safety Inspection of Dams," which is a zone of very low seismic activity. Experience indicates that dams in Seismic Zone 1 will have adequate stability under seismic loading conditions if they have adequate stability under static load conditions. Bethel Lake Dam appeared to be stable under static loading conditions at the time of inspection.

SECTION 7: ASSESSMENT AND RECOMMENDATIONS

7.1 Dam Assessment

a. Safety

Based on hydraulic and hydrologic analyses outlined in Section 5 and Appendix 4, the spillway of Bethel Lake Dam is assessed as being inadequate. The spillway is not able to pass the SDF without an overtopping of the dam.

The embankment appeared, at the time of inspection, to be generally outwardly stable. Observed seepage and excessive downstream side slope are not considered to be evidence of immediate dam instability.

b. Adequacy of Information

Information sources for this report include 1) field inspection, 2) USGS quadrangle, 3) information on file with the NJDEP and 4) consultation and information on file with the Gloucester County Engineering Department. The information obtained is sufficient to allow a Phase I assessment as outlined in "Recommended Guidelines for Safety Inspection of Dams."

Some of the absent data are as follows:

1. As-built drawings.
2. Description of fill material for embankment.
3. Design computations and reports.
4. Soils report for the site.

c. Necessity for Additional Data/Evaluation

Although some data pertaining to Bethel Lake Dam are not available, additional data are not considered imperative for this Phase I evaluation.

7.2 Recommendations

a. Remedial Measures

Based on hydraulic and hydrologic analyses outlined in paragraph 5.1.a., the spillway is assessed as being inadequate. It is therefore recommended that a professional engineer experienced in the design and construction of dams be engaged in the near future to perform more accurate hydraulic and hydrologic analyses. Based on the findings of these analyses, the need for and type of remedial measures should be determined and them implemented.

Since the dam has been operated and maintained by Gloucester County, the County should, in the near future, develop an emergency action plan together with an effective warning system outlining actions to be taken by the operator to minimize downstream effects of an emergency at the dam.

It is recommended that the following remedial measures be undertaken by the owners in the near future.

1) The outlet works should be investigated with respect to operational adequacy and then restored to proper operational condition.

2) Spalled and cracked concrete on the upstream and downstream concrete bridge wingwalls should be repaired.

3) Eroded areas on the downstream side of embankment near the right and left wingwalls should be properly stabilized.

4) Trees and adverse vegetation on the dam embankment should be removed.

5) The embankment should be renovated to provide a properly graded downstream side slope.

b. Maintenance

In the future, the owner of the dam should develop written operating procedures and a periodic maintenance plan to ensure the safety of the dam.

c. Additional Studies

The observed seepage should be monitored on a periodic basis by a professional engineer experienced in the design and construction of dams in order to detect any changes in volume or condition.

PLATES

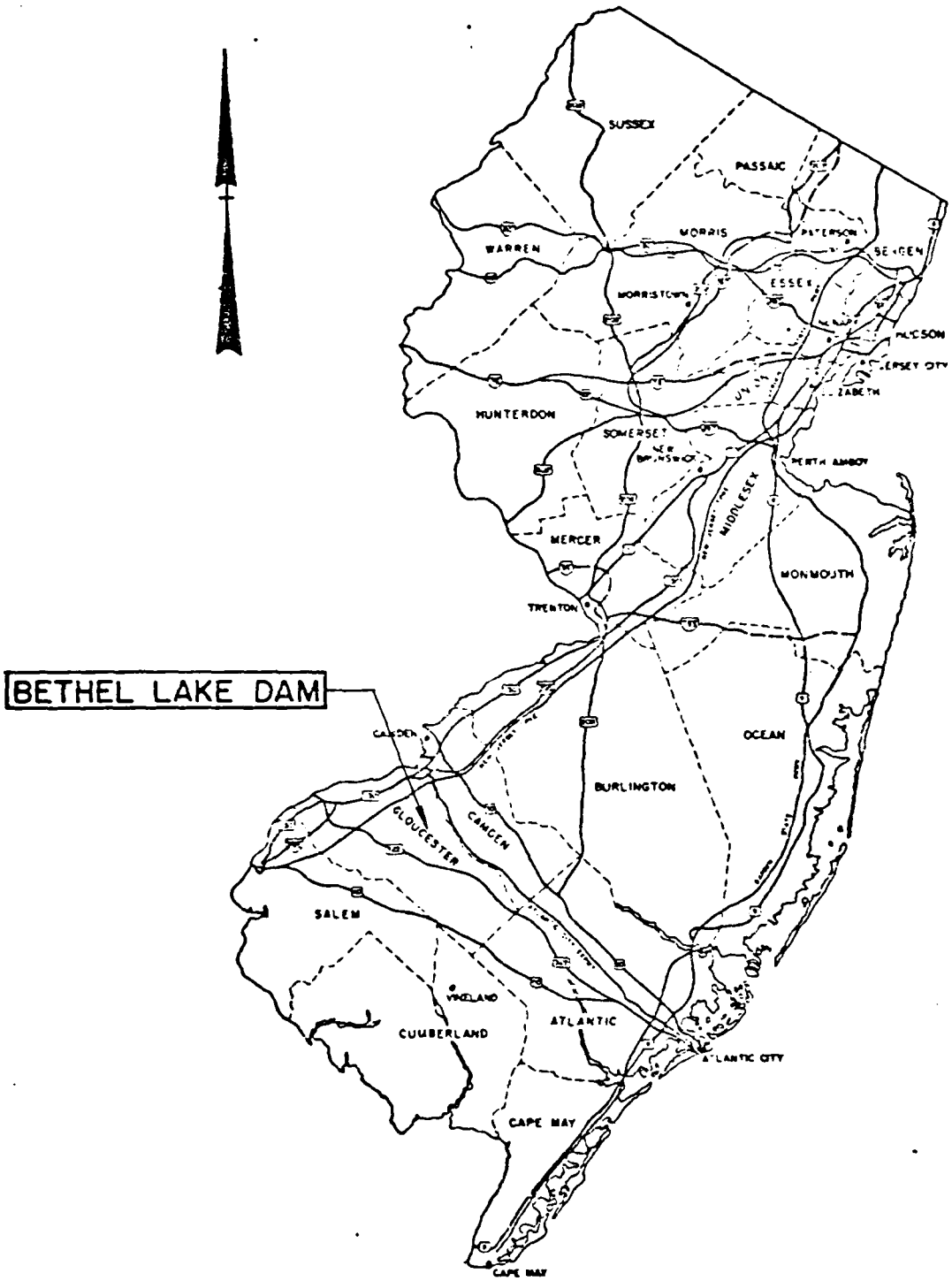

PLATE I

STORCH ENGINEERS FLORHAM PARK, NEW JERSEY	INSPECTION AND EVALUATION OF DAMS **KEY MAP** BETHEL LAKE DAM	
DIVISION OF WATER RESOURCES N.J. DEPT. OF ENVIR. PROTECTION TRENTON, NEW JERSEY		SCALE: NONE
		DATE: FEB. 1981

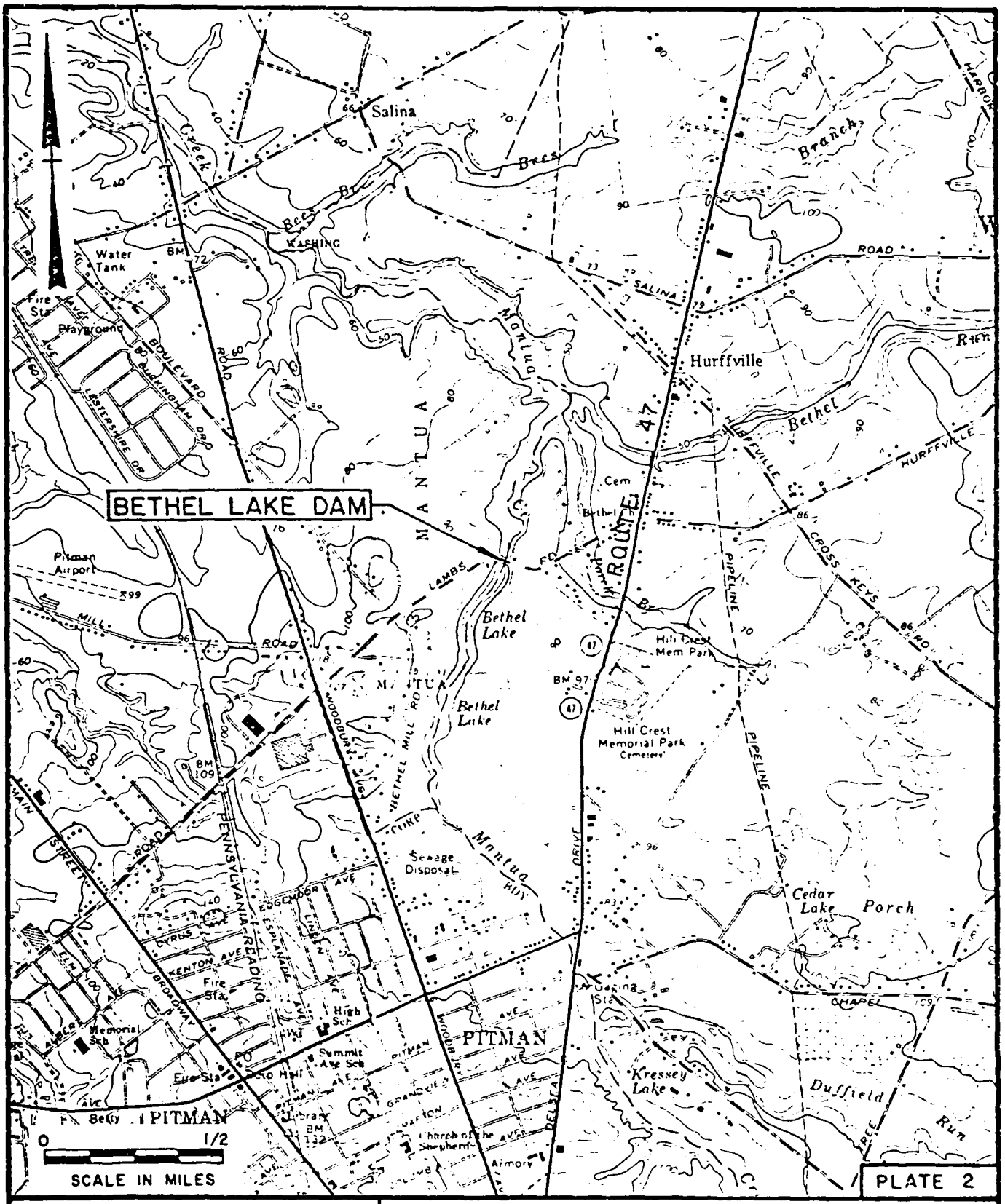

PLATE 2

STORCH ENGINEERS
FLORHAM PARK, NEW JERSEY

DIVISION OF WATER RESOURCES
N.J. DEPT. OF ENVIR. PROTECTION
TRENTON, NEW JERSEY

INSPECTION AND EVALUATION OF DAMS

VICINITY MAP

BETHEL LAKE DAM

SCALE: AS SHOWN

DATE: FEB. 1981

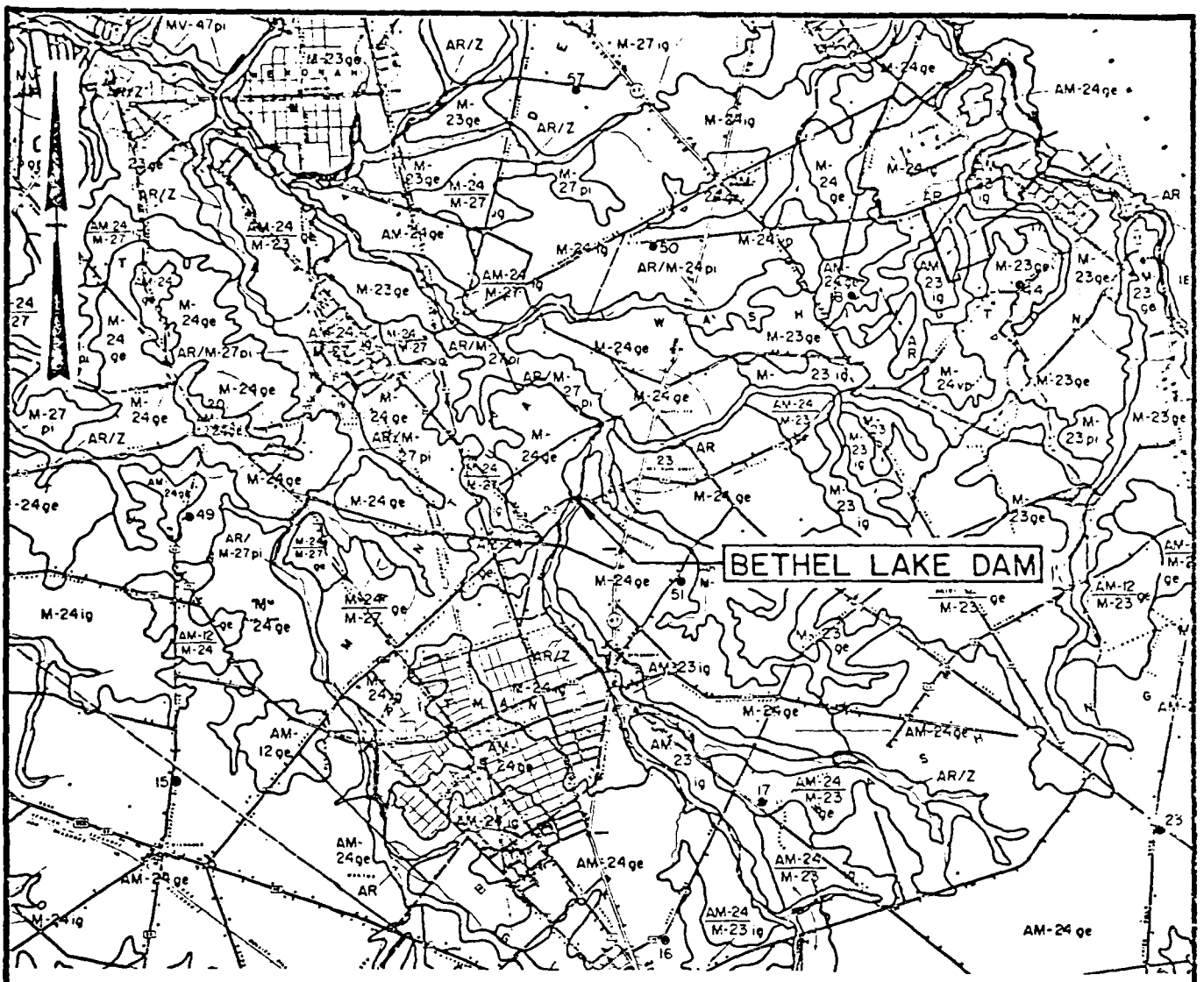

Legend

AR/M-27 Recent alluvial deposits, underlaid by a formation of stratified deposits of marine origin.

AR/Z Recent alluvial deposits, poorly drained, high in organic content.

M-24 Stratified deposits of marine origin referred to on the Geologic Map of New Jersey as the Kirkwood Sand formation.

Note: Information taken from Rutgers University, Soil Survey of New Jersey, Report No. 16, Gloucester County, March 1955 and Geologic Map of New Jersey prepared by J. V. Lewis and H. Kummel 1910-1912, revised by H. B. Kummel 1931 and M. Johnson 1950.

PLATE 3

STORCH ENGINEERS FLORHAM PARK, NEW JERSEY.	INSPECTION AND EVALUATION OF DAMS SOIL MAP BETHEL LAKE DAM	
DIVISION OF WATER RESOURCES N.J. DEPT. OF ENVIR. PROTECTION TRENTON, NEW JERSEY		SCALE: NONE DATE: FEB. 1981

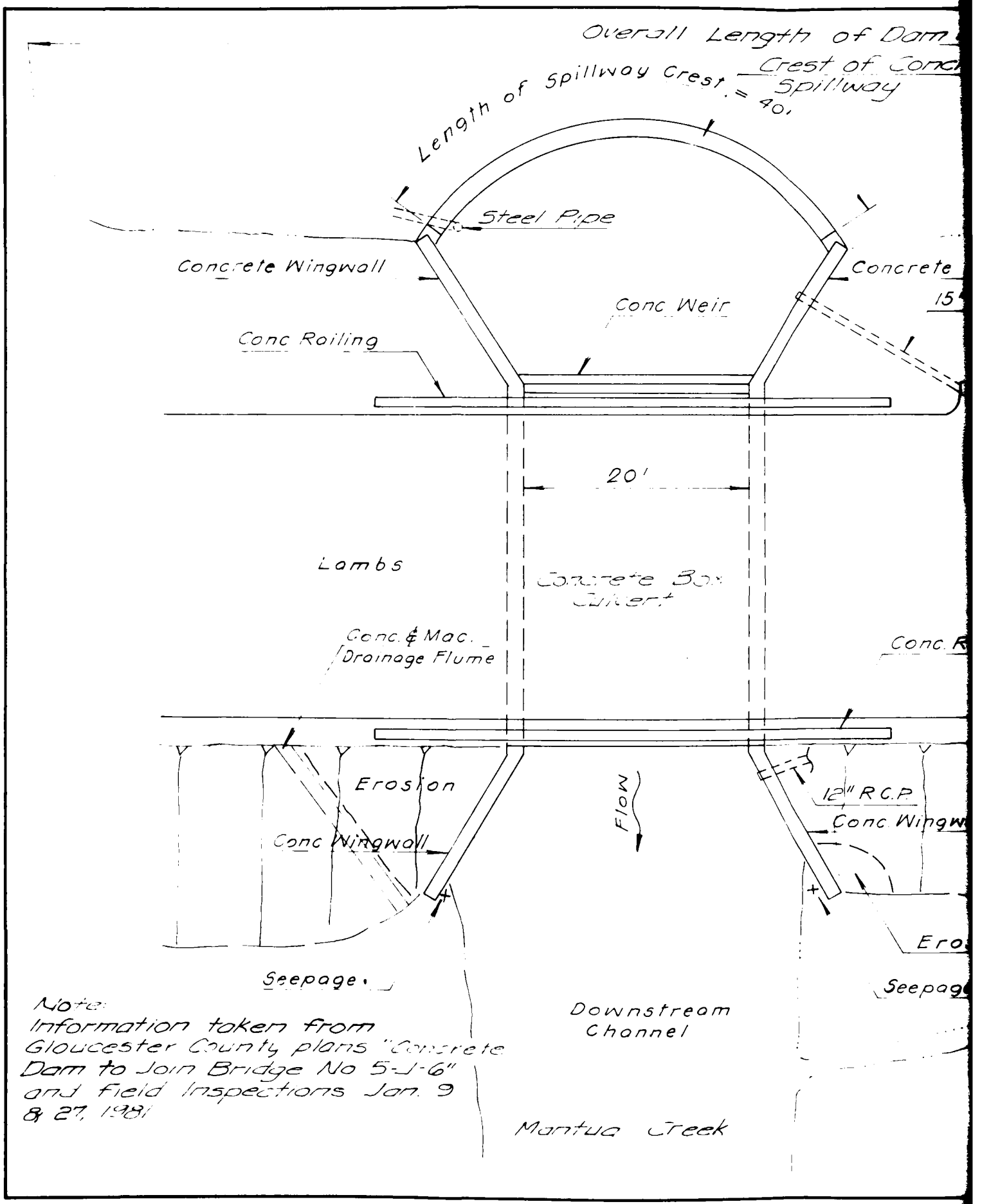

Note:
Information taken from Gloucester County plans "Concrete Dam to Join Bridge No 5-J-6" and Field Inspections Jan. 9 & 27, 1981

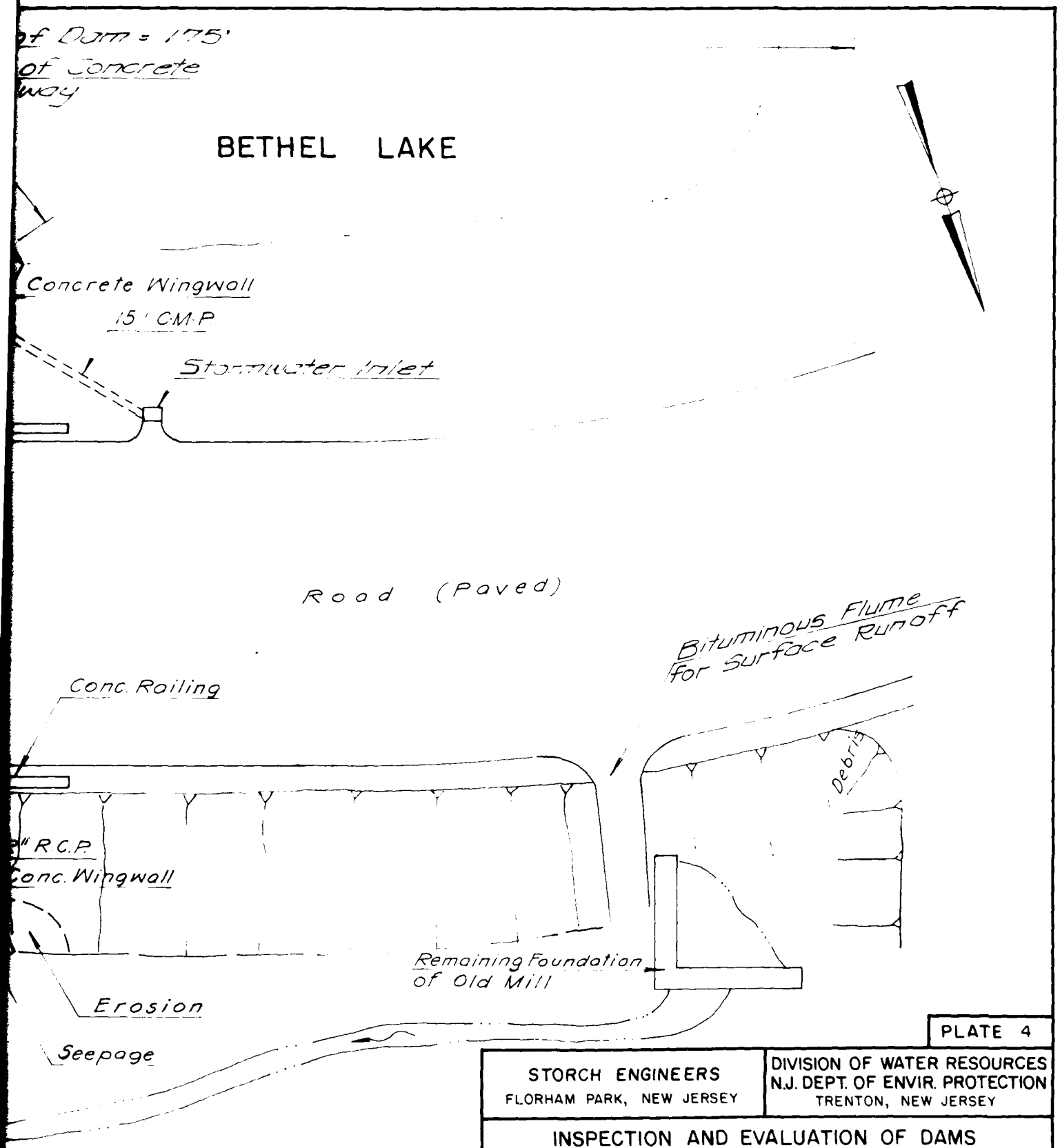

PLATE 4

STORCH ENGINEERS FLORHAM PARK, NEW JERSEY	DIVISION OF WATER RESOURCES N.J. DEPT. OF ENVIR. PROTECTION TRENTON, NEW JERSEY

INSPECTION AND EVALUATION OF DAMS

GENERAL PLAN

BETHEL LAKE DAM

I.D. N.J. 00406	SCALE: NOT TO SCALE
	DATE: FEB 1981

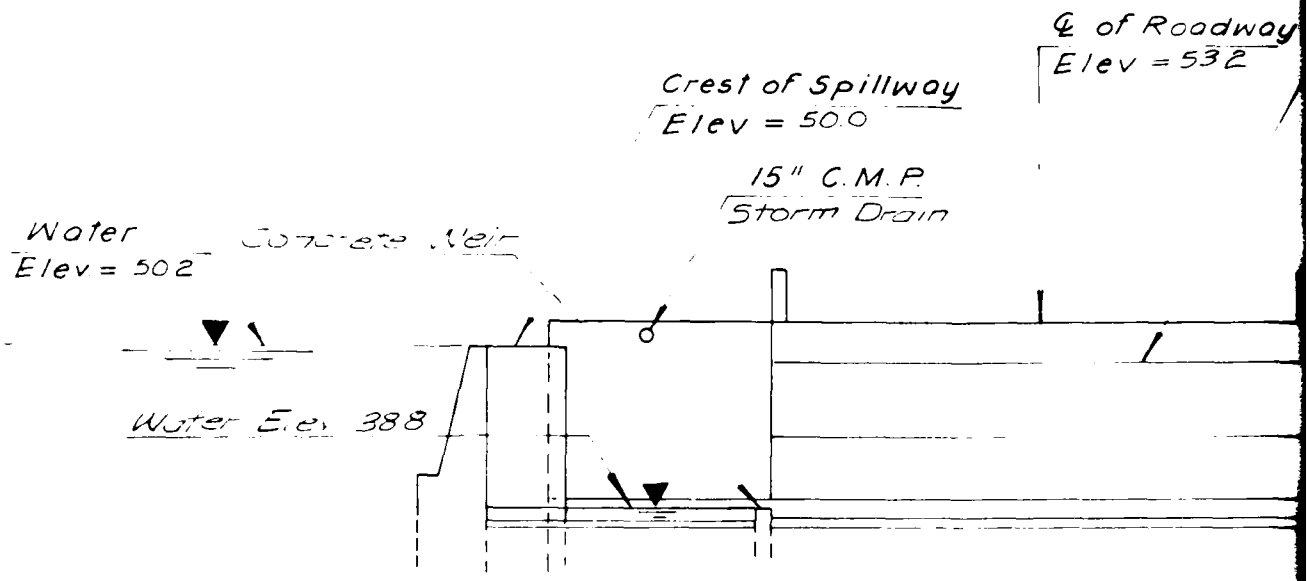

SPILLWAY SECTION

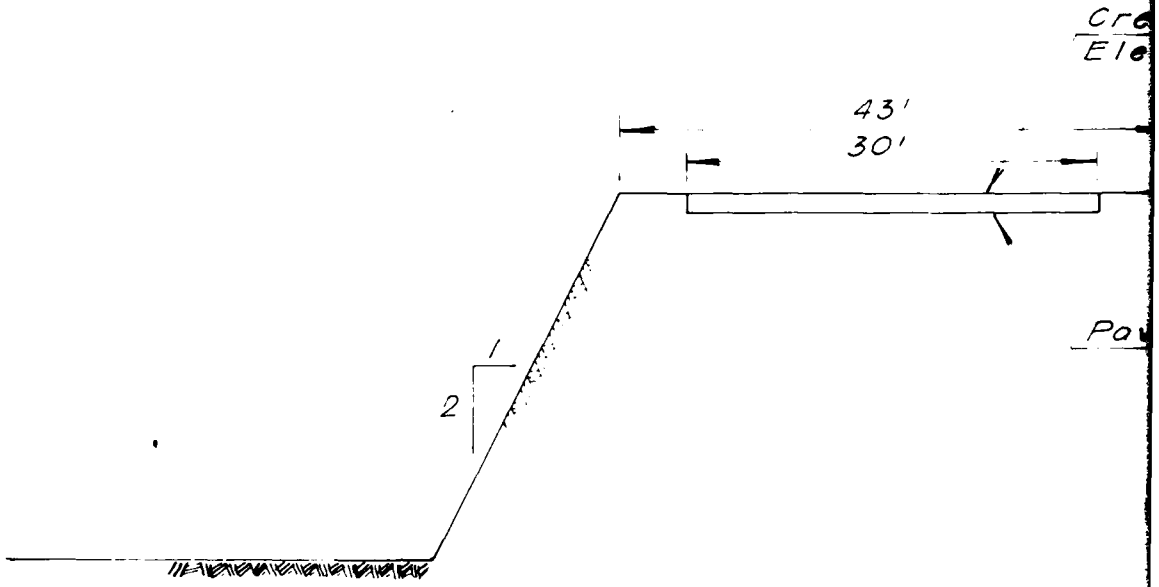

TYPICAL DAM SECTION

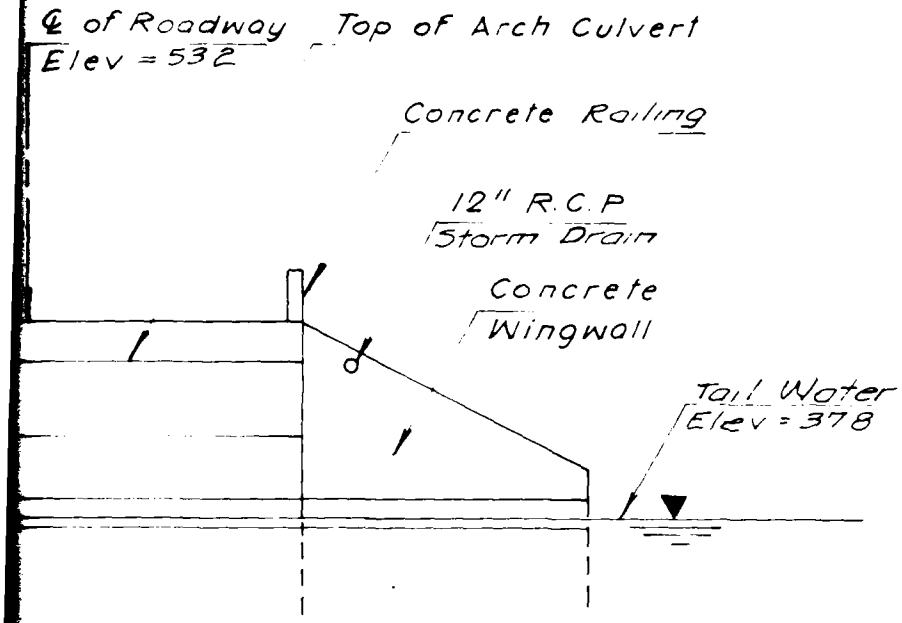

SECTION

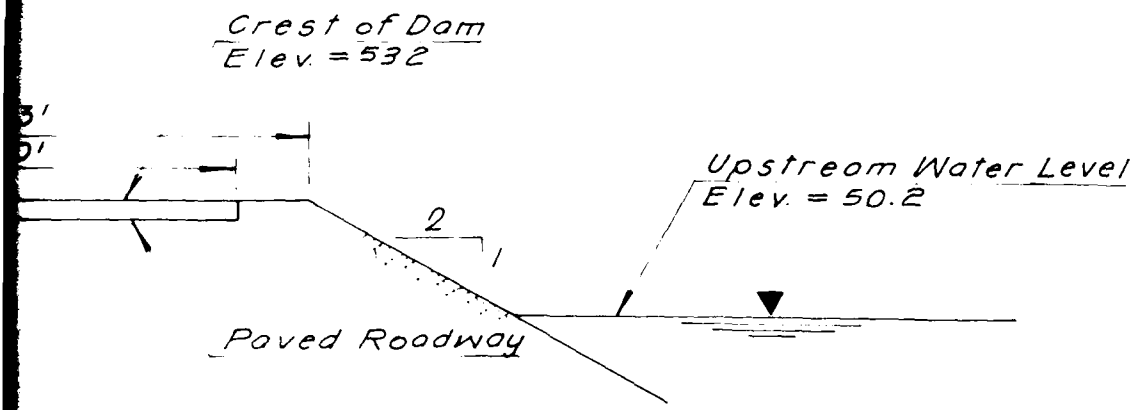

AM SECTION

PLATE 5

STORCH ENGINEERS FLORHAM PARK, NEW JERSEY	DIVISION OF WATER RESOURCES N.J. DEPT. OF ENVIR. PROTECTION TRENTON, NEW JERSEY

INSPECTION AND EVALUATION OF DAMS

SECTIONS

BETHEL LAKE DAM

ID N.J. 00406	SCALE: NOT TO SCALE
	DATE: FEB 1981

BETHEL LAKE

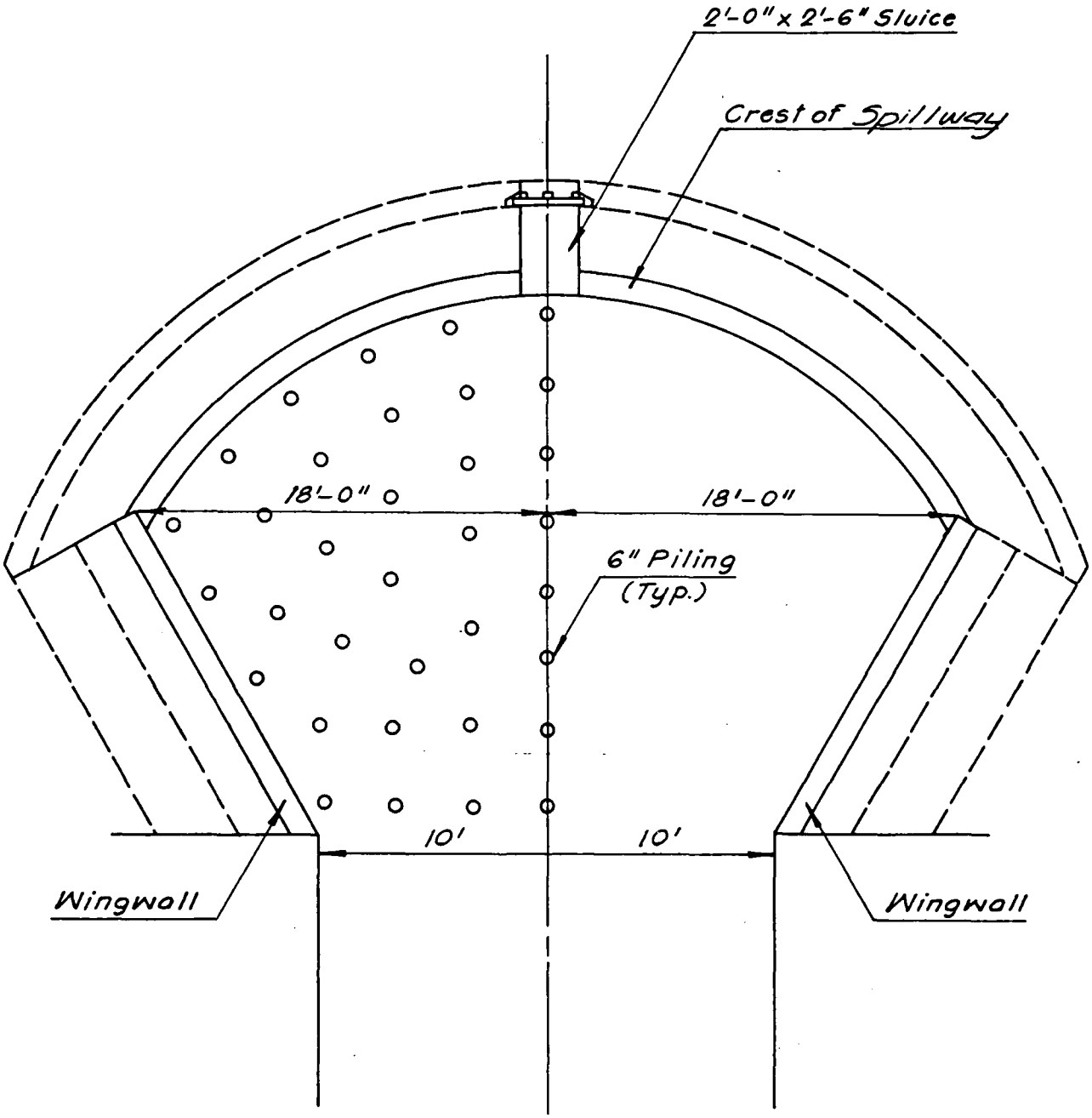

Note:
Information taken from Gloucester County plans "Concrete Dam to Join Bridge No. 5-J-6."

PLATE 6

STORCH ENGINEERS FLORHAM PARK, NEW JERSEY	INSPECTION AND EVALUATION OF DAMS SPILLWAY FOUNDATION PLAN BETHEL LAKE DAM
DIVISION OF WATER RESOURCES N.J. DEPT. OF ENVIR. PROTECTION TRENTON, NEW JERSEY	I.D. N.J. 00406 — SCALE: NONE DATE: MARCH, 1981

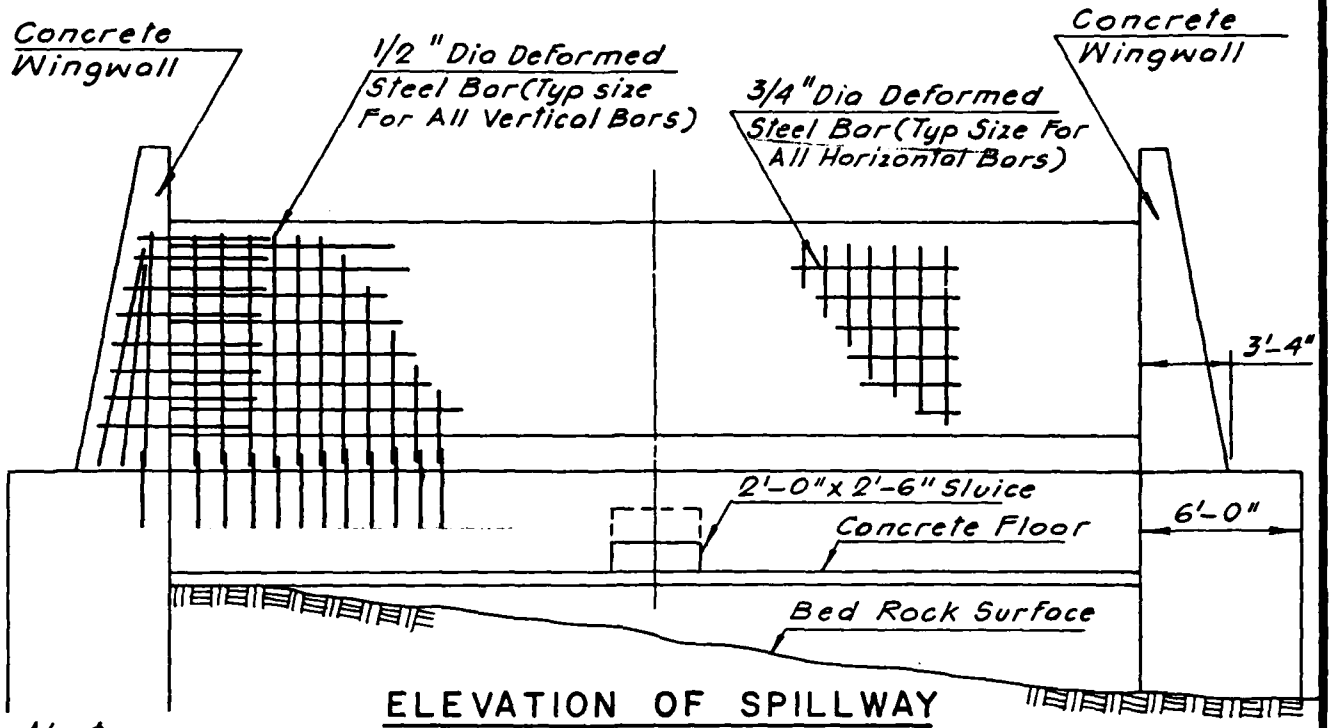

ELEVATION OF SPILLWAY

Note:
Information taken from Gloucester County plans "Concrete Dam to Join Bridge No. 5-J-6."

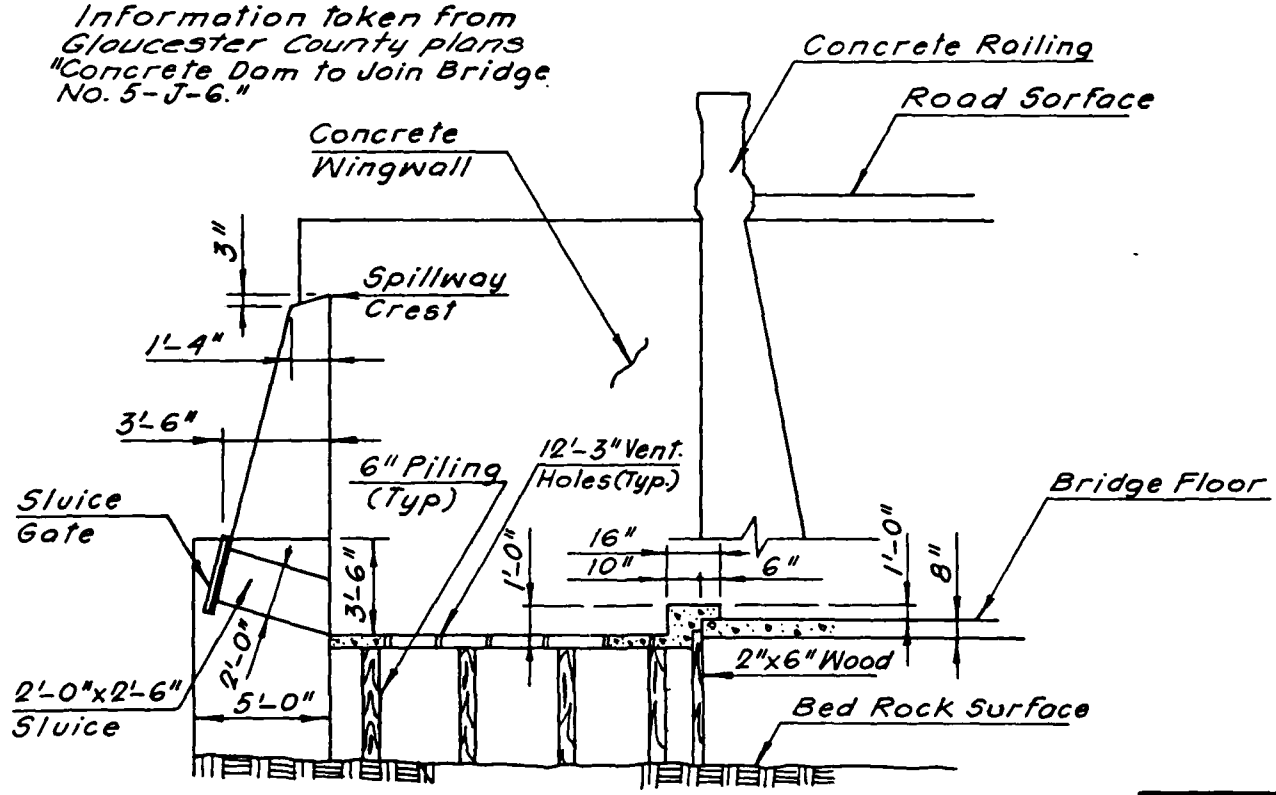

GENERAL SPILLWAY SECTION

PLATE 7

STORCH ENGINEERS FLORHAM PARK, NEW JERSEY	INSPECTION AND EVALUATION OF DAMS SPILLWAY BETHEL LAKE DAM
DIVISION OF WATER RESOURCES N.J. DEPT. OF ENVIR. PROTECTION TRENTON, NEW JERSEY	I.D. N.J. 00406 — SCALE: NONE DATE: MARCH, 1981

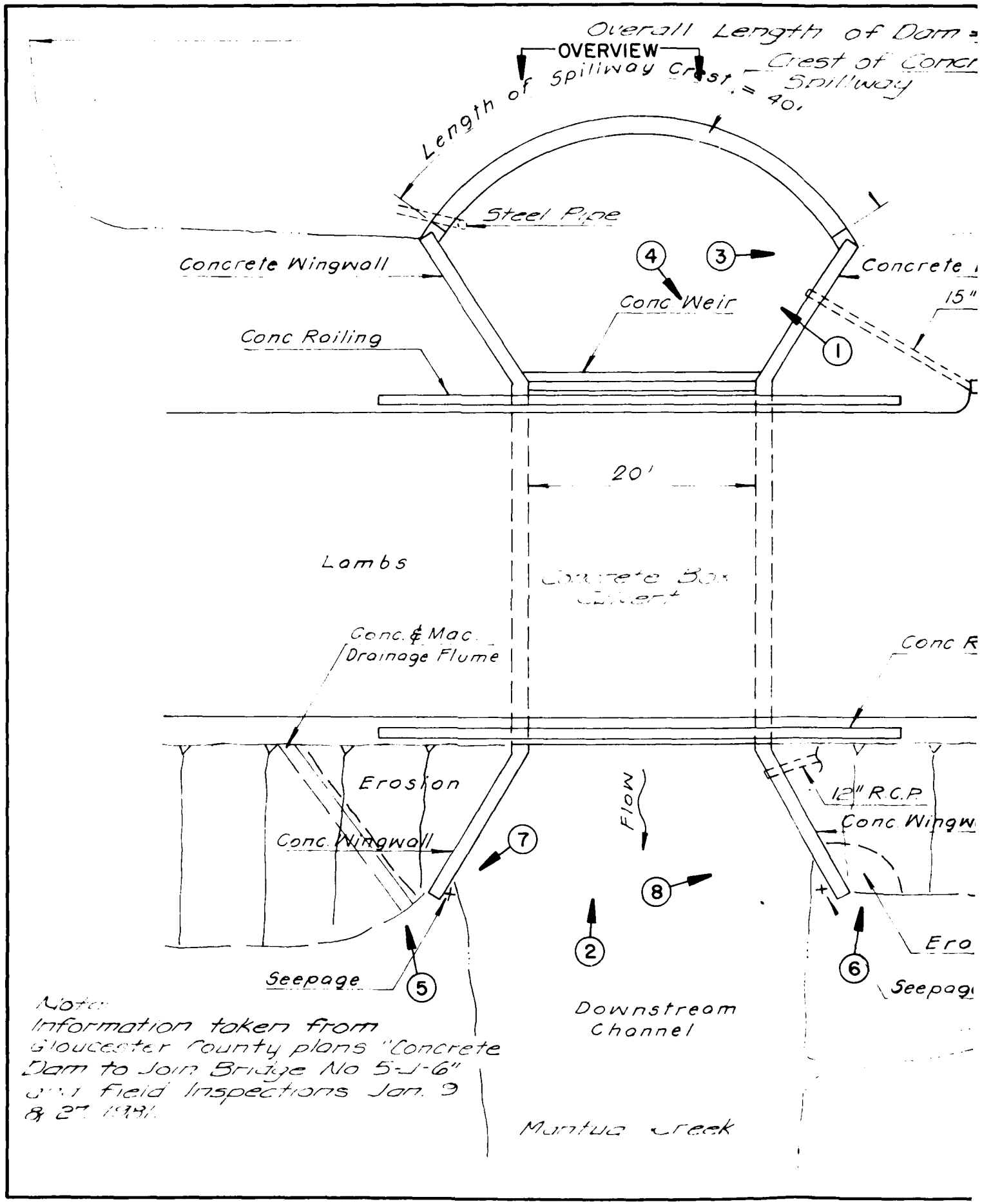
Overall Length of Dam =
OVERVIEW
Length of Spillway Crest = 40'
Crest of Concr
Spillway
Steel Pipe
Concrete Wingwall
Concrete
Conc Weir
15"
Conc Railing
20'
Lambs
Concrete Box Culvert
Conc. & Mac. Drainage Flume
Conc R
Erosion
Flow
12" R.C.P.
Conc Wingw
Conc Wingwall
Ero
Seepage
Seepag
Downstream Channel
Mantua Creek
Note:
Information taken from Gloucester County plans "Concrete Dam to Join Bridge No 5-J-6" and Field Inspections Jan. 9 & 27 1981.

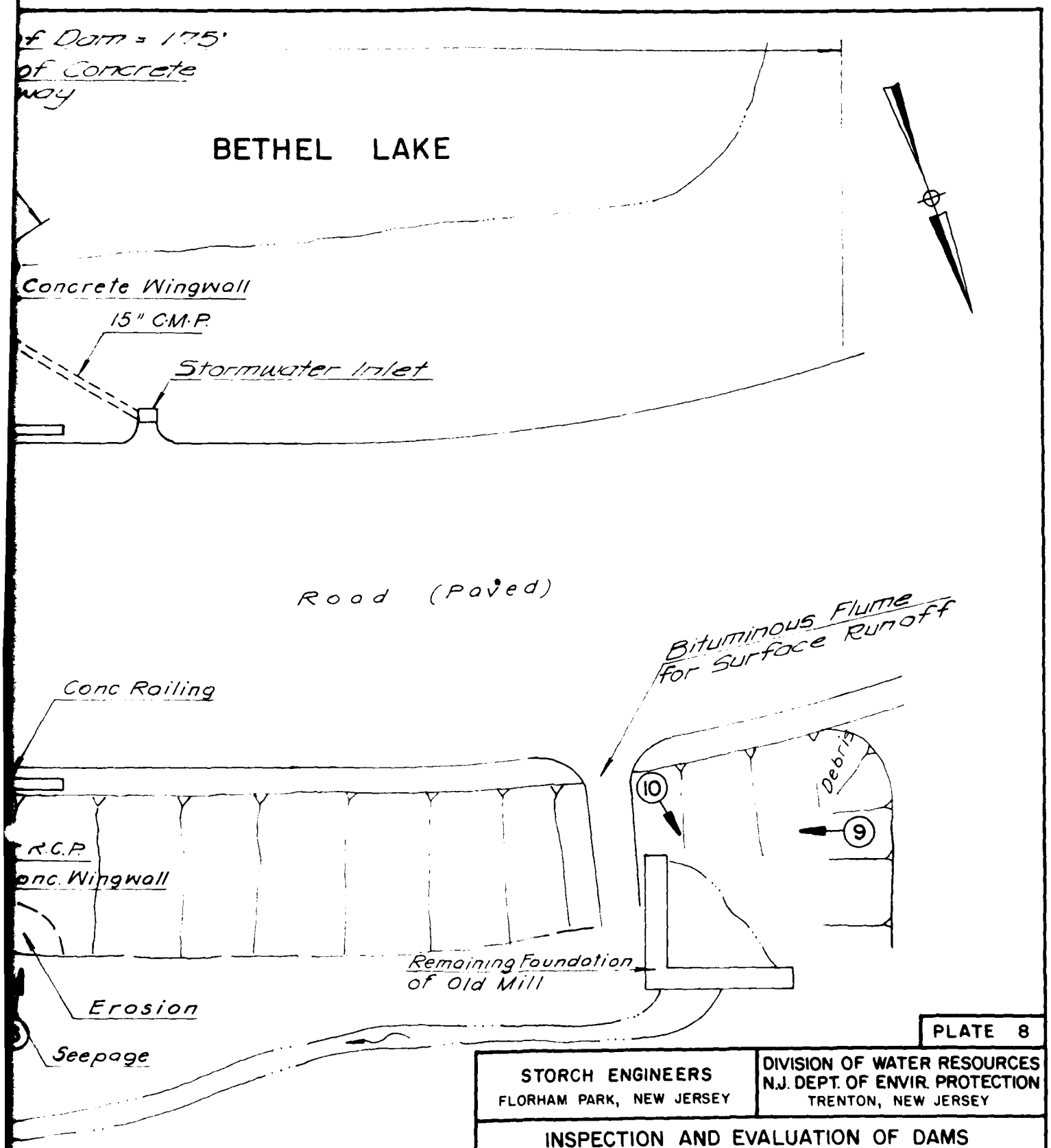

PLATE 8

STORCH ENGINEERS FLORHAM PARK, NEW JERSEY	DIVISION OF WATER RESOURCES N.J. DEPT. OF ENVIR. PROTECTION TRENTON, NEW JERSEY

INSPECTION AND EVALUATION OF DAMS

PHOTO LOCATION PLAN
BETHEL LAKE DAM

I.D. N.J. 00406	SCALE: NOT TO SCALE
	DATE: FEB. 1981

APPENDIX 1

Check List - Visual Inspection

Check List - Engineering Data

Check List

Visual Inspection

Phase I

Name of Dam Bethel Lake Dam County Gloucester State N.J. Coordinators NJDEP

Date(s) Inspection 1/9/81, 1/27/81 Weather Cloudy, P.Cloudy Temperature 25°F., 40°F.

Pool Elevation at time of Inspection 50.2 M.S.L. Tailwater at Time of Inspection 37.8 M.S.L.

Inspection Personnel:

John Gribbin
John Powanda
Richard McDermott
Daniel Buckelew
Charles Osterkorn
Mark Brady

John Gribbin Recorder

Owners' representative not present

EMBANKMENT

VISUAL EXAMINATION OF	OBSERVATIONS	REMARKS OR RECOMMENDATIONS
GENERAL	The paved roadway on the crest was in satisfactory condition. Weeds, briars and trees (1" to 6") located on embankment	Trees should be removed
JUNCTION OF EMBANKMENT AND ABUTMENT, SPILLWAY AND DAM	Appeared satisfactory	
ANY NOTICEABLE SEEPAGE	Seepage observed in 3 locations: 1.Downstream end of right bridge wingwall. Extensive orange colored deposits with water flowing with a trickle. 2.Orange colored deposits at downstream end of left bridge wingwall. 3.Stream containing orange colored deposits flowing from remains of stone masonry mill at left end of dam.	Seepage should be monitored
STAFF GAGE AND RECORDER	None observed	
DRAINS	Storm drains observed in bridge wingwalls. Weep holes in apron upstream from bridge could not be observed due to tailwater.	

EMBANKMENT

VISUAL EXAMINATION	OBSERVATIONS	REMARKS OR RECOMMENDATIONS
SURFACE CRACKS	None observed.	
UNUSUAL MOVEMENT OR CRACKING AT OR BEYOND THE TOE	Downstream face irregular in area of remains of mill. Embankment could be sloughing at that location.	The downstream face of the embankment should be regraded.
SLOUGHING OR EROSION OF EMBANKMENT AND ABUTMENT SLOPES	Possible sloughing noted at remains of mill. (See above.) Erosion noted on downstream side on each side of bridge wingwalls. Erosion on right side has caused the concrete surface runoff flume to become broken and displaced.	Eroded areas should be properly filled and stabilized.
VERTICAL AND HORIZONTAL ALIGNMENT OF THE CREST	Vertical: generally level. Horizontal: slightly curved.	
RIPRAP	None observed.	

OUTLET WORKS

VISUAL EXAMINATION OF	OBSERVATIONS	REMARKS OR RECOMMENDATIONS
CONCRETE SURFACES IN OUTLET CONDUIT	Sluice in spillway structure could not be observed due to overflow.	
INTAKE STRUCTURE	N.A.	
OUTLET STRUCTURE	N.A.	
OUTLET CHANNEL	Outlet discharges into stilling basin for spillway.	
GATE AND GATE HOUSING	Gate on upstream face of spillway structure submerged. Operating mechanism could not be observed.	Outlet should be investigated for operational adequacy.

SPILLWAY

VISUAL EXAMINATION OF	OBSERVATIONS	REMARKS OR RECOMMENDATIONS
WEIR	Crest of weir appeared to be in satisfactory condition. Weir obscured by overflow.	Spillway structure should be inspected during non-overflow condition.
APPROACH CHANNEL	N.A.	
DISCHARGE CHANNEL	Spillway discharges into pool (stilling basin) upstream from bridge. Bridge opening forms discharge channel downstream from stilling basin.	
BRIDGE	Concrete bridge with arch opening in overall satisfactory condition. Upstream wingwalls contain cracks and significant spalling, some spalling 4" to 6" deep. Exposed reinforcing appeared to have been placed too close to the surface when the concrete was originally poured.	Deteriorated concrete should be repairec

INSTRUMENTATION

VISUAL EXAMINATION OF	OBSERVATIONS	REMARKS OR RECOMMENDATIONS
MONUMENTATION/SURVEYS	None observed.	
OBSERVATION WELLS	None observed.	
WEIRS	None observed.	
PIEZOMETERS	None observed.	
OTHER		

RESERVOIR

VISUAL EXAMINATION OF	OBSERVATIONS	REMARKS OR RECOMMENDATIONS
SLOPES	Shore slopes generally moderate, about 5%. Shores generally wooded with grass area along right side near downstream end.	
SEDIMENTATION	Unknown.	
STRUCTURES ALONG BANKS	One homesite observed at downstream end on left side.	

DOWNSTREAM CHANNEL

VISUAL EXAMINATION OF	OBSERVATIONS	REMARKS OR RECOMMENDATIONS
CONDITION (OBSTRUCTION, DEBRIS, ETC.)	Natural meandering stream with low banks. Channel has generally narrow wooded flood plain for about 2500' downstream. No significant obstructions observed.	
SLOPES	Within 2500' slopes generally moderate, about 10%. Beyond 2500' channel has 500' wide swampy flood plain.	
STRUCTURES ALONG BANKS	One dwelling in vicinity of dam at about same elev. as dam crest. Road bridges located about 9000' and 10500' downstream. Also three dwellings located approximately 2 miles downstream from dam.	

CHECK LIST
ENGINEERING DATA
DESIGN, CONSTRUCTION, OPERATION

ITEM		REMARKS
DAM -	PLAN	Plan of embankment not available
	SECTIONS	
SPILLWAY -	PLAN	On file with NJDEP, Div. of Water Resources, plans entitled "Gloucester County, N. J., Concrete Dam to Join Bridge No. 5-J-6" prepared by A. B. Reno. NJDEP Division of Water Resources, P.O. Box CN-029, Trenton, New Jersey, 08625.
	SECTIONS	
	DETAILS	
OPERATING EQUIPMENT PLANS & DETAILS		Not Available
OUTLETS -	PLAN	Available in NJDEP file - Reno plans
	DETAILS	Same as above
	CONSTRAINTS	Not Available
	DISCHARGE RATINGS	On file with NJDEP
HYDRAULIC/HYDROLOGIC DATA		On File with NJDEP
RAINFALL/RESERVOIR RECORDS		Not Available
CONSTRUCTION HISTORY		On File with NJDEP
LOCATION MAP		On File with NJDEP

ITEM	REMARKS
DESIGN REPORTS	Not available
GEOLOGY REPORTS	Not available
DESIGN COMPUTATIONS HYDROLOGY & HYDRAULICS DAM INSTABILITY SEEPAGE STUDIES	On file with NJDEP
MATERIALS INVESTIGATIONS BORING RECORDS LABORATORY FIELD	Not available
POST-CONSTRUCTION SURVEYS OF DAM	Limited to inspection reports on file with NJDEP
BORROW SOURCES	Not available

ITEM	REMARKS
MONITORING SYSTEMS	Not available
MODIFICATIONS	Not available
HIGH POOL RECORDS	Reportedly dam overtopped by 1.5' during flood of Sept. 1, 1940, on file with NJDEP
POST CONSTRUCTION ENGINEERING STUDIES AND REPORTS	Limited to Structural Reports for Bridge 5-J-6 on file with Gloucester County and inspection reports on file with the NJDEP. Gloucester County Engineering Department, County Office Building, Delsea Drive, Clayton, New Jersey, 08312.
PRIOR ACCIDENTS OR FAILURE OF DAM DESCRIPTION REPORTS	Flood of Sept. 1, 1940 caused dam failure. Reports on file with NJDEP
MAINTENANCE OPERATION RECORDS	Not available

APPENDIX 2

Photographs

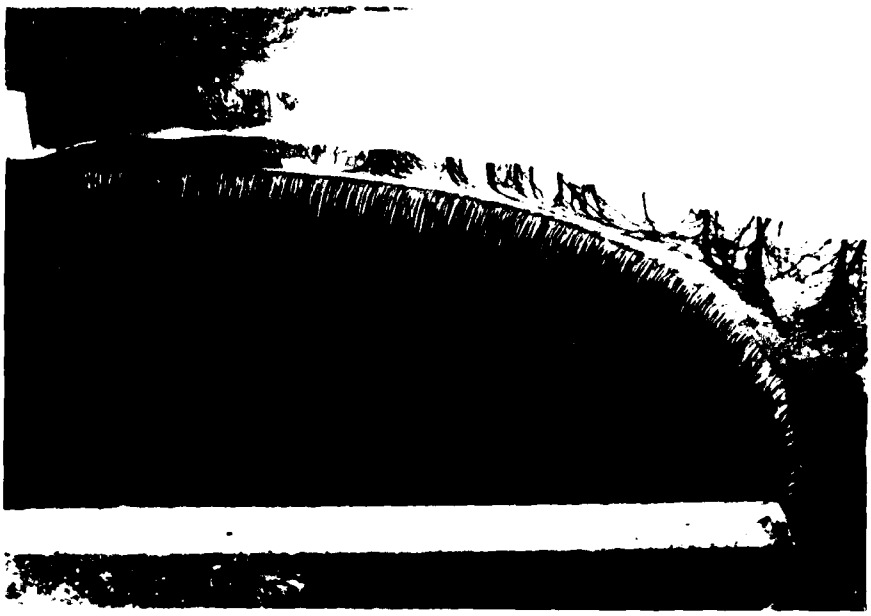

27 JANUARY 1981

PHOTO 1

SPILLWAY

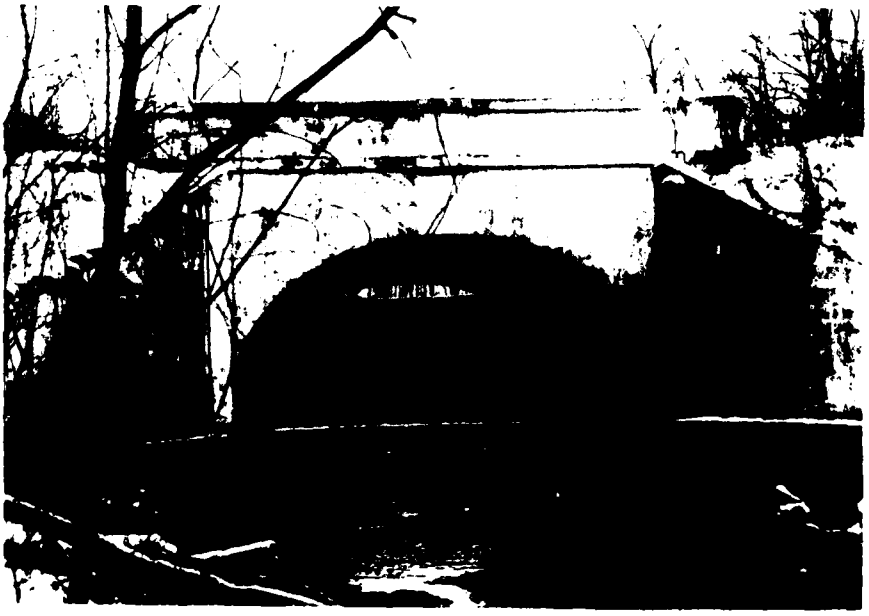

9 JANUARY 1981

PHOTO 2

DOWNSTREAM VIEW OF BRIDGE AND SPILLWAY

BETHEL LAKE DAM

27 JANUARY 1981

PHOTO 3

LEFT UPSTREAM WINGWALL SHOWING STORM DRAIN

9 JANUARY 1981

PHOTO 4

LEFT UPSTREAM WINGWALL AT BRIDGE OPENING

27 JANUARY 1981

PHOTO 5

EROSION AT DOWNSTREAM END OF RIGHT WINGWALL

9 JANUARY 1981

PHOTO 6

EROSION AT DOWNSTREAM END OF LEFT WINGWALL

BETHEL LAKE DAM

PHOTO 7 27 JANUARY 1981

SEEPAGE AT DOWNSTREAM END OF RIGHT WINGWALL

9 JANUARY 1981

PHOTO 8

SEEPAGE AT DOWNSTREAM END OF LEFT WINGWALL

BETHEL LAKE DAM

27 JANUARY 1981

PHOTO 9

DOWNSTREAM FACE OF DAM

9 JANUARY 1981

PHOTO 10
REMAINS OF STONE MASONRY STRUCTURE
WITH SEEPAGE IN BACKGROUND

BETHEL LAKE DAM

APPENDIX 3

Engineering Data

CHECK LIST

HYDROLOGIC AND HYDRAULIC DATA

ENGINEERING DATA

DRAINAGE AREA CHARACTERISTICS: Agriculture, residential

ELEVATION TOP NORMAL POOL (STORAGE CAPACITY): 50.2 (76 acre-feet)

ELEVATION TOP FLOOD CONTROL POOL (STORAGE CAPACITY): N.A.

ELEVATION MAXIMUM DESIGN POOL: 57.3

ELEVATION TOP DAM: 53.2

SPILLWAY CREST: Concrete Horseshoe-Shape

a. Elevation 50.0

b. Type Weir with inclined face

c. Width 1.3 ft.

d. Length 42.0 ft.

e. Location Spillover Upstream side of dam

f. Number and Type of Gates None

OUTLET WORKS:

a. Type 2'x2.5' gated sluice

b. Location spillway structure

c. Entrance Invert 38.7

d. Exit Invert 37.2

e. Emergency Draindown Facilities: Open gate

HYDOMETEOROLOGICAL GAGES: None

a. Type N.A.

b. Location N.A.

c. Records N.A.

MAXIMUM NON-DAMAGING DISCHARGE:

(Lake Stage Equal to Top of Dam) 800 c.f.s.

APPENDIX 4

Hydraulic/Hydrologic Computations

HYDROLOGY:

HYDROLOGIC ANALYSIS

THE RUNOFF HYDROGRAPH WILL BE DEVELOPED BY THE HEC-1-DAM COMPUTER PROGRAM USING THE SCS UNIT HYDROGRAPH WITH CURVILINEAR TRANSFORMATION.

DRAINAGE AREA - 8.0 SQMI

INFILTRATION DATA

INITIAL INFILTRATION = 1.5 IN

CONSTANT INFILTRATION = 0.15 IN/HOUR

TIME OF CONCENTRATION

1. [by SCS - TR 55]

OVERLAND FLOW:

LENGTH	=	3000	[Ft]
AVE SLOPE	=	0.9	[%]
$\Delta H = 162' - 135' = 27'$			
AVE. VELOCITY	=	0.24	[Fps]

CHANNEL FLOW:

LENGTH	=	21000	[Ft]
AVE. SLOPE			
$\Delta H = 135 - 47 = 88$	=	0.4	[%]
AVE VELOCITY	=	4.2	[Fps]

$$T_C = \left[\left(\frac{3000}{0.24}\right) + \left(\frac{21000}{4.2}\right)\right]\frac{1}{3600} = 3.5 + 1.4$$

$$T_C = 4.9 \text{ Hr}$$

2. ['Handbook of applied hydrology' by Chow - Pg. 14-26]

$$T_C = \sqrt[2.14]{\tfrac{2}{3} L \eta / \sqrt{S}}$$

$$T_C = \sqrt[2.14]{\frac{\tfrac{2}{3}(3000 \times 0.4)}{\sqrt{0.009}}}$$

$$T_C = 68 \text{ min} \times \frac{1}{60}$$

$$T_C = 1.13 + 1.4 = 2.43 \text{ Hr}$$

T_C = time of concentration [min]
S = slope [%]
η = 0.4 roughness coefficient
L = length of overland flow [Ft]

3. [by 'Design of small dams' Pg 71]

$$T_c = \left(\frac{11.9(L)^3}{H}\right)^{0.385}$$

$$T_c = \left(\frac{11.9 \times (4.55)^3}{115}\right)^{0.385}$$

$$\underline{\underline{T_c = 2.4 \text{ Hr}}}$$

T_c = Time of concentration [Hr]

L = longest water course [Mi]

H = elev. difference [Ft]

L = 4.55 Mi

H = 115 Ft

COMPUTER INPUT

T_c = 3.7 Hr. LAG = 60 %

$$\underline{\underline{\text{LAG Time} = 2.2 \text{ Hr}}}$$

PRECIPITATION:

24 HOURS, 100-YEAR RAINSTORM DISTRIBUTION FOR BETHEL LAKE DAM

TIME [Hr]	RAIN [IN]
1	.08
2	.08
3	.08
4	.08
5	.08
6	.08
7	.09
8	.09
9	.18
10	.18
11	.18
12	.19
13	.30
14	.30
15	.80
16	3.00
17	.40
18	.30
19	.19
20	.18
21	.09
22	.09
23	.08
24	.08
24 [Hr]	Σ 7.2 [IN]

From U.S. WEATHER BUREAU TP 40

LAKE STORAGE VOLUME

W.S. ELEV. [Ft]	AREA [Acres]
37.2	0
50.2	17.5
60.0	59.7
70.0	113.0

HEC-1-DAM COMPUTER PROGRAM WILL DEVELOP STORAGE CAPACITY FROM WATER SURFACE AREAS AND ELEVATIONS. INFORMATION TAKEN FROM U.S.G.S. QUADRANGLE WOODBURY, RUNNEMEDE, PITMAN WEST & EAST, N.J.

HYDRAULICS

SPILLWAY SECTION

THE SPILLWAY AT THE BETHEL LAKE DAM IS A CONCRETE HORSESHOE FREE OVERFLOW SPILLWAY WITH A WEIR OF TRAPEZIODAL SECTION. THE EFFECTIVE LENGTH OF CREST IS 42.0 FEET AT ELEV. 50.0 FEET.

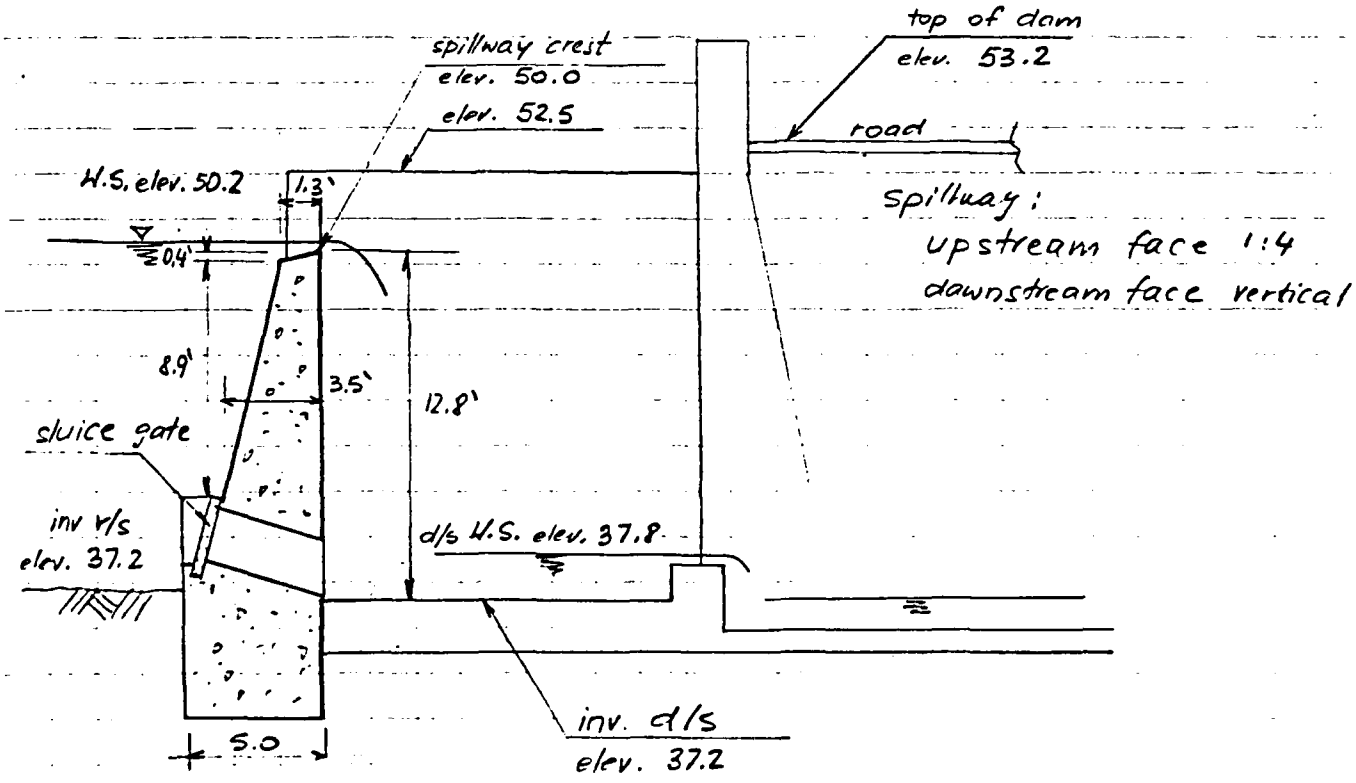

DISCHARGE CALCULATION

[Handbook of hydraulics Pg 5-26]

DISCHARGE WILL BE CALCULATED USING FORMULA

$$Q = C L H^{\frac{3}{2}}$$

Q = discharge [cfs]
C = coefficient of discharge
L = effective length of spillway [Ft]
H = total head on spillway [Ft]

SPILLWAY STAGE DISCHARGE TABULATION

H.S. ELEVATION [Ft]	spillway H [Ft]	L = 42.0 Ft. C	Q [cfs]
50.0	0	0	0
50.2	0.2	3.21	12
50.7	0.7	3.25	80
51.2	1.2	3.47	191
51.7	1.7	3.46	322
52.2	2.2	3.42	468
52.5	2.5	3.35	556
53.2	3.2	3.33	800
53.7	3.7	3.36	1000
54.2	4.2	3.39	1225
54.7	4.7	3.41	1459
55.2	5.2	3.45	1718

STORCH ENGINEERS

Sheet 8 of 10

Project 1132-06 BETHEL LAKE DAM Made By JiHa Date 3-17-81

Chkd By JG Date 4/3/81

SPILLWAY
STAGE DISCHARGE CURVE

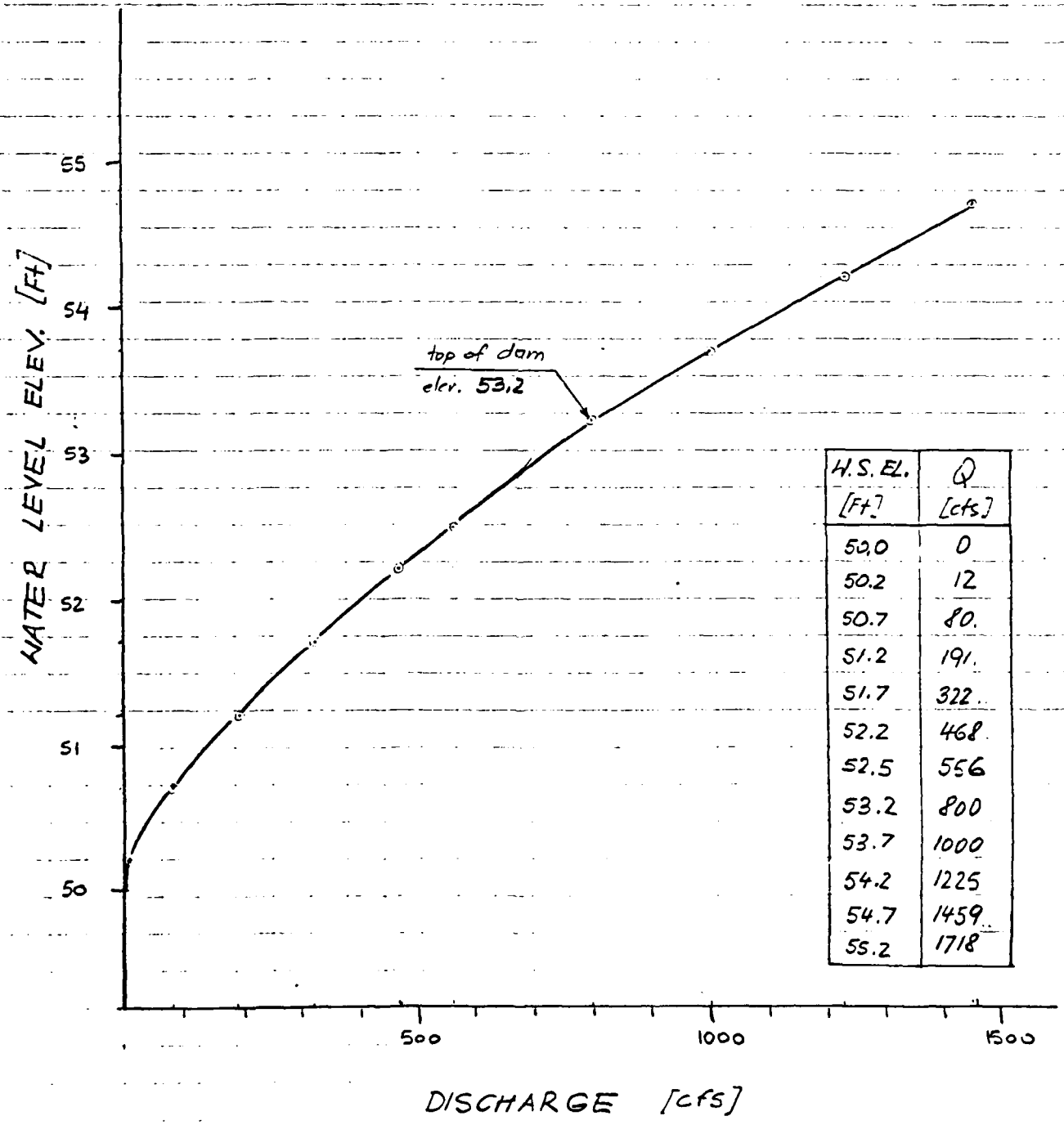

H.S.EL. [Ft]	Q [cfs]
50.0	0
50.2	12
50.7	80.
51.2	191.
51.7	322.
52.2	468.
52.5	556
53.2	800
53.7	1000
54.2	1225
54.7	1459
55.2	1718

DRAWDOWN

[by 'Handbook of hydraulics' Pg 4-3]

THE DISCHARGE OF DRAWDOWN WILL BE CALCULATED FOR A SHARP-EDGED RECTANGULAR ORIFICE

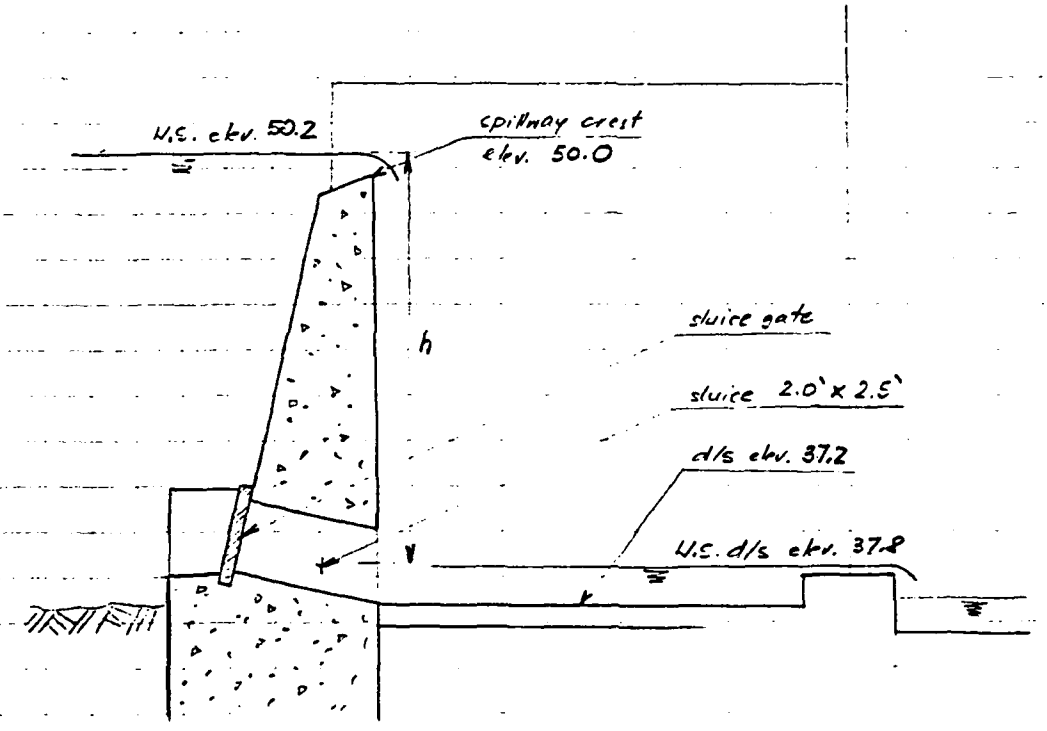

USING FORMULA

$Q = Ca\sqrt{2gh}$

$a = 5.0\ ft^2$
$C = 0.6$
Aver. $h = 6.0'$

$Q = 0.6 \times 5\sqrt{2 \times 32.2 \times 6}$

$Q = 59$ cfs

Q = discharge [cfs]
C = coefficient of discharge
a = area of discharge [Ft²]
h = head to centroid [Ft]
g = 32.2

TIME OF DRAWDOWN

$$T_d = \frac{\text{Storage [Acft]}}{\text{Ave. Discharge - Inflow [cfs]}} \times \frac{43560}{3600}$$

Assume inflow = 12.0 cfs

$$T_d = \frac{76}{59 - 12.0} \times \frac{43560}{3600}$$

$$T_d = \underline{\underline{19.6 \text{ Hr}}}$$

HEC - 1 - DAM PRINTOUT

Overtopping Analysis

```
1A1                         NATIONAL DAM SAFETY PROGRAM
A2                          BETHEL LAKE DAM, NEW JERSEY
A3                          100 YEAR STORM ROUTING
B     300       0      15                                          4
B1      5
J       1       1       1
J1      1
K       0    LAKE                                          1
K1                          INFLOW HYDROGRAPH TO BETHEL LAKE DAM
M       0       2     8.0             8.0                         1
O      96
O1  0.019   0.019   0.019   0.019   0.019   0.019   0.019   0.019   0.019   0.019
O1  0.019   0.019   0.019   0.019   0.019   0.019   0.019   0.019   0.019   0.019
O1  0.019   0.019   0.019   0.019   0.019   0.019   0.019   0.019   0.019   0.019
O1  0.019   0.019   0.019   0.019   0.019   0.019   0.019   0.019   0.019   0.019
O1  0.019   0.019   0.019   0.019   0.019   0.019   0.019   0.019   0.038   0.038
O1  0.038   0.038   0.038   0.038   0.038   0.038   0.038   0.038   0.038   0.038
O1  0.083   0.083   0.083   0.083   0.163   0.163   0.163   0.163   0.750   0.750
O1  0.750   0.750   0.163   0.163   0.163   0.163   0.083   0.083   0.083   0.083
O1  0.083   0.083   0.083   0.083   0.038   0.038   0.038   0.038   0.038   0.038
O1  0.038   0.038   0.038   0.038   0.038   0.038
T                                                       1.5    0.15
W2          2.2
X    -1.0  -0.05     2.0
K       1     DAM
K1                          ROUTE DISCHARGE THROUGH DAM
Y                                   1       1
Y1                                                     -50.2      -1
Y4   50.0    50.2    50.7    51.2    51.7    52.2    52.5    53.2    53.7    54.2
Y4   54.7    55.2
Y5      0      12      80     191     322     468     556     800    1000    1225
Y5   1459    1718
$A      0    17.5    59.7   113.0
$E   37.2    50.2    60.0    70.0
$$   50.0
$D   53.2     2.7     1.5     130
K       1       1                                       1
K1                          CHANNEL ROUTING REACH 1
Y                                   1       1
Y1      1
Y6    0.1    0.04     0.1      33      55     500  0.0084
Y7      0      55      80      35     100      34     101      33     111      33
Y7    112      34     150      35     215      51
K       1       2                                       1
K1                          CHANNEL ROUTING REACH 2
Y                                   1       1
Y1      1
Y6    0.1    0.04     0.1      28      50    1100  0.0045
Y7      0      50      60      40     160      30     162      28     172      28
Y7    174      30     424      40     524      50
K       1       3                                       1
K1                          CHANNEL ROUTING REACH 3
Y                                   1       1
Y1      1
Y6    0.1   0.035     0.1      20      50    4400  0.0018
Y7      0      50      50      30     350      22     355      20     365      20
Y7    370      22     670      30     750      50
K      99
```

NATIONAL DAM SAFETY PROGRAM
BETHEL LAKE DAM, NEW JERSEY
100 YEAR STORM ROUTING

JOB SPECIFICATION

NQ	NHR	NMIN	IDAY	IHR	IMIN	METRC	IPLT	IPRT	NSTAN
300	0	15	0	0	0	0	0	4	0
			JOPER	NWT	LROPT	TRACE			
			5	0	0	0			

MULTI-PLAN ANALYSES TO BE PERFORMED
NPLAN= 1 NRTIO= 1 LRTIO= 1

RTIOS= 1.00

********** ********** ********** ********** **********

SUB-AREA RUNOFF COMPUTATION

INFLOW HYDROGRAPH TO BETHEL LAKE DAM

ISTAQ	ICOMP	IECON	ITAPE	JPLT	JPRT	INAME	ISTAGE	IAUTO
LAKE	0	0	0	0	0	1	0	0

HYDROGRAPH DATA

IHYDG	IUHG	TAREA	SNAP	TRSDA	TRSPC	RATIO	ISNOW	ISAME	LOCAL
0	2	8.00	0.00	8.00	0.00	0.000	0	1	0

LOSS DATA

LROPT	STRKR	DLTKR	RTIOL	ERAIN	STRKS	RTIOK	STRTL	CNSTL	ALSMX	RTIMP
0	0.00	0.00	1.00	0.00	0.00	1.00	1.50	.15	0.00	0.00

UNIT HYDROGRAPH DATA
TC= 0.00 LAG= 2.20

RECESSION DATA
STRTQ= -1.00 QRCSN= -.05 RTIOR= 2.00

0

END-OF-PERIOD FLOW

MO.DA	HR.MN	PERIOD	RAIN	EXCS	LOSS	COMP Q	MO.DA	HR.MN	PERIOD	RAIN	EXCS	LOSS	COMP Q
									SUM	7.12	4.33	2.79	92187.
										(181.)	(110.)	(71.)	(2610.45)

HYDROGRAPH ROUTING

ROUTE DISCHARGE THROUGH DAM

ISTAQ	ICOMP	IECON	ITAPE	JPLT	JPRT	INAME	ISTAGE	IAUTO
DAM	1	0	0	0	0	0	0	0

ROUTING DATA

QLOSS	CLOSS	AVG	IRES	ISAME	IOPT	IPMP	LSTR
0.0	0.000	0.00	1	1	0	0	0

NSTPS	NSTDL	LAG	AMSKK	X	TSK	STORA	ISPRAT
0	0	0	0.000	0.000	0.000	-50.	-1

STAGE	50.00	50.20	50.70	51.20	51.70	52.20	52.50	53.20	53.70	54.20
	54.70	55.20								
FLOW	0.00	12.00	80.00	191.00	322.00	468.00	556.00	800.00	1000.00	1225.00
	1459.00	1718.00								

SURFACE AREA=	0.	18.	60.	113.
CAPACITY=	0.	76.	434.	1283.
ELEVATION=	37.	50.	60.	70.

CREL	SPWID	COQW	EXPW	ELEVL	COOL	CAREA	EXPL
50.0	0.0	0.0	0.0	0.0	0.0	0.0	0.0

DAM DATA

TOPEL	COQD	EXPD	DAMWID
53.2	2.7	1.5	130.

PEAK OUTFLOW IS 5643. AT TIME 20.25 HOURS

PEAK FLOW AND STORAGE (END OF PERIOD) SUMMARY FOR MULTIPLE PLAN-RATIO ECONOMIC COMPUTATIONS
FLOWS IN CUBIC FEET PER SECOND (CUBIC METERS PER SECOND)
AREA IN SQUARE MILES (SQUARE KILOMETERS)

OPERATION	STATION	AREA	PLAN	RATIOS APPLIED TO FLOWS RATIO 1 1.00
HYDROGRAPH AT	LAKE	8.00 (20.72)	1	5836. (165.25)(
ROUTED TO	DAM	8.00 (20.72)	1	5643. (159.79)(
ROUTED TO	1	8.00 (20.72)	1	5648. (159.94)(
ROUTED TO	2	8.00 (20.72)	1	5647. (159.89)(
ROUTED TO	3	8.00 (20.72)	1	5337. (151.12)(

SUMMARY OF DAM SAFETY ANALYSIS

PLAN 1 .....

	INITIAL VALUE	SPILLWAY CREST	TOP OF DAM
ELEVATION	50.20	50.00	53.20
STORAGE	76.	72.	143.
OUTFLOW	12.	0.	800.

RATIO OF PMF	MAXIMUM RESERVOIR W.S.ELEV	MAXIMUM DEPTH OVER DAM	MAXIMUM STORAGE AC-FT	MAXIMUM OUTFLOW CFS	DURATION OVER TOP HOURS	TIME OF MAX OUTFLOW HOURS	TIME OF FAILURE HOURS
1.00	57.25	4.05	290.	5643.	6.50	20.25	0.00

PLAN 1 STATION 1

RATIO	MAXIMUM FLOW,CFS	MAXIMUM STAGE,FT	TIME HOURS
1.00	5648.	43.4	20.25

PLAN 1 STATION 2

RATIO	MAXIMUM FLOW,CFS	MAXIMUM STAGE,FT	TIME HOURS
1.00	5647.	39.0	20.25

PLAN 1 STATION 3

RATIO	MAXIMUM FLOW,CFS	MAXIMUM STAGE,FT	TIME HOURS
1.00	5337.	29.9	20.75

APPENDIX 5

Bibliography

1. "Recommended Guidelines for Safety Inspection of Dams," Department of the Army, Office of the Chief of Engineers, Washington, D.C. 20314.

2. Design of Small Dams, Second Edition, United States Department of the Interior, Bureau of Reclamation, United State Government Printing Office, Washington, D.C., 1973.

3. Holman, William W. and Jumikis, Alfreds R., Engineering Soil Survey of New Jersey, Report No. 16, Gloucester County, Rutgers University, New Brunswick, N.J., 1953.

4. "Geologic Map of New Jersey," prepared by J. Volney Lewis and Henry B. Kummel, dated 1910-1912, revised by H.B. Kummel, 1931 and M. Johnson, 1950.

5. Chow, Ven Te., Ed., Handbook of Applied Hydrology, McGraw-Hill Book Company, 1964.

6. Herr, Lester A., Hydraulic Charts for the Selection of Highway Culverts, U.S. Department of Transportation, Federal Highway Administration, 1965.

7. Safety of Small Dams, Proceedings of the Engineering Foundation Conference, American Society of Civil Engineers, 1974.

8. King, Horace Williams and Brater, Ernest F., Handbook of Hydraulics, Fifth Edition, McGraw-Hill Book Company, 1963.

9. Urban Hydrology for Small Watersheds, Technical Release No. 55, Engineering Division, Soil Conservation Service, U.S. Department of Agriculture, January 1975.

DATE
FILMED
-8