LEVEL II

(2)

(19) AFWAL (17) TR-80-4183

AD A097049

(6) ADHESIVE BONDING FOR SHELTERS.

(10) D. Robert/Askins [redacted] James C./McKiernan

UNIVERSITY OF DAYTON RESEARCH INST[redacted]E
300 COLLEGE PARK AVENUE
DAYTON, OHIO 45469

DTIC
ELECTE
MAR 3 1 1981
E

(11) DEC[redacted]80 (12) 113 (14) UDR-TR-[illegible]

INTERIM TECHNICAL REPORT DECEMBER 1977 - AUGUST 1980
(9) (Final Summary Report, on Shelter Adhesive Program)

Approved for public release; distribution unlimited.

(15) F33615-[illegible] (16) 2421
[illegible] (17) P3

DTIC FILE COPY

MATERIALS LABORATORY
AIR FORCE WRIGHT AERONAUTICAL LABORATORIES
AIR FORCE SYSTEMS COMMAND
WRIGHT-PATTERSON AIR FORCE BASE, OHIO 45433

81 3 30 099

Best
Available
Copy

NOTICE

When Government drawings, specifications, or other data are used for any purpose other than in connection with a definitely related Government procurement operation, the United States Government thereby incurs no responsibility nor any obligation whatsoever; and the fact that the Government may have formulated, furnished, or in any way supplied the said drawings, specifications, or other data, is not to be regarded by implication or otherwise as in any manner licensing the holder or any other person or corporation, or conveying any rights or permission to manufacture, use, or sell any patented invention that may in any way be related thereto.

This report has been reviewed by the Office of Public Affairs (PA) and is releasable to the National Technical Information Service (NTIS). At NTIS, it will be available to the general public, including foreign nations.

This technical report has been reviewed and is approved for publication.

JOHN R. RHODEHAMEL	A. OLEVITCH, Chief
Project Engineer	Nonmetals Engineering Branch
Nonmetals Engineering Branch	Systems Support Division

If your address has changed, if you wish to be removed from our mailing list, or if the addressee is no longer employed by your organization, please notify AFWAL/MLSE W-PAFB, OH 45433 to help us maintain a current mailing list.

Copies of this report should not be returned unless return is required by security considerations, contractual obligations, or notice on a specific document.

AIR FORCE/56780/24 March 1981 — 300

UNCLASSIFIED

SECURITY CLASSIFICATION OF THIS PAGE (When Data Entered)

REPORT DOCUMENTATION PAGE

READ INSTRUCTIONS BEFORE COMPLETING FORM

1. REPORT NUMBER: AFWAL-TR-80-4183

2. GOVT ACCESSION NO.: AD-A097 049

3. RECIPIENT'S CATALOG NUMBER:

4. TITLE (and Subtitle): ADHESIVE BONDING FOR SHELTERS

5. TYPE OF REPORT & PERIOD COVERED: Interim Technical Report December 1977-August 1980

6. PERFORMING ORG. REPORT NUMBER: UDR-TR-80-88

7. AUTHOR(s): D. R. Askins and James C. McKiernan

8. CONTRACT OR GRANT NUMBER(s): F33615-80-C-5011, F33615-78-C-5002

9. PERFORMING ORGANIZATION NAME AND ADDRESS: University of Dayton Research Institute, 300 College Park Avenue, Dayton, Ohio 45469

10. PROGRAM ELEMENT, PROJECT, TASK AREA & WORK UNIT NUMBERS: 24210315

11. CONTROLLING OFFICE NAME AND ADDRESS: Air Force Wright Aeronautical Laboratories/ Materials Laboratory (AFWAL/ML), Wright-Patterson AFB, Ohio 45433

12. REPORT DATE: December 1980

13. NUMBER OF PAGES: 112

14. MONITORING AGENCY NAME & ADDRESS (if different from Controlling Office):

15. SECURITY CLASS. (of this report): Unclassified

15a. DECLASSIFICATION/DOWNGRADING SCHEDULE:

16. DISTRIBUTION STATEMENT (of this Report): Approved for public release; distribution unlimited.

17. DISTRIBUTION STATEMENT (of the abstract entered in Block 20, if different from Report):

18. SUPPLEMENTARY NOTES:

19. KEY WORDS (Continue on reverse side if necessary and identify by block number)

Adhesive	Lap Shear	Primer
Bond	Peel	Crack Extension
Durability	Stress-Durability	Metal Etching
Environmental Aging	Failure Mode	Shelter Panel
Modified Epoxy	Surface Preparation	

20. ABSTRACT (Continue on reverse side if necessary and identify by block number)

As a result of work done over the past several years with adhesives in general and shelter adhesives in particular, a testing scheme for evaluating candidate shelter adhesives has been developed and generally accepted by the shelter industry. This includes agreement upon the types of tests, test conditions, and test specimens which will be utilized to evaluate candidate adhesives.

(Continued on other side)

DD FORM 1 JAN 73 1473 EDITION OF 1 NOV 65 IS OBSOLETE

UNCLASSIFIED

SECURITY CLASSIFICATION OF THIS PAGE (When Data Entered)

The work undertaken in this program was aimed at identifying adhesives which have the capability of retaining a substantial portion of their structural integrity after prolonged exposure to the combined effects of elevated temperature and high humidity, and also to evaluate the effects of several adherend surface preparation variables upon the interfacial durability of bonded joints.

Seven adhesives were evaluated for their lap shear, peel, and stress-durability characteristics. No single adhesive ranked high in all categories but a relative ranking of the adhesives was developed, based on their relative performance in all of the tests.

Two surface preparation variables were evaluated, the type of etch bath "sweetener" and the type of rinse water used. The type of etch bath "sweetener" was found to have a dramatic effect on interfacial durability, with the copper containing 2024 alloy required regardless of the alloy being etched. The difference between rinsing with tap water and deionized water was marginal.

PREFACE

This report covers work performed during the period from December 1977 to August 1980 under Air Force Contract Nos. F33615-78-C-5002 and F33615-80-C-5011, Project 7381. The work was administered under the direction of the Systems Support Division of the Air Force Materials Laboratory, Wright Aeronautical Laboratories, Wright-Patterson Air Force Base, Ohio. Mr. John Rhodehamel (AFWAL/MLSE) was the Program Project Engineer.

The Principal Investigators on this program were D. Robert Askins and Ronald J. Kuhbander. The major portion of the laboratory work was conducted by Messrs. James McKiernan (specimen fabrication and data documentation) and Donald Byrge (testing).

This report was submitted by the author in October 1980. The contractor's report number is UDR-TR-80-88.

Accession For
NTIS GRA&I X
DTIC TAB
Unannounced
Justification
By
Distribution/
Availability Codes
Dist | Avail and/or Special
A

TABLE OF CONTENTS

SECTION		PAGE
1	BACKGROUND AND INTRODUCTION	1
2	APPROACH	3
	2.1 MATERIALS AND PROCESSES	3
	2.2 SPECIMEN FABRICATION PROCEDURES	5
	2.3 TEST METHODS AND EXPERIMENTAL DESIGN	5
	2.3.1 Lap Shear Testing	5
	2.3.2 Floating Roller Peel Testing	9
	2.3.3 Stress-Durability Testing	9
	2.3.4 Thick Adherend DCB Crack Extension Testing	13
3	DISCUSSION OF RESULTS	18
	3.1 LAP SHEAR TEST RESULTS	18
	3.2 PEEL TEST RESULTS	29
	3.3 STRESS-DURABILITY TEST RESULTS	32
	3.4 CRACK EXTENSION TEST RESULTS	41
4	SUMMARY AND CONCLUSIONS	48
APPENDICES		
I	ADHEREND SURFACE PREPARATION PROCEDURES	51
II	PRIMER APPLICATION PROCEDURE	57
III	PANEL LAY-UP AND BONDING PROCEDURES	59
IV	SPECIMEN MACHINING PROCEDURES	62
V	ADHESIVE PROPERTY DATA FROM MANUFACTURERS' LITERATURE	64
VI	INDIVIDUAL SPECIMEN LAP SHEAR TEST DATA	66
VII	INDIVIDUAL SPECIMEN FLOATING ROLLER PEEL TEST DATA	89
VIII	INDIVIDUAL SPECIMEN STRESS-DURABILITY TEST DATA	94
IX	INDIVIDUAL SPECIMEN DCB CRACK GROWTH TEST DATA	103

LIST OF TABLES

TABLE		PAGE
1	Lap Shear Test Matrix	7
2	Lap Shear Test Results for 6061T6 Adherends with Machined Specimens and FPL Etch	20
3	Lap Shear Test Results on 6061T6 Adherends with Machined Specimens and OFPL Etch	21
4	Lap Shear Test Results on 5052H34 Adherends with Machined Specimens and FPL Etch	22
5	Lap Shear Test Results on 5052H34 Adherends with Machined Specimens and OFPL Etch	23
6	Lap Shear Test Results on 6061T6 Adherends with Finger Specimens and FPL Etch	24
7	Lap Shear Test Results on 6061T6 Adherends with Finger Specimens and OFPL Etch	25
8	Lap Shear Test Results on 5052H34 Adherends with Finger Specimens and FPL Etch	26
9	Lap Shear Test Results on 5052H34 Adherends with Finger Specimens and OFPL Etch	27
10	Floating Roller Peel Test Results	30
11	Stress-Durability Test Results	33
12	Stress-Durability Test Results for Extra Retested Specimens	38
13	DCB Crack Extension Results	42
14	Summary Ranking of Adhesives	49

LIST OF ILLUSTRATIONS

FIGURE		PAGE
1	Lap Shear Specimens (from ASTM D1002)	6
2	Lap Shear Testing Plan	8
3	Floating Roller ("Bell") Peel Specimen and Fixture (from ASTM D3167)	10
4	Peel Testing Plan	11
5	Lap Shear Specimen and Stress-Durability Fixture (from ASTM D2919)	12
6	Stress-Durability Testing Plan	14
7	Thick Adherend Double Cantilever Beam (DCB) Crack Extension Specimen (from AFML-TR-76-173)	15
8	Crack-Extension Testing Plan	17
9	Explanation of Failure Mode Notation	19
10	Stress-Durability Behavior on 6061T6 Bare Adherends	35
11	Stress-Durability Behavior on 5052H34 Bare Adherends	36
12	Stress-Durability Behavior of LR100-252 and EA9601NW Adhesives on 5052H34 Bare Adherends	39
13	Stress-Durability Behavior Summary	40
14	Effect of Etch Bath Sweetening Alloy on Interfacial Durability	43
15	Effect of Rinse Water Type on Interfacial Durability	44
16	Effect of Adhesive/Primer Type on Durability	45

SECTION 1
BACKGROUND AND INTRODUCTION

The Air Force, as well as the other services, has been utilizing lightweight, air transportable shelters for a wide variety of purposes for a number of years. Some of the many uses for these type shelters include the housing of personnel, hospital facilities, offices, and electronic instrument stations.

Modular building concepts incorporating such features as sandwich wall construction and adhesive bonding are routinely used for these structures to reduce production costs. Walls can consist of honeycomb or foam cores between aluminum skins. In addition to the skin-to-core bonding found in honeycomb-stiffened wall construction, adhesives are also used for metal-to-metal lap-type joints, and frequently serve both as a load bearing structural member as well as a joint sealant against environmental infiltration.

Shelters of this sort are used in many locations throughout the world, and consequently are subjected to a wide variety of environmental exposure conditions. These range from subzero arctic temperatures to hot, dry desert climates as well as hot, humid tropical conditions. Besides exposure to these various climatic extremes, the shelters are periodically subjected to abnormal stresses of transport from one location to another, exacerbating the demands made upon the structural members and bonded joints.

The shelter design requirements which most heavily influence the type of adhesives selected for use in structural bonding are

(a) Maximum and minimum exposure temperatures of -40°F (-40°C) to 200°F (93°C) with concomitant interior-to-exterior thermal gradients coupled with varying humidity conditions up to saturation,

(b) Water resistance,

(c) Overall stress loads ranging from 300 to 1200 psi (2.07 to 8.27 MPa), and

(d) Long-term durability of up to ten years of in-the-field use.

Experience has demonstrated that the hot-humid environment is the most demanding and that the adhesively bonded joints in these structures are the sites most susceptible to failure as a result of exposure to the stresses and climatic conditions described above.

The primary objective of this investigation was to identify commercially available adhesives which have the capability of retaining a substantial portion of their structural integrity after prolonged exposure to the combined effects of elevated temperature and high humidity. A secondary objective was to evaluate the effect of selected surface preparation variables upon the interfacial durability of bonded joints. A majority of the work undertaken was in direct response to the expressed concerns and desires of both the shelter manufacturers and adhesive vendors as well as that of the various services.

SECTION 2
APPROACH

Two adhesive characteristics were of basic interest in this evaluation effort: (1) the ability to resist the combination of elevated temperature and high humidity degradation, and (2) low temperature toughness. Although quantitative accept/reject criteria for these two characteristics have not yet been defined, the various adhesives evaluated can at least be compared to each other and given some sort of overall ranking.

Three types of tests were used for the adhesive evalations conducted during this program: (1) lap shear, (2) floating roller peel, and (3) stress-durability. Lap shear tests were conducted to measure the effect of both elevated temperature and humidity aging upon adhesive properties. The environmental exposure conditions were selected to correspond to those measured in the field [200°F (93°C) and 95-100 percent relative humidity]. Peel tests were conducted to characterize the toughness/brittleness of the adhesives at low temperatures [-65°F (-54°C)]. Stress-durability tests were conducted to measure the simultaneous effects of stress, elevated temperature, and high humidity upon adhesive bond life. The environmental exposure conditions for these were the same as for the lap shear tests.

A fourth type of mechanical test was used in the evaluation of the various surface preparation parameters. This was a thick adherend, double-cantilever-beam (DCB) crack extension test. The results of these tests measured the influence of surface preparation variables upon the environmental degradation of a bonded joint.

2.1 MATERIALS AND PROCESSES

There are four major categories of materials and processes which were of interest to this investigation: (1) adherend alloy; (2) adherend surface preparation procedure; (3) adhesive surface primer; and (4) adhesive.

The two principle adherend materials were bare 5052H34 and 6061T6 aluminum alloys. These represent the two principle aluminum alloys used in shelter construction today. A third aluminum alloy, bare 2024T3 was used to a limited extent during the program because of extensive prior experience with this alloy in adhesive bonding work. It is not generally used in shelter construction, because neither the 2000 or 7000 series aluminum alloys are easily welded or are as corrosion resistant as the 5000 or 6000 series alloys.

The primary surface preparation procedure used for the adhesive bonding work in this program was the optimized FPL (Forest Products Laboratory) etch treatment, although the non-optimized FPL etch treatment (ASTM D2651, method A) was used for some of the early work. The optimized FPL etch treatment (a sodium dichromate, sulfuric acid solution) is being adopted by the shelter manufacturing industry as the standard aluminum surface treatment for adhesive bonding. Details of these two surface treatment techniques and the significant difference between the two are presented in Appendix I.

Two corrosion inhibiting primers were used during the program: BR127 by American Cyanamid and XA3950 by 3M. The BR127 was used throughout the program while the XA3950 was used only in the lap shear portion. In addition, some specimens were prepared without primer during each part of the investigation. Appendix II describes the primer application procedures.

Seven vendor-supplied adhesives were evaluated. These, to the best of our knowledge, were all modified epoxies. Six of the adhesives were supplied in the form of a supported film while one (LR100-172) was a low viscosity, two-part system applied as a thin unsupported film by hand after mixing. The seven adhesives were:

(1)	LR100-172	(two part paste)	Hysol
(2)	R7114	($0.08 lb/ft^2$, $0.39 Kg/m^2$)	Reliable (Ciba-Geigy)
(3)	XA180	($0.06 lb/ft^2$, $0.29 Kg/m^2$)	3M
(4)	LR100-252	($0.09 lb/ft^2$, $0.44 Kg/m^2$)	Hysol (currently designated EA-9652)
(5)	MA-429	($0.06 lb/ft^2$, $0.29 Kg/m^2$)	McCann
(6)	R382-7	($0.08 lb/ft^2$, $0.39 Kg/m^2$)	Reliable (Ciba-Geigy)
(7)	EA9601NW	($0.085 lb/ft^2$, $0.42 Kg/m^2$)	Hysol

These seven adhesives were selected because they were either in current use in shelter construction or because they had been identified as likely candidates to replace those which were being used. Appendix V presents Manufacturers' data provided for each of these adhesives.

2.2 SPECIMEN FABRICATION PROCEDURES

The fabrication of the specimens used for data generation in this program consisted of a sequence of five distinct processes:

(1) Adherend surface preparation,

(2) Priming of freshly prepared adherend surface,

(3) Bonded joint panel layup,

(4) Curing of adhesive joint panel, and

(5) Machining of individual specimens from cured panel.

Each of these five processes is described in detail in Appendices I through IV, respectively. These include step-by-step descriptions of each procedure, as well as the quality control criteria used to accept/reject a part or finished panel at each step in the fabrication sequence.

2.3 TEST METHODS AND EXPERIMENTAL DESIGN

All testing conducted during this investigation was performed in accordance with standardized procedures. Thus, the lap shear, peel, and stress-durability tests followed ASTM test methods, while the crack-extension tests were in accordance with a method developed by the Boeing Corporation.

2.3.1 Lap Shear Testing

Lap shear tests were conducted in accordance with ASTM method D1002 on specimens from both the standard (fully machined after bonding) and the preslotted (finger) types of test panel (see Figure 1). Specimens were used only if the applied primer thickness and the cured glue line thickness fell within specified limits. The techniques used to measure these

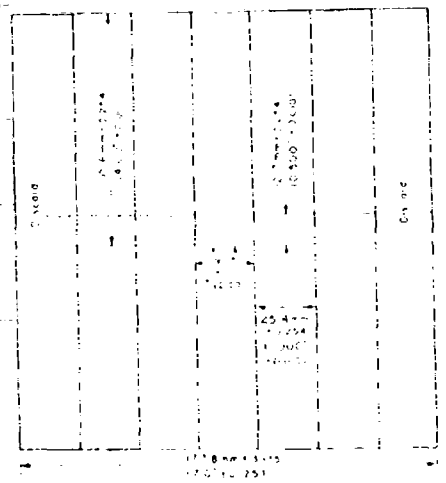

(a) MACHINED SPECIMENS

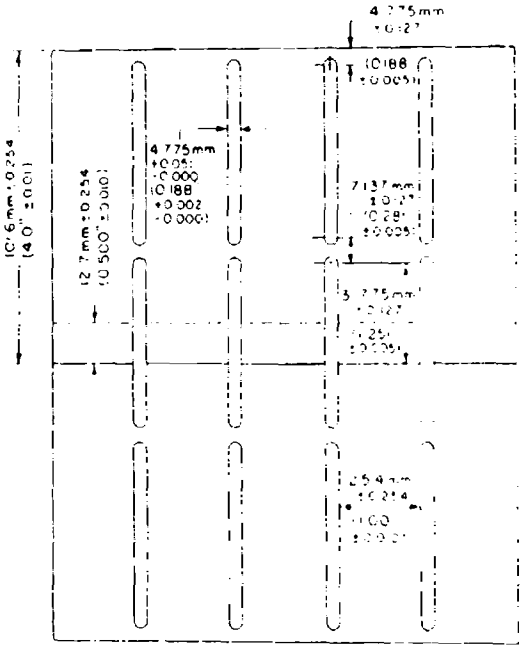

(b) PRESLOTTED (FINGER) SPECIMENS

Figure 1. Lap Shear Specimens (from ASTM D1002).

thicknesses are described in Appendices II and III, respectively. The specimens primed with BR127 were used only if the primer thickness fell within the 0.0002-0.0004 inch (0.005-0.010 mm) range. The specimens primed with XA-3950 were used only if the primer thickness fell within the 0.0001-0.0003 inch (0.003-0.008 mm) range. Both of these primer thickness ranges were recommended by the respective primer manufacturers. The bonded specimens were used only if the cured glue line thickness fell in the 0.004-0.007 inch (0.10-0.18 mm) range. This glue line thickness range was established by a consensus of shelter manufacturers at the start of the program.

Figure 2 lists the materials, processing, and test conditions included in the lap shear testing portion of this program.

With the exception of two adhesives, the test matrix consisted of a full factorial design incorporating five replicate specimens of each combination of adhesive, specimen type, adherend alloy, surface preparation, primer, and test condition. The two excepted adhesives (LR100-252 and MA-429) were not tested on finger specimens or with the standard FPL etch surface preparation. A full factorial design would have involved a total of 1,680 lap shear specimens. Table 1 indicates the actual test matrix, the omitted combinations accounting for a reduction of 240 in the specimen total.

TABLE 1

LAP SHEAR TEST MATRIX

Adhesive	Specimen Type		Surface Preparation	
	Machined	Finger	FPL	Opt. FPL
LR100-172	X	X	X	X
R7114	X	X	X	X
XA180	X	X	X	X
LR100-252	X	—NOT TESTED—		X
MA-429	X	—NOT TESTED—		X
R382-7	X	X	X	X
EA9601NW	X	X	X	X

NOTES: All indicated combinations were prepared using all three primer conditions (none, BR127, and XA-3950), and two adherend alloys (6061T6 and 5052H34), and tested at two test conditions [72°F (22°C) and 200°F (93°C) after hot-humid aging].

7 Adhesives

LR100-172---Hysol

R7114----Reliable

XA180----3M

LR100-252---Hysol

MA-429----McCann

R382-7----Reliable

EA9601NW---Hysol

2 Adherend Alloys

6061T6 Bare

5052H34 Bare

2 Specimen Types

Machined

Preslotted [Finger] (except for LR100-252 and MA-429)

2 Surface Preparations

FPL Etch (except for LR100-252 and MA-429)

Optimized FPL Etch

3 Primer Conditions

No primer

BR127-----American Cyanamid

XA 3950------3M

2 Test Conditions

72°F (22°C)

200°F (93°C) after two weeks at 200°F (93°C) and 95-100 percent R.H.

5 Replicates

TOTAL - 1,440 Specimens

Figure 2. Lap Shear Testing Plan.

2.3.2 Floating Roller Peel Testing

Floating Roller Peel (frequently referred to as "Bell" peel) tests were conducted in accordance with ASTM method D3167 (see Figure 3). Specimens were tested only if the applied primer thickness fell within the manufacturers recommended limits [0.0002-0.0004 inches (0.005-0.010 mm) for BR127]. Cured glue line thicknesses were not measured but the same shimming process was used in the manufacture of these panels as was used for the lap shear panels. This procedure results in about 95 percent of the cured bondlines falling within the desired thickness range of 0.004-0.007 inch (0.10-0.18 mm) (Appendix III). Tests were conducted at both 72°F (22°C) and -65°F (-54°C). Seven adhesives, three adherend alloys, one surface preparation, and one primer were involved in the peel testing for a total of 21 combinations. Additionally, one of the adhesives was used without a primer, adding three more combinations for a total of 24. Four specimens of each combination were tested at each of the two test temperatures. Figure 4 lists the materials, processing, and test conditions included in the peel testing portion of this program.

2.3.3 Stress-Durability Testing

Stress-durability tests were conducted in accordance with ASTM method D2919 (see Figure 5). The same accept/reject criteria regarding primer and glue line thickness were followed with these specimens as with the lap shear specimens mentioned in Paragraph 2.3.1.

Stress-durability tests consisted of mounting the specimen in the fixture illustrated in Figure 5, imposing a predetermined shear stress upon the specimen, and placing the specimen-fixture assembly in an elevated temperature, high humidity aging environment until the specimen failed as the exposure period reached a preselected limit (1000 hours in this program). In the event that the exposure period reached the

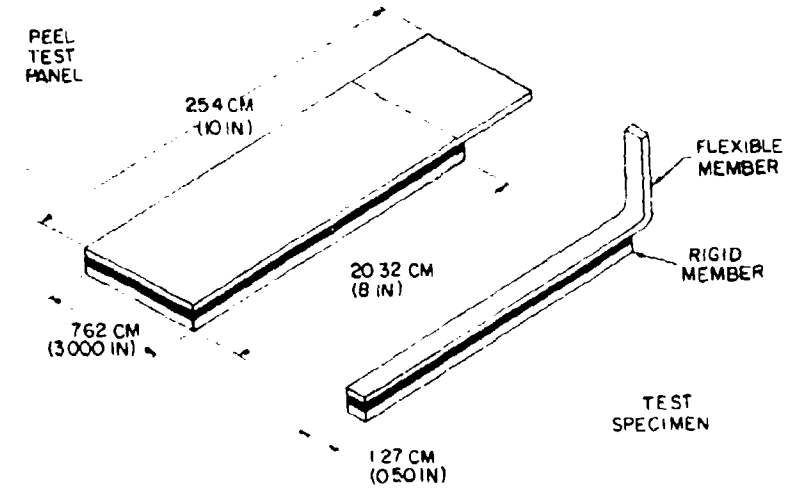

NOTE: A 1.5 TO 3.0 IN (38.1 TO 74.1 MM) SHIM CAN BE USED TO FACILITATE THE START OF PEEL.

(a) TEST PANEL AND TEST SPECIMENS

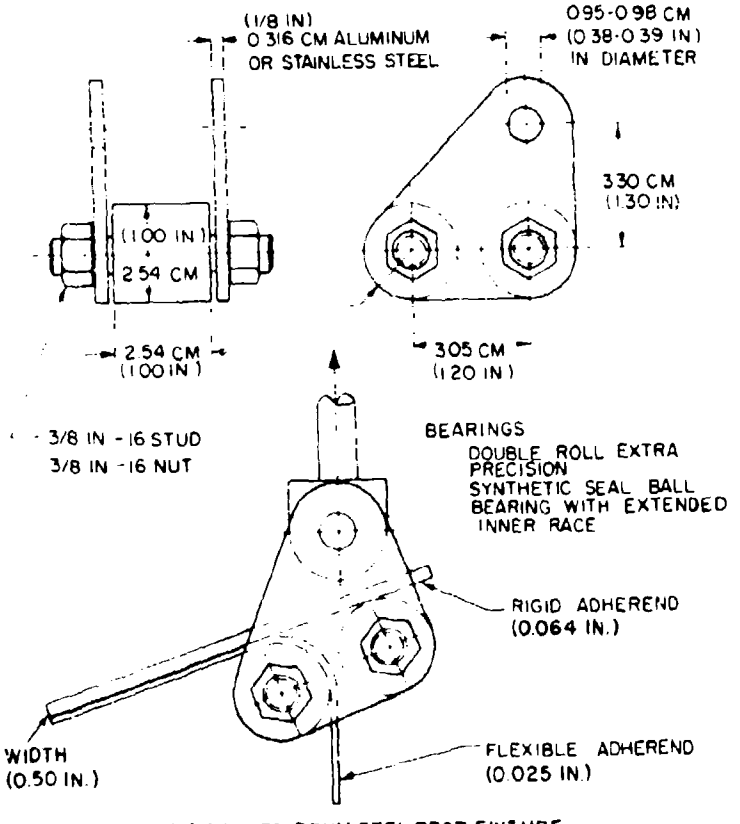

(b) ROLLER DRUM PEEL TEST FIXTURE

Figure 3. Floating Roller ("Bell") Peel Specimen and Fixture (from ASTM D3167).

7 Adhesives

LR100-172
R7114
XA-180
LR100-252
MA-429
R382-7
EA9601NW

3 Adherend Alloys

2024T3 Bare
6061T6 Bare
5052H34 Bare

1 Surface Preparation

Optimized FPL etch

1 Primer Condition

BR127 (except for LR100-172)

2 Test Conditions

72°F (22°C)
-65°F (-54°C)

4 Replicates

TOTAL - 192 Specimens

Figure 4. Peel Testing Plan.

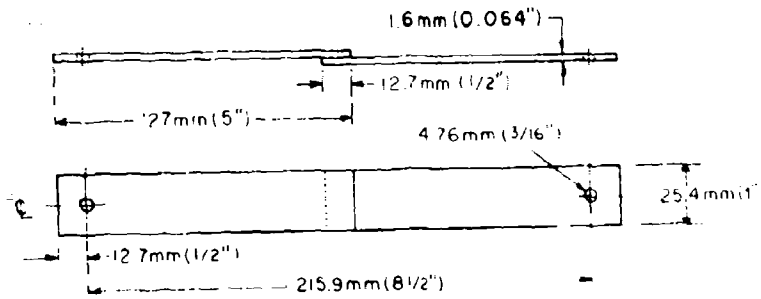

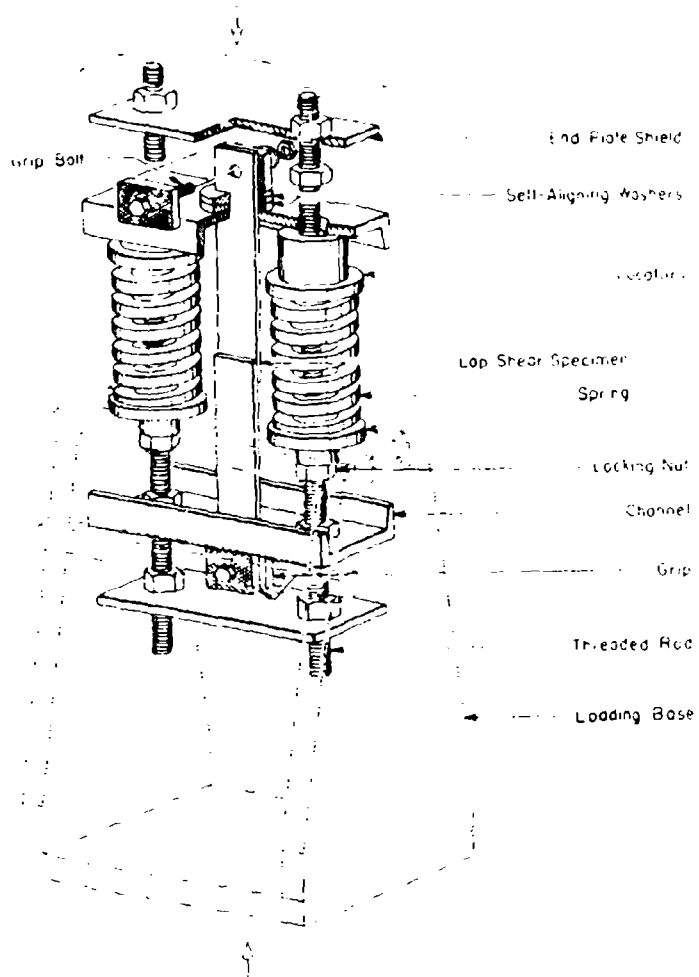

Figure 5. Lap Shear Specimen and Stress-Durability Fixture (from ASTM D2919).

1000 hr. limit without specimen failure, the fixture was removed from the environmental cabinet, and the specimen unloaded and removed from the fixture and tested for residual strength. This test was aimed at providing additional data on the effect of environment upon adhesives. While not necessarily providing real-life design type data, it did provide a comparative ranking of adhesive resistance to environmental degradation.

Standard lap shear tests were conducted at 72°F (22°C) and 140°F (60°C) on dry unaged specimens to provide baseline data. Stress-durability tests were conducted in a 140°F (60°C) and 95-100 percent R.H. environment at two stress levels: (1) 40 percent of 140°F (60°C) dry ultimate strength, and (2) 60 percent of the 140°F (60°C) dry ultimate strength. Times to failure were recorded and any specimens which had not failed within 1,000 hours were removed and tested for residual strength at 140°F (60°C). Seven adhesives, two adherend alloys, one surface preparation, and one primer were used for these tests; a total of 14 combinations. Additionally, as before, one of the adhesives was used without primer, bringing the total number of combinations of 16. Three specimens of each combination were tested at the two baseline conditions and five specimens of each combination were tested for durability at the two stress levels. Figure 6 lists the materials, processing, and test conditions included in the stress-durability testing portion of this program.

2.3.4 Thick Adherend DCB Crack Extension Testing

Crack extension tests were conducted with the thick adherend DCB specimen, and in accordance with the procedures described in AFML-TR-76-173. This specimen is illustrated in Figure 7. Specimens were used only if the applied primer thickness fell in the 0.0002-0.0004 inch (0.005-0.010 mm) range. As with the peel specimens the glue line thicknesses were controlled during fabrication but not measured. The objective of this portion of the program was to examine the effects of surface preparation variables upon the bond between the metal oxide and the surface primer. Only one adhesive (FM73) was used. This

7 Adhesives

LR100-172
R7114
XA180
LR100-252
MA-429
R382-7
EA9601NW

2 Adherend Alloys

6061T6 Bare
5052H34 Bare

1 Surface Preparation

Optimized FPL etch

1 Primer Condition

BR127 (except for LR100-172)

2 Test Conditions

40% stress level
60% stress level

5 Replicates

TOTAL - Stress-durability - 160 specimens
Baseline statics - 96 specimens
(3 replicates)

Figure 6. Stress-Durability Testing Plan.

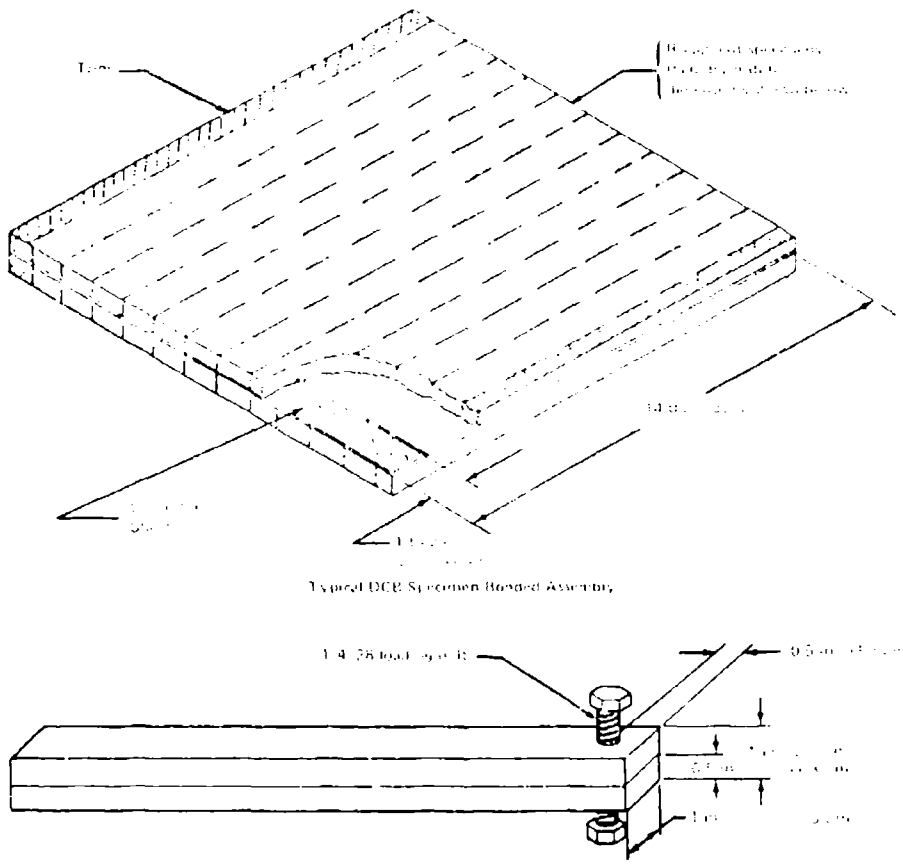

Figure 7. Thick Adherend Double Cantilever Beam (DCB) Crack Extension Specimen (from AFML-TR-76-173).

adhesive had been shown in the Primary Adhesive Bonded Structures Technology (PABST) program to be highly resistant to elevated temperature, high humidity degradation, and was selected to maximize the probability of failure along the oxide/primer interface. Only one primer (BR127) was used. One exception to this work plan was the use of a second adhesive (LR100-172) without primer in a few tests. The tests were conducted in a 140°F (60°C), 95-100 percent R.H. environment and crack lengths were measured as a function of time. The crack propagation locus was also recorded (i.e.: interfacial or within the adhesive layer). Figure 8 lists the materials, processing, and test conditions included in the crack-extension portion of this program.

9 Adhesive/Primer/Adherend Alloy/Surface Preparation Combinations

Adhesive:Primer	Adherend Alloy	OFPL Sweetening Alloy	Rinse Water
• FM73:BR127	2024T3	2024	Tap
• FM73:BR127	2024T3	2024	Deionized
• FM73:BR127	5052H34	2024	Tap
• FM73:BR127	5052H34	5052	Tap
• FM73:BR127	6061T6	2024	Tap
• FM73:BR127	6061T6	6061	Deionized
• FM73:BR127	6061T6	6061	Tap
• LR100-172:None	5052H34	2024	Tap
• LR100-172:None	6061T6	2024	Tap

1 Test Condition

140°F (60°C) and 95-100% R.H.

5 Replicates

TOTAL - 45 Specimens

Figure 8. Crack-Extension Testing Plan.

SECTION 3
DISCUSSION OF RESULTS

The interpretation and assessment of the results obtained in this investigation are based upon the measured strengths, times-to-failure, and strain energy release rates measured in the various tests as well as the observed failure modes in the bonded joint interfacial areas.

Traditionally, bonded joint failures have been reported as adhesive, cohesive, or some combination of the two. In this context, adhesive failure referred to a failure locus along the interface between the substrate and the adhesive layer, while cohesive failure referred to a failure locus completely within the adhesive layer. It was felt that with the inclusion of a primer layer in the bond, along with but distinct from the adhesive layer, the traditional means of reporting failure mode was inadequate. Accordingly, a different format for reporting failure mode was adopted during this investigation. This format is illustrated and explained in Figure 9. The interpretation of bonded joint failure modes is very subjective. It is difficult, with the naked eye, to ascertain the exact failure mode unless it is totally cohesive (within the adhesive layer). Interfacial failure modes may appear obvious but one cannot be sure, short of resorting to expensive surface instrumental analysis, that a very thin layer of primer or adhesive has not remained adhered to an otherwise clean appearing surface. Since the primer layer is so thin, the only evidence of its presence, to the eye, is generally color. In this investigation the only discriminations made regarding failure mode were those detectable by eye. Thus, it is to be recognized that regardless of the different presentation format, the failure modes reported in this document are still subjective.

3.1 LAP SHEAR TEST RESULTS

The data obtained from the testing of the lap shear specimens are summarized in Tables 2 through 9. The values presented in

For Bonds Made With No Primer

X-X

- cohesive failure within the adhesive layer (%)
- adhesive (interfacial) failure between the adhesive and the substrate oxide (%)

For Bonds Made With a Primer on the Substrate Surface

X-X-X-X

- cohesive failure within the adhesive layer (%)
- adhesive (interfacial) failure between the adhesive and the primer (%)
- cohesive failure within the primer layer (%)
- adhesive (interfacial) failure between the primer and the substrate oxide (%)

Example: 5-0-30-65 indicates that, according to the observer's estimate, the failed joint exhibits the following failure mode.

The primer pulled cleanly off the metallic oxide on 5% of the bond area.

At no point along the bondline did the failure locus run cohesively within the primer layer.

The adhesive debonded cleanly from the primer on 30% of the bond area.

The failure locus ran cohesively within the adhesive layer on 65% of the bond area.

Figure 7. Implication of Failure Mode Notation.

TABLE 2

LAP SHEAR TEST RESULTS FOR 6061T6
ADHERENDS WITH MACHINED SPECIMENS AND FPL ETCH

ADHESIVE	NO PRIMER				BR 127				XA-3950			
	72°F		200°F AFTER AGING		72°F		200°F AFTER AGING		72°F		200°F AFTER AGING	
	STRENGTH (PSI)	FAILURE MODE (%)	STRENGTH (PSI)	FAILURE MODE (%)	STRENGTH (PSI)	FAILURE MODE (%)	STRENGTH (PSI)	FAILURE MODE (%)	STRENGTH (PSI)	FAILURE MODE (%)	STRENGTH (PSI)	FAILURE MODE (%)
LS100-172	3150	100-0	2940	100-0	3080	85-0-15-0	2170	100-0-0-0	3010	35-0-65-0	2170	100-0-0-0
R7114	5550	5-95	270	100-0	5000	N.A.	510	0-0-0-100	5600	5-0-55-40	1100	10-0-0-90
XA-130	5040	10-90	1750	95-5	4720	35-0-0-65	2320	45-0-0-55	4880	0-0-10-90	2000	40-0-20-40
LS100-352	N.A.		N.A.		N.A.		N.A.		N.A.		N.A.	
XA-423	N.A.		N.A.		N.A.		N.A.		N.A.		N.A.	
R382-7	2390	10-90	1460	70-30	3340	15-0-65-20	2130	20-0-0-80	2950	70-0-0-25	1940	30-0-0-60
EA9001 NH	4200	75-25	410	90-10	4340	100-0-0-0	1110	100-0-0-0	3540	35-0-45-20	500	60-0-40-0

TABLE 3

LAP SHEAR TEST RESULTS ON 6061T6
ADHERENDS WITH MACHINED SPECIMENS AND OFPL ETCH

ADHESIVE	NO PRIMER				BR 127				XA-3950			
	72°F		200°F AFTER AGING		72°F		200°F AFTER AGING		72°F		200°F AFTER AGING	
	STRENGTH (PSI)	FAILURE MODE (%)	STRENGTH (PSI)	FAILURE MODE (%)	STRENGTH (PSI)	FAILURE MODE (%)	STRENGTH (PSI)	FAILURE MODE (%)	STRENGTH (PSI)	FAILURE MODE (%)	STRENGTH (PSI)	FAILURE MODE (%)
LR100-172	4860	100-0	2740	100-0	5280	0-0-100-0	3540	20-0-80-0	5190	0-0-100-0	2970	5-0-95-0
ST114	5680	40-60	720	40-60	5210	0-0-10-90	680	0-0-0-100	5410	0-0-30-70	730	0-0-0-100
XA-180	5220	5-95	2680	25-75	4710	0-0-10-90	2290	10-0-0-90	4960	0-0-0-100	2630	5-0-0-95
LR100-252	5000	30-70	2250	80-20	5120	0-0-0-100	2530	0-0-20-80	5340	0-0-5-95	2760	5-0-10-85
MA-429	5260	75-25	550	100-0	5270	0-0-80-20	960	0-0-20-80	5590	5-0-70-25	1350	0-0-20-80
P380-7	4030	90-10	2180	30-70	3860	0-40-0-60	3500	0-0-25-75	3990	20-10-40-30	1970	5-0-0-95
EP3601 MX	4940	25-75	1110	80-20	5410	0-0-60-40	1130	20-0-10-70	5090	0-0-5-95	1930	0-0-20-80

TABLE 4

LAP SHEAR TEST RESULTS ON 5052H34
ADHERENDS WITH MACHINED SPECIMENS AND FPL ETCH

[illegible]	AG PRIMER				BR 127				XA-3950			
	72°F		200°F AFTER AGING		72°F		200°F AFTER AGING		72°F		200°F AFTER AGING	
	STRENGTH (PSI)	FAILURE MODE (%)	STRENGTH (PSI)	FAILURE MODE (%)	STRENGTH (PSI)	FAILURE MODE (%)	STRENGTH (PSI)	FAILURE MODE (%)	STRENGTH (PSI)	FAILURE MODE (%)	STRENGTH (PSI)	FAILURE MODE (%)
[illegible]	[illegible]	100-0	2510	100-0	3180	100-0-0-0	2550	100-0-0-0	2900	15-0-85-0	1980	95-0-5-0
[illegible]	4030	50-50	420	100-0	4170	80-0-0-20	760	0-0-0-100	4550	5-0-65-30	870	20-0-0-80
[illegible]	4420	15-85	2000	90-10	3320	30-0-15-55	2290	45-0-0-55	3760	10-0-10-80	1290	55-0-45-0
[illegible]	N.A.		N.A.		3290	N.A.	1790	N.A.	N.A.		N.A.	
[illegible]	N.A.		N.A.		N.A.		N.A.		N.A.		N.A.	
[illegible]	2400	45-55	1340	90-10	2280	40-0-0-60	2440	80-0-0-20	2420	80-0-0-20	1610	65-0-0-35
[illegible]	5030	80-20	380	95-5	2950	100-0-0-0	700	100-0-0-0	3100	95-0-0-5	530	100-0-0-0

TABLE 5

LAP SHEAR TEST RESULTS ON 5052H34
ADHERENDS WITH MACHINED SPECIMENS AND OFPL ETCH

ADHESIVE	NO PRIMER				BR 127				XA-3950			
	72°F		200°F AFTER AGING		72°F		200°F AFTER AGING		72°F		200°F AFTER AGING	
	STRENGTH (PSI)	FAILURE MODE (%)	STRENGTH (PSI)	FAILURE MODE (%)	STRENGTH (PSI)	FAILURE MODE (%)	STRENGTH (PSI)	FAILURE MODE (%)	STRENGTH (PSI)	FAILURE MODE (%)	STRENGTH (PSI)	FAILURE MODE (%)
[illegible]	4100	20-80	2800	100-0	4130	10-0-90-0	2890	60-0-40-0	4400	10-0-90-0	2730	100-0-0-0
[illegible]	[illegible]	5-95	580	40-60	4570	0-0-30-70	670	0-0-0-100	4810	0-0-30-70	590	0-0-5-95
[illegible]	4070	10-90	2260	1090	3840	0-0-10-90	1140	0-0-0-100	3980	0-0-0-100	1370	0-0-0-100
[illegible]	4310	40-60	3620	50-50	4520	0-0-90-10	2510	5-0-10-85	4630	0-0-50-95	3060	0-0-10-90
[illegible]	4710	70-30	1350	90-10	4490	0-0-90-10	2240	0-0-30-70	4520	0-0-80-20	2030	0-0-15-85
[illegible]	3030	35-65	1850	30-70	2750	5-0-35-65	1240	0-0-0-100	3160	80-0-0-20	1830	0-0-0-100
[illegible]	4120	50-50	1010	70-30	4430	0-0-40-60	1360	0-0-20-80	4070	60-0-0-40	760	70-0-0-30

TABLE 6

LAP SHEAR TEST RESULTS ON 6061T6
ADHERENDS WITH FINGER SPECIMENS AND FPL ETCH

ADHESIVE	NO PRIMER				SR 127				XA-3950			
	72°F		200°F AFTER AGING		72°F		200°F AFTER AGING		72°F		200°F AFTER AGING	
	STRENGTH (PSI)	FAILURE MODE (%)	STRENGTH (PSI)	FAILURE MODE (%)	STRENGTH (PSI)	FAILURE MODE (%)	STRENGTH (PSI)	FAILURE MODE (%)	STRENGTH (PSI)	FAILURE MODE (%)	STRENGTH (PSI)	FAILURE MODE (%)
EA9309-172	3780	100-0	3150	100-0	3890	100-0-0-0	3390	80-0-20-0	4210	50-0-50-0	3060	70-0-30-0
5011A	5350	10-90	350	100-0	5370	25-0-20-55	490	0-0-0-100	5770	0-0-25-75	700	10-0-0-90
XA-280	4920	10-90	2180	40-60	4530	30-0-0-70	2190	25-0-0-75	4820	0-0-10-90	2420	15-0-20-65
EA9309-252	N.A.		N.A.		N.A.		N.A.		N.A.		N.A.	
XA-428	N.A.		N.A.		N.A.		N.A.		N.A.		N.A.	
R362-7	3580	5-95	560	90-10	4180	0-0-20-80	1550	20-0-0-80	4440	5-5-0-90	1490	50-0-0-50
EA9601 NW	4770	10-90	390	100-0	5000	10-0-30-60	1650	40-0-0-60	4930	0-0-20-80	1350	60-0-10-30

TABLE 7

LAP SHEAR TEST RESULTS ON 6061T6
ADHERENDS WITH FINGER SPECIMENS AND OFPL ETCH

ADHESIVE	NO PRIMER				BR 127				XA-3950			
	72°F		200°F AFTER AGING		72°F		200°F AFTER AGING		72°F		200°F AFTER AGING	
	STRENGTH (PSI)	FAILURE MODE (%)	STRENGTH (PSI)	FAILURE MODE (%)	STRENGTH (PSI)	FAILURE MODE (%)	STRENGTH (PSI)	FAILURE MODE (%)	STRENGTH (PSI)	FAILURE MODE (%)	STRENGTH (PSI)	FAILURE MODE (%)
LR100-172	4700	100-0	2880	100-0	4230	0-0-100-0	3120	0-100-0-0	4550	0-0-100-0	3080	5-0-95-0
57114	2400	0-100	90	0-100	3300	0-0-0-100	130	0-0-0-100	3070	0-0-0-100	100	0-0-0-100
XA-180	3100	10-90	1510	30-70	2440	0-0-0-100	1130	0-0-0-100	2860	0-0-0-100	1340	0-0-0-100
LR100-252	N.A.		N.A.		N.A.		N.A.		N.A.		N.A.	
MA-429	N.A.		N.A.		N.A.		N.A.		N.A.		N.A.	
9352-7	3710	30-70	1500	55-45	3880	0-35-0-65	1450	15-0-0-85	3890	0-45-55-0	1320	10-0-0-90
EA9801 NW	5050	15-85	490	100-0	5300	0-0-30-70	1270	0-0-10-90	5030	0-0-25-75	1050	0-0-20-80

TABLE 8

LAP SHEAR TEST RESULTS ON 5052H34
ADHERENDS WITH FINGER SPECIMENS AND FPL ETCH

ADHESIVE	NO PRIMER				BR 127				XA-3950			
	72°F		200°F AFTER AGING		72°F		200°F AFTER AGING		72°F		200°F AFTER AGING	
	STRENGTH (PSI)	FAILURE MODE (%)	STRENGTH (PSI)	FAILURE MODE (%)	STRENGTH (PSI)	FAILURE MODE (%)	STRENGTH (PSI)	FAILURE MODE (%)	STRENGTH (PSI)	FAILURE MODE (%)	STRENGTH (PSI)	FAILURE MODE (%)
LR100-172	2520	100-0	2590	100-0	2620	100-0-0-0	2750	100-0-0-0	2400	100-0-0-0	2410	100-0-0-0
R7214	4150	15-85	200	100-0	3700	65-0-30-5	620	5-0-0-95	3590	30-0-0-70	310	10-0-0-90
XA-180	3490	15-85	1460	55-45	2880	25-0-20-55	1650	10-0-15-75	3070	0-0-15-85	1390	25-0-30-45
LR100-252	N.A.		N.A.		N.A.		N.A.		N.A.		N.A.	
MA-429	N.A.		N.A.		N.A.		N.A.		N.A.		N.A.	
R582-7	2570	35-65	300	90-10	2680	50-0-0-50	950	85-0-0-15	2690	40-0-0-60	1270	10-0-0-90
EA9801 WW	3500	20-80	230	100-0	3090	90-0-0-10	830	55-0-0-45	3140	25-0-0-75	590	85-0-0-15

TABLE 9

LAP SHEAR TEST RESULTS ON 5052H34
ADHERENDS WITH FINGER SPECIMENS AND OFPL ETCH

ADHESIVE	NO PRIMER				BR 127				XA-3950			
	72°F		200°F AFTER AGING		72°F		200°F AFTER AGING		72°F		200°F AFTER AGING	
	STRENGTH (PSI)	FAILURE MODE (%)	STRENGTH (PSI)	FAILURE MODE (%)	STRENGTH (PSI)	FAILURE MODE (%)	STRENGTH (PSI)	FAILURE MODE (%)	STRENGTH (PSI)	FAILURE MODE (%)	STRENGTH (PSI)	FAILURE MODE (%)
[illegible]	[illegible]	100-0	2780	100-0	3700	100-0-0-0	3040	40-0-60-0	3320	25-0-75-0	2780	25-0-75-0
[illegible]	[illegible]	0-100	0	10-90	2800	0-0-0-100	180	0-0-0-100	3050	0-0-0-100	90	0-0-0-100
[illegible]	[illegible]	10-90	1080	10-90	2240	0-0-0-100	1120	0-0-0-100	2490	0-0-0-100	1320	0-0-0-100
[illegible]	N.A.		N.A.		N.A.		N.A.		N.A.		N.A.	
[illegible]	N.A.		N.A.		N.A.		N.A.		N.A.		N.A.	
[illegible]	[illegible]	0-100	580	45-55	3270	0-0-30-70	960	0-0-0-100	3310	0-0-40-60	1610	0-0-25-75
[illegible]	N.A.		210	75-25	N.A.		430	0-0-0-100	N.A.		520	0-0-20-80

these tables represent averages of five replicate specimens. A comprehensive listing of all of the individual specimen-by-specimen lap shear test data is presented in Appendix VI.

In general, three adhesives (LR100-172, XA-180, and LR100-252) withstood moisture attack very well, exhibiting residual strengths after exposure of greater than 1000 psi (6.89 MPa) in every case.

Two other adhesives (R382-7 and MA429) withstood moisture attack well but did exhibit a few residual strength values less than 1000 psi (6.89 MPa). The residual strength after aging of the R382-7 system fell below 1000 psi (6.89 MPa) in five out of 24 cases. Two of these were on unprimed FPL etched surfaces and exhibited interfacial failure. A third was on an unprimed OFPL-etched surface and exhibited considerable interfacial failure. The other two were on BR127-primed surfaces and very narrowly missed the 1000 psi (6.89 MPa) level. The residual strength after aging of the MA429 system fell below 1000 psi (6.89 MPa) in two out of six cases. One of these was on an unprimed surface and exhibited interfacial failure. The other very narrowly missed the 1000 psi (6.89 MPa) level.

Another adhesive (EA9601NW) exhibited marginal moisture resistance. In 14 of the 24 cases, the residual strength after aging of this adhesive fell below 1000 psi (6.89 MPa). Twelve of these 14 cases, however, exhibited interfacial failure between either the adhesive and the primer layer or between the adhesive and the unprimed adherend. The other two were cohesive failures within the adhesive layer. This indicates that with the EA9601NW adhesive system, the interfacial bond degrades more rapidly than the adhesive itself during hot humid environmental aging.

The last adhesive (R7114) was very susceptible to moisture degradation. In 23 out of 24 cases, the residual strength of this system after aging fell below 1000 psi (6.89 MPa) and the one exception reached only 1100 psi (7.58 MPa). Most of these failures are within the adhesive layer (cohesive failure).

The optimized FPL etch produces consistently higher strength levels than the standard FPL etch on the machined lap shear specimens. On the preslotted type specimens, however, some adhesive/primer combinations exhibited higher strengths on the FPL etched surface than on the OFPL etched surface.

In general, specimens made with the 6061T6 alloy exhibit higher joint strengths than those made with the 5052H34 alloy. Since the 6061T6 has a higher yield stress than the 5052H34, the bending at the end of the lap area is postponed until a higher load is reached during a lap shear test. This, in turn, postpones the introduction of peel stresses into the joint and leads to the higher joint strengths.

Although moisture degradation appears to be slightly more severe on the preslotted finger specimens than on the machined specimens, the differences between the two is not substantial.

In general, the specimens with primed surfaces resist degradation better than those with unprimed surfaces. In some cases, however, the reverse is true but the overall difference is not substantial. There seems to be little difference in the residual property results shown by either the BR127 or XA3950 primers.

3.2 PEEL TEST RESULTS

The data obtained from the testing of the peel specimens are presented in Table 10. Probably the most obvious feature of this data is the fact that the bond formed between the BR127 primer and the LR100-172 adhesive has very little resistance to peeling stresses! All of the specimens primed with BR127 and bonded with LR100-172 failed along the primer/adhesive interface at low loads.

The peel properties of the unprimed specimens bonded with LR100-172 were significantly higher than those of the primed specimens. Failures were predominantly along the metal/adhesive

TABLE 10

FLOATING ROLLER PEEL TEST RESULTS

Substrate Alloy	Primer	Adhesive	Peel Strength (lb/inch width) 72°F Strength	72°F Fail. Mode	-65°F Strength	-65°F Fail. Mode
2024T3	None	LR100-172	25.5	95-5	20.6	100-0
2024T3	BR127	LR100-172	4.0	0-0-100-0	4.7	0-0-100-0
2024T3	BR127	R7114	41.5	0-0-0-100	24.3	10-0-30-60
2024T3	BR127	XA180	38.7	60-0-40-0	21.7	85-0-15-0
2024T3	BR127	100-252	44.9	30-0-0-70	11.8	85-0-15-0
2024T3	BR127	MA-429	15.3	0-0-85-15	3.[illegible]	[illegible]-0-70-5
2024T3	BR127	R382-7	15.4	0-0-60-40	3.5	0-0-80-20
2024T3	BR127	EA9601 NW	40.8	0-0-0-100	33.6	30-0-10-60
6061T6	None	LR100-172	11.6	100-0	14.4	90-10
6061T6	BR127	LR100-172	4.4	25-0-75-0	3.0	0-0-100-0
6061T6	BR127	R7114	37.2	25-0-0-75	17.6	0-0-70-30
6061T6	BR127	XA180	42.4	60-0-40-0	26.3	90-0-10-0
6061T6	BR127	100-252	29.8	100-0-0-0	7.9	100-0-0-0
6061T6	BR127	MA-429	24.0	60-0-40-0	6.7	90-0-10-0
6061T6	BR127	R382-7	22.5	10-0-70-20	6.7	0-0-90-10
6061T6	BR127	EA9601 NW	52.0	0-0-0-100	30.6	60-0-0-40
5052H34	None	LR100-172	18.6	100-0	18.4	30-7[illegible]
5052H34	BR127	LR100-172	3.0	0-0-100-0	3.4	0-0-100-0
5052H34	BR127	R7114	19.7	25-5-10-60	10.1	5-0-40-5[illegible]
5052H34	BR127	XA180	21.[illegible]	30-15-15-40	21.1	30-30-15-2[illegible]
5052H34	BR127	100-252	41.4	0-0-65-35	21.7	[illegible]
5052H34	BR127	MA-429	20.[illegible]	0-0-80-20	14.[illegible]	[illegible]
5052H34	BR127	R382-7	24.[illegible]	15-5-50-35	19.6	[illegible]
5052H34	BR127	EA9601 NW	2[illegible]	15-0-0-85	17.6	[illegible]

NOTES: 1. All specimens [illegible] with an [illegible] surface.
2. All values [illegible] of four specimens.

interface on the unprimed LR100-172 specimens but at relatively high loads compared to the primed specimens, which failed along the adhesive/primer interface.

The lap shear test results, discussed previously, and the lap shear stress-durability test results, discussed later, failed to provide any indication of the BR127/LR100-172 adhesive/primer incompatibility manifested by the peel test results in Table 10.

In general, the EA9601NW and the XA180 adhesives gave the best peel strength levels at -65°F (-54°C). These were followed by the unprimed LR100-172 system, then R7114 and LR100-252. Next in rank are the R382-7 and MA-429 systems and the lowest was the primed LR100-172 system.

Generally, the failure locus becomes more interfacial in nature as the test temperature changes from 72°F (22°C) to -65°F (-54°C). Thus, the primer layer, and its associated interfaces, appears to have been the portion of the bond most susceptible to low temperature peeling stresses. After the tests were completed, concern was expressed that the primer thickness should have been reduced. Since we were, however, interested in joints representative of those present in shelter structures, and not those ideal for best peel properties, our specimens were prepared with the same primer layer thickness as used for the lap shear joints. In addition to the strength levels exhibited by each adhesive system, a consideration of the failure mode and relative amount of strength decrease from room temperature to -65°F (-54°C) is also useful. Hence, a brief, general, adhesive-by-adhesive description of the results follows.

The EA9601NW loses about one-third of its room temperature peel strength at -65°F (-54°C). At room temperature, it fails predominantly within the adhesive layer (cohesive), while at the reduced temperature, the failure mode becomes more primer and more interfacially oriented with a mixture of all four of the modes explained in Figure 9 evident.

The XA180 adhesive system loses about one-third of its room temperature peel strength at -65°F (-54°C) also. This

system exhibits relatively little failure within the adhesive layer at either test temperature. Rather, the failure locus is principally along the adherend/primer interface and to a lesser extent along the primer/adhesive interface, with a small amount appearing to be within the primer layer itself.

The R7114 adhesive loses about one-half of its room temperature strength at -65°F (-54°C). While its failure mode is primarily cohesive (within the adhesive layer) at both test temperatures, a substantial amount of primer/adhesive interfacial failure appears at the lower temperature.

The unprimed LR100-172 adhesive loses very little of its room temperature peel strength at -65°F (-54°C). At both test temperatures, however, the failure mode is predominantly interfacial along the adherend/adhesive interface.

The LR100-252 adhesive loses between one-half and three-quarters of its room temperature peel strength at -65°F (-54°C). Its failure mode at room temperature exhibits substantial amounts of adherend/primer and primer/adhesive interfacial failure as well as cohesive failure within the adhesive layer itself. At -65°F (-54°C) the failure shifts entirely to the adherend/primer interface and to the primer layer.

Both the R382-7 and MA-429 adhesives exhibited failure loci in peel which were predominantly along the primer/adhesive interface at both test temperatures. Both adhesives also exhibited peel strength reductions of over 50 percent when tested at -65°F (-54°C).

Comparing these peel results with the lap shear results discussed in Paragraph 3.1, one notes that only the XA180 adhesive ranked high in both peel and lap shear.

3.3 STRESS-DURABILITY TEST RESULTS

The data obtained from the lap-shear stress-durability tests are summarized in Table 11 and illustrated in Figures 10

TABLE 11

STRESS-DURABILITY TEST RESULTS (1)

Substrate Alloy	Primer	Adhesive	40% Stress Level (6)					60% Stress Level (6)		
			Exposure Stress (psi)	Hrs. to Failure(7)	Fail. Mode	Residual Strength (% of baseline)	Fail. Mode	Exposure Stress (psi)	Hrs. to Failure(7)	Fail. Mode
606126	None	LR100-172	1700	24	100-0	---	---	2550	8	100-0
	BR127	LR100-172	2190	961+(3)	75-0-25-0	86	75-0-25-0	3220	104	45-0-55-0
		R7114	1910	340	5-0-0-95	---	---	2910	10	10-0-0-90
		XA-180	1660	1000+(2)	---	89	10-0-0-90	2480	80	20-0-0-80
		LR100-252	2030	1000+(2)	---	78	20-0-30-50	3040	170	40-0-10-50
		MA-429	2170	1000+(2)	---	80	10-0-55-35	3260	105	25-0-60-15
		R382-7	1650	301	15-0-0-85	---	---	2780	4	10-0-0-90
		EA9601NW	2060	850+(4)	50-0-10-40	87	15-0-35-50	3090	305	35-0-5-60
5052H34	None	LR100-172	1500	752	100-0	---	---	2250	91	100-0
	BR127	LR100-172	1700	567+(5)	70-0-30-0	94	0-0-100-0	2550	34	30-0-70-0
		R7114	1450	34	0-0-0-100	---	---	2180	25	0-0-0-100
		XA-180	1180	727	5-0-0-95	---	---	1780	310	15-0-0-85
		LR100-252	1610	556	20-0-0-80	---	---	2420	880	20-0-15-65
		MA-429	1920	943+(4)	10-0-15-75	76	5-0-80-15	2890	736	15-0-40-45
		R382-7	1590	410	0-0-0-100	---	---	2400	106	5-0-0-95
		EA9601NW	1790	250	10-0-0-90	---	---	2680	733	15-0-0-85

NOTES:
1. All specimens prepared with an OFPL etched surface.
2. All five specimens survived for 1000 hours without failure.
3. Four specimens survived for 1000 hours without failure.
4. Three specimens survived for 1000 hours without failure.
5. One specimen survived for 1000 hours without failure.
6. Based on baseline ultimate strength of dry unaged specimens tested at 140°F (60°C).
7. All time-to-failure values represent averages of five specimens. Specimens were exposed at 140°F (60°C) and 95-100% R.H. while under stress.

and 11. The values presented in this table represent averages of at least five replicate specimens.

In addition to the hours-to-failure exhibited by each adhesive, the stress level to which the specimens were subjected during exposure are noted. Since each adhesive system exhibits its own characteristic strength and since the exposure stress levels were set at a percentage of the adhesives lap shear strength at 140°F (60°C), one must consider the stress during exposure as well as the time-to-failure and failure mode in assessing relative stress-durability of the various adhesives.

The lap shear control strength values, upon which the exposure stress levels are based, are presented in Appendix VIII along with the individual stress-durability results. The 140°F (60°C) lap shear control strength values were used to compute the 40 percent and 60 percent stress levels for use during the durability exposures. The room temperature values were measured primarily to provide a means of checking the quality of the panels from which these specimens were obtained against the room temperature lap shear results for the same combinations of adherend, surface preparation, primer, and adhesive tested during the lap shear portion of the program and discussed in Paragraph 3.1. In 14 of the 16 cases, the room temperature strength values obtained from the stress-durability panels are within 10 percent of the value obtained previously in the lap shear testing. The two exceptions both occur on 5052H34 adherends with one (XA180) being 17 percent lower than the original lap shear result and the other (R382-7) being 42 percent higher. There are more frequent differences in the apparent failure mode with 11 of the 16 cases exhibiting substantial differences in failure mode from the original results. For the most part, these differences in failure mode consist of more failure along the metal/primer interface in the control specimens for the durability tests than in the original lap shear results.

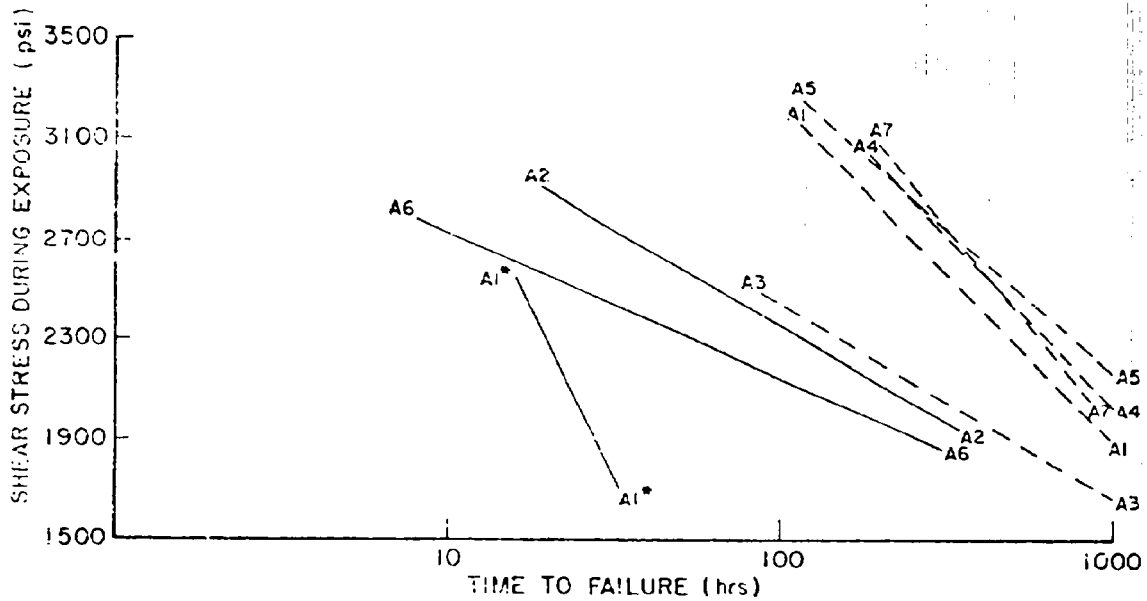

A1*	LR100-172/NO PRIMER	A4	LR100-252/BR127
A1	LR100-172/BR127	A5	MA-429/BR127
A2	R7114/BR127	A6	R382-7/BR127
A3	XA180/BR127	A7	EA9601NW/BR127

Figure 10. Stress-Durability Behavior on 6061T6 Bare Adherends.

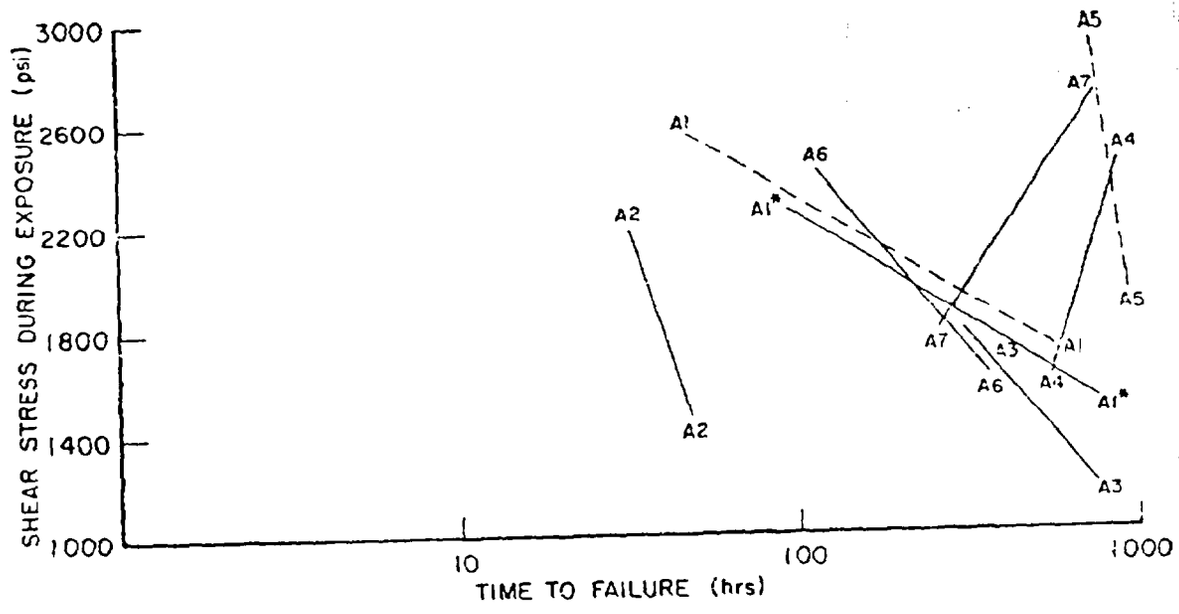

A1*	LR100-172/NO PRIMER	A4	LR100-252/BR127
A1	LR100-172/BR127	A5	MA-429/BR127
A2	R7114/BR127	A6	R382-7/BR127
A3	XA180/BR127	A7	EA9601NW/BR127

Figure 11. Stress-Durability Behavior on 5052H34 Bare Adherends.

The single most obvious feature of the data plotted in Figures 10 and 11 is the reversed slope of the curves for LR100-252 and EA9601NW on 5052H34 adherends. No explanation for this can be offered unless the times-to-failure and stress levels were inadvertently interchanged for these two combinations. These tests were rerun however, using extra specimens left over from the original LR100-252 and EA9601NW panels. The data from these tests are presented in Table 12 and Figure 12 and are consistent with the trend one would expect.

It will be noted in Figure 10 that the 6061T6 stress durability curves seem to fall into three general groupings. One, representing those adhesives with the best stress-durability behavior includes LR100-172 (with primer), LR100-252, MA429, and EA9601NW. The second, representing those adhesives with intermediate stress durability behavior, includes XA180, R7114, and R382-7. The third includes only the LR100-172 adhesive used on an unprimed surface and represents a very short time-to-failure.

Assuming that the second set of tests with the LR100-252 and EA9601NW adhesives on 5052H34 adherends (Table 12) is more indicative of their stress-durability behavior than the first set (Table 11), the stress durability curves for 5052H34 adherends (Figure 11) also fall into three general groupings. The first, representing those adhesives with the best stress durability behavior includes MA429, LR100-252, and EA9601NW. The second grouping, representing those adhesives with intermediate stress-durability includes LR100-172 (both with and without primer), XA180, and R382-7. The third group for the 5052 adherends is composed only of R7114 and represents a very short time-to-failure.

Figure 13 superimposes the 6061 and 5052 data groupings on a single graph for greater ease in visualizing the relative adhesive/adherend stress-durability behavior. It can be seen here that the general location of the high, intermediate, and low data groupings coincide fairly well for both adherend alloys.

In summary, three adhesives (LR100-252, MA429, and EA9601NW) exhibited consistently higher stress durability than the others

TABLE 12

STRESS-DURABILITY TEST RESULTS FOR EXTRA RETESTED SPECIMENS (1)

Substrate Alloy	Primer	Adhesive	40% Stress Level (3)				60% Stress Level (3)			
			Exposure Stress (psi)	(MPa)	Hrs. to Failure(4)	Fail. Mode	Exposure Stress (psi)	(MPa)	Hrs. to Failure(4)	Fail. Mode
5052H34	BR127	LR100-252	1610	11.1	736*(2)	20-0-10-70	2420	16.7	396	40-0-30-30
5052H34	BR127	LR100-252	1610	11.1	736*(2)	10-0-30-60	2420	16.7	184	40-0-10-50
		Avg.	1610	11.1	736*	15-0-20-65	2420	16.7	290	40-0-20-40
5052H34	BR127	EA9601NW	1790	12.3	736*(2)	30-0-10-60	2680	18.5	553	30-0-10-60
5052H34	BR127	EA9601NW	1790	12.3	736*(2)	20-0-10-70	2680	18.5	542	30-0-10-60
		Avg.	1790	12.3	736*	25-0-10-65	2680	18.5	547.5	30-0-10-60

NOTES:
1. All specimens prepared with an OFPL etched surface.
2. Failure due to malfunction in humidity chamber which resulted in overheating to 200°F (93°C).
3. Based on baseline ultimate strength of dry unaged specimens tested at 140°F (60°C).
4. Specimens were exposed to 140°F (60°C) and 95-100% R.H. while under stress.

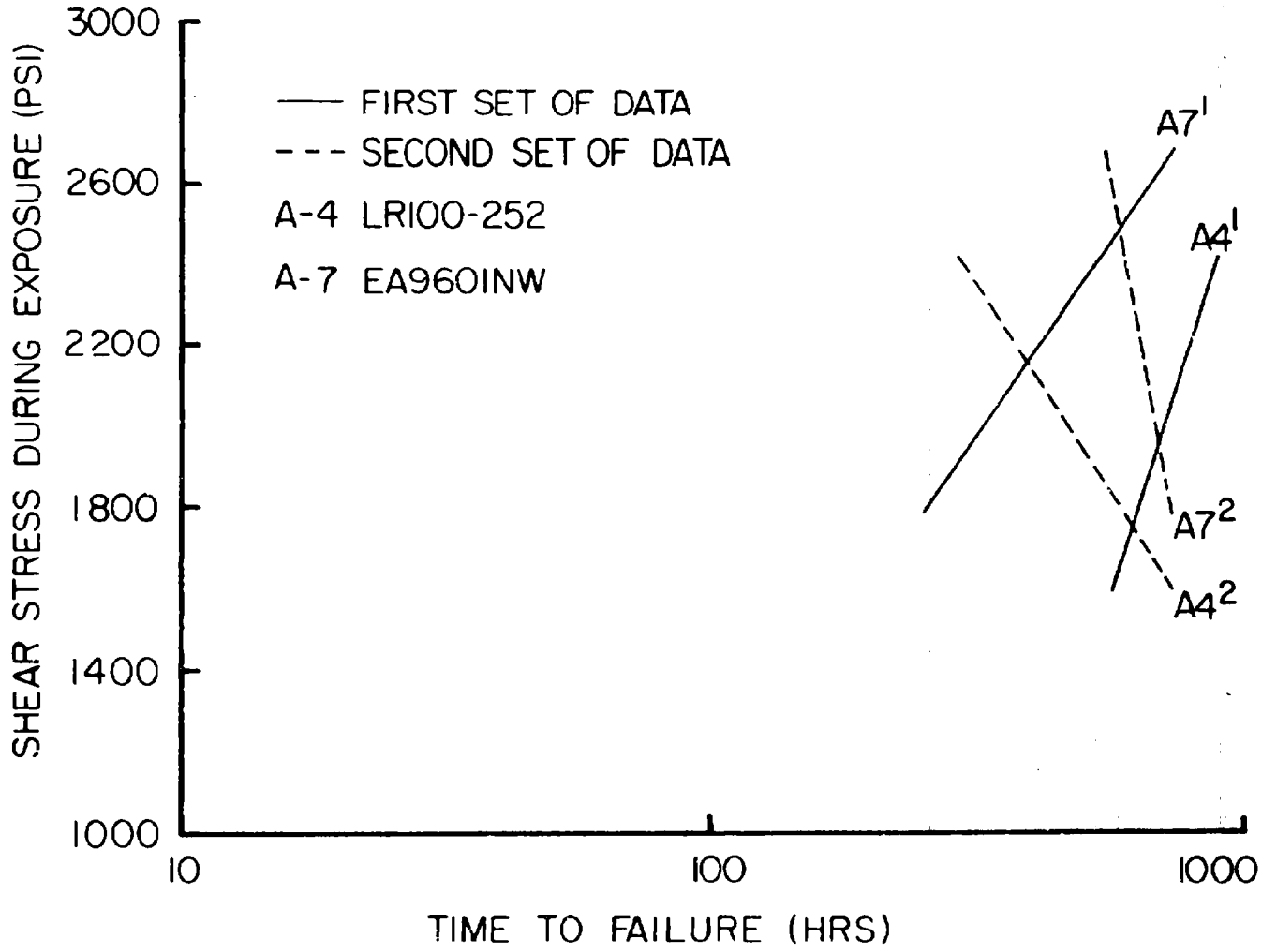

Figure 12. Stress-Durability Behavior of LR100-252 and EA9601NW Adhesives on 5052H34 Bare Adherends.

GROUP	ADHEREND ALLOY	ADHESIVES
1	6061T6	A1, A4, A5, A7
2	6061T6	A2, A3, A6
3	5052H34	A1*, A1, A3, A6

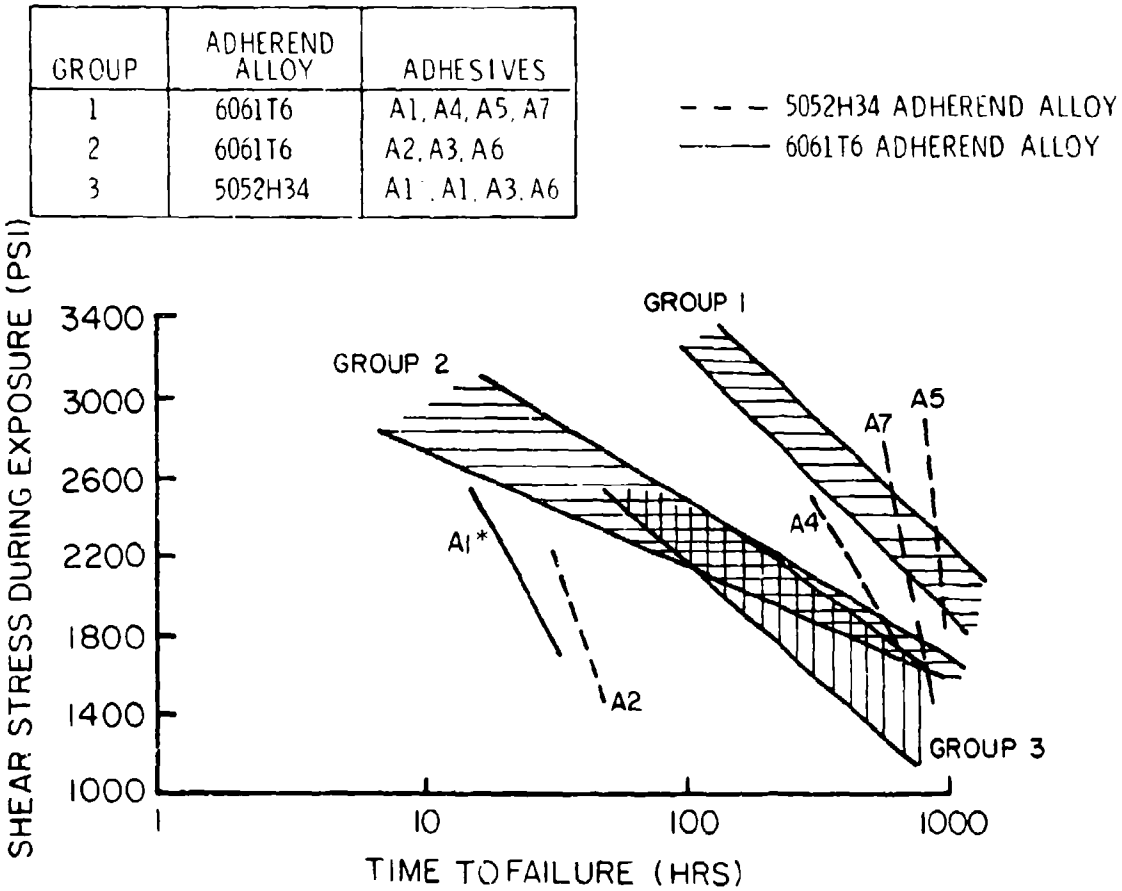

A1*	LR100-172:NO PRIMER	A4	LR100-252:BR127
A1	LR100-172:BR127	A5	MA-429:BR127
A2	R7114:BR127	A6	R382-7:BR127
A3	XA180:BR127	A7	EA9601NW:BR127

Figure 13. Stress-Durability Behavior Summary.

tested in this program. One adhesive (LR100-172 with primer) performed well on the 6061T6 alloy but only moderately well on the 5052H34 alloy. Two adhesives (XA180 and R382-7) fell into the intermediate time-to-failure regions on both adherend alloys. The last two adhesives (R7114 and LR100-172 without primer) fell into the low to intermediate groupings on each adherend alloy.

There does not seem to be a consistent relationship between failure mode and stress durability. The three better adhesives in this type test exhibit markedly different combinations of failure. The MA429 exhibited considerable adhesive-to-primer failure, the EA9601NW considerable failure within the adhesive layer, and the LR100-252 considerable primer-to-metal failure as well as failure within the adhesive layer. The two lower durability adhesives displayed dramatically different failure modes with one being exclusively interfacial between the adhesive and the unprimed metal while the other was predominantely within the adhesive layer.

3.4 CRACK EXTENSION TEST RESULTS

The data obtained from the testing of the double cantilever beam (DCB) crack extension specimens are summarized in Table 13 and presented graphically in Figures 14 to 16.

One of the differences between the standard and optimized FPL etching solutions is that the optimized solution is "sweetened" by dissolving 2024 aluminum in the acid solution before it is used for panel etching (see Appendix I). This "sweetening" has been found to provide significantly improved bonding. One question which arose in the course of this investigation was whether the "sweetening" of the initial etch solution should be accomplished by dissolving 2024 aluminum alloy (as the normal optimized FPL process calls for) in the etch solution regardless of the type of alloy to be treated, or whether the solution should be "sweetened" with the same alloy as that which is to be etched. Three different alloy "sweeteners" were consequently utilized in this portion of the program.

TABLE 13

DCB CRACK EXTENSION RESULTS

Adherend Alloy	OFPL Sweetening Alloy	Water Type	Adhesive: Primer	G_I $(\frac{in\text{-}lb}{in^2})$ T=0 hr.	T=1 hr.	T=24 hr.	T=168 hr.	T=336 hr.	T=504 hr.	Failure Mode
2024T3	2024	Tap	FM73:BR127	19.3	15.2	10.8	8.2	7.3	6.7	70-0-0-30
2024T3	2024	Deionized	FM73:BR127	18.0	15.8	12.6	10.6	9.8	9.5	15-0-0-85
5052H34	2024	Tap	FM73:BR127	30.0	23.9	20.0	19.1	18.3	17.2	15-0-0-85
5052H34	5052	Tap	FM73:BR127	3.3	0.13	0.11	0.11	0.11	0.11	100-0-0-0
6061T6	2024	Tap	FM73:BR127	16.2	12.7	11.2	9.4	8.7	7.9	25-0-0-75
6061T6	6061	Deionized	FM73:BR127	13.8	0.24	0.15	0.15	0.14	0.14	100-0-0-0
6061T6	6061	Tap	FM73:BR127	11.6	3.7	0.46	0.45	0.45	0.45	90-0-0-10
5052H34	2024	Tap	LR100-172: None	5.7	5.4	5.4	5.4	5.4	5.2	0-100
6061T6	2024	Tap	LR100-172: None	1.3	1.3	1.2	1.2	1.2	1.1	20-80

$$G_I = \frac{y^2 E h^3 [3(a + 0.6h)^2 + h^2]}{16[(a + 0.6h)^3 + ah^2]^2}$$

y = displacement at load point (inches) [beam separation]

E = adherend modulus (psi x 10^6)

h = adherend thickness (inches)

a = crack length from load point (inches)

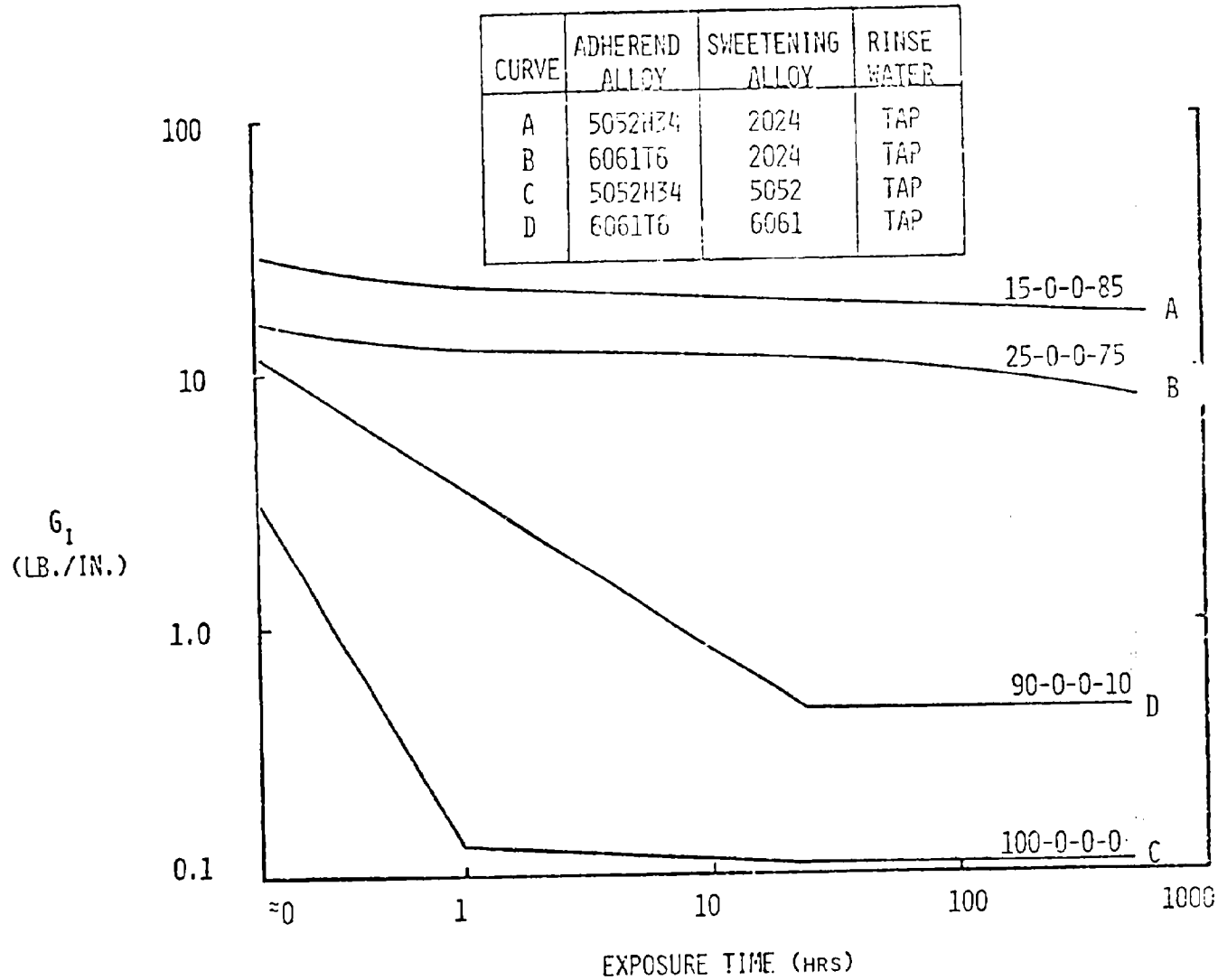

Figure 14. Effect of Etch Bath Sweetening Alloy on Interfacial Durability.

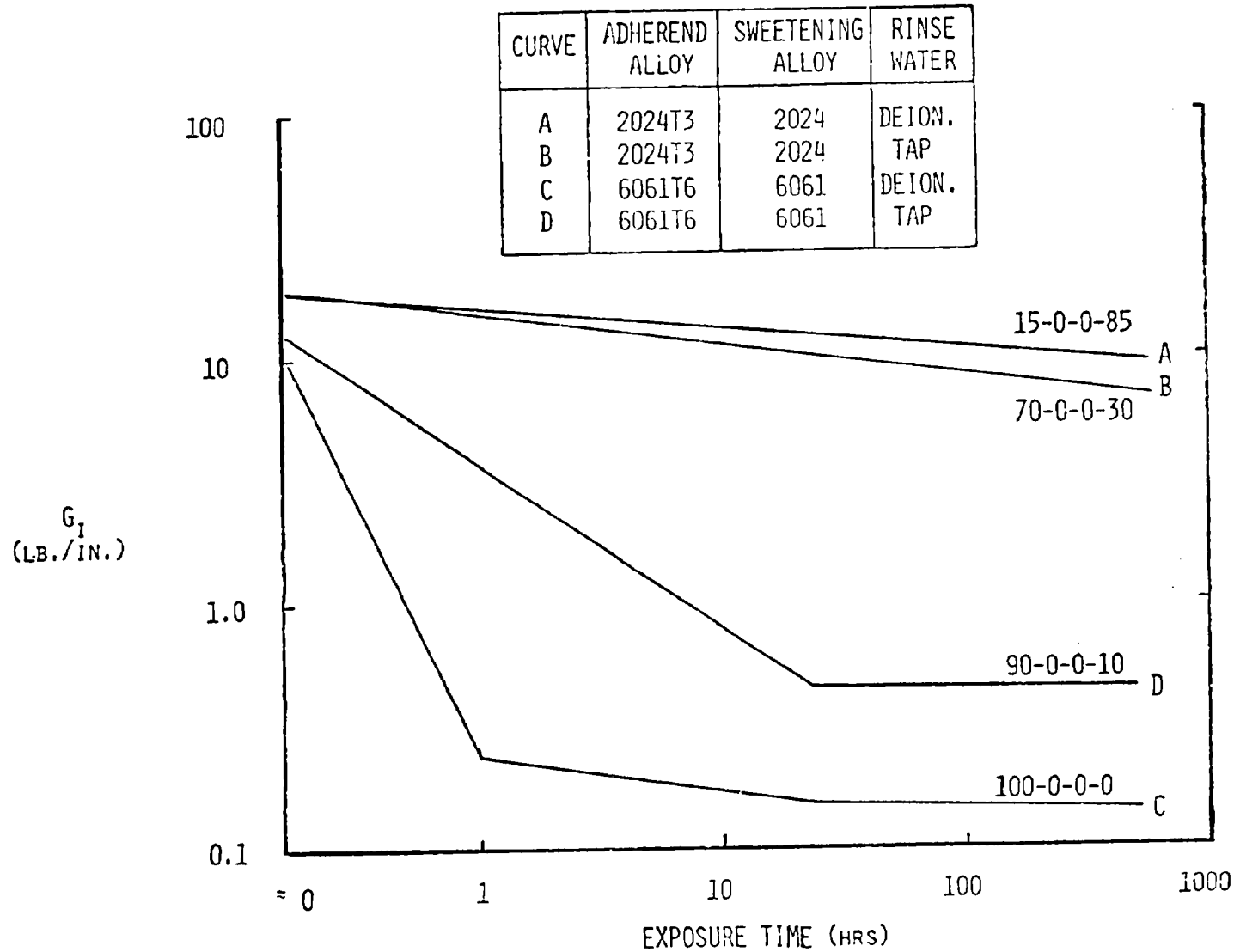

Figure 15. Effect of Rinse Water Type on Interfacial Durability.

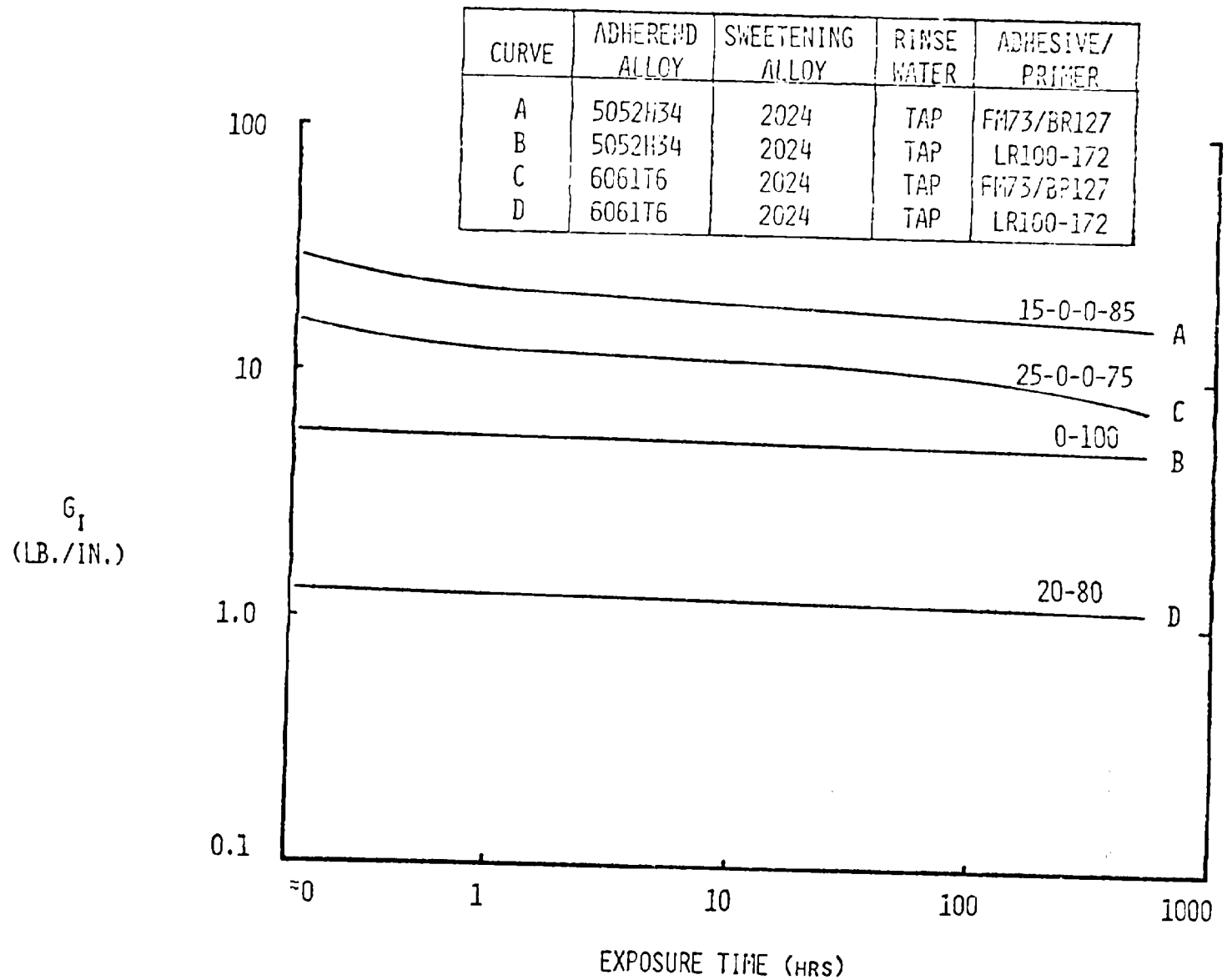

Figure 16. Effect of Adhesive/Primer Type on Durability.

After etching, the adherends are rinsed before drying. This rinse can be accomplished with either tap water or deionized water. Some question existed as to whether deionized water rinsing leads to significant bond improvement considering its considerably higher cost. This was also examined.

The principle conclusion of the results presented in Table 13 and Figures 14-16 is that regardless of the aluminum alloy being etched, the etch bath should be sweetened with 2024 alloy for highest bond durability. The reason for this is generally felt to be the presence of copper in the 2024 alloy. In fact, some investigators believe that sweetening the bath with copper alone is sufficient. Examination of the failure modes for these tests corroborate the differences in interfacial bond quality obtained when the etch bath is sweetened with 2024 rather than a non-copper containing alloy. The baths sweetened with the copper containing 2024 alloy produced bonds which failed predominantly in the adhesive layer, while those sweetened with the non-copper alloys produced bonds which failed predominantly at the adherend-primer interface.

The use of a deionized rinse rather than a tap water rinse appears to be marginally worthwhile. On a 2024 alloy adherend etched with a 2024 sweetened bath, a deionized rinse produced a more durable bond, the difference becoming relatively greater as the aging time increased. Further, the tap water rinse resulted in substantially more failure along the metal-primer interface than the deionized water rinse. On a 6061 alloy adherend etched with a 6061 sweetened bath, however, the deionized rinse produced a less durable bond. Since these latter two bonds were both poor due to the use of a non-copper containing sweetener, the relative effects of the two rinse methods may have been obscured by the poor bonds.

The last observation available from these results is that the LR100-172 adhesive without primer is very inferior to the FM73/BR127 combination insofar as its initial (up to 504 hours and more) ability to withstand crack extension is concerned.

The LR100-172 adhesive bond, however, degraded less during exposure than the FM73/BR127 system. It is conceivable that had the exposures been extended to a long enough time (60-100 days if the data in Figure 16 is extrapolated) the LR100-172 may have proven the more durable. The fact that these LR100-172 bonded joints failed predominantly within the adhesive layer rather than at the adherend-adhesive interface indicates that this adhesive forms a bond directly to the bare etched metal which does not require a primer layer to impart environmental durability when loaded in a cleavage mode at 140°F (60°C).

SECTION 4
SUMMARY AND CONCLUSIONS

It was stated in the introduction that the primary objective was to identify adhesives which have the capability of retaining a substantial portion of their structural integrity after prolonged exposure to the combined effects of elevated temperature and high humidity. This judgement must be based upon the overall performance of the adhesive in a variety of loading modes and environmental conditions as well as upon the anticipated requirements of the particular application. Hence, it is felt that comparing the relative performance of the adhesives tested in this program in the various different loading modes and environmental conditions is an appropriate way to conclude. This comparison is presented in Table 14 as a subjective rating of each adhesive in lap shear, peel, and stress durability.

It can be observed in Table 14 that no single adhesive ranks high in all categories. Hence, the use of only one or two types of tests for evaluating adhesives for shelter applications is inadequate since some adhesives can display good property levels in one type test and poor property levels in another. Indeed, the adhesives can be formulated to exhibit superior characteristics under one or two stress conditions and environments.

A secondary objective was to evaluate the effect of selected surface preparation variables upon the interfacial durability of bonded joints. Two variables were evaluated: the type of aluminum alloy dissolved in the FPL etch solution to "sweeten" it, and the type of water used to rinse the panels after etching. The most significant result of these tests was that regardless of the aluminum alloy being etched, the FPL etch bath should be sweetened with 2024 alloy, presumably because of its copper content. Unless this dissolved copper is present in the etch solution, bonding surfaces resistant

TABLE 14

SUMMARY RANKING OF ADHESIVES

Adhesive	Relative Ranking in Comparison to Other Adhesives Tested		
	Aged Lap Shear	Low Temp. Peel	Stress Durability
LR100-252	high	intermediate	high
XA180	high	high	intermediate
MA 429	high-to-intermediate	low-to-intermediate	high
EA9601NW	low-to-intermediate	high	high
LR100-172[1]	high	high-to-intermediate	low-to-intermediate
R382-7	high-to-intermediate	low-to-intermediate	intermediate
LR100-172	high	low	high-to-intermediate
R7114	low	intermediate	low-to-intermediate

[1]On unprimed adherend surfaces.

to humidity degradation will not be obtained. The use of deionized water for rinsing during adherend surface preparation provides some improvement in bond durability but the added cost must be weighed against the amount of improvement attained in large industrial processes. This judgement must also take into account the quality of tap water available in order to determine the degree of durability achievable without deionized water rinsing.

One other testing variable evaluated in this investigation was the type of specimen used in the lap shear tests. The use of the preslotted (finger) specimens for lap shear testing offer no advantages over machined specimens in the development of shear data since the adhesives evaluated were ranked in the same order of decreasing strength by both types of specimens. Since the finger specimens are more expensive, there is no advantage in their use.

APPENDIX I

ADHEREND SURFACE PREPARATION PROCEDURES

Two different surface preparation procedures were used in the preparation of the test specimens, a standard and an optimized FPL etch. The standard basic (or non-optimized) FPL etch treatment is described in ASTM D2651, Method A. The optimized FPL etch treatment is described in ASTM D2651, Method G. The step-by-step procedures utilized in this investigation are described as follows.

Adherend Etch Procedure

1. Solvent wipe with MEK or acetone.
2. Vapor degrease for 10 minutes in trichloroethylene.
3. Alkaline wash for 10 minutes at 155 $\pm$ 5°F (68 $\pm$ 3°C) (Note 1).
4. Water rinse for 10 minutes in a continuous flow bath (Note 3).
5. Etch for 10 minutes in the FPL (or optimized FPL) etch solution at 155 $\pm$ 5°F (68 $\pm$ 3°C) (Note 2).
6. Water rinse immediately after removal from etch solution for 10 minutes in an agitated continuous flow bath (Notes 3 and 4).
7. Force dry with a heat gun or in an oven for 10 minutes at 150°F (60°C).

Notes:

1. Alkaline solution consists of:
   a. 1 gallon tap water
   b. 170 grams Turco 4215
   c. 7 ml. Turco 4215 additive
2. FPL etch solution consisted of:
   a. 11.[illegible] liters tap water
   b. 4[illegible] grams $Na_2Cr_2 \cdot 2H_2O$
   c. 2.[illegible] liters H_2SO_4 (reagent)
   d. 20 gms of dissolved 2024 aluminum alloy (optimized FPL etch solution only).
3. A tap water rinse was used in the preparation of the Bat Sheet (Paragraphs [illegible] and [illegible]) and [illegible] the Crack Extension (Paragraphs [illegible] and [illegible]) specimens, for both the standard and optimized FPL etches. For all other specimens (Peel, Stress-Durability, and

part of the Crack Extension, Paragraphs 2.3.2-4, and 3.2-4) a deionized water rinse was used.

4. At the conclusion of the rinse step, cleaned parts were observed for water break. A panel passed if a continuous film of water was maintained on the surface for not less than 30 seconds. Parts failing this water break inspection were reprocessed through the acid etch procedure described above. If the part failed a second time, it was discarded.

It will be noted that the only difference between the standard and optimized FPL etch procedure is that the etch solution used in the optimized procedure has 2024 aluminum alloy dissolved in it while the standard solution does not. The significance of this difference seems to be in the copper content of the starting etch solution imparted by the copper containing 2024 alloy. If a non-optimized FPL etch solution is used to treat a copper containing alloy such as 2024, the copper content of the solution will increase and the solution will gradually become optimized. A copper concentration equivalent to that obtained by dissolving 0.20 ounces or more of 2024 aluminum alloy per gallon of solution (1.5 gm/liter) is required for an FPL etch solution to be considered optimized. During this investigation, the non-optimized FPL etch solutions were discarded before the copper content reached this level.

Titration to Determine Sodium Dichromate Concentration of FPL Etch Solution

Materials:
- Sulfuric Acid, concentrated - 96.4 percent
- Potassium Iodide, crystals
- Sodium Thiosulfate, 0.1N (purchased)
- Starch Indicator Solution
- Deionized Water

All materials to be reagent grade.

Hardware:
- Mettler Balance
- Pipette: 1 ml, 1/100 ml graduations
- Pipette: 2 ml, 1/10 ml graduations
- Pipette: 5 ml, 1/10 ml graduations
- Pipette: 25 ml, 1/10 ml graduations
- Pipette: 50 ml Transfer
- Burets: 2 ea. 100 ml Automatic
- Burets: 1 ea. 50 ml Automatic
- Burets: 1 ea. 50 ml

- Magnetic Stirrer
- Magnetic Stir Bar
- 250 ml Ehrlenmeyer Flask
- Pipetting Bulb
- 250 or 500 ml Holding Bottles
- 125 ml Ehrlenmeyer Flask
- 1000 ml Ehrlenmeyer Flask
- 100 ml Volumetric Flask

Procedure:

1. Clean all glassware with Alconox and water, rinse several times with distilled or deionized water and allow to dry thoroughly.

2. Insure that glassware is at room temperature.

3. Make sulfuric acid, 10 percent, by weighing 100 grams of sulfuric acid (concentrated) into a flask (125 ml). Fill a 1000 ml flask with 500 grams of deionized water (weigh it). Pour the acid into the deionized water while stirring. Weigh additional deionized water into the flask until you have 1000 grams of solution.

4. Make 20 percent potassium iodide by weighing 20 grams into a 100 ml volumetric flask. Add a little bit of deionized water and swirl until the crystals dissolve. Add deionized water until the 100 ml volume mark is reached by the bottom of the meniscus. Store in a dark place -- it is light sensitive.

5. Pipette 2 ml of acid etch to be tested into a 250 ml Ehrlenmeyer flask. Drop a magnetic stir bar into the bottom and place on a stirrer.

6. Add 50 ml of deionized water by transfer pipette.

7. Add 12.5 ml of 10 percent H_2SO_4 (by pipette or buret).

8. Add 3 ml of potassium iodide [20 percent solution] (by pipette or buret).

9. Titrate with 0.1N sodium thiosulfate until a straw color appears -- do this very slowly so as not to overshoot the end-point (from buret).

10. Add 2 ml starch indicator by pipette.

11. While stirring rapidly, add 0.1N sodium thiosulfate <u>dropwise very slowly</u> until color changes to a light blue.

12. Record the number of ml of sodium thiosulfate used.

Calculations:

Determine the sodium concentration by the following formula:

$$\frac{\text{ml of sodium thiosulfate (0.1N)} \times 4.967}{2} = \text{Sodium dichromate concentration in grams per liter of solution}$$

Safety:

Wear safety glasses, acid proof gloves, and a lab coat. Use Pipetting bulb for transferring liquids. Decontaminate spills with Alconox and water. For skin contact, wash thoroughly with soap and water. For eye contact, rinse 15 minutes with water, get medical aid.

Titration to Determine Sulfuric Acid Concentration of FPL Etch Solution

Materials:
- 0.1N NaOH Solution (purchased)
- Deionized Water

Hardware:
- Pipette: 1 ml, 1/100 ml graduations
- Pipetting Bulb
- 250 ml Beaker (2)
- Magnetic Stirrer
- 50 ml Transfer Pipette
- Magnetic Stir Bar
- pH Meter
- 100 ml Automatic Buret
- pH7 Buffer Solution

Procedure:

1. Clean all glassware with Alconox and water, dry thoroughly and bring to room temperature.

2. Place clean stir bar in a 250 ml beaker.

3. Transfer 0.5 ml of acid etch to the beaker using a 1.0 ml pipette.

4. Add 100 ml of deionized water using a transfer pipette.

5. Rinse pH meter electrodes with deionized water, wipe dry.

6. Immerse electrodes in buffer solution (pH7) and adjust meter to read pH7.

7. Rinse electrodes and wipe dry.

8. Immerse electrodes in the acid solution which you have placed on a stirrer.

9. Add NaOH (0.1N) dropwise until pH 3.5 is reached.

10. Record the number of ml on NaOH (0.1N) used.

Calculations:

Determine the sulfuric acid concentration as follows:

$$\frac{\text{ml of NaOH (0.1N)} \times 49.04}{5} = \text{Sulfuric acid concentration in grams per liter of solution}$$

Safety:

Wear safety glasses, acid proof gloves, and a lab coat. Pipette liquids using a bulb. Decontaminate spills with Alconox and water. For skin contact, wash thoroughly with soap and water. For eye contact, rinse 15 minutes with water, get medical aid.

Adjustment of FPL Etch

Materials:
- Sulfuric Acid (Reagent)
- Sodium Dichromate (Reagent)
- Deionized Water (needed only if measured concentrations are too high and solutions must be diluted)

Hardware:
- Graduated Cylinders - size as needed

Procedure:

1. After titration, the concentrations determine how much sodium dichromate and sulfuric acid to add using the following specification:

   Sodium Dichromate 28.5 grams/liter (27.0 - 30.0)

   Sulfuric Acid 285.0 grams/liter (280 - 290)

2. Adjust the acid first - remember adding acid changes the volume.

3. Add dichromate according to the new adjusted volume.

Calculations:

Example: Sodium dichromate was 21.5 grams/liter.
Sulfuric acid was 215 grams/liter.

To add acid 285-215 = 70 grams per liter

$$\frac{70}{1.65} = 42.4 \text{ ml of acid}$$

(10 percent sulfuric acid has specific gravity of 1.65 grams/ml)

(pour acid slowly - it will get hot as you add it to the solution)

The new volume is now 1.04 liters.

To add sodium dichromate

28.5-21.5 = 7 grams/liter
7 x 1.04 = 7.28 grams

After adjustment, recheck concentrations by titration.

If the concentrations measured by titration are too high, the reverse procedure (add water to dilute) must be followed.

Safety:

Acid gloves and aprons, safety glasses. Spills decontaminate with Alconox and water. Rinse skin or eyes with water - get medical aid.

APPENDIX II

PRIMER APPLICATION PROCEDURE

The primer was applied to the adherends using the following equipment and procedures.

2.1 Equipment

The Brinks Wren B (air brush) was used in priming the smaller bonding area panels (lap-shear and stress-durability adherends) because it would conserve primer (less over-spray) and give a similiar spray pattern as obtained with the Brinks Model 15 spray gun used on the larger panels.

The Brinks Model 15 (spray gun) was used in priming the larger bonding area panels (floating roller peel and DCB crack growth adherends) because it covers a larger surface area with each pass of the gun, saving time and giving a more uniform thickness control of the primer.

A Dermitron D-9 (Eddy Current) by Unit Process Assemblies Inc. was used to measure primer thickness.

2.2 Application Procedure

The primer was applied in several coats rather than in a one or two pass build up of primer thickness. The Brinks Wren B (air brush) was set up for best spray pattern using 20-25 psi line pressure and the primer was applied in 10 to 15 passes at a distance of 8 inches (20 cm). The Brinks Model 15 (spray gun) was adjusted for the best pattern at 30-35 psi line pressure and the primer was applied in a criss-cross pattern of 4-5 passes in each direction at a distance of 12 inches (30 cm).

Thickness measurements were taken with the Dermitron D-9 instrument several times during the coarse of the primer application until the desired primer thickness had been attained. The

color of the primed surface was noted and the remainder of the panels were sprayed to visual color equivalence. All primed surfaces were inspected with the Dermitron D-9 Instrument to insure that the primer layer was within the desired limits. Any primed surfaces with visibly obvious defects/blemishes were also rejected.

2.3 Cure Cycle (both primers)

Air dry for 30 minutes at 72°F (22°C)

100 percent check of primer thickness (manufacturers specification)

Force dry for 60 minutes at 250°F (122°C)

Spot check for primer thickness

2.4 Storage

The primed adherends were covered with Kimwipes and stored at 72°F (22°C), 50 percent relative humidity until bonding.

2.5 Bonding

The panels were bonded within 24 hours of priming using the manufacturers recommended cure cycle.

APPENDIX III

PANEL LAY-UP AND BONDING PROCEDURES

The various types of panels prepared during this program are illustrated in Figures 1, 3, and 4. The film adhesives were stored in a closed plastic wrapper at 0°F (-18°C) prior to use. The adhesive was warmed to room temperature before removal from the wrapper to prevent moisture condensation on the adhesive. Adhesive pieces were cut to the required size with a razor knife. These sizes were 5/8" x 9-1/4" for the lap-shear and stress-durability panels, 3" x 8" for the peel panels, and 6" x 12" for the crack growth panels.

The etched and primed adherend panels, along with the adhesive, were assembled in the stacking sequence illustrated in Figure III-1. The assembled lay-up stack was placed in a preheated press and the curing schedule appropriate for each adhesive was carried out (see Table III-1).

The only exception to the above procedure was for the LR100-172, a 2-part paste adhesive stored at room temperature. With this system, appropriate amounts of each component were hand blended on a clean flat surface with a steel spatula until color homogeneity was achieved. It was then trowelled onto the bond area by hand to an approximate thickness of 0.010-0.015 inches (0.254-0.381 mm) and the lay-up stack assembled as shown in Figure III-1.

After curing of the bonded panels the panels were inspected for proper alignment (no slippage during cure), and the glue line thickness was measured on the lap shear panels to insure that they were within the acceptable limits of 0.004-0.007 inches (0.10-0.18 mm).

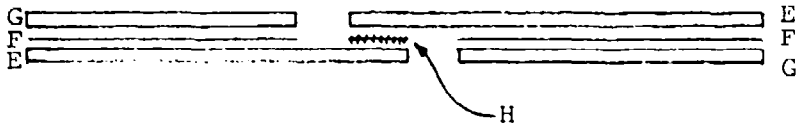

(a) Lap-Shear and Stress-Durability Specimen Layup Model

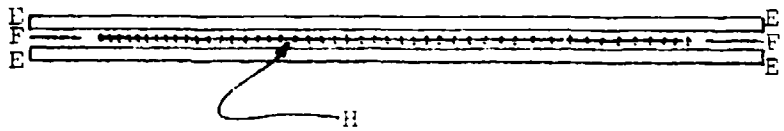

(b) Floating Roller Peel and DCB Crack Growth Specimen Layup Model

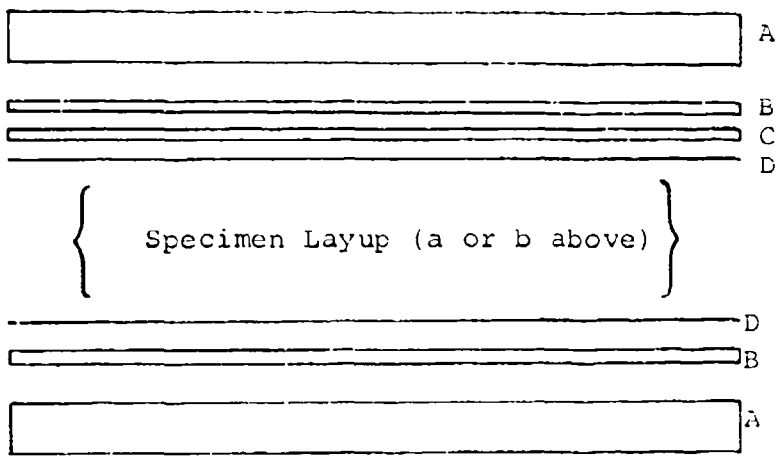

(c) Layup Stack Common to Both Type Specimen Layups

A - Upper or Lower Platten
B - 1/8" Aluminum Cauls
C - 1/8" Silicone Rubber Sheet
D - 5 mil Teflon Release Sheet
E - Panel Adherend
F - 5 mil Teflon Shim
G - Spacer (Thickness of Panel Adherend)
H - Adhesive (Film or Paste)

Figure III-1. Bonded Panel Layup Models.

TABLE III-1

MANUFACTURERS REQUIRED/RECOMMENDED
ADHES CURE SCHEDULES

Adhesive	Cure Time-Temperature-Pressure	Cure Cycle Notes
R7114	45 ± 5 minutes at 280 ± 5°F (138 ± 3°C) and 40 ± 10 psi (276 ± 69 KPa)	1
XA-180	45 ± 5 minutes at 280 ± 5°F (138 ± 3°C) and 40 ± 10 psi (276 ± 69 KPa)	1
EA9601NW	45 ± 5 minutes at 250 ± 5°F (121 ± 3°C) and 40 ± 10 psi (276 ± 69 KPa)	2
LR100-252	45 ± 5 minutes at 250 ± 5°F (121 ± 3°C) and 40 ± 10 psi (276 ± 69 KPa)	2
R382-7	60 ± 5 minutes at 250 ± 5°F (121 ± 3°C) and 40 ± 10 psi (276 ± 69 KPa)	3
MA-420	60 ± 5 minutes at 250 ± 5°F (121 ± 3°C) and 40 ± 10 psi (276 ± 69 KPa)	3
LR100-172	Mix 100 parts by weight of part A with 18 parts by weight of part B. 120 ± 5 minutes at 180 ± 5°F (82 ± 3°C) and 25 ± 5 psi (172 ± 35 KPa)	4

Cure Cycle Notes:

1. Required Cure Cycle (except as noted above).
   a. Pre-heat press to 250 ± 5°F (121 ± 3°C)
   b. Place bonding fixture and part into press at contact pressure
   c. Allow 3 to 5 minutes dwell time
   d. Apply 40 ± 10 psi (276 ± 69 KPa) pressure and increase press temperature to 280 ± 5°F (138 ± 3°C)
   e. Cure for 45 ± 5 minutes
   f. Remove bonding fixture and part from press
   g. Cool bonding fixture and part for 5 minutes at R.T.
   h. Remove part from bonding fixture
   i. Cool part
2. The same as 1 above except for step (d), the temperature remained at 250 ± 5°F (121 ± 3°C) throughout the cure cycle.
3. The same as 1 above except for step (d), the temperature remained at 250 ± 5F° (121 ± 3°C) throughout the cure cycle, and step (e), the cure time, which was increased to 60 ± 5 minutes.
4. Recommended cure cycle for LR100-172
   a. Place bonding fixture and part into a pre-heated press [180 ± 5°F (82 ± 3°C)]
   b. Apply 25 ± 5 psi (172 ± 35 KPa)
   c. Cure for 120 ± 5 minutes
   d. Cool bonding fixture and part to 150 ± 5°F (65 ± 3°C) at 25 ± 5 psi (172 ± 35 KPa)
   e. Remove bonding fixture and part from press

APPENDIX IV
SPECIMEN MACHINING PROCEDURES

Machined Lap-Shear Specimens

There were two types of machined lap shear specimens employed in this program: those used in the static lap shear tests and illustrated in Figure 1 (page 6), and those used in the stress-durability tests and illustrated in Figure 5 (page 12). The only difference between these two types of specimen is that the stress-durability specimens are 2 inches (5.1 cm) longer and have a hole in each end. Both were layed up in panel form as illustrated in Figure 1-a with five specimens obtained from each panel. All five specimens were finish-cut simultaneously from a panel on a gang mill using circular mill blades spaced one inch apart. During the milling operation the panels were clamped firmly in place in a special fixture to support the bondline during cutting and eliminate vibration damage. The clamping fixture is slotted to accommodate the mill blades. After milling, the hole position on the stress durability specimen was located by hand measurement and drilled to accommodate the gripping bolt in the spring fixture.

Preslotted (Finger) Lap-Shear Specimens

The finger specimens were obtained from a panel illustrated in Figure 1-b (page 6). The panel was cut into individual test specimens (five per panel) by bandsawing through the small webs connecting the specimens together.

Floating Roller Peel and DCB Crack Extension Specimens

The panels from which these types of specimens are obtained are illustrated in Figures 3 (page 10) and 7 (page 15). Four specimens were obtained from each peel panel and five specimens from each DCB panel. The DCB panels were 6 inches (15.24 cm) wide as fabricated. Each of these two types of

panel was cut into slightly oversized strips on a bandsaw then dry-milled to their respective final dimensions. The hole position in the DCB specimen was then located by hand measurement, drilled, and tapped.

APPENDIX V

ADHESIVE PROPERTY DATA FROM MANUFACTURERS' LITERATURE

Hysol LR100-172

2024-T3 Clad, FPL etch, no primer
Cure Cycle: 2.5 hours at 165°F (74°C), psi not specified

Lap Shear:	Exposure Cond.	Test Temp.	Strength psi	Strength MPa
	None	R.T.	4500	31.0
	None	200°F(93°C)	2000	13.8
	14 days @ 200°F(93°C) 95-100% R.H.	200°F(93°C)	3000	20.7

Hysol EA 9601 NW

2024-T3 Clad, chromic acid etched, no primer, 0.063 inch (0.16 cm) adherend
Cure cycle: 60 minutes at 250°F (121°C), 25-40 psi (172-276 KPa)

Lap Shear:	Exposure Cond.	Test Temp.	Strength psi	Strength MPa
	None	-67°F(-55°C)	5000	34.5
	None	77°F(37°C)	5300	36.5
	None	180°F(82°C)	4300	29.6
	10 min @ 250°F(121°C)	250°F(121°C)	2200	15.1

Reliabond R 382-7

Aluminum, etch and primer not specified
Cure cycle: 60 minutes at 250°F (121°C), 25 psi (172 KPa)

Lap Shear:	Exposure Cond.	Test Temp.	Strength psi	Strength MPa
	None	-67°F(-55°C)	4500	31.0
	None	R.T.	5120	35.3
	None	200°F(93°C)	2800	19.3

Reliabond R 7114

Aluminum, etch and primer not specified
Cure cycle: 45 minutes @ 285°F (141°C), 25-50 psi (172-345 KPa)

Lap Shear:	Exposure Cond.	Test Temp.	Strength psi	Strength MPa
	None	-67°F(-55°C)	5990	41.3
	None	R.T.	6140	42.3
	None	200°F(93°C)	4560	31.4
	14 days @ 200°F(93°C) % R.H. not specified	200°F(93°C)	2195	15.1

Hysol LR100-252 (EA 9652) - 0.085 lb/ft^2 (0.415 Kg/m^2) film

2024-T3 Clad, FPL etch, corrosion inhibiting primer, 0.063 inch (0.16 cm) adherend
Cure cycle: 45 minutes at 250°F (121°C), 40 psi (276 KPa)

Lap Shear:	Exposure Cond.	Test Temp.	Strength psi	Strength MPa
	None	-67°F(-55°C)	5040	34.7
	None	72°F(22°C)	4540	31.3
	None	200°F(93°C)	4040	27.8
	14 days @ 200°F(93°C) and 95% R.H.	200°F(93°C)	2370	16.3

3M AF-180

2024-T3 Clad, etch and primer not specified
Cure cycle: 90 minutes at 235°F (113°C), 35 psi (241 KPa)

Lap Shear:	Exposure Cond.	Test Temp.	Strength psi	Strength MPa
	None	-67°F(-55°C)	4500	31.0
	None	R.T.	5500	37.9
	None	180°F(82°C)	3000	20.7

McCann MA 429

Aluminum, etch and primer not specified
Cure cycle: 60 minutes at 250°F (121°C), 10-50 psi (69 to 345 KPa)

Lap Shear:	Exposure Cond.	Test Temp.	Strength psi	Strength MPa
	None	-67°F(-55°C)	5030	34.7
	None	R.T.	5400	37.2
	None	180°F(82°C)	4520	31.1

APPENDIX VI

INDIVIDUAL SPECIMEN LAP SHEAR TEST DATA

The data presented here are for the tests and results discussed in paragraphs 2.3.1 and 3.1.

INDIVIDUAL LAP SHEAR TEST RESULTS FOR R382-7 ADHESIVE

ON MACHINED SPECIMENS PREPARED WITH STANDARD FPL ETCH

Test Temp.		72°F (22°C) Dry				200°F (93°C) After Aging[1]			
Adher. Alloy	Primer	Spec. No.	Strength psi	Strength MPa	Failure[2] Mode	Spec. No.	Strength psi	Strength MPa	Failure[2] Mode
5052-H34	NONE	M5FNC				M5FNC			
		1-1	2192	15.1	40-60	3-2	1437	9.9	100-0
		1-3	2360	16.3	50-50	3-4	1277	8.8	90-10
		1-5	2587	17.8	40-60	4-1	1353	9.3	90-10
		2-2	2396	16.5	50-50	4-3	1387	9.6	90-10
		2-5	2544	17.5	40-60	4-5	1244	8.6	90-10
		Ave.	2416	16.7	40-60	Ave.	1340	9.2	90-10
		S.D.	158	1.1		S.D.	79	0.5	
	BR127	M5FBC				M5FBC			
		1-1	2193	5.1	40-0-0-60	3-2	1969	13.6	90-0-0-10
		1-3	2452	16.9	40-0-0-60	3-4	2358	16.3	90-0-0-10
		1-5	2556	17.6	50-0-0-50	4-1	2583	17.8	80-0-0-20
		2-2	2068	14.3	40-0-0-60	4-3	2753	19.0	70-0-0-30
		2-4	2120	14.6	40-0-0-60	4-5	2545	17.5	60-0-0-40
		Ave.	2278	15.7	40-0-0-60	Ave.	2442	16.8	85-0-0-15
		S.D.	214	1.5		S.D.	299	2.1	
	XA3950	M5FMC				M5FMC			
		1-1	2646	18.2	80-0-0-20	3-2	1636	11.3	60-0-0-40
		1-3	2596	7.9	70-0-0-30	3-4	1650	11.4	70-0-0-30
		1-5	2401	16.5	80-0-0-20	4-1	1562	10.8	70-0-0-30
		2-2	2012	13.9	90-0-0-10	4-3	1611	11.1	60-0-0-40
		2-4	2419	16.7	90-0-0-10	4-5	1588	10.9	70-0-0-30
		Ave.	2415	16.6	85-0-0-15	Ave.	1609	11.1	65-0-0-35
		S.D.	249	1.7		S.D.	36	0.3	
6061-T6	NONE	M6FNC				M6FNC			
		1-1	2949	20.3	0-100	3-2	1675	11.5	60-40
		1-3	3109	21.4	5-95	3-4	1722	11.9	70-30
		1-5	3001	20.7	10-90	4-1	1843	12.7	60-40
		2-2	3066	21.1	20-80	4-3	958	6.6	80-20
		2-4	2823	19.5	10-90	4-5	1113	7.7	90-10
		Ave.	2990	20.6	10-90	Ave.	1462	10.1	75-25
		S.D.	111	0.8		S.D.	398	2.7	
	BR127	M6FBC				M6FBC			
		1-1	3229	22.3	5-0-5-90	3-2	2233	15.4	10-0-0-90
		1-3	3089	21.2	10-0-90-0	3-4	1825	12.6	10-0-0-90
		1-5	3400	23.4	20-0-80-0	4-1	2371	16.3	30-0-0-70
		2-2	3771	26.0	20-0-80-0	4-3	2152	14.8	20-0-0-80
		2-4	3210	22.1	10-0-90-0	4-5	2056	14.2	40-0-0-60
		Ave.	3340	23.0	10-0-85-5	Ave.	2127	14.7	20-0-0-80
		S.D.	265	1.8		S.D.	204	1.4	
	XA3950	M6FMC				M6FMC			
		1-1	2929	20.2	80-0-0-20	3-1	1993	13.7	40-0-0-60
		1-3	2888	19.9	90-0-0-10	3-3	2085	14.4	30-0-0-70
		1-5	2705	18.6	80-0-0-20	3-5	1706	11.8	40-0-0-60
		2-2	3210	22.2	70-0-0-30	4-2	2004	13.8	30-0-0-70
		2-4	3029	20.9	60-0-0-40	4-4	1924	13.3	20-0-0-80
		Ave.	2954	20.4	80-0-0-20	Ave.	1942	13.4	30-0-0-70
		S.D.	189	1.3		S.D.	144	1.0	

NOTE: 1. Tested @ 200°F (93°C), after 14 days @ 200°F (93°C), 95-100% R.H.

2. **See Figure 9, page 18.**

INDIVIDUAL LAP SHEAR TEST RESULTS FOR 6061 NW ADHESIVE

ON MACHINED SPECIMENS PREPARED WITH STANDARD FPL ETCH

Test Temp.		72°F (22°C) Dry				200°F (93°C) After Aging[1]			
Adher. Alloy	Primer	Spec. No.	Strength psi	Strength MPa	Failure[2] Mode	Spec. No.	Strength psi	Strength MPa	Failure[2] Mode
5052-H34	NONE	M5FNB				M5FNB			
		1-2	3020	20.8	90-10	1-4	390	2.7	95-5
		2-3	3170	21.8	90-10	2-1	340	2.3	100-0
		4-2	3220	22.2	80-20	2-5	370	2.5	100-0
		5-4	2980	20.5	70-30	4-4	420	2.9	90-10
		6-4	3090	21.3	60-40	6-1	380	2.6	95-5
		Ave.	3090	21.3	75-25	Ave.	380	2.6	95-5
		S.D.	100	0.7		S.D.	292	0.2	
	BR127	M5FBB				M5FBB			
		1-2	2850	19.6	100-0-0-0	1-4	750	5.2	100-0-0-0
		2-4	2830	19.5	100-0-0-0	2-5	640	4.4	100-0-0-0
		4-1	3300	20.7	100-0-0-0	4-2	750	5.2	100-0-0-0
		5-5	2600	17.9	100-0-0-0	6-1	670	4.6	100-0-0-0
		6-5	3170	21.8	100-0-0-0	6-4	670	4.6	100-0-0-0
		Ave.	2950	20.3	100-0-0-0	Ave.	700	4.8	100-0-0-0
		S.D.	292	1.9		S.D.	54	0.4	
	XA3950	M5FMB				M5FMB			
		2-1	3230	22.3	90-0-0-10	2-2	530	3.7	100-0-0-0
		2-5	3090	21.3	100-0-0-0	4-2	460	3.2	100-0-0-0
		4-1	3230	22.3	95-0-0-5	4-5	500	3.4	100-0-0-0
		5-2	2950	20.3	100-0-0-0	5-3	640	4.4	100-0-0-0
		6-4	3000	20.7	95-0-0-5	6-5	490	3.4	100-0-0-0
		Ave.	3100	21.4	95-0-0-5	Ave.	530	3.6	100-0-0-0
		S.D.	130	0.9		S.D.	70	0.5	
6061-T6	NONE	M6FNB				M6FNB			
		1-2	4860	33.5	40-60	1-4	420	2.9	90-10
		2-3	4270	29.4	90-10	2-5	430	3.0	90-10
		3-2	4080	28.1	80-20	4-1	420	2.9	90-10
		4-5	4130	28.5	90-10	5-2	340	2.3	90-10
		6-1	3920	27.0	80-20	6-2	450	3.1	90-10
		Ave.	4250	29.3	75-25	Ave.	410	2.8	90-10
		S.D.	360	2.5		S.D.	40	0.3	
	BR127	M6FBB				M6FBB			
		1-1	4210	29.0	100-0-0-0	1-2	1200	8.3	100-0-0-0
		2-2	4390	30.3	100-0-0-0	2-3	1240	8.5	100-0-0-0
		3-3	4940	34.0	100-0-0-0	3-4	950	6.5	100-0-0-0
		4-4	4110	28.3	100-0-0-0	4-5	1000	6.9	100-0-0-0
		5-5	4050	27.9	100-0-0-0	6-1	1150	7.9	100-0-0-0
		Ave.	4340	29.9	100-0-0-0	Ave.	1110	7.6	100-0-0-0
		S.D.	360	2.5		S.D.	130	0.8	
	XA3950	M6FMB				M6FMB			
		2-1	3710	25.6	80-0-10-10	2-3	610	4.2	90-0-10-0
		3-5	3840	26.5	0-0-40-60	4-1	370	2.6	50-0-50-0
		4-2	3420	23.6	30-0-60-10	4-5	520	3.6	50-0-50-0
		5-3	3350	23.1	30-0-60-10	5-4	570	3.9	60-0-40-0
		6-4	3400	23.4	30-0-60-10	6-3	450	3.1	60-0-40-0
		Ave.	3540	24.4	35-0-45-20	Ave.	500	3.5	60-0-40-0
		S.D.	220	1.5		S.D.	90	0.7	

NOTE: 1. Tested @ 200°F (93°C), after 14 days @ 200°F (93°C), 95-100% R.H.

2. **See Figure 9, page 18.**

INDIVIDUAL LAP SHEAR TEST RESULTS FOR R 7114 ADHESIVE

ON MACHINED SPECIMENS PREPARED WITH STANDARD FPL ETCH

Test Temp.		72°F (22°C) Dry				200°F (93°C) After Aging[1]			
Adher. Alloy	Primer	Spec. No.	Strength psi	Strength MPa	Failure[2] Mode	Spec. No.	Strength psi	Strength MPa	Failure[2] Mode
5052 H34	NONE	M5FND				M5FND			
		1-1	4020	27.7	10-90	1-2	540	3.7	100-0
		1-3	3930	27.1	20-80	1-4	530	3.7	100-0
		1-5	4280	29.5	50-50	2-1	380	2.6	100-0
		2-2	4450	30.7	90-10	2-3	380	2.6	100-0
		2-4	4610	31.8	80-20	2-5	290	2.0	100-0
		Ave.	4260	29.4	50-50	Ave.	420	2.9	100-0
		S.D.	290	2.0		S.D.	110	.8	
	BR127	M5FBD				M5FBD			
		1-1	4350	30.0	90-0-0-10	1-2	850	5.9	0-0-0-100
		1-3	4380	30.2	80-0-0-20	1-4	870	6.0	0-0-0-100
		1-5	4210	29.0	80-0-0-20	2-1	750	5.2	0-0-0-100
		2-2	3770	26.0	80-0-0-20	2-3	640	4.4	0-0-0-100
		2-4	4160	28.7	70-0-0-30	2-5	680	4.7	0-0-10-90
		Ave.	4170	28.7	80-0-0-20	Ave.	760	5.2	0-0-0-100
		S.D.	250	1.7		S.D.	100	.7	
	XA3950	M5FMD				M5FMD			
		1-1	4500	31.0	0-0-90-10	1-2	810	5.6	25-0-0-75
		1-3	4630	31.9	0-0-80-20	1-4	920	6.3	30-0-0-70
		1-5	4440	30.6	10-0-60-30	2-1	660	5.5	20-0-0-80
		2-2	4730	32.6	10-0-40-50	2-3	850	5.9	10-0-0-90
		2-4	4430	31.4	0-0-70-30	2-5	900	6.2	20-0-0-80
		Ave.	4550	31.3	5-0-70-25	Ave.	870	6.0	20-0-0-80
		S.D.	130	.9		S.D.	50	.3	
6061 T6	NONE	M6FND				M6FND			
		1-1	5540	38.2	0-100	1-2	360	2.5	100-0
		1-3	5490	37.8	5-95	1-4	310	2.1	100-0
		1-5	5400	37.2	5-95	2-2	340	1.7	100-0
		2-1	3640	25.1	10-90	2-3	220	1.5	100-0
		2-4	5660	39.0	10-90	2-5	220	1.5	100-0
		Ave.	5550	38.2	5-95	Ave.	270	1.9	100-0
		S.D.	110	.8		S.D.	60	.4	
	BR127	M6FBD				M6FBD			
		3-1	5390	37.1	NOT AVAILABLE	3-2	580	4.0	5-0-0-95
		3-3	5110	35.2	" "	3-4	570	3.9	5-0-0-95
		3-5	5140	35.4	" "	4-1	460	3.2	0-0-0-100
		4-2	4380	30.2	" "	4-3	460	3.2	0-0-0-100
		4-4	4950	34.1	" "	4-5	470	3.2	0-0-0-100
		Ave.	5000	35.5	" "	Ave.	510	3.5	0-0-0-100
		S.D.	380	2.6		S.D.	60	.4	
	XA3950	M6FMD				M6FMD			
		1-1	5780	39.8	0-0-80-20	1-2	1210	8.6	10-0-0-90
		1-3	5610	38.7	0-0-70-30	1-4	1020	8.4	10-0-0-90
		1-5	5640	39.1	10-0-40-50	2-1	1090	7.5	20-0-0-80
		2-2	5500	38.0	Metal Failed	2-3	1060	7.3	10-0-0-90
		2-4	5300	36.9	[illegible]	2-5	910	6.3	10-0-0-90
		Ave.	5690	39.4	5-0-50-40	Ave.	1110	7.7	10-0-0-90
		S.D.	160	1.1		S.D.	140	1.0	

NOTES: 1. Tested @ 200°F (93°C), after 14 days @ 200°F (93°C), 95-100% R.H.

2. See Figure 9, page 18.

INDIVIDUAL LAP SHEAR TEST RESULTS FOR AF-180 ADHESIVE

ON MACHINED SPECIMENS PREPARED WITH STANDARD FPL ETCH

Test Temp.		72°F (22°C) Dry				200°F (93°C) After Aging[1]			
Adher. Alloy	Primer	Spec. No.	Strength psi	Strength MPa	Failure[2] Mode	Spec. No.	Strength psi	Strength MPa	Failure[2] Mode
5052 H34	NONE	M5FNE				M5FNE			
		1-1	4280	29.5	20-80	1-2	2160	14.9	90-10
		1-3	4350	30.0	20-80	1-4	2040	14.1	95-5
		1-5	4410	30.4	10-90	2-1	1900	13.1	90-10
		2-2	4450	30.7	10-90	2-3	1970	13.6	90-10
		2-4	4580	31.6	10-90	2-5	1910	13.2	95-5
		Ave.	4420	30.5	15-85	Ave.	2000	13.8	90-10
		S.D.	110	0.8		S.D.	110	0.8	
	BR127	M5FBE				M5FBE			
		1-1	3340	23.0	30-0-0-70	3-1	2180	15.0	40-0-0-60
		1-3	3630	25.0	20-0-40-40	3-3	2320	16.0	50-0-0-50
		1-5	3020	20.8	30-0-10-60	3-5	2210	15.2	50-0-0-50
		2-2	3460	23.8	30-0-20-50	4-2	2360	16.3	50-0-0-50
		2-4	3140	21.6	30-0-10-60	4-4	2400	16.5	40-0-0-60
		Ave.	3320	22.9	30-0-15-55	Ave.	2290	15.8	45-0-0-55
		S.D.	240	1.7		S.D.	100	0.7	
	XA3950	M5FME				M5FME			
		1-1	3610	24.9	0-0-10-90	1-2	1220	8.4	40-0-50-10
		1-3	4130	28.5	20-0-10-70	1-4	1320	9.1	70-0-30-0
		1-5	3550	24.5	10-0-10-80	2-1	1280	8.8	50-0-50-0
		2-2	3650	25.2	20-0-10-70	2-3	1360	9.4	50-0-50-0
		2-4	3840	26.5	10-0-20-70	2-5	1280	8.8	60-0-40-0
		Ave.	3760	25.9	10-0-10-80	Ave.	1290	8.9	55-0-45-0
		S.D.	240	1.7		S.D.	50	0.3	
6061 T6	NONE	M6FNE				M6FNE			
		1-1	4850	33.4	10-90	1-2	1880	13.0	90-10
		1-3	5010	34.5	10-90	1-4	1770	12.2	90-10
		1-5	4900	33.8	10-90	2-1	1620	11.2	100-0
		2-2	5240	36.1	10-90	2-3	1770	12.2	100-0
		2-4	5220	36.0	10-90	2-5	1700	11.7	100-0
		Ave.	5040	34.7	10-90	Ave.	1750	12.1	95-5
		S.D.	180	1.2		S.D.	100	0.7	
	BR127	M6FBE				M6FBE			
		1-1	4610	31.8	40-0-0-60	1-5	2320	16.0	30-0-0-70
		1-3	4720	32.5	40-0-0-60	4-1	2340	16.1	40-0-0-60
		2-5	4840	33.4	40-0-0-60	4-2	2250	15.5	50-0-0-50
		3-2	4729	32.5	30-0-0-70	4-4	2360	16.3	50-0-0-50
		3-4	4730	32.6	30-0-0-70	4-5	2300	15.9	50-0-0-50
		Ave.	4729	32.6	35-0-0-65	Ave.	2320	16.0	45-0-0-55
		S.D.	80	0.6		S.D.	50	0.3	
	XA3950	M6FME				M6FME			
		1-1	4850	33.4	0-0-10-90	1-2	2050	14.1	20-0-30-50
		1-5	4840	33.4	0-0-10-90	2-1	1970	13.6	30-0-20-50
		2-2	4950	33.9	0-0-10-90	2-5	1970	13.6	60-0-20-20
		3-4	4930	34.0	0-0-10-90	3-3	2100	14.5	50-0-20-30
		4-3	4820	33.2	0-0-10-90	4-2	1940	13.4	40-0-10-50
		Ave.	4880	33.6	0-0-10-90	Ave.	2000	13.8	40-0-20-40
		S.D.	60	0.4		S.D.	70	0.5	

NOTES: 1. Tested @ 200°F (93°C), after 14 days @ 200°F (93°C), 95-100% R.H.
2. See Figure 9, page 18.

INDIVIDUAL LAP SHEAR TEST RESULTS FOR LR100-172 ADHESIVE

ON MACHINED SPECIMENS PREPARED WITH STANDARD FPL ETCH

Test Temp.		72°F (22°C) Dry				200°F (93°C) After Aging[1]			
Adher. Alloy	Primer	Spec. No.	Strength psi	Strength MPa	Failure[2] Mode	Spec. No.	Strength psi	Strength MPa	Failure[2] Mode
5052-H34	NONE	M5FNA				M5FNA			
		4-1	2750	19.0	100-0	4-2	2000	13.8	100-0
		4-3	2710	18.7	100-0	4-4	2320	16.0	100-0
		4-5	2850	19.6	100-0	7.1	2820	19.4	100-0
		7-2	3870	26.7	100-0	7.3	2900	20.0	100-0
		7-4	2970	20.5	100-0	7.5	2510	17.3	100-0
		Ave.	3030	20.9	100-0	Ave.	2510	17.3	100-0
		S.D.	480	3.3		S.D.	370	2.6	
	BR127	M5FBA				M5FBA			
		4-1	2520	17.3	100-0-0-0	1-2	2620	18.1	100-0-0-0
		4-3	2900	20.0	100-0-0-0	1-5	2080	14.3	100-0-0-0
		4-5	2800	19.3	100-0-0-0	7-1	2790	19.2	100-0-0-0
		7-2	3940	27.2	100-0-0-0	7-3	2800	19.3	100-0-0-0
		7-4	3770	26.0	100-0-0-0	7-5	2460	17.0	100-0-0-0
		Ave.	3180	21.9	100-0-0-0	Ave.	2550	17.6	100-0-0-0
		S.D.	630	4.3		S.D.	300	2.1	
	XA3950	M5FMA				M5FMA			
		1-3	2980	20.5	0-0-100-0	1-4	1980	13.6	100-0-0-0
		1-5	3400	23.4	10-0-90-0	4-2	1970	13.6	90-0-10-0
		4-3	2730	18.8	10-0-90-0	4-4	1890	13.0	80-0-20-0
		5-1	2580	17.8	30-0-70-0	5-2	1970	13.6	90-0-10-0
		5-3	2790	19.2	20-0-80-0	5-4	2080	14.3	100-0-0-0
		Ave.	2900	20.0	15-0-85-0	Ave.	1980	13.6	90-0-10-0
		S.D.	320	2.2		S.D.	70	.5	
6061-T6	NONE	M6FNA				M6FNA			
		1-2	3350	23.1	100-0	1-4	2810	19.4	100-0
		2-3	3380	23.3	100-0	2-5	2940	20.3	100-0
		4-3	3310	22.8	100-0	4-2	3010	20.7	100-0
		5-4	2580	17.8	100-0	5-1	3020	20.8	100-0
		6-5	3150	21.7	100-0	6-2	2940	20.3	100-0
		Ave.	3150	21.7	100-0	Ave.	2940	20.3	100-0
		S.D.	330	2.3		S.D.	80	.6	
	BR-127	M6FBA				M6FBA			
		1-1	3360	23.2	95-0-5-0	1-2	1910	13.2	100-0-0-0
		2-2	3440	23.7	30-0-70-0	2-1	2300	15.9	100-0-0-0
		4-3	2720	18.7	100-0-0-0	4-4	2350	16.2	100-0-0-0
		5-4	3090	21.3	100-0-0-0	5-3	2360	16.3	100-0-0-0
		6-3	2790	19.2	100-0-0-0	6-1	1950	13.4	100-0-0-0
		Ave.	3080	21.2	85-0-15-0	Ave.	2170	15.0	100-0-0-0
		S.D.	330	2.2		S.D.	230	1.6	
	XA3950	M6FMA				M6FMA			
		1-1	2440	16.8	5-0-95-0	1-2	1950	13.4	100-0-0-0
		1-5	3090	21.3	10-0-90-0	2-3	2550	17.6	100-0-0-0
		2-2	2930	20.2	10-0-90-0	4-4	2110	14.5	100-0-0-0
		4-3	3470	23.9	50-0-50-0	5-1	2140	14.7	100-0-0-0
		5-4	3120	21.5	90-0-10-0	5-5	2090	14.4	100-0-0-0
		Ave.	3010	20.7	35-0-65-0	Ave.	2170	15.0	100-0-0-0
		S.D.	380	2.6		S.D.	230	1.6	

NOTES: 1. Tested @ 200°F (93°C), after 14 days @ 200°F (93°C), 45-100% R.H.

2. See Figure 9, page 18.

INDIVIDUAL LAP SHEAR TEST RESULTS FOR [illegible] ADHESIVE

ON FINGER SPECIMENS PREPARED WITH OPTIMIZED FPL ETCH

Test Temp.		72°F (22°C) Dry				200°F (93°C) After Aging[1]			
Adher. Alloy	Primer	Spec. No.	Strength psi	Strength MPa	Failure[2] Mode	Spec. No.	Strength psi	Strength MPa	Failure[2] Mode
5052-H34	NONE	F50NC				F50NC			
		1-1	3010	20.7	0-100	1-2	730	5.0	30-70
		1-3	2850	19.6	0-100	1-4	760	5.2	40-60
		1-5	2500	17.2	0-100	2-1	620	4.3	70-30
		2-2	2890	19.9	0-100	2-3	300	2.1	20-80
		2-4	3370	23.2	0-100	2-5	490	3.4	60-40
		Ave.	2920	20.1	0-100	Ave.	580	4.0	45-55
		S.D.	313	2.2		S.D.	188	1.3	
	BR127	F50BC				F50BC			
		1-1	2630	18.5	0-0-20-80	1-2	1220	8.4	0-0-0-100*
		1-3	2870	19.8	0-0-20-80	1-4	920	6.3	0-0-0-100
		1-5	2990	20.3	0-0-30-70	2-1	1020	7.0	0-0-0-100
		2-2	4140	28.5	0-0-40-60	2-3	920	6.3	0-0-0-100
		2-4	3550	24.4	0-0-40-60	2-5	720	5.0	0-0-0-100
		Ave.	3276	22.6	0-0-30-70	Ave.	970	6.7	0-0-0-100
		S.D.	505	3.5		S.D.	162	1.1	
	XA3950	F50MC				F50MC			
		1-1	3520	24.6	0-0-40-60	1-2	1440	9.9	0-0-30-70
		1-3	3300	22.7	0-0-40-60	1-4	1490	10.3	0-0-40-60
		1-5	3270	22.5	0-0-30-70	2-1	1770	12.2	0-0-20-80
		2-2	3270	22.5	0-0-50-50	2-3	1660	11.4	0-0-10-90
		2-4	3200	22.1	0-0-40-60	2-5	1710	11.7	0-0-20-80
		Ave.	3312	22.8	0-0-40-60	Ave.	1610	11.1	0-0-25-75
		S.D.	120	0.8		S.D.	138	1.0	
6061-T6	NONE	F60NC				F60NC			
		1-1	3763	25.9	30-70	1-2	2040	14.1	40-60
		1-3	3676	25.3	40-60	1-4	1862	12.8	40-60
		1-5	3600	24.8	30-70	2-1	1249	8.6	50-50
		2-2	3875	26.6	30-70	2-3	1200	8.0	55-45
		2-4	3664	25.2	20-80	2-5	1205	8.3	80-20
		Ave.	3714	25.6	30-70	Ave.	1604	10.4	55-45
		S.D.	103	0.7		S.D.	414	2.8	
	BR127	F60BC				F60BC			
		1-1	3939	27.1	0-40-0-60	1-2	1596	11.0	10-0-0-90
		1-3	3990	27.5	0-30-0-70	1-4	1556	10.7	10-0-0-90
		1-5	3939	27.1	0-20-0-80	2-1	1460	10.1	20-0-0-80
		2-2	3571	24.3	0-50-0-50	2-3	1400	9.7	20-0-0-80
		2-4	4000	27.6	0-40-0-60	2-5	1212	8.4	10-0-0-90
		Ave.	3878	26.7	0-35-0-65	Ave.	1445	10.0	13-0-0-88
		S.D.	201	1.4		S.D.	171	1.2	
	XA3950	F60MC				F60MC			
		1-1	3947	27.3	0-10-0-90	1-2	1401	9.6	10-0-0-90
		1-3	4040	27.8	0-30-0-70	1-4	1414	9.7	20-0-0-80
		1-5	3843	26.5	0-40-0-60	2-1	1212	8.4	10-0-0-90
		2-2	3870	26.7	0-50-0-50	2-3	1212	8.4	10-0-0-90
		2-4	3700	25.5	0-60-0-40	2-5	1300	9.0	10-0-0-90
		Ave.	3900	26.9	0-40-0-60	Ave.	1313	9.1	10-0-0-90
		S.D.	133	[illegible]		S.D.	111	[illegible]	

NOTE 1. Tested @ 200°F (93°C), after 14 days [illegible] (93°C) [illegible] 95% R.H.

2. See Figure 9, page 18.

INDIVIDUAL LAP SHEAR TEST RESULTS FOR 9601 NW ADHESIVE

ON FINGER SPECIMENS PREPARED WITH OPTIMIZED FPL ETCH

Test Temp.		72°F (22°C) Dry				200°F (93°C) After Aging[1]			
Adher. Alloy	Primer	Spec. No.	Strength psi	Strength MPa	Failure[2] Mode	Spec. No.	Strength psi	Strength MPa	Failure[2] Mode
5052-H34	NONE	F50NB				F50NB			
						1-1	190	1.3	90-10
						1-3	170	1.2	80-20
						1-5	180	1.2	80-20
						2-2	280	1.[illegible]	70-30
						2-4	210	1.4	60-40
		Ave.				Ave.	210	1.4	75-25
		S.D.				S.D.	40	.[illegible]	
	BR127	F50BB				F50BB			
						1-1	[illegible]	1.4	[illegible]
						1-3	240	3.4	[illegible]
						1-5	260	3.7	[illegible]
						2-2	240	3.4	[illegible]
						2-4	228	3.2	[illegible]
		Ave.				Ave.		[illegible]	[illegible]
		S.D.				S.D.		[illegible]	
	XA3950	F50MB				F50MB			
						1-1	530	3.7	[illegible]
						1-3	[illegible]	3.4	[illegible]
						1-5	490	3.4	[illegible]
						2-2	460	3.2	[illegible]
						2-4	[illegible]	4.[illegible]	[illegible]
		Ave.				Ave.	520	3.6	[illegible]
		S.D.				S.D.	80	.5	
[illegible]	NONE	F60NB				F60NB			
		1-2	[illegible]	[illegible]	[illegible]	1-1	390	2.7	100-[illegible]
		1-4	[illegible]	38.[illegible]	[illegible]	1-3	510	3.3	100-[illegible]
		2-1	[illegible]	3[illegible]	[illegible]	1-5	400	2.5	100-[illegible]
		2-3	[illegible]	3[illegible]	30-[illegible]	2-2	500	3.[illegible]	100-[illegible]
		2-[illegible]	[illegible]	[illegible]	10-[illegible]	2-4	500	4.1	100-[illegible]
		Ave.	[illegible]	34.[illegible]	[illegible]	Ave.	[illegible]	3.4	100-[illegible]
		S.D.	[illegible]	[illegible]		S.D.	[illegible]	.6	
	BR127	F60BB				F60BB			
		1-2	[illegible]	[illegible]	[illegible]	1-1	11[illegible]	7.6	[illegible]
		1-4	[illegible]	[illegible]	[illegible]	1-3	17[illegible]	12.[illegible]	[illegible]
		2-1	[illegible]	34.[illegible]	[illegible]	1-5	15[illegible]	[illegible]	[illegible]
		2-3	[illegible]	3[illegible]	[illegible]	2-2	[illegible]	6.[illegible]	[illegible]
		2-[illegible]	[illegible]	3[illegible]	[illegible]	2-4	10[illegible]	7.2	[illegible]
		Ave.	[illegible]	36.[illegible]	[illegible]	Ave.	12[illegible]	8.[illegible]	[illegible]
		S.D.				S.D.	370	2.[illegible]	
	XA3950	F60MB				F60MB			
		1-2	[illegible]	3[illegible]	[illegible]	1-1	1[illegible]	7.4	[illegible]
		1-4	[illegible]	37.[illegible]	[illegible]	1-3	1100	8.1	[illegible]
		2-1	[illegible]	3[illegible]	[illegible]	1-5	[illegible]	[illegible]	[illegible]
		2-3	[illegible]	36.[illegible]	[illegible]	2-2	1040	7.2	[illegible]
		2-[illegible]	[illegible]	[illegible]	[illegible]	2-4	1190	8.1	[illegible]
		Ave.	[illegible]	34.[illegible]	[illegible]	Ave.	[illegible]	7.2	[illegible]
		S.D.	[illegible]	[illegible]		S.D.	170	[illegible]	

NOTE: 1. Tested @ 200°F (93°C), after 14 days @ 200°F (93°C), 95-100% R.H.

2. See Figure 9, page 18.

INDIVIDUAL LAP SHEAR TEST RESULTS FOR R 7114 ADHESIVE

ON MACHINED SPECIMENS PREPARED WITH OPTIMIZED FPL ETCH

Test Temp.		72°F (22°C) Dry				200°F (93°C) After Aging[1]			
Adher. Alloy	Primer	Spec. No.	Strength psi	Strength MPa	Failure[2] Mode	Spec. No.	Strength psi	Strength MPa	Failure[2] Mode
5052-H34	NONE	M50ND				M50ND			
		1-1	4930	34.0	5-95	1-2	930	6.4	40-60
		1-3	4840	33.3	----[3]	1-4	1050	7.2	40-60
		1-5	4670	32.2	0-100	2-1	980	6.8	50-50
		2-2	4660	32.1	0-100	2-3	700	4.8	50-50
		2-4	4250	29.3	0-100	2-5	770	5.3	40-60
		Ave.	4670	32.2	0-100	Ave.	890	6.1	45-55
		S.D.	260	1.8		S.D.	150	1.0	
	BR127	M50BD				M50BD			
		1-1	4300	29.6	0-0-40-60	1-2	790	5.4	0-0-0-100
		1-3	4870	33.6	----[3]	1-4	960	6.6	0-0-0-100
		1-5	4840	33.4	----[3]	2-1	610	4.2	0-0-0-100
		2-2	4630	31.9	0-0-30-70	2-3	550	3.8	0-0-0-100
		2-4	4220	29.1	0-0-30-70	2-5	450	3.1	0-0-0-100
		Ave.	4570	31.5	0-0-35-65	Ave.	670	4.6	0-0-0-100
		S.D.	300	2.1		S.D.	200	1.4	
	XA3950	M50MD				M50MD			
		1-1	4800	33.1	0-0-10-90	1-2	440	3.0	0-0-10-90
		1-3	4780	32.9	0-0-20-80	1-4	410	2.8	0-0-0-100
		1-5	4700	32.4	0-0-30-70	2-1	620	4.3	0-0-0-100
		2-2	4810	33.1	0-0-40-60	2-3	800	5.5	0-0-0-100
		2-4	4970	34.2	70-0-30-0	2-5	650	4.5	0-0-0-100
		Ave.	4810	33.1	15-0-25-60	Ave.	590	4.1	0-0-0-100
		S.D.	100	0.7		S.D.	160	1.1	
6061-T6	NONE	M60ND				M60ND			
		1-1	5810	40.0	70-30	1-2	960	6.6	40-60
		1-3	5690	39.2	60-40	1-4	860	5.9	50-50
		1-5	5770	39.8	----[3]	2-1	570	3.9	30-70
		2-2	5700	39.3	10-90	2-3	570	3.9	50-50
		2-4	5430	37.4	10-90	2-5	620	4.3	40-60
		Ave.	5680	39.1	35-65	Ave.	720	5.0	40-60
		S.D.	150	1.0		S.D.	180	1.2	
	BR127	M60BD				M60BD			
		1-1	5220	36.0	0-0-10-90	1-2	570	3.9	NOT AVAILABLE
		1-3	4820	33.2	0-0-20-80	1-4	555	3.9	" "
		1-5	4910	33.8	0-0-10-90	2-1	680	4.7	" "
		2-2	5500	37.9	0-0-20-80	2-3	690	4.8	" "
		2-4	5590	38.5	0-0-0-100	2-5	890	6.1	" "
		Ave.	5210	36.0	0-0-10-90	Ave.	680	4.7	NOT AVAILABLE
		S.D.	350	3.0		S.D.	130	1.0	
	XA3950	M60MD				M60MD			
		1-1	5370	37.0	0-0-70-30	1-2	840	5.8	0-0-0-100
		1-3	5430	37.5	0-0-30-70	1-4	720	5.0	0-0-0-100
		1-5	5400	37.2	0-0-20-80	2-1	650	4.5	0-0-0-100
		2-2	5450	37.6	0-0-10-90	2-3	770	5.3	0-0-0-100
		2-4	5300	36.5	0-0-20-80	2-5	660	4.5	0-0-0-100
		Ave.	5410	37.3	0-0-30-70	Ave.	730	5.0	0-0-0-100
		S.D.	40	0.3		S.D.	80	1.0	

NOTES: 1. Tested @ 200°F (93°C), after 14 days @ 200°F (93°C), 95-100% R.H.
2. See Figure 9, page 18.
3. Adherend Failure.

INDIVIDUAL LAP SHEAR TEST RESULTS FOR AF-180 ADHESIVE
ON FINGER SPECIMENS PREPARED WITH OPTIMIZED FPL ETCH

Test Temp.		72°F (22°C) Dry				200°F (93°C) After Aging[1]			
Adher. Alloy	Primer	Spec. No.	Strength psi	Strength MPa	Failure[2] Mode	Spec. No.	Strength psi	Strength MPa	Failure[2] Mode
5052 H34	NONE	F50NE				F50NE			
		1-2	2080	14.3	10-90	1-1	1050	7.2	10-90
		1-4	2320	16.0	10-90	1-3	1110	7.6	10-90
		2-1	2120	14.6	10-90	1-5	1090	7.5	10-90
		2-3	2020	13.9	10-90	2-2	950	6.5	10-90
		2-5	2170	15.0	10-90	2-4	1100	7.6	10-90
		Ave.	2140	14.8	10-90	Ave.	1060	7.3	10-90
		S.D.	120	0.8		S.D.	70	0.4	
	BR127	F50BE				F50BE			
		1-2	2220	15.3	0-0-0-100	1-1	1080	7.4	0-0-0-100
		1-4	2220	15.3	0-0-0-100	1-3	1110	7.6	0-0-0-100
		2-1	2220	15.3	0-0-0-100	1-5	1080	7.4	0-0-0-100
		2-3	2180	15.0	0-0-0-100	2-2	1190	8.2	0-0-0-100
		2-5	2350	16.2	0-0-0-100	2-4	1140	7.8	0-0-0-100
		Ave.	2240	15.4	0-0-0-100	Ave.	1120	7.7	0-0-0-100
		S.D.	70	0.5		S.D.	50	0.3	
	XA3950	F50ME				F50ME			
		1-1	2630	18.1	0-0-0-100	1-1	1370	9.5	0-0-0-100
		1-3	2470	17.0	0-0-0-100	1-3	1440	10.0	0-0-0-100
		1-5	2470	17.0	0-0-0-100	1-5	1240	8.5	0-0-0-100
		2-2	2420	16.7	0-0-0-100	2-2	1290	8.9	0-0-0-100
		2-4	2450	16.9	0-0-0-100	2-4	1270	8.7	0-0-0-100
		Ave.	2490	17.1	0-0-0-100	Ave.	1320	9.1	0-0-0-100
		S.D.	80	0.5		S.D.	90	0.6	
6061 T6	NONE	F60NE				F60NE			
		1-2	3020	20.9	10-90	1-1	1390	9.6	30-70
		1-4	3220	22.2	10-90	1-3	1490	10.3	30-70
		2-1	3330	22.9	10-90	1-5	1590	11.0	40-60
		2-3	3270	22.5	10-90	2-2	1390	9.6	20-80
		2-5	2620	18.1	10-90	2-4	1680	11.6	20-80
		Ave.	3100	21.4	10-90	Ave.	1510	10.4	30-70
		S.D.	290	2.0		S.D.	130	0.9	
	BR127	F60BE				F60BE			
		1-2	2430	16.7	0-0-0-100	1-1	1160	8.0	0-0-0-100
		1-4	2550	17.6	0-0-0-100	1-3	1160	8.0	0-0-0-100
		2-1	2110	14.5	0-0-0-100	1-5	1060	7.3	0-0-0-100
		2-3	2300	15.8	0-0-0-100	2-2	1140	7.9	0-0-0-100
		2-5	2720	18.7	0-0-0-100	2-4	1130	7.8	0-0-0-100
		Ave.	2440	16.8	0-0-0-100	Ave.	1130	7.8	0-0-0-100
		S.D.	240	1.7		S.D.	40	0.3	
	XA3950	F60ME				F60ME			
		1-2	27[illegible]	1[illegible]	0-0-0-100	1-1	1160	8.0	0-0-0-100
		1-4	3[illegible]3	2[illegible]	0-0-0-100	1-3	1210	8.3	0-0-0-100
		2-1	[illegible]	1[illegible]	0-0-0-100	1-5	1220	8.4	0-0-0-100
		2-3	3[illegible]	2[illegible]	0-0-0-100	2-2	1210	8.3	0-0-0-100
		2-5	2[illegible]	1[illegible]	0-0-0-100	2-4	1180	8.1	0-0-0-100
		Ave.	2[illegible]	1[illegible]	0-0-0-100	Ave.	1194	8.2	0-0-0-100
		S.D.	70	1[illegible]		S.D.	130	0.9	

1. Tested at 200°F (93°C) after 14 days [illegible] 120°F (49°C) [illegible]
2. See Figure 9, page 18.

INDIVIDUAL LAP SHEAR TEST RESULTS FOR LR100-172 ADHESIVE

ON FINGER SPECIMENS PREPARED WITH OPTIMIZED FPL ETCH

Test Temp.		72°F (22°C) Dry				200°F (93°C) After Aging[1]			
Adher. Alloy	Primer	Spec. No.	Strength psi	Strength MPa	Failure[2] Mode	Spec. No.	Strength psi	Strength MPa	Failure[2] Mode
5052-H34	NONE	F50NA				F50NA			
		1-1	3290	22.7	100-0	1-2	2840	19.6	100-0
		1-3	2470	17.0	100-0	1-4	3020	20.8	100-0
		1-5	2600	17.9	100-0	2-1	2960	20.4	100-0
		2-2	3570	24.6	100-0	2-3	2690	18.5	100-0
		2-4	4060	28.0	100-0	2-5	2420	16.7	100-0
		Ave.	3200	22.0	100-0	Ave.	2790	19.2	100-0
		S.D.	670	4.9		S.D.	240	1.7	
	BR127	F50BA				F50BA			
		1-1	3430	23.6	100-0-0-0	1-2	3150	21.7	20-0-80-0
		1-3	3210	22.1	100-0-0-0	1-4	2890	19.9	40-0-60-0
		1-5	3190	22.0	100-0-0-0	2-1	2990	20.6	60-0-40-0
		2-2	4310	29.7	----[3]	2-3	3030	20.9	40-0-60-0
		2-4	4360	30.0	----[3]	2-5	3130	21.6	40-0-60-0
		Ave.	3700	25.5	100-0-0-0	Ave.	3040	21.0	40-0-60-0
		S.D.	580	4.0		S.D.	110	.7	
	XA3950	F50MA				F50MA			
		1-1	2550	17.6	10-0-90-0	1-2	2720	18.7	10-0-90-0
		1-3	2720	18.7	20-0-80-0	1-4	2970	20.5	10-0-90-0
		1-5	2670	18.4	40-0-60-0	2-1	2420	16.7	40-0-60-0
		2-2	4320	29.8	----[3]	2-3	3020	20.8	20-0-80-0
		2-4	4340	29.9	----[3]	2-5	2770	19.1	50-0-50-0
		Ave.	3320	22.9	25-0-75-0	Ave.	2780	19.2	20-0-80-0
		S.D.	920	6.4		S.D.	280	1.9	
6061-T6	NONE	F60NA				F60NA			
		1-1	4800	33.1	100-0	1-2	3160	21.8	100-0
		1-3	4850	33.4	100-0	1-4	2960	20.4	100-0
		1-5	4900	33.4	100-0	2-1	2780	19.2	100-0
		2-2	4500	31.0	100-0	2-3	2770	19.1	100-0
		2-4	4460	30.7	100-0	2-5	2750	19.0	100-0
		Ave.	4700	32.4	100-0	Ave.	2880	19.8	100-0
		S.D.	210	1.4		S.D.	180	1.2	
	BR127	F60BA				F60BA			
		1-1	4100	28.3	0-0-100-0	1-2	2660	18.3	0-100-0-0
		1-3	4220	29.1	0-0-100-0	1-4	3330	23.0	0-100-0-0
		1-5	4190	28.9	0-0-100-0	2-1	3640	25.1	0-100-0-0
		2-2	4250	29.3	0-0-100-0	2-3	3050	21.0	0-100-0-0
		2-4	4400	30.3	0-0-100-0	2-5	2930	20.2	0-100-0-0
		Ave.	4230	29.1	0-0-100-0	Ave.	3120	21.5	0-100-0-0
		S.D.	110	.7		S.D.	380	2.6	
	XA3950	F60MA				F60MA			
		1-1	4810	33.1	0-0-100-0	1-2	3370	23.2	0-0-100-0
		1-3	4670	32.2	0-0-100-0	1-3	3160	21.8	0-0-100-0
		1-5	4400	30.3	0-0-100-0	2-1	2720	18.7	10-0-90-0
		2-2	4450	30.7	0-0-100-0	2-3	3100	21.4	0-0-100-0
		2-4	4450	30.7	0-0-100-0	2-5	3030	20.9	10-0-90-0
		Ave.	4550	31.1	0-0-100-0	Ave.	3080	21.2	6-0-95-0
		S.D.	180	1.2		S.D.	240	1.6	

NOTES: 1. Tested @ 200°F (93°C), after 14 days @ 200°F (93°C), 95-100% R.H.
2. See Figure 9, page 18.
3. Adherend Failure.

INDIVIDUAL LAP SHEAR TEST RESULTS FOR R382-7 ADHESIVE

ON FINGER SPECIMENS PREPARED WITH STANDARD FPL ETCH

Test Temp.		72°F (22°C) Dry				200°F (93°C) After Aging[1]			
Adher. Alloy	Primer	Spec. No.	Strength psi	Strength MPa	Failure[2] Mode	Spec. No.	Strength psi	Strength MPa	Failure[2] Mode
5052-H34	NONE	F5FNC				F5FNC			
		1-1	2525	17.4	40-60	1-2	414	2.9	90-10
		1-3	2727	18.8	30-70	1-4	343	2.4	90-10
		1-5	2525	17.4	30-70	2-1	276	1.9	90-10
		2-2	2590	17.2	40-60	2-3	310	2.1	80-20
		2-4	2549	9.0	40-60	2-5	180	1.2	90-10
		Ave.	2565	17.7	35-65	Ave.	304	2.1	90-10
		S.D.	92	0.6		S.D.	86	0.6	
	BR127	F5FBC				F5FBC			
		1-1	2350	16.2	40-0-0-60	1-2	1020	7.0	90-0-0-10
		1-3	3100	21.4	70-0-0-30	1-4	940	6.5	80-0-0-20
		1-5	2700	18.6	50-0-0-50	2-1	700	4.8	80-0-0-20
		2-2	2600	17.9	40-0-0-60	2-3	1220	8.4	90-0-0-10
		2-4	2650	18.3	50-0-0-50	2-5	850	5.9	90-0-0-10
		Ave.	2680	18.5	50-0-0-50	Ave.	946	6.5	90-0-0-10
		S.D.	271	1.9		S.D.	194	1.3	
	XA3950	F5FMC				F5FMC			
		1-1	2600	17.9	40-0-0-60	1-2	1280	8.8	0-0-0-100
		1-3	2800	19.3	40-0-0-60	1-4	1320	9.1	5-0-0-95
		1-5	2650	18.3	40-0-0-60	2-1	1320	9.1	10-0-0-90
		2-2	2700	18.6	30-0-0-70	2-3	1204	8.3	10-0-0-90
		2-4	2700	18.6	40-0-0-60	2-5	1200	8.3	20-0-0-80
		Ave.	2690	18.5	40-0-0-60	Ave.	1265	8.7	10-0-0-90
		S.D.	74	0.5		S.D.	60	0.4	
6061-T6	NONE	F6FNC				F6FNC			
		1-2	3630	25.0	10-90	1-1	544	3.8	10-90
		1-4	3200	22.1	0-100	1-3	416	2.9	95-5
		2-1	3520	24.3	10-90	1-5	418	2.9	80-20
		2-3	3653	25.2	30-70	2-2	694	4.8	90-10
		2-5	3786	26.1	5-95	2-4	704	4.9	100-0
		Ave.	3558	24.5	10-90	Ave.	555	3.8	85-15
		S.D.	221	1.5		S.D.	141	1.0	
	BR127	F6FBC				F6FBC			
		1-1	4740	32.7	0-0-20-80	1-2	2040	14.1	20-0-0-80
		1-3	4320	29.8	0-0-20-80	1-4	1992	13.7	30-0-0-70
		1-5	4330	29.8	0-0-30-70	2-1	1345	9.3	10-0-0-90
		2-2	4137	28.5	0-0-10-90	2-3	1192	8.2	10-0-0-90
		2-4	3363	23.2	0-0-10-90	2-5	1194	8.2	10-0-0-90
		Ave.	4179	28.8	0-0-20-80	Ave.	1553	10.7	15-0-0-85
		S.D.	506	3.5		S.D.	428	3.0	
	XA3950	F6FMC				F6FMC			
		1-1	4118	28.4	10-0-0-90	1-2	1549	10.7	40-0-0-60
		1-3	4700	32.4	0-0-10-90	1-4	1531	10.6	50-0-0-50
		1-5	4082	28.1	NOT AVAILABLE	2-1	1280	8.8	60-0-0-40
		2-2	460[illegible]	31.7	0-20-0-80	2-3	1495	10.3	50-0-0-50
		2-4	4700	32.4	10-0-0-90	2-5	1569	10.8	60-0-0-40
		Ave.	4441	30.6	5-5-0-90	Ave.	1485	10.2	50-0-0-50
		S.D.	31[illegible]	[illegible]		S.D.	118	0.8	

NOTE: 1. Tested @ 200°F (93°C), after 14 days @ 200°F (93°C), 95-100% R.H.

2. See Figure 9, page 10.

INDIVIDUAL LAP SHEAR TEST RESULTS FOR 9601 NW ADHESIVE
ON FINGER SPECIMENS PREPARED WITH STANDARD FPL ETCH

Test Temp.		72°F (22°C) Dry				200°F (93°C) After Aging[1]			
Adher. Alloy	Primer	Spec. No.	Strength psi	Strength MPa	Failure[2] Mode	Spec. No.	Strength psi	Strength MPa	Failure[2] Mode
5052-H34	NONE	F5FNB				F5FNB			
		1-4	3380	23.3	20-80	1-3	270	1.8	100-0
		2-5	3280	22.6	30-70	1-5	290	2.0	100-0
		4-1	3440	23.7	20-80	3-1	180	1.2	100-0
		4-3	3920	27.0	20-80	4-2	180	1.2	100-0
		4-5	3470	23.9	20-80	4-4	220	1.5	100-0
		Ave.	3500	24.1	20-80	Ave.	230	1.6	100-0
		S.D.	246	1.7		S.D.	54	0.4	
	BR127	F5FBB				F5FBB			
		1-2	2800	19.3	90-0-0-10	1-1	1140	7.9	80-0-0-20
		1-4	3000	20.7	90-0-0-10	1-3	980	6.8	80-0-0-20
		2-1	3280	22.5	90-0-0-10	1-5	880	6.1	60-0-0-40
		2-3	3330	22.9	90-0-0-10	2-2	560	3.9	30-0-0-70
		2-5	3030	20.9	80-0-0-20	2-4	580	4.0	30-0-0-70
		Ave.	3090	21.3	90-0-0-10	Ave.	830	5.7	55-0-0-45
		S.D.	219	1.5		S.D.	254	1.8	
	XA3950	F5FMB				F5FMB			
		1-2	3300	22.7	40-0-0-60	1-1	780	5.4	100-0-0-0
		1-4	2800	19.3	20-0-0-80	1-3	680	4.7	100-0-0-0
		2-1	3000	20.7	40-0-0-60	1-5	440	3.0	80-0-0-20
		2-3	3400	23.4	5-0-0-95	2-2	600	4.1	95-0-0-5
		2-5	3200	22.1	10-0-0-90	2-4	440	3.0	60-0-0-40
		Ave.	3140	21.6	25-0-0-75	Ave.	590	4.1	90-0-0-10
		S.D.	241	1.7		S.D.	151	1.0	
6061-T6	NONE	F6FNB				F6FNB			
		2-2	4420	30.5	10-90	2-1	260	1.8	100-0
		2-4	4760	32.8	10-90	2-3	330	2.3	100-0
		3-1	4850	33.4	10-90	2-5	260	1.8	100-0
		3-3	5030	34.7	10-90	3-2	570	3.7	100-0
		3-5	4790	33.0	10-90	3-4	530	3.7	100-0
		Ave.	4770	32.9	10-90	Ave.	390	2.7	100-0
		S.D.	220	1.5		S.D.	150	1.0	
	BR127	F6FBB				F6FBB			
		1-2	4980	34.3	10-0-40-50	1-1	1850	12.8	30-0-0-70
		1-4	5180	35.7	10-0-30-60	1-3	1940	13.4	40-0-0-60
		2-3	5040	34.7	10-0-30-60	1-5	1110	7.6	10-0-0-90
		3-1	5080	35.0	10-0-40-50	2-2	1630	11.3	50-0-0-50
		3-5	4730	32.6	10-0-0-90	2-4	1730	11.9	60-0-0-40
		Ave.	5000	34.5	10-0-30-60	Ave.	1650	11.4	25-0-0-75
		S.D.	162	1.2		S.D.	320	2.2	
	XA3950	F6FMB				F6FMB			
		2-1	4900	33.8	0-0-10-90	2-2	1660	11.4	70-0-30-0
		2-3	5020	34.6	0-0-20-80	2-4	1790	12.3	80-0-10-10
		2-5	4760	32.8	0-0-10-90	3-1	890	6.1	70-0-0-30
		3-2	4960	34.2	0-0-20-80	3-3	1140	7.9	10-0-0-40
		3-4	5020	34.6	0-0-40-60	3-5	1280	8.8	60-0-0-40
		Ave.	4930	34.0	0-0-20-80	Ave.	1350	9.3	60-0-10-30
		S.D.	110	0.8		S.D.	370	2.6	

NOTE: 1. Tested @ 200°F (93°C), after 14 days @ 200°F (93°C), 95-100% R.H.
2. See Figure 9, page 18.

INDIVIDUAL LAP SHEAR TEST RESULTS FOR R 7114 ADHESIVE

ON FINGER SPECIMENS PREPARED WITH STANDARD FPL ETCH

Test Temp.		72°F (22°C) Dry				200°F (93°C) After Aging[1]			
Adher. Alloy	Primer	Spec. No.	Strength psi	Strength MPa	Failure[2] Mode	Spec. No.	Strength psi	Strength MPa	Failure[2] Mode
5052 H34	NONE	F5FND				F5FND			
		1-1	4300	29.6	20-0-0-80	1-2	200	1.4	100-0-0-0
		1-3	4000	27.6	10-0-0-90	1-4	180	1.2	100-0-0-0
		1-5	3950	27.2	20-0-0-80	2-1	200	1.4	100-0-0-0
		2-2	4080	28.7	10-0-0-90	2-3	210	1.5	100-0-0-0
		2-4	4340	29.9	20-0-0-80	2-5	210	1.5	100-0-0-0
		Ave.	4130	28.5	15-0-0-85	Ave.	200	1.4	100-0-0-0
		S.D.	180	1.2		S.D.	10	.1	
	BR127	F5FBD				F5FBD			
		1-1	3700	25.5	100-0-0-0	1-2	500	3.4	0-0-0-100
		1-3	3600	24.8	100-0-0-0	1-4	550	3.8	0-0-0-100
		1-5	333	22.9	90-0-0-10	2-1	710	4.9	0-0-0-100
		2-2	390	26.9	10-0-80-10	2-3	690	4.8	10-0-0-90
		2-4	398	27.4	30-0-60-10	2-5	630	4.3	10-0-0-90
		Ave.	3700	25.5	65-0-30-5	Ave.	620	4.3	5-0-0-95
		S.D.	260	1.8		S.D.	90	.6	
	XA3950	F5FMD				F5FMD			
		1-1	3510	24.2	20-0-0-80	1-2	410	2.9	10-0-0-90
		1-3	3970	27.4	40-0-0-60	1-4	350	2.4	15-0-0-85
		1-5	3610	24.9	30-0-0-70	2-1	280	1.9	10-0-0-90
		2-2	3470	23.9	30-0-0-70	2-3	320	2.2	10-0-0-90
		2-4	3370	23.2	40-0-0-60	2-5	180	1.2	10-0-0-90
		Ave.	3590	24.7	30-0-0-70	Ave.	310	2.1	10-0-0-90
		S.D.	230	1.6		S.D.	80	.6	
6061 T6	NONE	F6FND				F6FND			
		1-1	5050	34.8	10-90	1-2	360	2.5	100-0
		1-3	5400	37.2	10-90	1-4	340	2.3	100-0
		1-5	4410	30.4	5-95	2-1	320	2.2	100-0
		2-2	5690	39.2	10-90	2-3	380	2.6	100-0
		2-4	6080	41.9	20-80	2-5	380	2.6	100-0
		Ave.	5350	36.7	10-90	Ave.	350	2.4	100-0
		S.D.	640	4.4		S.D.	20	.1	
	BR127	F6FBD				F6FBD			
		1-2	5150	35.5	40-0-30-30	1-1	700	4.8	0-0-0-100
		1-4	5440	37.5	40-0-60-0	1-3	500	3.4	0-0-0-100
		2-1	5200	35.8	10-0-0-90	1-5	500	3.4	0-0-0-100
		2-[illegible]	5560	38.3	20-0-0-80	2-2	340	2.3	0-0-0-100
		2-[illegible]	5510	38.0	20-0-0-80	2-4	400	2.8	0-0-0-100
		Ave.	5370	37.0	25-0-0-75	Ave.	490	3.4	0-0-0-100
		S.D.	180	1.2		S.D.	140	1.0	
	XA3950	F6FMD				F6FMD			
		1-1	5750	39.6	0-0-40-60	1-[illegible]	880	6.1	10-0-0-90
		1-3	5750	39.6	0-0-40-60	1-4	740	5.1	10-0-0-90
		1-5	6000	41.3	0-0-30-70	2-1	750	5.2	20-0-0-80
		2-2	5780	39.8	0-0-10-90	2-3	620	4.3	10-0-0-90
		2-4	5590	38.5	10-0-10-60	2-5	510	3.5	10-0-0-90
		Ave.	5770	39.7	0-0-25-75	Ave.	700	4.8	10-0-0-90
		S.D.	150	1.0		S.D.	140	1.0	

NOTE 1. Tested @ 200°F (93°C), after 14 days @ 200°F (93°C), 95-100% R.H.

2. See Figure 9, page 18.

INDIVIDUAL LAP SHEAR TEST RESULTS FOR AF-180 ADHESIVE

ON FINGER SPECIMENS PREPARED WITH STANDARD FPL ETCH

Test Temp.		72°F (22°C) Dry				200°F (93°C) After Aging[1]			
Adher. Alloy	Primer	Spec. No.	Strength psi	Strength MPa	Failure[2] Mode	Spec. No.	Strength psi	Strength MPa	Failure[2] Mode
5052 H34	NONE	F5FNE				F5FNE			
		1-1	3700	25.5	20-80	1-2	1440	9.9	80-20
		1-3	3800	26.2	20-80	1-4	1580	10.9	80-20
		1-5	3500	24.1	20-80	2-1	1350	9.3	20-80
		2-2	3150	21.7	10-90	2-3	1480	10.2	40-60
		2-4	3300	22.7	10-90	2-5	1460	10.1	60-40
		Ave.	3490	24.1	15-85	Ave.	1460	10.1	55-45
		S.D.	270	1.9		S.D.	80	0.6	
	BR127	F5FBE				F5FBE			
		1-1	2840	19.6	30-0-20-50	1-2	2080	14.3	20-0-30-50
		1-3	3140	21.6	40-0-20-40	1-4	1920	13.2	30-0-30-40
		1-5	2860	19.7	30-0-30-40	2-1	1380	9.5	0-0-0-100
		2-2	2850	19.6	10-0-10-80	2-3	1570	10.8	0-0-10-90
		2-4	2700	18.6	10-0-10-80	2-5	1320	9.1	0-0-0-100
		Ave.	2880	19.8	25-0-15-60	Ave.	1650	11.4	10-0-15-75
		S.D.	160	1.1		S.D.	330	2.3	
	XA3950	F5FME				F5FME			
		1-1	3310	22.8	0-0-20-80	1-2	1430	9.9	60-0-30-10
		1-3	3470	23.9	0-0-20-80	1-4	1470	10.1	70-0-20-10
		1-5	3430	23.6	0-0-20-80	2-1	1410	9.7	0-0-40-60
		2-2	2650	18.3	0-0-10-90	2-3	1310	9.0	0-0-30-70
		2-4	2500	17.2	0-0-0-100	2-5	1310	9.0	0-0-30-70
		Ave.	3070	21.2	0-0-15-85	Ave.	1390	9.6	30-0-30-40
		S.D.	460	3.2		S.D.	60	0.4	
6061 T6	NONE	F6FNE				F6FNE			
		1-1	5110	35.2	10-90	1-2	2270	15.6	50-50
		1-3	5090	35.1	10-90	1-4	2180	15.0	----[3]
		1-5	4820	33.2	10-90	2-1	2220	15.3	40-60
		2-2	4850	33.4	10-90	2-3	2160	14.9	[illegible]
		2-4	4720	32.5	10-90	2-5	2090	14.4	40-60
		Ave.	4920	33.9	10-90	Ave.	2180	15.0	40-60
		S.D.	170	1.2		S.D.	70	0.5	
	BR127	F6FBE				F6FBE			
		1-2	2540	17.5	50-0-0-50	1-1	4670	32.2	40-0-0-60
		1-4	2470	17.0	50-0-0-50	1-3	5000	34.5	50-0-0-50
		2-1	1910	13.2	0-0-10-90	1-5	4700	32.4	30-0-0-70
		2-3	2220	[illegible]	10-0-0-90	2-2	4120	28.4	20-0-0-80
		2-5	1820	12.5	20-0-0-80	2-4	4190	28.9	10-0-0-90
		Ave.	2190	15.1	25-0-0-75	Ave.	4530	31.2	30-0-0-70
		S.D.	330	2.3		S.D.	370	2.6	
	XA3950	F6FME				F6FME			
		1-1	4650	32.0	0-0-10-90	1-2	2610	18.0	10-0-20-70
		1-3	5150	35.5	0-0-10-90	1-4	2560	17.6	10-0-10-80
		1-5	4450	31.0	0-0-0-100	2-1	2430	16.7	20-0-20-60
		2-2	4940	34.0	0-0-10-90	2-3	2220	15.3	20-0-20-60
		2-4	4900	34.0	0-0-10-90	2-5	2300	15.9	20-0-20-60
		Ave.	4820	33.2	[illegible]	Ave.	2420	16.7	15-0-20-65
		S.D.	270	2.0		S.D.	160	1.1	

NOTES: 1. Tested @ 200°F (93°C), after 14 days @ 200°F (93°C), 95-100% R.H.
2. See Figure 9, page 18.
3. Adherend Failure.

INDIVIDUAL LAP SHEAR TEST RESULTS FOR LR100-172 ADHESIVE

ON FINGER SPECIMENS PREPARED WITH STANDARD FPL ETCH

Test Temp.		72°F (22°C) Dry				200°F (93°C) After Aging[1]			
Adher. Alloy	Primer	Spec. No.	Strength psi	Strength MPa	Failure[2] Mode	Spec. No.	Strength psi	Strength MPa	Failure[2] Mode
5052-H34	NONE	F5FNA				F5FNA			
		1-1	2420	16.7	100-0	1-2	2870	19.8	100-0
		1-3	2800	19.3	100-0	1-4	2870	19.8	100-0
		1-5	2550	17.6	100-0	2-1	2660	17.3	100-0
		2-2	2400	16.5	100-0	2-3	2510	14.2	100-0
		2-4	2430	16.7	100-0	2-5	2060	14.2	100-0
		Ave.	2520	17.4	100-0	Ave.	2590	17.9	100-0
		S.D.	170	1.2		S.D.	340	2.3	
	BR127	F5FBA				F5FBA			
		1-1	2160	14.9	100-0-0-0	1-2	2810	19.4	100-0-0-0
		1-3	2690	18.5	100-0-0-0	1-4	2990	20.6	100-0-0-0
		1-5	2590	17.9	100-0-0-0	2-1	2540	17.5	100-0-0-0
		2-2	2630	18.1	90-0-10-0	2-3	2650	18.3	100-0-0-0
		2-4	3040	20.9	100-0-0-0	2-5	2750	19.0	100-0-0-0
		Ave.	2620	18.1	100-0-0-0	Ave.	2750	19.0	100-0-0-0
		S.D.	320	2.2		S.D.	170	1.2	
	XA3950	F5FMA				F5FMA			
		1-7	2680	18.5	100-0-0-0	1-2	2510	17.3	100-0-0-0
		1-3	2250	15.5	100-0-0-0	1-4	2530	17.4	100-0-0-0
		1-5	2500	17.2	100-0-0-0	2-1	2380	16.4	100-0-0-0
		2-2	2260	15.6	100-0-0-0	2-3	NO TEST		
		2-4	2320	16.0	100-0-0-0	2-5	2220	15.3	100-0-0-0
		Ave.	2400	16.5	100-0-0-0	Ave.	2410	16.6	100-0-0-0
		S.D.	180	1.2		S.D.	140	1.0	
6061-T6	NONE	F6FNA				F6FNA			
		1-1	4150	28.6	100-0	1-2	3260	22.5	100-0
		1-3	3740	25.8	100-0	1-4	3300	22.7	100-0
		1-5	3840	26.5	100-0	2-1	3050	21.0	100-0
		2-2	3480	24.0	100-0	2-3	3110	21.4	100-0
		2-4	3730	25.7	100-0	2-5	3050	21.0	100-0
		Ave.	3790	26.1	100-0	Ave.	3150	21.7	100-0
		S.D.	240	1.7		S.D.	120	.8	
	BR127	F6FBA				F6FBA			
		1-1	4140	28.5	100-0-0-0	1-2	3450	23.8	70-0-30-0
		1-3	3570	24.6	95-0-5-0	1-4	3170	21.8	80-0-20-0
		1-5	3960	27.3	100-0-0-0	2-1	3530	24.3	100-0-0-0
		2-2	3640	25.1	100-0-0-0	2-3	3610	24.9	75-0-25-0
		2-4	4160	28.7	100-0-0-0	2-5	3180	21.9	70-0-30-0
		Ave.	3890	26.8	100-0-0-0	Ave.	3390	23.4	80-0-20-0
		S.D.	280	1.9		S.D.	200	1.4	
	XA3950	F6FMA				F6FMA			
		1-1	3300	22.7	60-0-40-0	1-2	3200	22.1	50-0-50-0
		1-3	5600	38.6	90-0-10-0	1-4	3330	22.9	100-0-0-0
		1-5	3980	27.4	100-0-0-0	2-1	2530	17.4	70-0-30-0
		2-2	4060	28.0	0-0-100-0	2-3	3140	21.6	80-0-20-0
		2-4	4120	28.4	0-0-100-0	2-5	3100	21.4	60-0-40-0
		Ave.	4210	29.0	50-0-50-0	Ave.	3060	21.1	70-0-30-0
		S.D.	840	5.8		S.D.	310	2.1	

NOTES: 1. Tested @ 200°F (93°C), after 14 days @ 200°F (93°C), 95-100% R.H.
2. See Figure 9, page 18.

INDIVIDUAL LAP SHEAR TEST RESULTS FOR FM382-7 ADHESIVE
ON MACHINED SPECIMENS PREPARED WITH OPTIMIZED FPL ETCH

Test Temp.		72°F (22°C) Dry				200°F (93°C) After Aging[1]			
Adher. Alloy	Primer	Spec. No.	Strength psi	Strength MPa	Failure[2] Mode	Spec. No.	Strength psi	Strength MPa	Failure[2] Mode
5052-H34	NONE	M5ONC				M5ONC			
		7-1	4040	27.8	30-70	7-2	1820	12.5	20-80
		7-3	3520	24.3	40-60	7-4	1990	13.7	20-80
		7-5	3650	25.2	30-70	8-1	1980	13.6	30-70
		8-2	3500	24.1	40-60	8-3	1670	11.5	40-60
		8-4	3460	23.8	30-70	8-5	1720	11.9	30-70
		Ave.	3630	25.0	35-65	Ave.	1830	12.6	30-70
		S.D.	236	1.6		S.D.	146	1.0	
	BR127	M5OBC				M5OBC			
		1-1	2620	18.1	0-0-40-60	3-2	1200	8.3	0-0-0-100
		1-2	2740	18.9	20-0-20-60	3-4	1080	7.4	0-0-0-100
		1-5	3000	20.7	10-0-20-70	4-1	1290	8.9	0-0-0-100
		2-2	2550	17.6	0-0-80-20	4-3	1350	9.3	0-0-0-100
		2-4	2830	19.6	0-0-20-80	4-5	1250	8.6	0-0-0-100
		Ave.	2750	19.0	5-0-35-60	Ave.	1240	8.5	0-0-0-100
		S.D.	178	1.2		S.D.	105	0.7	
	XA3950	M5OMC				M5OMC			
		1-1	3220	22.2	90-0-0-10	3-1	1680	11.6	0-0-0-100
		1-3	2990	20.6	80-0-0-20	3-3	1800	12.4	0-0-0-100
		1-5	3270	22.1	90-0-0-10	3-5	1830	12.6	0-0-0-100
		2-2	2960	20.4	70-0-0-30	4-2	2050	14.1	0-0-0-100
		2-4	3380	23.3	60-0-0-40	4-4	1800	12.4	0-0-0-100
		Ave.	3160	21.8	80-0-0-20	Ave.	1830	12.6	0-0-0-100
		S.D.	182	1.3		S.D.	135	0.9	
6061-T6	NONE	M6ONC				M6ONC			
		1-1	4711	32.5	90-10	1-2	2240	15.4	10-90
		1-3	3925	27.0	95-5	1-4	2227	15.3	40-60
		1-5	3748	25.8	90-10	2-1	182	15.0	40-60
		2-2	4010	27.7	90-10	2-3	2120	14.6	30-70
		2-4	3740	25.8	95-5	2-5	2162	14.9	40-60
		Ave.	4028	27.8	90-10	Ave.	2186	15.1	30-70
		S.D.	400	2.8		S.D.	49	0.3	
	BR127	M6OBC				M6OBC			
		1-1	3491	24.1	0-30-0-70	1-2	4065	28.0	0-0-30-70
		1-3	4108	28.3	0-40-0-60	1-4	3880	26.7	0-0-30-60
		1-5	3698	25.5	0-30-0-70	2-1	3444	23.7	0-0-30-70
		2-2	4020	27.7	0-40-0-60	2-3	3150	21.7	0-0-20-80
		2-4	4004	27.6	0-50-0-50	2-5	2971	20.5	0-0-20-80
		Ave.	3864	26.6	0-40-0-60	Ave.	3502	24.1	0-0-25-75
		S.D.	260	1.8		S.D.	466	3.2	
	XA3950	M6OMC				M6OMC			
		3-1	4155	28.6	30-0-0-70	3-2	2238	15.4	10-0-0-90
		3-3	4158	28.6	40-0-0-60	3-4	2144	14.8	20-0-0-80
		3-5	4265	29.4	30-0-0-70	4-1	2038	14.0	0-0-0-100
		4-2	3438	23.7	0-40-60-0	4-3	1825	12.8	0-0-0-100
		4-4	3933	27.1	0-40-60-0	4-5	1618	11.2	0-0-0-100
		Ave.	3989	27.5	20-15-25-40	Ave.	1973	13.6	5-0-0-95
		S.D.	331	2.3		S.D.	251	1.7	

NOTE: 1. Tested @ 200°F (93°C), after 14 days @ 200°F (93°C), 95-100% R.H.
2. See Figure 9, page 18.

INDIVIDUAL LAP SHEAR TEST RESULTS FOR 9601NW ADHESIVE

ON MACHINED SPECIMENS PREPARED WITH OPTIMIZED FPL ETCH

Test Temp.		72°F (22°C) Dry				200°F (93°C) After Aging[1]			
Adher. Alloy	Primer	Spec. No.	Strength psi	Strength MPa	Failure[2] Mode	Spec. No.	Strength psi	Strength MPa	Failure[2] Mode
5052-H34	NONE	M50NB				M50NB			
		1-1	4130	28.5	40-60	1-2	850	5.9	NOT AVAILABLE
		2-1	4100	28.2	50-50	1-4	1000	6.9	80-20
		2-2	4130	28.5	40-60	2-3	1100	7.6	70-30
		3-2	4130	28.5	60-40	3-1	1070	7.4	70-30
		6-3	4130	28.5	40-60	6-2	1050	7.2	70-30
		Ave.	4120	28.4	45-55	Ave.	1010	7.0	70-30
		S.D.	10	0.1		S.D.	100	.7	
	BR127	M50BB				M50BB			
		1-1	4590	31.6	0-0-20-80	1-2	1140	7.9	0-0-10-90
		2-2	4380	30.2	0-0-40-60	2-3	1720	11.9	0-0-30-70
		4-4	4430	30.5	0-0-30-70	5-1	1370	9.4	10-0-10-80
		5-5	4380	30.2	0-0-70-30	6-2	1330	9.2	0-0-10-90
		6-3	4390	30.3	0-0-30-70	6-5	1240	8.5	0-0-10-90
		Ave.	4430	30.6	0-0-40-60	Ave.	1360	9.4	0-0-15-85
		S.D.	90	.6		S.D.	220	1.5	
	XA3950	M50MB				M50MB			
		1-1	3720	25.6	NOT AVAILABLE	1-2	1070	7.4	NOT AVAILABLE
		2-2	4280	29.5	" "	2-4	650	4.5	" "
		3-3	4240	29.2	" "	3-4	790	5.4	" "
		5-4	3940	27.2	" "	5-1	710	4.9	" "
		6-5	4160	28.7	" "	5-5	580	4.0	" "
		Ave.	4070	28.0	" "	Ave.	760	5.2	" "
		S.D.	230	1.6		S.D.	190	1.4	
6061-T6	NONE	M60NB				M60NB			
		1-1	5110	35.3	30-70	1-5	1700	11.7	70-30
		1-4	5030	34.7	20-80	2-1	1530	10.5	70-30
		2-2	4920	33.9	10-90	2-4	1460	10.1	70-30
		4-3	4900	33.8	20-80	4-1	420	2.9	100-0
		4-5	4740	32.7	40-60	4-4	440	3.0	100-0
		Ave.	4940	34.1	25-75	Ave.	1110	7.7	80-20
		S.D.	140	1.0		S.D.	630	4.3	
	BR127	M60BB				M60BB			
		1-1	5360	36.9	0-0-70-30	1-2	1110	7.7	0-0-20-80
		1-3	5390	37.1	0-0-70-30	1-4	1100	7.6	0-0-10-90
		1-5	4950	34.1	0-0-10-90	2-1	1180	8.1	40-0-0-60
		2-2	5740	39.6	0-0-70-30	2-3	1190	8.2	40-0-0-60
		2-4	5640	38.9	0-0-70-30	2-5	1090	7.5	30-0-0-70
		Ave.	5410	37.3	0-0-60-40	Ave.	1130	7.8	20-0-5-75
		S.D.	310	2.1		S.D.	50	.3	
	XA3950	M60MB				M60MB			
		1-2	5010	34.5	0-0-10-90	1-3	1910	13.2	0-0-30-70
		2-1	5000	34.5	0-0-20-80	2-2	2230	15.4	0-0-40-60
		4-1	5340	36.8	METAL FAILURE	4-2	2100	14.5	0-0-0-100
		4-4	5050	34.8	0-0-0-100	4-5	1870	12.9	0-0-10-90
		5-4	5050	34.8	0-0-0-100	5-3	1530	10.5	10-0-20-70
		Ave.	5090	35.1	0-0-5-95	Ave.	1930	13.3	0-0-20-80
		S.D.	140	1.0		S.D.	270	1.8	

NOTE: 1. Tested @ 200°F (93°C), after 14 days @ 200°F (93°C), 95-100% R.H.

2. See Figure 9, page 18.

INDIVIDUAL LAP SHEAR TEST RESULTS FOR R 7114 ADHESIVE
ON FINGER SPECIMENS PREPARED WITH OPTIMIZED FPL ETCH

Test Temp.		72°F (22°C) Dry				200°F (93°C) After Aging[1]			
Adher. Alloy	Primer	Spec. No.	Strength psi	Strength MPa	Failure[2] Mode	Spec. No.	Strength psi	Strength MPa	Failure[2] Mode
5052 H34	NONE	F5OND				F5OND			
		1-1	2640	18.2	0-100	1-2	80	0.6	0-100
		1-4	3110	21.4	0-100	1-4	80	0.6	0-100
		2-1	3400	23.4	0-100	2-1	90	0.6	20-80
		2-3	2810	19.4	0-100	2-3	80	0.6	10-90
		2-5	2820	19.4	0-100	2-5	90	0.6	20-80
		Ave.	2960	20.4	0-100	Ave.	80	0.6	10-90
		S.D.	300	2.0		S.D.	10	0.0	
	BR127	F5OBD				F5OBD			
		1-1	2830	19.5	0-0-0-100	1-2	110	0.8	0-0-0-100
		1-3	2750	18.9	0-0-0-100	1-4	90	0.6	0-0-0-100
		1-5	2700	18.6	0-0-0-100	2-1	90	0.6	0-0-0-100
		2-2	3100	21.4	0-0-0-100	2-3	110	0.8	0-0-0-100
		2-4	3130	21.6	0-0-0-100	2-5	90	0.6	0-0-0-100
		Ave.	2900	20.0	0-0-0-100	Ave.	100	0.7	0-0-0-100
		S.D.	200	1.4		S.D.	10	0.1	
	XA3950	F5OMD				F5OMD			
		1-1	2870	19.9	0-0-0-100	1-2	90	0.6	0-0-0-100
		1-3	2970	20.5	0-0-0-100	1-4	70	0.5	0-0-0-100
		1-5	2810	19.4	0-0-0-100	2-1	130	0.9	0-0-0-100
		2-2	3420	23.6	0-0-0-100	2-3	80	0.6	0-0-0-100
		2-4	3200	22.0	0-0-0-100	2-5	100	0.7	0-0-0-100
		Ave.	3050	21.0	0-0-0-100	Ave.	90	0.6	0-0-0-100
		S.D.	250	1.7		S.D.	20	0.1	
6061 T6	NONE	F6OND				F6OND			
		1-1	2050	14.1	0-0-0-100	1-2	100	0.7	0-0-0-100
		1-3	2230	15.4	0-0-0-100	1-4	110	0.8	0-0-0-100
		1-5	2100	14.5	0-0-0-100	2-1	70	0.5	0-0-0-100
		2-2	2740	18.9	0-0-0-100	2-3	70	0.5	0-0-0-100
		2-4	2870	19.8	0-0-0-100	2-5	80	0.6	0-0-0-100
		Ave.	2400	16.5	0-0-0-100	Ave.	90	0.6	0-0-0-100
		S.D.	380	2.6		S.D.	20	0.1	
	BR127	F6OBD				F6OBD			
		1-1	3580	24.7	0-0-0-100	1-2	120	0.8	0-0-0-100
		1-3	3280	22.6	0-0-0-100	1-4	110	0.8	0-0-0-100
		1-5	3030	20.9	0-0-0-100	2-1	110	0.8	0-0-0-100
		2-2	3350	23.1	0-0-0-100	2-3	120	0.8	0-0-0-100
		2-4	3270	22.5	0-0-0-100	2-5	180	1.2	0-0-0-100
		Ave.	3300	22.7	0-0-0-100	Ave.	130	0.9	0-0-0-100
		S.D.	200	1.4		S.D.	30	0.2	
	XA3950	F6OMD				F6OMD			
		1-1	80	0.6	0-0-0-100	1-2	80	0.6	0-0-0-100
		1-3	80	0.6	0-0-0-100	1-4	80	0.6	0-0-0-100
		1-5	100	0.7	0-0-0-100	2-1	100	0.7	0-0-0-100
		2-2	120	0.8	0-0-0-100	2-3	120	0.8	0-0-0-100
		2-4	120	0.8	0-0-0-100	2-5	120	0.8	0-0-0-100
		Ave.	100	0.7	0-0-0-100	Ave.	100	0.7	0-0-0-100
		S.D.	20	0.1		S.D.	20	0.1	

NOTES: 1. Tested @ 200°F (93°C), after 14 days @ 200°F (93°C), 95-100% R.H.
2. See Figure 9, page 18.

INDIVIDUAL LAP SHEAR TEST RESULTS FOR AF-180 ADHESIVE
ON MACHINED SPECIMENS PREPARED WITH OPTIMIZED FPL ETCH

Test Temp.		72°F (22°C) Dry				200°F (93°C) After Aging[1]			
Adher. Alloy	Primer	Spec. No.	Strength psi	Strength MPa	Failure Mode[2]	Spec. No.	Strength psi	Strength MPa	Failure Mode[2]
5052 H34	NONE	M5ONE				M5ONE			
		1-1	4560	31.4	10-90	3-2	2700	18.6	5-95
		1-3	4590	31.6	10-90	3-4	2680	18.4	5-95
		1-5	4680	32.3	10-90	4-1	1910	13.2	10-90
		2-2	4690	32.3	10-90	4-3	2320	16.0	10-90
		2-4	4770	32.9	10-90	4-5	1800	12.4	10-90
		Ave.	4660	32.1	10-90	Ave.	2280	15.7	10-90
		S.D.	80	0.6		S.D.	420	2.9	
	BR127	M5OBE				M5OBE			
		1-1	3730	25.7	0-0-10-90	3-2	1140	7.8	0-0-0-100
		1-3	3810	26.3	0-0-10-90	3-4	1230	8.5	0-0-0-100
		1-5	3910	27.0	0-0-10-90	4-1	1180	8.1	0-0-0-100
		2-2	3890	26.8	0-0-10-90	4-3	1150	7.9	0-0-0-100
		2-4	3870	26.7	0-0-10-90	4-5	1010	6.9	0-0-0-100
		Ave.	3840	26.5	0-0-10-90	Ave.	1140	7.9	0-0-0-100
		S.D.	70	0.5		S.D.	80	0.6	
	XA3950	M5OME				M5OME			
		1-1	3960	27.3	0-0-0-100	3-2	1500	10.4	0-0-0-100
		1-3	4030	27.8	0-0-0-100	3-4	1370	9.4	0-0-0-100
		1-5	4110	28.3	0-0-0-100	4-1	1180	8.1	0-0-0-100
		2-2	3910	27.0	0-0-0-100	4-3	1480	10.2	0-0-0-100
		2-4	3900	26.9	0-0-0-100	4-5	1340	9.2	0-0-0-100
		Ave.	3980	27.5	0-0-0-100	Ave.	1370	9.5	0-0-0-100
		S.D.	90	0.6		S.D.	130	0.9	
6061 T6	NONE	M6ONE				M6ONE			
		1-1	5700	39.3	0-100	1-2	3400	23.4	10-90
		1-5	5410	37.3	0-100	2-3	3280	22.6	10-90
		2-2	5260	36.2	10-90	3-4	2030	14.0	20-80
		3-3	4620	31.8	0-100	4-1	2350	16.2	40-60
		4-4	5110	35.2	0-100	4-5	2320	16.0	40-60
		Ave.	5220	36.0	0-100	Ave.	2680	18.5	25-75
		S.D.	400	2.8		S.D.	620	4.3	
	BR127	M6OBE				M6OBE			
		1-1	4670	32.2	0-0-10-90	3-1	2060	14.2	10-0-0-90
		1-3	4630	31.9	0-0-10-90	3-3	2090	14.4	10-0-0-90
		1-5	4580	31.6	0-0-0-100	3-5	2250	15.5	20-0-0-80
		2-2	4860	33.5	0-0-10-90	4-2	2660	18.3	0-0-0-100
		2-5	4810	33.1	0-0-10-90	4-4	2420	16.7	0-0-0-100
		Ave.	4710	32.4	0-0-10-90	Ave.	2290	15.8	10-0-0-90
		S.D.	120	0.8		S.D.	250	1.7	
	XA3950	M6OME				M6OME			
		1-1	4960	37.2	0-0-0-100	1-3	3000	20.7	0-0-0-100
		2-2	5160	35.6	0-0-0-100	2-1	2120	14.6	0-0-0-100
		3-1	5000	34.5	0-0-0-100	3-2	2450	16.9	10-0-0-90
		3-3	4920	33.9	0-0-0-100	3-4	2340	16.1	20-0-0-80
		4-1	4750	32.7	0-0-0-100	4-3	2220	15.3	10-0-0-90
		Ave.	4960	34.2	0-0-0-100	Ave.	2630	18.1	10-0-0-90
		S.D.	150	1.0		S.D.	410	2.8	

NOTES: 1. Tested @ 200°F (93°C), after 14 days @ 200°F (93°C), 95-100% R.H.
2. See Figure 9, page 18.

INDIVIDUAL LAP SHEAR TEST RESULTS FOR LH100-172 ADHESIVE

ON MACHINED SPECIMENS PREPARED WITH OPTIMIZED FPL ETCH

Test Temp.		72°F (22°C) Dry				200°F (93°C) After Aging[1]			
Adher. Alloy	Primer	Spec. No.	Strength psi	Strength MPa	Failure[2] Mode	Spec. No.	Strength psi	Strength MPa	Failure[2] Mode
5052-H34	NONE	M50NA				M50NA			
		1-1	4310	29.7	10-90	1-2	2750	19.0	100-0
		1-4	4140	28.5	10-90	1-3	2840	19.6	100-0
		2-1	4280	29.5	10-90	4-2	2710	18.7	100-0
		2-2	4290	29.6	10-90	8-1	3220	22.2	100-0
		4-1	3590	24.7	90-10	8-3	2900	20.0	100-0
		Ave.	4120	28.4	25-75	Ave.	2980	19.8	100-0
		S.D.	300	2.1		S.D.	200	1.4	
	BR127	M50BA				M50BA			
		1-1	4230	29.1	0-0-100-0	1-2	2710	18.7	80-0-20-0
		1-5	4160	28.7	30-0-70-0	2-3	2800	19.3	50-0-50-0
		2-2	3880	26.7	0-0-100-0	4-1	2790	19.2	60-0-40-0
		4-3	4490	30.9	0-0-100-0	4-5	2540	17.5	40-0-60-0
		5-4	4160	28.7	10-0-90-0	5-2	2610	18.0	NA
		Ave.	4180	28.8	10-0-90-0	Ave.	2690	18.5	75-0-25-0
		S.D.	220	1.5		S.D.	110	0.8	
	XA3950	M50MA				M50MA			
		1-1	4140	28.5	0-0-100-0	1-2	2710	18.7	100-0-0-0
		1-5	4360	30.0	0-0-100-0	3-1	2770	19.1	100-0-0-0
		4-1	4450	30.7	0-0-100-0	3-4	2730	18.8	100-0-0-0
		3-3	4470	30.6	70-0-30-0	4-3	2790	----	100-0-0-0
		4-4	4590	31.6	----[3]	4-5	2640	----	100-0-0-0
		Ave.	4400	30.3	20-0-80-0	Ave.	2730	----	100-0-0-0
		S.D.	170	1.1		S.D.	60	----	
6061 T6	NONE	M60NA				M60NA			
		3-1	4780	32.9	100-0	3-2	2570	17.7	100-0
		3-3	4890	33.7	100-0	3-4	2610	18.0	100-0
		3-5	4860	33.5	100-0	5-1	2820	19.4	100-0
		5-2	4940	34.0	100-0	5-3	2860	19.6	100-0
		5-4	4940	34.0	100-0	5-5	2830	19.5	100-0
		Ave.	4880	33.6	100-0	Ave.	2740	18.9	100-0
		S.D.	60	0.4		S.D.	140	1.0	
	BR127	M60BA				M60BA			
		1-5	5180	35.7	0-0-100-0	1-3	3440	23.7	20-0-80-0
		2-3	5450	37.6	0-0-100-0	2-2	3640	25.1	10-0-90-0
		3-5	5250	36.2	0-0-100-0	3-2	3410	23.5	60-0-40-0
		5-2	5200	35.8	0-0-100-0	5-1	3630	25.0	10-0-90-0
		5-4	5300	36.5	0-0-100-0	5-3	3700	25.5	0-0-100-0
		Ave.	5280	36.4	0-0-100-0	Ave.	3540	24.4	20-0-80-0
		S.D.	40	0.3		S.D.	110	0.8	
	XA3950	M60MA				M60MA			
		5-2	5290	36.5	0-0-100-0	1-1	2650	18.3	0-0-100-0
		5-4	5160	35.6	0-0-100-0	1-4	2760	19.0	0-0-100-0
		6-1	5160	35.6	0-0-100-0	2-1	3060	21.1	10-0-90-0
		6-3	5170	35.6	0-0-100-0	2-3	3200	22.1	5-0-95-0
		6-5	5180	35.7	0-0-100-0	2-5	3200	22.1	10-0-90-0
		Ave.	5190	35.8	0-0-100-0	Ave.	2970	20.5	5-0-95-0
		S.D.	60	0.4		S.D.	250	1.8	

NOTES: 1. Tested @ 200°F (93°C), after 14 days @ 200°F (93°C), 95-100% R.H.
2. See Figure 9, page 18.
3. Adherend Failure.

INDIVIDUAL LAP SHEAR TEST RESULTS FOR BR100-252 ADHESIVE

ON MACHINED SPECIMENS PREPARED WITH OPTIMIZED FPL ETCH

Test Temp.		72°F (22°C) Dry				200°F (93°C) After Aging[1]			
Adher. Alloy	Primer	Spec. No.	Strength psi	Strength MPa	Failure[2] Mode	Spec. No.	Strength psi	Strength MPa	Failure[2] Mode
5052 H34	NONE	M60NG				M60NG			
		1-2	4420	30.5	30-70	1-3	3120	21.5	50-50
		1-4	4440	30.6	30-70	1-5	3110	21.4	60-40
		1-7	4290	29.6	40-60	2-1	3470	23.9	50-50
		2-3	4460	30.7	50-50	2-4	3340	23.0	50-50
		2-5	4300	29.6	40-60	2-6	3550	24.5	50-50
		Ave.	4380	30.2	40-60	Ave.	3320	22.9	50-50
		S.D.	80	0.6		S.D.	200	1.4	
	BR127	M60BG				M60BG			
		1-3	4420	30.5	0-0-90-10	1-1	2200	15.2	0-0-10-90
		1-6	4720	32.5	0-0-90-10	1-5	2750	18.9	10-0-10-80
		2-1	4640	32.	0-0-90-10	1-7	2130	14.7	0-0-10-90
		2-3	4560	31.4	0-0-90-10	2-4	2960	20.4	10-0-20-70
		2-5	4270	29.4	0-0-80-20	2-7	2500	17.2	10-0-10-80
		Ave.	4520	31.1	0-0-90-10	Ave.	2510	17.3	5-0-10-85
		S.D.	180	1.2		S.D.	350	2.4	
	XA3950	M60MG				M60MG			
		1-1	4820	33.2	0-0-10-90	1-3	2900	20.0	0-0-10-90
		1-4	4630	31.9	0-0-10-90	1-6	3030	20.9	0-0-10-90
		1-7	4520	31.1	0-0-0-100	2-1	3150	21.7	0-0-0-100
		2-2	4560	31.4	0-0-10-90	2-4	3130	21.6	0-0-10-90
		2-5	4620	31.9	0-0-0-100	2-7	3080	21.2	0-0-10-90
		Ave.	4600	31.7	0-0-5-95	Ave.	3060	21.1	0-0-10-90
		S.D.	110	0.8		S.D.	100	0.5	
6061 T6	NONE	M60NG				M60NG			
		1-1	5150	35.5	20-80	1-2	2250	15.5	80-20
		1-3	5230	36.0	20-80	1-4	2350	16.2	80-20
		1-5	5000	34.5	30-70	1-6	2250	15.5	70-30
		2-2	4930	34.0	40-60	2-1	2200	15.2	70-30
		2-4	4660	32.1	40-60	2-3	2230	15.4	80-20
		2-6	5050	34.8	40-60	2-5	2260	15.6	80-20
		Ave.	5000	34.5	30-70	Ave.	2260	15.6	75-25
		S.D.	200	1.4		S.D.	50	0.3	
	BR127	M60BG				M60BG			
		1-1	5050	34.8	0-0-0-100	1-2	1950	13.4	10-0-10-80
		1-3	5040	34.7	0-0-0-100	1-4	1650	11.4	0-0-20-80
		1-5	5290	36.4	0-0-0-100	1-6	1770	12.2	20-0-10-70
		2-2	5370	37.0	0-0-0-100	2-1	1840	12.7	10-0-10-80
		2-4	5100	35.1	0-0-0-100	2-3	1890	13.0	10-0-10-80
		2-6	5480	37.8	0-0-0-100	2-5	1990	13.7	10-0-10-80
		Ave.	5220	36.0	0-0-0-100	Ave.	1850	12.7	10-0-10-80
		S.D.	190	1.3		S.D.	120	0.8	
	XA3950	M60MG				M60MG			
		1-1	5250	36.2	0-0-0-100	1-2	1800	12.4	10-0-10-80
		1-3	5400	37.2	0-0-10-90	1-4	1770	12.2	20-0-10-70
		1-5	5340	36.8	0-0-10-90	1-6	1900	27.4	10-0-10-80
		2-2	5480	37.8	0-0-0-100	2-1	3080	24.3	0-0-10-90
		2-4	5200	35.1	0-0-10-90	2-3	3530	24.5	0-0-10-90
		2-6	5310	36.6	0-0-0-100	2-5	3560	24.5	0-0-10-90
		Ave.	5340	36.8	0-0-5-95	Ave.	2760	19.0	5-0-10-85
		S.D.	80	0.9		S.D.	1040	7.1	

NOTES: 1. Tested @ 200°F (93°C), after 14 days @ 200°F (93°C), 95-100% R.H.
2. See Figure 9, page 18.

INDIVIDUAL LAP SHEAR TEST RESULTS FOR MA 429 ADHESIVE

ON MACHINED SPECIMENS PREPARED WITH OPTIMIZED FPL ETCH

Test Temp.		72°F (22°C) Dry				200°F (93°C) After Aging[1]			
Adher. Alloy	Primer	Spec. No.	Strength psi	Strength MPa	Failure[2] Mode	Spec. No.	Strength psi	Strength MPa	Failure[2] Mode
5052 H34	NONE	M5ONF				M5ONF			
		1-1	4800	33.1	60-40	1-3	1460	10.1	90-10
		1-4	4510	31.1	70-30	1-6	1630	11.2	90-10
		1-7	4830	33.3	70-30	2-1	1230	8.5	90-10
		2-2	4750	32.7	70-30	2-4	1180	8.1	90-10
		2-6	4660	32.1	70-30	2-5	1250	8.6	90-10
		Ave.	4710	32.5	70-30	Ave.	1350	9.3	90-10
		S.D.	130	0.9		S.D.	190	1.3	
	BR127	M5OBF				M5OBF			
		1-2	4530	31.2	90-10	1-3	2140	14.7	20-80
		1-6	4450	30.7	90-10	1-5	2280	15.7	30-70
		2-1	4520	31.1	90-10	1-7	2330	16.1	30-70
		2-4	4440	30.6	90-10	2-3	2280	15.7	40-60
		2-6	4510	31.1	90-10	2-7	2160	14.9	20-80
		Ave.	4490	30.9	90-10	Ave.	2240	15.4	25-75
		S.D.	40	0.3		S.D.	80	0.6	
	XA3950	M5OMF				M5OMF			
		1-1	4620	31.8	80-20	1-3	2280	15.7	10-90
		1-4	4630	31.9	80-20	1-6	2100	14.5	10-90
		1-7	4440	30.6	80-20	2-1	1940	13.4	20-80
		2-3	4450	30.7	80-20	2-4	2040	14.1	20-80
		2-6	4470	30.8	80-20	2-7	1780	12.3	20-80
		Ave.	4520	31.1	80-20	Ave.	2030	14.0	15.75 1
		S.D.	90	0.7		S.D.	190	1.3	
6061 T6	NONE	M6ONF				M6ONF			
		1-1	5290	36.5	80-20	1-2	590	4.1	100-0
		1-3	5340	36.8	80-20	1-4	540	3.7	100-0
		1-5	5060	34.9	70-30	1-6	540	3.7	100-0
		2-2	5460	37.6	80-20	2-1	480	3.3	100-0
		2-4	4940	34.3	70-30	2-3	590	4.1	100-0
		2-6	5480	37.6	70-30	2-5	550	3.8	100-0
		Ave.	5260	36.2	75-25	Ave.	550	3.8	100-0
		S.D.	220	1.5		S.D.	40	0.3	
	BR127	M6OBF				M6OBF			
		1-1	5500	37.9	0-0-90-10	1-2	1150	7.9	10-90
		1-3	5310	36.6	0-0-80-20	1-4	1200	8.3	20-80
		1-5	5580	38.4	5-0-80-15	1-6	970	6.7	40-60
		2-2	4880	33.6	0-0-70-30	2-1	760	5.2	20-80
		2-4	5260	36.2	0-0-70-30	2-3	870	6.0	10-90
		2-6	5100	35.1	0-0-70-30	2-5	820	5.6	20-80
		Ave.	5270	36.3	0-0-75-25	Ave.	960	6.6	20-80
		S.D.	260	1.8		S.D.	180	1.2	
	XA3950	M6OMF				M6OMF			
		1-1	5490	37.8	5-0-70-25	1-2	2230	15.4	10-90
		1-3	5240	36.1	0-0-70-30	1-4	1750	12.1	10-90
		1-5	5590	38.5	5-0-70-25	1-6	1680	11.6	20-80
		2-2	5760	39.7	5-0-70-25	2-1	820	5.6	20-80
		2-4	5800	39.9	5-0-60-35	2-3	730	5.0	20-80
		2-6	5680	39.1	5-0-65-30	2-5	870	6.0	20-80
		Ave.	5590	38.5	5-0-70-25	Ave.	1350	9.3	15-85
		S.D.	210	1.4		S.D.	620	4.3	

NOTES: 1. Tested @ 200°F (93°C), after 14 days @ 200°F (93°C), 95-100% R.H.
2. See Figure 9, page 18.

APPENDIX VII

INDIVIDUAL SPECIMEN FLOATING ROLLER PEEL TEST DATA

The data presented here are for the tests and results discussed in Paragraphs 2.3.2 and 3.2.

INDIVIDUAL FLOATING ROLLER PEEL TEST RESULTS

FOR LR 100-172 ADHESIVE

Test Temp.		72°F (22°C) Dry				-65°F (-54°C) [1]			
Adher. Alloy	Primer	Spec. No.	Strength lbs/in. of width	Strength N/cm of width	Failure Mode [2]	Spec. No.	Strength lbs/in. of width	Strength N/cm of width	Failure Mode [2]
2024-T3	NONE	1-1	23.0	40.3	90-10	1-2	16.9	29.6	100-0
		1-3	26.3	46.1	90-10	1-4	17.9	31.3	100-0
		2-2	27.5	48.2	100-0	2-1	24.3	42.5	90-10
		2-4	25.5	44.7	100-0	2-3	23.4	41.0	100-0
		Ave.	25.5	44.8	95-5	Ave.	20.6	36.1	95-5
		S.D.	1.9	3.3		S.D.	3.8	6.6	
	BR127	1-2	3.5	6.1	0-0-100-0	1-1	6.2	10.9	0-0-100-0
		1-4	2.9	5.1	0-0-100-0	1-3	3.8	6.7	0-0-100-0
		2-1	4.1	7.2	0-0-100-0	2-2	3.3	5.8	0-0-100-0
		2-3	5.4	9.5	0-0-100-0	2-4	5.7	10.0	0-0-100-0
		Ave.	4.0	7.0	0-0-100-0	Ave.	4.7	8.4	0-0-100-0
		S.D.	1.1	1.9		S.D.	1.4	2.5	
6061-T6	NONE	1-1	14.2	24.9	100-0	1-2	15.3	26.8	90-10
		1-3	13.6	23.8	100-0	1-4	15.7	27.5	90-10
		2-2	8.0	14.0	100-0	2-1	13.2	23.1	90-10
		2-4	10.7	18.7	100-0	2-3	13.3	23.3	90-10
		Ave.	11.6	20.4	100-0	Ave.	14.4	25.2	90-10
		S.D.	2.8	5.0		S.D.	1.3	2.3	
	BR127	1-1	3.5	6.1	0-0-100-0	1-2	3.1	5.4	0-0-100-0
		1-3	7.1	12.4	100-0-0-0	1-4	2.9	5.1	0-0-100-0
		2-1	2.8	4.9	0-0-100-0	2-1	2.0	3.5	0-0-100-0
		2-4	3.9	6.8	0-0-100-0	2-3	4.1	7.2	0-0-100-0
		Ave.	4.4	7.6	25-0-75-0	Ave.	3.0	5.3	0-0-100-0
		S.D.	1.9	3.3		S.D.	0.9	1.5	
5052-H34	NONE	1-1	15.2	26.6	100-0	1-2	19.9	34.8	30-70
		1-3	17.0	29.8	100-0	1-4	17.8	31.2	30-70
		2-2	22.3	39.0	100-0	2-1	18.2	31.9	30-70
		2-4	20.0	35.0	100-0	2-3	17.9	31.3	30-70
		Ave.	18.6	32.6	100-0	Ave.	18.4	32.3	30-70
		S.D.	3.1	5.5		S.D.	1.0	1.7	
	BR127	1-1	3.1	5.4	0-0-100-0	1-2	3.2	5.6	0-0-100-0
		1-3	2.6	4.6	0-0-100-0	1-4	2.3	4.0	0-0-100-0
		2-2	3.5	6.1	0-0-100-0	2-1	3.7	6.5	0-0-100-0
		2-4	2.8	4.9	0-0-100-0	2-3	4.3	7.5	0-0-100-0
		Ave.	3.0	5.3	0-0-100-0	Ave.	3.4	5.9	0-0-100-0
		S.D.	0.4	0.7		S.D.	0.8	1.5	

NOTE: 1. Tested at -65°F (-54°C) after 10 minutes at -65°F (-54°C).
2. See Figure 9, page 18.

INDIVIDUAL FLOATING ROLLER PEEL RESULTS FOR R382-7 ADHESIVE
ON OPTIMIZED FPL ETCH ADHERENDS, PRIMED WITH BR127

Test Temp.	72°F (22°C) Dry				-65°F (-54°C)[1]			
Adherend Alloy	Spec. No.	Strength lbs/in. of width	Strength N/cm of width	Failure[2] Mode	Spec. No.	Strength lbs/in. of width	Strength N/cm of width	Failure[2] Mode
2024-T3	1-1	13.2	23.1	0-0-60-40	1-2	3.5	6.1	0-0-80-20
	1-3	15.1	26.4	0-0-60-40	1-4	3.8	6.7	0-0-80-20
	2-2	15.9	27.8	0-0-60-40	2-1	2.7	4.7	0-0-80-20
	2-4	17.2	30.1	0-0-50-50	2-3	4.1	7.2	0-0-80-20
	Ave.	15.4	26.9	0-0-60-40	Ave.	3.5	6.2	0-0-80-20
	S.D.	1.7	2.9		S.D.	0.6	1.1	
6061-T6	1-1	22.2	38.9	10-0-70-20	1-2	7.8	13.7	0-0-90-10
	1-3	23.4	41.0	10-0-70-20	1-4	5.5	9.6	0-0-90-10
	2-2	22.9	40.1	NOT AVAILABLE	2-1	7.7	13.5	0-0-90-10
	2-4	21.6	37.8	10-0-80-10	2-3	5.9	10.3	0-0-90-10
	Ave.	22.5	39.5	10-0-75-15	Ave.	6.7	11.8	0-0-90-10
	S.D.	0.8	1.4		S.D.	1.2	2.1	
5052-H34	1-1	26.5	46.4	10-0-50-40	1-2	19.5	34.1	0-0-60-40
	1-3	27.4	48.0	10-0-50-40	1-4	20.9	36.6	0-0-60-40
	2-2	21.4	37.5	10-10-50-30	2-1	19.8	34.7	10-10-50-30
	2-4	20.5	35.9	10-10-40-40	2-3	18.1	31.7	10-10-50-30
	Ave.	24.0	42.0	10-5-45-40	Ave.	19.6	34.3	5-5-55-35
	S.D.	3.5	6.1		S.D.	1.2	2.0	

INDIVIDUAL FLOATING ROLLER PEEL RESULTS FOR BA061NW ADHESIVE
ON OPTIMIZED FPL ETCH ADHERENDS, PRIMED WITH BR127

2024-T3	1-1	36.7	64.3	0-0-0-100	1-2	33.2	58.1	10-0-0-90
	1-3	39.1	68.5	0-0-0-100	1-4	32.9	57.6	10-0-0-90
	2-2	45.0	78.8	0-0-0-100	2-1	31.4	55.0	50-0-20-30
	2-4	42.4	74.2	0-0-0-100	2-3	36.9	64.6	50-0-20-30
	Ave.	40.8	71.5	0-0-0-100	Ave.	33.6	58.8	30-0-10-60
	S.D.	3.7	6.4		S.D.	2.4	4.1	
6061-T6	1-1	54.7	95.8	0-0-0-100	1-2	31.6	55.3	50-0-0-50
	1-3	53.2	93.2	0-0-0-100	1-4	33.1	58.0	60-0-0-40
	2-2	52.2	91.4	0-0-0-100	2-1	33.5	58.7	60-0-0-40
	2-4	47.8	83.7	0-0-0-100	2-3	24.3	42.5	80-0-0-20
	Ave.	52.0	91.0	0-0-0-100	Ave.	30.6	53.6	60-0-0-40
	S.D.	3.0	5.2		S.D.	4.3	7.6	
5052-H34	1-1	22.9	40.1	0-0-0-100	1-2	21.9	38.4	0-60-30-10
	1-3	33.1	58.0	0-0-0-100	1-4	24.1	42.2	10-50-30-10
	2-2	30.9	54.1	40-0-0-60	2-1	9.6	16.8	20-[illegible]-40-[illegible]
	2-4	30.8	53.9	20-0-0-80	2-3	14.7	25.7	0-50-40-10
	Ave.	29.4	51.5	15-0-0-85	Ave.	17.6	30.8	5-50-35-10
	S.D.	4.5	7.8		S.D.	6.7	11.7	

NOTE: 1. Tested at -65°F (-54°C) after 10 minutes at -65°F (-54°C).
2. **See Figure 9, page 18.**

INDIVIDUAL FLOATING ROLLER PEEL RESULTS FOR R 7114 ADHESIVE
ON OPTIMIZED FPL ETCH ADHEREND, PRIMED WITH BR127

Test Temp.	72°F (22°C) Dry				-65°F (-54°C)[1]			
Adherend Alloy	Spec. No.	Strength lbs/in. of width	Strength N/cm of width	Failure[2] Mode	Spec. No.	Strength lbs/in. of width	Strength N/cm of width	Failure[2] Mode
2024-T3	1-1	38.7	67.8	0-0-0-100	1-2	41.4	72.5	0-0-0-100
	1-3	41.4	72.5	0-0-0-100	1-4	19.3	33.8	10-0-40-50
	2-2	44.1	77.2	0-0-10-90	2-1	18.2	31.9	10-0-50-40
	2-4	41.9	73.4	0-0-0-100	2-3	18.1	31.7	10-0-40-50
	Ave.	41.5	72.7	0-0-5-95	Ave.	24.3	42.5	10-0-30-60
	S.D.	2.2	3.9		S.D.	11.4	20.0	
6061-T6	1-1	35.1	61.5	30-0-0-70	1-2	21.7	38.0	10-0-70-20
	1-3	36.0	63.0	10-0-0-90	1-4	20.0	35.0	0-0-70-30
	2-2	36.9	64.6	30-0-0-70	2-1	13.6	23.8	0-0-70-30
	2-4	40.6	71.1	30-0-0-70	2-3	15.0	26.3	0-0-70-30
	Ave.	37.2	65.1	25-0-0-75	Ave.	17.6	31.2	5-0-70-25
	S.D.	2.4	4.2		S.D.	3.9	3.2	
5052-H34	1-1	19.3	33.8	10-0-20-70	1-2	7.1	12.4	5-0-10-85
	1-3	20.3	35.5	40-20-20-20	1-4	11.0	19.3	0-0-40-60
	2-2	19.9	35.0	40-0-10-50	2-1	16.0	28.0	0-0-60-40
	2-4	20.3	35.5	20-0-0-80	2-3	6.5	11.4	10-0-50-40
	Ave.	19.7	34.4	30-5-10-55	Ave.	10.1	17.2	5-0-40-55
	S.D.	0.8	1.3		S.D.	4.4	6.1	

INDIVIDUAL FLOATING ROLLER PEEL RESULTS FOR AF-180 ADHESIVE
ON OPTIMIZED FPL ETCH ADHEREND, PRIMED WITH BR127

2024-T3	1-1	33.4	58.5	70-0-30-0	1-2	20.2	35.4	NOT AVAILABLE
	1-3	30.5	53.4	70-0-30-0	1-4	23.0	40.3	" "
	2-2	45.7	80.0	40-0-60-0	2-1	21.3	37.3	80-0-20-0
	2-4	45.4	79.5	50-0-50-0	2-3	22.3	39.0	90-0-10-0
	Ave.	38.7	67.3	60-0-40-0	Ave.	21.7	38.0	85-0-15-0
	S.D.	6.0	10.7		S.D.	1.2	2.1	
6061-T6	3-1	50.9	89.1	NOT AVAILABLE	3-2	24.0	42.0	90-0-10-0
	3-3	15.7	27.5	" "	3-4	24.4	42.7	80-0-20-0
	4-2	49.6	86.8	60-0-40-0	4-1	30.0	52.5	90-0-10-0
	4-4	53.2	93.2	60-0-40-0	4-3	26.6	46.6	90-0-10-0
	Ave.	42.2	74.2	60-0-40-0	Ave.	26.3	46.0	90-0-10-0
	S.D.	17.8	31.2		S.D.	2.8	4.8	
5052-H34	1-1	20.3	35.5	40-20-20-20	1-2	17.4	30.5	20-40-20-20
	1-3	18.8	32.9	0-0-0-100	1-4	18.9	33.1	30-30-10-30
	2-2	24.5	42.9	40-20-15-25	2-1	24.8	43.4	30-30-10-30
	2-4	21.7	38.0	40-20-30-10	2-3	23.1	40.4	40-20-15-25
	Ave.	21.3	37.3	30-15-15-40	Ave.	21.1	36.9	30-30-15-25
	S.D.	2.4	4.3		S.D.	3.5	6.1	

NOTE: 1. Tested at -65°F (-54°C) after 10 minutes at -65°F (-54°C).
2. See Figure 9, page 18.

INDIVIDUAL FLOATING ROLLER PEEL RESULTS FOR LR100-252 ADHESIVE
ON OPTIMIZED FPL ETCH ADHERENDS, PRIMED WITH BR127

Test Temp.	72°F (22°C) Dry				-65°F (-54°C)[1]			
Adherend Alloy	Spec. No.	Strength lbs/in. of width	Strength N/cm of width	Failure[2] Mode	Spec. No.	Strength lbs/in. of width	Strength N/cm of width	Failure[2] Mode
2024-T3	1-1	53.2	93.2	10-0-0-90	1-2	15.1	26.4	80-0-20-0
	1-3	49.6	86.8	10-0-0-90	1-4	13.8	24.2	80-0-20-0
	2-2	43.3	75.8	50-0-10-40	2-1	10.1	17.5	80-0-20-0
	2-4	33.6	58.8	50-0-0-50	2-3	8.0	14.0	90-0-10-0
	Ave.	44.9	78.7	30-0-5-65	Ave.	11.6	20.5	80-0-20-0
	S.D.	8.6	15.1		S.D.	3.3	5.8	
6061-T6	1-1	28.8	50.4	90-0-0-10	1-2	7.7	13.5	100-0-0-0
	1-3	27.1	47.5	100-0-0-0	1-4	8.8	15.4	100-0-0-0
	2-2	28.3	49.6	100-0-0-0	2-1	6.9	12.1	100-0-0-0
	2-4	35.0	61.3	100-0-0-0	2-3	8.2	14.4	90-0-0-10
	Ave.	29.8	52.2	95-0-0-5	Ave.	7.9	13.9	95-0-0-5
	S.D	3.5	6.2		S.D	0.8	1.4	
5052-H34	1-1	40.1	70.2	0-0-80-20	1-2	22.7	39.7	0-100-0-0
	1-3	37.1	65.0	0-0-90-10	1-4	22.3	39.0	0-100-0-0
	2-2	37.9	66.4	0-0-90-10	2-1	20.3	35.5	0-100-0-0
	2-4	50.6	88.6	0-0-0-100	2-3	21.6	37.8	0-100-0-0
	Ave.	41.4	73.0	0-0-65-35	Ave.	21.7	38.0	0-100-0-0
	S.D.	6.2	5.9		S.D.	1.1	1.8	

INDIVIDUAL FLOATING ROLLER PEEL RESULTS FOR HA-429 ADHESIVE
ON OPTIMIZED FPL ETCH ADHERENDS, PRIMED WITH BR127

2024-T3	1-1	12.1	21.2	0-0-90-10	1-2	3.6	6.3	0-0-90-10
	1-3	9.5	16.6	0-0-90-10	1-4	4.9	8.6	0-0-90-10
	2-2	11.6	20.3	0-0-90-10	2-1	2.7	4.7	0-0-90-10
	2-4	27.8	48.7	0-0-70-30	2-3	3.2	5.6	50-0-50-0
	Ave.	15.3	27.1	0-0-85-15	Ave.	3.5	6.1	25-0-70-5
	S.D	8.5	13.7		S.D.	1.0	1.7	
6061-T6	1-1	20.4	35.7	60-0-40-0	1-2	7.0	12.3	80-0-10-0
	1-3	26.2	45.9	60-0-40-0	1-4	6.6	11.6	90-0-10-0
	2-2	23.7	41.5	60-0-40-0	2-1	6.6	11.6	90-0-10-0
	2-4	25.8	45.2	60-0-40-0	2-3	6.7	11.7	90-0-10-0
	Ave.	24.0	42.1	60-0-40-0	Ave.	6.7	11.8	90-0-10-0
	S.D.	2.6	4.7		S.D.	0.2	0.3	
5052-H34	1-1	19.0	33.3	0-0-80-20	1-2	11.7	20.5	0-0-90-10
	1-3	19.6	34.3	0-0-80-20	1-4	16.7	29.2	0-0-90-10
	2-2	19.3	33.8	0-0-80-20	2-1	13.3	23.3	0-0-90-10
	2-4	24.1	42.2	0-0-70-30	2-3	17.1	29.9	5-5-85-5
	Ave.	20.5	35.9	0-0-80-20	Ave.	14.6	25.6	0-0-90-10
	S.D.	2.4	4.2		S.D.	2.7	4.7	

NOTE: 1. Tested at -65°F (-54°C) after 10 minutes at -65°F (-54°C).
2. See Figure 9, page 10.

APPENDIX VIII

INDIVIDUAL SPECIMEN STRESS DURABILITY TEST DATA

The data presented here are for the tests discussed in Paragraphs 2.3.3 and 3.3.

INDIVIDUAL LAP SHEAR CONTROL AND STRESS DURABILITY
TEST RESULTS FOR EA150-172 ADHESIVE AND NO PRIMER

Lap Shear Control Test Results								
Test Temp.	72°F (22°C) Dry				140°F (60°C) Dry			
Adherend Alloy[1]	Spec. No.	Strength psi	Strength MPa	Failure Mode[2]	Spec. No.	Strength psi	Strength MPa	Failure Mode[2]
5052-H34	1-3	4340	29.9	80-20	1-6	3730	25.7	40-60
	2-3	3230	22.3	80-20	2-2	3710	25.6	60-40
	3-3	3920	27.0	80-20	3-7	3790	26.1	40-60
	Ave.	3830	26.4	80-20	Ave.	3740	25.8	45-55
	S.D.	560	3.9		S.D.	40	0.3	
6061-T6	1-7	4330	29.8	70-30	1-5	4060	28.0	100-0
	2-1	5200	35.9	0-100	2-2	4650	32.0	10-90
	3-1	4320	29.8	0-100	3-3	4030	27.8	0-100
	Ave.	4620	31.8	25-75	Ave.	4250	29.3	30-70
	S.D.	510	3.5		S.D.	350	2.4	

STRESS DURABILITY TEST RESULTS[3]

Nominal Stress Level[4]	40% Stress							60% Stress				
Adherend Alloy[1]	Spec. No.	Exposure Stress psi	Exposure Stress MPa	Ave. Hours to Failure	Residual Stress psi	Residual Stress MPa	Failure Mode[2]	Spec. No.	Exposure Stress psi	Exposure Stress MPa	Ave. Hours to Failure	Failure Mode[2]
5052-H34	1-6	1800	12.3	752	----	----	100-0	1-1	2250	15.5	448.5	100-0
	1-7	↓	↓	752	↓	↓	100-0	1-5	↓	↓	1.75	100-0
	2-1			752			100-0	2-4			1.75	100-0
	2-5			752			100-0	2-7			1.75	100-0
	3-[illegible]			752			100-0	3-4			1.75	100-0
	Ave.			752			100-0	Ave.			91.1	100-0
	S.D.			0				S.D.			200	
6061-T6	1-2	1700	11.7	8.5	----	----	100-0	1-6	2550	17.6	8	100-0
	1-4	↓	↓	8.5	↓	↓	100-0	2-3	↓	↓	8	100-0
	2-5			8.5			100-0	2-6			8	100-0
	2-7			63			100-0	3-2			8	100-0
	3-6			8.5			100-0	3-5			8	100-0
	Ave.			23			100-0	Ave.			8	100-0
	S.D.			33				S.D.			0	

1. All specimens prepared with an OPTL etched surface.
2. See Figure 9, page 19.
3. Specimens exposed to 140°F(60°C) and 95-100% R.H. while under stress.
4. Based on baseline ultimate strength of dry unaged specimens tested at 140°F(60°C).

INDIVIDUAL LAP SHEAR CONTROL AND STRESS DURABILITY
TEST RESULTS FOR LR100-172 ADHESIVE AND BR127 PRIMER

Lap Shear Control Test Results								
Test Temp.	72°F (22°C) Dry				140°F (60°C) Dry			
Adherend Alloy[1]	Spec. No.	Strength psi	Strength MPa	Failure Mode[2]	Spec. No.	Strength psi	Strength MPa	Failure Mode[2]
5052-H34	4-1	4070	28.0	5-0-95-0	4-5	4290	29.6	95-0-5-0
	5-5	4240	29.2	50-0-50-0	5-6	4140	28.5	60-0-40-0
	6-6	3540	24.4	60-0-40-0	6-1	4340	29.9	5-0-95-0
	Ave.	3950	27.2	40-0-60-0	Ave.	4257	29.3	55-0-45-0
	S.D.	365	2.5		S.D.	104	0.7	
6061-T6	1-7	5760	39.7	50-0-50-0	1-2	5240	36.1	10-0-90-0
	2-6	5640	38.9	60-0-40-0	2-3	5160	35.6	30-0-70-0
	3-2	5880	40.5	60-0-40-0	3-5	5400	37.2	20-0-80-0
	Ave.	5760	39.7	55-0-45-0	Ave.	5270	36.3	20-0-80-0
	S.D.	120	0.8		S.D.	120	0.8	

STRESS DURABILITY TEST RESULTS[3]

Nominal Stress Level[4]	40% Stress							60% Stress				
Adherend Alloy[1]	Spec. No.	Exposure Stress psi	Exposure Stress MPa	Ave. Hours to Failure	Residual Stress psi	Residual Stress MPa	Failure Mode[2]	Spec. No.	Exposure Stress psi	Exposure Stress MPa	Ave. Hours to Failure	Failure Mode[2]
5052-H34	4-3	1700	11.7	1000+	3990	27.5	0-0-100-0	4-2	2550	17.6	34	40-0-60-0
	4-6	↓	↓	87	----	----	100-0-0-0	4-4	↓	↓	34	20-0-80-0
	5-2			326	----	----	100-0-0-0	5-1			34	30-0-70-0
	5-4			857	----	----	80-0-20-0	6-4			34	10-0-90-0
	6-5			566	----	----	70-0-30-0	6-7			34	40-0-60-0
	Ave.			567	3990	27.5	70-0-30-0	Ave.			34	30-0-70-0
	S.D.			374				S.D.			0	
6061-T6	1-3	2190	15.0	1000+	4430	30.5	60-0-40-0	1-4	3220	22.2		50-0-50-0
	1-6	↓	↓	1000+	4410	30.4	90-0-10-0	2-1	↓	↓	41.5	40-0-60-0
	2-7			807	----	----	60-0-40-0	2-5			29.5	20-0-80-0
	3-1			1000+	4430	30.5	70-0-30-0	3-3			135.5	60-0-40-0
	3-4			1000+	5200	35.8	90-0-10-0	3-6			161	60-0-40-0
	Ave.			961+	4620	31.8	75-0-25-0	Ave.			104	45-0-55-0
	S.D.			86.3	390	2.7		S.D.			80	

1. All specimens prepared with an OFPL etched surface.
2. See Figure 9, page 18.
3. Specimens exposed to 140°F(60°C) and 95-100% R.H. while under stress.
4. Based on baseline ultimate strength of dry unaged specimens tested at 140°F(60°C).

INDIVIDUAL LAP SHEAR CONTROL AND STRESS DURABILITY
TEST RESULTS FOR R7114 ADHESIVE AND BR127 PRIMER

Lap Shear Control Test Results								
Test Temp.	72°F (22°C) Dry				140°F (60°C) Dry			
Adherend Alloy[1]	Spec. No.	Strength psi	Strength MPa	Failure Mode[2]	Spec. No.	Strength psi	Strength MPa	Failure Mode[2]
5052-H34	1-6	4390	30.2	0-0-0-100	1-3	3650	25.1	0-0-0-100
	2-7	4370	30.1	0-0-10-90	2-1	3660	25.2	0-0-0-100
	3-2	4360	30.0	0-0-10-90	3-6	3580	24.7	0-0-0-100
	Ave.	4370	30.1	0-0-5-95	Ave.	3630	25.0	[illegible]
	S.D.	20	0.1		S.D.	40	0.3	
6061-T6	1-2	5060	34.9	0-0-40-60	1-4	4770	32.9	0-0-0-100
	2-7	4200	28.9	0-0-30-70	2-5	4730	32.6	0-0-0-100
	3-5	5640	38.9	70-0-10-20	3-3	5060	34.9	0-0-0-100
	Ave.	4970	34.2	25-0-25-50	Ave.	4850	33.4	0-0-0-100
	S.D.	730	5.0		S.D.	180	1.2	

STRESS DURABILITY TEST RESULTS[3]

Nominal Stress Level[4]	40% Stress							60% Stress				
Adherend Alloy[1]	Spec. No.	Exposure Stress psi	Exposure Stress MPa	Ave. Hours to Failure	Residual Stress psi	Residual Stress MPa	Failure Mode[2]	Spec. No.	Exposure Stress psi	Exposure Stress MPa	Ave. Hours to Failure	Failure Mode[2]
5052-H34	1-1	1450	10.0	34	----	----	0-0-0-100	1-2	2130	15.0	25.5	0-0-0-100
	2-3	↓	↓	34	↓	↓	0-0-0-100	2-2	↓	↓	14	0-0-0-100
	2-6	↓	↓	34	↓	↓	0-0-0-100	2-5	↓	↓	14	0-0-0-100
	3-3	↓	↓	34	↓	↓	0-0-0-100	3-1	↓	↓	36.5	0-0-0-100
	3-7	↓	↓	34	↓	↓	0-0-0-100	3-4	↓	↓	36.5	0-0-0-100
	Ave.			34			0-0-0-100	Ave.			25.3	0-0-0-100
	S.D.			0				S.D.			11.3	
6061-T6	1-3	1940	13.4	361	----	----	10-0-0-90	4-3	2910	20.1	9.5	10-0-0-90
	1-6	↓	↓	444.5	↓	↓	10-0-0-90	4-5	↓	↓	9.5	10-0-0-90
	2-4	↓	↓	326	↓	↓	10-0-0-90	4-7	↓	↓	9.5	0-0-0-100
	2-6	↓	↓	193	↓	↓	0-0-0-100	5-2	↓	↓	9.5	20-0-0-80
	3-6	↓	↓	374	↓	↓	0-0-0-100	5-7	↓	↓	9.5	10-0-0-90
	Ave.			339.7			5-0-0-95	Ave.			9.5	10-0-0-90
	S.D.			92.6				S.D.			0	

1. All specimens prepared with an OFPL etched surface.
2. See Figure 9, page 18.
3. Specimens exposed to 140°F(60°C) and 95-100% R.H. while under stress.
4. Based on baseline ultimate strength of dry unaged specimens tested at 140°F(60°C).

INDIVIDUAL LAP SHEAR CONTROL AND STRESS DURABILITY
TEST RESULTS FOR XA-136 ADHESIVE AND BR127 PRIMER

Lap Shear Control Test Results								
Test Temp.	72°F (22°C) Dry				140°F (60°C) Dry			
Adherend Alloy[1]	Spec. No.	Strength psi	Strength MPa	Failure Mode[2]	Spec. No.	Strength psi	Strength MPa	Failure Mode[2]
5052-H34	1-4	2360	19.7	0-0-0-100	1-6	2470	17.0	100-0-0-0
	2-3	3320	22.9	0-0-0-100	2-5	3110	21.4	100-0-0-0
	3-2	3360	23.2	0-0-0-100	3-5	3300	22.7	100-0-0-0
	Ave.	3130	21.6	0-0-0-100	Ave.	2960	20.4	100-0-0-0
	S.D.	280	1.9		S.D.	440	3.0	
6061-T6	1-7	4950	34.1	0-0-0-100	1-2	3800	26.5	0-0-0-100
	2-6	4900	33.8	0-0-0-100	2-3	4530	31.2	0-0-0-100
	3-3	4950	34.1	0-0-0-100	3-1	4040	27.8	0-0-0-100
	Ave.	4930	34.0	0-0-0-100	Ave.	4140	28.5	0-0-0-100
	S.D.	30	0.2		S.D.	350	2.4	

STRESS DURABILITY TEST RESULTS[3]

Nominal Stress Level[4]	40% Stress							60% Stress				
Adherend Alloy[1]	Spec. No.	Exposure Stress psi	Exposure Stress MPa	Ave. Hours to Failure	Residual Stress psi	Residual Stress MPa	Failure Mode[2]	Spec. No.	Exposure Stress psi	Exposure Stress MPa	Ave. Hours to Failure	Failure Mode[2]
5052-H34	1-2	1180	8.1	699	----	----	10-0-0-90	1-1	1780	12.2	5	0-0-0-100
	1-7	↓	↓	734	↓	↓	0-0-0-100	1-5	↓	↓	5	0-0-0-100
	2-4			734			0-0-0-100	2-2			36	10-0-0-90
	3-1			734			10-0-0-90	3-3			633.5	10-0-0-90
	3-4			734			0-0-0-100	3-6			866	40-0-0-60
	Ave.			727			1-0-0-99	Ave.			310	15-0-0-85
	S.D.			22				S.D.			411	
6061-T6	1-4	1660	11.4	1000+	3914	27.0	10-0-0-90	1-1	2480	17.1	8.3	0-0-0-100
	2-1	↓	↓	1000+	3365	23.2	10-0-0-90	1-6	↓	↓	44	10-0-0-90
	2-4			1000+	3945	27.0	10-0-0-90	3-2			152	30-0-0-70
	2-7			1000+	3713	25.6	10-0-0-90	3-6			103.5	30-0-0-70
	3-5			1000+	3851	26.5	10-0-0-90	3-7			103.5	20-0-0-80
	Ave.			1000+	3700	25.5	10-0-0-90	Ave.			80	20-0-0-80
	S.D.			0	250	1.7		S.D.			60	

1. All specimens prepared with an OFPL etched surface.
2. See Figure 9, page 18.
3. Specimens exposed to 140°F(60°C) and 95-100% R.H. while under stress.
4. Based on baseline ultimate strength of dry unaged specimens tested at 140°F(60°C).

INDIVIDUAL LAP SHEAR CONTROL AND STRESS DURABILITY
TEST RESULTS FOR LR100-252 ADHESIVE AND BR127 PRIMER

Lap Shear Control Test Results								
Test Temp.	72°F (22°C) Dry				140°F (60°C) Dry			
Adherend Alloy[1]	Spec. No.	Strength psi	Strength MPa	Failure Mode[2]	Spec. No.	Strength psi	Strength MPa	Failure Mode[2]
5052-H34	1-6	3780	28.8	10-0-30-60	1-4	3680	25.4	5-0-10-85
	2-2	4520	31.2	0-0-30-70	2-7	4350	30.0	0-0-5-95
	3-5	4260	29.4	0-0-0-100	3-1	4060	28.0	0-0-0-100
	Ave.	4190	28.9	5-0-20-75	Ave.	4030	27.8	0-0-5-95
	S.D.	380	1.2		S.D.	340	2.3	
6061-T6	1-2	5040	34.7	40-0-0-60	1-6	5070	34.9	20-0-0-80
	2-4	5320	36.7	70-0-0-30	2-1	5120	35.3	30-0-0-70
	3-7	4900	33.8	30-0-0-70	3-4	5010	34.5	20-0-0-80
	Ave.	5090	35.1	45-0-0-55	Ave.	5070	34.9	20-0-0-80
	S.D.	210	1.4		S.D.	60	0.4	

STRESS DURABILITY TEST RESULTS[3]

Nominal Stress Level[4]	40% Stress							60% Stress				
Adherend Alloy[1]	Spec. No.	Exposure Stress psi	Exposure Stress MPa	Ave. Hours to Failure	Residual Stress psi	Residual Stress MPa	Failure Mode[2]	Spec. No.	Exposure Stress psi	Exposure Stress MPa	Ave. Hours to Failure	Failure Mode[2]
5052-H34	1-1	1610	11.1	566	----	----	20-0-0-80	1-2	2420	16.7	900	20-0-20-60
	1-5	↓	↓	566	↓	↓	30-0-0-70	1-7	↓	↓	866	30-0-20-50
	2-4	↓	↓	566	↓	↓	20-0-0-80	2-1	↓	↓	901.5	30-0-20-50
	3-2	↓	↓	566	↓	↓	10-0-0-90	3-3	↓	↓	866	10-0-10-80
	3-7	↓	↓	566	↓	↓	10-0-0-90	3-6	↓	↓	866	20-0-10-70
	Ave.			566			20-0-0-80	Ave.			880	20-0-15-65
	S.D.			0				S.D.			20	
6061-T6	1-5	2030	14.0	1000+	3350	23.1	40-0-30-30	1-1	3040	20.9	2	40-0-0-60
	2-6	↓	↓	↓	4090	28.2	30-0-30-40	1-7	↓	↓	131	50-0-0-50
	2-7	↓	↓	↓	3980	27.4	20-0-30-50	2-3	↓	↓	58	30-0-10-60
	3-2	↓	↓	↓	3850	26.5	10-0-30-60	3-3	↓	↓	334	50-0-20-30
	3-6	↓	↓	↓	4630	31.9	10-0-40-50	3-5	↓	↓	443	40-0-20-40
	Ave.			1000+	3980	27.4	20-0-30-50	Ave.			170	40-0-10-50
	S.D.			0	460	3.2		S.D.			200	
5052-H34	2-5	1610	11.1	736[1]	---	---	20-0-10-70	2-3	2420	16.7	396	40-0-30-30
	3-4	1610	11.1	736[1]	---	---	10-0-30-60	2-6	2400	16.5	184	40-0-10-50
	Ave.			736			15-0-20-65	Ave.			290	40-0-20-40

1. All specimens prepared with an OFPL etched surface.
2. See Figure 9, page 18.
3. Specimens exposed to 140°F(60°C) and 95-100% R.H. while under stress.
4. Based on baseline ultimate strength of dry unaged specimens tested at 140°F(60°C).

INDIVIDUAL LAP SHEAR CONTROL AND STRESS DURABILITY
TEST RESULTS FOR MA 429 ADHESIVE AND BR127 PRIMER

Lap Shear Control Test Results								
Test Temp.	72°F (22°C) Dry				140°F (60°C) Dry			
Adherend Alloy[1]	Spec. No.	Strength psi	Strength MPa	Failure Mode[2]	Spec. No.	Strength psi	Strength MPa	Failure Mode[2]
5052-H34	1-4	4920	33.9	0-0-100-0	1-6	4880	33.6	0-0-100-0
	2-2	4710	32.5	0-0-100-0	2-4	4840	33.3	0-0-100-0
	3-6	4750	25.8	0-0-100-0	3-3	4710	32.5	0-0-100-0
	Ave.	4790	33.0	0-0-100-0	Ave.	4810	33.1	0-0-100-0
	S.D.	110	0.8		S.D.	90	0.6	
6061-T6	1-2	5410	37.3	0-0-80-20	1-5	5430	37.4	0-0-80-20
	2-1	5460	37.6	0-0-80-20	2-6	5320	36.6	0-0-80-20
	3-4	5700	34.5	0-0-80-20	3-6	5560	38.3	0-0-80-20
	Ave.	5520	38.0	0-0-80-20	Ave.	5440	37.5	0-0-80-20
	S.D.	160	1.1		S.D.	120	0.8	

STRESS DURABILITY TEST RESULTS[3]

Nominal Stress Level[4]	40% Stress							60% Stress				
Adherend Alloy[1]	Spec. No.	Exposure Stress psi	Exposure Stress MPa	Ave. Hours to Failure	Residual Stress psi	Residual Stress MPa	Failure Mode[2]	Spec. No.	Exposure Stress psi	Exposure Stress MPa	Ave. Hours to Failure	Failure Mode[2]
5052-H34	1-3	1920	13.2	1000+	3450	23.8	0-0-80-20	1-2	2890	19.9	722	20-0-60-20
	2-1	↓	↓	857	----	----	10-0-20-70	1-5	↓	↓	722	20-0-50-30
	2-5	↓	↓	857	----	----	10-0-10-80	2-3	↓	↓	757	0-0-20-80
	3-2	↓	↓	1000+	4110	28.3	10-0-80-10	3-1	↓	↓	722	20-0-60-20
	3-5	↓	↓	1000+	3440	23.7	10-0-80-10	3-4	↓	↓	757	10-0-20-70
	Ave.			943	3670	25.3	10-0-55-35	Ave.			736	15-0-40-45
	S.D.			76	380	2.6		S.D.			19	
6061-T6	1-6	2170	15.0	1000+	4480	30.9	10-0-40-50	1-7	3260	22.5	141.5	20-0-60-20
	2-3	↓	↓	↓	4380	30.2	10-0-50-40	2-2	↓	↓	16	30-0-50-20
	2-5	↓	↓	↓	4050	27.9	20-0-50-30	2-7	↓	↓	288	40-0-50-10
	3-3	↓	↓	↓	4220	29.0	10-0-60-30	3-2	↓	↓	16	20-0-70-10
	3-5	↓	↓	↓	4480	30.9	10-0-80-10	3-7	↓	↓	63.5	20-0-60-20
	Ave.			1000+	4320	29.8	10-0-55-35	Ave.			105	25-0-60-15
	S.D.			0	190	1.3		S.D.			114	

1. All specimens prepared with an OFPL etched surface.
2. See Figure 9, page 18.
3. Specimens exposed to 140°F(60°C) and 95-100% R.H. while under stress.
4. Based on baseline ultimate strength of dry unaged specimens tested at 140°F(60°C).

INDIVIDUAL LAP SHEAR CONTROL AND STRESS DURABILITY
TEST RESULTS FOR R382-7 ADHESIVE AND BR127 PRIMER

Lap Shear Control Test Results								
Test Temp.	72°F (22°C) Dry				140°F (60°C) Dry			
Adherend Alloy[1]	Spec. No.	Strength psi	Strength MPa	Failure Mode[2]	Spec. No.	Strength psi	Strength MPa	Failure Mode[2]
5052-H34	1-2	4310	29.7	0-0-50-50	1-7	4330	29.8	0-0-70-30
	2-6	3[illegible]	26.4	0-0-90-10	2-3	3940	27.1	0-0-90-10
	3-3	3[illegible]	24.8	0-0-70-30	3-5	3710	25.6	0-0-90-10
	Ave.	3910	27.0	0-0-70-30	Ave.	3990	27.5	0-0-85-15
	S.D.	360	2.5		S.D.	310	2.2	
6061-T6	1-3	4430	30.5	0-0-0-100	1-4	4520	31.1	0-0-0-100
	2-2	3760	25.9	0-0-0-100	2-1	4560	31.4	0-0-0-100
	3-6	4300	29.6	0-0-0-100	3-2	4810	33.1	0-0-0-100
	Ave.	4160	28.7	0-0-0-100	Ave.	4630	31.9	0-0-0-100
	S.D.	360	2.4		S.D.	160	1.1	

STRESS DURABILITY TEST RESULTS[3]

Nominal Stress Level[4]	40% Stress							60% Stress				
Adherend Alloy[1]	Spec. No.	Exposure Stress psi	Exposure Stress MPa	Ave. Hours to Failure	Residual Stress psi	Residual Stress MPa	Failure Mode[2]	Spec. No.	Exposure Stress psi	Exposure Stress MPa	Ave. Hours to Failure	Failure Mode[2]
5052-H34	1-1	1590	11.0	957	----	----	0-0-0-100	1-3	2400	16.5	84	10-0-0-90
	1-5	↓	↓	183.5	↓	↓	0-0-0-100	1-6	↓	↓	95	0-0-0-100
	2-5	↓	↓	183.5	↓	↓	0-0-0-100	2-2	↓	↓	110	10-0-0-90
	2-7	↓	↓	415	↓	↓	0-0-0-100	2-4	↓	↓	110	0-0-0-100
	3-4	↓	↓	415	↓	↓	0-0-0-100	3-7	↓	↓	131.5	0-0-0-100
	Ave.			410			0-0-0-100	Ave.			106	5-0-0-95
	S.D.			275				S.D.			18	
6061-T6	1-5	1850	12.7	112	----	----	30-0-0-70	1-2	2780	19.1	3.75	10-0-0-90
	2-4	↓	↓	409	↓	↓	10-0-0-90	1-7	↓	↓	3.75	10-0-0-90
	2-7	↓	↓	279	↓	↓	10-0-0-90	2-5	↓	↓	3.75	10-0-0-90
	3-3	↓	↓	327	↓	↓	10-0-0-90	2-6	↓	↓	3.75	10-0-0-90
	3-5	↓	↓	378	↓	↓	10-0-0-90	3-7	↓	↓	3.75	10-0-0-90
	Ave.			301			15-0-0-85	Ave.			3.75	10-0-0-90
	S.D.			117				S.D.			0	

1. All specimens prepared with an OFPL etched surface.
2. See Figure 9, page 18.
3. Specimens exposed to 140°F(60°C) and 95-100% R.H. while under stress.
4. Based on baseline ultimate strength of dry unaged specimens tested at 140°F(60°C).

INDIVIDUAL LAP SHEAR CONTROL AND STRESS DURABILITY
TEST RESULTS FOR EA9601NW ADHESIVE AND BR127 PRIMER

Lap Shear Control Test Results								
Test Temp.	72°F (22°C) Dry				140°F (60°C) Dry			
Adherend Alloy[1]	Spec. No.	Strength psi	Strength MPa	Failure Mode[2]	Spec. No.	Strength psi	Strength MPa	Failure Mode[2]
5052-H34	1-4	4980	34.3	40-0-0-60	1-7	4820	33.2	20-0-0-80
	2-3	4940	34.0	60-0-0-40	2-6	4200	28.9	20-0-0-80
	3-1	4760	37.8	10-0-0-90	3-7	4390	30.2	10-0-0-90
	Ave.	4890	33.7	35-0-0-65	Ave.	4470	30.8	15-0-0-85
	S.D.	110	0.8		S.D.	320	2.2	
6061-T6	1-6	5570	38.4	0-0-10-90	1-1	5250	36.2	70-0-0-30
	2-2	5050	34.8	100-0-0-0	2-7	4880	33.6	0-0-0-100
	3-4	5410	37.3	90-0-0-10	3-3	5310	36.6	0-0-20-80
	Ave.	5340	36.8	65-0-0-35	Ave.	5150	35.5	15-0-0-35
	S.D.	270	1.8		S.D.	230	1.6	

STRESS DURABILITY TEST RESULTS[3]

Nominal Stress Level[4]	40% Stress							60% Stress				
Adherend Alloy[1]	Spec. No.	Exposure Stress psi	Exposure Stress MPa	Ave. Hours to Failure	Residual Stress psi	Residual Stress MPa	Failure Mode[2]	Spec. No.	Exposure Stress psi	Exposure Stress MPa	Ave. Hours to Failure	Failure Mode[2]
5052-H34	1-3	1790	12.3	183.5	----	----	0-0-0-100	1-2	2680	18.5	497	20-0-0-80
	1-6	↓	↓	230	↓	↓	10-0-0-90	1-5	↓	↓	741	10-0-0-90
	2-1	↓	↓	280	↓	↓	10-0-0-90	2-2	↓	↓	866	30-0-0-70
	2-5	↓	↓	280	↓	↓	10-0-0-90	2-4	↓	↓	781	10-0-0-90
	3-2	↓	↓	280	↓	↓	10-0-0-90	1-1	↓	↓	781	10-0-0-90
	Ave.			250			10-0-0-90	Ave.			733.2	15-0-0-85
	S.D.			43				S.D.			140	
6061-T6	1-2	2060	14.2	1000+	4030	27.8	10-0-50-40	1-7	3090	21.2	256	30-0-0-70
	1-5	↓	↓	1000+	5070	34.9	10-0-60-30	2-1	↓	↓	208	40-0-0-60
	2-3	↓	↓	448	----	----	50-0-10-40	2-5	↓	↓	648	30-0-0-70
	3-5	↓	↓	803	----	----	50-0-10-40	3-2	↓	↓	160.5	30-0-0-70
	3-7	↓	↓	1000+	4310	29.7	20-0-0-80	3-6	↓	↓	256	40-0-0-60
	Ave.			850+	4470	30.8	30-0-25-45	Ave.			305	35-0-0-65
	S.D.			240	540	3.7		S.D.			195	
5052-H34	3-3	1790	12.3	736[1]	---	---	30-0-10-60	2-7	2680	18.5	553	30-0-10-60
	3-5	1790	12.3	736[1]	---	---	20-0-10-70	3-4	2680	18.5	542	30-0-10-60
	Ave.			736			25-0-10-65	Ave.			547.5	30-0-10-60

1. All specimens prepared with an OFPL etched surface.
2. See Figure 9, page 18.
3. Specimens exposed to 140°F(60°C) and 95-100% R.H. while under stress.
4. Based on baseline ultimate strength of dry unaged specimens tested at 140°F(60°C).

APPENDIX IX

INDIVIDUAL SPECIMEN DCB CRACK GROWTH TEST DATA

The data presented here are for the tests and results discussed in Paragraphs 2.3.4 and 3.4.

INDIVIDUAL DCB CRACK GROWTH TEST RESULTS

FM-73 ADHESIVE/BR127 PRIMER

Exposure Time[1] (Hours)				G_I $\left(\frac{in.\ lb}{in^2}\right)$							
				0	1	24	168	336	504	672	Failure[3] Mode
Adherend Alloy	Sweetener[4]	Rinse	Spec. No.								
2024-T3	2024	Deion-ized	1-1	11.93	11.93	9.16	7.57	7.03	6.25	5.72	[illegible]
			1-2	19.46	19.46	12.98	10.12	8.73	8.01	7.29	[illegible]
			1-3	15.33	13.58	13.02	10.57	10.57	1[illegible].57	9.34	[illegible]
			1-4	24.52	19.46	16.36	13.79	13.27	13.27	12.18	[illegible]
			1-5	18.52	14.75	11.53	10.84	9.42	9.42	9.43	[illegible]
			Ave.	17.95	15.84	12.61	10.56	9.80	9.50	8.55	[illegible]
			S.D.	4.71	3.45	2.62	2.18	2.32	2.[illegible]	2.4[illegible]	
2024-T3	2024	Tap	2-1	14.66	21.74	11.89	8.68	7.32	6.[illegible]	6.27	[illegible]
			2-2	20.62	17.30	14.15	11.10	9.45	9.45	7.7[illegible]	[illegible]
			2-3	24.77	17.70	9.08	6.43	5.68	5.00	4.41	[illegible]
			2-4	19.71	14.66	11.36	8.85	8.68	7.67	7.80	[illegible]
			2-5	16.57	13.44	7.60	5.69	5.27	5.05	4.34	100-0-0-0
			Ave.	19.27	15.17	10.81	8.15	7.28	6.73	6.02	70-0-0-30
			S.D.	3.90	2.24	2.54	2.15	1.82	1.88	1.46	
5052-H34	2024	Tap	4-1	32.13	29.30	23.60	23.60	22.47	19.82	18.35	[illegible]
			4-2	27.40	25.12	16.35	17.12	14.80	14.80	14.80	[illegible]
			4-3	34.54	25.25	22.58	22.58	22.58	20.30	20.30	[illegible]
			4-4	28.76	22.09	20.56	18.27	18.27	18.27	17.00	[illegible]
			4-5	26.96	10.31	8.72	7.09	7.09	6.55	5.08	80-0-0-20
			Ave.	29.97	22.41	18.76	17.73	17.04	16.02	15.16	15-0-0-85
			S.D.	3.25	7.24	5.96	6.35	6.44	5.72	6.00	
5052-H34	5052	Tap	9-1	3.09	0	0	0	0	0	0	100-0-0-0
			9-2	2.35	0	0	0	0	0	0	100-0-0-0
			9-3	3.58	0	0	0	0	0	0	100-0-0-0
			9-4	4.51	0.13	0.13	0.13	0.13	0.13	0.13	100-0-0-0
			9-5	4.13	0.12	0.12	0.12	0.12	0.12	0.12	100-0-0-0
			10-1	0.34	0	0	0	0	0	0	100-0-0-0
			10-2	4.26	0.33	0.33	0.33	0.33	0.33	0.33	100-0-0-0
			10-3	4.19	0.14	0.14	0.14	0.14	0.14	0.14	100-0-0-0
			10-4	5.15	0.37	0.37	0.37	0.37	0.37	0.37	100-0-0-0
			10-5	3.11	0	0	0	0	0		100-0-0-0
			Ave.	3.30	0.12	0.11	0.11	0.11	0.11	0.11	100-0-0-0
			S.D.	1.10	0.14	0.14	0.14	0.14	0.14	0.14	
6061-T6	2024	Tap	6-1	18.73	12.29	11.78	9.81	9.81	8.07	8.07	[illegible]
			6-2	15.30	13.13	11.69	10.77	9.09	8.82	8.82	[illegible]
			6-3	18.30	15.43	12.68	10.01	10.01	8.25	8.25	[illegible]
			6-4	16.55	12.45	10.77	8.91	8.91	8.91	8.07	[illegible]
			6-5	12.79	10.01	9.06	7.56	5.87	5.62	5.62	[illegible]
			Ave.	16.23	12.66	11.20	9.41	8.74	7.93	7.76	[illegible]
			S.D.	2.65	1.24	1.37	1.21	1.67	1.34	[illegible]	
6061-T6	6061	Tap	8-1	11.57	1.30	0.19	0.18	0.18	.17	1	[illegible]
			8-2	15.87	.79	0.21	.21	0.21	.21	.21	[illegible]
			8-3	12.36	1.32	1.23	1.23	1.23	1.23	1.23	[illegible]
			8-4	12.42	0.87	0.45	0.43	0.43	0.43	0.43	[illegible]
			8-5	7.67	0.04	0.22	0.22	0.22	0.22	0.27	[illegible]
			Ave.	11.58	.66	0.46	0.45	0.45	.45	0.44	[illegible]
			S.D.	2.18	0.91	0.44	0.45	0.45	.45	0.46	
6061-T6	6061	Deion-ized	7-1	12.35	0.42	0.23	.23	0.22	2	0.21	[illegible]
			7-2	14.4[illegible]	0.32	0.12	0.12	0.12	0.12	0.12	[illegible]
			7-3	16.57	0.13	0.12	0.12	0.12	.12	0.12	[illegible]
			7-4	12.[illegible]	0.14	.12	0.12	0.11	.11	.11	[illegible]
			7-5	21.[illegible]	0.16	.16	.16	.14	.14	0.14	[illegible]
			Ave.	15.7[illegible]	.24	.17	0.16	0.14	.14	.15	[illegible]
			S.D.	[illegible]	.11	[illegible]	[illegible]	[illegible]	[illegible]	[illegible]	

1. Specimens aged in 140°F(60°C) and 95-100% R.H. environment.
2. See Table 15, page 47 for computation of G_I
3. See Figure 9, page 18.

INDIVIDUAL DCB CRACK GROWTH TEST RESULTS

LR100-172 ADHESIVE/NO PRIMER

Exposure Time[1] (Hours)				G_I $(\frac{in.\ lb}{in^2})$ [2]							Failure[3] Mode
				0	1	24	168	336	504	672	
Adherend Alloy	Sweetener[4]	Rinse	Spec. No.								
5052-H34	2024	Tap	3-1	8.04	7.67	7.67	7.67	7.67	7.67	7.67	0-0-0-100
			3-2	4.48	4.37	4.37	4.37	4.37	4.37	4.37	0-0-0-100
			3-3	5.01	4.80	4.80	4.80	4.80	4.80	4.80	0-0-0-100
			3-4	7.36	6.71	6.59	6.59	6.59	5.66	5.23	0-0-0-100
			3-5	0.97	0.92	0.92	0.92	0.92	0.92	0.92	0-0-0-100
			Ave.	5.17	4.89	4.87	4.87	4.87	4.68	4.60	0-0-0-100
			S.D.	2.17	2.60	2.58	2.58	2.58	2.46	2.42	
6061-T6	2024	Tap	5-1	1.06	1.03	1.03	0.99	0.99	0.99	0.99	20-0-0-80
			5-2	1.85	1.77	1.63	1.63	1.53	1.53	1.53	50-0-0-50
			5-3	0.66	0.63	0.61	0.57	0.57	0.57	0.57	10-0-0-90
			5-4	0.46	0.33	0.30	0.28	0.27	0.22	0.22	10-0-0-90
			5-5	2.64	2.56	2.39	2.39	2.39	2 39	2.39	0-0-0-100
			Ave.	1.33	1.26	1.19	1.17	1.15	1.14	1.14	20-0-0-80
			S.D.	0.90	0.90	0.83	0.85	0.84	0.85	0.85	

1. Specimens aged in 140°F(60°C) and 95-100% R.H. environment.
2. See Table 13, page 42 for computation of G_I.
3. See Figure 9, page 18.

U.S. Government Printing Office: 1981 — 757-002/423