AD-A096 876 ARMY ARMAMENT RESEARCH AND DEVELOPMENT COMMAND ABERD--ETC F/G 1/3
A NASTRAN INVESTIGATION OF SIMULATED PROJECTILE DAMAGE EFFECTS --ETC(U)
JAN 81 A T FUTTERER
UNCLASSIFIED ARBRL-TR-02283 SBIE-AD-E430 578 NL

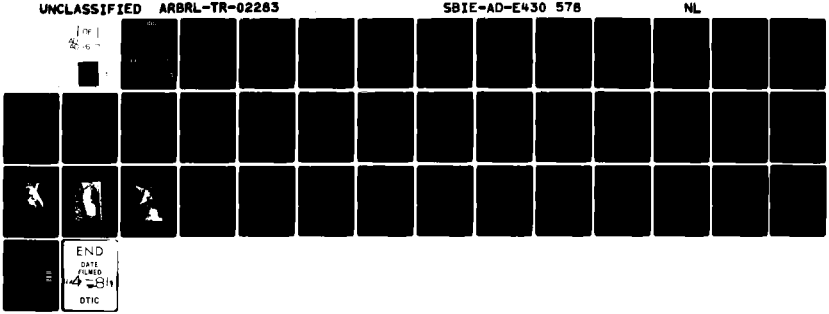

(12) LEVEL III

AD-E430578

AD

AD A096876

TECHNICAL REPORT ARBRL-TR-02283

A NASTRAN INVESTIGATION OF SIMULATED PROJECTILE DAMAGE EFFECTS ON A UH-1B TAIL BOOM MODEL

Arnold T. Futterer

January 1981

US ARMY ARMAMENT RESEARCH AND DEVELOPMENT COMMAND
BALLISTIC RESEARCH LABORATORY
ABERDEEN PROVING GROUND, MARYLAND

Approved for public release; distribution unlimited.

DTIC
ELECTE
MAR 26 1981
S D
B

DTIC FILE COPY

81 3 12 064

Destroy this report when it is no longer needed.
Do not return it to the originator.

Secondary distribution of this report by originating or sponsoring activity is prohibited.

Additional copies of this report may be obtained from the National Technical Information Service, U.S. Department of Commerce, Springfield, Virginia 22161.

The findings in this report are not to be construed as an official Department of the Army position, unless so designated by other authorized documents.

The use of trade names or manufacturers' names in this report does not constitute indorsement of any commercial product.

UNCLASSIFIED

SECURITY CLASSIFICATION OF THIS PAGE (When Data Entered)

REPORT DOCUMENTATION PAGE		READ INSTRUCTIONS BEFORE COMPLETING FORM
1. REPORT NUMBER TECHNICAL REPORT ARBRL-TR-02283	2. GOVT ACCESSION NO. AD-A096 876	3. RECIPIENT'S CATALOG NUMBER
4. TITLE (and Subtitle) A NASTRAN Investigation of Simulated Projectile Damage Effects on a UH-1B Tail Boom Model		5. TYPE OF REPORT & PERIOD COVERED Technical Report 6. PERFORMING ORG. REPORT NUMBER
7. AUTHOR(s) Arnold T. Futterer		8. CONTRACT OR GRANT NUMBER(s)
9. PERFORMING ORGANIZATION NAME AND ADDRESS US Army Ballistic Research Laboratory ATTN: DRDAR-BLB Aberdeen Proving Ground, MD 21005		10. PROGRAM ELEMENT, PROJECT, TASK AREA & WORK UNIT NUMBERS 1L162618AH80
11. CONTROLLING OFFICE NAME AND ADDRESS US Army Armament Research & Development Command US Army Ballistic Research Laboratory ATTN: DRDAR-BL Aberdeen Proving Ground, MD 21005		12. REPORT DATE JANUARY 1981 13. NUMBER OF PAGES
14. MONITORING AGENCY NAME & ADDRESS(if different from Controlling Office)		15. SECURITY CLASS. (of this report) Unclassified 15a. DECLASSIFICATION/DOWNGRADING SCHEDULE

16. DISTRIBUTION STATEMENT (of this Report)

Approved for public release, distribution unlimited.

17. DISTRIBUTION STATEMENT (of the abstract entered in Block 20, if different from Report)

18. SUPPLEMENTARY NOTES

19. KEY WORDS (Continue on reverse side if necessary and identify by block number)

NASTRAN	finite element
composites	simulation
UH-1B	graphite/epoxy
helicopter	

20. ABSTRACT (Continue on reverse side if necessary and identify by block number)

A NASTRAN finite element method analysis was performed on a model of a UH-1B tail boom. Projectile damage was simulated by systematically deleting panels and beam elements. The model was subjected to forces to simulate the flight loads that would be imposed by a 130-knot cruise velocity. Displacements of four points at the base of the vertical fin were used as a measure of loss of structural rigidity. The displacements were measured relative to the unloaded, undamaged state of the tail boom. The analysis was performed

DD FORM 1 JAN 73 1473 EDITION OF 1 NOV 65 IS OBSOLETE

UNCLASSIFIED

SECURITY CLASSIFICATION OF THIS PAGE (When Data Entered)

20. ABSTRACT (continued)

on tail booms constructed of aluminum alloy, then the material constants were changed to represent T300/5208, high-strength Graphite/Epoxy fibrous composite; $[0,\pm45,90]_s$ for the plate elements, $[0,\pm45]_s$ for the beam elements.

TABLE OF CONTENTS

		Page
	LIST OF ILLUSTRATIONS	5
	LIST OF TABLES	7
I.	INTRODUCTION	9
II.	PROCEDURE	9
III.	DISCUSSION OF RESULTS	12
IV.	CONCLUSION	22
	ACKNOWLEDGEMENTS	23
	DISTRIBUTION LIST	35

Accession For
NTIS GRA&I ☑
DTIC TAB ☐
Unannounced ☐
Justification
By
Distribution/
Availability Codes
Dist | Avail and/or Special
A

LIST OF ILLUSTRATIONS

Figure		Page
1.	UH-1B Tail Boom; Side, Front Views and Stations	24
2.	UH-1B Tail Boom Model Grid Points and Numbering Scheme. . .	25
3.	UH-1B Tail Boom Model Beam Element Identification	26
4.	UH-1B Tail Boom Model Plate Element Identification.	27
5.	Damage to Left Side from Single 23 mm Explosive Projectile Hit on Forward Right Side of Tail Boom.	28
6.	Damage to Left Side from Two 23 mm Explosive Projectile Hits on Forward Right Side of Tail Boom	29
7.	Damage to Left Side from Two 23 mm Explosive Projectile Hits on Rear Right Side of Tail Boom.	30
8.	Displacements vs. Damage Weight Loss of Material on Right Side of Tail Boom Constructed of Aluminum Alloy	31
9.	Displacements vs. Damage Weight Loss of Material on Left Side of Tail Boom Constructed of Aluminum Alloy	32
10.	Displacements vs. Damage Weight Loss of Material on Right Side of Tail Boom Constructed of T300/5208 Graphite/Epoxy Composite	33
11.	Displacements vs. Damage Weight Loss of Material on Left Side of Tail Boom Constructed of T300/5208 Graphite/Epoxy Composite	34

LIST OF TABLES

Table		Page
I.	Nomenclature for Damage Configurations that were Investigated	11
II.	Damage to Right Side of Helicopter Tail Boom Constructed of Aluminum Alloy	13,14
III.	Damage to Left Side of Helicopter Tail Boom Constructed of Aluminum Alloy	15,16
IV.	Damage to Right Side of Helicopter Tail Boom Constructed of T300/5208 Composite	18,19
V.	Damage to Left Side of Helicopter Tail Boom Constructed of T300/5208 Composite	20,21

I. INTRODUCTION

This investigation had a twofold objective:

1. To determine the effects of threat projectile damage on the structural rigidity of the UH-1B tail boom under flight loads. If the tail rotor drive shaft coupling is too greatly misaligned it will fail under load resulting in the loss of the helicopter.

2. To estimate the effect on the rigidity of the tail boom of replacing the aluminum alloy in the structure with T300/5208, graphite/epoxy fibrous composite material.

The model of the UH-1B tail boom used in the analysis was originally prepared under contract by Kamen AviDyne[1] (KAD) for the Ballistic Research Laboratory. The model consisted of beams representing the stringers, bulk heads, and longerons and of thin plates representing the skin. The KAD report describes the model in good detail. Figures 1-4 are from that report. For further detail on the assumptions that went into preparing the model it is recommended that a copy of the report be obtained from the Defense Technical Information Center*. Figure 1 gives the tail boom stations with side and top views of the tail boom. The skin is made of 2024 T3 aluminum alloy with a modulus of elasticity of 7.31×10^4 MPa (10.6×10^6 psi) and a mass density equal to 2.672×10^3 kg/m^3 (0.00025 lb sec^2/in^4). The stringers, bulk heads, and longerons are made of 7075 T6 aluminum alloy with a modulus of elasticity of 7.10×10^4 MPa (10.3×10^6 psi) and a mass density of 2.672×10^3 kg/m^3 (0.00025 lb sec^2/in^4). Figures 2-4 illustrate the NASTRAN model developed by KAD and give the numbering schemes for the grid points, beam elements, and plate elements, respectively.

II. PROCEDURE

The investigation was accomplished by using the NASTRAN[2] code, a complex computer program employing the finite element method. NASTRAN calculations for static analysis were performed, 17 for the aluminum alloy construction and 18 for the same structure but using the material

---

[1] Raffi P. Yeghiayan," Modeling of the UH-1B Tail Boom for Analysis by the NASTRAN Computer Program", Ballistic Research Laboratory Contract Report 00358, Kamen AviDyne, Burlington, MA, Feb 1978, AD#A052303

[2] The NASTRAN User's Manual (Level 17.0), National Aeronautics and Space Agency Special Report 222(04), Wash., DC, Dec 31, 1977

*Cameron Station, Alexandria, VA 22314

properties of T300/5208 high strength, graphite-epoxy fibrous composite. The relative displacements of the four points at the rear of the tail boom, with the front of the tail boom fully constrained, were used as a measure of the deterioration of the structural rigidity of the tail boom due to projectile damage. These displacements were compared with the non-damaged, non-loaded tail boom. The flight loads that would be imposed on a helicopter cruising at 130 knots were simulated by loading the structure to simulate the loads and torques that the rotor thrust and elevator would cause at cruise velocity. The assumption was made that a large hole or tear in a skin panel or a break in a longeron, stringer, or bulk head section would destroy the structural integrity of the element representing that skin panel or section. In the model, that damaged element was then deleted. The investigation was conducted by systematically deleting panels and bar elements to simulate greater damage. Damage to the left and to the right side of the tail boom, looking forward, were studied because the right side has thicker skin than the left side. Furthermore, the longitudinal strains were generally compressive on the right side and tensile on the left side. In Table I, the numbers of the elements deleted refer to Figures 3 and 4. As may be noted, the 100 and 200 series numbers refer to the bar elements and the 400 series to the plate elements. Figures 3 and 4 used in conjunction with Table I make it possible to visualize which structural elements of the helicopter were deleted.

Figures 5-7 are pictures of UH-1B tail booms that were used in experiments some years back (about 1975), when 23 mm explosive projectiles were fired at tail booms. The damage configurations as selected for investigation with the present finite element method are therefore typical of the damage to be expected. Generally, there is a small hole on the side where the projectile entered; the heavy damage is to the opposite side when the delay-fused projectile explodes inside the tail boom and sends the blast force and fragments in a forward cone. In the experimental investigation, the damage did not result in structural failure of the tail boom for the damage pictured in Figures 5-7. However, the question was raised as to whether the loss of rigidity could result in misalignment of the drive shaft and damage to the rotor drive shaft coupling with resultant failure of the drive shaft and loss of the helicopter. Configurations 1 through 6, Table I, are typical of Figures 5 and 6 where the damage is to a forward portion of the tail boom. Configurations 7 and 8 are typical of Figure 7 where the damage is to the rear of the tail boom. Tables were constructed to give the displacements of the points at the rear of the loaded, undamaged tail boom and the loaded tail boom with simulated damage relative to the undamaged, unloaded state. The heading "Nomenclature" is defined in Table I. "Material Lost" refers to the mass of the deleted elements. "Direction", "X", "Y", and "Z" gives the displacement of the grid points in the three coordinate directions shown on Figure 2 and "R", which is the square root of the sum of the squares of the three coordinate displacements, gives the total displacement of the grid points specified. The

Table I. Nomenclature for Damage Configurations that were Investigated

Nomen-clature	Left(L) or Right(R) side	Deleted Elements	Configuration
0		No elements deleted	
1	L	413	
	R	419	
2	L	413,136,414	
	R	419,141,418	
3	L	413,147,425	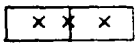
	R	419,153,431	
4	L	425,147,413,136,414	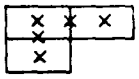
	R	431,153,419,141,418	
5	L	413,147,425,160,426,148, 414,136	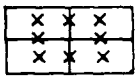
	R	419,154,431,165,430,153, 418,141	
6	L	413,147,425,160,426,161, 148,137,414,136	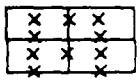
	R	419,154,431,165,430,164, 153,140,418,141	
7	L	456	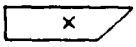
	R	458	
8	L	456,221	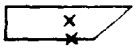
	R	458,222	

displacements are given in millimetres and inches. The values of the displacements are given in an exponential format, i.e., 2.05-2 means 2.05×10^{-2}.

III. DISCUSSION OF RESULTS

Table II contains the results of the calculations for the tail boom constructed of aluminum alloy with the damage to the right side of the helicopter. Examination of the Table reveals that the total displacement of any of the reference grid points is at most 13.2 mm (0.521 in.). Figure 8 is a graph of the total deflection of points on the rear of the tail boom versus mass of aluminum alloy removed from the forward right side of the tail boom. As may be noted, the deflection is quite linear with mass removed until about 1 kg. Then with further removal the displacements become nonlinear suggesting a more rapid approach to failure with further loss of material. Table III contains the results of calculations for the tail boom constructed of aluminum alloy but with the damage now to the forward left side. Maximum displacement of the reference grid points for the configurations investigated was 11.6 mm (0.456 in.) Figure 9 is a graph of deflection of points on the rear of the tail boom versus loss of mass of aluminum alloy removed from the forward left side of the structure. Due to the lighter weight panels on the left side, the material loss never exceeded 1 kg, and there was no evidence of nonlinear behavior to greater displacement with further material loss. In fact, the displacement of the points tend to flatten out with loss above 0.54 kg (1.18 lb) and rise less rapidly. This seems to be related to a structural rather than material response since it also appears in a subsequent response to damage on the left side with the structure made of composite material.

After calculating the displacements for the various damage configurations with the tail boom constructed of aluminum alloys, the calculations were repeated using the material properties of T300/5208 which is a high-strength, graphite-epoxy, fibrous composite. The skin plates were assumed to be constructed of $[0,\pm45,90]_s$ layered composite and the beam elements of $[0,\pm45]_s$ layered composite. T300/5208 was recommended[3] as being high strength and considerably less expensive than the ultra-high modulus graphite-epoxy. Since the composites have less strength in compression than in tension, the material moduli of elasticity for both states were used in the calculations. For damage on the left side the tensile moduli were used, 5.59×10^4 MPa (8.11×10^6 psi) for the plate elements and 6.50×10^4 MPa (9.42×10^6 psi) for the beam elements. For damage on the right side the compressive moduli were used, 5.38×10^4

---

[3]Private communication with Mr. Michael Duhl, Air Force Material Laboratory, Wright Patterson Air Force Base, Dayton, OH.

Table II. Damage to Right Side of Helicopter Tail Boom Constructed of Aluminum Alloy

Nomen-clature	Material Lost lb/kg	Direc-tion	Grid Point Displacements 67 in.	67 mm	70 in.	70 mm	71 in.	71 mm	72 in.	72 mm
0	.0	X	2.18-2	5.54-1	2.45-3	6.22-2	7.52-3	1.91-1	-1.23-2	-3.12-1
	.0	Y	3.30-1	8.38+0	3.30-1	8.38+0	3.23-1	8.20+0	3.23-1	8.20+0
		Z	-2.22-1	-5.64+0	-2.47-1	-6.27+0	-2.46-1	-6.25+0	-2.70-1	-6.86+0
		R	3.98-1	1.01+1	4.12-1	1.05+1	4.06-1	1.03+1	4.21-1	1.07+1
1	.71	X	2.17-2	5.51-1	2.02-3	5.13-2	7.35-3	1.87-1	-1.27-2	-3.23-1
	.32	Y	3.36-1	8.53+0	3.36-1	8.53+0	3.29-1	8.36+0	3.29-1	8.36+0
		Z	-2.24-1	-5.69+0	-2.50-1	-6.35+0	-2.50-1	-6.35+0	-2.74-1	-6.96+0
		R	4.04-1	1.03+1	4.19-1	1.06+1	4.13-1	1.05+1	4.28-1	1.08+1
2	1.46	X	2.14-2	5.44-1	2.21-3	5.61-2	6.49-3	1.65-1	-1.49-2	-3.78-1
	.66	Y	3.60-1	9.14+0	3.60-1	9.14+0	3.53-1	8.97+0	3.53-1	8.97+0
		Z	-2.36-1	-5.99+0	-2.64-1	-6.71+0	-2.62-1	-6.65+0	-2.88-1	-7.32+0
		R	4.30-1	1.09+1	4.46-1	1.13+1	4.40-1	1.12+1	4.56-1	1.16+1
3	1.46	X	2.17-2	5.51-1	1.55-3	3.89-2	7.29-3	1.85-1	-1.31-2	-3.33-1
	.66	Y	3.43-1	8.71+0	3.43-1	8.71+0	3.34-1	8.48+0	3.34-1	8.48+0
		Z	-2.28-1	-5.79+0	-2.55-1	-6.48+0	-2.53-1	-6.43+0	-2.79-1	-7.09+0
		R	4.12-1	1.05+1	4.27-1	1.08+1	4.19-1	1.06+1	4.35-1	1.10+1
4	2.33	X	2.13-2	5.41-1	-1.99-3	-5.05-2	6.63-3	1.68-1	-1.50-2	-3.81-1
	1.06	Y	3.64-1	9.25+0	3.64-1	9.25+0	3.54-1	8.99+0	3.54-1	8.99+0
		Z	-2.40-1	-6.40+0	-2.70-1	-6.86+0	-2.66-1	-6.76+0	-2.94-1	-7.47+0
		R	4.36-1	1.11+1	4.53-1	1.15+1	4.43-1	1.13+1	4.60-1	1.17+1
5	3.00	X	2.12-2	5.38-1	-1.24-3	-3.15-2	6.04-3	1.53-1	-1.64-2	-4.11-1
	1.36	Y	3.78-1	9.60+0	3.78-1	9.60+0	3.69-1	9.37+0	3.69-1	9.37+0
		Z	-2.51-1	-6.38+0	-2.82-1	-7.16+0	-2.77-1	-7.04+0	-3.06-1	-7.77+0
		R	4.54-1	1.15+1	4.72-1	1.20+1	4.61-1	1.17+1	4.79-1	1.22+1

Table II (cont.). Damage to Right Side of Helicopter Tail Boom Constructed of Aluminum Alloy

Load-Structure	Material Load lb/kg	Direction	Grid Point Displacements 67 in.	67 mm	70 in.	70 mm	71 in.	71 mm	72 in.	72 mm
6	3.90	X	2.12-2	5.38-1	-3.25-3	-8.25-2	4.45-3	1.13-1	-1.96-2	-4.98-1
	1.77	Y	4.08-1	1.04+1	4.08-1	1.04+1	4.02-1	1.02+1	4.02-1	1.02+1
		Z	-2.73-1	-6.93+0	-3.04-1	-7.72+0	-3.01-1	-7.65+0	-3.31-1	-8.41+0
		R	4.91-1	1.25+1	5.09-1	1.29+1	5.02-1	1.28+1	5.21-1	1.32+1
7	3.18	X	2.62-2	6.65-1	-6.38-4	-1.62-2	8.04-3	2.04-1	-1.07-2	2.72-1
	1.44	Y	3.51-1	8.92+0	3.51-1	8.92+0	3.03-1	7.70+0	3.03-1	7.70+0
		Z	-2.47-1	-6.27+0	-3.33-1	-8.46+0	-2.74-1	-6.96+0	-3.48-1	-8.84+0
		R	4.31-1	1.09+1	4.84-1	1.23+1	4.09-1	1.04+1	4.61-1	1.17+1
8	4.25	X	2.24-2	5.69-1	4.42-4	1.12-2	7.77-3	1.97-1	-1.10-2	-2.79-1
	1.93	Y	3.53-1	8.97+0	3.53-1	8.97+0	3.03-1	7.70+0	3.03-1	7.70+0
		Z	-2.48-1	-6.30+0	-3.37-1	-8.56+0	-2.76-1	-7.01+0	-3.52-1	-8.94+0
		R	4.31-1	1.09+1	4.88-1	1.24+1	4.10-1	1.04+1	4.64-1	1.18+1

Table III. Damage to Left Side of Helicopter Tail Boom Constructed of Aluminum Alloy

Nomen-ciature	Material Lost lb/kg	Direc-tion	Grid Point Displacements							
			67		70		71		72	
			in.	mm	in.	mm	in.	mm	in.	mm
0	.0	X	2.18-2	5.54-1	2.45-3	6.22-2	7.52-3	1.91-1	-1.23-2	-3.12-1
	.0	Y	3.30-1	8.38+0	3.30-1	8.38+0	3.23-1	8.20+0	3.23-1	8.20+0
		Z	-2.22-1	-5.64+0	-2.47-1	-6.27+0	-2.46-1	-6.25+0	-2.70-1	-6.86+0
		R	3.98-1	1.01+1	4.12-1	1.05+1	4.06-1	1.03+1	4.21-1	1.07+1
1	.35	X	2.27-2	5.77-1	2.84-3	7.21-2	8.15-3	2.07-1	-1.20-2	-3.05-1
	.16	Y	3.38-1	8.59+0	3.38-1	8.59+0	3.31-1	8.41+0	3.31-1	8.41+0
		Z	-2.24-1	-5.69+0	-2.50-1	-6.35+0	-2.50-1	-6.35+0	-2.74-1	-6.96+0
		R	4.05-1	1.02+1	4.20-1	1.07+1	4.15-1	1.05+1	4.30-1	1.09+1
2	.88	X	2.38-2	6.05-1	3.24-3	8.23-2	9.33-3	2.37-1	-1.15-2	-2.92-1
	.40	Y	3.52-1	8.94+0	3.52-1	8.94+0	3.46-1	8.79+0	3.46-1	8.79+0
		Z	-2.24-1	-5.69+0	-2.49-1	-6.32+0	-2.46-1	-6.25+0	-2.73-1	-6.93+0
		R	4.17-1	1.06+1	4.31-1	1.09+1	4.26-1	1.08+1	4.41-1	1.12+1
3	.78	X	2.34-2	5.94-1	3.15-3	8.00-2	8.69-3	2.21-1	-1.18-2	3.00-1
	.35	Y	3.44-1	8.74+0	3.44-1	8.74+0	3.38-1	8.59+0	3.38-1	8.59+0
		Z	-2.26-1	-5.74+0	-2.51-1	-6.38+0	-2.51-1	-6.38+0	-2.75-1	-6.99+0
		R	4.12-1	1.05+1	4.26-1	1.08+1	4.21-1	1.07+1	4.36-1	1.11+1
4	1.18	X	2.49-2	6.32-1	3.69-3	9.37-2	1.02-2	2.59-1	-1.12-2	-2.84-1
	.54	Y	3.61-1	9.17+0	3.61-1	9.17+0	3.56-1	9.04+0	3.56-1	9.04+0
		Z	-2.26-1	-5.74+0	-2.52-1	-6.40+0	-2.52-1	-6.40+0	-2.76-1	-7.01+0
		R	4.26-1	1.08+1	4.40-1	1.12+1	4.36-1	1.11+1	4.50-1	1.14+1
5	1.49	X	2.52-2	6.40-1	3.74-3	9.50-2	1.05-2	2.67-1	-1.11-2	-2.82-1
	.68	Y	3.64-1	9.25+0	3.64-1	9.25+0	3.59-1	9.12+0	3.59-1	9.12+0
		Z	-2.24-1	-5.69+0	-2.50-1	-6.35+0	-2.50-1	-6.35+0	-2.74-1	-6.96+0
		R	4.27-1	1.08+1	4.42-1	1.12+1	4.37-1	1.11+1	4.52-1	1.15+1

Table III cont. Damage to Left Side of Helicopter Tail Boom Constructed of Aluminum Alloy

Component Failure	Material Lost lb/kg	Direction	Grid Point Displacements 67 in.	67 mm	70 in.	70 mm	71 in.	71 mm	72 in.	72 mm
6	2.08	X	2.58-2	6.55-1	3.83-3	9.73-2	1.13-2	2.87-1	-1.07-2	-2.72-1
	.94	Y	3.72-1	9.45+0	3.72-1	9.45+0	3.68-1	9.35+0	3.68-1	9.35+0
		Z	-2.19-1	-5.56+0	-2.45-1	-6.22+0	-2.44-1	-6.20+0	-2.69-1	-6.83+0
		R	4.32-1	1.10+1	4.45-1	1.13+1	4.42-1	1.12+1	4.56-1	1.16+1
7	3.18	X	2.44-2	6.20-1	1.79-3	4.55-2	5.87-3	1.49-1	-1.29-2	-3.28-1
	1.44	Y	3.51-1	8.92+0	3.51-1	8.92+0	3.03-1	7.70+0	3.03-1	7.70+0
		Z	-1.38-1	-3.51+0	-2.23-1	-5.66+0	-1.71-1	-4.34+0	-2.45-1	-6.22+0
		R	3.77-1	9.58+0	4.16-1	1.06+1	3.48-1	8.84+0	3.90-1	9.91+0
8	4.25	X	2.48-2	6.30-1	1.94-3	4.93-2	6.23-3	1.58-1	-1.26-2	-3.20-1
	1.93	Y	3.53-1	8.97+0	3.53-1	8.97+0	3.03-1	7.70+0	3.03-1	7.70+0
		Z	-1.34-1	-3.40+0	-2.22-1	-5.64+0	-1.68-1	-4.27+0	-2.46-1	-6.25+0
		R	3.78-1	9.60+0	4.17-1	1.06+1	3.46-1	8.79+0	3.88-1	9.86+0

MPa (7.81×10^6 psi) for the plate elements and 6.43×10^4 MPa (9.32×10^6 psi) for the beam elements. A mass density of 1.603×10^3 kg/m^3 (0.00015 lb sec^2/in.^{4}) was used for the beam and plate elements. The total displacements for the various damage configurations for the right side of a tail boom constructed of T300/5208 composite are compiled in Table IV. The maximum displacements of the reference grid points was 17.0 mm (0.668 in.). Figure 10 is a graph of the relative displacement of points on the rear of the tail boom versus composite material lost through simulated projectile damage to the right side. For the same amount of damage loss of weight, the displacements for aluminum are less than for composite material, as is to be expected, since the aluminum has a higher modulus. The nonlinearity of response sets in at above 0.4 kg (0.88 lb) for the composite, less than for aluminum, for the same reason, lower modulus. Table V is a tabulation of displacements versus material lost on the left side of the tail boom. The maximum displacement of the reference grid points is 14.2 mm (0.558 in.). Figure 11 is a graph of displacements versus material lost due to damage to the left side of the tail boom constructed of T300/5208 composite material. The response again appears to flatten out after rising linearly with weight loss. The effect of the lower modulus of the composite compared to aluminum is apparent as the change in response takes place at a lower weight loss.

Note that the points for configurations with nomenclature 7 and 8 were not plotted on the graphs. Since the damage for these configurations was to the rear left and right side of the helicopter tail boom the response was very different from that for damage to the front. Plotting them on the same graphs would not be relevant. Suffice to say that, although the damage loss of material was greater, the deflection response was less than for damage to the front side. The weakened structure gives at the point of damage and the deflection transmitted through a lever arm that is the length of the tail boom from the damaged frontal area, gives a larger deflection at the rear than for an equivalent amount of yielding at the rear damage transmitted through the smaller lever arm.

The undamaged configuration, nomenclature 0, in Tables IV and V show displacement differences amounting to between 2.5 and 3.2 percent due to using the compressive moduli in one calculation and the tensile moduli in the other. The differences in displacements amount to 0.4 mm (0.016 in.) at all four points, a negligible amount of difference.

In a test program conducted by Bell Helicopter Company[4] in 1975 to reduce the vulnerability of the tail boom, the effect of misalignment on the tail rotor drive shaft was analyzed. The analysis was based on the

---

[4] D.A. Reisdorfer: "TailBoom Vulnerability Reduction Test Program, Interim Report No. 1, Volume I," Report No. 699-099-004, Aug. 1975, Boeing Helicopter Company, Ft. Worth, TX

										in.	mm.
[illegible]	[illegible]	X	[illegible]	[illegible]	[illegible]	[illegible]	[illegible]	[illegible]	[illegible]	-1.56-2	[illegible]
	[illegible]	Y	[illegible]	[illegible]	[illegible]	[illegible]	[illegible]	[illegible]	[illegible]	4.12-1	[illegible]
		Z	[illegible]	[illegible]	[illegible]	[illegible]	[illegible]	[illegible]	[illegible]	-3.46-1	[illegible]
		R	[illegible]	[illegible]	[illegible]	[illegible]	[illegible]	[illegible]	[illegible]	5.38-1	[illegible]
[illegible]	[illegible]	X	[illegible]	[illegible]	[illegible]	[illegible]	[illegible]	[illegible]	[illegible]	-1.61-2	[illegible]
	[illegible]	Y	[illegible]	[illegible]	[illegible]	[illegible]	[illegible]	[illegible]	[illegible]	4.19-1	[illegible]
		Z	[illegible]	[illegible]	[illegible]	[illegible]	[illegible]	[illegible]	[illegible]	-3.50-1	-8.89+0
		R	[illegible]	[illegible]	[illegible]	[illegible]	[illegible]	[illegible]	[illegible]	5.46-1	1.39+1
[illegible]	[illegible]	X	[illegible]	[illegible]	[illegible]	[illegible]	[illegible]	[illegible]	[illegible]	-1.87-2	[illegible]
	[illegible]	Y	[illegible]	[illegible]	[illegible]	[illegible]	[illegible]	[illegible]	[illegible]	4.49-1	[illegible]
		Z	[illegible]	[illegible]	[illegible]	[illegible]	[illegible]	[illegible]	[illegible]	-3.68-1	[illegible]
		R	[illegible]	[illegible]	[illegible]	[illegible]	[illegible]	[illegible]	[illegible]	5.81-1	[illegible]
[illegible]	[illegible]	X	[illegible]	[illegible]	[illegible]	[illegible]	[illegible]	[illegible]	[illegible]	-1.66-2	[illegible]
	[illegible]	Y	[illegible]	[illegible]	[illegible]	[illegible]	[illegible]	[illegible]	[illegible]	4.25-1	[illegible]
		[illegible]	[illegible]	[illegible]	[illegible]	[illegible]	[illegible]	[illegible]	[illegible]	-3.57-1	[illegible]
		R	[illegible]	[illegible]	[illegible]	[illegible]	[illegible]	[illegible]	[illegible]	5.55-1	[illegible]
[illegible]	[illegible]	[illegible]	[illegible]	[illegible]	[illegible]	[illegible]	[illegible]	[illegible]	[illegible]	-1.88-2	[illegible]
	[illegible]	[illegible]	[illegible]	[illegible]	[illegible]	[illegible]	[illegible]	[illegible]	[illegible]	4.50-1	[illegible]
		[illegible]	[illegible]	[illegible]	[illegible]	[illegible]	[illegible]	[illegible]	[illegible]	-3.75-1	[illegible]
		[illegible]	[illegible]	[illegible]	[illegible]	[illegible]	[illegible]	[illegible]	[illegible]	5.86-1	[illegible]
[illegible]	[illegible]	[illegible]	[illegible]	[illegible]	[illegible]	[illegible]	[illegible]	[illegible]	[illegible]	[illegible]	[illegible]
	[illegible]	[illegible]	[illegible]	[illegible]	[illegible]	[illegible]	[illegible]	[illegible]	[illegible]	4.67-1	[illegible]
		[illegible]	[illegible]	[illegible]	[illegible]	[illegible]	[illegible]	[illegible]	[illegible]	-3.97-1	[illegible]
		[illegible]	[illegible]	[illegible]	[illegible]	[illegible]	[illegible]	[illegible]	[illegible]	6.13-1	[illegible]

Table IX. Est. Damage to Right Side of Helicopter Tail Boom Constructed of T300/5208 Composite

Nomenclature	Material Lost lb/kg	Direction	Grid Point Displacements 67 in.	67 mm	7 in.	7 mm	71 in.	71 mm	72 in.	72 mm
6	[illegible]	X	2.70-2	6.86-1	-4.58-3	-1.16-2	5.39-3	1.51-1	-2.52-2	-6.40-1
	[illegible]	Y	5.24-1	1.33+1	5.24-1	1.33+1	5.15-1	1.31+1	5.15-1	1.31+1
		Z	-3.46-1	-8.79+0	-3.93-1	-9.98+0	-3.83-1	-9.73+0	-4.26-1	-1.08+1
		R	6.28-1	1.60+1	6.55-1	1.66+1	6.42-1	1.63+1	6.68-1	1.70+1
7	1.91	X	2.87-2	7.29-1	-3.00-5	-7.62-4	1.00-2	2.54-1	-1.39-2	-3.53-1
	.87	Y	4.46-1	1.13+1	4.46-1	1.13+1	3.89-1	9.88+0	3.89-1	9.88+0
		Z	-3.07-1	-7.80+0	-4.13-1	-1.05+1	-3.42-1	-8.69+0	-4.32-1	-1.10+1
		R	5.42-1	1.38+1	6.08-1	1.54+1	5.18-1	1.32+1	5.81-1	1.48+1
8	2.55	X	2.85-2	7.24-1	-5.14-4	-1.32-2	9.64-3	2.45-1	-1.44-2	-3.66-1
	1.16	Y	4.48-1	1.14+1	4.48-1	1.14+1	3.90-1	9.91+0	3.90-1	9.91+0
		Z	-3.10-1	-7.87+0	-4.17-1	-1.06+1	-3.45-1	-8.76+0	-4.37-1	-1.11+1
		R	5.45-1	1.38+1	6.12-1	1.55+1	5.21-1	1.32+1	5.85-1	1.49+1

Table V. Damage to Left Side of Helicopter Tail Boom Constructed of T300/5208 Composite

Nomen-clature	Material Lost lb/kg	Direction	Grid Point Displacements							
			77		7[illegible]		71		72	
			in.	mm	in.	mm	in.	mm	in.	mm
0	.0	X	2.70-2	6.86-1	2.75-3	6.99-2	9.12-3	2.32-1	-1.51-2	-3.84-1
	.0	Y	4.10-1	1.04+1	4.10-1	1.04+1	4.00-1	1.02+1	4.00-1	1.02+1
		Z	-2.72-1	-6.91+0	-3.07-1	-7.80+0	-3.03-1	-7.70+0	-3.36-1	-8.53+0
		R	4.93-1	1.25+1	5.12-1	1.30+1	5.02-1	1.27+1	5.23-1	1.33+1
1	.21	X	2.80-2	7.11-1	3.19-3	8.10-2	9.83-3	2.50-1	-1.49-2	-3.78-1
	.10	Y	4.18-1	1.06+1	4.18-1	1.06+1	4.10-1	1.04+1	4.10-1	1.04+1
		Z	-2.75-1	-6.99+0	-3.11-1	-7.90+0	-3.06-1	-7.77+0	-3.40-1	-8.64+0
		R	5.01-1	1.27+1	5.21-1	1.[illegible]+1	5.12-1	1.30+1	5.33-1	1.35+1
2	.53	X	2.95-2	7.49-1	3.68-3	9.35-2	1.13-2	2.87-1	-1.43-2	-3.63-1
	.24	Y	4.35-1	1.10+1	4.35-1	1.10+1	4.28-1	1.09+1	4.28-1	1.09+1
		Z	-2.76-1	-7.01+0	-3.12-1	-7.92+0	-3.08-1	-7.82+0	-3.42-1	-8.69+0
		R	5.15-1	1.31+1	5.34-1	1.35+1	5.26-1	1.34+1	5.46-1	1.39+1
3	.47	X	2.88-2	7.32-1	3.55-3	9.02-2	1.04-2	2.64-1	-1.42-2	-3.61-1
	.21	Y	4.26-1	1.08+1	4.26-1	1.08+1	4.18-1	1.06+1	4.18-1	1.06+1
		Z	-2.76-1	-7.01+0	-3.12-1	-7.92+0	-3.08-1	-7.82+0	-3.42-1	-8.69+0
		R	5.08-1	1.29+1	5.28-1	1.34+1	5.19-1	1.32+1	5.40-1	1.37+1
4	.71	X	3.07-2	7.80-1	4.18-3	1.06-1	1.22-2	3.10-1	-1.40-2	-3.56-1
	.32	Y	4.46-1	1.13+1	4.46-1	1.13+1	4.40-1	1.12+1	4.40-1	1.12+1
		Z	-2.76-1	-7.01+0	-3.13-1	-7.95+0	-3.08-1	-7.82+0	-3.42-1	-8.69+0
		R	5.25-1	1.33+1	5.45-1	1.38+1	5.37-1	1.36+1	5.57-1	1.41+1
5	.89	X	3.10-2	7.87-1	4.24-3	1.08-1	1.26-2	3.20-1	-1.38-2	-3.51-1
	.41	Y	4.50-1	1.14+1	4.50-1	1.14+1	4.43-1	1.13+1	4.43-1	1.13+1
		Z	-2.73-1	-6.93+0	-3.10-1	-7.87+0	-3.05-1	-7.75+0	-3.39-1	-8.61+0
		R	5.27-1	1.34+1	5.46-1	1.39+1	5.38-1	1.37+1	5.58-1	1.42+1

Table V Cont. Damage to Left Side of Helicopter Tail Boom Constructed of T300/5208 Composite

Nomen-clature	Material Lost lb/kg	Direc-tion	Grid Point Displacements							
			67		70		71		72	
			in.	mm	in.	mm	in.	mm	in.	mm
6	1.25	X	3.18-2	8.08-1	4.36-3	1.18-8	1.37-2	3.48-1	-1.32-2	3.35-1
	.57	Y	4.61-1	1.17+1	4.61-1	1.17+1	4.55-1	1.16+1	4.55-1	1.16+1
		Z	-2.67-1	-6.78+0	-3.04-1	-7.72+0	-2.99-1	-7.59+0	-3.22-1	-8.18+0
		R	5.33-1	1.35+1	5.52-1	1.40+1	5.45-1	1.38+1	5.58-1	1.42+1
7	1.91	X	2.99-2	7.59-1	2.02-3	5.13-2	7.33-3	1.86-1	-1.59-2	-4.04-1
	.87	Y	4.33-1	1.10+1	4.33-1	1.10+1	3.78-1	9.60+0	3.78-1	9.60+0
		Z	-1.79-1	-4.55+0	-2.81-1	-7.14+0	-2.20-1	-5.59+0	-3.07-1	-7.80+0
		R	4.69-1	1.19+1	5.16-1	1.31+1	4.37-1	1.11+1	4.87-1	1.24+1
8	2.55	X	3.03-2	7.07-1	2.20-3	5.59-2	7.81-3	1.98-1	-1.55-2	-3.94-1
	1.16	Y	4.35-1	1.10+1	4.35-1	1.10+1	3.78-1	9.60+0	3.78-1	9.60+0
		Z	-1.75-1	-4.45+0	-2.79-1	-7.09+0	-2.16-1	-5.49+0	-3.05-1	-7.75+0
		R	4.69-1	1.19+1	5.17-1	1.31+1	4.35-1	1.11+1	4.86-1	1.23+1

limiting stress level of the couplings in the drive shaft using experience from studies of other couplings. The coupling set was analyzed for the cruise condition of the helicopter which would require 40 HP through the tail rotor drive system. Results indicated that for the helicopter to maintain a sustained cruise, and then hover long enough to land, the maximum coupling misalignment that could be tolerated would be 2.5 degrees. Using the fact that the tail rotor drive shaft is supported at stations 143.3 and slightly aft of station 194.3, an incremental deflection of 56.6 mm (2.23 in.) was calulated as the maximum that could be tolerated between these two stations for extended cruise conditions. An even greater deflection would then occur at tail boom station 227.0 due to the additional lever arm. The deflections that were calculated in the present study with the damage inflicted are considerably lower than the above figures. However, a NASTRAN model of the tail boom would be expected to be stiffer than an experimental counterpart. Among other possible reasons are that the model has no slippage at rivet points, and the skin is not permitted to buckle and so is stiffer.

A further consideration is that the tail boom constructed of aluminum alloy had a structural weight of 57.7 kg (127.1 lb), and in the model additional nonstructural weight amounting to 24.0 kg (52.9 lb) was distributed along the length of the tail boom. Replacement by the lighter weight composite would result in a weight saving of from 23.1 kg (50.9 lb) to 32.7 kg (72.0 lb), depending upon to what extent the aluminum alloy could be replaced by the composite material. This reduction in weight could make the helicopter more maneuverable or better able to carry a larger payload. Another consideration is whether use of the more expensive ultra-modulus composite, with a modulus almost twice that of T300/5208 and about 50% greater than the aluminum alloy, is warranted. The density of the ultra-modulus graphite/epoxy is only about two percent greater than that of T300/5208 and therefore the weight savings would be comparable.

IV. CONCLUSION

The investigation, using the NASTRAN code showed that the loss of rigidity due to simulated projectile damage was not sufficient to result in misalignment of the rotor drive shaft to a degree that would result in failure of the drive shaft coupling for tailbooms of aluminum or of T300/5208 graphite/epoxy composite material. While the T300/5208 tail boom was less rigid, the calculations indicated displacements that were not sufficient to cause drive shaft failure according to the criterion set by the Bell study.

The composite material part of the problem was treated by simply changing the material constants from those of aluminum to those of the composite. It is probable that if a tail boom is designed using fibrous composite material that the construction of the tail boom would result in a considerably different structure than the skin plates, stringers,

longerons and bulk heads that are used in the aluminum alloy design. It would also be of interest to compare the responses of composite and aluminum alloy structures for explosive projectiles like the 23 mm. Would the damage be greater or less per hit? Would the blast result in considerable delamination which would seriously affect the integrity of the structure? Another factor is, of course, the cost, not only of the materials themselves but also of fabrication of the structure. In the final decision as to which material to use, all of the above factors must be considered.

Conducting an experiment to evaluate the actual deflection under load of a model closely approximating the one used in the NASTRAN calculations would also be useful.

ACKNOWLEDGMENTS

Dr. Ennis F. Quigley was the contract officer's representative on the contract that resulted in the generation of the model of the UH-1B tail boom that was used in this investigation. I appreciate his helpful discussions with regard to the model that was developed. Mr. Thomas F. Erline contributed helpful discussions on the use of the UNIVAC computer, Hazletine terminal, and UNIVAC version of the NASTRAN program. My thanks also to the operating staff of the UNIVAC computer who expedited many runs and aided me in getting past some of the blocks caused by inexperience with that specific computer. I take this opportunity to acknowledge the assistance of Mr. Wyatt K. Wallace and Ms. Joan H. Walter, Applications Support and Mr.Robert J. Hartman and Mr. Robert E. Amos, Techniques Science and Engineering at the Edgewood area UNIVAC installation on this and earlier projects. My thanks also to Dr. Donald F. Haskell, team leader of the Army Aircraft Systems Team, for helpful discussions and supplying me with useful reports, references, and papers.

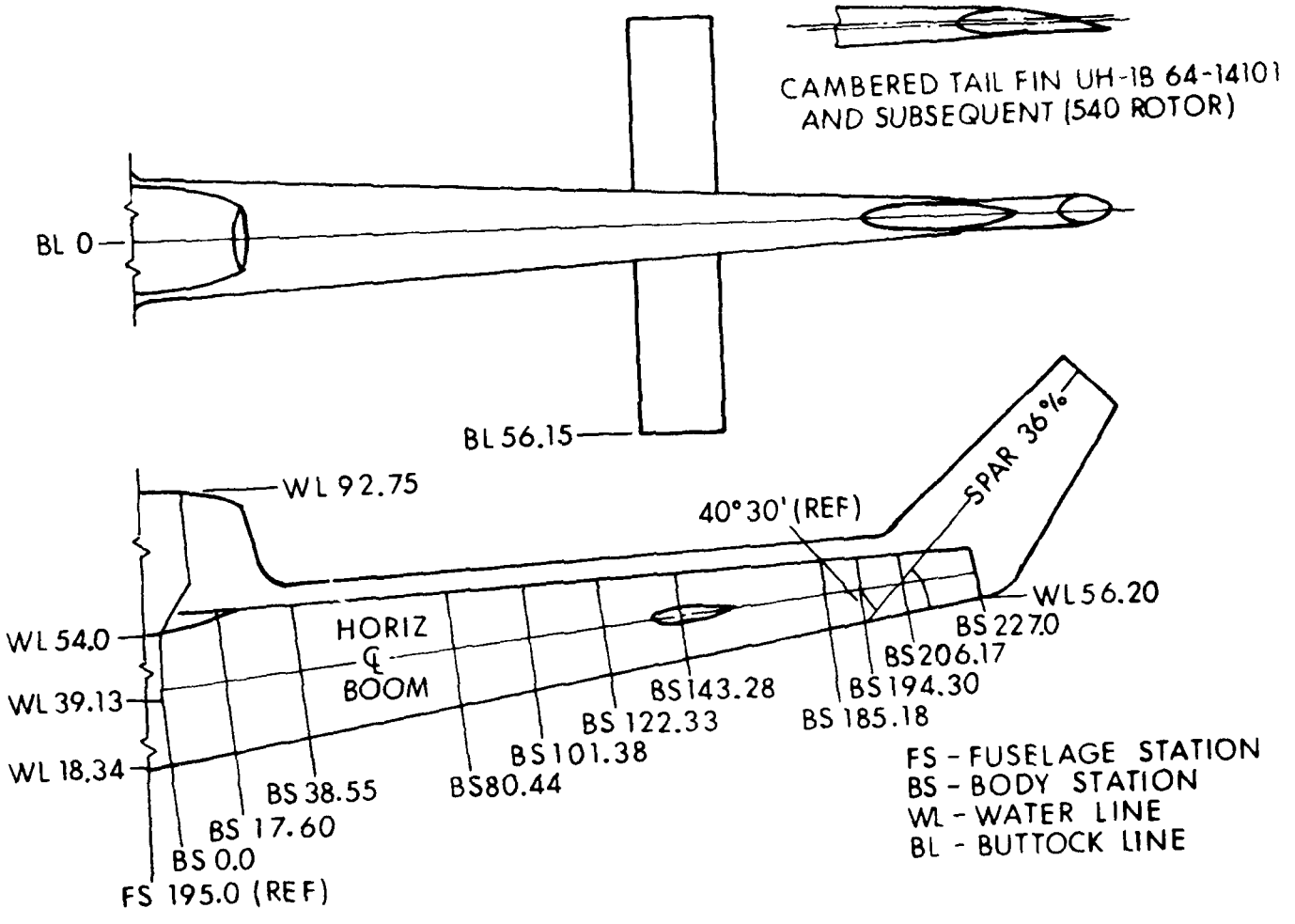

Figure 1. UH-1B Tail Boom; Side, Front Views and Stations

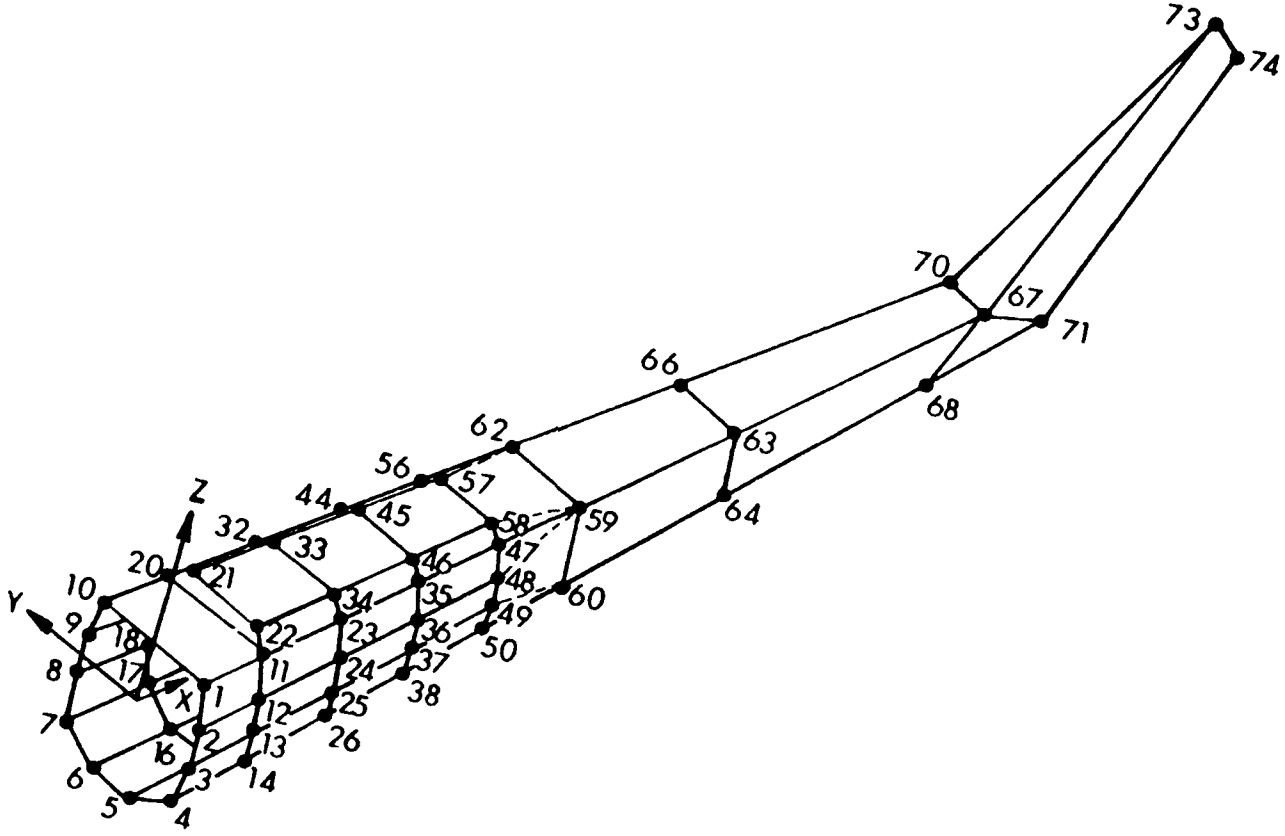

Figure 2. UH-1B Tail Boom Model Grid Points and Numbering Scheme

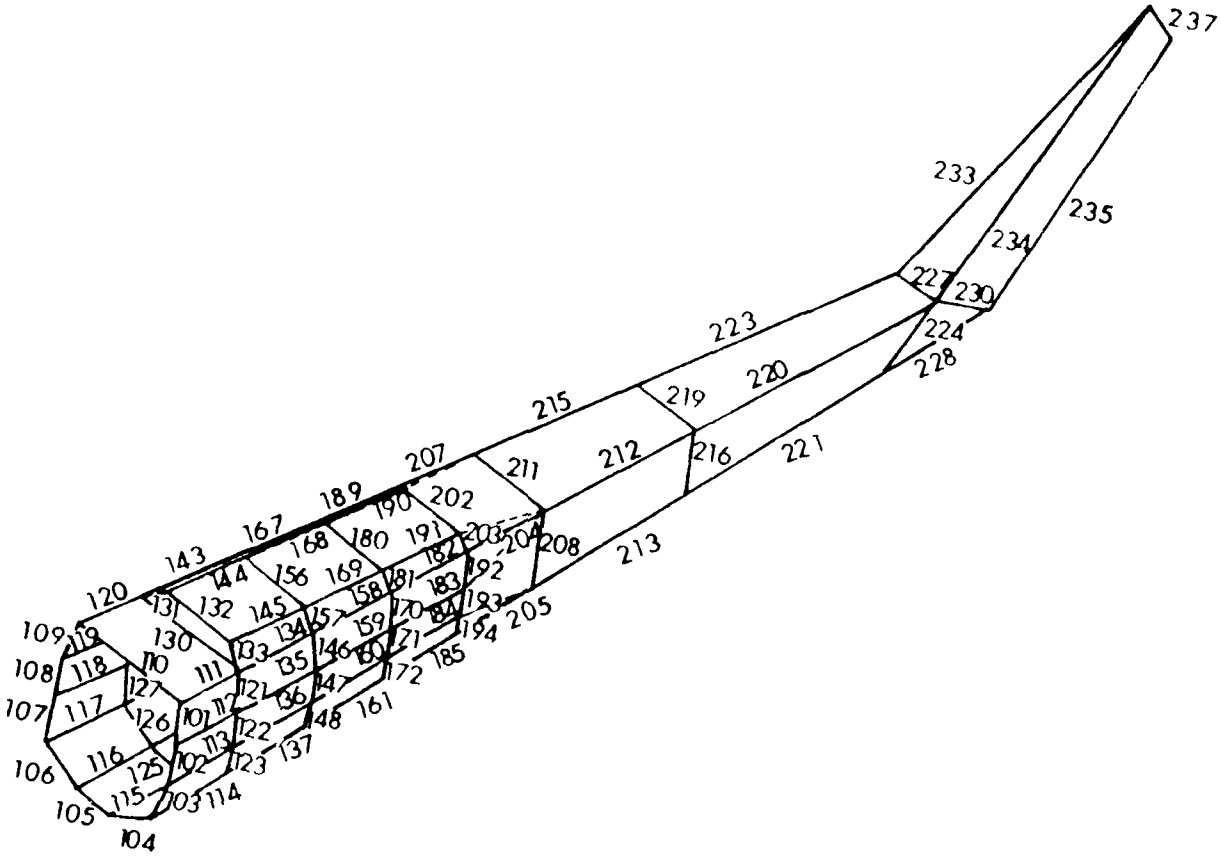

Figure 3. UH-1F Tail Boom Model Beam Element Identification

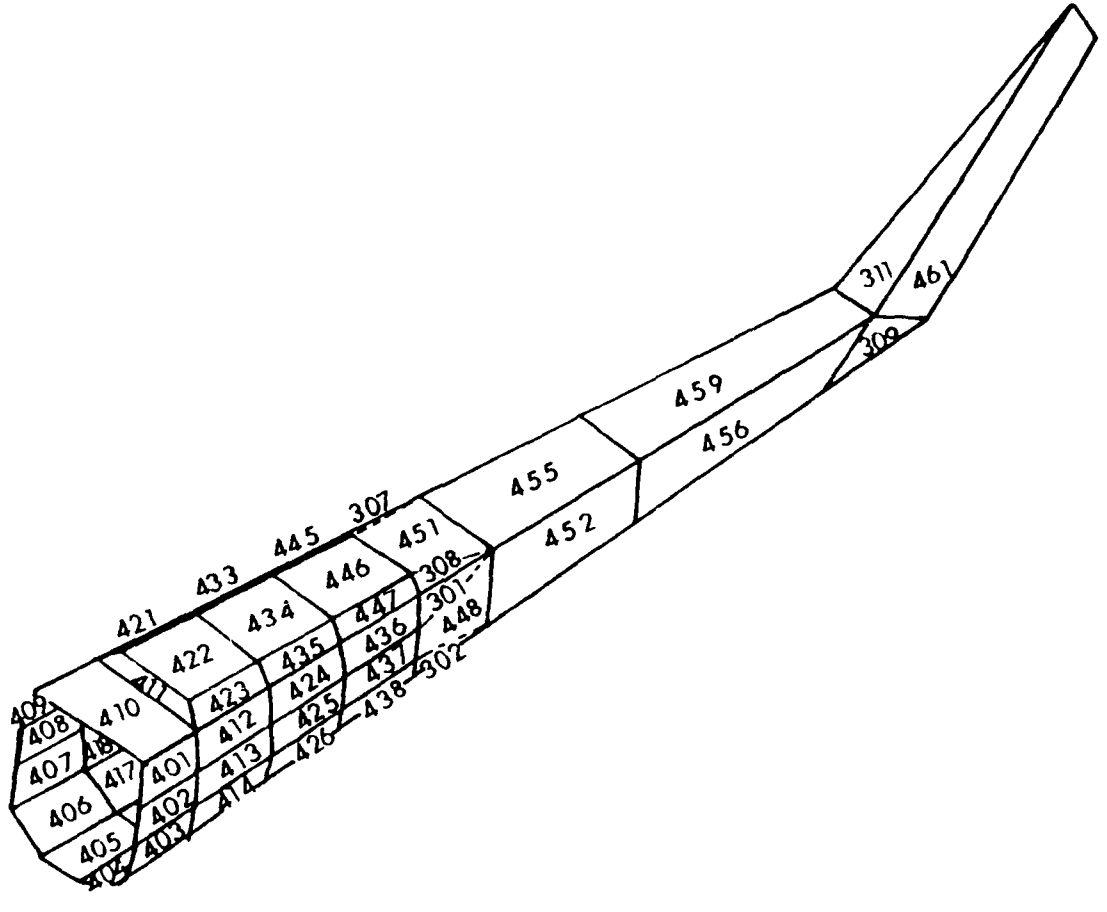

Figure 4. PH-1B Tail Boom Model Plate Element Identification

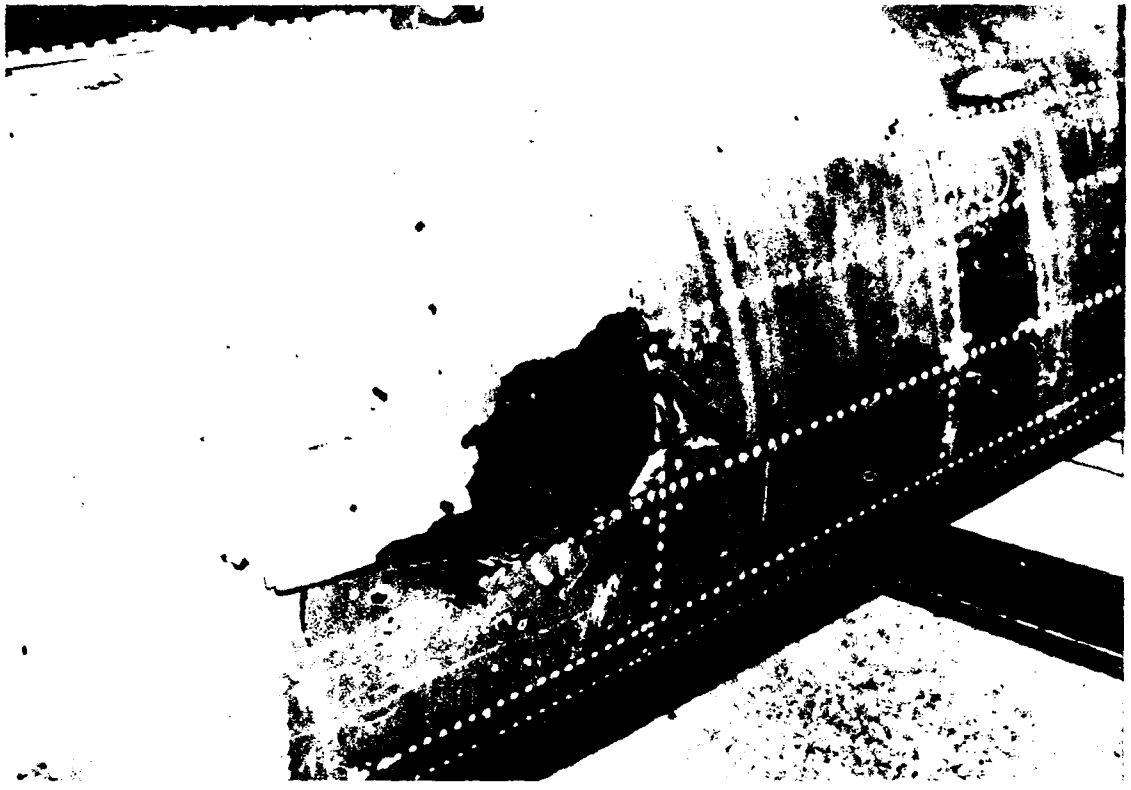

Figure 5. Damage to Left Side from Single 23 mm Explosive Projectile Hit on Forward Right Side of Tail Boom

Figure 6. Damage to Left Side from Two 23 mm Explosive Projectile Hits on Forward Right Side of Tail Boom

Figure 7. Damage to Left Side from Two 23 mm Explosive Projectile Hits on Rear Right Side of Tail Boom

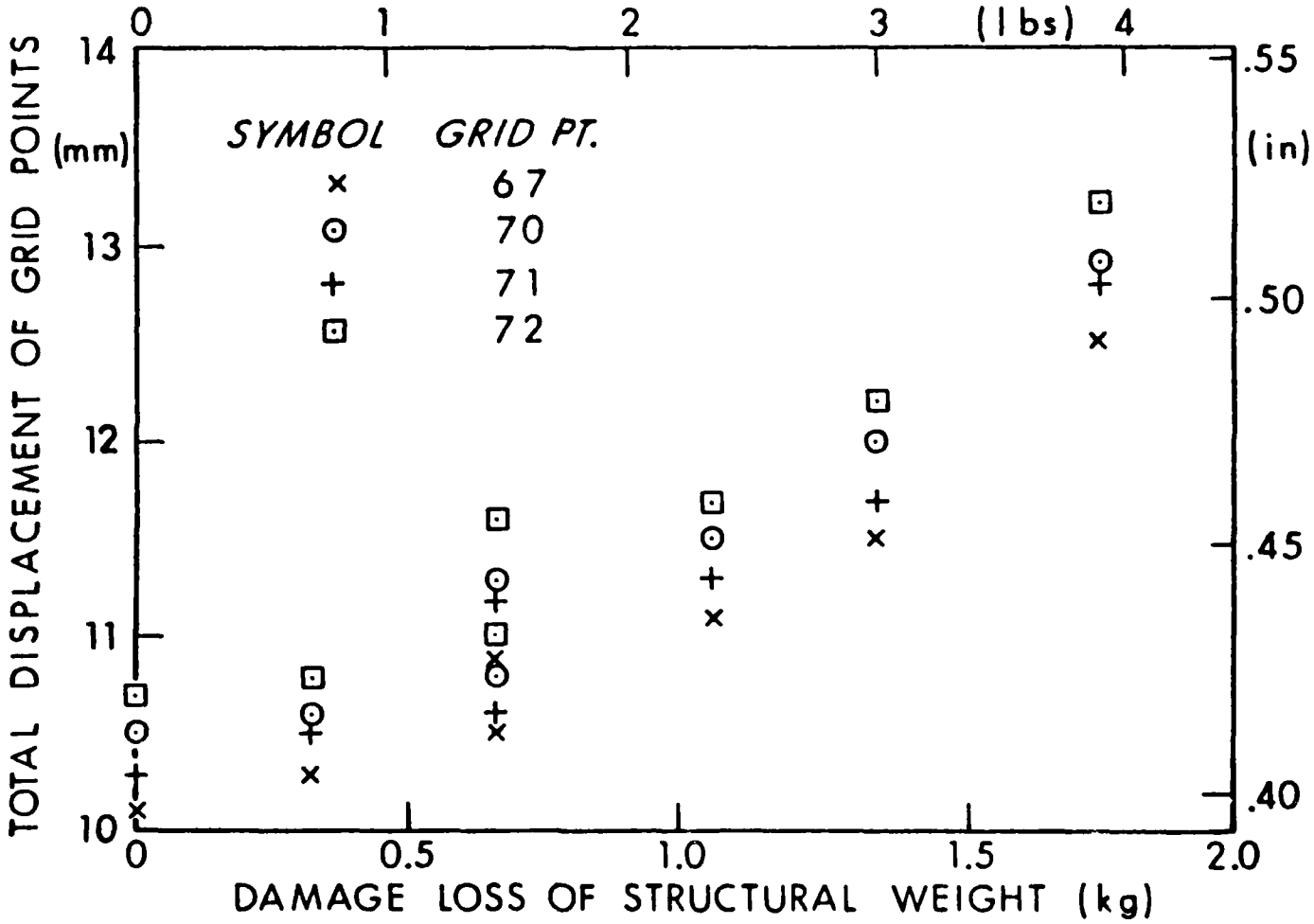

Figure 8. Displacements vs. Damage Weight Loss of Material on Right Side of Tail Boom Constructed of Aluminum Alloy

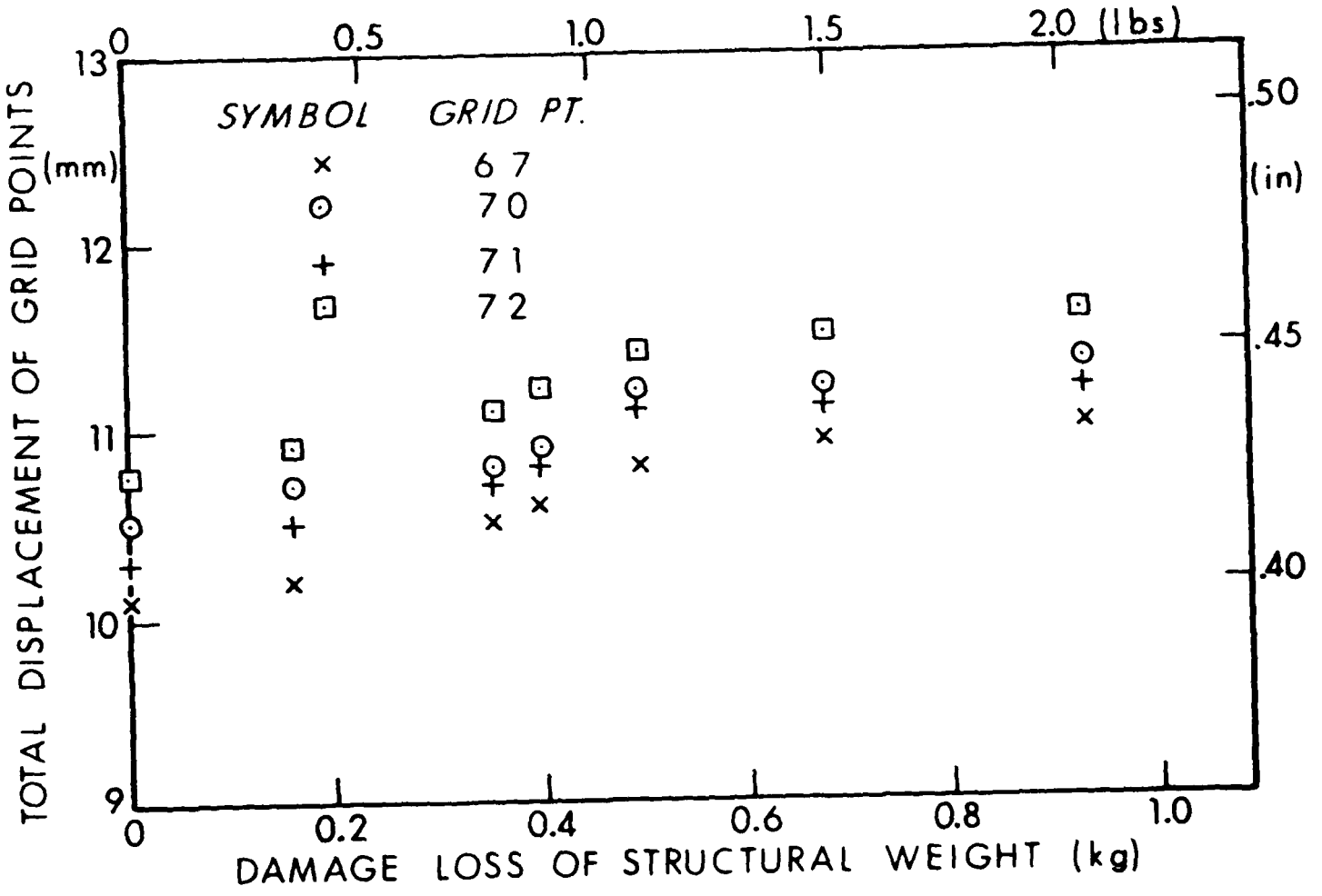

Figure 9. Displacements vs. Damage Weight Loss of Material on Left Side of Tail Boom Constructed of Aluminum Alloy

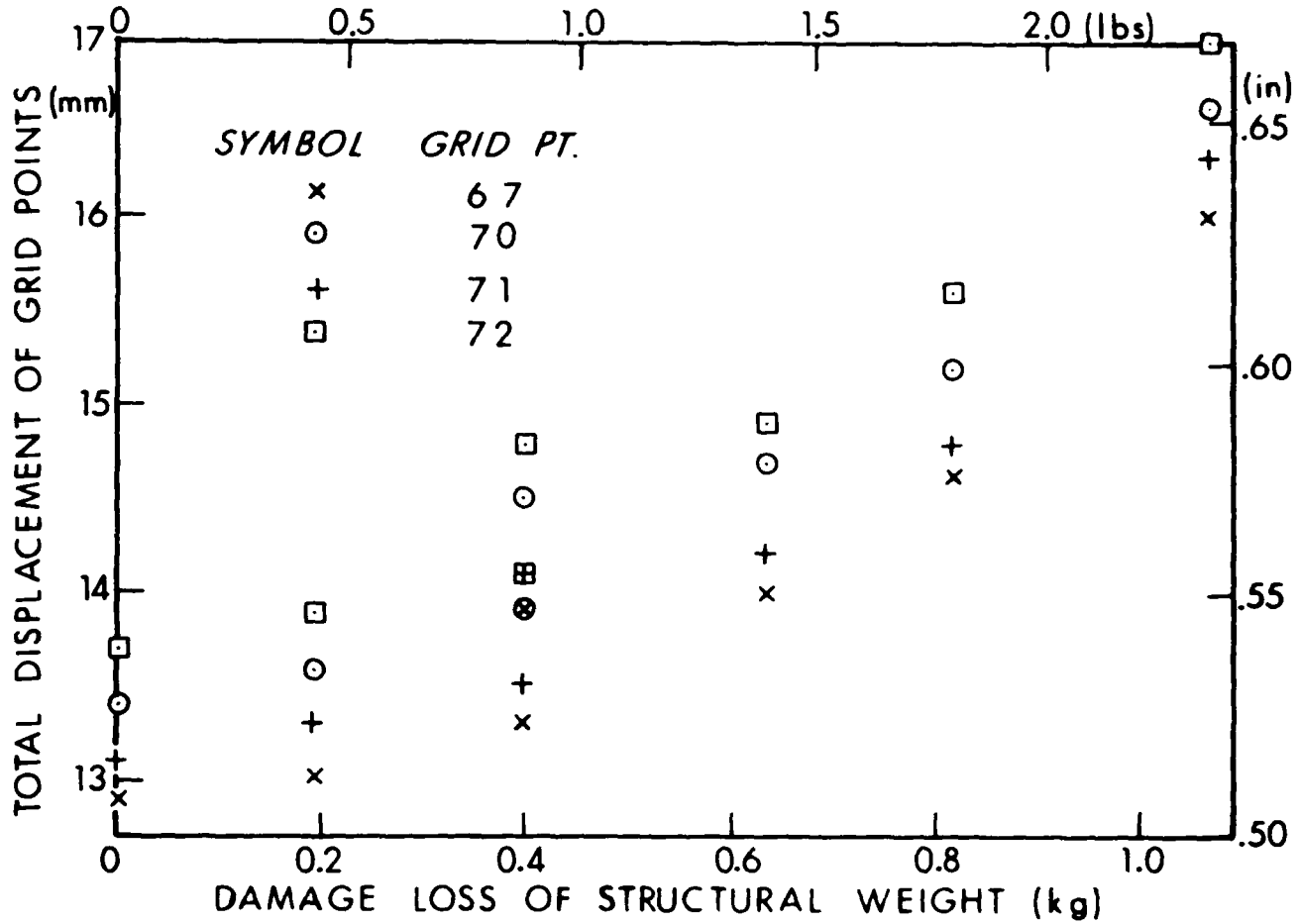

Figure 10. Displacements vs. Damage Weight Loss of Material on Right Side of Tail Boom Constructed of T300/5208 Graphite/Epoxy Composite

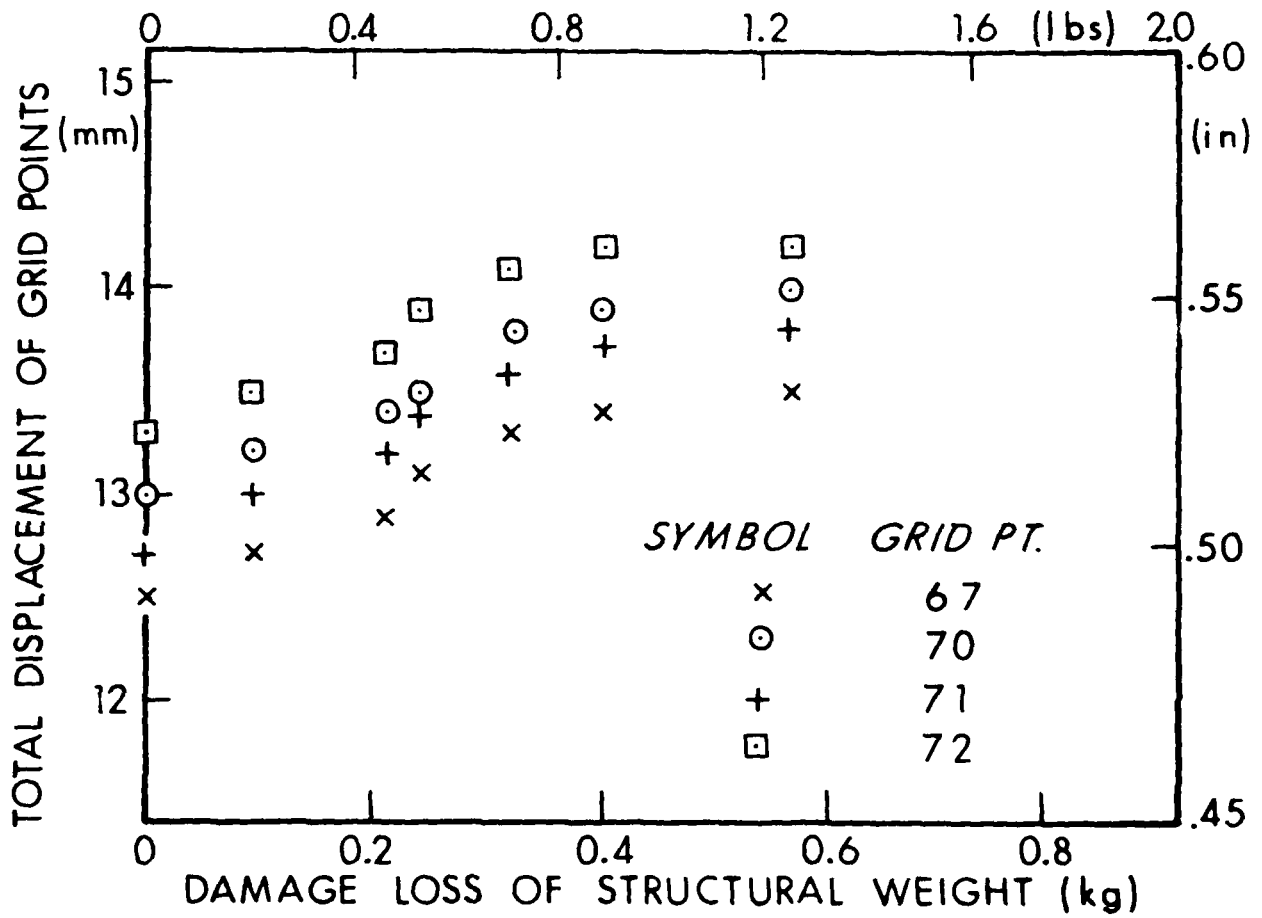

Figure 11 Displacements vs. Damage Weight Loss of Material on Left Side of Tail Boom Constructed of T300/5208 Graphite/Epoxy Composite

DISTRIBUTION LIST

No. of Copies	Organization
12	Commander Defense Technical Information Center ATTN: DDC-DDA Cameron Station Alexandria, VA 22314
1	Director Defense Advanced Research Projects Agency 1400 Wilson Boulevard Arlington, VA 22209
2	Director Weapons System Evaluation Gp Washington, DC 20305
1	HQDA (DAMA-AR-A) Washington, DC 20310
1	HQDA (DAMA-WSM) Washington, DC 20310
1	HQDA (DACS-BMZ-A) Washington, DC 20310
1	Commander US Army Concepts Analysis Agency 8120 Woodmont Avenue Bethesda, MD 20014
1	Commander US Army Materiel Development and Readiness Command ATTN: DRCDMD-ST 5001 Eisenhower Avenue Alexandria, VA 22333
2	Commander US Army Armament Research and Development Command ATTN: DRDAR-TSS Dover, NJ 07801
3	Commander US Army Armament Materiel Readiness Command ATTN: DRSAR-LEP-L, Tech Lib DRCPM-ARGADS DRSAR-RDF Rock Island, IL 61299
3	Commander US Army Aviation Research and Development Command ATTN: DRDAV-E DRDAV-DI, G. Kovacs DRCPM-ASE P. O. Box 209 St. Louis, MO 63166
1	Director US Army Air Mobility Research and Development Laboratory Ames Research Center Moffett Field, CA 94035
2	Director Applied Technology Laboratory US Army Research & Technology Development Laboratories ATTN: DAVDL-EU-VAT, Mr. Merritt; DAVDL-PP, Mr. Morrow; DAVDL-ATL-ASI and DAVDL-RM Fort Eustis, VA 23604
1	Commandant US Army Troop Support Command ATTN: Sys Anal Ofc 4300 Goodfellow Boulevard St. Louis, MO 63120
1	Commander US Army Communications Research and Development Command ATTN: DRDCO-PPA-SA Fort Monmouth, NJ 07703

DISTRIBUTION LIST

No. of Copies	Organization
1	Commander US Army Electronics Research and Development Command Technical Support Activity ATTN: DELSD-L Fort Monmouth, NJ 07703
1	Commander US Army Harry Diamond Labs ATTN: DELHD-TI 2800 Powder Mill Road Adelphi, MD 20783
7	Commander US Army Missile Research and Development Command ATTN: DRSMI-R DRSMI-CM DRSMI-RFG DRSMI-YDL DRCPM-MDEI-PA DRCPM-HA DRCPM-SHO-E Redstone Arsenal, AL 35809
1	Commander US Army Mobility Equipment Research & Development Cmd ATTN: DRDME-WC Fort Belvoir, VA 22060
3	Commander US Army Tank Automotive Research & Development Cmd ATTN: DRDTA-RWL DRDTA-UL (2 cys) Warren, MI 48090
1	Commander US Army Natick Research and Development Command ATTN: DRXRD, Dr. Seiling Natick, MA 01762
1	President US Army Aviation Test Board Fort Rucker, AL 36360
1	President US Army Infantry Board Fort Benning, GA 31905
1	Director US Army Materials and Mechanics Research Center ATTN: DRXMR-RD Watertown, MA 02172
1	Commander US Army Foreign Science and Technology Center Federal Office Building ATTN: DRXST-CB, Mr. Petrie 220 Seventh Street, NE Charlottesville, VA 22901
1	Commander US Army Logistics Center Fort Lee, VA 23801
1	Commander US Army Forces Command ATTN: AVN SEC Fort McPherson, GA 30330
1	Commander US Army TRADOC Systems Analysis Activity ATTN: ATAA-SL, Tech Lib White Sands Missile Range, NM 88002
1	Commander US Army Experimentation Command ATTN: CSCG Ln Ofc Fort Ord, CA 93941

DISTRIBUTION LIST

No. of Copies	Organization
1	Commander US Army Combined Arms Combat Developments Activity Fort Leavenworth, KS 66027
1	Commandant US Army Transportation Corps School Fort Eustis, VA 23604
1	Commander US Army Air Defense Human Research Unit ATTN: ATHRD Fort Bliss, TX 79916
1	Commandant US Army Armor School ATTN: Armor Agency Fort Knox, KY 40121
1	Commander US Army Infantry School ATTN: Infantry Agency Fort Benning, GA 31905
1	Commandant US Army Air Defense School ATTN: Air Defense Agency Fort Bliss, TX 79916
1	Commandant US Army Aviation School Fort Rucker, AL 36360
1	Commander US Army Field Artillery School ATTN: Field Artillery Agency Fort Sill, OK 73503
1	Deputy Chief of Staff for Intelligence USA-Europe ATTN: Tech Sec APO New York 09131

No. of Copies	Organization
1	Commander US Army Europe ATTN: AEAGB-PDN (S&E) APO New York 09403
1	Commander US Army Agency for Aviation Safety Fort Rucker, AL 36360
1	Commandant US Army Command and General Staff College ATTN: Archives Fort Leavenworth, KS 66027
3	Chief of Naval Operations ATTN: NOP-05 NOP-34 NOP-96C2 Department of the Navy Washington, DC 20350
5	Commander Naval Air Systems Command ATTN: AIR-5204 (2 cys) AIR-604 (3 cys) Washington, DC [illegible]
5	Commander Naval Air Systems Command ATTN: AIR-530 AIR-[illegible] AIR-[illegible] AIR-[illegible] AIR-[illegible] Washington, DC [illegible]
2	Commander Naval Sea Systems Command ATTN: Code [illegible] Code [illegible] Washington, DC [illegible]

DISTRIBUTION LIST

No. of Copies	Organization
1	Commander Naval Air Development Center ATTN: Code 2012 Warminster, PA 18974
2	Commander Naval Surface Weapons Center ATTN: Code N-23 Code N-11 Silver Spring, MD 20910
1	Commander Naval Surface Weapons Center ATTN: Code G-10 Dahlgren, VA 22448
3	Commander Naval Weapons Center ATTN: Code 318 Code 317, M. Keith Code 3831, M. Backman China Lake, CA 93555
1	Commander Naval Ammunition Depot ATTN: RD-3 Crane, IN 47522
2	Commander Naval Research Laboratory ATTN: Code 6003 Code 8443 Washington, DC 20375
3	Commandant US Marine Corps ATTN: Code AAP Code AAW-1 Code AAW-5 Washington, DC 20380
1	Director Development Center, MCDEC Quantico, VA 22134
1	HQ USAF (AFSCAGF) Washington, DC 20330
4	HQ AFSC (XRLW; SDW; SDDE DLCA) Washington, DC 20331
1	US Army Field Office HQ USAF Systems Command ATTN: SDOA Andrews AFB Washington, DC 20334
3	AFSC (SDOA/CCJ/SDAE) Andrews AFB Washington, DC 20331
1	ADTC (SES) Eglin AFB, FL 32542
1	USAFTAWC (OA) Eglin AFB, FL 32542
1	AFATL (DLYV) Eglin AFB, FL 32542
1	OSU ATTN: Mr. R. Armstrong Eglin AFB, FL 32542
1	AFWL/PG Kirtland AFB, NM 87117
1	TAC (DIO) Langley AFB, VA 23365
1	AFFDL (FES) Wright-Patterson AFB, OH 45433

DISTRIBUTION LIST

No. of Copies	Organization
1	AFAPL (SFH, R. Clodfelter) Wright-Patterson AFB, OH 45433
2	ASD/ENFTV (Mr. J. Wallick) Wright-Patterson AFB, OH 45433
1	ASD/XROT (G. B. Bennett) Wright-Patterson AFB, OH 45433
4	AFLC (MCNEA W. Dougherty; PPSC, R. Mergler; MMHM, E. Swanson; MEA, COL T. Egan) Wright-Patterson AFB, OH 45433
2	Director National Aeronautics and Space Administration Langley Research Center ATTN: MS 246E, L. Bement MS 249, J. Ward Hampton, VA 23665
1	Director Lewis Directorate US Army Air Mobility Research and Development Laboratory Lewis Research Center (Mail Stop 77-5) Cleveland, OH 44135
1	AVCO Lycoming Division ATTN: Mr. R. Cuny 550 Main Street Stratford, CT 06497
1	Bell Helicopter Textron ATTN: Mr. Niles Fischer P. O. Box 482 Fort Worth, TX 76101
1	The Boeing Company Vertrol Division ATTN. Dave Harding P. O. Box 16858 Philadelphia, PA 19142
1	Fairchild Industries Fairchild Republic Division ATTN: D. Watson Farmingdale LI, NY 11735
1	Falcon Research and Development Company ATTN: Walter Douglass 696 Fairmount Avenue Baltimore, MD 21204
1	Falcon Research and Development Company 109 Inverness Dr East Englewood, CA 80112
1	Falcon Research and Development Command ATTN: Arthur Stein One American Drive Buffalo, NY 14255
1	General Electric Company Military Engine Products Division ATTN: E. L. Richardson Building 2406A 1000 Western Avenue West Lynn, MA 01910
1	General Electric-TEMPO ATTN. E. Bryant 220 S. Main Street, Rm 206 Bel Air, MD 21014
1	Commander US Army Hughes Plant Activity ATTN: DAVHU-A 2560 Walnut Avenue Venice, CA 90291

DISTRIBUTION LIST

No. of Copies	Organization
1	LTV Aerospace Corporation Vought Systems Division ATTN: D. M. Reedy - Unit 2 [illegible] P. O. Box 5907 Dallas, TX 75222
1	Rockwell International Los Angeles Aircraft Division ATTN: R. L. Moonan Mail Code AB76 International Airport Los Angeles, CA 90009
1	United Aircraft Corporation Sikorsky Aircraft Division ATTN: [illegible] Hartz Stratford, CT 06602
1	New Mexico Institute of Mining and Technology TERA Group Socorro, NM 87801
1	[illegible] ATTN: [illegible] P. O. Drawer [illegible] San Antonio, TX [illegible]

No. of Copies	Organization
	Aberdeen Proving Ground
	Dir, USAMSAA ATTN: DRXSY-D DRXSY-MP, H. Cohen E. Bailey D. O'Neill J. McCarthy
	Cdr, USATECOM ATTN: DRSTE-TO-F Mr. Moshang
	Dir, USACSL, Bldg. E3516 ATTN: DRDAR-CLB-PA
	Dir, USAMISSD, Bldg. E3234 ATTN: DRDAR-MSE-T Mr. W. K. Wallace Ms. J. H. Walter Mr. R. J. Hartman Mr. R. E. Amos

USER EVALUATION OF REPORT

Please take a few minutes to answer the questions below; tear out this sheet, fold as indicated, staple or tape closed, and place in the mail. Your comments will provide us with information for improving future reports.

1. BRL Report Number _____

2. Does this report satisfy a need? (Comment on purpose, related project, or other area of interest for which report will be used.)

_____

_____

_____

3. How, specifically, is the report being used? (Information source, design data or procedure, management procedure, source of ideas, etc.) _____

_____

_____

4. Has the information in this report led to any quantitative savings as far as man-hours/contract dollars saved, operating costs avoided, efficiencies achieved, etc.? If so, please elaborate.

_____

_____

5. General Comments (Indicate what you think should be changed to make this report and future reports of this type more responsive to your needs, more usable, improve readability, etc.) _____

_____

_____

_____

6. If you would like to be contacted by the personnel who prepared this report to raise specific questions or discuss the topic, please fill in the following information.

Name: _____

Telephone Number: _____

Organization Address: _____

_____

_____

FOLD HERE

Director
US Army Ballistic Research Laboratory
Aberdeen Proving Ground, MD 21005

NO POSTAGE
NECESSARY
IF MAILED
IN THE
UNITED STATES

OFFICIAL BUSINESS
PENALTY FOR PRIVATE USE, $300

BUSINESS REPLY MAIL
FIRST CLASS PERMIT NO 12062 WASHINGTON, DC

POSTAGE WILL BE PAID BY DEPARTMENT OF THE ARMY

Director
US Army Ballistic Research Laboratory
ATTN: DRDAR-TSB
Aberdeen Proving Ground, MD 21005

FOLD HERE

DATE
ILME