AD-A096 852 CIVIL ENGINEERING LAB (NAVY) PORT HUENEME CA F/G 13/10
LASH TRANSPORTED ANCHOR FOR A TANKER MOORING.(U)
SEP 80 J M ATTURIO
UNCLASSIFIED CEL-TN-1587 NL

1 OF 1
AD
A096852

END
DATE
FILMED
4-81
DTIC

LEVEL II

(12)

Technical Note

CEL

TN [redacted]N-1587

title: LASH TRANSPORTED ANCHOR FOR A TANKER MOORING.

DTIC ELECTE MAR 26 1981

author: J. M. Atturio

date: Sep[redacted]980

sponsor: Naval Facilities Engineering Command

program nos: YF60.536.091.01.N11A

CIVIL ENGINEERING LABORATORY
NAVAL CONSTRUCTION BATTALION CENTER
Port Hueneme, California 93043

Approved for public release; distribution unlimited.

AD A096852

DTIC FILE COPY

81 3 26 008

CONVERSION FACTORS, U.S. CUSTOMARY TO SI

U.S. Customary units of measurement used in this report can be converted to metric (SI) units as follows:

Multiply	By	To Obtain
feet	0.3048	meters
pounds (force)	4.45	newtons
pounds (force) per square inch	6,894.757	pascals
pounds (force) per square foot	47.88026	pascals
knots	0.5144	meters per second
feet per second	0.3048	meters per second
degrees (angle)	0.01745329	radians

Unclassified

SECURITY CLASSIFICATION OF THIS PAGE (When Data Entered)

REPORT DOCUMENTATION PAGE	READ INSTRUCTIONS BEFORE COMPLETING FORM
1. REPORT NUMBER TN-1587	2. GOVT ACCESSION NO. AD-A096 852 DN787092	3. RECIPIENT'S CATALOG NUMBER
4. TITLE (and Subtitle) LASH TRANSPORTED ANCHOR FOR A TANKER MOORING	5. TYPE OF REPORT & PERIOD COVERED Interim; Oct 79 – Jul 80 6. PERFORMING ORG. REPORT NUMBER
7. AUTHOR(s) J. M. Atturio	8. CONTRACT OR GRANT NUMBER(s)
9. PERFORMING ORGANIZATION NAME AND ADDRESS CIVIL ENGINEERING LABORATORY Naval Construction Battalion Center Port Hueneme, California 93043	10. PROGRAM ELEMENT, PROJECT, TASK AREA & WORK UNIT NUMBERS 62760N; YF60.536.091.01.N11A
11. CONTROLLING OFFICE NAME AND ADDRESS Naval Facilities Engineering Command Alexandria, Virginia 22332	12. REPORT DATE September 1980 13. NUMBER OF PAGES 30
14. MONITORING AGENCY NAME & ADDRESS(if different from Controlling Office)	15. SECURITY CLASS (of this report) Unclassified 15a. DECLASSIFICATION DOWNGRADING SCHEDULE

16. DISTRIBUTION STATEMENT (of this Report)

Approved for public release; distribution unlimited.

17. DISTRIBUTION STATEMENT (of the abstract entered in Block 20, if different from Report)

18. SUPPLEMENTARY NOTES

19. KEY WORDS (Continue on reverse side if necessary and identify by block number)

Bulk fuel system, SALM, deadweight anchor, LASH, bargeship

20. ABSTRACT (Continue on reverse side if necessary and identify by block number)

The Navy/Marine Corps Advanced Base Offshore Bulk Fuel System (OBFS) includes a tanker terminal facility. The feasibility of transporting and installing a large gravity anchor for a proposed Single Anchor Leg Mooring (SALM) for the terminal facility is investigated. It was assumed that advanced base, amphibious and LASH (lighter aboard ship) assets are available for transporting and installing the anchor. A maximum horizontal force of 222 kips (from model tests) on a catenary moored 50,000-dwt tanker in 65 ft water depth with a 4-knot

continued

DD FORM 1 JAN 73 1473 EDITION OF 1 NOV 65 IS OBSOLETE

Unclassified

SECURITY CLASSIFICATION OF THIS PAGE (When Data Entered)

20. Continued

current and 8-ft (significant height) seas was used to determine the required deadweight anchor size and weight. For sediment seafloors the anchor would measure 61 ft x 62 ft x 10.5 ft and weight 1,000 tons. An anchor for a rock seafloor would be approximately twice this size and weight. Either anchor is too large and heavy to be lifted as a single unit by the 500-ton capacity LASH gantry crane. Instead the anchor is transported and off-loaded as two (four for rock seafloors) standard 500-ton LASH barge-sized modules. The floating modules are joined after offloading, towed to the appropriate location and sunk to provide the required anchorage. SALM anchor installation could probably be accomplished in one day, and terminal installation completed in less than 7 days. A comparable catenary-moored terminal facility is estimated to require an installation time of about 14 days. A Single Anchor Leg Mooring for the OBFS appears to be both feasible and practical. The primary development items are the hardware and techniques for mating the heavy anchor modules at sea.

Library Card

Civil Engineering Laboratory
LASH TRANSPORTED ANCHOR FOR A TANKER MOORING
by J. M. Atturio
TN-1587 30 pp illus September 1980 Unclassified

1. Bulk fuel system 2. Deadweight anchor I. YF60.536.091.01.N11A

The Navy/Marine Corps Advanced Base Offshore Bulk Fuel System (OBFS) includes a tanker terminal facility. The feasibility of transporting and installing a large gravity anchor for a proposed Single Anchor Leg Mooring (SALM) for the terminal facility is investigated. It was assumed that advanced base, amphibious and LASH (lighter aboard ship) assets are available for transporting and installing the anchor. A maximum horizontal force of 222 kips (from model tests) on a catenary moored 50,000-dwt tanker in 65 ft water depth with a 4-knot current and 8-ft (significant height) seas was used to determine the required deadweight anchor size and weight. For sediment seafloors the anchor would measure 61 ft x 62 ft x 10.5 ft and weigh 1,000 tons. An anchor for a rock sea-floor would be approximately twice this size and weight. Either anchor is too large and heavy to be lifted as a single unit by the 500-ton capacity LASH gantry crane. Instead the anchor is transported and offloaded as two (four for rock seafloors) standard 500-ton LASH barge-sized modules. The floating modules are joined after offloading, towed to the appropriate location and sunk to provide the required anchorage. SALM anchor installation could probably be accomplished in one day, and terminal installation completed in less than 7 days. A comparable catenary-moored terminal facility is estimated to required an installation time of about 14 days.

CONTENTS

	Page
INTRODUCTION	1
BACKGROUND	1
ANCHOR LOADING	2
SEAFLOOR CHARACTERISTICS	3
TRANSPORT SHIP CAPABILITIES	4
ANCHOR CHARACTERISTICS AND INSTALLATION TECHNIQUES	6
Resistance Mechanisms	6
Anchor Characteristics	7
Anchor Placement	8
DISCUSSION	9
CONCLUSIONS	10
RECOMMENDATIONS	11
REFERENCES	11

Accession For

A

INTRODUCTION

The Offshore Bulk Fuel System (OBFS) is a system for delivering large quantities of fuel to a combined Navy and Marine Corps contingency force over an exposed beach-head. The OBFS includes an Amphibious Tanker Terminal Facility (ATTF) consisting of a tanker mooring, pipelines, and pumping equipment. A proposed Single Anchor Leg Mooring (SALM) could minimize ATTF installation time and get fuel to the beach in roughly half the time required for the present system using a Catenary Anchor Leg Mooring (CALM).

This report describes the required size and weight of SALM anchors and addresses the feasibility of transporting, offloading, and installing them with available amphibious, advanced base, and U.S. Flag LASH (Lighter Aboard Ship) assets. The work is sponsored by the Naval Facilities Engineering Command as part of the program on advanced base mobility.

BACKGROUND

The ATTF Catenary Anchor Leg Mooring (CALM) consists of the components shown in Figure 1. The CALM provides adequate mooring restraint and uses hardware which may be handled with existing amphibious and advanced base assets. Several undesirable features of the CALM are: the time-consuming installation of four chain mooring legs and four propellant embedded anchors (or four conventional anchors); the necessity for both buoy-to-tanker and buoy-to-pipeline manifold fuel transfer hoses; high vulnerability of the multi-product distribution unit (MPDU) on the buoy (see Figure 1); and abrasion of the anchor cables (or chain) on and/or in the seafloor.

The Single Anchor Leg Mooring (SALM), Figure 2, offers some relief from these problems. It uses a single gravity anchor which doubles as the MPDU and pipeline end manifold. There are no pipe manifolds on the buoy. The gravity anchor envisioned is a barge-shaped box, either towed or carried to the site, and flooded to provide the SALM anchorage. Thus, anchor cable abrasion on the seafloor, multiple anchor installation, and under-buoy hoses are eliminated. The SALM configuration shown in Figure 2 is an IMODCO design (Ref 1). The anchor was sized to resist loads on a 70,000-dwt tanker moored in 65 ft of water with a 30-kt wind, 4-kt current and a fully arisen sea with a significant wave height of 12 ft. (Since the IMODCO report was written, OBFS loading requirements have been reduced significantly as described below.) Overall dimensions and submerged weight of this IMODCO barge-anchor are 100 ft x 50 ft x 14 ft and 3,300 kips*. If the barge is self-propelled or towed in the open sea, it would have to be longer to improve its seaworthiness. The

*1 kip = 1,000 pounds.

undersirable feature of the anchor is that, because of its size, it requires special assets to transport and install. It must be towed, self-propelled or carried in the well deck of an LSD-type ship (which is probably not available). Other amphibious or LASH ships are not equipped to handle or install the mooring base.

A previous CEL report (Ref 2) investigated the possiblity of reducing the required weight and size of the gravity anchor by supplementing it with propellant embedded anchors. That report concluded that composite anchors could reduce required weight by as much as 90%. However, the resulting composite deadweight-propellant embedded anchor would require substantial development and result in an involved installation procedure. The increased complexity is a severe detractor from the basic advantage of the SALM which is fast installation. The report also pointed out that even the lightest composite anchor employing eight propellant anchors would weigh about 400 kips. The most available assets capable of handling this weight are LASH vessels or LSD-type ships. In other words, the composite anchor would not remove the basic objection to the simple gravity base.

The recent reduction (Ref 3) in the required anchor holding capacity for the ATTF and the possibility of using LASH assets has led to this re-evaluation of the SALM.

ANCHOR LOADING

Based on data from final model tests, a survey of worldwide refined product tanker distribution, and a review of realistic operational environmental conditions (Ref 3) the ATTF mooring is now designed to restrain a 50,000-dwt tanker in a fully developed sea with a significant wave height (Pierson-Moskowitz spectrum) of 8 ft, current velocity of 4 kts and wind velocity of 30 kts. Although the OBFS may be installed in water depths ranging from 65 to 200 ft, highest loads occur at the shallower depth (Ref 4). Model tests of the CALM showed that at the 65-ft depth maximum hawser tension for the 50,000-dwt tanker was 245 kips. The maximum force occurs at a hawser angle to the horizontal of 25 degrees; the maximum horizontal load component is 222 kips.

For this analysis, the forces derived from CALM model tests were applied directly to the SALM. Figure 3 is a sketch of the estimated SALM loading conditions. The forces at the anchor are 222 kips horizontally and 340.5 kips vertically for a total force at the anchor of 406.5 kips at an angle of about 57 degrees to the horizontal. These forces are about one-half those predicted originally for the 70,000-dwt tanker in 12-ft significant wave height sea conditions.

The large size of the SALM anchor and the relatively shallow water depth contribute to a significant force on the anchor itself from surface waves. The wave inertia force component and the frictional drag component occur 90 degrees out of phase. Since the drag component is relatively small, it was neglected. The inertia force is a function of the anchor displaced volume:

$$F_i = C_m \rho V A_x$$

where F_i = inertia force (F)

C_m = inertia coefficient, 1.7 assumed

ρ = density of sea water (M/L^3)

V = displaced volume of the anchor (L^3)

A_x = horizontal acceleration of water particles due to the design wave (F/T^2)

In Figure 3, the inertia force is shown acting at the center of the anchor's displaced volume. Anchors described here were sized to resist 2.0 times the maximum load estimated from model tests plus the inertia force acting on the anchor. Design forces are 680 kips vertically and 540-640 kips horizontally.*

SEAFLOOR CHARACTERISTICS

Seafloor types which might be encountered at an OBFS location could vary from a soft cohesive material to hard rock or coral. Although the ideal anchor would function in the full range of possible seafloors, there is no single, reasonably sized anchor today which has that capability. The practical solution is to specify an anchor which will function adequately in the widest possible range of seafloors. Figure 4 is an estimate of the relative frequency of occurrence of a range of surficial seafloor compositions found on the inner continental shelf. The figure was produced from nautical chart data generated by Hayes (Ref 5) who attempted to correlate shelf composition with the climate of the adjacent coastal area. The figure shows that 84 percent of the inner shelf surface area is sand or mud. Another 13 percent is coral, shell or gravel and roughly 3 percent is rock. For this analysis, engineering properties for the design of deadweight anchors were assigned only to the relatively prevalent sand and mud seafloors. The properties of the other seafloor types are difficult to generalize quantitatively. It is assumed that a deadweight in soft coral or gravel behaves much as it does in sand. The primary assumption for rock is that sliding friction of a deadweight anchor on rock can be estimated by assuming a coefficient of friction between the anchor and rock of 0.3, and using the same relationships used for sand. The cohesionless (sand) and cohesive (silty clay) seafloor assumed for design are described below.

Sand

A typical competent sandy seafloor was assumed:

Submerged (saturated) unit weight = 60 pcf
Friction angle = 35 degrees

*The horizontal force varies with anchor size because of the inertia force term. An anchor made of denser material would have less displaced volume and experience less wave inertia force than an anchor of less dense material.

Clay

The assumed undrained shear strength versus depth for the cohesive seafloor is shown in Figure 5 (Ref 6). A submerged unit weight of 45 pcf and a sensitivity (undisturbed strength divided by remolded strength) of 2.0 were assumed.

TRANSPORT SHIP CAPABILITIES

The LASH system consists of 20 U.S. Flag ships and 4 foreign flag carriers (Ref 7). In a national emergency, the U.S. LASH fleet could be pressed into service as transporters of advanced base and OBFS material. The ships are capable of speeds exceeding 20 kts and are able to offload barge lighters in the open sea. LASH barges measure approximately 61.5-ft x 32-ft x 13-ft high and have a maximum gross weight of 1,000 kips. The LASH gantry (also called the lighter lift crane) travels fore and aft along the ship picking up barges from holds or the weather deck and lowering them at the ship's stern. Barges are lifted with their short axis parallel to the ship's centerline (Figure 6). A single LASH ship may carry from 40 to 80 barges depending on the particular ship (Figure 7a). Barges are both fitted into cargo holds which measure 63 ft 11 in. x 34 ft 7 in. and stacked on the weather deck. In port, barges are usually carried fully loaded and are stacked two high on the weather deck. At sea, the upper barge is carried empty. Barges in holds are stacked 2-to-4 high.

The SEABEE ship, Figure 7b, is another barge-carrying ship (total of three ships) which could be used to transport a large deadweight. One additional bargeship on the drawing boards is the TRIMARINER, Figure 7c. It is an ocean-going ship which uses a wet well (like a drydock) to offload cargo. SEABEE barges measure 90-ft x 76 ft x 16 ft and have a gross weight of about 2,000 kips. The SEABEE ship lowers two barges at once on an elevator, and therefore, its lift capability is four times that of a LASH vessel. The proposed TRIMARINER would load barges measuring 200 ft x 76 ft x 15 ft. Since the number of SEABEE and TRIMARINER vessels (if they are constructed) is expected to remain relatively small compared to LASH assets for the foreseeable future, they were not considered in this report. However, their capability for transporting and discharging heavy cargo should be kept in mind in the event they become available for the OBFS mission.

The unmodified LASH lighter lift crane is unable to lift many advanced base components because they differ in size from the standard LASH barge. The clearance (measured parallel to the ship's centerline) between the gantry aft lift points and the ship's transom (Figure 8) is about 32 ft. Several interim fixes which adapt the lighter crane for lifting outsized advanced base components have been proposed, and limited testing has been done using a special landing craft lift beam (Ref 7). Nine of the 20 existing LASH ships have been modified to permit a lift using only the two aft sockets of the crane. Modifications include features to override stop switches on the gantry allowing it to travel farther aft, and switches to override eccentric load limit switches on the crane. The proposed final solution to the problem of lifting outsized loads is a cantilever lift frame (Figures 8 and 9). Present plans

call for the cantilever lift frame to be carried aboard nine of the larger LASH ships (designated C-9 ships) with the required modifications. If needed, the remaining 11 ships could be modified to accept the lift frame.

The cantilever lift frame allows relatively light outsized loads like causeway sections (140 kips) to be lifted with the lighter crane. As objects become larger in the fore-and-aft (relative to the ship) dimension, the load becomes concentrated on the gantry's sternmost lift points and usable crane capacity is reduced. For even larger loads, unweighting of the crane's forward lift points begins to occur, and eventually upward loads are applied to the forward lift points. For loads having the fore-and-aft dimension greater than about 80 ft this uplift controls crane capacity. Figure 10 is a plot of lift capacity versus object size (outsized loads) for the Morgan cranes fitted on six of the C-9 LASH ships. Although not presently configured to lift loads narrower than 50 ft (dashed line in Figure 10), minor modifications to the cantilever lift frame could be made to permit such lifts. The solid line in Figure 10 shows estimated load capacity for object sizes from 50-to-80 feet. The curve shows that crane capacity decreases rapidly as object size increases; for example, capacity is reduced 50 percent for 56-ft loads. The lower (dotted) portion of the curve reflects the upward force on the lift points controlling crane capacity. Data for Figure 10 was developed by summing forces and moments for the lift system. For numerical examples of the calculation procedure followed, refer to Reference 8.

LASH barges are routinely offloaded at only a few open ocean locations. The LASH lighter lift crane motion compensation system has the capability to accommodate 8-ft vertical motions at periods of 7 seconds and 4-ft vertical motions at periods of 5 seconds or more. LASH barge handling tests conducted at Coronado, CA (Ref 9) indicated that standard construction battalion warping tugs (fitted with two 290-hp outboard motors) are well suited to handling loaded or unloaded LASH barges in mild sea conditions. Shumaker (Ref 10) observed LASH barges being offloaded in state 4 seas. He noted the importance of the gantry motion compensation feature and observed that the critical phase of the off-loading operation occurs just as the barge is disconnected (or connected). To accomplish the unmating operation, winches aboard the ship draw the barge in snugly against the ship transom; alternately, a tug is used to push the barge against the ship. Shumaker states that the latter method is faster and more efficient. The acquiring tug should be equipped with two deck winches for handling the barge and should be well fendered. Offloading time at sea for standard barges averages about 25 minutes (Ref 8).

As configured, the cantilever lift frame, or other system using flexible cables, removes the crane's motion compensation feature. It is difficult to assess the significance of this lack of motion compensation since discharging outsized loads at sea has not been done. It does appear feasible to develop a truss-like replacement for the cables so that the gantry's motion compensation feature would not be disabled. Truss-development costs would probably be comparable to development of the cantilever lift frame itself.

ANCHOR CHARACTERISTICS AND INSTALLATION TECHNIQUES

Resistance Mechanisms

The resistance of a deadweight anchor to sliding can be idealized for an anchor on a purely cohesive (clay) or a purely cohesionless (sand) seafloor as follows. On a sand seafloor, anchor resistance to lateral motion is caused by sand grains sliding up and over one another. This action results in overall frictional behavior; increasing the force (weight) normal to the direction of impending lateral motion increases lateral resistance according to:

$$R_L = (W_s - F_u) \tan \phi \qquad (1)$$

where R_L = resistance to sliding (F)

W_s = anchor submerged weight (F)

ϕ = soil friction angle

F_u = uplift force at the anchor (F)

Equation 1 shows that to increase lateral resistance the anchor weight must be increased.

For cohesive seafloors under short-term loading, water trapped within the soil leads to a different idealization of lateral holding capacity since soil pore pressure prevents large frictional forces from developing. In cohesive soil, lateral resistance may be calculated according to:

$$R_L = s_u A \qquad (2)$$

where s_u = soil undrained shear strength at a given depth $[F/L^2]$

A = the anchor area contacting the soil $[L^2]$

As shown, the anchor area does not enter directly into the lateral resistance on sand [Equation 1] and the anchor weight does not enter into the lateral resistance on clay [Equation 2]. However, both factors do enter calculations of anchor resistance to overturning. In practice, the strength of a normally consolidated clay at the surface is very small, but increases with depth. Shear keys which penetrate into the deeper stronger soil are typically fitted to the bottom of an anchor for clay to effectively increase the value of s_u. Weight must be added to the anchor to drive these shear keys into the stronger soil below the surface. A description of the basic steps and assumptions made in sizing the anchors in this analysis may be found in Reference 11. Although bearing failure was not explicitly considered in sizing the anchors, designs were specified such that the resultant load on the soil falls within the middle third of the anchor base, limiting the possibility of bearing failure.

The anchors described here are sized to resist omni-directional lateral load on sand or cohesive seafloors. By limiting load direction or soil type, anchor size and weight can be reduced.

Sliding on a rock seafloor is assumed to be governed by simple frictional behavior. A coefficient of friction of about 0.3 between anchor and rock is expected; this value is substituted for the tan ϕ term in Equation 1.

Anchor Characteristics

Three anchor designs are shown in Figure 11. Each anchor uses a different LASH vessel deployment scheme, as described later in this section. All anchors employ shear keys which penetrate the seafloor to increase the anchor's lateral holding capacity on cohesive seafloors and limit scouring on cohesionless seafloors. Anchors with shear keys on a cohesive seafloor may resist several times the load of a similar anchor without shear keys because the keys penetrate to a depth where the soil strength is greater than that at the surface. The particular dimensions chosen for the anchors in Figure 11 reflect ship transporting and off-loading limitations as well as holding capacity requirements. The anchors are of steel construction to minimize their profile on the seafloor and, thereby, limit wave force on the anchor itself. All anchors are designed to float on the water surface until flooded. The anchors are comprised of three basic parts.

The first part is a grid-like arrangement of shear keys which penetrate fully into cohesive seafloors and partially into sand seafloors under the weight of the anchor alone. An additional embedding force contributed by the anchor's downward velocity as it approaches the seafloor was not considered.

The middle section of the anchor consists of the primary weighting material. In the examples here this material is a section of steel plate.

The upper section of the anchor is a tank-like structure which provides buoyancy when the anchor is on the water surface. The connection between the anchor and the mooring chain may be located on or in this upper anchor section. Should overturning of the anchor be critical, this connection could be located just above the shear key grid. This would necessitate removing a cone-like segment of the upper buoyant tank section to provide clearance for the mooring chain. The upper anchor section also contains the integral MPDU.

The anchor is offloaded by a LASH vessel and floated on the water surface. Both the volume within the shear key grid and the upper void area provide the required anchor buoyancy, with a freeboard of about one foot.

The anchor shown in Figure 11a measures 61 ft x 35 ft x 8.5 ft and weighs 928 kips (807-kips submerged weight). It is designed to be deployed in a single direct crane lift. This size and weight represent the approximate lift limit of a LASH vessel with the gantry aft movement limit switch disabled. The anchor's holding capacity is 327-kips horizontally and 340-kips vertically. Cutting edges would penetrate the full 3.5 ft on a soft cohesive seafloor, and about 2.5 ft on a sandy seafloor. The provided holding capacity does not allow for any safety factor. Augmenting the anchor with four propellant-embedded anchors, as suggested in reference 2, could provide the required factor of safety.

The anchor shown in Figure 11b measures 50 ft x 60 ft x 12.5 ft and weighs about 1,840 kips (1,600 kips submerged). Its 6.5 ft long cutting edges penetrate fully into cohesive soil and penetrate about 4 ft into sand. The anchor's lateral capacity is 655 kips and its vertical capacity is roughly 680 kips. Multiple lifts with the cantilever lift frame without motion compensation are required to offload the anchor. The anchor is assembled by nesting approximately three modules into a large floating module (Figure 12a). The nesting and assembling operation is completed in the relatively protected area at the stern of the LASH vessel. Lifting and fitting of each module is estimated to take about one hour. Preparatory rigging of the cantilever lift frame would take several hours. Total time to offload the anchor is estimated at eight hours.

The anchor shown in Figure 11c measures 61 ft x 62 ft x 10.5 ft and weighs about 2,000 kips (1,740 kips submerged weight). The cutting edges penetrate the full 4.5 ft into cohesive soil but only about 2.5 ft into sand. The anchor has lateral and vertical capacities of 660 kips and 680 kips respectively. Since the modules are the same size and weight as loaded LASH barges, they could be stacked in lighter cells or on deck just as LASH barges are stored. The anchor is assembled from two modules lifted individually by the unmodified lighter crane (Figure 12b). Since no special rigging or lift frame is required, the offloading time should be about the same as for a LASH barge -- 30 minutes for each module. The time required for the subsequent mating of the two modules is difficult to estimate due to probable weather sensitivity, but would probably be at least one hour. Since the cantilever lift frame is not required for the lift, the crane's motion compensation is available for lowering the anchor modules.

The anchor weights and sizes described above are applicable only to flat* seafloors. Anchor lateral capacity on sloping seafloors can be significantly less in the downslope direction.

Anchor Placement

Each of the anchors shown in Figure 11 is floated to the designated anchor area after assembly. Two alternatives for placing the anchor are free fall and buoyancy-assisted controlled lowering. In the first, sinking is accomplished by venting air trapped within the cutting edges. Air trapped in the upper tank is vented and water allowed to enter to equalize pressure on the tank bulkheads as the anchor sinks. If desired, parts of the upper section could be designed to withstand all or part of the pressure difference, providing the capability for reducing anchor free-fall velocity.

The second method requires a motion-compensated lowering device. If motion compensation equipment is installed on the advanced base container offloading crane, it could be used to lower a partially ballasted anchor.

The anchors in Figure 11 are sized to resist design loads on the assumed sand and mud seafloors. Performance on soft coral is assumed to be approximately the same as on sand. Since the usable friction capacity of an anchor on rock would be about one half that on sand, an anchor for

*A 2 percent slope reduces anchor lateral capacity about 4 percent.

rock would have to be about twice as heavy as the anchors described above. Adding two modules like the ones in Figure 11c (total of four) is one method for providing the necessary weight.

DISCUSSION

With weather contingencies included, the ATTF employing a CALM will be operational about 14 days after installation begins (Ref 12). SALM installation, on the other hand, would require about one day and could be completed as the pipeline and associated equipment were being installed. Total installation time for the pipeline (with weather contingencies) is about seven days. Therefore, an operating ATTF using a SALM could be operational in roughly half the time projected for the CALM equipped OBFS. As this would make the pipeline critical, improvements in its installation would be sought. For example, the use of ship-based pipe or heavy hose installation might provide substantial further reductions in OBFS installation time.

The assumption that load on the SALM can be approximated by model tests on the CALM is a rough approximation but adequate for this initial analysis. If a SALM for the ATTF is pursued further, a more careful determination of mooring loads, possibly including additional model tests, is needed.

The anchor configurations presented in Figures 11b and 11c will function adequately for the ATTF on all seafloor materials except hard coral or rock. For hard coral or rock, anchor weight must be increased to obtain the required holding capacity. The additional weight may be obtained by extending the side-by-side approach -- add more modules until the required weight and holding capacity is obtained.

Sizes and weights given are for anchors located on a flat seafloor. A sloping seafloor substantially reduces anchor resistance to sliding. However, other indirect constraints on seafloor slope imposed by the advanced base mission (for example, beach trafficability) significantly limit the possibility of operations on seafloors sloping more than about 2 percent.

Two methods for assembling a large anchor by connecting smaller modules were suggested to demonstrate the concept of a building block anchor. Other methods for "building" anchors at the water surface or even at the seafloor are possible.

Of the three anchors described, the one assembled from two standard-sized LASH modules is best in terms of transportability and practicality. Using LASH transport vessels assures rapid delivery of the anchor system and reliable, efficient offloading. The modular anchor permits storage above or below decks on any LASH vessel. The full 1,000-kip capability of the gantry, including motion compensation, is used. The key development required for the anchor, mating large floating structures at sea, is a reasonable extension of present military and commercial offshore capability.

The nested anchor concept, which requires rigging of the cantilever lift frame, is less desirable. Storage of the outsized modules aboard the LASH vessel would have to be topside since the modules would not fit into the LASH barge cells. The offloading operation would require transferring military stevedores to the LASH vessel to assist in rigging

the load and the cantilever lift frame. Therefore, using outsized anchor modules would mean fewer ships would be capable of performing the offloading task. The primary advantage of the nested anchor is that assembly is accomplished in the relatively protected LASH stern well.

It is not possible, with a single lift by a LASH vessel, to offload a deadweight large enough to resist ATTF environmental loads with an appropriate factor of safety. Although it is possible to reduce anchor size and weight by adding propellant embedded anchors, such a system would require extensive development and would destroy the basic attractiveness of the SALM: which is simplicity and speed of installation. Also, a composite deadweight-propellant embedded anchor would probably not be handleable with existing advanced base and amphibious assets -- LASH transport and offloading would still be required.

CONCLUSIONS

1. A single anchor leg mooring has the potential to reduce OBFS installation time by about 50 percent. The pipeline installation, not the mooring installation, would then become the limiting factor in determining the time required to obtain an operational ATTF.

2. A suitable ATTF SALM anchor for mud, sand, soft coral and gravel would measure about 61 ft x 62 ft x 10.5 ft overall and weigh 2,000 kips. The anchor base would be fitted with a grid-like arrangement of shear keys approximately 4.5 ft in height. Two 1,000 kip anchor modules would be offloaded by a LASH vessel, joined, floated to the designated anchoring site, and sunk. Existing PHIBCB warping tugs have the capability for handling the proposed anchor. However, a suitable method for joining the LASH barge-sized anchor modules at sea would have to be developed.

3. Transporting, offloading, joining and installing a suitable deadweight type anchor using LASH and Naval Construction Force assets appears feasible and practical. Precedents for such operations have already been established by LASH ships (discharging loaded barges in the open sea), the PHIBCB's (joining loaded causeways at sea) and offshore oil companies (mating jacket type structures at sea).

4. A suitable anchor for rock would be twice as heavy (4,000 kips) as the anchor for sediment seafloors. It could be composed of 4 x 1,000 kip LASH barge-sized modules.

5. The SALM anchor described in (2) could be transported and offloaded by any of the 20 LASH vessels using standard LASH barge procedures.

6. Transporting and offloading outsized anchor components (with the proposed cantilever lift frame) appears feasible, but not as attractive as using standard-sized modules and the unmodified LASH gantry crane.

7. The potential benefits of this type of the SALM merit further consideration in amphibious hardware development and support ship allocation.

RECOMMENDATIONS

1. Determine the relative merits of the SALM versus the CALM on seafloors likely to be encountered by the OBFS.

2. Assess the availability of LASH vessels to transport the anchor modules in times of national emergency.

3. If the relative merit of the SALM is high, and there is a strong indication that LASH vessels will be available when needed, initiate preliminary design of a modular gravity anchor base SALM for the ATTF and development of the capability for joining the anchor modules at sea.

REFERENCES

1. Civil Engineering Laboratory. Barge/SALM study: Adaptation feasibility study for the IMODCO barge/SALM SPM concept for use as a U.S. Navy amphibious logistical support buoy, by R. Scalese. Los Angeles, Calif., IMODCO, Feb 1979. (IMODCO Project P94-30) (Contract N00123-78-C-0489)

2. _____. Technical Memorandum M-42-79-4: Composite deadweight-propellant embedded anchors: Application to the offshore bulk fuel system mooring, by J. M. Atturio. Port Hueneme, Calif., Jun 1979.

3. _____. Technical Memorandum M-44-79-10: Recommended design parameters for the offshore bulk fuel system, by N. D. Albertsen. Port Hueneme, Calif., Jul 1979.

4. _____. U. S. Navy single point mooring fuel buoy: Final design including pertinent calculations, by J. Lorentz. Los Angeles, Calif., IMODCO, Sep 1979. (IMODCO Project P-94) (Contract N00123-78-C-0489)

5. M. O. Hayes. "Relationship between coastal climate and bottom sediment types on the inner continental shelf," Marine Geology, vol 5, 1967, pp 111-132.

6. Civil Engineering Laboratory. Technical Memorandum M-42-76-1: State-of-the-art in high capacity deep water anchor systems, by P. J. Valent, R. J. Taylor, H. J. Lee, and R. D. Rail. Port Hueneme, Calif., Jan 1976.

7. Military Traffic Management Command Pamphlet No. MTMC-55-3 and Military Sealift Command Pamphlet No. MSC-3120: Transportation and travel barge-ship systems and description, guidance and transportation of military cargo, Washington, D.C., Jun 1977.

8. David W. Taylor Naval Ship Research and Development Center. Contract Report Task No. FD75: LASH amphibious post-assault support (LAPS) mission -- Phase I, conceptual design analysis. J. J. Henry, Co., Inc. (Contract N00600-72-D-0308)

9. Civil Engineering Laboratory. Technical Note N-1348: *Bargeships in amphibious logistics -- Coronado LASH barge tests*, by B. R. Karrh, Port Hueneme, Calif., Jul 1974.

10. G. L. Shumaker. "Bargeships in a seaway," Naval Engineers Journal, vol 89, no. 6, Dec 1977, pp 63-66.

11. Civil Engineering Laboratory. Technical Note N-1473: OTEC single anchor holding capacities in typical deep sea sediment, by P. J. Valent, R. J. Taylor, J. M. Atturio, and R. M. Beard. Port Hueneme, Calif., Jan 1976.

12. Navy Decision Coordinating Paper NDCP-YO242-AW: "Offshore mooring/fuel transfer storage system," May 1980.

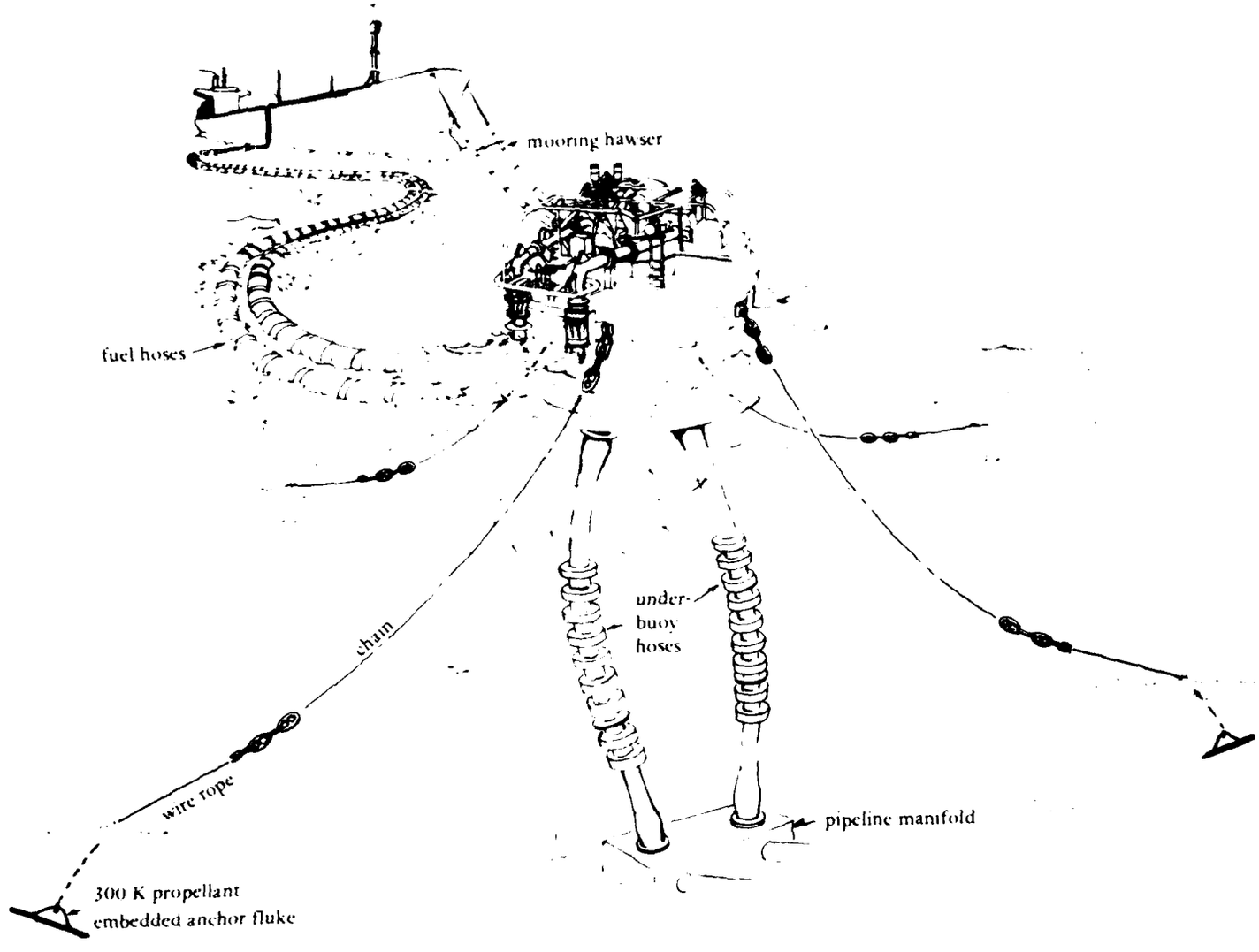

Figure 1. The Amphibious Tanker Terminal Facility (ATTF) catenary anchor leg mooring.

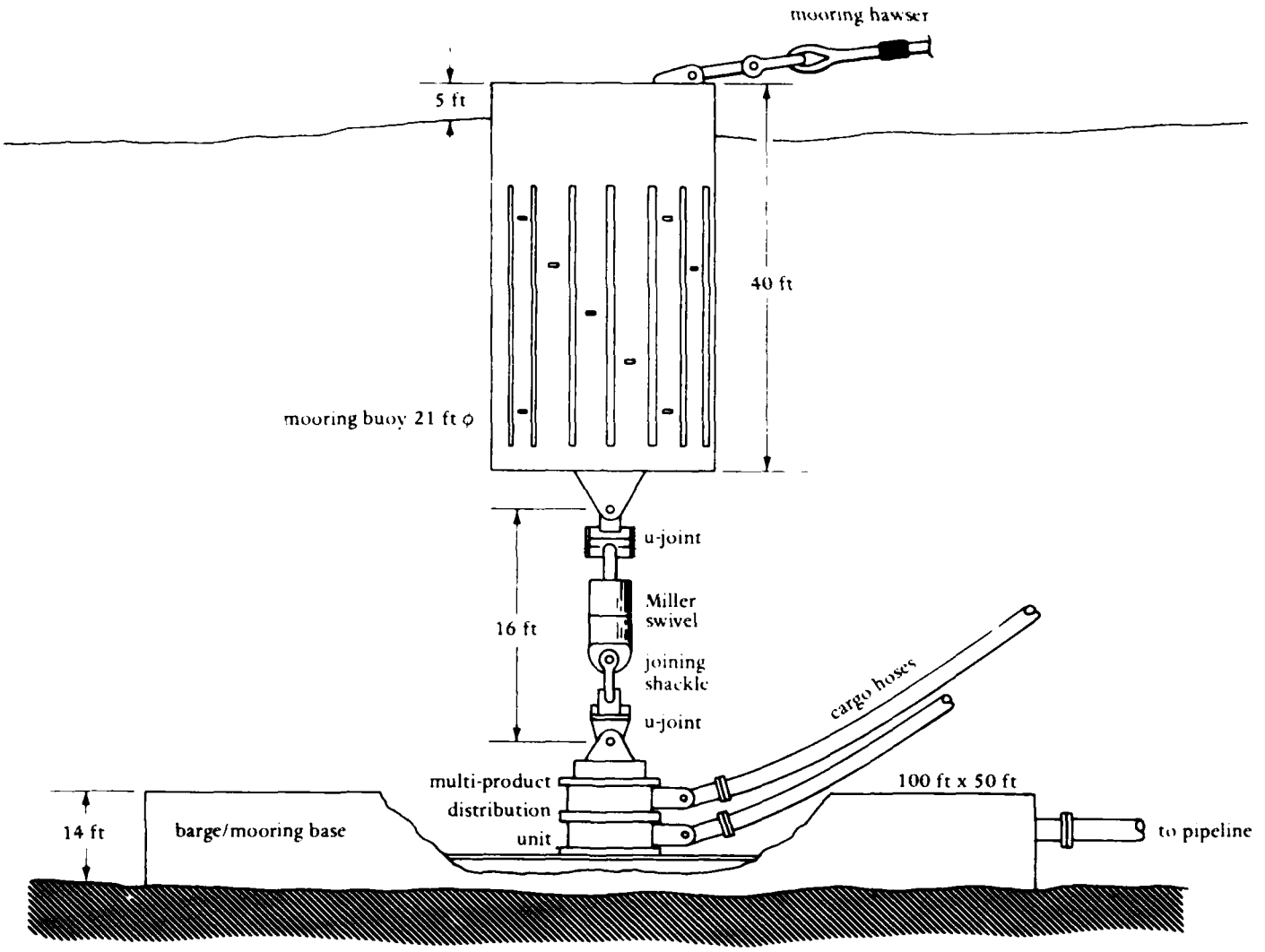

Figure 2. Single anchor leg mooring system for 65 ft water depth (from Ref. 1).

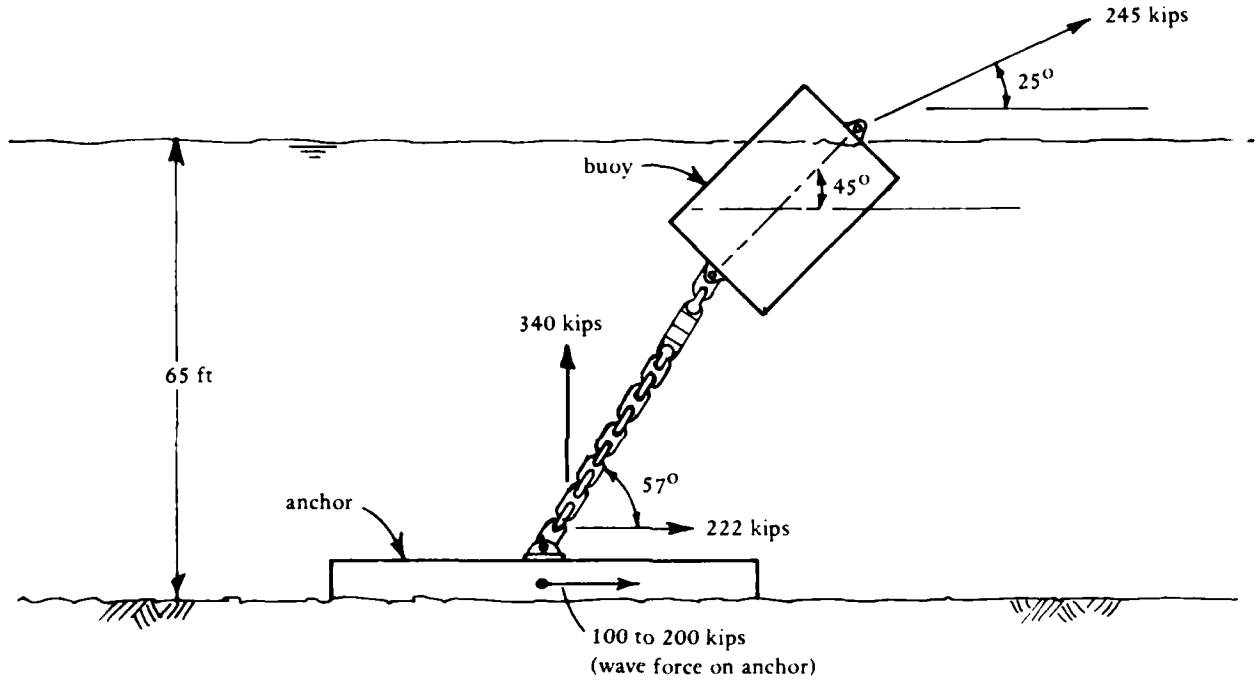

Figure 3. Loads at the ATTF SALM anchor (based on model test data for the catenary leg mooring, factor of safety is not included).

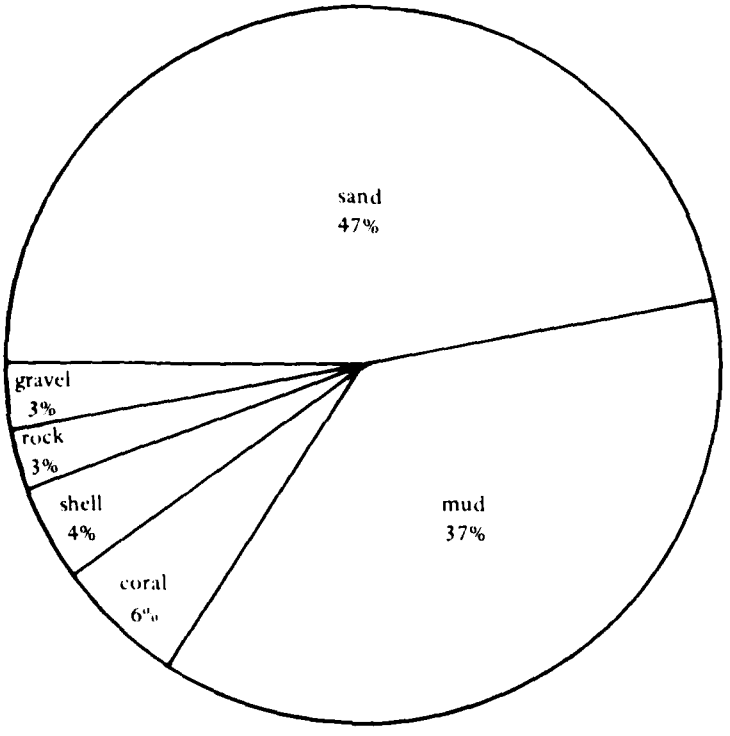

Figure 4. Relative occurrence of sediment types on the inner continental shelf determined from nautical charts (from Hayes, Ref. 5).

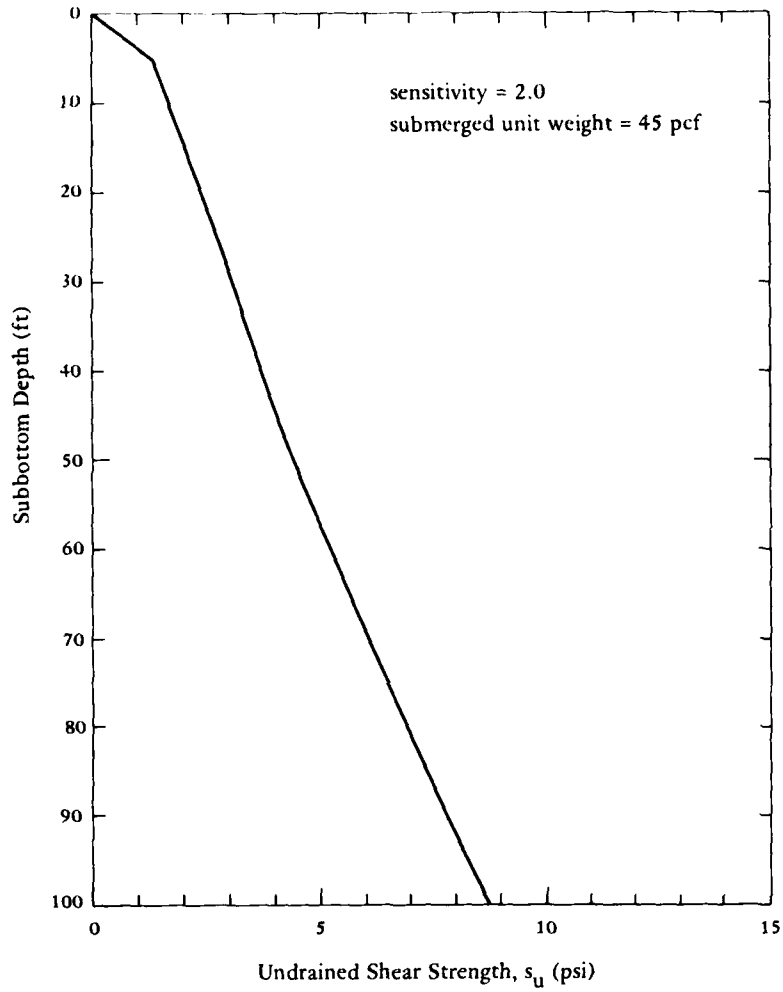

Figure 5. Assumed cohesive material strength profile (from Ref. 6).

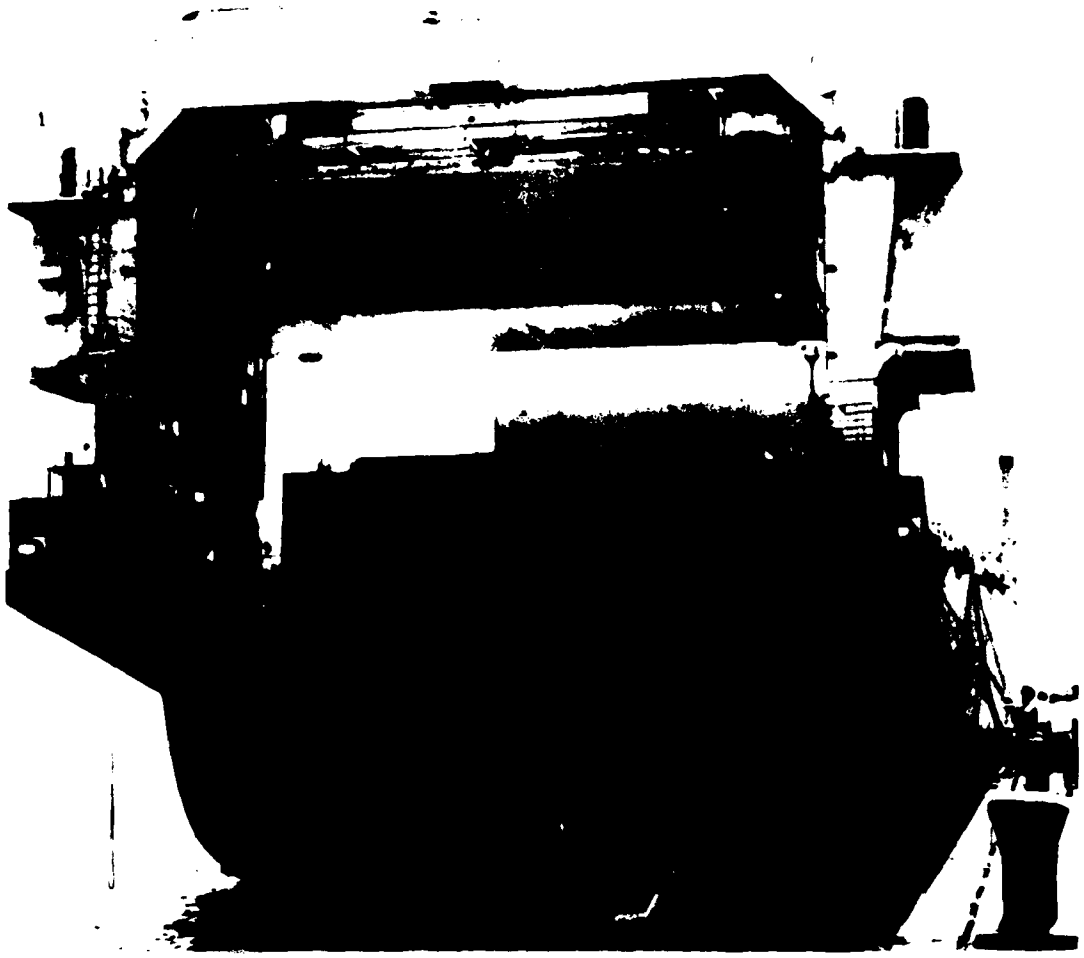

Figure 6. LASH gantry crane lifting lighter aboard (from Ref. 7).

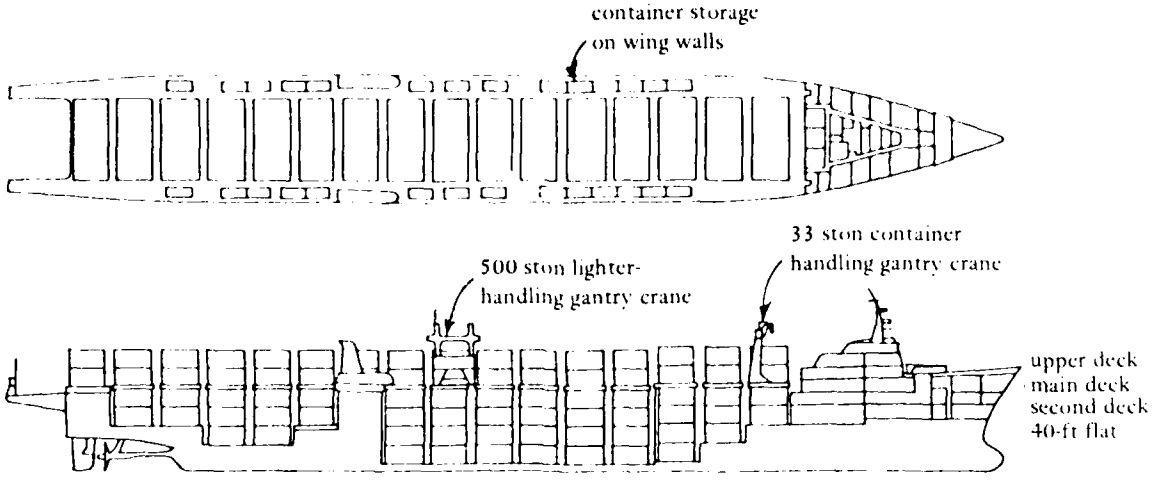

a. Plan and profile of a LASH ship.

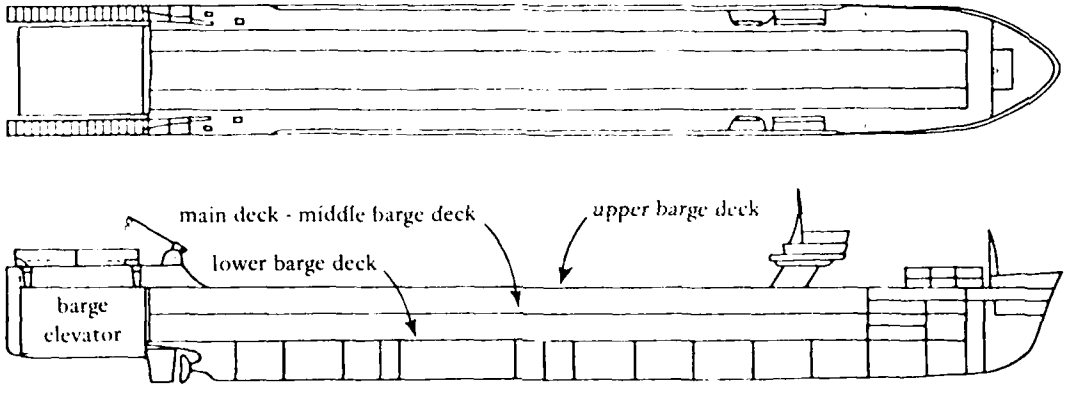

b. Plan and profile of a SEABEE ship.

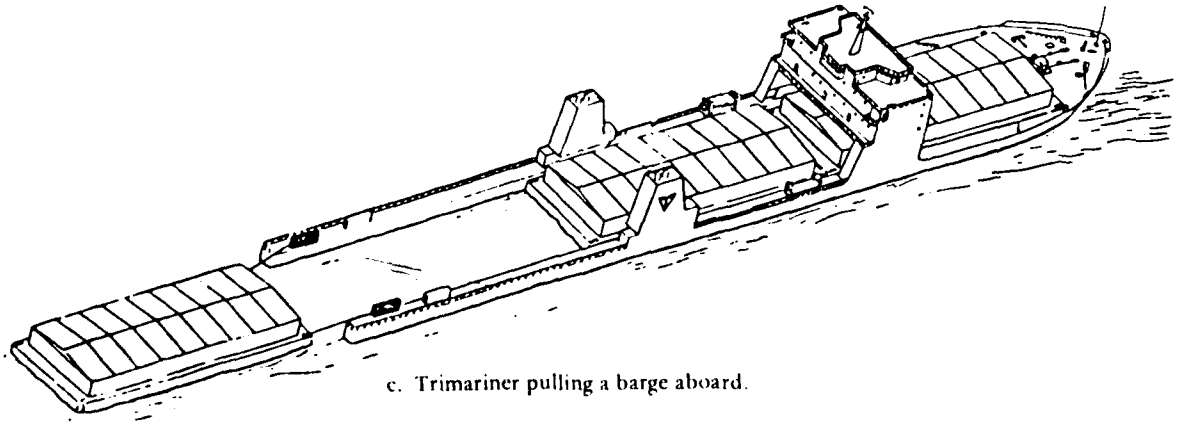

c. Trimariner pulling a barge aboard.

Figure 7. Possible heavy lift transport ships for the SALM anchor (from Ref. 7).

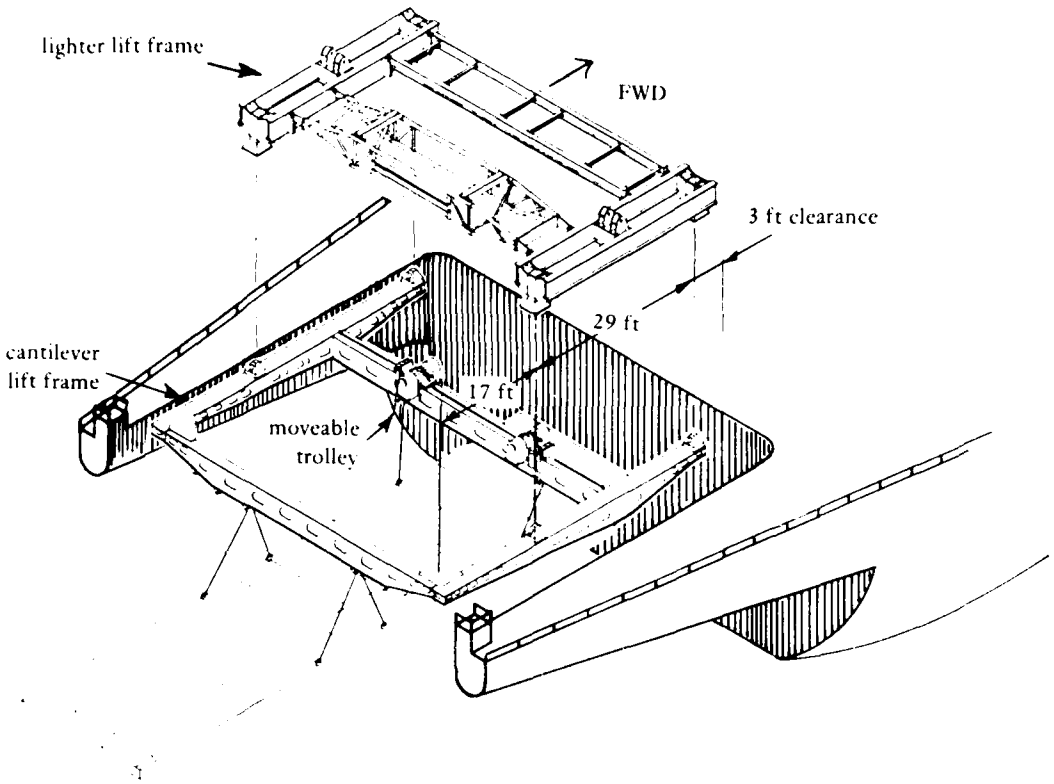

Figure 8. Lighter lift frame and cantilever lift frame showing clearance at the LASH vessel stern (from Ref. 7).

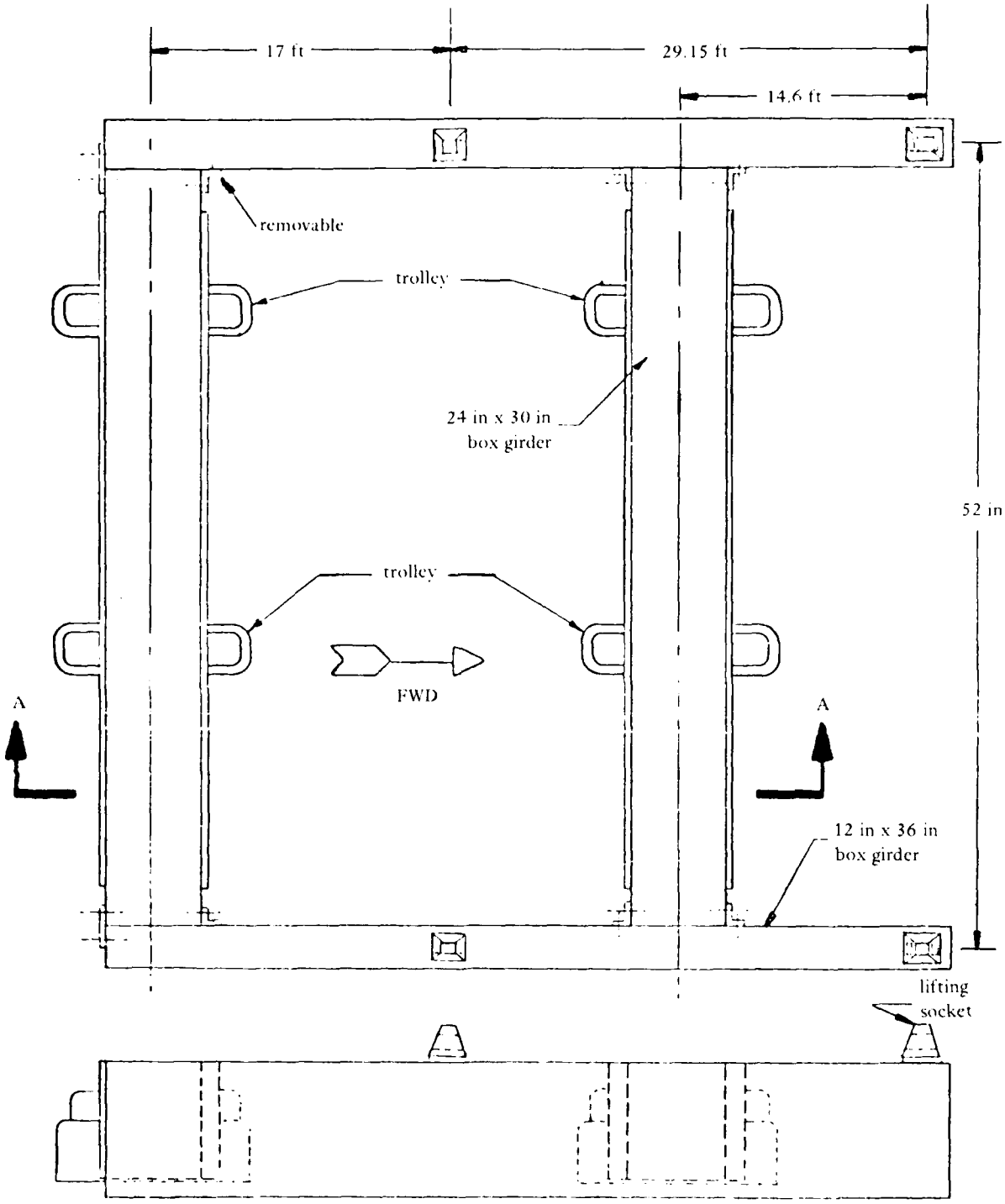

Figure 9. Cantilever lift frame with moveable lift points (from Ref. 7).

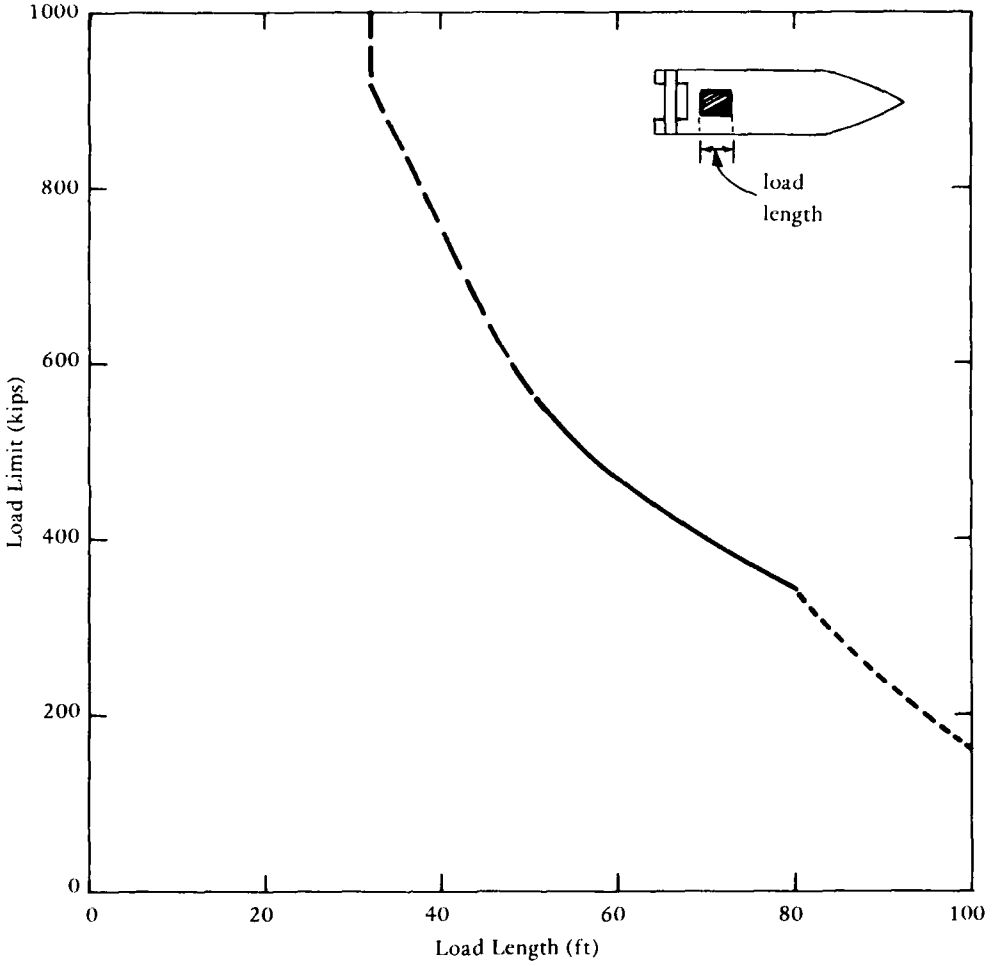

Figure 10. Projected LASH lighter crane lift capacity for outsized loads.

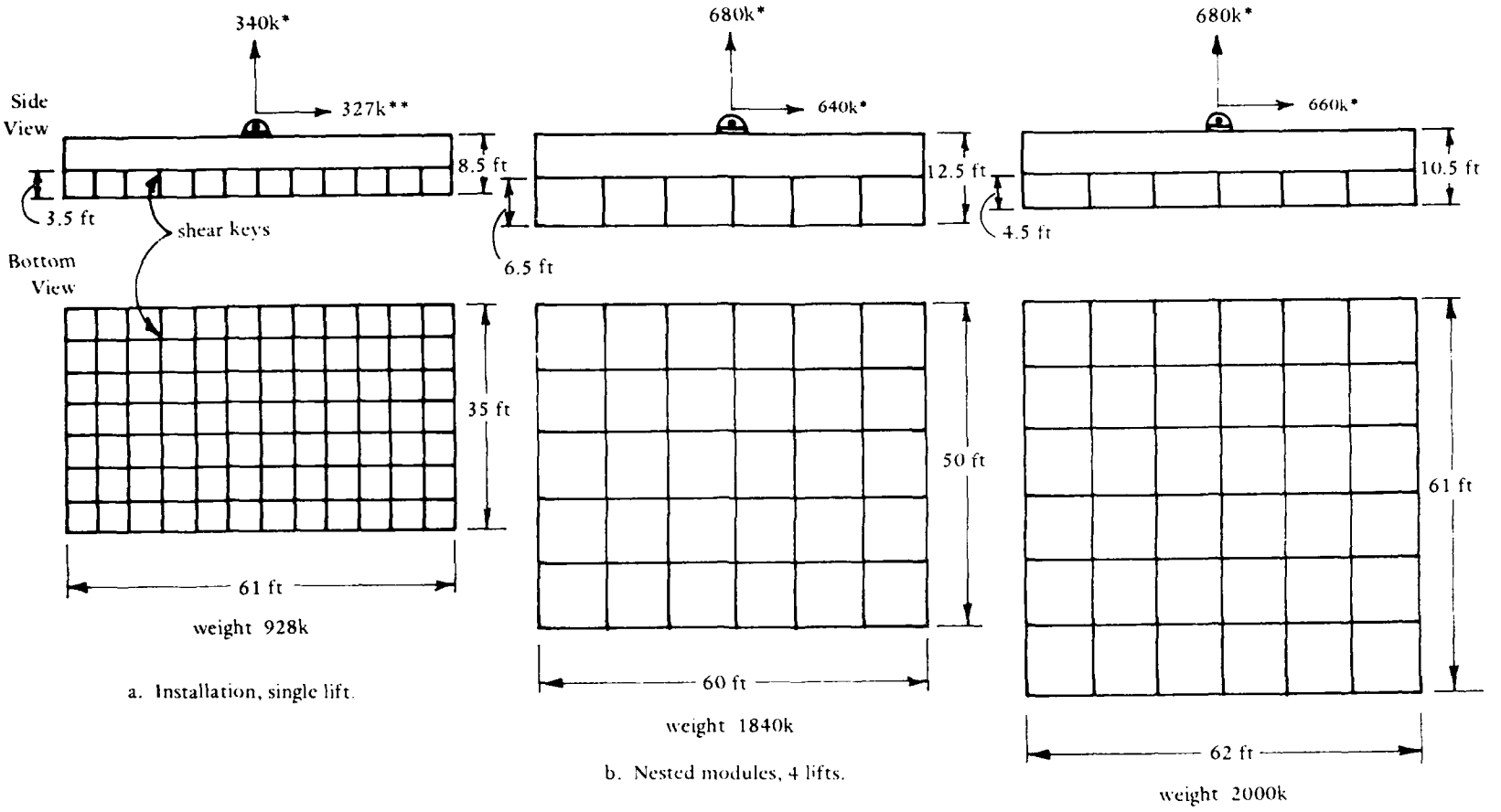

*kips

**doesn't meet safety factor requirements.

Figure 11. Three deadweight anchor concepts for the ATTF.

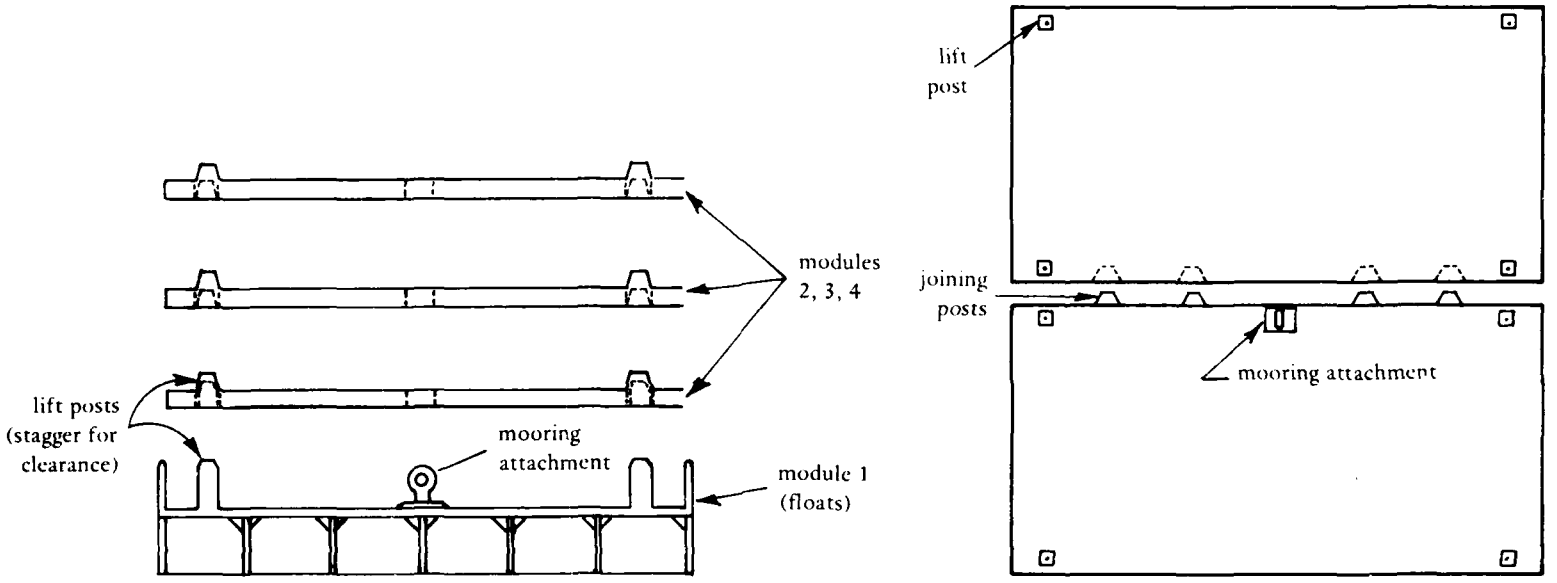

a. Nested modules, side view.

b. LASH barge sized modules assembled side by side, top view.

Figure 12. Two methods for lifting and assembling the required deadweight anchor.

DISTRIBUTION LIST

AFB AF Tech Office (Mgt & Ops), Tyndall, FL; AUL LSE 63-465, Maxwell AL; CESCH, Wright-Patterson; HQ Tactical Air Cmd (R. E. Fisher), Langley AFB VA; MAC DET (Col. P. Thompson) Scott, IL; Stinfo Library, Offutt NE
ARCTICSUBLAB Code 54, San Diego, CA
ARMY BMDSC-RE (H. McClellan) Huntsville AL; DAEN-MPE-D Washington DC
ARMY COASTAL ENGR RSCH CEN Fort Belvoir VA; R. Jachowski, Fort Belvoir VA
ARMY COE Philadelphia Dist. (LIBRARY) Philadelphia, PA
ARMY CORPS OF ENGINEERS MRD-Eng. Div., Omaha NE; Seattle Dist. Library, Seattle WA
ARMY CRREL A. Kovacs, Hanover NH
ARMY DARCOM AMCPM-CS (J. Carr), Alexandria VA
ARMY ENG WATERWAYS EXP STA Library, Vicksburg MS
ARMY ENGR DIST. Library, Portland OR
ARMY ENVIRON. HYGIENE AGCY Water Qual Div (Doner), Aberdeen Prov Ground, MD
ARMY MAT SYS ANALYSIS ACT Code DRXSY-CM (M Ogorzalek) Aberdeen Proving Grnd MD
ARMY MATERIALS & MECHANICS RESEARCH CENTER Dr. Lenoe, Watertown MA
ARMY MOBIL EQUIP R&D COM Code DRXFB-MR Fort Belvoir VA; F Stora Fort Belvoir VA; Mr. Cevasco, Fort Belvoir MD
ARMY MTMC Trans Engr Agency (D F Eichhorn) Newport News VA
ARMY TRANSPORTATION SCHOOL MAJ T Sweeney, Code ATSP CD-TE Fort Eustis VA; V Quinby Code ATSP-CPO-MS Fort Eustis VA
ARMY TRNG & DOCTRINE CMD Code ATCD-SP-L Fort Monroe VA
ASST SECRETARY OF THE NAVY Spec. Assist Energy (Leonard), Washington, DC; Spec. Assist Submarines, Washington DC
BUREAU OF RECLAMATION Code 1512 (C. Selander) Denver CO
CENTER FOR NAVAL ANALYSES Document Center (Darke), Arlington, VA
CINCLANT Civil Engr. Supp. Plans. Ofr Norfolk, VA
CINCPAC Fac Engrng Div (J44) Makalapa, HI
CNM Code 03462, Washington DC; Code 043 Washington DC
CNO Code NOP-964, Washington DC; Code OP 323, Washington DC; Code OP 405, Washington DC; Code OP 405, Wasington DC; Code OP 414 Washington DC; Code OP 414, Washington DC; Code OP 97 Walshinton DC; Code OP 97 Washington DC; Code OP 987 Washington DC; Code OP 987 Washinton DC; Code OP-413 Wash, DC; Code OP323 Washington DC; Code OPNAV 09B24 (H); Code OPNAV 22, Wash DC; Code OPNAV 23, Wash DC; OP987J (J. Boosman), Pentagon
COMCBPAC Operations Off, Makalapa HI
COMFLEACT, OKINAWA PWO, Kadena, Okinawa
COMNAVBEACHPHIBREFTRAGRU ONE San Diego CA
COMNAVMARIANAS Code N4, Guam
COMOCEANSYSPAC SCE, Pearl Harbor HI
COMSUBDEVGRUONE Operations Offr, San Diego, CA
NAVSURFLANT Norfolk, VA
NAVSURFPAC San Diego, CA
COMOPTEVFOR CMDR, Norfolk, VA; Code 701A, San Diego, CA
DEFENSE INTELLIGENCE AGENCY Dir., Washington DC
DLSIE Army Logistics Mgt Center, Fort Lee, VA
DNA STTL, Washington DC
DOE Dr. Cohen
DTIC Defense Technical Info Ctr Alexandria, VA
DTNSRDC Anna Lab (Code 1175) Annapolis MD; Anna Lab (Code 1175) Annapolis MD; Anna Lab (Code 1568) Annapolis MD
DTNSRDC Code 4111 (R. Gierich), Bethesda MD
FMFLANT CEC Offr, Norfolk VA
FMFPAC CG Pearl Harbor
HCU ONE CO, Bishops Point, HI
MARINE CORPS BASE First Service Support Group Camp Pendleton CA; PWO Camp Lejeune NC; PWO, Camp S. D. Butler, Kawasaki Japan

MCAS Facil Engr. Div. Cherry Point NC; Code PWE, Kaneohe Bay HI; Code S4, Quantico VA; PWO Kaneohe Bay HI
MCDEC NSAP REP, Quantico VA; P&S Div Quantico VA
MCRD PWO, San Diego Ca
MILITARY SEALIFT COMMAND Washington DC
NAF PWO Sigonella Sicily; PWO, Atsugi Japan
NALF OINC, San Diego, CA
NARF Equipment Engineering Division (Code 61000), Pensacola, FL
NAS Code 18700, Brunswick ME; Dir. Util. Div., Bermuda; ENS Buchholz, Pensacola, FL; PWD Maint. Div., New Orleans, Belle Chasse LA; PWD, Willow Grove PA; PWO Belle Chasse, LA; PWO Key West FL; PWO Whiting Fld, Milton FL; PWO, Glenview IL; SCE Norfolk, VA; SCE, Barbers Point HI
NATL RESEARCH COUNCIL Naval Studies Board, Washington DC
NAVACT PWO, London UK
NAVAEROSPREGMEDCEN SCE, Pensacola FL
NAVCHAPGRU CO Williamsburg VA
NAVCOASTSYSCEN Code 772 (C B Koesy) Panama City FL
NAVCOASTSYSTCTR CO, Panama City FL; Code 713 (J Quirk) Panama City, FL, Code 715 (J. Mittleman) Panama City, FL, Library Panama City, FL
NAVCOMMAREAMSTRSTA PWO, Norfolk VA; PWO, Wahiawa HI; SCE Unit 1 Naples Italy
NAVCOMMSTA Code 401 Nea Makri, Greece; PWO, Exmouth, Australia
NAVEDTRAPRODEVCEN Tech Library
NAVELEXSYSCOM Code PME-124-61, Washington DC
NAVENVIRHLTHCEN CO, Norfolk, VA
NAVEODFAC Code 605, Indian Head MD
NAVFAC PWO, Centerville Bch, Ferndale CA
NAVFAC PWO, Lewes DE
NAVFACENGCOM Code 043 Alexandria, VA; Code 044 Alexandria, VA; Code 0451 Alexandria, VA; Code 0453 (D Potter) Alexandria, VA; Code 0453C, Alexandria, VA; Code 0454B Alexandria, Va; Code 04B3 Alexandria, VA; Code 04B5 Alexandria, VA; Code 06, Alexandria VA; Code 100 Alexandria, VA; Code 1002B (J Lemanis) Alexandria, VA; Code 1113 (M. Carr) Alexandria, VA; Code 1113 (T. Stevens) Alexandria, VA; Code 1113 Alexandria, VA; Morrison Yap, Caroline Is.; PC-2 Alexandria, VA
NAVFACENGCOM - CHES DIV, Code 402 (D Scheesele) Washington, DC; Code 405 Wash, DC; Code FPO-1 Wash, DC; FPO-1 (Spencer) Wash, DC; FPO-1 Wash, DC
NAVFACENGCOM - LANT DIV, Code 10A, Norfolk VA; Eur. BR Deputy Dir, Naples Italy; European Branch, New York, RDT&ELO 102, Norfolk VA
NAVFACENGCOM - NORTH DIV (Boretsky) Philadelphia, PA; CO; Code 09P (LCDR A.J. Stewart); Code 1028, RDT&ELO, Philadelphia PA; Design Div. (R. Masino); Philadelphia PA; ROICC, Contract , Crane IN
NAVFACENGCOM - PAC DIV, Code 2011 Pearl Harbor, HI; Code 402, RDT&E, Pearl Harbor HI; Commander, Pearl Harbor, HI
NAVFACENGCOM - SOUTH DIV Code 90, RDT&ELO, Charleston SC
NAVFACENGCOM - WEST DIV AROICC, Contracts, Twentynine Palms CA, Code 04B San Bruno, CA; 09P/20 San Bruno, CA, RDT&ELO Code 2011 San Bruno, CA
NAVFACENGCOM CONTRACT AROICC, Point Mugu CA; Eng Div dir, Southwest Pac, Manila, PI; OICC, Southwest Pac, Manila, PI; ROICC AF Guam; ROICC, Diego Garcia Island; ROICC , Keflavik, Iceland; ROICC Pacific, San Bruno CA
NAVFORCARIB Commander (N42), Puerto Rico
NAVNUPWRU MUSE DET Code NPU-30 Port Hueneme, CA
NAVOCEANO Code 1600 Bay St Louis, MS
NAVOCEANSYSCEN Code 41, San Diego, CA, Code 4473 Bayside Library, San Diego, CA; Code 52 (H Talkington) San Diego CA; Code 5204 (J. Stachiw), San Diego, CA; Code 5214 (H. Wheeler), San Diego CA; Code 5221 (R.Jones) San Diego Ca, Code 5311 San Diego, CA, Tech Library, Code 447
NAVPETRES Director, Washington DC
NAVPGSCOL Code 61WL (O. Wilson) Monterey CA; D Leipper, Monterey CA, F. Thornton, Monterey CA
NAVPHIBASE C O ACB ONE San Diego CA; CO, ACB 2 Norfolk, VA, COMNAVBEACHGRU TWO Norfolk VA; Code S3T, Norfolk VA; Dir. Amphib Warfare Brd Staff, Norfolk, VA; Harbor Clearance Unit Two, Little Creek, VA
NAVREGMEDCEN Chief of Police, Camp Pendleton CA; SCE (D. Kaye), SCE, Guam

NAVSCOLCECOFF C35 Port Hueneme, CA
NAVSEASYSCOM Code 00C DG DiGeorge, Washington, DC; Code 03Z5, Program Mgr., Washington, DC; Code 00C (LT R. MacDougal), Washington DC; Code SEA 00C Washington, DC
NAVSEC Code 6034 (Library), Washington DC
NAVSECGRU ACT PWO, Adak AK
NAVSHIPRU PEAC Library, Guam, SCF Subic Bay
NAVSHIPYD, Code 202.4, Long Beach CA; Code 202.5 (Library) Puget Sound, Bremerton WA; Code 380, (Woodroff) Norfolk, Portsmouth, VA; Code 440 Portsmouth NH; Code 440, Puget Sound, Bremerton WA; Salvage Supt, Phila., PA; Tech Library, Vallejo, CA
NAVSTA CO Naval Station, Mayport FL; CO Roosevelt Roads P.R. Puerto Rico; Engr. Dir., Rota Spain, Long Beach, CA; PWD (LTJG P.M. Motolenich), Puerto Rico; PWO Midway Island; PWO, Keflavik Iceland; PWO, Mayport FL; SCF, Guam; SCF, Subic Bay, R.P.; Utilities Engr Off (A.S. Ritchie), Rota Spain; Code 4, 12 Marine Corps Dist, Treasure Is., San Francisco CA
NAVSUPPACT Code 413, Seattle WA; LTJG McGarrah, SEC, Vallejo, CA
NAVSTA Security Offr, San Francisco, CA
NAVSURFWPNCEN PWO, White Oak, Silver Spring, MD
NAVTECHTRACEN SCF, Pensacola FL
NAVWPNCEN Code 2636 (W. Bonner), China Lake CA
NAVWPNSTA Code 092, Colts Neck NJ
NAVWPNSTA PW Office (Code 09C1) Yorktown, VA
NAVWPNSTA PWO Seal Beach CA
NAVWPNSUPPCEN Code 09 Crane IN
NCBU 405 OIC San Diego, CA
NCBC Code 10 Davisville, RI; Code 155, Port Hueneme CA; Code 156, Port Hueneme, CA
NCR 20, Commander, FWD 30th CDR Diego Garcia Island
NMCB 5, Operations Dept.; 74, CO; Forty, CO; THREE, Operations Off
NOAA Library Rockville, MD
NORDA Code 410 Bay St. Louis, MS; Code 440 (Ocean Rsch Off) Bay St. Louis MS
NRL Code 8400 Washington, DC; Code 8441 (R.A. Skop), Washington DC; Rosenthal, Code 8440, Wash. DC
NSC Code 54.1 (Wynne), Norfolk VA
NSD SCF, Subic Bay, R.P.
NTC OICC, CBU-401, Great Lakes IL
NUCLEAR REGULATORY COMMISSION T.C. Johnson, Washington, DC
NUSC Code 131 New London, CT; Code EA123 (R.S. Munn), New London CT; Code S332, B-80 (J. Wilcox); Code TA131 (G. De la Cruz), New London CT
OCEANAV Mangmt Info Div., Arlington VA
OCEANSYSLANT LT A.R. Giancola, Norfolk VA
OFFICE SECRETARY OF DEFENSE ASD (MRA&L) Code CSS/CC Washington, DC; OASD (MRA&L) Pentagon (T. Casberg), Washington, DC
ONR (Dr. E.A. Silva) Arlington, VA; Central Regional Office, Boston, MA; Code 481, Arlington VA; Code 481, Bay St. Louis, MS; Code 700F Arlington VA; Dr. A. Laufer, Pasadena CA
PHIBCB 1 P&F, Coronado, CA
PMTC Code 3331 (S. Opatowsky) Point Mugu, CA; EOD Mobile Unit, Point Mugu, CA; Pat. Counsel, Point Mugu CA
PWC CO Norfolk, VA; CO, (Code 10), Oakland, CA; CO, Great Lakes IL; Code 10, Great Lakes, IL; Code 120, Oakland CA; Code 120C, (Library) San Diego, CA; Code 128, Guam; Code 154, Great Lakes, IL; Code 200, Great Lakes IL; Code 220.1, Norfolk VA; Code 30C, San Diego, CA; Code 400, Great Lakes, IL; Code 400, Pearl Harbor, HI; Code 400, San Diego, CA; Code 420, Great Lakes, IL; Code 420, Oakland, CA; Code 505A (H. Wheeler); Code 700, Great Lakes, IL; Code 700, San Diego, CA
UCT TWO OIC, Norfolk, VA; OIC, Port Hueneme CA
U.S. MERCHANT MARINE ACADEMY Kings Point, NY (Reprint Custodian)
US DEPT OF INTERIOR Bureau of Land MNGMNT - Code 733 (T.E. Sullivan) Wash, DC
US GEOLOGICAL SURVEY OH, Marine Geology, Pitelekt, Reston VA
US NAVAL FORCES Korea (ENJ-P&O)
USCG (G-ECV) Washington Dc; (Smith), Washington, DC; G-EOE-4/61 (T. Dowd), Washington DC
USCG R&D CENTER CO Groton, CT; D. Motherway, Groton CT; Tech. Dir. Groton, CT
USDA Forest Service, San Dimas, CA

USNA Civil Engr Dept (R. Etchyl) Annapolis MD; Ocean Sys. Eng Dept (Dr. Monney) Annapolis, MD; PWD Engr. Div. (C. Bradford) Annapolis MD
AMERICAN UNIVERSITY Washington DC (M. Norton)
CALIF. DEPT OF NAVIGATION & OCEAN DEV. Sacramento, CA (G. Armstrong)
CALIF. MARITIME ACADEMY Vallejo, CA (Library)
CALIFORNIA INSTITUTE OF TECHNOLOGY Pasadena CA (Keck Ref. Rm)
CALIFORNIA STATE UNIVERSITY LONG BEACH, CA (CHELAPATI); LONG BEACH, CA (YEN)
CATHOLIC UNIV. Mech Engr Dept, Prof. Niedzwecki, Wash., DC
COLORADO STATE UNIV., FOOTHILL CAMPUS Fort Collins (Nelson)
CORNELL UNIVERSITY Ithaca NY (Serials Dept, Engr Lib.)
DAMES & MOORE LIBRARY LOS ANGELES, CA
DUKE UNIV. MEDICAL CENTER B. Muga, Durham NC; DURHAM, NC (VESIC)
FLORIDA ATLANTIC UNIVERSITY Boca Raton FL (W. Tessin); Boca Raton, FL (McAllister)
FLORIDA TECHNOLOGICAL UNIVERSITY ORLANDO, FL (HARTMAN)
GEORGIA INSTITUTE OF TECHNOLOGY Atlanta GA (B. Mazanti)
INSTITUTE OF MARINE SCIENCES Morehead City NC (Director)
IOWA STATE UNIVERSITY Ames IA (CE Dept, Handy)
WOODS HOLE OCEANOGRAPHIC INST. Woods Hole MA (Winget)
KEENE STATE COLLEGE Keene NH (Cunningham)
LEHIGH UNIVERSITY BETHLEHEM, PA (MARINE GEOTECHNICAL LAB., RICHARDS); Bethlehem PA (Fritz Engr. Lab No. 13, Beedle); Bethlehem PA (Linderman Lib. No.30, Flecksteiner)
MAINE MARITIME ACADEMY CASTINE, ME (LIBRARY)
MICHIGAN TECHNOLOGICAL UNIVERSITY Houghton, MI (Haas)
MIT Cambridge MA; Cambridge MA (Rm 10-500, Tech. Reports, Engr. Lib.); Cambridge MA (Whitman)
NATL ACADEMY OF ENG. ALEXANDRIA, VA (SEARLE, JR.)
NEW MEXICO SOLAR ENERGY INST. Dr. Zwibel Las Cruces NM
NYS ENERGY OFFICE Library, Albany NY
OREGON STATE UNIVERSITY (CE Dept Grace) Corvallis, OR; CORVALLIS, OR (CE DEPT, BELL); Corvalis OR (School of Oceanography)
PENNSYLVANIA STATE UNIVERSITY STATE COLLEGE, PA (SNYDER); State College PA (Applied Rsch Lab); UNIVERSITY PARK, PA (GOTOLSKI)
PURDUE UNIVERSITY Lafayette IN (Leonards); Lafayette, IN (Altschaeffl); Lafayette, IN (CE Engr. Lib)
SAN DIEGO STATE UNIV. I. Noorany San Diego, CA
SCRIPPS INSTITUTE OF OCEANOGRAPHY LA JOLLA, CA (ADAMS)
SEATTLE U Prof Schwaegler Seattle WA
SOUTHWEST RSCH INST King, San Antonio, TX; R. DeHart, San Antonio TX
STANFORD UNIVERSITY Engr Lib, Stanford CA
STATE UNIV. OF NEW YORK Buffalo, NY; Fort Schuyler, NY (Longobardi)
TEXAS A&M UNIVERSITY College Station TX (CE Dept. Herbich); W.B. Ledbetter College Station, TX
UNIVERSITY OF CALIFORNIA BERKELEY, CA (CE DEPT, GERWICK); BERKELEY, CA (CE DEPT, MITCHELL); Berkeley CA (Dept of Naval Arch.); Berkeley CA (E. Pearson); La Jolla CA (Acq. Dept, Lib. C-075A); M. Duncan, Berkeley CA; SAN DIEGO, CA, LA JOLLA, CA (SEROCKI)
UNIVERSITY OF CONNECTICUT Groton CT (Inst. Marine Sci, Library)
UNIVERSITY OF DELAWARE Newark, DE (Dept of Civil Engineering, Chesson)
UNIVERSITY OF HAWAII HONOLULU, HI (SCIENCE AND TECH. DIV.)
UNIVERSITY OF ILLINOIS Metz Ref Rm, Urbana IL; URBANA, IL (DAVISSON); URBANA, IL (LIBRARY); URBANA, IL (NEWMARK)
UNIVERSITY OF MASSACHUSETTS (Heronemus), Amherst MA CE Dept
UNIVERSITY OF MICHIGAN Ann Arbor MI (Richart)
UNIVERSITY OF NEBRASKA-LINCOLN Lincoln, NE (Ross Ice Shelf Proj.)
UNIVERSITY OF NEW HAMPSHIRE DURHAM, NH (LAVOIE)
UNIVERSITY OF RHODE ISLAND KINGSTON, RI (PAZIS)
UNIVERSITY OF SO. CALIFORNIA Univ So. Calif
UNIVERSITY OF TEXAS Inst. Marine Sci (Library), Port Arkansas TX
UNIVERSITY OF TEXAS AT AUSTIN Austin TX (R. Olson)
UNIVERSITY OF WASHINGTON Seattle WA (M. Sherif); SEATTLE, WA (APPLIED PHYSICS LAB); SEATTLE, WA (MERCHANT); SEATTLE, WA (OCEAN ENG RSCH LAB, GRAY); SEATTLE, WA

(PACIFIC MARINE ENVIRON. LAB., HALPERN); Seattle WA (E. Linger); Seattle, WA Transportation, Construction & Geom. Div
VIRGINIA INST. OF MARINE SCI. Gloucester Point VA (Library)
ALFRED A. YEE & ASSOC. Honolulu HI
AMETEK Offshore Res. & Engr Div
ARCAIR CO. D. Young, Lancaster OH
ARVID GRANT OLYMPIA, WA
ATLANTIC RICHFIELD CO. DALLAS, TX (SMITH)
BECHTEL CORP. SAN FRANCISCO, CA (PHELPS)
BETHLEHEM STEEL CO. Dismuke, Bethelehem, PA
BOUW KAMP INC Berkeley
BRAND INDUS SERV INC. J. Buehler, Hacienda Heights CA
BROWN & CALDWELL E M Saunders Walnut Creek, CA
BROWN & ROOT Houston TX (D. Ward)
CANADA Can-Dive Services (English) North Vancouver; Library, Calgary, Alberta; Lockheed Petro. Serv. Ltd. New Westminster B.C.; Lockheed Petrol. Srv. Ltd., New Westminster BC; Mem Univ Newfoundland (Chari), St Johns; Nova Scotia Rsch Found. Corp. Dartmouth, Nova Scotia; Surveyor, Nenninger & Chenevert Inc., Montreal; Trans-Mnt Oil Pipe Lone Corp. Vancouver, BC Canada; Warnock Hersey Prof. Srv Ltd, La Sale, Quebec
CHEVRON OIL FIELD RESEARCH CO. LA HABRA, CA (BROOKS)
COLUMBIA GULF TRANSMISSION CO. HOUSTON, TX (ENG. LIB.)
CONCRETE TECHNOLOGY CORP. TACOMA, WA (ANDERSON)
CONTINENTAL OIL CO O. Maxson, Ponca City, OK
DILLINGHAM PRECAST F. McHale, Honolulu HI
DURLACH, O'NEAL, JENKINS & ASSOC. Columbia SC
EVALUATION ASSOC. INC KING OF PRUSSIA, PA (FEDELE)
EXXON PRODUCTION RESEARCH CO Houston, TX (Chao)
FRANCE Dr. Dutertre, Boulogne; L. Pliskin, Paris; P. Jensen, Boulogne; Roger LaCroix, Paris
GEOTECHNICAL ENGINEERS INC. Winchester, MA (Paulding)
GOULD INC. Shady Side MD (Ches. Inst. Div., W. Paul)
HALEY & ALDRICH, INC. Cambridge MA (Aldrich, Jr.)
ITALY M. Caironi, Milan; Sergio Tattoni Milano
JAMES CO. R. Girdley, Orlando FL
LAMONT-DOHERTY GEOLOGICAL OBSERV. Palisades NY (McCoy); Palisades NY (Selwyn)
LIN OFFSHORE ENGRG P. Chow, San Francisco CA
LOCKHEED MISSILES & SPACE CO. INC. L. Trimble, Sunnyvale CA; Sunnyvale CA (Rynewicz); Sunnyvale, CA (K.L. Krug)
LOCKHEED OCEAN LABORATORY San Diego CA (F. Simpson)
MARATHON OIL CO Houston TX
MARINE CONCRETE STRUCTURES INC. MEFAIRIE, LA (INGRAHAM)
MC CLELLAND ENGINEERS INC Houston TX (B. McClelland)
MCDONNEL AIRCRAFT CO. Dept 501 (R.H. Fayman), St Louis MO
MEXICO R. Cardenas
MOBIL PIPE LINE CO. DALLAS, TX MGR OF ENGR (NOACK)
MOFFATT & NICHOL ENGINEERS (R. Palmer) Long Beach, CA
NEWPORT NEWS SHIPBLDG & DRYDOCK CO. Newport News VA (Tech. Lib.)
NORWAY A. Torum, Trondheim; DET NORSKE VERITAS (Library), Oslo; DET NORSKE VERITAS (Roren) Oslo; I. Foss, Oslo; J. Creed, Ski; Norwegian Tech Univ (Brandtzaeg), Trondheim
OCEAN ENGINEERS SAUSALITO, CA (RYNECKI)
OCEAN RESOURCE ENG. INC. HOUSTON, TX (ANDERSON)
PACIFIC MARINE TECHNOLOGY Duvall, WA (Wagner)
PORTLAND CEMENT ASSOC. SKOKIE, IL (CORLEY; Skokie IL (Rsch & Dev Lab. Lib.)
PRESCON CORP TOWSON, MD (KELLER)
R J BROWN ASSOC (McKeehan), Houston, TX
RAYMOND INTERNATIONAL INC. E Colle Soil Tech Dept, Pennsauken, NJ
SANDIA LABORATORIES Library Div., Livermore CA
SCHUPACK ASSOC SO. NORWALK, CT (SCHUPACK)
SEATECH CORP. MIAMI, FL (PERONI)

SHELL DEVELOPMENT CO Houston TX (C Sellars Jr.) Houston TX (E Doyle)
SHELL OIL CO HOUSTON TX (MARSHALL) Houston TX (R de Castongrence) E Boaz Houston TX
SWEDEN GeoTech Inst. VBB (Library), Stockholm
TIDEWATER CONSTR CO Norfolk VA (Fowler)
UNITED KINGDOM A Denton London Cement & Concrete Assoc Wexham Springs Slough Bucks D Lee London, D New G Maunsell & Partners London I Derrington London Library Bristol, R Browne Southall, Middlesex, R Rudham Oxfordshire, Shaw & Hatton (E Hansen) London Taylor Woodrow Constr (014P), Southall Middlesex, Taylor Woodrow Constr (Smith) Southall Middlesex Univ of Bristol (R Morgan), Bristol
WESTINGHOUSE ELECTRIC CORP Annapolis MD (Oceanic Div Lib Bryan)
WESTINTRUCORP Egerton, Oxnard CA
WISS JANNEY, ELSTNER, & ASSOC Northbrook, IL (D W Pfeifer)
WM CLAPP LABS BATTELLE DUXBURY MA (LIBRARY), Duxbury MA (Richards)
WOODWARD CLYDE CONSULTANTS (A Harrigan) San Francisco, PLYMOUTH MEETING PA (CROSS III)
AL SMOOTS Los Angeles, CA
BARA, JOHN P Lakewood, CO
BRAHTZ La Jolla, CA
BULLOCK La Canada
F HEUZE Alamo, CA
LAYTON Redmond, WA
R E BESIER Old Saybrook CT
WM TALBOT Orange CA

LMED

8