AD-A095 634 ROCKWELL INTERNATIONAL DALLAS TEX COLLINS RADIO GROUP F/G 1/3
STRESS ANALYSIS OF AIRCRAFT MODIFICATIONS (C-141B AIRCRAFT). JO--ETC(U)
OCT 80 D B RAGAN F09603-80-C-0602

UNCLASSIFIED NL

1 OF 2
AD
A095634

AD A095634

REVISI			
LTR	DESCRIPTION	DATE	APVD

LEVEL II

20

STRESS ANALYSIS
OF
AIRCRAFT MODIFICATIONS
(C-141B AIRCRAFT).

JOINT AIRBORNE COMMUNICATIONS CENTER/COMMAND POST
(JACC/CP) PROVISIONS

DTIC
ELECTE
FEB 25 1981
C

DISTRIBUTION STATEMENT A
Approved for public release;
Distribution Unlimited

DDC FILE COPY

REV STATUS OF SHEETS	REV	–	–	–	–	–	–	–	–	–	–	–	–	–	–	–	–	–	–	–	–	–	–	–	–
	SHEET	1	2	3	4	5	6	7	8	9	10	11	12	13	14	15	16	17	18	19	20	21	22	23	24
		–	–	–	–	–	–	–	–	–	–	–	–	–	–	–	–	–	–	–	–	–	–	–	–
		25	26	27	28	29	30	31	32	33	34	35	36	37	38	39	40	41	42	43	44	45	46	47	48
		–	–	–	–	–	–	–	–	–	–	–	–	–	–	–	–	–	–	–	–	–	–	–	–
		49	50	51	52	53	54	55	56	57	58	59	60	61	62	63	64	65	66	67	68	69	70	71	72
		–	–	–	–	–	–	–	–	–	–	–	–	–	–	–	–	–	–	–	–	–	–	–	–
		73	74	75	76	77	78	79	80	81	82	83	84	85	86	87	88	89	90	91	92	93	94	95	96
		–	–	–	–	–	–	–	–	–	–	–	–	–	–	–	–	–	–	–	–	–	–	–	–
		97	98	99	100	101	102	103	104	105	106	107	108	109	110	111	112	113	114	115	116	117	118	119	120
		–	–	–	–	–	–	–	–	–	–	–	–	–	–	–	–	–	–	–	–	–	–	–	–
		121	122	123	124	125	126	127																	
		–	–	–	–	–	–	–																	

CONTRACT NO.	F09603-80-C-0602
PREP	D.B. RAGAN 10-24-80
CHK	
APVD	10-27-80

ROCKWELL INTERNATIONAL CORPORATION
COLLINS RADIO GROUP
DALLAS, TEX 75207 NEWPORT BEACH, CALIF 92663 CEDAR RAPIDS IA 52406

STRESS ANALYSIS C-141B AIRCRAFT
JACC/CP PROGRAM

SIZE	CODE IDENT	DWG NO.
A	13499	649-2924-001
SCALE		SHEET 1 OF 127

METRIC

REL ☐ REV__ TC__ CR__ NB__ DL__

REVISIONS			
LTR	DESCRIPTION	DATE	APVD

STRESS ANALYSIS
OF
AIRCRAFT MODIFICATIONS
(C-141B AIRCRAFT)

JOINT AIRBORNE COMMUNICATIONS CENTER/COMMAND POST
(JACC/CP) PROVISIONS

Accession For
NTIS
DTIC
Ltr 182 on Perform
dtd 5 Feb 81
A

REV STATUS OF SHEETS	REV																								
	SHEET	1	2	3	4	5	6	7	8	9	10	11	12	13	14	15	16	17	18	19	20	21	22	23	24

CONTRACT NO.
F09603-80-C-0602

PREP D.B. RAGAN 10-24-80

CHK

APVD

ROCKWELL INTERNATIONAL CORPORATION
COLLINS RADIO GROUP
DALLAS, TEX 75207 NEWPORT BEACH, CALIF 92663 CEDAR RAPIDS, IA 52406

STRESS ANALYSIS C-141B AIRCRAFT
JACC/CP PROGRAM

SIZE	CODE IDENT	DWG NO.
A	13499	649-2924-001

SCALE

SHEET 1 OF 127

METRIC

REL ☐ REV__ TC__ CR_ NB_ DL_ TO_

TABLE OF CONTENTS

SUMMARY
REFERENCES

1.0 AT1108 UHF/VHF/AM ANTENNA INSTALLATION P. 5

2.0 H.F. LONGWIRE INSTALLATION P. 9

3.0 UPS-192 HF RECEIVE ANTENNA INSTALLATION P. 29

4.0 437S-1C VHF/FM ANTENNA INSTALLATION P. 32

5.0 DMC34-3/B UHF SATCOM ANTENNA INSTALLATION P. 47

SUMMARY

Stress Analyses were performed on the following aircraft modifications:

- AT1108 Antenna Installation,
- HF Longwire Installation,
- UPS-192 Antenna Installation,
- 437S-1C Antenna Installation, and
- SATCOM Antenna Installation .

The detailed conclusions of each of the topics above are contained after each sub-analysis. However, the general conclusion is that each of the subject modifications in no way impare the airworthiness of the aircraft in that the aircraft strength is equal to or greater than the original unmodified strength.

p 4

REFERENCES

1. T.O. 1C-141A-3

2. MIL HDBK 5C

3. Formulas For Stress and Strain, 5th Edition, Roark & Young

4. Analysis and Design of Flight Vehicle Structures, 2nd Edition, E.F. Bruhn

1.0 AT 1108 UHF/VHF/AM ANTENNA INSTALLATION
DWG. NO. 649-2883-001

The antenna is mounted on top of the fuselage at F.S. 1267, LBL 6.40. The modification consist of a rectangular plate, 5.12 X 12.25 X .093 thk, attached to the original skin and a 7.29 X 6.90 X .080 thk doubler. The new rivets are NAS 1097D4. There are two .750 Dia. holes in the doubler and filler plate.

Reference Drawings:

649-2883	Installation
649-2880	Filler
649-2879	Doubler

(a) Strength of original skin Structure

skin: 7075 T6 Clad .056 thk (Ref 1)

Critical Shear buckling stress of panel

$$\left.\begin{array}{l} a = 20.0 \\ b = 6 \end{array}\right\} \quad a/b = 3.33$$

$K \approx 8.5$ (Ref 3 table 35 manner 4 b)

$$S_{cr} = K \frac{E}{1-\mu^2}\left(t/b\right)^2$$

$$= 8.5 \frac{(10.3 \times 10^6)}{.89}\left(\frac{.056}{6}\right)^2 = 8559 \text{ psi}$$

SIZE	CODE IDENT	DWG NO.
A	13499	649-2924-001
SCALE	REV	SHEET 5

Critical shear flow in panel

$q_{cr} = S_{cr} \cdot t$

$= 8559\,(.056) = 479$ lb/in

(b) <u>strength of filler plate</u> : 2024 T3 .093 thk.

$\left.\begin{array}{l} a = 12.25 \\ b = 5.12 \end{array}\right\}$ $a/b = 2.39$

$K \approx 9.5$

$S_{cr} = 9.5\left(\frac{10.5 \times 10^6}{.89}\right)\left(.093/5.12\right)^2 = 36{,}978$ psi

Critical shear flow

$q_{cr} = 36{,}978\,(.093) = 3439$ lb/in

Strenght of doubler : 2024 T3 .080 thk.

$\left.\begin{array}{l} a = 7.29 \\ b = 6.90 \end{array}\right\}$ $a/b = 1.05$

$K \approx 12.7$

$S_{cr} = 12.7\left(\frac{10.5 \times 10^6}{.89}\right)\left(\frac{.080}{6.9}\right)^2 = 20{,}141$ psi

$q_{cr} = 20{,}141\,(.08) = 1611$ lb/in

SIZE	CODE IDENT	DWG NO.
A	13499	649-2924-001
SCALE	REV	SHEET 6

(C) Circular Cutout

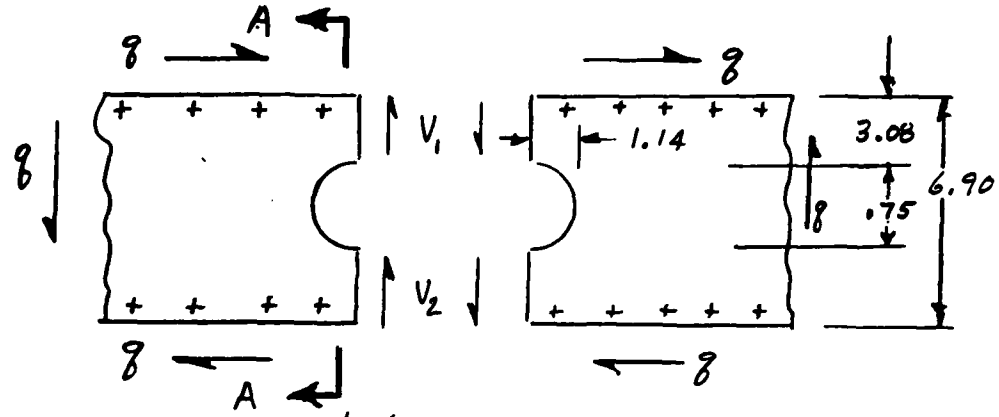

Assume area between holes ineffective

$V_1 = V_2 = \frac{1}{2} q (6.90) = 3.45 q$

$I_1 = I_2 = \frac{.229 (3.08)^3}{12} = .558 \text{ IN}^4$

MOM $M_1 = 3.45 (479)(1.14) = 1884$ IN-lb

This moment is greater than actual when considering the area between the two holes will actually resist bending.

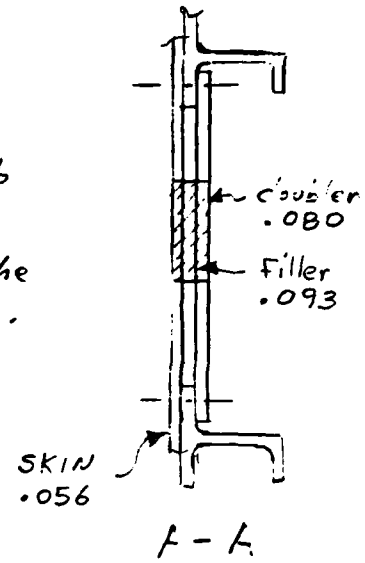

Maximum Bending Stress

$\sigma_B = \frac{1884 (3.08)}{.558} = 10,399$ PSI

$\sigma_{Allow} = 64$ KSI 2024 T3 (Ref 2)

M.S. $= \frac{64000}{10,339} - 1$ — — — — 5.19

SIZE	CODE IDENT	DWG NO.
A	13499	649-2924-001
SCALE	REV	SHEET 7

(d) CONSIDER PURE TENSION LOAD IN SKIN

Load lost by cutout in skin

72000 psi (.75)(.056) = 3024 lbs

Using filler as load carrying member

2024 T3 F_{tu} = 62 ksi F_{bru} = 125 ksi (Ref 2)

$$\sigma = \frac{3024}{(5.12 - .75)(.093)} = 7441 \text{ psi}$$

M.S. +

Use NAS 1097D4 rivets to transfer load. Ultimate Shear strength = 443 lbs, yield strength = 251 lbs

rivets required = $\frac{3024}{251} = 12$

rivets installed = 23

$$MS = \frac{23}{12} - 1 \quad \text{— — — — —} \quad .92$$

(e) Summary

The analysis shows that sufficient strength to carry all induced loads has been designed into the modification with the following Margins-of-Safety

M.S. (Tensile ult.) = 5.19

M.S. (Rivet attachment) = .92

SIZE	CODE IDENT	DWG NO.
A	13499	649-2924-001
SCALE	REV	SHEET 8

2.0 H.F. LONGWIRE INSTALLATION

Two H.F. longwire antennas are mounted on the upperside of the aircraft at F.S. 1126, L&RBL 44.56, W.L. 272 and connected to the tail structure (tail lifting point) at FS 1695, L&RBL 8.0 WL 450

Reference Drawings: 649-2824 Installation

SIZE	CODE IDENT	DWG NO.
A	13499	649-2924-001
SCALE	REV	SHEET 9

a) Geometry of installation

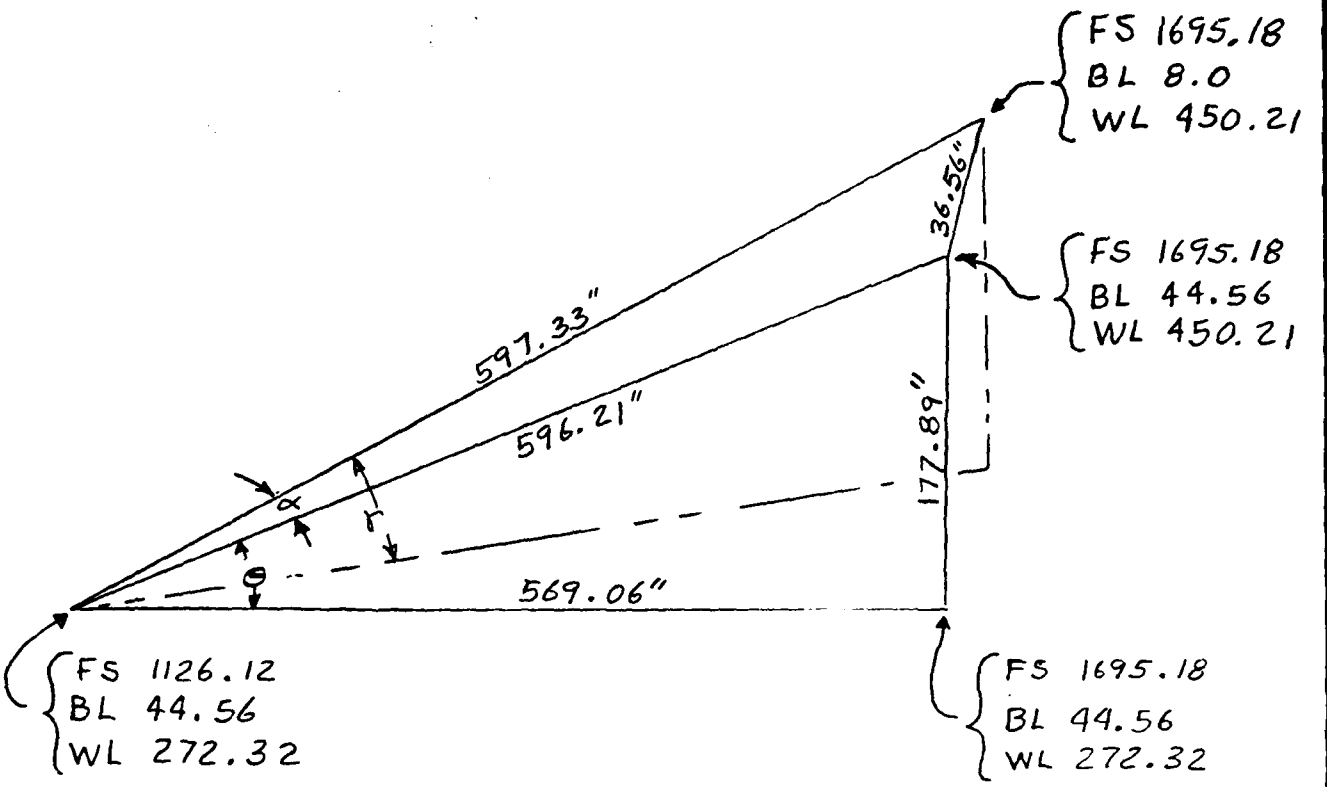

$$\theta = \sin^{-1} \frac{177.89}{596.21} = 17.36^\circ$$

$$\alpha = \sin^{-1} \frac{36.56}{597.33} = 3.51^\circ$$

$$\gamma = \sin^{-1} \frac{177.89}{597.33} = 17.33^\circ$$

SIZE	CODE IDENT	DWG NO.
A	13499	649-2924-001
SCALE	REV	SHEET 10

Vertical stabilizer lateral movement

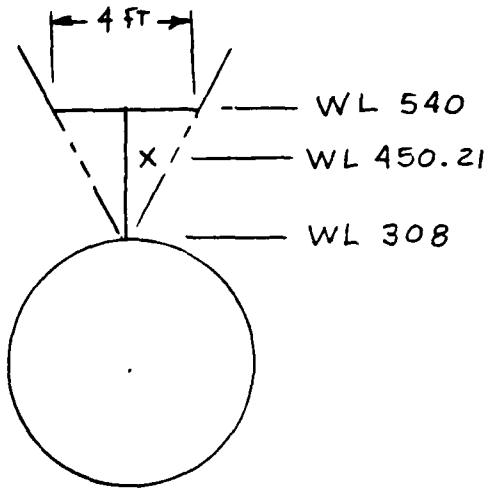

$$X = \frac{24(142.21)}{232}$$

$X = 14.71$ inches

Extension of antenna length

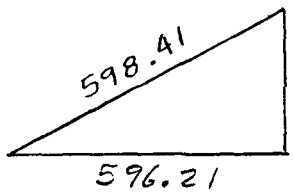

36.56 + 14.71

Tension takeup must move 598.41 − 597.33 = 1.08 inches

SIZE	CODE IDENT	DWG NO.
A	13499	649-2924-001
SCALE	REV	SHEET 11

Load on tail Fitting

$P_{Ten.\,max} = Tension \times \sin \alpha_{max}$

$= 109.57$ lbs

$P_{Shear\,max} = Tension \times \cos \alpha_{min.}$

$= 1274$ lbs

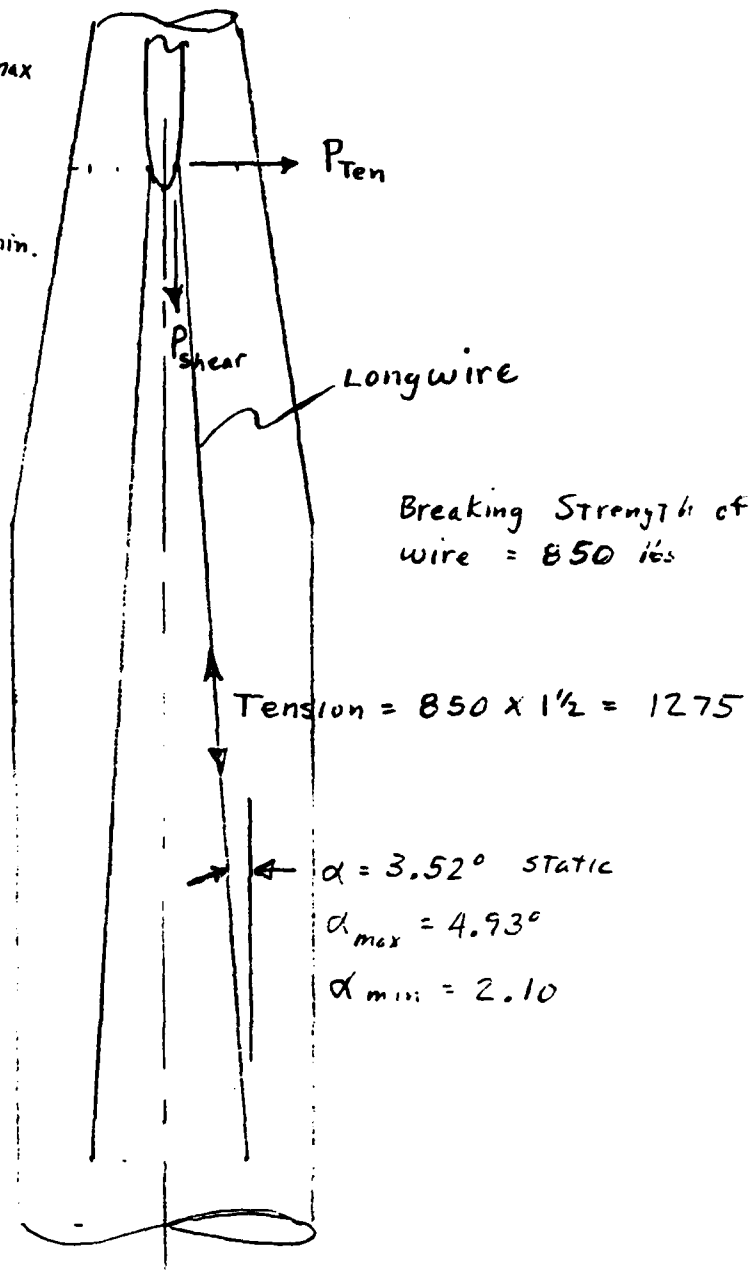

Plan View

SIZE	CODE IDENT	DWG NO.
A	13499	649-2924-001
SCALE	REV	SHEET 12

b) Tail Fitting P/N 649-2801

Mat'L. 2024-T351 QQ-A-250/4

F_{tu} = 62,000 psi (Ref 2)

F_{su} = 37,000 psi

F_{bru} = 115,000 psi (e/D=2)

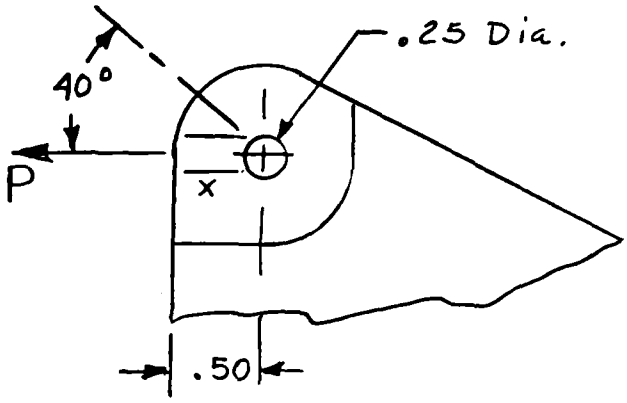

Bearing Factor 2.0
Fitting Factor 1.15

Bearing

$$f_{bru} = \frac{1275}{.10(.25)} = 51000 \text{ psi}$$

$$M.S. = \frac{115000}{51000(2)} - 1 = .13$$

Shear tearout

$$f_s = \frac{1275}{2(.10)(.50 - .25\cos 40°)} = 20665 \text{ psi}$$

$$M.S. = \frac{37000}{20665(1.15)} - 1 = .56$$

The fitting is secured to the tail structure with 4 - NAS 517-4 bolts 160,000 psi minimum U.T.S. the Longwire is secured to the fitting by one AN4 bolt. Single shear strength of 368 lbs.

SIZE	CODE IDENT	DWG NO.
A	13499	649-2924-001
SCALE	REV	SHEET 13

C) Antenna mast installation P/N 15186 C.I. 83044

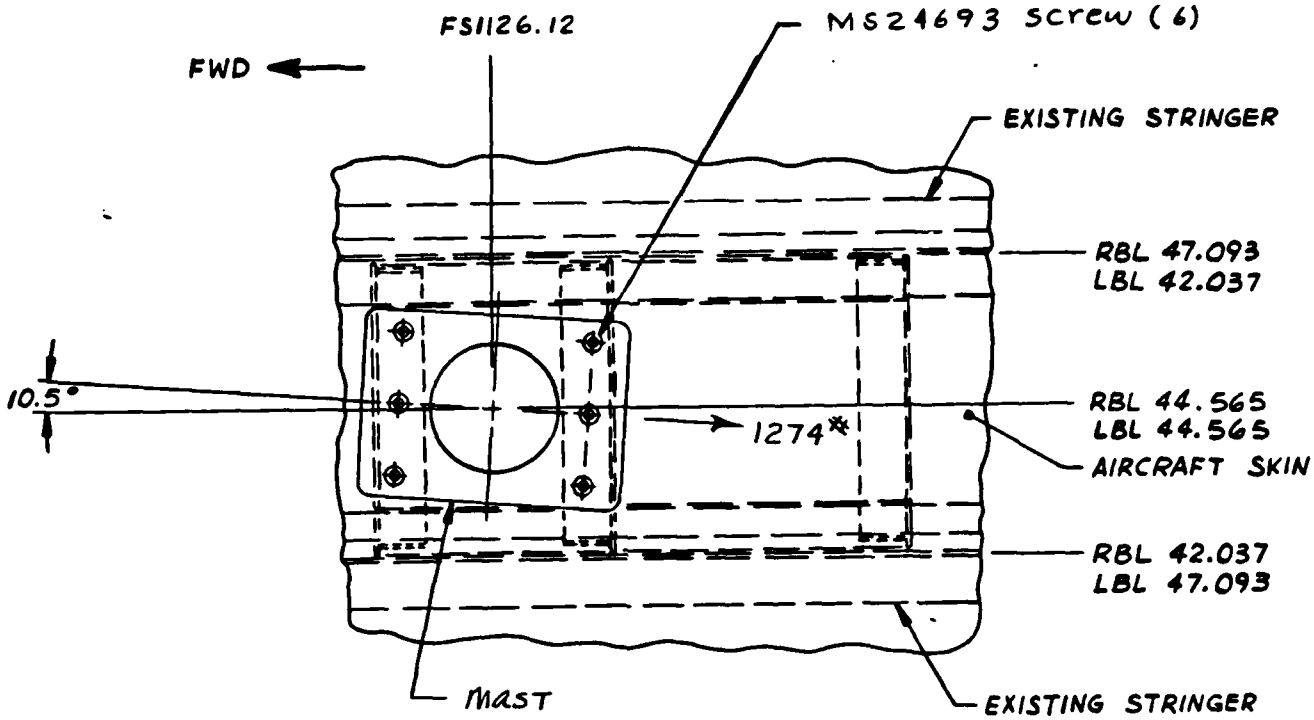

A 2.50 inch diameter hole is cut in the aircraft skin for the mast installation.

Skin : 7075-T6 clad .056 thk (Ref 1)

F_{tu} = 72000 psi (Ref 2)

Load capability lost

$P = 2.5(.056)(72000) = 10{,}080$ lbs.

Two doublers are used to carry load thru plus distribute the 1274 lb Longwire load into the skin and stringers.

Ref. drawings 649-2838 doubler
649-2839 doubler

SIZE	CODE IDENT	DWG NO.
A	13499	649-2924-001
SCALE	REV	SHEET 14

Doubler material 2024-T3 .080" thk

F_{tu} = 62000 psi (Ref 2)

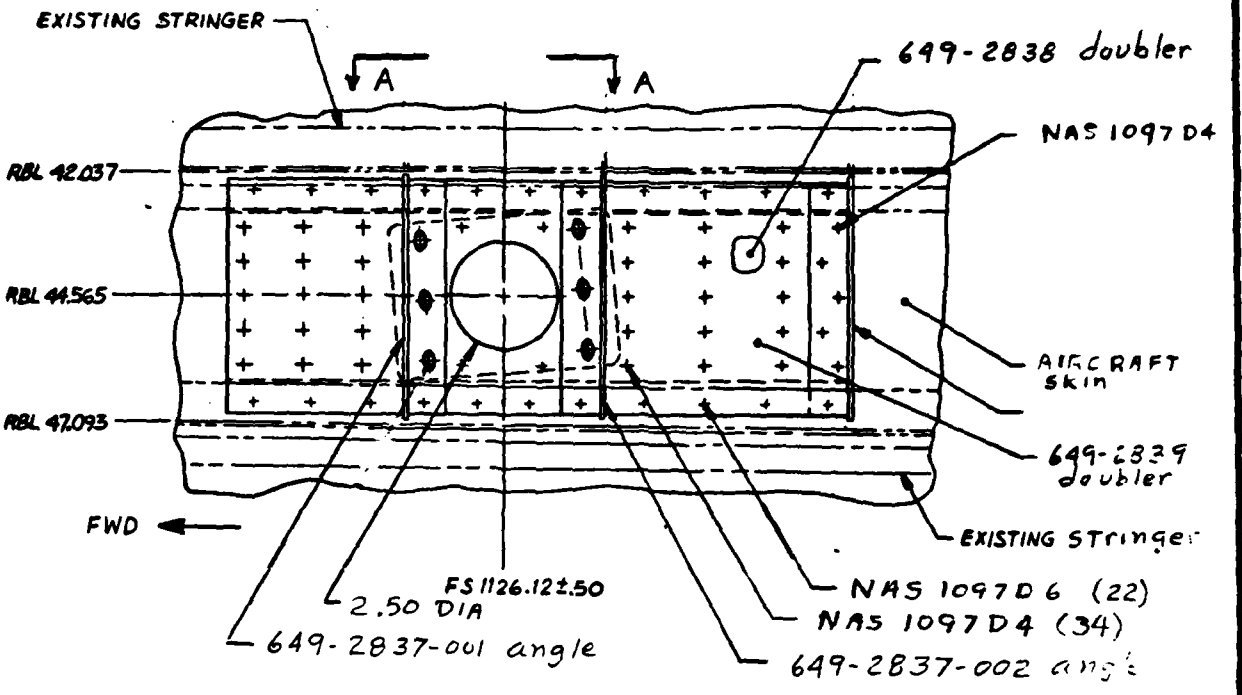

Tension load capability of doublers

$$P = [4.06 + 5.62 - 2(2.50)](.080)(62000) = 23213 \text{ lbs}$$

$$M.S. = \frac{23213}{10{,}080 + 1274} - 1 = 1.04$$

Rivet capability on .056 skin

NAS 1097 D4 442 lbs
NAS 1097 D6 977 lbs } Ref 2

15 (442) = 6630 lbs
8 (977) = 7816 lbs
14446 lbs

SIZE	CODE IDENT	DWG NO.
A	13499	649-2924-001
SCALE	REV	SHEET 15

$$MS = \frac{14446}{11,354} - 1$$ rivets .27

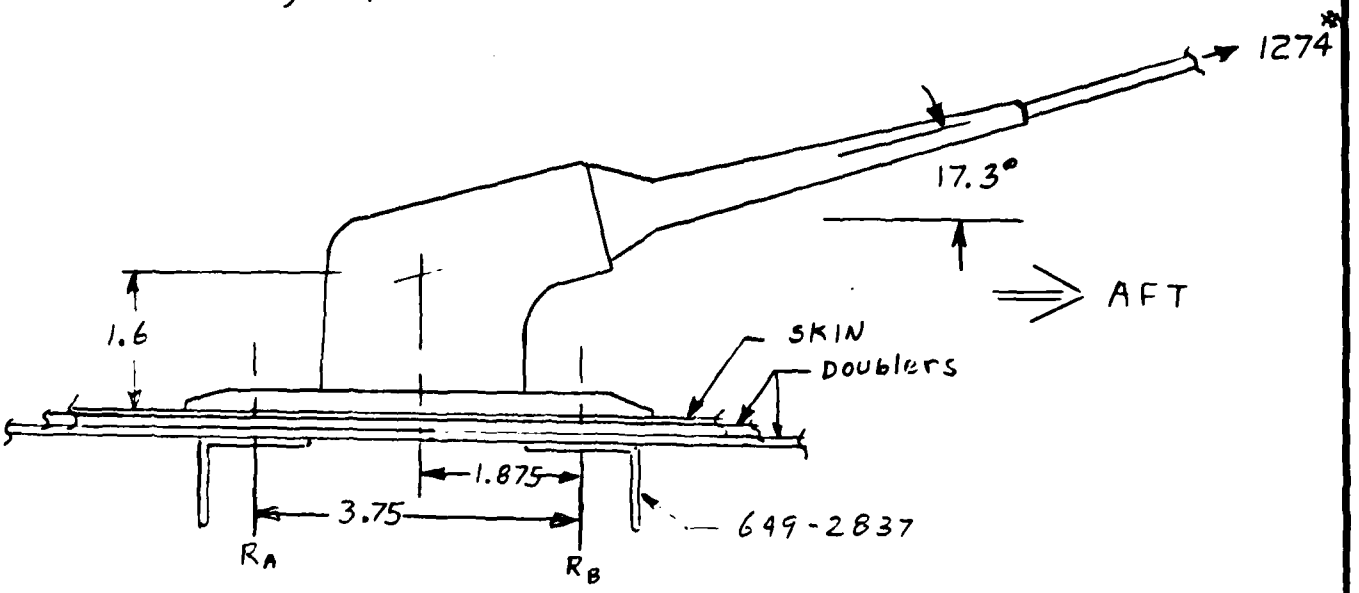

VIEW A-A

Shear load 1274 cos 17.3° = 1216 lbs

Tension load 1274 sin 17.3° = 379 lbs

Load on aft angle

$\Sigma M_{R_F} = 1216(1.6) - 379(1.875) - 3.75 R_F = 329$ lb

Fwd angle

ΣF_V $379 - 329 + R_F = 0$

$R_F = 50$ lbs Tension on bolts

$\frac{1274}{6} = 112$ lb Shear / Bolt on MS24693

SIZE	CODE IDENT	DWG NO.
A	13499	649-2924-001
SCALE	REV	SHEET 16

Analysis of angle 649-2839

AND 10134-1204

$I_{xx} = .0124\ in^4 \quad \bar{y} = .239$ inch.

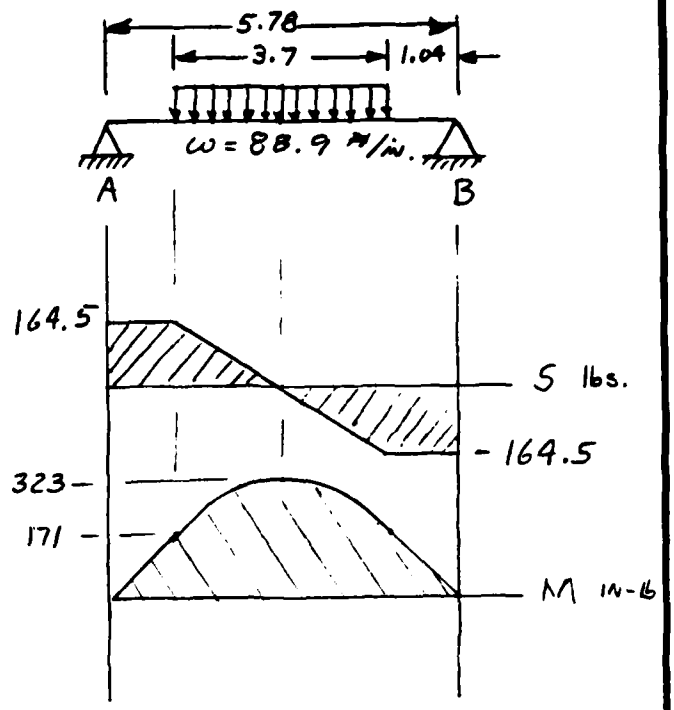

Bending Stress

$$\sigma_B = \frac{323\,(1-.239)}{.0124}$$

$\sigma_B = 19840$ psi M.S. +

SIZE	CODE IDENT	DWG NO.
A	13499	649-2924-001
SCALE	REV	SHEET 17

d) Coupler mount 649-2806

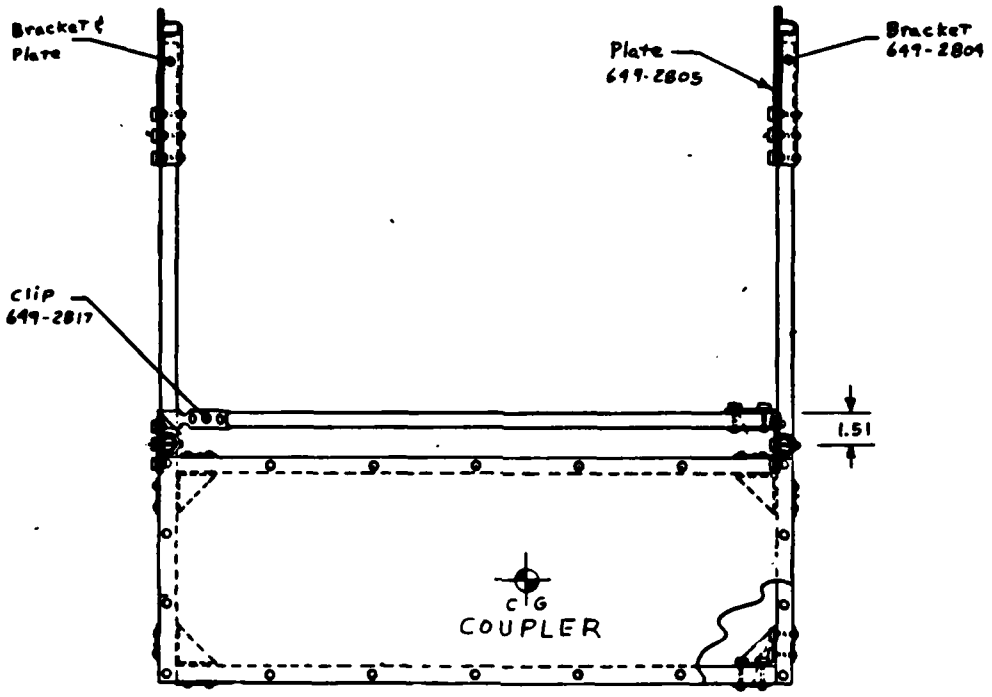

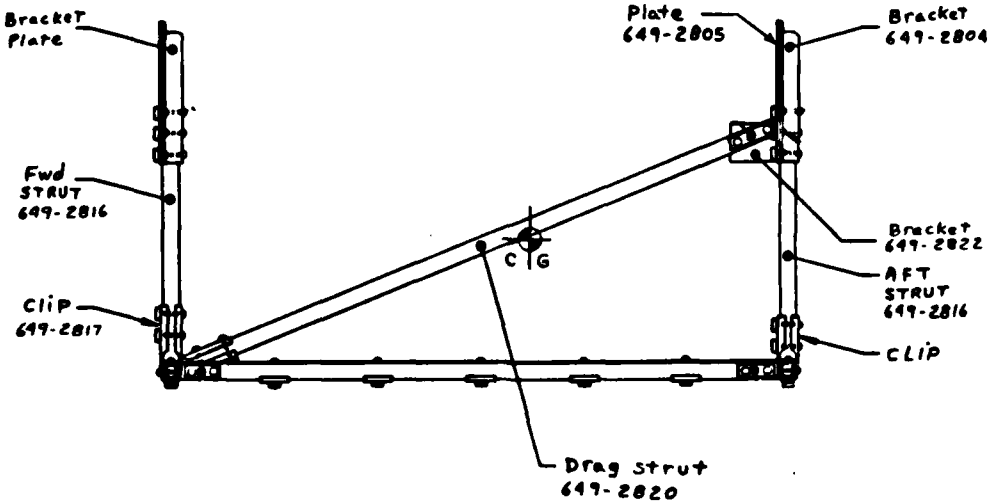

SIZE	CODE IDENT	DWG NO.
A	13499	649-2924-001
SCALE	REV	SHEET 18

d.1)

Design loads per MIL-A-8865

Fwd. 9.0 g

AFT. 1.5 g

VerT. 2.0 g up

4.5 g down

Lateral 1.5 g

Ultimate loads are 1.5 design

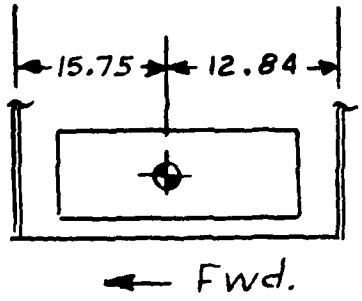

Load distribution on vertical supports

Fwd support $\frac{12.84}{28.59} V_B$

Fwd = .45 V_B

AFT = .55 V_B

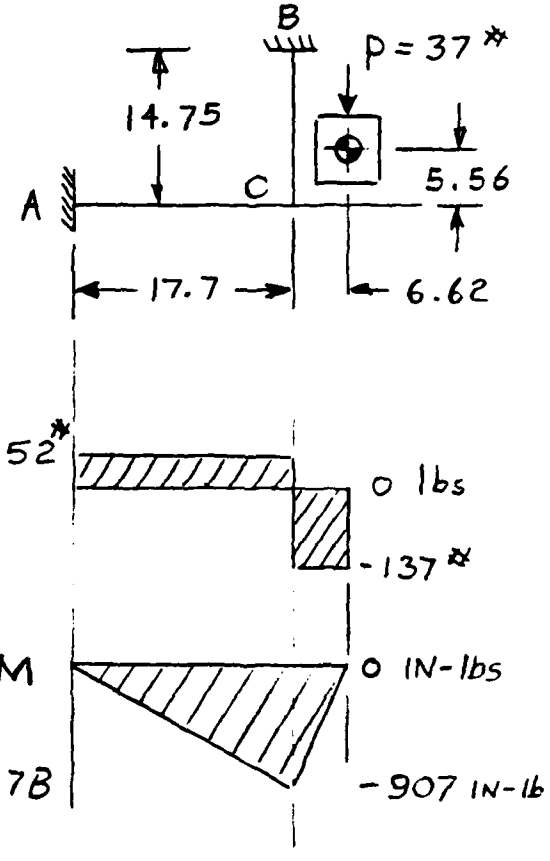

The aft vertical and horizontal strut takes the most Load. Therefore analysis will be done on aft struts.

Analysis for 6.75 g VerT. down:

$\Sigma M_A = .55(37)(24.32)(6.75) - 17.7B$

$B_V = 189$ lbs.

SIZE	CODE IDENT	DWG NO.
A	13499	649-2924-001
SCALE	REV	SHEET 19

section property of tubular support struts

Area = .168 IN^2

$I = .00958\ IN^4$

Stress at Joint C on horizontal strut

$$\sigma_B = \frac{907\ (.375)}{.00958} = 35,501\ psi$$

Matl properties 2024 T3 Tubing

$F_{tu} = 64,000\ psi$ (Ref 2)

$F_{su} = 39,000\ psi$

$$MS = \frac{64000}{35501} - 1$$ — Bending — .80

$$\tau = \frac{189}{.168} = 1125\ psi$$

$$MS = \frac{39000}{1125} - 1$$ — Shear — 33.7

SIZE	CODE IDENT	DWG NO.
A	13499	649-2924-001
SCALE	REV	SHEET 20

d.2)

Clip 649-2817

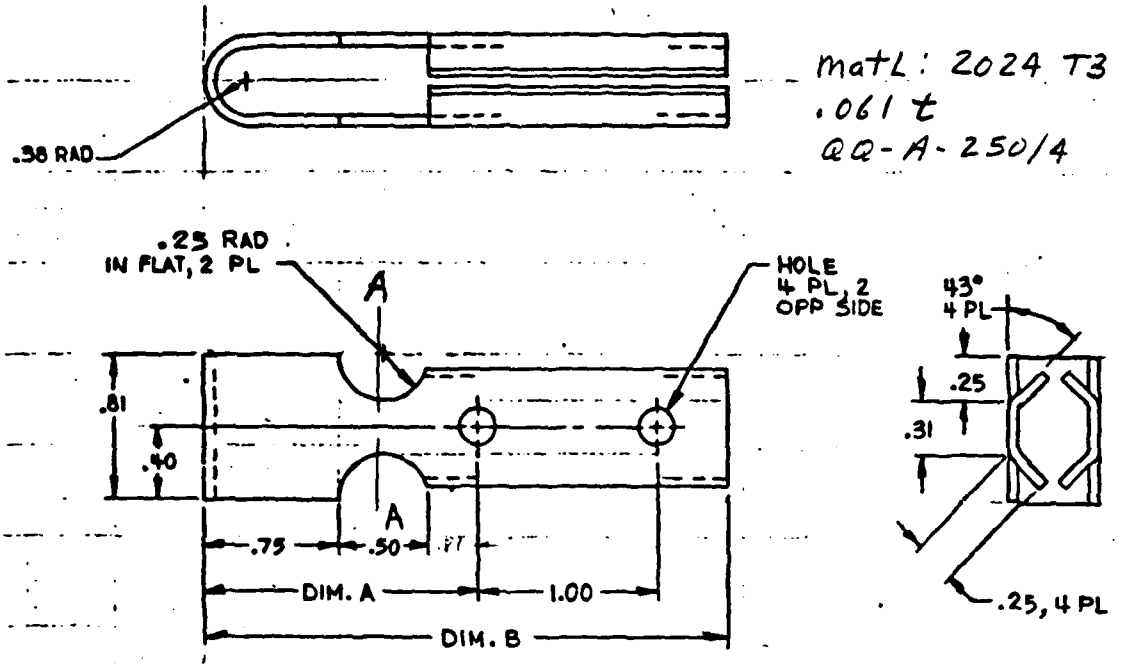

$F_{tu} = 64$ ksi (REF 2)

$F_{bru} = 104$ ksi $(e/d = 1.5)$

Tension across section A-A

$A_{net} = 2(.31)(.061) = .038 \text{ in}^2$

$P = 189 \text{ lbs } (1.15) \text{ fitting factor} = 217 \text{ lbs}$

$\sigma_T = \frac{217}{.038} = 5720 \text{ psi}$ MS = +

$\sigma_{Br} = \frac{217}{4(.187)(.061)} = 4756 \text{ psi}$ MS = +

SIZE	CODE IDENT	DWG NO.
A	13499	649-2924-001
SCALE	REV	SHEET 21

d.3) Load in aft Vertical Strut & rivet pattern

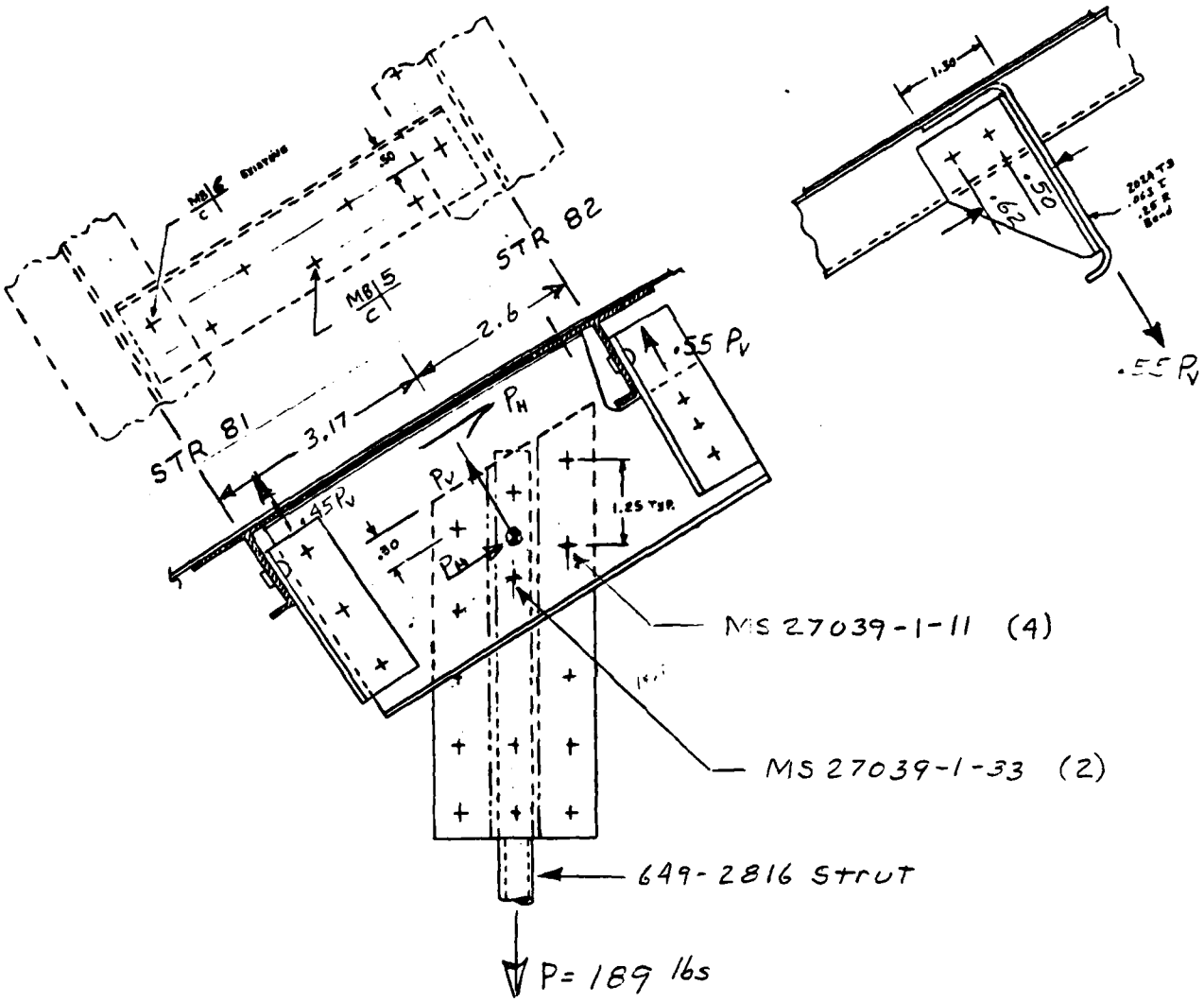

MS 27039-1 Screw Ten. allowable = 2500 lbs
Shear = 2125 lbs Single S...

2024 T3 bearing Allow = 104 Ksi (e/d = 1.5)

M.S. +

SIZE	CODE IDENT	DWG NO.
A	13499	649-2924-001
SCALE	REV	SHEET 22

$P_H = 189 \sin 31° = 97$ lbs

$P_V = 189 \cos 31° = 162$ lbs

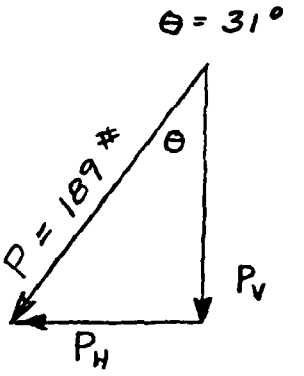

P_H is reacted into the aircraft skin by 2 NAS 1097D6 rivets (787 lbs single shear each) and 5 NAS 1097D5 rivets (615 lbs single shear)

Load per rivet $= \frac{97}{7} = 14$ lbs M.S. +

P_V on stringer #82

$162\left(\frac{3.17}{5.77}\right)(1.15 \text{ fitting factor}) = 102$ lbs

This load is transfered by 2 MS20470AD4 rivets

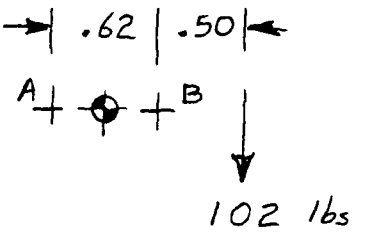

Excentric load on rivet

$P = \frac{.81\,(102)(.31)}{2\,(.31)^2} = 133$ lbs

Axial load $= \frac{102}{2} = 51$ lbs

Resultant max. load $= 133 + 51 = 184$ lbs

Shear strength of MS 20470AD4 into .063 mat'L. is 388 lbs (ref 2)

$M.S. = \frac{338}{184} - 1$

SIZE	CODE IDENT	DWG NO.
A	13499	649-2924-001
SCALE	REV	SHEET 23

d.4) ANALYSIS OF DRAG BRACE SYSTEM

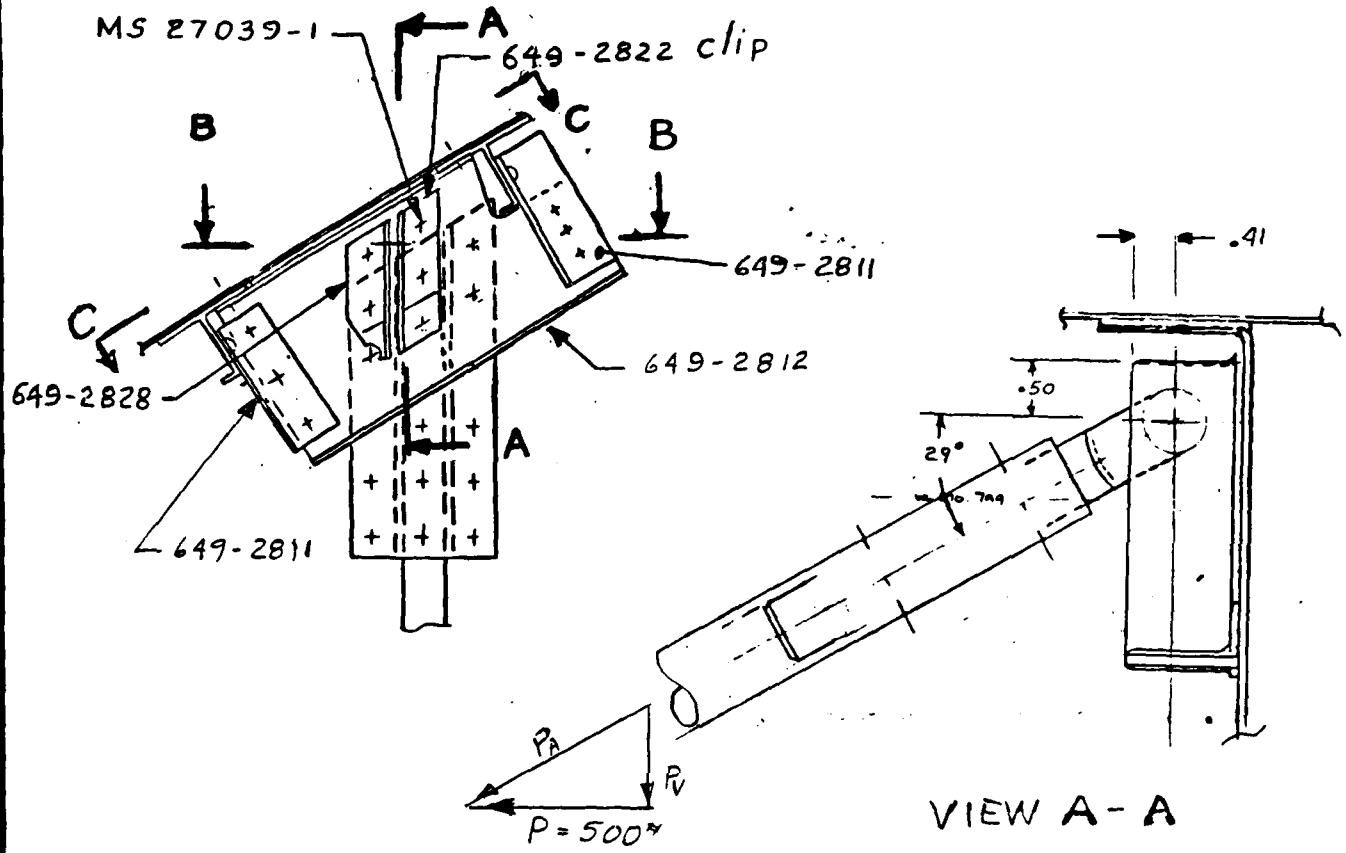

Fwd load = 37#(9 g)(1.5)
= 500 lbs

AXIAL LOAD IN DRAG BRACE

$P_A = \frac{500}{\cos 29°} = 572$ lbs

$\sigma_T = \frac{572}{.168} = 3403$ psi M.S. +

$P_V = 500 \tan 29° = 277$ lbs

$P_V = \frac{277}{5} = 55$ lb/bolt MS +

SIZE	CODE IDENT	DWG NO.
A	13499	649-2924-001
SCALE	REV	SHEET 24

Analysis of angle clip 649-2822 & 649-2828

Assume all 500 lb load goes into the top two MS27039-1 fasteners.

Assume a section .38 inches wide on each side of fastener resists load

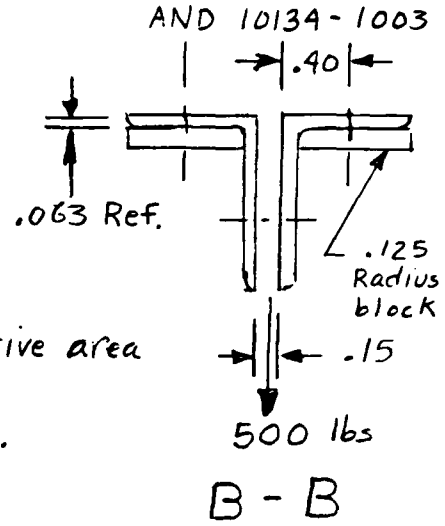

$$I = \frac{.75(.187)^3}{12} = 4.09 \times 10^{-4} \text{ effective area}$$

$$\sigma_B = \frac{250(.40)(.093)}{4.09 \times 10^{-4}} = 22{,}755 \text{ psi}$$

Mat'L strength for 2024-T3511 extrusion

F_{tu} = 54000 psi LT (Ref 2)

F_{su} = 29000 psi

F_{bru} = 108000 psi (e/D = 2)

$$MS = \frac{54000}{22755} - 1$$ Bending 1.37

Clip Shear at heel

$$\tau = \frac{250}{.063(.40)} = 4960 \text{ psi} \quad MS +$$

Bearing from 500# load

$$\sigma_{Br} = \frac{250}{(.187)(.063)} = 21{,}221 \text{ psi} \quad MS +$$

SIZE	CODE IDENT	DWG NO.
A	13499	649-2924-001
SCALE	REV	SHEET 25

Fore - Aft Drag load is carried into top skin by 2 ~ NAS 1097D6 rivets and 5 ~ NAS 1097D5 rivets

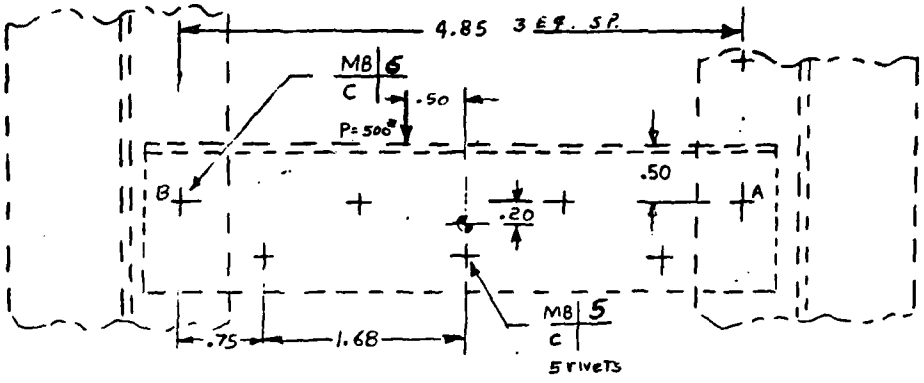

VIEW C - C

Torsional shear stress on rivets A & B

$$\tau_T = \frac{500(.50)(2.42)}{2[(2.43)(.028)+(1.702)(.019)+(.833)(.019)]+.3(.019)}$$

$$= \frac{605}{.236} = 2561 \text{ psi}$$

Axial shear stress:

$$\tau_A = \frac{500}{2(.028)+5(.019)} = 3311 \text{ psi}$$

Total shear stress on rivet B:

$$\tau_{tot} = 2561 + 3311 = 5872 \text{ psi} \qquad \text{M.S.} +$$

SIZE	CODE IDENT	DWG NO.
A	13499	649-2924-001
SCALE	REV	SHEET 26

The vertical load produced by the drag load is carried by the 649-2812 channel to the aircraft stringers thru the 649-2811 clips. the clips are secured to the stringers by 2 ~ MS 20470AD4 rivets.

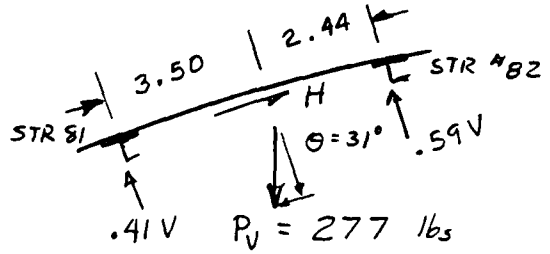

Vertical load to stringers

$V = 277 \cos 31° = 237$ lbs

Shear load to skin

$H = 277 \sin 31° = 143$ lbs

Stringer #82 has the greater load due to forward g loading.

Vertical load str #2 = .59 (237) = 140 lbs

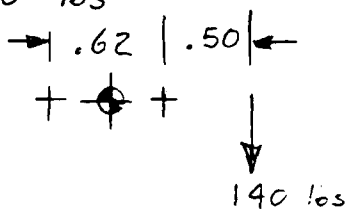

Excentric load on rivets

$$P = \frac{.81(140)(.31)}{2(.31)^2} = 183 \text{ lbs}$$

$$\text{Axial load} = \frac{140}{2} = 70 \text{ lbs}$$

Resultant maximum load = 253 lbs

Shear strength of MS 20470AD4 into .063 mat-
is 388 lbs (Ref 2)

$$M.S. = \frac{388}{253} - 1 = .53$$

SIZE	CODE IDENT	DWG NO.
A	13499	649-2924-001
SCALE	REV	SHEET 27

the H component of the vertical load is 143 lbs which is sheared into the skin by 7 rivets

$$\text{Stress on rivets} = \frac{143}{2(.028)+5(.019)} = 947 \text{ psi}$$

Load on Rivet B = 947 (.028) = 26.5 lbs

The resultant stress on rivet B (max. stressed rivet) is $\sqrt{(5872 \text{ psi})^2 + (947 \text{ psi})^2}$

R = 5948 psi

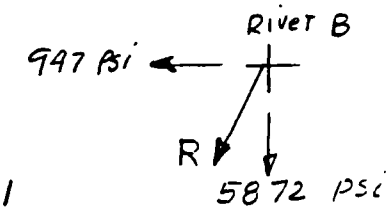

Allowable shear stress on 2017-T31 (D) rivet is 34000 psi (Ref 2)

$$M.S. = \frac{34000}{5948} - 1 = 4.72$$

(e) SUMMARY

The analysis shows that the design is of sufficient strength to carry all induced loads with the following minimum margins-of-safety

Tension	M.S. = 0.80	(P. 20)
Bearing	M.S. = 0.13	(P. 13)
Rivet attachment	MS = 0.27	(P. 16)

3.0 UPS-192 H.F. RECEIVE ANTENNA INSTL DWG. NO. 649-2797-001

The antenna is mounted on the bottom of the fuselage at F.S. 846, LBL 2.95. The modification consist of a doubler 4.25" x 8.00" x .080 thk. attached to the inside of the fuselage skin by 34 NAS 1097 D5 rivets. The is one .906 diameter hole drilled in the center of the doubler

Reference Drawings 649-2797 Installation
649-2796 Doubler

(a) Consider Compression load in bottom skin

Load lost by cutout in skin
skin is 7079 T6 Clad .071 thk (Ref 1)
F_{cy} = 62,000 psi (Ref 2)

$P_{lost} = 62000\,(.071)(.903 + .218 + .218)$

$P_{lost} = 5894$ lbs

Load capability of doubler
matl 2024 T3 .080 thk.
F_{cy} = 39000 psi

$P_{capability} = 39000\,(4.08_{eff} - 1.339)(.080) = 8552$ lbs

$M.S. = \frac{8552}{5894} - 1$ — — — — .45

SIZE	CODE IDENT	DWG NO.
A	13499	649-2924-001
SCALE	REV	SHEET 29

(b) Buckling of Sheet

critical buckling stress of original aircraft panel

$$\sigma_{cr} = \frac{\pi^2 k_c E}{12(1-\mu^2)} \left(\frac{t}{b}\right)^2$$

for $\frac{b}{t} = \frac{5.1}{.071} = 72$ $\quad K_c = 5.5$ $\quad$ (Ref 4 P. C5.3)

$\sigma_{cr} = 10,330$ psi

critical buckling of doubler

$b_w = 4.24 - .08 = 4.16$

$b_f = .75 - .04 = .71$

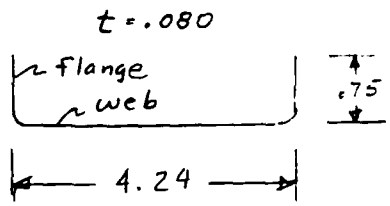

$\frac{b_f}{b_w} = .17$

$\frac{t_w}{t_f} = 1.0$

$K_w = 4.6$ $\quad$ (Ref 4 P. C6.3)

$$\sigma_{cr} = \frac{K_w \pi^2 E}{12(1-\mu^2)} \left(\frac{t_w}{b_w}\right)^2 = 16,801 \text{ psi}$$ in web

Compressive load on doubler

$$P_c = \frac{5894}{.946} = 13203 \text{ psi}$$

$$M.S. = \frac{16801}{13203} - 1 = .27$$

SIZE	CODE IDENT	DWG NO.
A	13499	649-2924-001
SCALE	REV	SHEET 30

(C) Rivets required to transfer load

NAS 1097D5 P = 755 (Ref 2)

$$\# \text{ rivets} = \frac{5894}{755} = 7.8 \text{ rivets}$$

No. rivets in design INSTL. = 17

$$MS = \frac{17}{8} - 1 \quad \text{———} \quad \text{———} \quad \text{———} \quad \text{———} \quad \boxed{1.12}$$

(d) Summary

The analysis of this installation shows that it is of sufficient strength to carry the load.

SIZE	CODE IDENT	DWG NO.
A	13499	649-2924-001
SCALE	REV	SHEET 31

4.0 4375-1C VHF/FM ANTENNA INSTALLATION

Two VHF/FM Antennas are mounted on the underside of the aircraft at F.S. 529.00 E L & R BL 48.5. A third antenna is mounted atop the Inflight Refueling housing at F.S. 507 ℄

Reference Drawings: 649-2884 Installation
649-2900 Installation
649-2898 Doubler

(a) 649-2900 Installation

The two lower antennas are in line with the flight of the aircraft and have a maximum drag of 2.55 lbs at 510 mph 30,000 ft altitude.

During take off and landing the antennas experience a side load due to the angle of attack with the airstream.

The cross sectional area of the antenna is 168 in^2 (1.17 ft^2)

Assume maximum angle of attack of 14° during take off rotation at M = 0.48

The antenna blade will be treated as a flat plate for side load analysis

Dynamic pressure at sea level

$C = 1118$ FPS

$\rho = .002378$ lb sec^2/ft^4

$V = 200(1.688) = 338$ ft/sec

$q = \frac{1}{2}(.002378)(338)^2 = 135.51$ lb/ft^2

SIZE	CODE IDENT	DWG NO.
A	13499	649-2924-001
SCALE	REV	SHEET 32

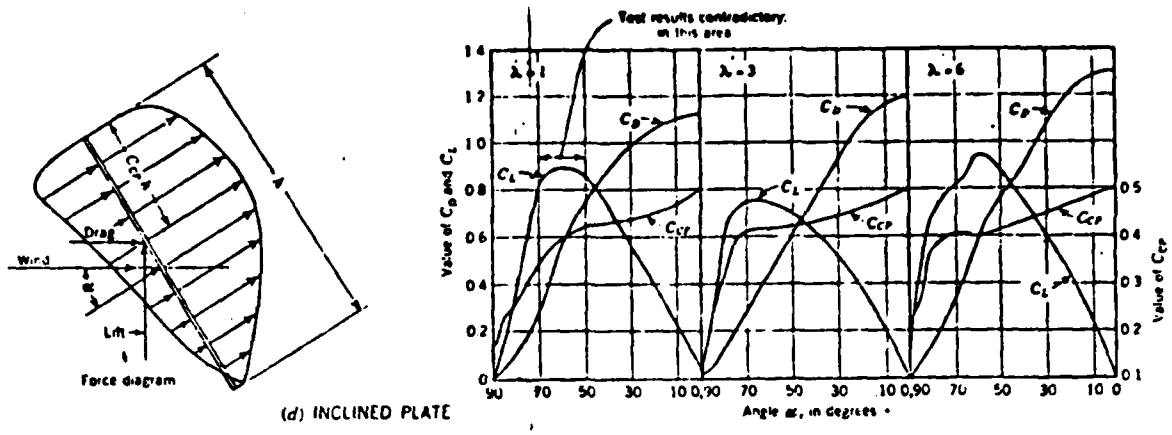

FIG. 5.—WIND PRESSURES ON ELEMENTARY BODIES

(FROM ASCE PAPER 3269)

For $\lambda = 1.6$ at $\alpha = 76°$

$C_D = .21 \quad C_L = .67 \quad C_{CP} = .51$

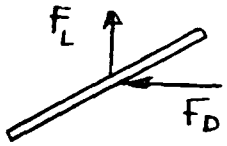

At takeoff rotation

$F_D = C_D A q$

$= .21\,(1.17)(135.5) = 33.3$ lbs

$F_L = C_L A q$

$= .67\,(1.17)(135.5) = 106.2$ lbs

At sea level, antenna cross section drag = 1.64 lbs

Center of pressure on the antenna $\bar{y} = 7.49''$

$F_D = 33.3 + 1.64 = 34.94$ lbs

$F_L = 106.2$ lbs

$M = (106.2 + 34.9)(7.49) = 1057$ in-lb

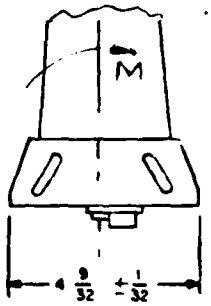

SIZE	CODE IDENT	DWG NO.
A	13499	649-2924-001
SCALE	REV	SHEET 33

Antenna attachment loads

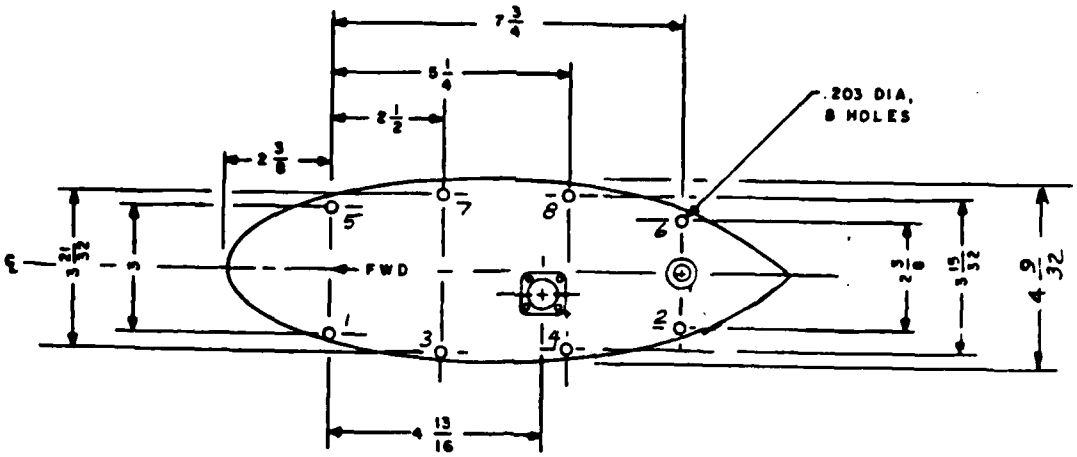

Assumption: The antenna stiffness is of such magnitude that the antenna tends to rotate as a rigid body about its edge

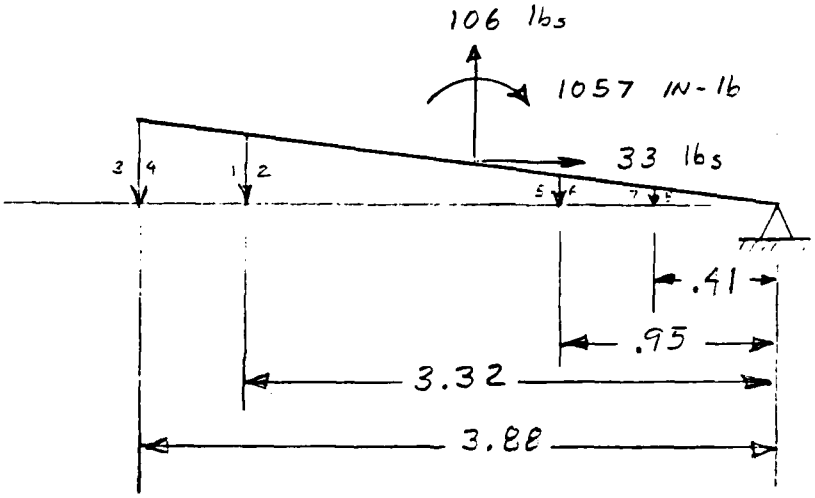

Bolt tension due to lift

$$F_L \frac{106}{8} = 13.25 \text{ lbs}$$

SIZE	CODE IDENT	DWG NO.
A	13499	649-2924-001
SCALE	REV	SHEET 34

Drag load Per bolt

$$F_D = \frac{33}{8} = 4.1 \text{ lbs}$$

Load due to Moment

$$M = \frac{2F}{3.88}\left[(3.88)^2 + (3.22)^2 + (.95)^2 + (.41)^2\right]$$

$$M = 13.66F$$

$$F = \frac{1057}{13.66} = 77.4 \text{ lbs}$$

Summation of loads

Bolts # 1 & 2 $\quad F_D = 4.1$ lbs

$$F_L = 13.25 + \frac{3.32}{3.88}(77.4) = 79.5 \text{ lbs}$$

Bolts #3 & 4 $\quad F_D = 4.1$ lbs

$$F_L = 13.25 + 77.4 = 90.6 \text{ lbs}$$

Bolts #5 & 6 $\quad F_D = 4.1$ lbs

$$F_L = 13.25 + \frac{.95}{3.88}(77.4) = 32.2 \text{ lbs}$$

Bolts #7 & 8 $\quad F_D = 4.1$ lbs

$$F_L = 13.25 + \frac{.41}{3.88}(77.4) = 21.4 \text{ lbs}$$

Pivot Point

$$\Sigma F_L = -223.7 + 106 = -117.7 \text{ lbs}$$

SIZE	CODE IDENT	DWG NO.
A	13499	649-2924-001
SCALE	REV	SHEET 35

Section properties of angle installation

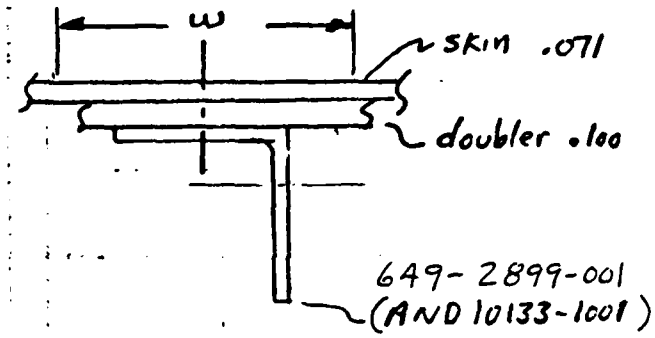

Effective width of skin

$\omega = 1.9\, t \sqrt{E/F_{cy}}$

skin : 7475-T761

$t = .071$ (Ref L.A.C. Dwg 3F30503)

$F_{cy} = 60{,}000$ psi (Ref 2)

$F_{tu} = 71{,}000$ psi

$\omega_{skin} = 1.9(.071)\sqrt{\frac{10^7}{60 \times 10^3}} = 1.74$ inches

Effective width of doubler

matl : 2024-T3 .100 thk

$F_{cy} = 37{,}000$ psi (Ref 2)

$F_{tu} = 62{,}000$ psi

$\omega_{Doubler} = 3.23$

Moment of inertia of skin, doubler and angle

$I = .0326\ IN^4$ $\bar{y} = .172$ inches

SIZE	CODE IDENT	DWG NO.
A	13499	649-2924-001
SCALE	REV	SHEET 36

Reactions on angle 649-2899-001 (worst Case)

'ANGLE' - 'ANTENNA ATTACHMENT'

```
*****************************************
*                                       *
*              ICES STRUDL-II           *
*       THE STRUCTURAL DESIGN LANGUAGE  *
*                                       *
*    CIVIL ENGINEERING SYSTEMS LABORATORY *
*    MASSACHUSETTS INSTITUTE OF TECHNOLOGY *
*          CAMBRIDGE, MASSACHUSETTS     *
*                                       *
*         14.24.47        09 OCT 80     *
*                                       *
*          UNIVAC 1100 SERIES  EXEC 8   *
*                VERSION 2.7            *
*                                       *
*****************************************
```

PREPARED BY MAARTEN VET

NODE COORDINATES

	X	Y	
1	0.00	0.00	SUPPORT
2	1.08	0.00	
3	4.74	0.00	
4	5.92	0.00	
5	5.82	0.00	SUPPORT

TYPE PLANE FRAME

MEMBER INCIDENCES

1	1	2
2	2	3
3	3	4
4	4	5

MEMBER PROPERTIES

1 TO 4 AX .5568 IZ .0326 SZ .0326

SIZE	CODE IDENT	DWG NO.
A	13499	649-2924-001
SCALE	REV	SHEET 37

```
CONSTANTS

E   1.00E7   ALL

G   3.80E6   ALL

LOADING  'DRAG'

NODE        LOADS

2           FORCE Y  +90.6
3           FORCE Y  +21.4
4           FORCE Y  -58.8
```

Assumptions : 1/2 pivot point load is taken by this angle

```
STIFFNESS ANALYSIS

     UNITS   KIPS

     OUTPUT DECIMAL   4

     LIST   FORCES,REACTIONS,DISPLACEMENTS   ALL

     OUTPUT DECIMAL   3

     LIST   MAX STRESS,EACH LOAD,ALL MEMBERS,SECT FR DS 0.00 0.20
```

SIZE	CODE IDENT	DWG NO.
A	13499	649-29[illegible]1-001
SCALE	REV	SHEET 38

```
*************************
*RESULTS OF LATEST ANALYSIS*
*************************
```

PROBLEM - ANGLE TITLE - ANTENNA ATTACHMENT

ACTIVE UNITS INCH KIPS RADIAN DEGF SECOND

ACTIVE STRUCTURE TYPE PLANE FRAME

ACTIVE COORDINATE AXES X Y

LOADING - DRAG

MEMBER FORCES

MEMBER	JOINT	FORCES AXIAL	SHEAR Y	SHEAR Z	MOMENTS TORSIONAL	BENDING Y	BENDING Z
1	1	.0000	-.0813				-.0628
1	2	.0000	.0813				-.0250
2	2	.0000	.0093				.0250
2	3	.0000	-.0093				.0090
3	3	.0000	.0307				-.0090
3	4	.0000	-.0307				.0176
4	4	.0000	-.0281				-.0176
4	5	.0000	.0281				-.0049

RESULTANT JOINT LOADS - SUPPORTS

JOINT		FORCES X FORCE	Y FORCE	Z FORCE	MOMENTS X MOMENT	Y MOMENT	Z MOMENT
1	GLO	.0000	-.0813				-.0628
5	GLO	.0000	.0281				-.0049
	TOTALS	.0000	-.0532				-.0677

RESULTANT JOINT DISPLACEMENTS - SUPPORTS

JOINT		DISPLACEMENTS X DISPL	Y DISPL	Z DISPL	ROTATIONS X ROT	Y ROT	Z ROT
1	GLO	.0000	.0000				.0000
5	GLO	.0000	.0000				.0000

RESULTANT JOINT DISPLACEMENTS - FREE JOINTS

JOINT		DISPLACEMENTS X DISPL	Y DISPL	Z DISPL	ROTATIONS X ROT	Y ROT	Z ROT
2	GLO	.0000	.0001				.0001
3	GLO	.0000	.0000				-.0000
4	GLO	.0000	.0000				-.0000

INTERNAL MEMBER RESULTS

MEMBER MAXIMUM STRESS FOR EACH LOADING

MEMBER 1

LOADING	STRESS MAX NORMAL	AT SECTION		MIN NORMAL	AT SECTION	
DRAG	1.927	.0000	FR	-1.927	.0000	FR

MEMBER 2

LOADING	STRESS MAX NORMAL	AT SECTION		MIN NORMAL	AT SECTION	
DRAG	.767	.0000	FR	-.767	.0000	FR

MEMBER 3

LOADING	STRESS MAX NORMAL	AT SECTION		MIN NORMAL	AT SECTION	
DRAG	.540	1.0000	FR	-.540	1.0000	FR

MEMBER 4

LOADING	STRESS MAX NORMAL	AT SECTION		MIN NORMAL	AT SECTION	
DRAG	.540	.0000	FR	-.540	.0000	FR

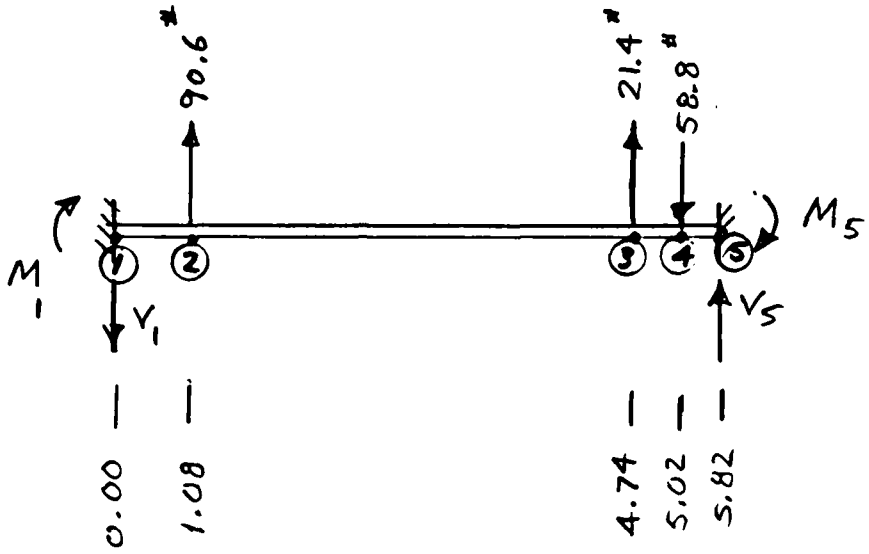

ASSUMPTION: THE NAS 623 FASTENERS ATTACHING THE ANGLE TO THE BEAM CAN TRANSFER MOMENT INTO THE A/C ZEE SECTION

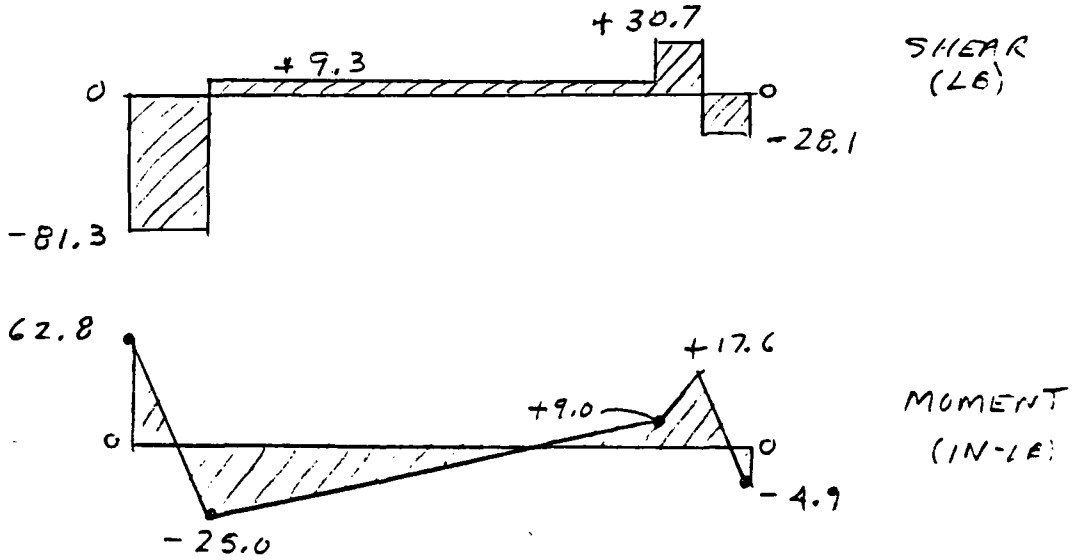

SIZE	CODE IDENT	DWG NO.
A	13499	649-2924-001
SCALE	REV	SHEET 41

Maximum bending Stress

$$\sigma_B = \frac{62.8\,(1.00)}{.0326} = 1926 \text{ psi}$$

$$MS = \frac{34000}{1926} - 1 \quad \text{— — — —} \quad \boxed{16.6}$$

End moment on clip 649-2895-002

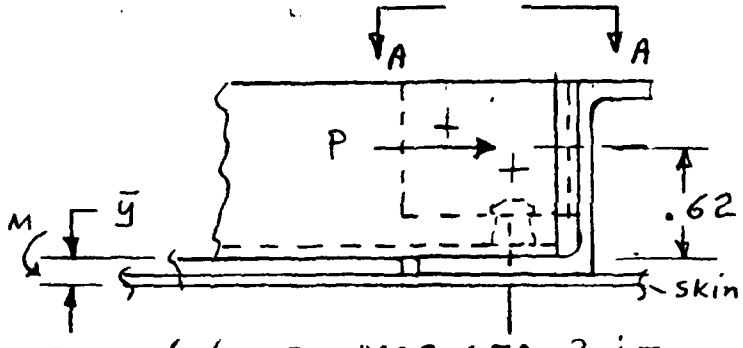

Moment M is reacted by 2 MS20470 RIVETS since the N.A. is even with bottom of doubler

$$P = \frac{62.8}{.62} = 101 \text{ lbs}$$

This load is reacted by 2 MS20470D4 which have a single shear strength of 442 lbs

$$MS = \frac{884}{101\,(1.5)} - 1 \quad \text{— — — —} \quad \boxed{4.8}$$

SIZE	CODE IDENT	DWG NO.
A	13499	649-2924-001
SCALE	REV	SHEET 42

Use .190 thick radius block to force P load into corner of Angle as a tension load rather than a bending load around angle corner.

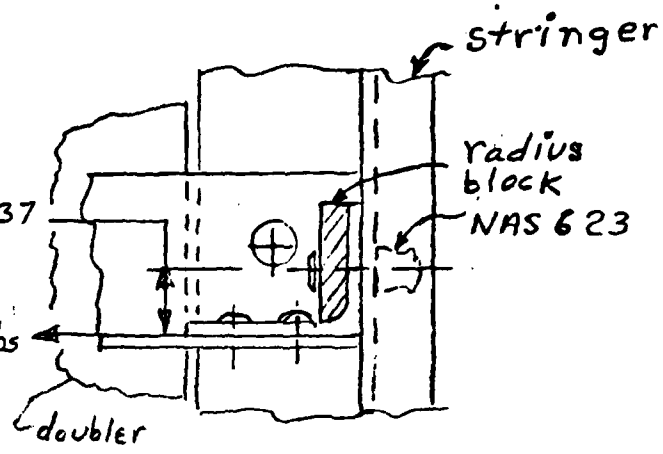

VIEW A-A

NAS 623-2 bolts will withstand an ultimate tensile strength of 1740 lbs

M.S. +

SIZE	CODE IDENT	DWG NO.
A	13499	649-2924-001
SCALE	REV	SHEET 43

(b) Connector CUTOUT in Skin

Load capability in skin lost

$P_{lost} = 71000\ (1.12 + .218 + .218)(.071) = 7844$ lbs

the 649-2898 doubler must pick up this load

$62000\ (3.95 - 1.12 - .218 - .218)(.10) = 14843$ lbs

$MS = \frac{14843}{7844} - 1$ — — — | .89

Rivets required to transfer load. Use NAS1097D5, ultimate single shear strength = 690 lbs (Ref 2)

$\frac{7844}{690} = 11.4 = 12$ rivets

Rivets installed:

12 NAS 1097D5	8280 lbs
4 NAS 1097AD3	1492 lbs
	9772 lbs

$MS = \frac{9772}{7844} - 1$ — — — | .24

SIZE	CODE IDENT	DWG NO.
A	13499	649-2924-001
SCALE	REV	SHEET 44

(C) 649-2884 INSTALLATION

No analysis will be run on the 437S-1C Installation on the inflight refueling housing since the antenna at all times is parallel to the line of flight, maximum drag load is 2.55 lbs and the I.R. housing does not carry major structural loads. Any side loads due to yaw maneuvers or roll maneuvers is transfered as shear into the skin and to the structural member of the housing.

Doubler installation (649-2888 doubler)

Load lost by cutout:

Skin: 7079-T6 clad .053 thk (Ref 1)

F_{tu} = 69000 psi (Ref 2)

$P = 69000(.75)(.053) = 2743$ lbs

Doubler 2024 T3 .063 thk

F_{tu} = 62000 psi

$P_{capability} = 62000(2.5-.75)(.063) = 6835$ lbs

$MS = \frac{6835}{2743} - 1$ ——— ——— ——— 1.49

Number MS20470AD4 rivets required to transfer Load. Single shear strength = 388 lbs (Ref 2)

Rivets Reqd $= \frac{2743}{388} = 7$

Rivets Installed = 10

$M.S. = \frac{10}{7} - 1$ ——— ——— ——— 0.43

SIZE	CODE IDENT	DWG NO.
A	13499	649-2924-001
SCALE	REV	SHEET 45

(d) Summary

The analysis of the 437S-1C antenna installation shows that it is of sufficient strength to carry the induced loads with the following margins-of-safety

Tensile M.S. = 0.89 (P. 44)

Rivet Shear M.S. = 0.24 (P. 44)

SIZE	CODE IDENT	DWG NO.
A	13499	649-2924-001
SCALE	REV	SHEET 46

5.0 SATCOM ANTENNA INSTALLATION

DWG. NO 649-2851

SIZE	CODE IDENT	DWG NO.
A	13499	649-2924-001
SCALE	REV	SHEET 47

Satcom skin doubler installation

Ref dwg 649-2851 Installation
649-2871 Doubler

the doubler is mounted on the pressure skin at F.S. 654, LBL 23.0

Strength lost in original skin by cutout

Aircraft skin 7079-T6 Clad .053 thk (Ref 1)

$F_{tu} = 69{,}000$ psi (Ref 2)

$P_{lost} = 69000(.053)(.765) = 2998$ lbs

Capability of doubler

2024 T3 .063 thk

$F_{tu} = 60{,}000$ psi (Ref 2)

$P_{capability} = 60{,}000(2.50 - .765)(.063) = 6558$ lbs

$MS = \frac{6558}{2998} - 1$ — — — 1.34

Rivets required to transfer load

Use 6 MS 20470D5 rivets

$P_{rivet} = 675$ lbs (Ref 2)

Rivets required $\frac{2998}{675} = 4.4$ rivets

$M.S. = \frac{6}{4.4} - 1$ — — — .36

SIZE	CODE IDENT	DWG NO.
A	13499	649-2924-001
SCALE	REV	SHEET 48

F.S. 663 Doubler installation

Ref dwg: 649-2918 doubler.

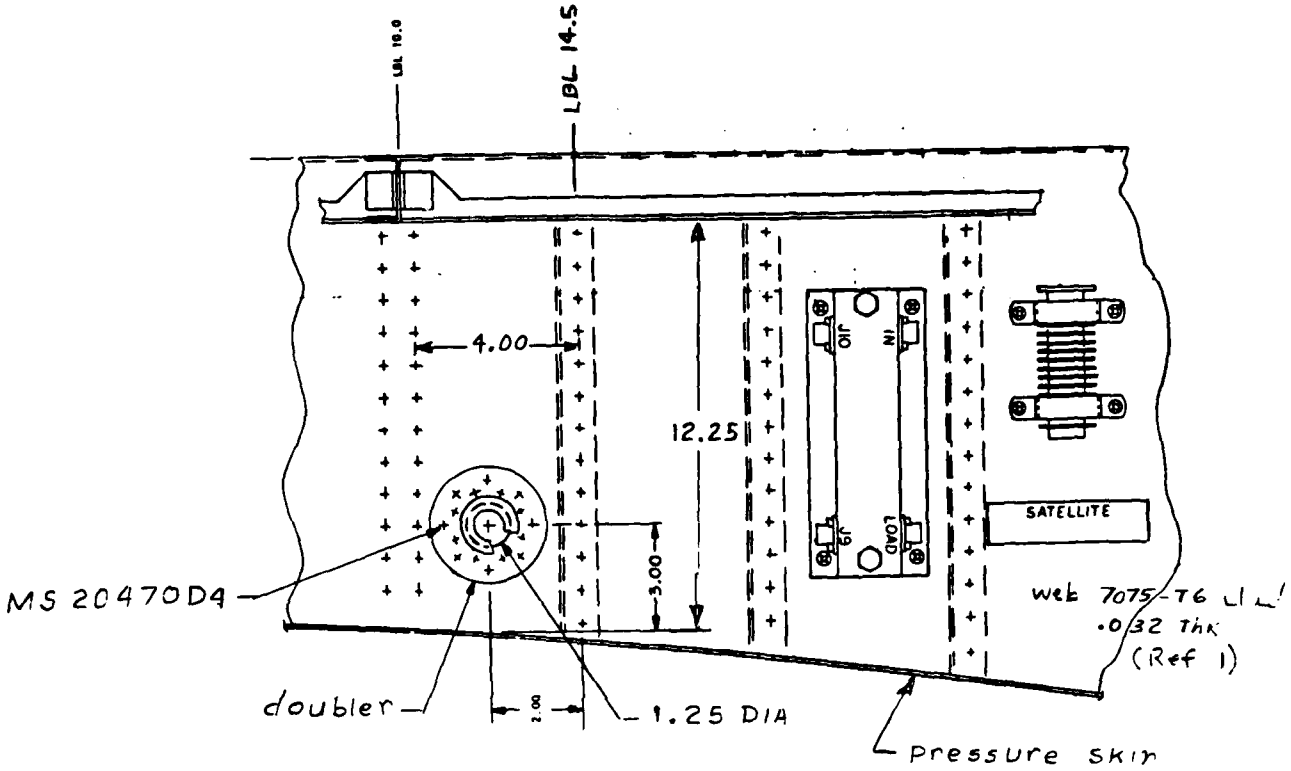

VIEW LWK AFT
F.S. 663

Buckling Stress in panel

$a = 12.25$

$b = 4$

$a/b = 3.06 \qquad K = 5.02 \qquad$ (Ref 4 Table 35-4)

$$S_{cr} = 5.02\left(\frac{10.3 \times 10^6}{.89}\right)\left(\frac{.032}{4}\right)^2 = 3718 \text{ psi}$$

$$q = 3718(.032) = 119 \text{ \#/inch}$$

SIZE	CODE IDENT	DWG NO.
A	13499	649-2924-001
SCALE	REV	SHEET 49

Tension load capability lost by cutout

web F_{tu} = 70,000 psi (Ref 2)

$P = 1.25(.032)(70000) = 2800$ lbs

Doubler: 2024 T3 F_{tu} = 62000 psi

Doubler strength = $.050(2.00)(62000) = 6200$ lbs

$M.S. = \frac{6200}{2800} - 1$ ——— ——— ——— ——— | 1.21

load transfer from web to doubler

MS 20470D4 rivet single shear strength for .032 mat'l

411 lbs (.964) = 396 lbs

8 rivets are used on each symetry line

$8(396) = 3168$ lbs

$MS = \frac{3168}{2800} - 1$ ——— ——— ——— ——— | 0.13

SIZE	CODE IDENT	DWG NO.
A	13499	649-2924-001
SCALE	REV	SHEET 50

SUMMARY

AN ANALYSIS WAS PERFORMED ON THE HONEYCOMBY AIRCRAFT PANEL, P/N 3W12010, TO DETERMINE ITS CAPABILITY TO REACT THE FORCES INDUCED INTO IT BY THE UHF ANTENNA DUE TO AERODYNAMIC LOADING. AS THE ANALYSIS PROGRESSED, IT WAS DETERMINED THAT THE ANTENNA SHOULD HAVE A ZERO ANGLE OF ATTACK, RATHER THAN THE 7-DEGREES USED IN THE ANALYSIS: THUS, THE ANALYSIS IS SOMEWHAT TRUNCATED. HOWEVER, THE ANALYSIS DID SHOW THAT THE PANEL IS MORE THAN ADEQUATE TO TAKE OUT THE SHEAR AND BENDING LOADS INDUCED BY THE ANTENNA.

1.0 ANALYTICAL MODEL

AN ANALYTICAL MODEL WILL BE MADE OF THE HONEYCOMB AIRCRAFT PANEL TO WHICH THE ANTENNA ATTACHES (SEE LAYOUT THAT FOLLOWS). THE PANEL WILL BE MODELED USING TRIANGULAR FLAT-PLATE ELEMENTS HAVING BOTH SHEAR AND BENDING CAPABILITY. THE ANTENNA WAS ASSUMED TO BE ATTACHED DIRECTLY TO THE AIRCRAFT PANEL WITH THROUGH-BOLT INSERTS IMPLANTED BETWEEN THE HONEYCOMB FACINGS AT EACH ATTACHMENT LOCATIONS. IT SHOULD BE NOTED THAT IN THIS ATTACHMENT CONFIGURATION, THE ANTENNA HAS A NORMAL ANGLE OF ATTACK OF 7-DEGREES.

BECAUSE THE STRUCTURAL COMPUTER CODE USED IN THE ANALYSIS DOES NOT HAVE A HONEYCOMB FINITE ELEMENT IN ITS LIBRARY, AN OVERLAY ELEMENT WAS FABRICATED FOR THIS PURPOSE WITH THE TRUE SHEAR THICKNESS AND AN ARTIFICIAL FLEXURAL MODULUS SO AS TO YIELD THE CORRECT FLEXURAL STIFFNESS.

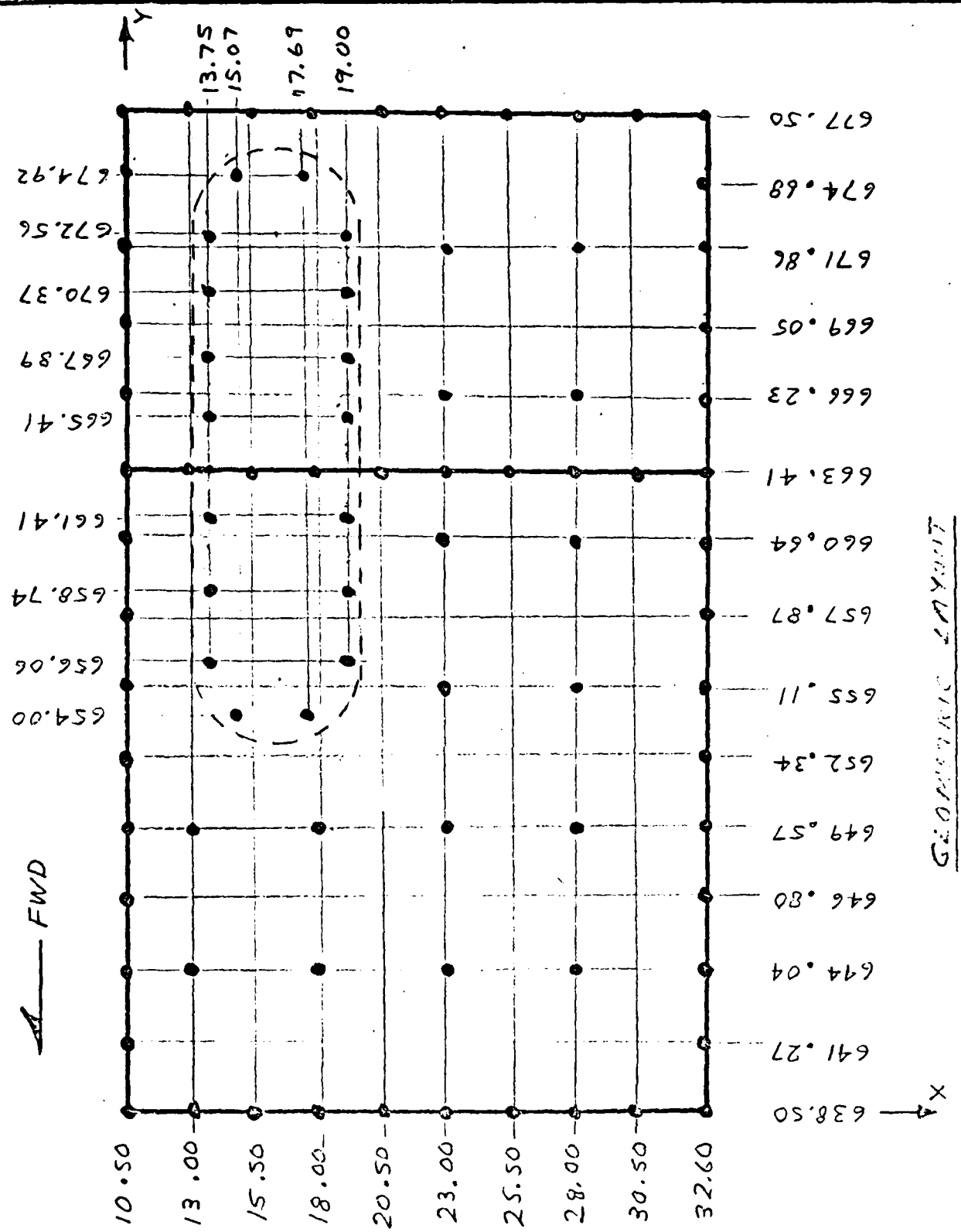

GEOMETRIC LAYOUT

FIG. 10

SIZE	CODE IDENT	DWG NO.
A	13499	649-2924-001
SCALE	REV	SHEET 53

'C141-B' 'DM C34-3/B UHF ANTENNA MOD'

```
*********************************************
*                                           *
*              ICES STRUDL-II               *
*       THE STRUCTURAL DESIGN LANGUAGE      *
*                                           *
*    CIVIL ENGINEERING SYSTEMS LABORATORY   *
*    MASSACHUSETTS INSTITUTE OF TECHNOLOGY  *
*          CAMBRIDGE, MASSACHUSETTS         *
*                                           *
*         08.18.46        30 JUL 80         *
*                                           *
*          UNIVAC 1100 SERIES  EXEC 8       *
*                 VERSION 2.7               *
*                                           *
*********************************************
```

PREPARED BY MAARTEN VET

NODE	COORDINATES X	Y	Z
1	32.60	638.50	289.70
2	32.60	641.27	290.59
3	32.60	644.04	291.48
4	32.60	646.80	293.37
5	32.60	649.57	293.26
6	32.60	652.34	294.14
7	32.60	655.11	295.03
8	32.60	657.87	295.92
9	32.60	660.64	296.81
10	32.60	663.41	297.70
11	32.60	666.23	298.16
12	32.60	669.05	298.62
13	32.60	671.86	299.08
14	32.60	674.68	299.54
15	32.60	677.50	300.00
16	10.50	638.50	295.00
17	10.50	641.27	295.36
18	10.50	644.04	295.71
19	10.50	646.80	296.07
20	10.50	649.57	296.42
21	10.50	652.34	296.78
22	10.50	655.11	297.13
23	10.50	657.87	297.49
24	10.50	660.64	297.84
25	10.50	663.41	298.20
26	10.50	666.23	298.56
27	10.50	669.05	298.92
28	10.50	671.86	299.28

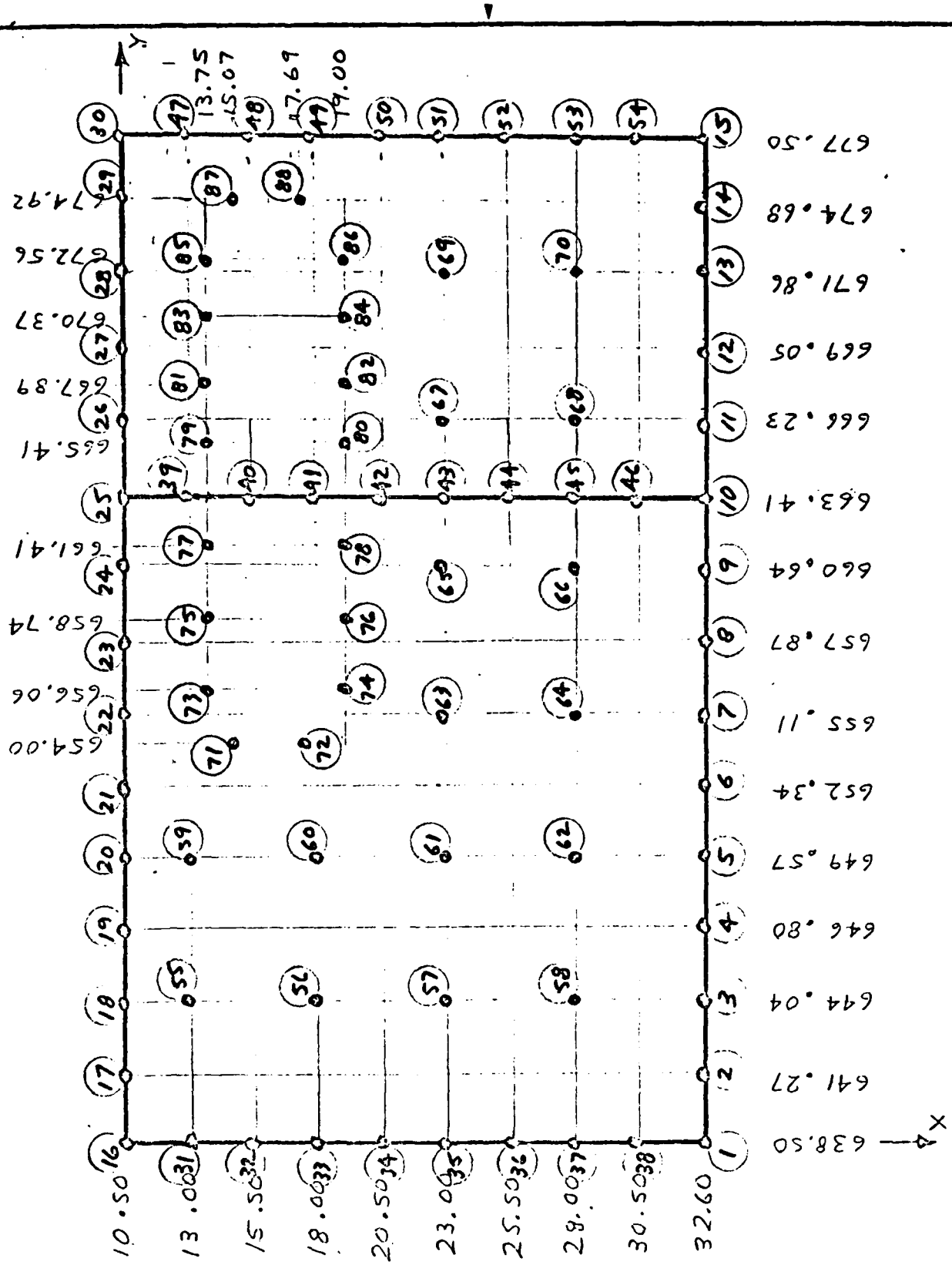

SIZE	CODE IDENT	DWG NO.
A	13499	649-2924-001
SCALE	REV	SHEET 55

29	10.50	674.68	299.64
30	10.50	677.50	300.00
31	13.00	638.50	294.95
32	15.50	638.50	294.90
33	18.00	638.50	294.70
34	20.50	638.50	294.50
35	23.00	638.50	294.10
36	25.50	638.50	293.70
37	28.00	638.50	292.75
38	30.50	638.50	291.80
39	13.00	663.41	298.20
40	15.50	663.41	298.20
41	18.00	663.41	298.20
42	20.50	663.41	298.15
43	23.00	663.41	298.10
44	25.50	663.41	298.00
45	28.00	663.41	297.90
46	30.50	663.41	297.80
47	13.00	677.50	300.00
48	15.50	677.50	300.00
49	18.00	677.50	300.00
50	20.50	677.50	300.00
51	23.00	677.50	300.00
52	25.50	677.50	300.00
53	28.00	677.50	300.00
54	30.50	677.50	300.00
55	13.00	644.04	295.67
56	18.00	644.04	295.48
57	23.00	644.04	294.99
58	28.00	644.04	293.92
59	13.00	649.57	296.39
60	18.00	649.57	296.26
61	23.00	649.57	295.88
62	28.00	649.57	295.08
63	23.00	655.11	296.77
64	28.00	655.11	296.25
65	23.00	660.64	297.66
66	28.00	660.64	297.42
67	23.00	666.23	298.86
68	28.00	666.23	298.32
69	23.00	671.86	299.62
70	28.00	671.86	299.16
71	15.07	654.00	296.70
72	17.69	654.00	297.03
73	13.75	656.06	296.88
74	19.00	656.06	297.03
75	13.75	658.74	297.48
76	19.00	658.74	297.42
77	13.75	661.41	297.94
78	19.00	661.41	297.92
79	13.75	665.41	298.51
80	19.00	665.41	298.51
81	13.75	667.89	298.90
82	19.00	667.89	298.90
83	13.75	670.37	299.29
84	19.00	670.37	299.29
85	13.75	672.56	299.63

SIZE	CODE IDENT	DWG NO.
A	13499	649-2924-001
SCALE	REV	SHEET 56

86	19.00	672.56	299.63	
87	15.07	674.92	300.00	
88	17.69	674.92	300.00	
101	32.60	638.50	289.50	SUPPORT
102	32.60	641.27	290.09	SUPPORT
103	32.60	644.04	290.98	SUPPORT
104	32.60	646.80	292.87	SUPPORT
105	32.60	649.57	292.76	SUPPORT
106	32.60	652.34	293.64	SUPPORT
107	32.60	655.11	294.53	SUPPORT
108	32.60	657.87	295.42	SUPPORT
109	32.60	660.64	296.31	SUPPORT
110	32.60	663.41	297.20	SUPPORT
111	32.60	666.23	297.61	SUPPORT
112	32.60	669.05	298.12	SUPPORT
113	32.60	671.86	298.58	SUPPORT
114	32.60	674.68	299.04	SUPPORT
115	32.60	677.50	299.50	SUPPORT
116	10.50	638.50	294.50	SUPPORT
117	10.50	641.27	294.86	SUPPORT
118	10.50	644.04	295.21	SUPPORT
119	10.50	646.80	295.57	SUPPORT
120	10.50	649.57	295.72	SUPPORT
121	10.50	652.34	296.28	SUPPORT
122	10.50	655.11	296.63	SUPPORT
123	10.50	657.87	296.99	SUPPORT
124	10.50	660.64	297.34	SUPPORT
125	10.50	663.41	297.70	SUPPORT
126	10.50	666.23	298.06	SUPPORT
127	10.50	669.05	298.42	SUPPORT
128	10.50	671.86	298.78	SUPPORT
129	10.50	674.68	299.14	SUPPORT
130	10.50	677.50	299.50	SUPPORT
131	13.00	638.50	294.45	SUPPORT
132	15.50	638.50	294.40	SUPPORT
133	18.00	638.50	294.20	SUPPORT
134	20.50	638.50	294.00	SUPPORT
135	23.00	638.50	293.60	SUPPORT
136	25.50	638.50	293.20	SUPPORT
137	28.00	638.50	292.25	SUPPORT
138	30.50	638.50	291.30	SUPPORT
139	13.00	663.41	297.70	SUPPORT
140	15.50	663.41	297.70	SUPPORT
141	18.00	663.41	297.70	SUPPORT
142	20.50	663.41	297.65	SUPPORT
143	23.00	663.41	297.60	SUPPORT
144	25.50	663.41	297.50	SUPPORT

145	28.00	663.41	297.40	SUPPORT
146	30.50	663.41	297.30	SUPPORT
147	13.00	677.50	299.50	SUPPORT
148	15.50	677.50	299.50	SUPPORT
149	18.00	677.50	299.50	SUPPORT
150	20.50	677.50	299.50	SUPPORT
151	23.00	677.50	299.50	SUPPORT
152	25.50	677.50	299.50	SUPPORT
153	28.00	677.50	299.50	SUPPORT
154	30.50	677.50	299.50	SUPPORT

NODE	RELEASES				
101 TO 115	FORCE	Y		MOMENT	Y
116 TO 130	FORCE	X	Y	MOMENT	Y
131 TO 138	FORCE	X	Y	MOMENT	X
139 TO 146	FORCE	X			
147 TO 154	FORCE	X	Y	MOMENT	X

TYPE BENDING

ELEMENT INCIDENCES

1	2	38	1
2	38	58	37
3	58	38	2
4	58	2	3
5	4	58	3
6	58	4	62
7	62	4	5
8	6	62	5
9	62	6	64
10	64	6	7
11	8	64	7
12	64	8	66
13	66	8	9
14	66	9	46
15	66	46	45
16	46	9	10
17	11	46	10
18	11	68	45
19	46	68	45
20	12	68	11
21	68	12	70
22	70	12	13
23	14	70	13
24	70	14	54
25	54	14	15
26	70	54	53
27	58	36	37
28	57	36	58
29	36	57	35
30	58	61	57
31	61	58	62
32	64	61	62
33	61	64	63
34	64	65	63
35	65	64	66
36	65	66	44
37	65	44	43
38	44	66	45
39	68	44	45
40	68	67	44
41	44	67	43
42	68	69	67
43	69	68	70
44	70	52	69
45	52	70	53
46	69	52	51
47	57	34	35
48	56	34	57
49	34	56	33
50	61	56	57
51	56	61	60
52	61	72	60
53	72	61	63
54	72	63	74
55	63	76	74
56	63	65	76
57	76	65	78
58	42	41	78
59	78	65	42
60	42	65	43
61	67	42	43
62	42	67	80
63	41	42	80
64	67	82	80
65	67	69	82
66	82	69	84
67	84	69	86
68	69	50	66
69	50	69	51
70	86	50	88
71	88	50	49
72	56	32	33
73	55	32	56
74	32	55	31
75	56	59	55
76	59	56	60
77	60	71	59
78	71	60	72
79	72	73	71
80	74	73	72
81	74	75	73
82	75	74	76
83	78	75	76
84	75	78	77
85	77	78	48
86	40	78	41
87	40	39	77
88	40	79	39
89	80	79	40
90	80	40	41
91	80	81	79
92	81	80	82
93	84	81	82
94	81	84	83
95	84	85	83
96	85	84	86
97	85	86	88
98	85	88	87

SIZE	CODE IDENT	DWG NO.
A	13499	649-2924-001
SCALE	REV	SHEET 59

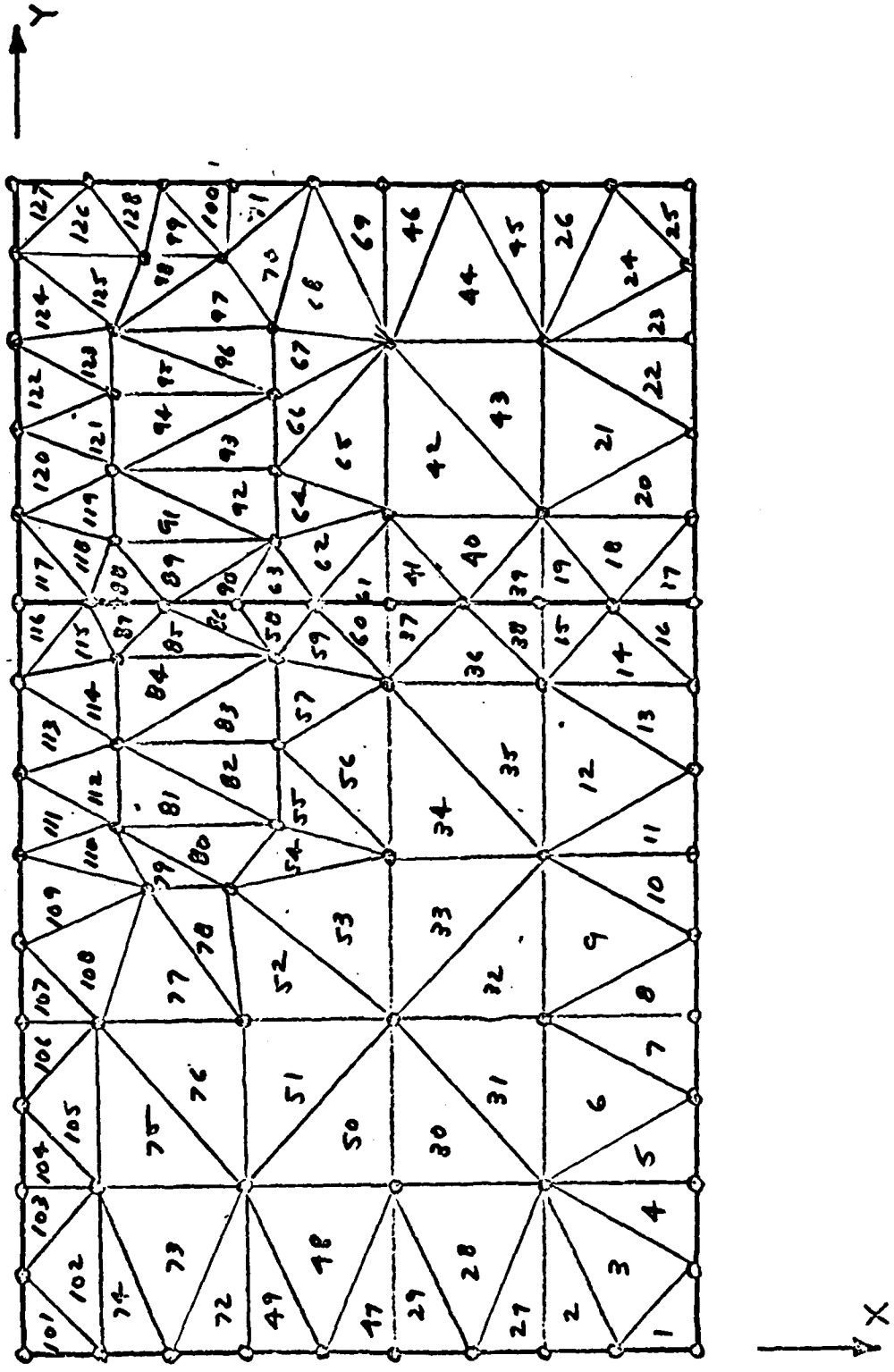

SIZE	CODE IDENT	DWG NO.
A	13499	649-2924-001
SCALE	REV	SHEET 60

99	88	48	87
100	48	88	49
101	31	17	16
102	31	55	17
103	17	55	18
104	55	19	18
105	55	59	19
106	19	59	20
107	59	21	20
108	59	71	21
109	21	71	22
110	22	71	73
111	73	23	22
112	23	73	75
113	75	24	23
114	24	75	77
115	39	24	77
116	24	39	25
117	39	26	25
118	26	39	79
119	81	26	79
120	26	81	27
121	27	81	83
122	27	83	28
123	28	83	85
124	85	29	28
125	87	29	85
126	29	87	47
127	29	47	30
128	47	87	48

TYPE SPACE FRAME

MEMBER INCIDENCES

201	1	101
202	2	102
203	3	103
204	4	104
205	5	105
206	6	106
207	7	107
208	8	108
209	9	109
210	10	110
211	11	111
212	12	112
213	13	113
214	14	114
215	15	115
216	16	116
217	17	117
218	18	118
219	19	119
220	20	120
221	21	121
222	22	122
223	23	123
224	24	124
225	25	125
226	26	126
227	27	127
228	28	128
229	29	129
230	30	130
231	31	131
232	32	132
233	33	133
234	34	134
235	35	135
236	36	136
237	37	137
238	38	138
239	39	139
240	40	140
241	41	141
242	42	142
243	43	143
244	44	144
245	45	145
246	46	146
247	47	147
248	48	148
249	49	149
250	50	150
251	51	151
252	52	152
253	53	153
254	54	154

```
ELEMENT          PROPERTIES

1 TO 128         TYPE  'SBCT'   THICKNESS  .024


MEMBER           PROPERTIES

201 TO 254       AX .0228  IX .0002  IY .0001  IZ .0001


CONSTANTS

 E    1.14E10     ALL
 G    3.80E6      ALL
 POISSON  .33     ALL

 E    1.00E7      201 TO 254
 G    3.80E6      201 TO 254
 POISSON  .33     201 TO 254
```

SIZE	CODE IDENT	DWG NO.
A	13499	649-2924-001
SCALE	REV	SHEET 63

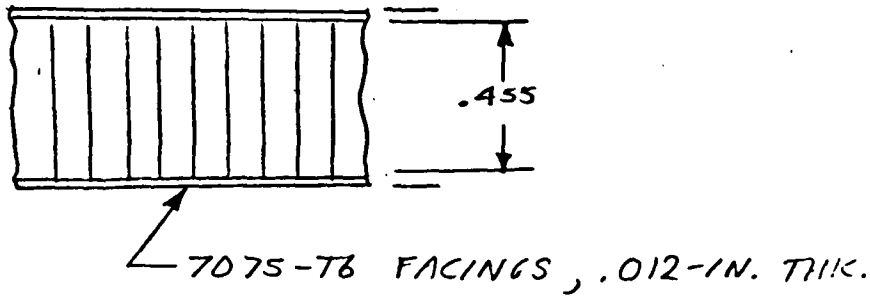

SHEAR PROPERTIES

THICKNESS = (2)(.012) = .024 - IN

$G = 3.8 \times 10^6$ - PSI

FLEXURAL PROPERTIES

$$EI = (10.0 \times 10^6)(2)(.012 \times 1.000)(.2335)^2$$

$$= .01309 \times 10^6 \text{ LB-IN}^2/\text{IN}$$

EQUIVALENT ISOTROPIC PLATE .024-IN. THK

$$E_E \left[\frac{1}{12}(1.000)(.024)^3\right] = 1.152\, E_E \times 10^{-6}$$

EQUIVALENT FLEXURAL MODULUS

$$E_E = \frac{.01309 \times 10^6}{1.152 \times 10^6} = 1.136 \times 10^{10} \text{ PSI}$$

SIZE	CODE IDENT	DWG NO.
A	13499	649-2924-001
SCALE	REV	SHEET 64

LOADING 'DRAG'

NODE	LOADS			
71,72	FORCE Y	+5.05	FORCE Z	+39.36
73,74	FORCE Y	+5.05	FORCE Z	+34.63
75,76	FORCE Y	+5.05	FORCE Z	+32.38
77,78	FORCE Y	+5.05	FORCE Z	+30.13
79,80	FORCE Y	+5.05	FORCE Z	+26.77
81,82	FORCE Y	+5.05	FORCE Z	+24.69
83,84	FORCE Y	+5.05	FORCE Z	+22.60
85,86	FORCE Y	+5.05	FORCE Z	+20.76
87,88	FORCE Y	+5.05	FORCE Z	-59.32

STIFFNESS ANALYSIS REDUCE BAND ROOT

OUTPUT DECIMAL 3

UNITS KIPS

LIST REACTIONS,DISPLACEMENTS,STRESSES ALL

2.0- AERODYNAMIC CALCULATIONS

2.1- MAXIMUM DYNAMIC PRESSURE

REFERENCE: T.O. 1C-141A-1, FIGURE 5-8.

- MAX. PERMISSIBLE VELOCITY ABOVE 23,000-FT. ALTITUDE IS $M = 0.85$
- MAX PERMISSIBLE VELOCITY BELOW 23,000-FT. ALTITUDE IS 380-KNOTS

2.1.1 - AT 23,000-FT ALTITUDE

$$C = 1025 - FT/SEC$$

$$\rho = .002378 \left(\frac{P}{P_0}\right)\left(\frac{T_0}{T}\right)$$

$$= (.002378)(.4046)\left(\frac{1}{.8419}\right) = .001143 \ LB\text{-}SEC^2/FT^4$$

$$v = (1025)(.85) = 871 \ FT/SEC$$

$$q_\infty = \frac{1}{2}\rho v^2$$

$$= \frac{1}{2}(.001143)(871)^2 = 434 - LB/FT^2$$

2.1.2- AT SEA LEVEL

$$C = 1117 - FT/SEC$$

$$\rho = .002378 \ LB\text{-}SEC^2/FT^4$$

SIZE	CODE IDENT	DWG NO.
A	13499	649-2924-001
SCALE	REV	SHEET 66

$$v = (380)(1.689)$$
$$= 642 \text{ FT/SEC} \qquad (M = .57)$$

$$q_\infty = \frac{1}{2}(.002378)(642)^2 = 490 - LB/FT^2$$

2.2 - DRAG & LIFT FORCES

ASSUMPTIONS:

- AS A WORST-CASE, ASSUME THAT THE ANGLE-OF-ATTACK ON THE ANTENNA IS 10°.
- THE SAUCER PORTION OF THE ANTENNA WILL BE TREATED AS A FLAT DISC, RATHER THAN AS AN AIRFOIL.
- THE ENTIRE ANTENNA IS OUTSIDE THE BOUNDARY LAYER. (CONSERVATIVE)

2.2.1 - SAUCER

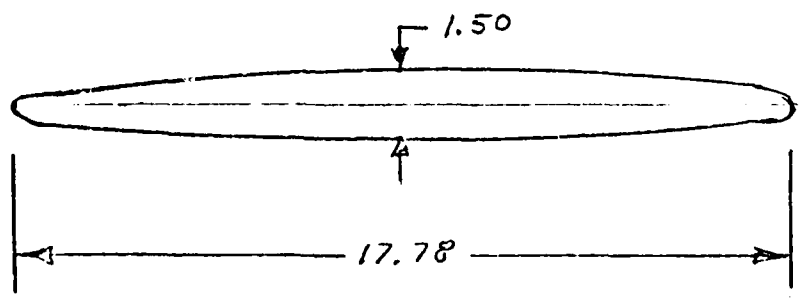

$$\text{AREA} = \frac{\pi}{4}\left(\frac{17.78}{12}\right)^2 = 1.724 - FT^2$$

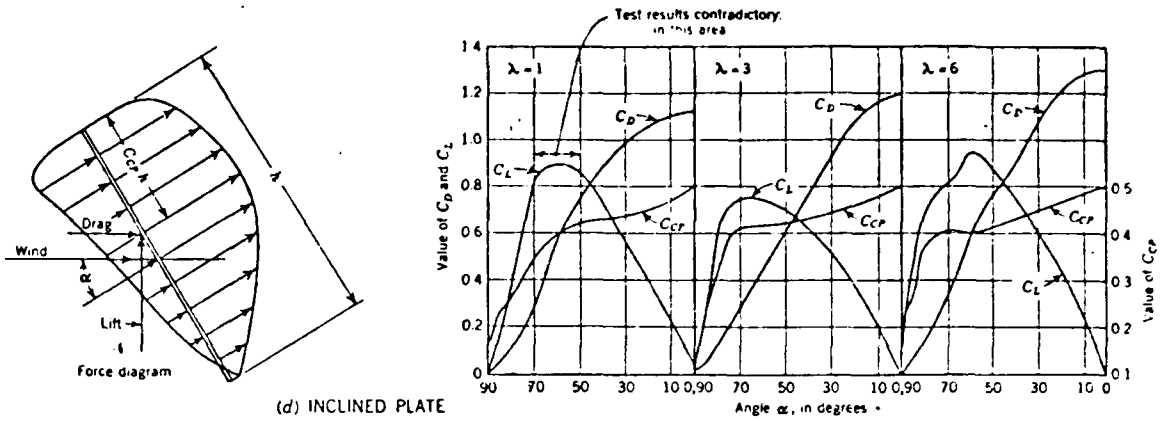

FIG. 5.—WIND PRESSURES ON ELEMENTARY BODIES

(FROM ASCE PAPER 3269)

FOR $\lambda = 1$ (A SQUARE PLATE) THE DRAG COEFFICIENT IS ALMOST THE SAME AS FOR A CIRCULAR PLATE OF THE SAME AREA.

FROM THE CURVES ABOVE (FOR $\lambda = 1$), AT $\alpha = 90^\circ$:

$C_D = .10$

$C_L = .40$

$C_{CP} = .26$

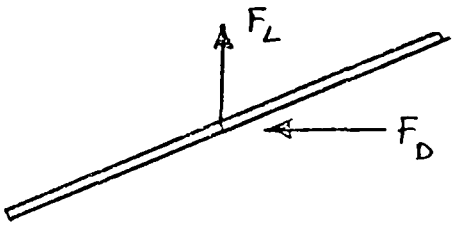

(a) <u>AT 23,000-FT ALTITUDE</u>

$$F_D = C_D A q_\infty$$

$$= (.10)(1.724)(434) = 74.8 \text{-LB.}$$

$$F_L = C_L A q_\infty$$

$$= (.40)(1.724)(434) = 299.3 \text{-LB.}$$

SIZE	CODE IDENT	DWG NO.
A	13499	649-2924-001
SCALE	REV	SHEET 68

$\bar{X} = C_{CP} D = (.26)(17.78) = 4.62$-IN. FROM TOP OF DISC

(b) AT SEA LEVEL

$F_D = (.10)(1.724)(490) = 84.5$-LB.

$F_L = (.40)(1.724)(490) = 338.0$-LB.

2.2.2 – BAYONET

REFERENCE: DORNE & MARGOLIN ENGR. REPORT NO. 7051.15, "DM C34-3 ANTENNA AERODYNAMIC ANALYSIS".

$A_{REF} = 1.237$-FT^2.

(a) AT 23,000-FT ALTITUDE

$C_D = .06683$

$F_D = (.06683)(1.237)(434) = 35.9$-LB

(b) AT SEA LEVEL

$C_D \approx \frac{1}{2}(.00983 + .01133) = .01058$

$F_D = (.01058)(1.237)(490) = 6.4$-LB.

SIZE	CODE IDENT	DWG NO.
A	13499	649-2924-001
SCALE	REV	SHEET 69

2.2.3 — TOTAL ANTENNA

REFERENCE: DORNE & MARGOLIN DRAWING 261D1195, "DM C34-3/B UHF ANTENNA".

$\bar{Y}_{SAUCER} \approx 10.48$-IN.

$\bar{Y}_{BAYONET} \approx 4.86$-IN.

AT 23,000-FT ALTITUDE

$F_D = 74.8 + 35.9 = 110.7$ -LB

$F_L = 299.3$ -LB

$M = (74.8)(10.48) + (35.9)(4.86) + (299.3)(4.27)$

$= 2,236$ IN-LB.

AT SEA LEVEL

$F_D = 84.5 + 6.4 = 90.9$ - LB.

$F_L = 338.0$ -LB

$M = (84.5)(10.48) + (6.4)(4.86) + (338.0)(4.27)$

$= 2,360$ IN-LB.

3.0 - FORCES INDUCED INTO THE AIRCRAFT

ASSUMPTION: DUE TO THE STIFFNESS OF THE ANTENNA BAYONET, THE BASE OF THE ANTENNA TENDS TO ROTATE AS A RIGID BODY ABOUT A POINT AT ITS REAR.

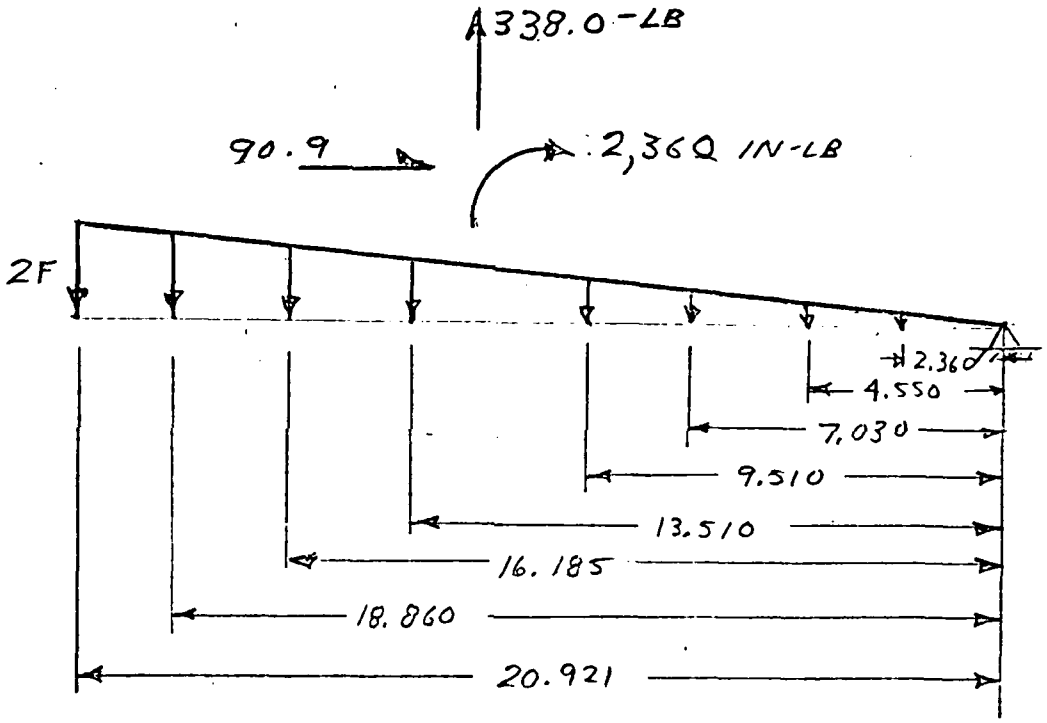

RESTORING MOMENT

$$M = \frac{2F}{(20.921)}\left[(20.921)^2 + (18.860)^2 + (16.185)^2 + (13.510)^2 + (9.510)^2 + (7.030)^2 + (4.550)^2 + (2.360)^2\right]$$

$$= 134.219\ F$$

SIZE	CODE IDENT	DWG NO.
A	13499	649-2924-001
SCALE	REV	SHEET 71

M. VET
7-2[illegible]-80

6

$134.219\,F = 2{,}360$

$F = 17.58$ -LB

SHEAR PER NODE $= \frac{90.9}{18} = 5.05$ -LB

LIFT PER NODE $= \frac{338.0}{18} = 18.78$ -LB

NODES 71 TO 88 $\quad F_Y = +5.05$ -LB

NODES 71, 72 $\quad F_Z = 17.58 + 18.78 = +36.36$ -LB

NODES 73, 74 $\quad F_Z = (17.58)\left(\frac{18.860}{20.921}\right) + 18.78 = +34.63$ -LB

NODES 75, 76 $\quad F_Z = (17.58)\left(\frac{16.185}{20.921}\right) + 18.78 = +32.38$ -LB

NODES 77, 78 $\quad F_Z = (17.58)\left(\frac{13.510}{20.921}\right) + 18.78 = +30.13$ -LB

NODES 79, 80 $\quad F_Z = (17.58)\left(\frac{9.510}{20.921}\right) + 18.78 = +26.77$ -LB

NODES 81, 82 $\quad F_Z = (17.58)\left(\frac{7.030}{20.921}\right) + 18.78 = +24.69$ -LB

NODES 83, 84 $\quad F_Z = (17.58)\left(\frac{4.550}{20.921}\right) + 18.78 = +22.60$ -LB

NODES 85, 86 $\quad F_Z = (17.58)\left(\frac{2.360}{20.921}\right) + 18.78 = +20.76$ -LB

NODES 87, 88 $\quad F_Z = -\frac{1}{2}\left[2(36.36 + 34.63 + 32.38 + 30.13 + 26.77 + 24.69 + 22.60 + 20.76) - 338.0\right]$

$= -59.32$ -LB

SIZE	CODE IDENT	DWG NO.
A	13499	649-2924-001
SCALE	REV	SHEET 72

M. VET
7-30-90

4.0- RESULTS OF THE COMPUTER ANALYSIS

4.1- SHEAR IN THE FACINGS

(ONLY SHEAR STRESS ABOVE 10,000-PSI SHOWN)

ELEMENT	STRESS (PSI)
37	10,637
54	15,467
55	17,000
80	14,251
86	22,191
96	12,582
115	10,941

4.2- FLEXURE OF THE HONEYCOMB

$$I = (2)(.012 \times 1.000)(.2335)^2$$

$$C = .2395 \text{-IN.}$$

$$S = \frac{I}{C} = .00546 \ IN^3/IN$$

BENDING STRESS

$$\sigma = \frac{M}{S} = 183.15 \ M \text{ - PSI}$$

$$M_{MAX} = 8.638 \ \text{IN-LB/IN IN ELEMENT 60}$$

$$\sigma = (183.15)(8.638) = 1,582 \text{ - PSI}$$

34	GLO	-.010	.000	.000	.000	-.000	.000
35	GLO	-.010	.000	.000	.000	.000	.000
36	GLO	-.010	.000	.000	-.000	.000	.000
37	GLO	-.010	.000	-.000	-.000	.000	.000
38	GLO	-.010	.000	-.000	.000	-.000	-.000
39	GLO	.000	.000	.000	.000	-.000	.000
40	GLO	.000	.000	.000	.000	.000	-.000
41	GLO	.000	.000	.000	-.000	-.000	-.000
42	GLO	.000	.000	.000	-.000	.000	.000
43	GLO	.000	.000	.000	-.000	.000	-.000
44	GLO	.000	.000	.000	-.000	.000	-.000
45	GLO	.010	.000	.000	-.000	-.000	-.000
46	GLO	.010	.000	.000	-.000	-.000	.000
47	GLO	.010	.000	-.000	-.000	.000	.000
48	GLO	.010	.000	-.000	.000	-.000	-.000
49	GLO	.010	.000	-.000	-.000	.000	.000
50	GLO	.010	.000	-.000	-.000	-.000	-.000
51	GLO	.000	.000	-.000	.000	-.000	-.000
52	GLO	.010	.000	.000	.000	-.000	.000
53	GLO	.000	.000	.000	-.000	.000	.000
54	GLO	.000	.000	-.000	-.000	-.000	-.000
55	GLO	-.000	.000	.000	.000	-.000	-.000
56	GLO	-.010	.000	.001	.000	-.000	.001
57	GLO	-.000	.000	.000	-.000	.000	-.000
58	GLO	-.000	.000	-.001	.000	-.000	.000
59	GLO	.000	.000	.001	.000	-.000	.000
60	GLO	.000	-.000	.001	.000	.000	-.000
61	GLO	-.000	.000	.001	.000	.000	.001
62	GLO	-.000	.000	-.000	.000	.000	.000
63	GLO	.000	-.000	.002	.000	-.000	.001
64	GLO	-.000	.000	-.000	.000	.000	.000
65	GLO	.000	-.000	.002	-.000	.000	-.000
66	GLO	.000	.000	.000	-.000	.000	-.001
67	GLO	.000	.000	.000	.000	.000	.000
68	GLO	.000	.000	.000	.000	-.000	.000
69	GLO	.000	.000	.000	-.000	.000	-.000
70	GLO	.000	.000	.000	-.000	.000	-.000
71	GLO	.000	.000	.001	-.000	-.000	.000
72	GLO	.000	-.000	.001	-.000	-.000	-.000
73	GLO	.000	.000	.001	.000	-.000	-.000
74	GLO	.000	-.000	.002	.000	-.000	-.000
75	GLO	.000	-.000	.002	-.000	-.000	.000
76	GLO	.000	-.000	.002	-.000	-.000	-.001
77	GLO	.000	.000	.001	-.000	.000	-.001
78	GLO	.000	.000	.001	-.000	-.000	.001
79	GLO	.000	.00	.001	.000	.000	-.002
80	GLO	.000	.000	.000	.000	.000	-.001
81	GLO	.000	.000	.001	-.000	-.000	.000
82	GLO	.000	.000	.001	.000	.000	-.010
83	GLO	.000	.000	.001	-.000	-.000	-.000
84	GLO	.000	.000	.001	-.000	.000	-.000
85	GLO	.000	.000	.000	-.000	-.000	.000
86	GLO	.000	.000	.000	-.000	.000	-.000
87	GLO	.000	.000	.000	-.000	.000	-.000
88	GLO	.000	.000	.000	-.000	.000	.000

139	GLO	.000	.000	.000	.000	.000	.000
140	GLO	.000	.000	.000	.000	.000	.000
141	GLO	.000	.000	.000	.000	.000	.000
142	GLO	.000	.000	.000	.000	.000	.000
143	GLO	.000	.000	.000	.000	.000	.000
144	GLO	.000	.000	.000	.000	.000	.000
145	GLO	.000	.000	.000	.000	.000	.000
146	GLO	.000	.000	.000	.000	.000	.000
147	GLO	.000	.000	.000	-.000	.000	.000
148	GLO	.000	.000	.000	.000	.000	.000
149	GLO	.000	.000	.000	-.000	.000	.000
150	GLO	.000	.000	.000	-.000	.000	.000
151	GLO	.000	.000	.000	.000	.000	.000
152	GLO	.000	.000	.000	.000	.000	.000
153	GLO	.000	.000	.000	-.000	.000	.000
154	GLO	.000	.000	.000	-.000	.000	.000

RESULTANT JOINT DISPLACEMENTS - FREE JOINTS

JOINT		/----------DISPLACEMENTS---------/			/----------ROTATIONS---------/		
		X DISPL	Y DISPL	Z DISPL	X ROT	Y ROT	Z ROT
1	GLO	-.000	.000	.000	.000	-.000	-.000
2	GLO	.000	.000	.000	-.000	-.000	-.001
3	GLO	.000	.000	.000	-.000	-.000	-.000
4	GLO	-.000	.000	.000	-.000	-.000	-.000
5	GLO	-.000	.000	-.000	-.000	-.000	.000
6	GLO	-.000	.000	-.000	.000	-.000	.000
7	GLO	-.000	.000	-.000	.000	-.000	-.000
8	GLO	-.000	.000	.000	.000	-.000	.000
9	GLO	.000	.000	.000	-.000	.000	-.000
10	GLO	.000	.000	-.000	-.000	.000	-.000
11	GLO	.000	.000	.000	.000	.000	-.000
12	GLO	.000	.000	-.000	-.000	.000	-.000
13	GLO	.000	.000	-.000	.000	.000	-.000
14	GLO	.000	.000	-.000	-.000	.000	-.000
15	GLO	.000	.000	-.000	.000	.000	-.000
16	GLO	-.000	.000	-.000	.000	.000	-.000
17	GLO	-.000	.000	.000	.000	-.000	.000
18	GLO	-.000	.000	-.000	.000	-.000	-.000
19	GLO	-.000	.000	.000	.000	-.000	-.000
20	GLO	.000	.000	-.000	.000	-.000	-.000
21	GLO	.000	.000	.000	.000	-.000	.000
22	GLO	.000	.000	.000	.000	-.000	.000
23	GLO	.000	.000	.000	.000	-.000	.000
24	GLO	.000	.000	.000	-.000	-.000	.000
25	GLO	.000	.000	-.000	.000	-.000	-.000
26	GLO	.000	.000	.000	.000	-.000	-.000
27	GLO	.000	.000	-.000	-.000	-.000	.000
28	GLO	.000	.000	-.000	.000	-.000	-.000
29	GLO	.000	.000	-.000	-.000	-.000	.000
30	GLO	.000	.000	-.000	.000	.000	-.000
31	GLO	-.000	.000	.000	.000	-.000	-.000
32	GLO	-.000	.000	.000	.000	-.000	-.000
33	GLO	-.000	.000	.000	.000	-.000	-.000

```
*****************************
*RESULTS OF LATEST ANALYSIS*
*****************************

 PROBLEM - C141-8        TITLE - DM C34-8/B UHF ANTENNA MOD

 ACTIVE UNITS  INCH   KIPS   RADIAN DEGF   SECOND

 ACTIVE STRUCTURE TYPE  SPACE FRAME

 ACTIVE COORDINATE AXES  X Y Z

LOADING - DRAG

ELEMENT STRESSES

ELEMENT

1          CENTROID    SXX      .282472+00   SYY      .635710+00   SXY     -.237286+00
                       VXX      .627331-03   VYY      .883405-03
           NODE 2          MXX      .137658-02   MYY      .160206-02   MXY      .763459-03
           NODE 38         MXX      .148795-02   MYY      .147222-02   MXY      .597519-03
           NODE 1          MXX     -.192655-02   MYY     -.161444-02   MXY      .600843-03

2          CENTROID    SXX     -.757075+00   SYY      .243176+00   SXY     -.730847+00
                       VXX     -.312685-03   VYY      .701199-03
           NODE 38         MXX     -.152571-03   MYY     -.222128-03   MXY      .615763-03
           NODE 58         MXX     -.178385-02   MYY     -.186513-02   MXY      .901835-04
           NODE 37         MXX      .109137-02   MYY      .113972-02   MXY      .415068-03

3          CENTROID    SXX     -.300581+00   SYY     -.327370+00   SXY     -.499434+00
                       VXX      .143300-02   VYY     -.186935-03
           NODE 58         MXX     -.220220-02   MYY     -.242097-02   MXY      .104305-03
           NODE 38         MXX     -.184388-02   MYY     -.229453-02   MXY      .451651-03
           NODE 2          MXX      .227399-02   MYY      .176145-02   MXY      .126423-03

4          CENTROID    SXX      .296729+00   SYY     -.563072+00   SXY      .334775+00
                       VXX     -.835524-03   VYY     -.130919-02
           NODE 58         MXX     -.152831-02   MYY     -.199410-02   MXY      .151611-03
           NODE 2          MXX      .215757-02   MYY      .705227-03   MXY      .153794-03
           NODE 3          MXX     -.937363-03   MYY     -.105833-02   MXY     -.638448-03

5          CENTROID    SXX     -.121979+01   SYY      .501616+00   SXY      .429671+00
                       VXX      .145540-03   VYY      .312196-03
           NODE 4          MXX     -.403624-03   MYY      .300938-03   MXY      .310183-03
           NODE 58         MXX     -.170732-02   MYY     -.191824-02   MXY      .162127-03
```

```
        NODE 3          MXX     -.327794-03   MYY     -.630416-03   MXY     -.683423-03

6         CENTROID    SXX     -.244401+01   SYY      .363543+00   SXY     -.777001+00
                      VXX      .105357-03   VYY     -.621055-04
        NODE 62         MXX     -.143979-03   MYY     -.312865-03   MXY      .179129-03
        NODE 58         MXX     -.128454-02   MYY     -.145195-02   MXY      .172258-03
        NODE 4          MXX      .349325-03   MYY     -.753571-03   MXY      .796576-04

7         CENTROID    SXX     -.124172+01   SYY      .156258+00   SXY      .115361+01
                      VXX     -.121252-02   VYY     -.158726-03
        NODE 62         MXX      .478987-03   MYY      .688334-04   MXY     -.137608-03
        NODE 4          MXX      .170157-02   MYY      .112876-02   MXY     -.356111-03
        NODE 5          MXX     -.138657-02   MYY     -.107245-02   MXY     -.164903-03

8         CENTROID    SXX     -.235753+01   SYY     -.299218+00   SXY     -.101879+01
                      VXX      .807812-03   VYY      .353780-03
        NODE 6          MXX     -.733548-04   MYY      .495006-03   MXY      .634516-03
        NODE 62         MXX     -.717700-04   MYY     -.404622-03   MXY      .187025-03
        NODE 5          MXX     -.139593-02   MYY     -.107421-02   MXY     -.715748-04

9         CENTROID    SXX     -.272770+01   SYY      .193408+00   SXY     -.924063+00
                      VXX     -.364481-03   VYY      .236112-04
        NODE 6          MXX     -.119347-02   MYY     -.140123-02   MXY      .294452-03
        NODE 64         MXX     -.190725-02   MYY     -.293167-02   MXY      .313612-03
        NODE 62         MXX      .761262-03   MYY      .177719-03   MXY      .432148-03

10        CENTROID    SXX     -.169229+01   SYY     -.132931+01   SXY     -.251827+01
                      VXX      .570844-03   VYY     -.182485-03
        NODE 64         MXX     -.330853-02   MYY     -.344990-02   MXY      .409078-03
        NODE 6          MXX     -.795405-03   MYY     -.789329-03   MXY      .355463-03
        NODE 7          MXX      .383704-03   MYY      .309164-03   MXY     -.163995-03

11        CENTROID    SXX     -.706310+00   SYY     -.267371+01   SXY     -.247128+01
                      VXX      .194802-03   VYY     -.290770-03
        NODE 8          MXX     -.415731-03   MYY     -.563273-03   MXY      .463300-03
        NODE 64         MXX     -.320286-02   MYY     -.332824-02   MXY      .466973-03
        NODE 7          MXX      .635446-03   MYY      .201356-03   MXY     -.280041-03

12        CENTROID    SXX     -.522030+00   SYY     -.189401+01   SXY     -.197591+01
                      VXX      .281452-03   VYY     -.139282-03
        NODE 66         MXX     -.126301-02   MYY     -.940621-03   MXY      .699108-04
        NODE 64         MXX     -.202244-02   MYY     -.158696-02   MXY      .616369-03
        NODE 8          MXX      .814734-03   MYY     -.308422-03   MXY      .362129-03

13        CENTROID    SXX      .269201+01   SYY     -.384173+01   SXY     -.128430+01
                      VXX     -.807661-04   VYY      .171218-03
        NODE 66         MXX      .684558-03   MYY      .897208-03   MXY      .121888-03
        NODE 8          MXX     -.760717-03   MYY     -.836187-03   MXY      .516352-03
        NODE 9          MXX     -.375142-03   MYY     -.487352-04   MXY      .447774-03
```

```
14      CENTROID   SXX     .110815+02   SYY    -.222993+01   SXY     .363354+01
                   VXX    -.525623-04   VYY     .185587-03
        NODE 66        MXX    -.404871-03   MYY    -.106893-03   MXY     .233827-03
        NODE 9         MXX    -.258055-03   MYY    -.254046-03   MXY     .117046-04
        NODE 46        MXX     .263547-04   MYY     .459735-03   MXY     .387269-04

15      CENTROID   SXX    -.762859+00   SYY    -.113345+00   SXY     .104997+02
                   VXX     .554943-03   VYY    -.512130-03
        NODE 66        MXX    -.386911-03   MYY     .652525-03   MXY    -.659077-03
        NODE 46        MXX     .146253-02   MYY     .202421-02   MXY     .234049-04
        NODE 45        MXX    -.132428-02   MYY    -.443858-03   MXY    -.298358-03

16      CENTROID   SXX    -.671667+00   SYY    -.194667+01   SXY     .514827+01
                   VXX    -.631284-03   VYY    -.173588-03
        NODE 46        MXX     .125780-02   MYY     .140018-02   MXY    -.815130-04
        NODE 9         MXX     .105281-02   MYY     .885455-03   MXY     .140354-03
        NODE 10        MXX    -.297532-03   MYY    -.394169-03   MXY     .166558-04

17      CENTROID   SXX     .666856+01   SYY     .103441+02   SXY     .801184+01
                   VXX    -.675155-03   VYY     .336708-03
        NODE 11        MXX     .950575-03   MYY     .631014-03   MXY    -.245963-03
        NODE 46        MXX     .130529-02   MYY     .974775-03   MXY    -.225673-03
        NODE 10        MXX    -.377483-03   MYY    -.570890-03   MXY    -.193806-03

18      CENTROID   SXX    -.240497+01   SYY    -.802927-01   SXY     .429200+01
                   VXX     .306246-03   VYY     .472720-03
        NODE 45        MXX    -.912068-03   MYY    -.141653-02   MXY    -.778634-04
        NODE 11        MXX     .368230-03   MYY    -.135497-03   MXY    -.781398-04
        NODE 68        MXX    -.521485-05   MYY     .728390-04   MXY     .658007-04

19      CENTROID   SXX    -.842531+01   SYY     .260420+01   SXY    -.206150+01
                   VXX     .738653-03   VYY     .230258-03
        NODE 46        MXX     .944277-03   MYY     .778754-03   MXY    -.168996-03
        NODE 68        MXX     .686503-03   MYY     .341280-03   MXY    -.518497-04
        NODE 45        MXX    -.109546-02   MYY    -.132719-02   MXY    -.103578-03

20      CENTROID   SXX    -.226795+01   SYY     .795087+01   SXY     .882588+00
                   VXX    -.678859-04   VYY    -.331746-03
        NODE 12        MXX    -.346296-03   MYY    -.295792-03   MXY     .133307-04
        NODE 68        MXX    -.709340-04   MYY    -.912057-04   MXY     .424429-04
        NODE 11        MXX     .626894-03   MYY     .710976-03   MXY     .432939-04

21      CENTROID   SXX    -.998458+00   SYY    -.264125+01   SXY    -.237136+01
                   VXX     .968067-05   VYY    -.361325-05
        NODE 70        MXX     .167584-03   MYY     .793685-04   MXY     .800644-06
        NODE 68        MXX     .271922-03   MYY     .302029-03   MXY     .220248-04
        NODE 12        MXX     .276756-03   MYY     .258502-03   MXY    -.340649-05
```

```
22          CENTROID   SXX    -.285994+00   SYY     .570884+01   SXY    -.935864+00
                       VXX     .367425-04   VYY     .149070-03
            NODE 70          MXX    -.103895-03   MYY    -.221194-03   MXY    -.523517-04
            NODE 12          MXX    -.149877-03   MYY    -.249642-03   MXY    -.179377-04
            NODE 13          MXX     .347131-03   MYY     .222259-03   MXY    -.369006-04

23          CENTROID   SXX    -.111914+01   SYY     .363483+01   SXY    -.152115+01
                       VXX     .442615-04   VYY    -.318151-04
            NODE 14          MXX     .142021+03   MYY     .845000-04   MXY    -.526079-04
            NODE 70          MXX    -.783744-04   MYY    -.145044-03   MXY    -.468690-04
            NODE 13          MXX     .852345-03   MYY     .171924-03   MXY    -.624997-04

24          CENTROID   SXX    -.255037+00   SYY    -.336023+00   SXY    -.234219+01
                       VXX     .430701-04   VYY    -.447658-04
            NODE 54          MXX     .223333-04   MYY    -.878428-04   MXY    -.926560-04
            NODE 70          MXX     .128009-04   MYY    -.458135-04   MXY    -.542880-04
            NODE 14          MXX     .303418-03   MYY    -.197895-03   MXY    -.555552-04

25          CENTROID   SXX     .833621+00   SYY     .168265+01   SXY    -.123206+01
                       VXX     .100511-02   VYY    -.202389-03
            NODE 54          MXX    -.823377-03   MYY    -.928246-03   MXY    -.134668-03
            NODE 14          MXX     .300878-03   MYY     .920309-04   MXY     .315268-04
            NODE 15          MXX     .122552-02   MYY     .354361-03   MXY    -.515701-04

26          CENTROID   SXX     .233051+01   SYY    -.173397+01   SXY    -.120853+01
                       VXX    -.244336-04   VYY    -.988689-05
            NODE 70          MXX    -.485119-04   MYY    -.187962-04   MXY     .734359-05
            NODE 54          MXX    -.952453-04   MYY    -.598582-04   MXY     .104218-04
            NODE 53          MXX    -.380466-04   MYY    -.317944-04   MXY     .888269-05

27          CENTROID   SXX    -.217327+01   SYY     .776765+00   SXY     .288857-01
                       VXX     .355762-03   VYY    -.268905-03
            NODE 58          MXX    -.156164-02   MYY    -.150782-02   MXY    -.392126-04
            NODE 36          MXX    -.258220-03   MYY    -.452287-03   MXY    -.164403-04
            NODE 37          MXX     .878791-03   MYY     .533604-03   MXY     .191779-03

28          CENTROID   SXX    -.260616+01   SYY     .130400+01   SXY     .137859+01
                       VXX    -.311133-03   VYY     .483703-03
            NODE 37          MXX     .140181-02   MYY     .109445-02   MXY     .124496-03
            NODE 36          MXX     .999954-03   MYY     .599610-03   MXY     .256491-04
            NODE 58          MXX    -.183794-02   MYY    -.232449-02   MXY     .136864-03

29          CENTROID   SXX    -.230402+01   SYY     .851993+00   SXY     .141279+01
                       VXX     .213432-03   VYY    -.430432-03
            NODE 36          MXX     .913761-03   MYY     .288229-04   MXY    -.122993-03
            NODE 37          MXX     .571793-03   MYY    -.109022-03   MXY    -.365777-04
            NODE 35          MXX     .576031-03   MYY    -.775983-03   MXY     .434077-04
```

```
30      CENTROID   SXX     .536432-01   SYY     .383163+00   SXY     .888544+00
                   VXX    -.489220-03   VYY     .328392-03
        NODE 58        MXX    -.211579-02   MYY    -.235683-02   MXY     .106871-03
        NODE 61        MXX    -.112490-02   MYY    -.126572-02   MXY     .126253-03
        NODE 57        MXX     .908311-03   MYY     .843583-03   MXY    -.102130-03

31      CENTROID   SXX    -.198644+01   SYY    -.128400+00   SXY    -.124390+01
                   VXX     .242657-03   VYY     .111212-03
        NODE 61        MXX    -.784323-03   MYY    -.964147-03   MXY     .159686-03
        NODE 58        MXX    -.130350-02   MYY    -.134724-02   MXY     .148601-03
        NODE 62        MXX     .216994-03   MYY     .181001-03   MXY     .292391-03

32      CENTROID   SXX    -.358474+01   SYY     .174516+00   SXY    -.182158+01
                   VXX    -.125264-03   VYY    -.395088-03
        NODE 64        MXX    -.155589-02   MYY    -.222575-02   MXY     .148026-03
        NODE 61        MXX    -.982759-03   MYY    -.121113-02   MXY     .575115-04
        NODE 62        MXX     .643389-03   MYY     .372705-03   MXY     .420400-03

33      CENTROID   SXX    -.102592+01   SYY     .103487+02   SXY    -.145496+01
                   VXX    -.111204-02   VYY     .121331-02
        NODE 61        MXX    -.214355-02   MYY    -.191923-02   MXY    -.547162-04
        NODE 64        MXX    -.448447-02   MYY    -.466109-02   MXY     .636064-04
        NODE 63        MXX     .401021-02   MYY     .340451-02   MXY    -.697306-03

34      CENTROID   SXX     .130654+02   SYY     .196405+01   SXY     .494296+01
                   VXX    -.105918-02   VYY     .123103-02
        NODE 64        MXX    -.405141-02   MYY    -.401376-02   MXY     .312114-03
        NODE 65        MXX     .261196-02   MYY     .296319-02   MXY     .260652-03
        NODE 63        MXX     .346056-02   MYY     .233333-02   MXY    -.118014-02

35      CENTROID   SXX     .103842+02   SYY    -.205789+01   SXY     .212045+01
                   VXX    -.886574-03   VYY     .691468-03
        NODE 65        MXX     .369847-02   MYY     .491494-02   MXY    -.393029-03
        NODE 64        MXX    -.193924-02   MYY    -.122070-02   MXY    -.142736-05
        NODE 66        MXX    -.164893-02   MYY     .135255-02   MXY     .337234-03

36      CENTROID   SXX     .662081+01   SYY    -.126710+02   SXY    -.286414+00
                   VXX    -.137188-02   VYY    -.119947-02
        NODE 65        MXX     .473745-02   MYY     .502820-02   MXY    -.644366-03
        NODE 66        MXX     .726763-03   MYY     .121174-02   MXY    -.582029-03
        NODE 44        MXX    -.352827-02   MYY    -.203114-02   MXY    -.149435-02

37      CENTROID   SXX    -.168170+02   SYY    -.223091+01   SXY     .106366+02
                   VXX    -.186300-03   VYY    -.442021-02
        NODE 65        MXX     .843218-02   MYY     .842688-02   MXY    -.392356-03
        NODE 44        MXX     .589080-03   MYY     .614134-03   MXY    -.430503-03
        NODE 43        MXX    -.350070-02   MYY    -.694946-02   MXY    -.134142-02

38      CENTROID   SXX    -.100759+02   SYY    -.129119+01   SXY     .812703+01
```

		VXX	-.411781-03	VYY	-.312216-03			
	NODE 44	MXX	-.2[illegible]7664-03	MYY	.139700-03	MXY	-.620271-03	
	NODE 66	MXX	.5[illegible]3177-03	MYY	.933950-03	MXY	-.771390-03	
	NODE 45	MXX	-.1[illegible]6589-02	MYY	-.845347-03	MXY	-.733266-03	
39	CENTROID	SXX	-.159306+02	SYY	-.276218+00	SXY	-.835914+00	
		VXX	-.115452-03	VYY	.481735-03			
	NODE 68	MXX	.132902-02	MYY	.592731-03	MXY	-.163515-03	
	NODE 44	MXX	-.908578-03	MYY	-.111443-02	MXY	-.801876-03	
	NODE 45	MXX	-.902690-03	MYY	-.163698-02	MXY	-.558887-03	
40	CENTROID	SXX	-.898569+01	SYY	-.597004+01	SXY	-.436250+01	
		VXX	.622822-03	VYY	.779283-03			
	NODE 68	MXX	.139752-02	MYY	.594892-03	MXY	-.222209-03	
	NODE 67	MXX	.965172-03	MYY	.134736-03	MXY	-.316512-03	
	NODE 44	MXX	-.275313-02	MYY	-.522747-02	MXY	-.373880-03	
41	CENTROID	SXX	-.222587+02	SYY	.537627+00	SXY	-.155999+00	
		VXX	.875673-03	VYY	.270185-02			
	NODE 44	MXX	-.355857-03	MYY	-.942883-03	MXY	-.493393-03	
	NODE 67	MXX	.440116-02	MYY	.335838-02	MXY	-.803698-05	
	NODE 43	MXX	-.297425-02	MYY	-.645653-02	MXY	-.656513-03	
42	CENTROID	SXX	.318055+00	SYY	.102189+01	SXY	.129434+01	
		VXX	-.219258-03	VYY	-.140102-03			
	NODE 68	MXX	-.104922-03	MYY	-.390347-03	MXY	.129012-03	
	NODE 69	MXX	-.687642-03	MYY	-.554903-03	MXY	.107749-03	
	NODE 67	MXX	.770667-03	MYY	.788494-03	MXY	.309926-03	
43	CENTROID	SXX	-.191667+01	SYY	-.872272+00	SXY	-.228647+01	
		VXX	-.244153-04	VYY	-.356534-04			
	NODE 69	MXX	.365127-04	MYY	.295305-03	MXY	.748503-04	
	NODE 68	MXX	.111879-03	MYY	.188148-03	MXY	.107338-03	
	NODE 70	MXX	-.775789-04	MYY	.505863-04	MXY	.519175-04	
44	CENTROID	SXX	.174958+01	SYY	-.998089+00	SXY	-.738275+00	
		VXX	.468142-04	VYY	-.484091-04			
	NODE 70	MXX	.343720-04	MYY	.217265-03	MXY	.444830-04	
	NODE 52	MXX	.693298-04	MYY	.965430-04	MXY	-.539110-05	
	NODE 69	MXX	-.379229-03	MYY	-.252326-03	MXY	-.352759-04	
45	CENTROID	SXX	.275042+01	SYY	-.159540+01	SXY	.250778+00	
		VXX	-.158096-03	VYY	.600627-04			
	NODE 52	MXX	.177638-03	MYY	.417652-04	MXY	.562116-04	
	NODE 70	MXX	.642505-04	MYY	.184153-04	MXY	.734359-05	
	NODE 53	MXX	-.161286-03	MYY	-.151255-03	MXY	.317776-04	
46	CENTROID	SXX	.167634+01	SYY	.768427-01	SXY	.748033+00	
		VXX	-.130888-03	VYY	-.370519-04			

	NODE 49	MXX	-.344807-03	MYY	-.533520-03	MXY	-.114713-03	
	NODE 32	MXX	.568099-04	MYY	.750429-04	MXY	-.935018-06	
	NODE 51	MXX	.258537-03	MYY	.273947-03	MXY	-.578243-04	
47	CENTROID	SXX	-.270344+01	SYY	-.407256+00	SXY	.184328+01	
		VXX	-.323903-03	VYY	.149273-03			
	NODE 57	MXX	.509552-03	MYY	-.169658-03	MXY	-.559687-05	
	NODE 34	MXX	.760193-03	MYY	.130225-03	MXY	-.281605-04	
	NODE 35	MXX	.711654-04	MYY	-.582704-03	MXY	.721332-04	
48	CENTROID	SXX	-.658969-00	SYY	.186121+01	SXY	-.435486-01	
		VXX	.274140-04	VYY	-.213973-04			
	NODE 56	MXX	.766032-03	MYY	.390142-03	MXY	-.319774-04	
	NODE [illegible]	MXX	.404587-03	MYY	-.7[illegible]7457-04	MXY	-.550194-04	
	NODE [illegible]	MXX	.9[illegible]1934-03	MYY	.467905-03	MXY	.757058-04	
49	CENTROID	SXX	-.333889-01	SYY	.274693+00	SXY	.236743+01	
		VXX	.347554-03	VYY	-.379410-03			
	NODE 34	MXX	.6[illegible]7442-03	MYY	.478679-03	MXY	.278071-04	
	NODE 56	MXX	.[illegible]54-03	MYY	.454411-03	MXY	.419421-04	
	NODE 33	MXX	-.[illegible]70-03	MYY	-.488586-03	MXY	.891387-04	
50	CENTROID	SXX	.609703-00	SYY	.121212+01	SXY	.374237+00	
		VXX	-.106345-03	VYY	-.244318-03			
	NODE 61	MXX	-.950030-03	MYY	-.122311-02	MXY	-.175647-03	
	NODE 56	MXX	.409546-03	MYY	-.771098-04	MXY	-.104600-03	
	NODE 57	MXX	.741238-03	MYY	.595772-03	MXY	.867666-04	
51	CENTROID	SXX	.681730-00	SYY	.224179+01	SXY	.239592+00	
		VXX	-.437481-03	VYY	.385115-03			
	NODE 56	MXX	.2[illegible]0851-03	MYY	-.339227-04	MXY	-.182565-03	
	NODE 61	MXX	-.163747-02	MYY	-.149211-02	MXY	-.348017-03	
	NODE 60	MXX	.107376-02	MYY	.149903-02	MXY	-.508293-03	
52	CENTROID	SXX	.639294-01	SYY	-.221644+01	SXY	.480641+01	
		VXX	-.548316-03	VYY	-.940390-04			
	NODE 61	MXX	-.120301-02	MYY	-.997668-03	MXY	-.233067-03	
	NODE 72	MXX	-.427456-03	MYY	-.312836-03	MXY	-.207013-03	
	NODE 60	MXX	.169943-02	MYY	.157105-02	MXY	-.377432-03	
53	CENTROID	SXX	.179058+02	SYY	.127265+00	SXY	.517822+01	
		VXX	.727018-03	VYY	.117049-03			
	NODE 72	MXX	-.200434-02	MYY	-.155476-02	MXY	-.348733-03	
	NODE 61	MXX	-.150399-02	MYY	-.142904-02	MXY	-.159595-03	
	NODE 63	MXX	.245946-02	MYY	.234033-02	MXY	-.428044-03	
54	CENTROID	SXX	-.111242+02	SYY	-.126346+02	SXY	-.154671+02	
		VXX	-.605566-03	VYY	-.102551-02			
	NODE 72	MXX	.579084-03	MYY	.142071-02	MXY	-.210185-03	

```
        NODE 63          MXX     .201817-02   MYY     .284541-02   MXY     .460026-04
        NODE 74          MXX    -.168823-02   MYY    -.149125-02   MXY     .442900-04

55        CENTROID   SXX    -.183479+02   SYY    -.316216+01   SXY    -.170003+02
                     VXX     .195532-02   VYY     .143931-02
        NODE 63          MXX     .528671-02   MYY     .561414-02   MXY    -.260501-03
        NODE 76          MXX     .320353-02   MYY     .349151-02   MXY    -.202125-03
        NODE 74          MXX    -.307182-02   MYY    -.215508-02   MXY     .870176-05

56        CENTROID   SXX     .639408+01   SYY     .121929+02   SXY    -.814894+01
                     VXX     .838935-03   VYY     .313877-03
        NODE 63          MXX     .370039-02   MYY     .385287-02   MXY    -.333852-04
        NODE 65          MXX     .408722-02   MYY     .545294-02   MXY     .902618-04
        NODE 76          MXX    -.430956-03   MYY     .234167-03   MXY     .105338-03

57        CENTROID   SXX     .224326+01   SYY    -.111444+01   SXY    -.795929+01
                     VXX     .120008-03   VYY    -.310298-03
        NODE 76          MXX     .196533-02   MYY     .238226-02   MXY     .468087-03
        NODE 65          MXX     .401202-02   MYY     .485374-02   MXY     .325913-03
        NODE 78          MXX    -.365012-03   MYY     .182405-02   MXY     .801850-03

58        CENTROID   SXX    -.256835+02   SYY     .114464+02   SXY     .752246+01
                     VXX     .112771-02   VYY    -.263614-02
        NODE 78          MXX     .536138-02   MYY     .380293-02   MXY    -.560899-04
        NODE 42          MXX     .150167-02   MYY    -.562604-03   MXY     .169347-03
        NODE 41          MXX    -.236802-03   MYY    -.618613-02   MXY     .443758-03

59        CENTROID   SXX     .106530+02   SYY     .103035+02   SXY    -.165958+01
                     VXX    -.199769-02   VYY    -.150361-02
        NODE 78          MXX     .447605-02   MYY     .283862-02   MXY    -.106724-02
        NODE 65          MXX     .578713-02   MYY     .535001-02   MXY    -.309680-03
        NODE 42          MXX    -.317079-02   MYY    -.515683-02   MXY     .438561-03

60        CENTROID   SXX    -.198129+02   SYY     .483091+01   SXY    -.631801+01
                     VXX    -.110833-02   VYY    -.416218-02
        NODE 42          MXX    -.258352-03   MYY    -.109238-02   MXY     .879313-04
        NODE 65          MXX     .853784-02   MYY     .818659-02   MXY    -.413309-03
        NODE 43          MXX    -.288470-02   MYY    -.743025-02   MXY    -.662086-03

61        CENTROID   SXX    -.170692+02   SYY    -.225183-01   SXY     .907709+01
                     VXX     .436012-04   VYY     .277003-02
        NODE 67          MXX     .461193-02   MYY     .339117-02   MXY     .521299-04
        NODE 42          MXX    -.134349-02   MYY    -.256359-02   MXY     .976716-04
        NODE 43          MXX    -.265506-02   MYY    -.690346-02   MXY    -.151210-03

62        CENTROID   SXX     .476020+01   SYY     .106658+02   SXY    -.685972+00
                     VXX    -.240295-02   VYY     .134879-02
        NODE 67          MXX     .139252-02   MYY     .464501-03   MXY     .412415-03
        NODE 80          MXX     .415374-02   MYY     .218710-02   MXY     .977507-03
```

```
        NODE 42          MXX     -.362638-02   MYY     -.493652-02   MXY      .921126-03

63        CENTROID   SXX     -.340877+02   SYY     -.105725+01   SXY     -.544736+01
                     VXX      .162000-02   VYY      .202797-02
        NODE 42          MXX      .144536-02   MYY     -.124080-02   MXY      .153577-03
        NODE 80          MXX      .482488-02   MYY      .179685-02   MXY      .440833-03
        NODE 41          MXX     -.114571-02   MYY     -.633997-02   MXY     -.769593-03

64        CENTROID   SXX     -.490895+01   SYY     -.315699+01   SXY      .430004+01
                     VXX     -.149494-03   VYY      .195092-03
        NODE 67          MXX      .420432-03   MYY      .543739-03   MXY     -.254849-03
        NODE 82          MXX     -.847694-04   MYY      .424161-03   MXY     -.233084-03
        NODE 80          MXX     -.344400-03   MYY     -.599362-04   MXY     -.225969-03

65        CENTROID   SXX     -.575144+01   SYY     -.191380+01   SXY     -.343675+01
                     VXX      .302937-03   VYY      .598820-04
        NODE 69          MXX     -.670401-03   MYY     -.298287-03   MXY     -.191247-03
        NODE 82          MXX     -.558276-03   MYY     -.266380-03   MXY     -.243185-03
        NODE 67          MXX      .728462-03   MYY      .121859-02   MXY     -.232325-03

66        CENTROID   SXX     -.419588+01   SYY     -.695258+01   SXY     -.266713+00
                     VXX     -.705358-03   VYY      .149928-02
        NODE 82          MXX     -.160131-02   MYY     -.112677-02   MXY     -.125777-03
        NODE 69          MXX     -.630447-03   MYY     -.259287-03   MXY     -.289200-03
        NODE 84          MXX      .173838-02   MYY      .248604-02   MXY     -.348708-03

67        CENTROID   SXX      .468372+01   SYY     -.535023+01   SXY     -.545202+01
                     VXX     -.257643-03   VYY     -.168371-02
        NODE 84          MXX      .222533-02   MYY      .252321-02   MXY     -.235803-03
        NODE 69          MXX     -.296040-03   MYY     -.705984-04   MXY     -.174272-03
        NODE 86          MXX      .790034-04   MYY     -.135053-02   MXY     -.653592-04

68        CENTROID   SXX      .807033+01   SYY      .340696+01   SXY      .290492+01
                     VXX      .141309-03   VYY      .124346-03
        NODE 69          MXX      .149735-03   MYY      .557037-04   MXY     -.181379-03
        NODE 50          MXX      .452539-03   MYY      .250620-03   MXY     -.725289-04
        NODE 86          MXX     -.536173-03   MYY     -.959524-03   MXY     -.152728-03

69        CENTROID   SXX      .100074+01   SYY     -.146104+00   SXY      .779604+00
                     VXX      .397418-03   VYY     -.137955-03
        NODE 50          MXX     -.734606-03   MYY     -.983238-03   MXY     -.456226-04
        NODE 69          MXX     -.442938-03   MYY     -.565904-03   MXY     -.114714-03
        NODE 51          MXX      .175602-03   MYY      .460908-05   MXY     -.801681-04

70        CENTROID   SXX     -.448185+01   SYY     -.333615+01   SXY      .431859+01
                     VXX     -.237685-04   VYY      .125398-03
        NODE 86          MXX     -.755553-03   MYY     -.470926-03   MXY     -.182793-03
        NODE 50          MXX     -.348628-03   MYY     -.200563-03   MXY     -.565072-04
        NODE 88          MXX     -.263895-03   MYY     -.268418-04   MXY     -.117350-03
```

71	CENTROID	SXX	.376881+01	SYY	-.185724+01	SXY	-.327507+01	
		VXX	-.625062-03	VYY	.303903-03			
	NODE 88	MXX	-.616851-03	MYY	-.725205-03	MXY	.288119-04	
	NODE 50	MXX	-.118612-02	MYY	-.130119-02	MXY	.959503-05	
	NODE 49	MXX	.659555-03	MYY	.303590-03	MXY	.476954-05	
72	CENTROID	SXX	-.197820+01	SYY	-.719142+00	SXY	.297841+01	
		VXX	-.560598-03	VYY	.100385-03			
	NODE 56	MXX	.593552-03	MYY	.479473-03	MXY	.273285-04	
	NODE 32	MXX	.354931-03	MYY	.414310-03	MXY	-.189854-03	
	NODE 33	MXX	-.626727-03	MYY	-.560561-03	MXY	-.111585-04	
73	CENTROID	SXX	.157476+01	SYY	-.617972+00	SXY	.189509+01	
		VXX	.139629-03	VYY	-.541126-04			
	NODE 55	MXX	.325942-05	MYY	-.122258-04	MXY	-.183965-03	
	NODE 32	MXX	.132227-03	MYY	-.643904-05	MXY	-.172503-03	
	NODE 56	MXX	.821334-03	MYY	.691873-03	MXY	-.226920-03	
74	CENTROID	SXX	-.174875+01	SYY	-.100424+01	SXY	.176137+01	
		VXX	.217731-03	VYY	-.115886-03			
	NODE 32	MXX	.226464-03	MYY	.254521-03	MXY	-.218552-03	
	NODE 55	MXX	.986741-04	MYY	.238916-03	MXY	-.252025-03	
	NODE 31	MXX	-.295107-03	MYY	-.114544-03	MXY	-.220092-03	
75	CENTROID	SXX	.565759+00	SYY	.169153+01	SXY	.736221-01	
		VXX	.168077-03	VYY	.176757-05			
	NODE 56	MXX	.926972-03	MYY	.818402-03	MXY	-.209269-03	
	NODE 59	MXX	.712512-03	MYY	.659960-03	MXY	-.244215-03	
	NODE 55	MXX	.386096-04	MYY	.744076-04	MXY	-.189618-03	
76	CENTROID	SXX	.631782+01	SYY	.330994+01	SXY	.983640+00	
		VXX	.250424-03	VYY	.344105-04			
	NODE 59	MXX	.209988-03	MYY	-.977272-04	MXY	-.796188-04	
	NODE 56	MXX	.554951-03	MYY	.225376-03	MXY	-.583259-04	
	NODE 60	MXX	.157612-02	MYY	.107855-02	MXY	-.103115-03	
77	CENTROID	SXX	.282264+01	SYY	-.317954+01	SXY	-.192860+01	
		VXX	.930332-04	VYY	-.393265-04			
	NODE 60	MXX	.148539-02	MYY	.993377-03	MXY	-.197045-03	
	NODE 71	MXX	.727627-03	MYY	.430715-03	MXY	-.257331-03	
	NODE 59	MXX	.454180-03	MYY	.404414-03	MXY	.778440-04	
78	CENTROID	SXX	-.165119+01	SYY	.371078+01	SXY	.348874+00	
		VXX	-.102320-02	VYY	-.561010-03			
	NODE 71	MXX	.173908-02	MYY	.168724-02	MXY	.392842-03	
	NODE 60	MXX	.135498-02	MYY	.863703-03	MXY	.174538-03	
	NODE 72	MXX	-.675010-03	MYY	-.778579-03	MXY	.491199-05	

79	CENTROID	SXX	-.410316+00	SYY	-.838499+01	SXY	.116741+01		
		VXX	.993768-03	VYY	-.260789-02				
	NODE 72	MXX	-.193139-02	MYY	-.201008-02	MXY	.555298-03		
	NODE 73	MXX	-.274947-02	MYY	-.298058-02	MXY	.581364-03		
	NODE 71	MXX	.216792-02	MYY	.193313-02	MXY	.425583-03		
80	CENTROID	SXX	-.563577+01	SYY	.399715+01	SXY	.142505+02		
		VXX	.244514-03	VYY	.649991-04				
	NODE 74	MXX	-.880153-03	MYY	-.109170-02	MXY	-.210184-03		
	NODE 73	MXX	-.550084-03	MYY	-.464068-03	MXY	-.527461-03		
	NODE 72	MXX	.379098-06	MYY	.363669-04	MXY	-.373217-03		
81	CENTROID	SXX	-.136323+02	SYY	-.157333+01	SXY	-.627272+01		
		VXX	-.194694-02	VYY	.409093-02				
	NODE 74	MXX	-.373121-03	MYY	.176112-03	MXY	.118341-03		
	NODE 75	MXX	.788292-02	MYY	.829742-02	MXY	.608927-04		
	NODE 73	MXX	.643899-04	MYY	-.339081-02	MXY	.600474-03		
82	CENTROID	SXX	.578256+01	SYY	-.668025+01	SXY	.769346+01		
		VXX	-.758196-03	VYY	.156828-02				
	NODE 75	MXX	.403111-02	MYY	.420412-02	MXY	-.239619-04		
	NODE 74	MXX	-.172291-02	MYY	-.177383-02	MXY	-.249597-03		
	NODE 76	MXX	-.112274-02	MYY	.209953-02	MXY	.113053-03		
83	CENTROID	SXX	.436643+01	SYY	-.237369+01	SXY	-.701265+01		
		VXX	-.306172-03	VYY	.342235-03				
	NODE 78	MXX	.209989-02	MYY	.247459-02	MXY	.410412-03		
	NODE 75	MXX	.434552-02	MYY	.541524-02	MXY	.290831-04		
	NODE 76	MXX	-.118260-02	MYY	.135299-02	MXY	.330845-03		
84	CENTROID	SXX	.370376+01	SYY	.514148+01	SXY	-.532331+01		
		VXX	-.126447-02	VYY	-.381426-02				
	NODE 75	MXX	.755283-02	MYY	.810122-02	MXY	.323077-03		
	NODE 78	MXX	.568375-03	MYY	.153739-02	MXY	.535227-04		
	NODE 77	MXX	-.717304-04	MYY	-.238311-02	MXY	.120374-03		
85	CENTROID	SXX	.270530+01	SYY	.625067+00	SXY	.215193+01		
		VXX	.735839-04	VYY	-.412768-03				
	NODE 78	MXX	-.271832-03	MYY	-.377689-03	MXY	.286262-04		
	NODE 48	MXX	.878614-03	MYY	.664171-03	MXY	.494433-04		
	NODE 77	MXX	-.486714-03	MYY	-.140704-02	MXY	-.173298-04		
86	CENTROID	SXX	-.115526+02	SYY	-.158895+02	SXY	-.221913+02		
		VXX	.422695-03	VYY	-.520620-02				
	NODE 40	MXX	-.172705-02	MYY	-.257616-02	MXY	.938257-03		
	NODE 78	MXX	.633582-02	MYY	.434055-02	MXY	.119848-03		
	NODE 41	MXX	-.368496-02	MYY	-.661960-02	MXY	.912538-03		

87	CENTROID	SXX	-.246351+02	SYY	.469902+00	SXY	-.137589+01	
		VXX	.347156-03	VYY	-.615158-03			
	NODE 77	MXX	.162231-02	MYY	-.172487-02	MXY	.665101-03	
	NODE 40	MXX	.163414-03	MYY	-.339721-02	MXY	-.844275-04	
	NODE 39	MXX	-.738583-03	MYY	-.423517-02	MXY	.299014-03	
88	CENTROID	SXX	-.218061+02	SYY	.904256+01	SXY	-.586681+01	
		VXX	.109113-02	VYY	.372036-02			
	NODE 40	MXX	.964557-03	MYY	-.983611-03	MXY	-.844275-04	
	NODE 79	MXX	.693001-02	MYY	.507676-02	MXY	-.409682-03	
	NODE 39	MXX	-.907519-03	MYY	-.645103-02	MXY	-.983319-03	
89	CENTROID	SXX	.882781+00	SYY	.363144+01	SXY	-.851889+01	
		VXX	-.127091-02	VYY	.277231-02			
	NODE 80	MXX	.210833-02	MYY	.137156-02	MXY	.233027-03	
	NODE 79	MXX	.556911-02	MYY	.352830-02	MXY	.233027-03	
	NODE 40	MXX	-.305458-02	MYY	-.465555-02	MXY	.527132-03	
90	CENTROID	SXX	-.112967+02	SYY	-.191138+02	SXY	.859033+01	
		VXX	.319017-03	VYY	.458583-02			
	NODE 80	MXX	.391141-02	MYY	.195390-02	MXY	.129353-02	
	NODE 40	MXX	-.205863-02	MYY	-.360719-02	MXY	.938257-03	
	NODE 41	MXX	-.442001-02	MYY	-.757233-02	MXY	.783577-03	
91	CENTROID	SXX	.311994+01	SYY	.104107+02	SXY	-.574965+01	
		VXX	.531496-03	VYY	-.189029-02			
	NODE 80	MXX	-.205193-03	MYY	.728244-03	MXY	.233025-03	
	NODE 81	MXX	-.254949-04	MYY	.265633-03	MXY	-.165169-03	
	NODE 79	MXX	.331319-02	MYY	.450830-02	MXY	.339276-04	
92	CENTROID	SXX	-.595324-02	SYY	-.532839+01	SXY	-.676780+01	
		VXX	.342412-03	VYY	-.141733-02			
	NODE 81	MXX	.245915-02	MYY	.262315-02	MXY	-.243981-03	
	NODE 80	MXX	.181703-02	MYY	.233330-02	MXY	-.255957-04	
	NODE 82	MXX	-.113861-02	MYY	-.894293-03	MXY	-.134788-03	
93	CENTROID	SXX	-.268212-01	SYY	-.539163+01	SXY	.883239+01	
		VXX	.321487-03	VYY	.135545-02			
	NODE 84	MXX	.311382-02	MYY	.296756-02	MXY	-.505128-04	
	NODE 81	MXX	.246004-02	MYY	.262585-02	MXY	-.243980-03	
	NODE 82	MXX	-.474971-03	MYY	-.467386-03	MXY	-.147246-03	
94	CENTROID	SXX	.204435+01	SYY	.117632+02	SXY	.369365+01	
		VXX	-.304461-03	VYY	-.859759-03			
	NODE 81	MXX	.220569-02	MYY	.198639-02	MXY	-.522745-05	
	NODE 84	MXX	.505895-03	MYY	.433374-03	MXY	-.962243-04	
	NODE 83	MXX	.641555-03	MYY	-.206771-03	MXY	-.507269-04	
95	CENTROID	SXX	.444802+00	SYY	.691613+01	SXY	.636878+01	

```
                    VXX     -.178285-03   VYY      .436791-03
          NODE 84          MXX      .410512-03   MYY      .118537-03   MXY     -.962247-04
          NODE 85          MXX     -.210474-03   MYY      .192517-03   MXY      .260763-03
          NODE 83          MXX     -.125235-03   MYY     -.430129-03   MXY      .822695-04

96          CENTROID   SXX      .637956+01   SYY     -.224804+01   SXY      .125821+02
                       VXX      .931954-03   VYY     -.232131-02
          NODE 85          MXX      .755700-03   MYY      .744303-03   MXY      .479019-04
          NODE 84          MXX      .395052-02   MYY      .349773-02   MXY     -.178829-03
          NODE 86          MXX     -.242760-03   MYY     -.165669-02   MXY     -.654633-04

97          CENTROID   SXX      .574952+01   SYY     -.415727+01   SXY     -.326206+01
                       VXX     -.244018-03   VYY      .159389-03
          NODE 85          MXX      .457083-03   MYY     -.118682-03   MXY      .479020-04
          NODE 86          MXX     -.396212-03   MYY     -.996473-03   MXY      .479020-04
          NODE 88          MXX     -.389194-04   MYY     -.390511-03   MXY     -.156069-03

98          CENTROID   SXX     -.587978+01   SYY     -.452641+01   SXY      .308261+01
                       VXX      .139546-03   VYY     -.281940-03
          NODE 85          MXX      .630561-03   MYY      .664945-04   MXY      .366870-04
          NODE 88          MXX      .242588-03   MYY     -.202771-03   MXY     -.771221-04
          NODE 87          MXX     -.121814-03   MYY     -.645649-03   MXY     -.255931-04

99          CENTROID   SXX     -.494285+01   SYY     -.168722+01   SXY     -.139981+01
                       VXX      .876735-04   VYY     -.159448-03
          NODE 88          MXX      .119710-05   MYY     -.344218-03   MXY     -.771223-04
          NODE 48          MXX     -.508768-03   MYY     -.856086-03   MXY     -.713426-04
          NODE 87          MXX     -.304775-03   MYY     -.358272-03   MXY     -.498184-04

100         CENTROID   SXX      .689869+01   SYY     -.208200+01   SXY      .515009+00
                       VXX      .184331-03   VYY      .222304-03
          NODE 48          MXX     -.317934-03   MYY     -.734834-03   MXY      .139997-03
          NODE 88          MXX     -.223661-03   MYY     -.593845-03   MXY     -.189011-05
          NODE 49          MXX      .410645-03   MYY      .111746-03   MXY      .747093-04

101         CENTROID   SXX     -.677208+00   SYY     -.159820+01   SXY      .103909+01
                       VXX     -.704422-04   VYY      .197879-04
          NODE 31          MXX     -.275685-03   MYY     -.717983-04   MXY     -.288006-03
          NODE 17          MXX     -.117856-03   MYY      .102634-03   MXY     -.306818-03
          NODE 16          MXX     -.612050-04   MYY      .909327-04   MXY     -.306877-03

102         CENTROID   SXX     -.187902+00   SYY     -.466867+00   SXY      .162707+01
                       VXX      .539418-04   VYY      .998428-04
          NODE 31          MXX     -.126763-03   MYY      .415110-04   MXY     -.247647-03
          NODE 55          MXX      .213809-03   MYY      .344649-03   MXY     -.253495-03
          NODE 17          MXX     -.107381-03   MYY      .910549-04   MXY     -.328161-03

103         CENTROID   SXX      .211988+01   SYY     -.538262+01   SXY      .176852+01
                       VXX      .157500-03   VYY     -.416865-04
```

	NODE 17	MXX	.382327-04	MYY	.156363-03	MXY	-.306928-03
	NODE 55	MXX	.354403-03	MYY	.456282-03	MXY	-.249924-03
	NODE 18	MXX	-.163704-03	MYY	.410106-04	MXY	-.266237-03
104	CENTROID	SXX	.402433+00	SYY	-.821380+01	SXY	-.633726+00
		VXX	.160392-03	VYY	.734417-05		
	NODE 55	MXX	.318134-03	MYY	.360743-03	MXY	-.257271-03
	NODE 19	MXX	.125278-03	MYY	.162229-03	MXY	-.249544-03
	NODE 18	MXX	-.138239-03	MYY	-.109707-04	MXY	-.242511-03
105	CENTROID	SXX	-.164685+01	SYY	-.104500-01	SXY	.290193+01
		VXX	.171684-03	VYY	.800576-04		
	NODE 55	MXX	.294960-03	MYY	.296138-03	MXY	-.198337-03
	NODE 59	MXX	.654081-03	MYY	.692591-03	MXY	-.193642-03
	NODE 19	MXX	-.780479-04	MYY	-.207759-04	MXY	-.270369-03
106	CENTROID	SXX	.633599+01	SYY	-.149436+02	SXY	.368425+01
		VXX	.251957-03	VYY	-.177481-03		
	NODE 19	MXX	.331803-03	MYY	.349991-03	MXY	-.209855-03
	NODE 59	MXX	.706196-03	MYY	.701768-03	MXY	-.670602-04
	NODE 20	MXX	-.238872-03	MYY	-.192977-03	MXY	-.134719-03
107	CENTROID	SXX	.454334+01	SYY	-.108097+02	SXY	-.873865+01
		VXX	.302775-03	VYY	.204928-03		
	NODE 59	MXX	.720431-03	MYY	.705878-03	MXY	-.679333-04
	NODE 21	MXX	.616554-03	MYY	.545061-03	MXY	.258934-04
	NODE 20	MXX	-.227293-03	MYY	-.301117-03	MXY	-.238884-04
108	CENTROID	SXX	-.449601+01	SYY	.462192+01	SXY	-.990613+00
		VXX	-.419604-05	VYY	-.606320-04		
	NODE 59	MXX	.653020-03	MYY	.363759-03	MXY	.421062-04
	NODE 71	MXX	.559972-03	MYY	.351665-03	MXY	-.876269-04
	NODE 21	MXX	.193273-03	MYY	.113425-03	MXY	-.347819-04
109	CENTROID	SXX	-.530332+01	SYY	.181889+01	SXY	-.141821+01
		VXX	-.232874-03	VYY	-.168209-03		
	NODE 21	MXX	.509442-03	MYY	.380091-03	MXY	-.687547-04
	NODE 71	MXX	.714974-03	MYY	.468085-03	MXY	-.828624-04
	NODE 22	MXX	-.917016-04	MYY	-.271657-03	MXY	-.673252-04
110	CENTROID	SXX	-.790813+01	SYY	-.200468+01	SXY	.171405+01
		VXX	-.128601-02	VYY	-.131397-02		
	NODE 22	MXX	-.118823-02	MYY	.124627-03	MXY	-.268955-03
	NODE 71	MXX	.946755-03	MYY	.187925-02	MXY	-.223571-03
	NODE 73	MXX	-.283791-02	MYY	-.169227-02	MXY	-.681471-03
111	CENTROID	SXX	.124501+01	SYY	-.524639+01	SXY	.556701+01
		VXX	-.273664-03	VYY	-.409782-03		
	NODE 73	MXX	-.587848-03	MYY	.158805-03	MXY	-.413015-03

```
          NODE 23          MXX     -.109427-02   MYY      .278930-04   MXY     -.561880-03
          NODE 22          MXX      .686945-04   MYY      .120626-02   MXY     -.240815-03

112         CENTROID   SXX      .621477+01   SYY      .392102+00   SXY      .861635+01
                       VXX      .125727-02   VYY      .432386-02
          NODE 23          MXX     -.210946-02   MYY     -.230707-02   MXY      .345773-03
          NODE 73          MXX     -.542442-02   MYY     -.561082-02   MXY      .724504-04
          NODE 75          MXX      .619556-02   MYY      .843095-02   MXY      .582787-03

113         CENTROID   SXX      .287593+01   SYY     -.898522+01   SXY      .799760+00
                       VXX      .754407-03   VYY      .498470-03
          NODE 75          MXX      .434383-02   MYY      .449112-02   MXY      .351969-03
          NODE 24          MXX      .172431-02   MYY      .183888-02   MXY      .606737-03
          NODE 23          MXX     -.109868-02   MYY      .368341-03   MXY      .702107-03

114         CENTROID   SXX      .417634+01   SYY      .419599+01   SXY      .519819+01
                       VXX      .304502-03   VYY     -.334467-02
          NODE 24          MXX      .189729-02   MYY      .248336-02   MXY      .470843-03
          NODE 75          MXX      .764897-02   MYY      .813023-02   MXY      .340642-03
          NODE 77          MXX      .136051-03   MYY     -.280868-02   MXY      .587504-03

115         CENTROID   SXX      .120954+02   SYY     -.205635+01   SXY     -.109407+02
                       VXX      .155308-03   VYY     -.722895-03
          NODE 39          MXX     -.257593-02   MYY     -.455492-02   MXY      .741942-04
          NODE 24          MXX     -.337661-03   MYY     -.209953-02   MXY      .105476-02
          NODE 77          MXX     -.230676-03   MYY     -.191514-02   MXY      .501157-03

116         CENTROID   SXX     -.512634+01   SYY     -.736203+01   SXY     -.589130+01
                       VXX     -.126777-03   VYY      .133324-02
          NODE 24          MXX     -.144119-02   MYY     -.319461-02   MXY      .108892-02
          NODE 39          MXX     -.119479-02   MYY     -.322211-02   MXY     -.143069-03
          NODE 25          MXX      .755589-03   MYY      .159926-03   MXY      .472924-03

117         CENTROID   SXX     -.505956+01   SYY     -.715968+01   SXY      .558999+01
                       VXX     -.831810-04   VYY     -.465226-03
          NODE 39          MXX     -.714138-03   MYY     -.175471-02   MXY     -.143068-03
          NODE 26          MXX      .138130-04   MYY     -.806012-03   MXY     -.999457-03
          NODE 25          MXX      .464262-03   MYY     -.247794-04   MXY     -.571263-03

118         CENTROID   SXX     -.198181+01   SYY      .116766+01   SXY      .840723+01
                       VXX      .170074-03   VYY      .593354-02
          NODE 26          MXX     -.129786-02   MYY     -.255265-02   MXY     -.525856-03
          NODE 39          MXX     -.750239-02   MYY     -.855727-02   MXY      .854175-04
          NODE 79          MXX      .359166-02   MYY      .507668-02   MXY      .214052-03

119         CENTROID   SXX      .203088+00   SYY      .115465+02   SXY      .442620+01
                       VXX      .251284-03   VYY     -.126928-02
          NODE 81          MXX      .476451-03   MYY      .673868-03   MXY     -.203877-03
          NODE 26          MXX     -.290272-03   MYY      .105200-04   MXY     -.366389-03
```

```
        NODE 79          MXX      .385347-02   MYY      .385437-02   MXY     -.275128-03

120       CENTROID   SXX      .975360+00   SYY     -.131709+02   SXY      .840017+01
                     VXX      .349515-03   VYY     -.721261-03
        NODE 26          MXX      .176409-02   MYY      .182609-02   MXY      .686697-04
        NODE 81          MXX      .265084-02   MYY      .270716-02   MXY      .221232-03
        NODE 27          MXX     -.753149-03   MYY     -.288771-03   MXY      .848836-04

121       CENTROID   SXX      .728750+01   SYY      .103620+02   SXY     -.460577+01
                     VXX      .635806-04   VYY     -.126275-02
        NODE 83          MXX     -.106795-02   MYY     -.882567-03   MXY     -.708332-04
        NODE 27          MXX     -.739495-03   MYY     -.654813-03   MXY      .221496-03
        NODE 81          MXX      .248854-02   MYY      .240207-02   MXY      .112860-03

122       CENTROID   SXX      .157012+01   SYY     -.142678+02   SXY      .373450+01
                     VXX     -.159265-03   VYY      .269538-03
        NODE 83          MXX      .437803-03   MYY      .688485-03   MXY      .412916-03
        NODE 28          MXX      .153250-03   MYY      .835357-03   MXY      .404201-03
        NODE 27          MXX     -.425557-03   MYY     -.539201-04   MXY      .541897-03

123       CENTROID   SXX      .747479+01   SYY      .231102+01   SXY     -.553322+01
                     VXX     -.247328-04   VYY      .338305-04
        NODE 28          MXX     -.253104-03   MYY      .812355-04   MXY      .412246-03
        NODE 83          MXX      .281733-03   MYY      .268048-03   MXY      .418022-03
        NODE 85          MXX      .115660-03   MYY      .272552-03   MXY      .419258-03

124       CENTROID   SXX      .100894+01   SYY     -.900406+01   SXY     -.349303+00
                     VXX     -.725560-04   VYY      .486871-04
        NODE 85          MXX     -.923348-04   MYY      .424887-03   MXY      .207476-03
        NODE 29          MXX     -.664521-04   MYY      .598031-03   MXY      .210023-03
        NODE 28          MXX     -.153177-03   MYY      .399588-03   MXY      .284347-03

125       CENTROID   SXX      .396623+01   SYY      .916648+00   SXY     -.653734+01
                     VXX     -.547435-04   VYY     -.369853-03
        NODE 87          MXX     -.792440-03   MYY     -.631266-03   MXY      .251653-03
        NODE 29          MXX     -.313755-03   MYY     -.122791-03   MXY      .202279-03
        NODE 85          MXX     -.112689-03   MYY      .388165-03   MXY      .221879-03

126       CENTROID   SXX     -.258547+01   SYY     -.221545+01   SXY     -.346411+01
                     VXX     -.148019-03   VYY     -.117367-03
        NODE 29          MXX      .161550-04   MYY      .347243-03   MXY     -.901507-05
        NODE 87          MXX     -.444752-03   MYY     -.245847-04   MXY      .121938-03
        NODE 47          MXX      .530792-04   MYY      .208743-04   MXY      .901842-04

127       CENTROID   SXX      .641901-01   SYY      .842101-01   SXY      .730074-01
                     VXX     -.236295-04   VYY     -.494234-05
        NODE 29          MXX      .790070-04   MYY      .250364-04   MXY      .152401-03
        NODE 47          MXX     -.112495-03   MYY     -.186677-03   MXY      .739917-04
        NODE 30          MXX      .249541-04   MYY     -.616257-04   MXY      .113196-03
```

```
128          CENTROID    SXX      .252921+01   SYY     -.720840+00   SXY      .153401+01
                         VXX     -.524222-04   VYY     -.144002-03
             NODE 47          MXX     -.908584-04   MYY     -.256585-03   MXY     -.189363-03
             NODE 87          MXX     -.999156-04   MYY     -.327188-03   MXY     -.507634-04
             NODE 48          MXX     -.378496-03   MYY     -.717022-03   MXY     -.131790-03
```

LOADING - DMAG

RESULTANT JOINT LOADS - SUPPORTS

JOINT		FORCES X FORCE	Y FORCE	Z FORCE	MOMENTS X MOMENT	Y MOMENT	Z MOMENT
101	GLO	.012	.000	-.017	-.001	.000	.000
102	GLO	-.000	.000	-.000	.000	.000	.000
103	GLO	-.003	.000	-.012	.000	.000	.000
104	GLO	.000	.000	-.011	.000	.000	.000
105	GLO	.002	.000	.039	.000	.000	-.000
106	GLO	-.001	.000	.016	-.000	.000	-.000
107	GLO	-.000	.000	.003	-.000	.000	.000
108	GLO	-.001	.000	-.009	-.000	.000	-.000
109	GLO	-.000	.000	-.020	.000	.000	.000
110	GLO	-.000	.000	.023	.000	.000	.000
111	GLO	-.001	.000	-.002	-.000	.000	.000
112	GLO	-.002	.000	.002	.000	.000	.000
113	GLO	-.002	.000	.001	-.000	.000	.000
114	GLO	-.002	.000	.002	.000	.000	.000
115	GLO	-.002	.000	.001	-.000	.000	.000
116	GLO	.000	.000	.001	-.000	.000	.000
117	GLO	.000	.000	-.001	-.000	.000	-.000
118	GLO	.000	.000	.000	-.000	.000	.000
119	GLO	.000	.000	-.003	-.000	.000	.000
120	GLO	.000	.000	.001	-.000	.000	.000
121	GLO	.000	.000	-.021	-.000	.000	-.000
122	GLO	.000	.000	-.020	-.000	.000	-.000
123	GLO	.000	.000	-.050	-.000	.000	-.000
124	GLO	.000	.000	-.012	.000	.000	-.000
125	GLO	.000	.000	.005	-.000	.000	.000
126	GLO	.000	.000	-.019	-.000	.000	.000
127	GLO	.000	.000	.001	.000	.000	-.000
128	GLO	.000	.000	.007	-.000	.000	.000
129	GLO	.000	.000	.001	.000	.000	-.000
130	GLO	.000	.000	.000	-.000	.000	.000
131	GLO	.000	.000	-.001	.000	.000	.000
132	GLO	.000	.000	-.015	.000	.000	.000
133	GLO	.000	.000	-.002	.000	.000	.000
134	GLO	.000	.000	-.017	.000	.000	-.000
135	GLO	.000	.000	-.001	.000	-.000	-.000
136	GLO	.000	.000	-.003	.000	-.000	-.000
137	GLO	.000	.000	.002	.000	-.000	-.000
138	GLO	.000	.000	.016	.000	.000	.000
139	GLO	.000	-.017	-.035	.004	.000	-.000
140	GLO	.000	-.018	-.026	.004	-.000	.000
141	GLO	.000	-.012	-.035	.003	.000	.000
142	GLO	.000	-.007	-.089	.002	-.000	-.000
143	GLO	.000	-.008	-.020	.003	-.000	.000
144	GLO	.000	-.008	-.018	.003	-.000	.000
145	GLO	.000	-.011	-.007	.003	.000	.000

146	GLO	.000	-.009	-.038	.002	.000	-.000
147	GLO	.000	.000	.008	.000	-.000	-.000
148	GLO	.000	.000	.005	.000	.000	.000
149	GLO	.000	.000	.002	.000	-.000	.000
150	GLO	.000	.000	.030	.000	.000	.000
151	GLO	.000	.000	.001	.006	.000	.000
152	GLO	.000	.000	-.009	.000	.000	-.000
153	GLO	.000	.000	-.000	.000	-.000	-.000
154	GLO	.000	.000	.001	.000	.000	.000
	TOTALS	-.000	-.091	-.344	.024	.000	.001

RESULTANT JOINT DISPLACEMENTS - SUPPORTS

JOINT		/----------DISPLACEMENTS----------/			/----------ROTATIONS----------/		
		X DISPL	Y DISPL	Z DISPL	X ROT	Y ROT	Z ROT
101	GLO	.000	.000	.000	.000	-.000	.000
102	GLO	.000	.000	.000	.000	-.000	.000
103	GLO	.000	.00	.000	.000	.000	.000
104	GLO	.000	.000	.000	.000	-.000	.000
105	GLO	.000	.000	.000	.000	-.000	.000
106	GLO	.000	.000	.000	.000	-.000	.000
107	GLO	.000	.000	.000	.000	-.000	.000
108	GLO	.000	.000	.000	.000	-.000	.000
109	GLO	.000	.000	.000	.000	.000	.000
110	GLO	.000	.000	.000	.000	.000	.000
111	GLO	.000	.000	.000	.000	.000	.000
112	GLO	.000	.000	.000	.000	.000	.000
113	GLO	.000	.000	.000	.000	.000	.000
114	GLO	.000	.000	.000	.000	.000	.000
115	GLO	.000	.000	.000	.000	.000	.000
116	GLO	-.000	.000	.000	.000	.000	.000
117	GLO	-.000	.000	.000	.000	-.000	.000
118	GLO	.000	.000	.000	.000	-.000	.000
119	GLO	.000	.000	.000	.000	-.000	.000
120	GLO	.000	.000	.000	.000	-.000	.000
121	GLO	.000	.000	.000	.000	-.000	.000
122	GLO	.000	.000	.000	.000	-.000	.000
123	GLO	.000	.000	.000	.000	-.000	.000
124	GLO	.000	.000	.000	.000	-.000	.000
125	GLO	.000	.000	.000	.000	-.000	.000
126	GLO	.000	.000	.000	.000	-.000	.000
127	GLO	.000	.000	.000	.000	-.000	.000
128	GLO	.000	.000	.000	.00	-.000	.000
129	GLO	.000	.000	.000	.000	-.000	.000
130	GLO	.000	.000	.000	.000	.000	.000
131	GLO	-.000	.000	.000	.000	.000	.000
132	GLO	-.000	.000	.000	.000	.000	.000
133	GLO	-.000	.000	.000	.000	.000	.000
134	GLO	-.000	.000	.000	.000	.000	.000
135	GLO	-.000	.000	.000	.000	.000	.000
136	GLO	-.000	.000	.000	-.000	.000	.000
137	GLO	-.000	.000	.000	-.000	.000	.000
138	GLO	-.000	.000	.000	.000	.000	.000

SUMMARY

A STRESS ANALYSIS WAS PERFORMED ON THE ANTENNA ADAPTER MOUNT (649-2848-001) UNDER WHAT WAS CONSIDERED A WORST CASE AERODYNAMIC LOADING CONDITION OF THE ANTENNA. THE ANALYSIS OF THE CASTING SHOWS THAT IT IS OF SUFFICIENT STRENGTH TO CARRY ALL INDUCED LOADS WITH THE FOLLOWING MARGINS-OF-SAFETY (CASTING FACTOR OF 2.0 INCLUDED):

MS (CASTING TENSILE YIELD) = +2.24

MS (CASTING SHEAR ULT) = +11.2

MS (ATTACHMENT BOLTS TENSION) = +30.4

AD-A095 634 ROCKWELL INTERNATIONAL DALLAS TEX COLLINS RADIO GROUP F/G 1/3
STRESS ANALYSIS OF AIRCRAFT MODIFICATIONS (C-141B AIRCRAFT). JO--ETC(U)
OCT 80 D B RAGAN F09603-80-C-0602

UNCLASSIFIED NL

2 OF 2
AD
A095634

END
DATE
FILMED
3-81
DTIC

TABLE OF CONTENTS

SECTION		PAGE
1.0	INTRODUCTION	98
2.0	LOCATION OF THE NODE POINTS	100
3.0	LOCATION OF THE FINITE ELEMENTS	106
4.0	PROPERTIES OF THE STRUCTURAL COMPONENTS	115
5.0	LOADING OF THE CASTING STRUCTURE	116
6.0	MISCELLANEOUS ANALYSIS AND EXCUTION STATEMENTS	120
7.0	RESULTS OF THE COMPUTER ANALYSIS	121
8.00	FORCES INDUCED INTO THE AIRCRAFT	126

APPENDICES

A	AERODYNAMIC LOADING CALCULATIONS
B	LISTING OF COMPUTER RESULTS

'C141-B' 'DM C34-3/B UHF ANTENNA MOD'

```
*****************************************
*                                       *
*            ICES STRUDL-II             *
*      THE STRUCTURAL DESIGN LANGUAGE   *
*                                       *
*   CIVIL ENGINEERING SYSTEMS LABORATORY *
*   MASSACHUSETTS INSTITUTE OF TECHNOLOGY *
*         CAMBRIDGE, MASSACHUSETTS      *
*                                       *
*       17.14.36        22 AUG 80       *
*                                       *
*       UNIVAC 1100 SERIES  EXEC 8      *
*             VERSION 2.7               *
*                                       *
*****************************************
```

PREPARED BY MAARTEN VET

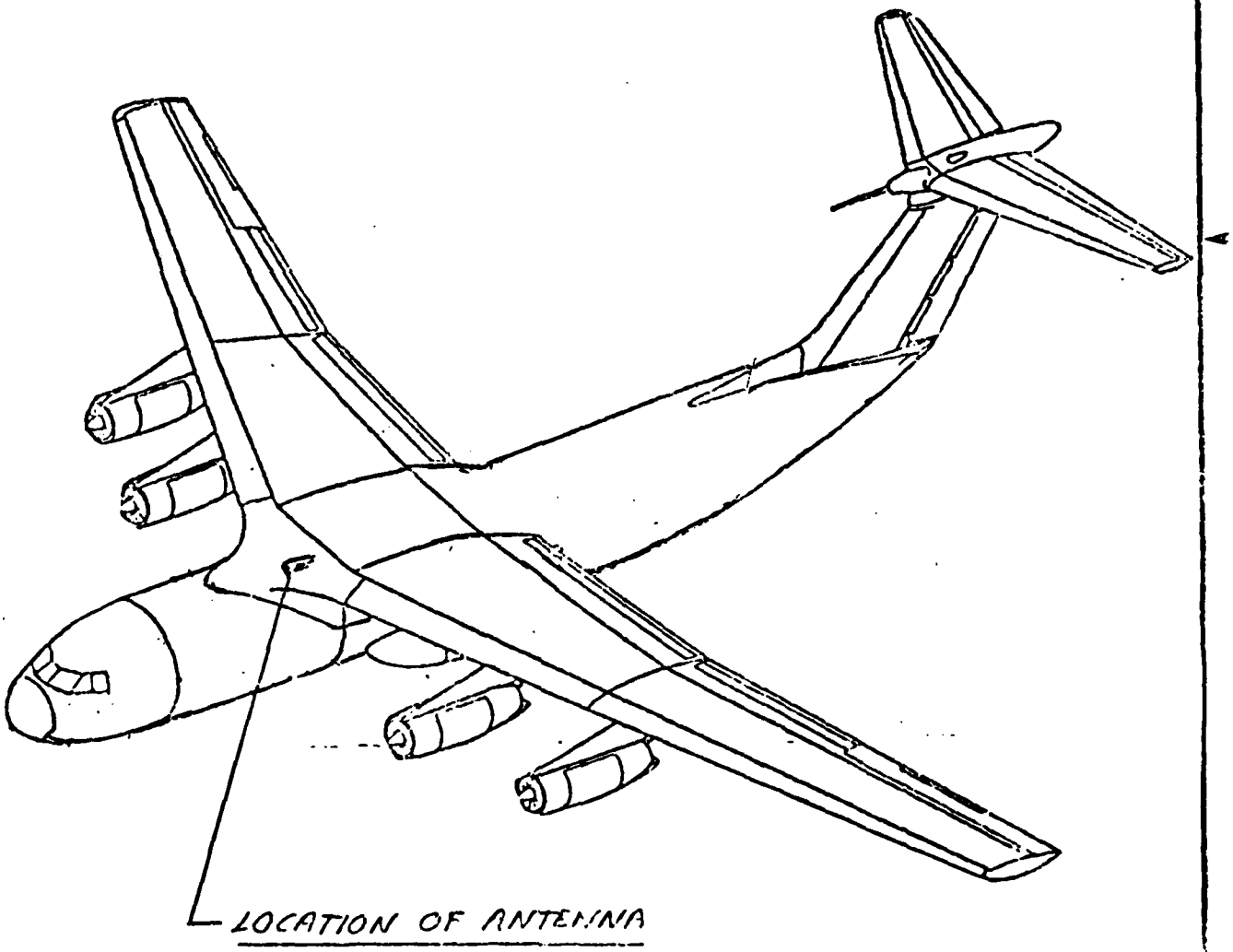

SIZE	CODE IDENT	DWG NO.
A	13499	649-2924-001
SCALE	REV	SHEET 97

1.0 INTRODUCTION

A STRESS ANALYSIS WILL BE PERFORMED ON THE ADAPTER CASTING WHICH IS THE TRANSITION BETWEEN THE DM C34-3/B UHF ANTENNA AND THE FUSELAGE OF THE C141-B AIRCRAFT. THE ADAPTER WAS ADDED TO COMPENSATE FOR THE 7-DEGREE FORWARD SLOPE OF THE FUSELAGE; THUS THE ANTENNA WILL FLY WITH A ZERO ANGLE OF ATTACK. THE LOADINGS TO BE CONSIDERED ARE THE AERODYNAMIC FORCES INDUCED DUE TO EITHER THE MAXIMUM PERMISSIBLE VELOCITY OF 380 KNOTS AT SEA LEVEL OR MACH 0.85 ABOVE 23,000 FEET ALTITUDE; WHICHEVER PRESENTS THE WORST CASE CONDITION. HOWEVER, TO ENSURE THAT A CONSERVATIVE ANALYSIS IS PRESENTED, THE AERODYNAMIC FORCES WILL BE CALCULATED FOR AN ARBITRARY 10-DEGREE ANGLE OF ATTACK; SUCH AS MANY BE ENCOUNTERED DURING TAKEOFF OR SHARP MANUEVERING IN FLIGHT.

THE CASTING WILL BE MODELED USING TRIANGULAR PLATE ELEMENTS FOR THE BASIC CASTING WALLS AND TRIDIMENSIONAL ELEMENTS FOR THE HOLD-DOWN BOSSES. THE CASTING MATERIAL IS ALUMINUM ALLOY A356-T6.

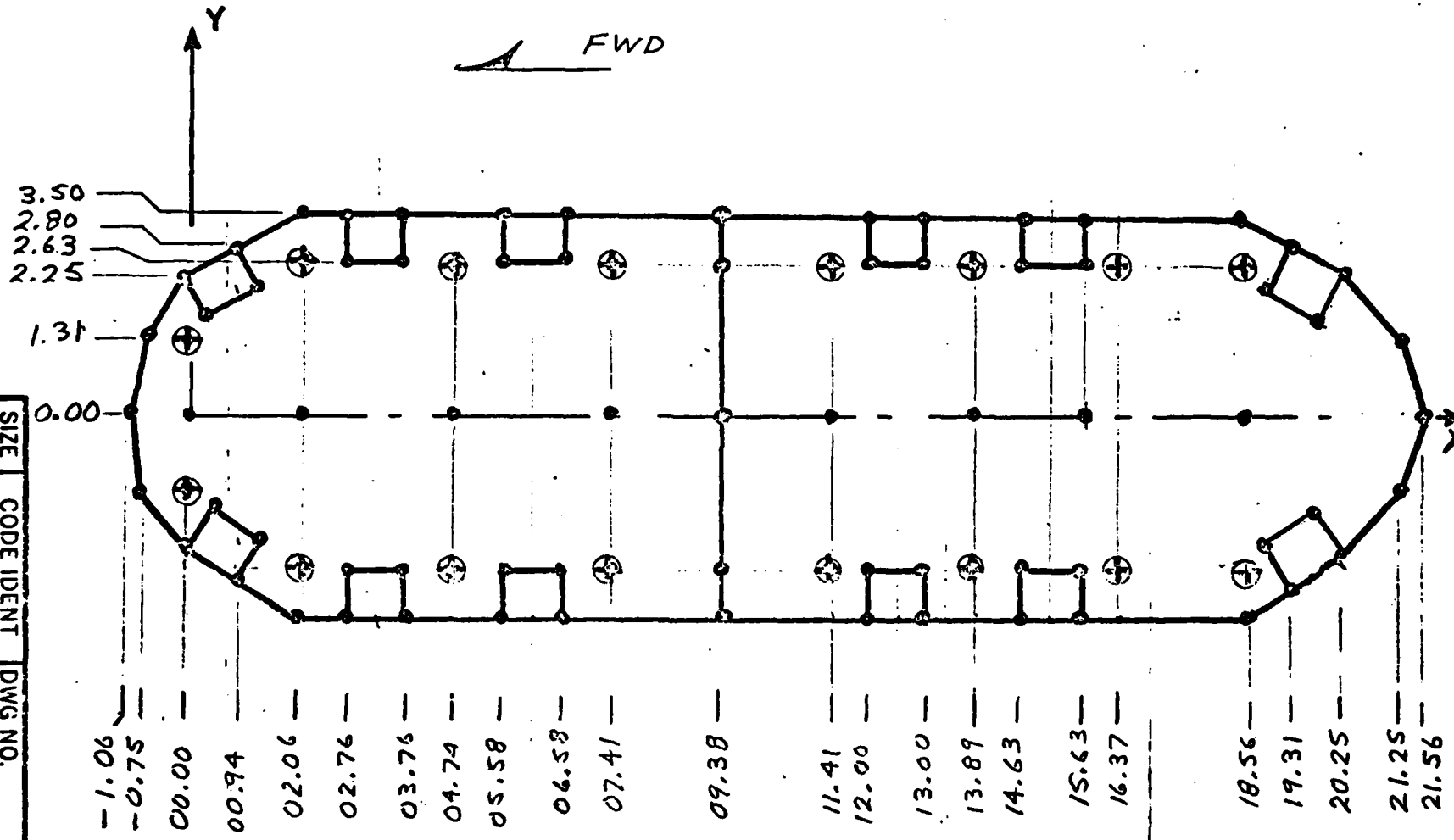

GENERAL OUTLINE
OF THE
ANTENNA MOUNT

SIZE	CODE IDENT	DWG NO.
A	13499	649-2924-001
SCALE	REV	SHEET 99

2.0--LOCATION OF THE NODE POINTS

UNITS INCHES,DEGREES

2.1--LOWER SLOPING PLANE

NODE	COORDINATES X	Y	Z
1	-1.06	+0.00	-.13
2	-0.75	-1.31	-.09
3	00.00	-2.25	0.00
4	00.94	-2.88	0.12
5	02.06	-3.50	0.25
6	02.76	-3.50	0.34
7	03.76	-3.50	0.46
8	05.58	-3.50	0.69
9	06.58	-3.50	0.81
10	09.38	-3.50	1.15
11	12.00	-3.50	1.47
12	13.00	-3.50	1.60
13	14.63	-3.50	1.80
14	15.63	-3.50	1.92
15	18.56	-3.50	2.28
16	19.31	-3.00	2.37
17	20.25	-2.38	2.49
18	21.25	-1.31	2.61
19	21.56	+0.00	2.65
20	09.38	-2.63	1.15
21	09.38	+0.00	1.15
22	-0.75	+1.31	-.09
23	00.00	+2.25	0.00
24	00.94	+2.88	0.12
25	02.06	+3.50	0.25
26	02.76	+3.50	0.34
27	03.76	+3.50	0.46
28	05.58	+3.50	0.69
29	06.58	+3.50	0.81
30	09.38	+3.50	1.15
31	12.00	+3.50	1.47
32	13.00	+3.50	1.60
33	14.63	+3.50	1.80
34	15.63	+3.50	1.92
35	16.56	+3.50	2.28
36	19.31	+3.00	2.37
37	20.25	+2.38	2.49
38	21.25	+1.31	2.61
39	09.38	+2.63	1.15
40	00.50	-1.50	0.06
41	01.38	-2.13	0.17
42	02.76	-2.63	0.34
43	03.76	-2.63	0.46
44	05.58	-2.63	0.69
45	06.58	-2.63	0.81
46	12.00	-2.63	1.47
47	13.00	-2.63	1.60
48	14.63	-2.63	1.80
49	15.63	-2.63	1.92
50	18.88	-2.25	2.32
51	19.75	-1.69	2.42
52	00.50	+1.50	0.06
53	01.38	+2.13	0.17
54	02.76	+2.63	0.34
55	03.76	+2.63	0.46
56	05.58	+2.63	0.69
57	06.58	+2.63	0.81
58	12.00	+2.63	1.47
59	13.00	+2.63	1.60
60	14.63	+2.63	1.80
61	15.63	+2.63	1.92
62	18.88	+2.25	2.32
63	19.75	+1.69	2.42

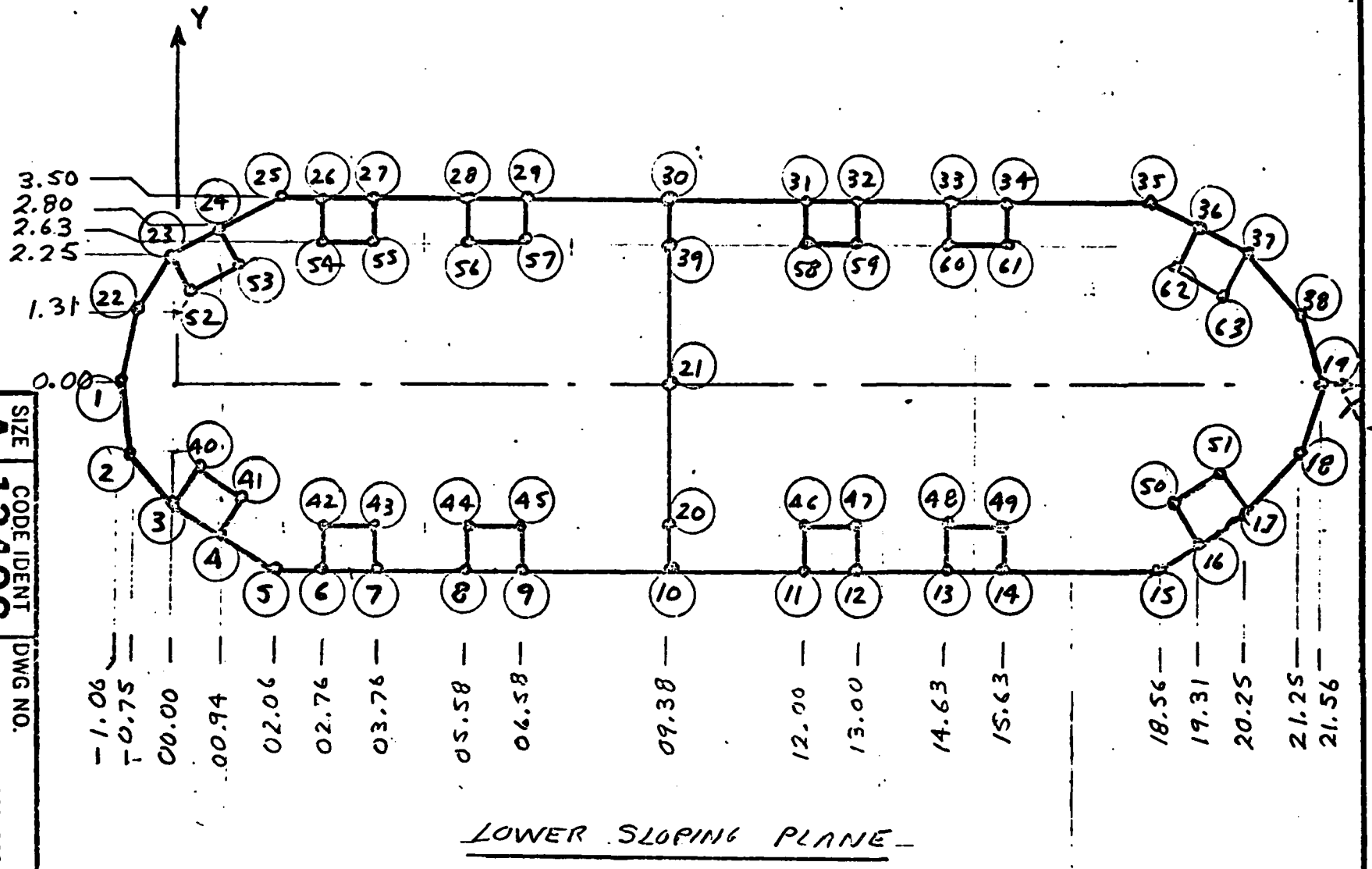

LOWER SLOPING PLANE

SIZE	CODE IDENT	DWG NO.
A	13499	649-2924-001
SCALE	REV	SHEET 101

2.2--UPPER PLANE

NODE	COORDINATES X	Y	Z
101	-1.06	+0.00	3.20
102	-0.75	-1.31	3.20
103	00.00	-2.25	3.20
104	00.94	-2.88	3.20
105	02.06	-3.50	3.20
106	02.76	-3.50	3.20
107	03.76	-3.50	3.20
108	05.58	-3.50	3.20
109	06.58	-3.50	3.20
110	09.58	-3.50	3.20
111	12.00	-3.50	3.20
112	13.00	-3.50	3.20
113	14.63	-3.50	3.20
114	15.63	-3.50	3.20
115	18.56	-3.50	3.20
116	19.31	-3.00	3.20
117	20.25	-2.36	3.20
118	21.25	-1.31	3.20
119	21.56	+0.00	3.20
120	09.58	-2.63	3.20
121	09.58	+0.00	3.20
122	-0.75	+1.31	3.20
123	00.00	+2.25	3.20
124	00.94	+2.88	3.20
125	02.06	+3.50	3.20
126	02.76	+3.50	3.20
127	03.76	+3.50	3.20
128	05.58	+3.50	3.20
129	06.58	+3.50	3.20
130	09.58	+3.50	3.20
131	12.00	+3.50	3.20
132	13.00	+3.50	3.20
133	14.63	+3.50	3.20
134	15.63	+3.50	3.20
135	16.56	+3.50	3.20
136	19.31	+3.00	3.20
137	20.25	+2.38	3.20
138	21.25	+1.31	3.20
139	09.58	+2.63	3.20
140	00.50	-1.50	3.20
141	01.58	-2.13	3.20
142	02.76	-2.63	3.20
143	03.76	-2.63	3.20
144	05.58	-2.63	3.20
145	06.58	-2.63	3.20
146	12.00	-2.63	3.20
147	13.00	-2.63	3.20
148	14.63	-2.63	3.20
149	15.63	-2.63	3.20
150	18.88	-2.25	3.20
151	19.75	-1.69	3.20
152	00.50	+1.50	3.20
153	01.58	+2.13	3.20
154	02.76	+2.63	3.20
155	03.76	+2.63	3.20
156	05.58	+2.63	3.20
157	06.58	+2.63	3.20
158	12.00	+2.63	3.20
159	13.00	+2.63	3.20
160	14.63	+2.63	3.20
161	15.63	+2.63	3.20
162	18.88	+2.25	3.20
163	19.75	+1.69	3.20
165	02.06	+0.00	3.20
164	00.00	+0.00	3.20
166	04.74	+0.00	3.20
167	07.41	+0.00	3.20
168	11.41	+0.00	3.20
169	13.89	+0.00	3.20
170	15.63	+0.00	3.20
171	18.56	+0.00	3.20
172	00.00	-1.31	3.20
173	02.06	-2.63	3.20
174	04.74	-2.63	3.20
175	07.41	-2.63	3.20
176	11.41	-2.63	3.20
177	13.89	-2.63	3.20
178	18.56	-2.63	3.20
179	00.00	+1.31	3.20
180	02.06	+2.63	3.20
181	04.74	+2.63	3.20
182	07.41	+2.63	3.20
183	11.41	+2.63	3.20
184	13.89	+2.63	3.20
185	18.56	+2.63	3.20
186	16.37	-2.63	3.20
187	16.37	+2.63	3.20

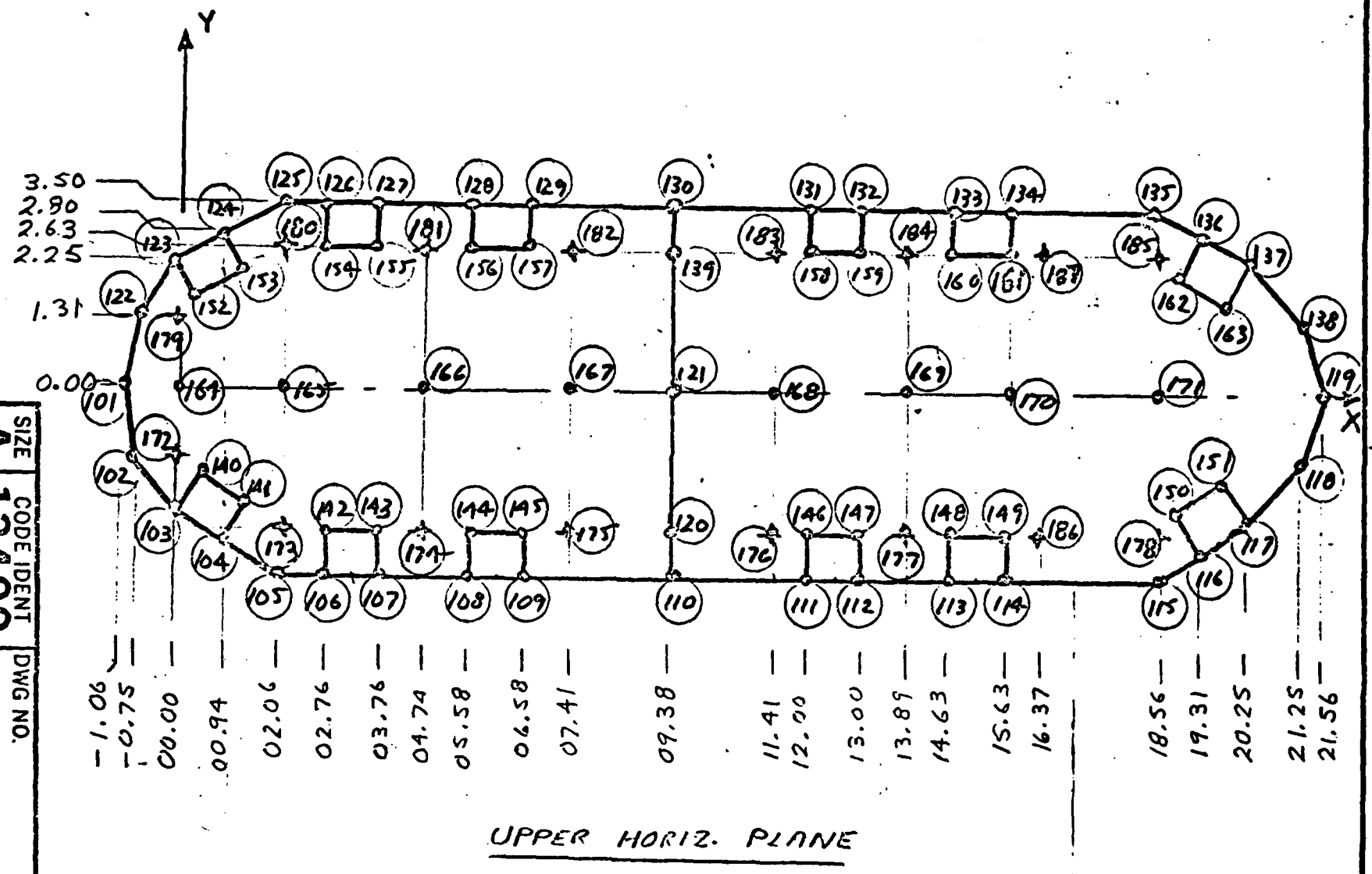

UPPER HORIZ. PLANE

SIZE	CODE IDENT	DWG NO.
A	13499	649-2924-001
SCALE	REV	SHEET 103

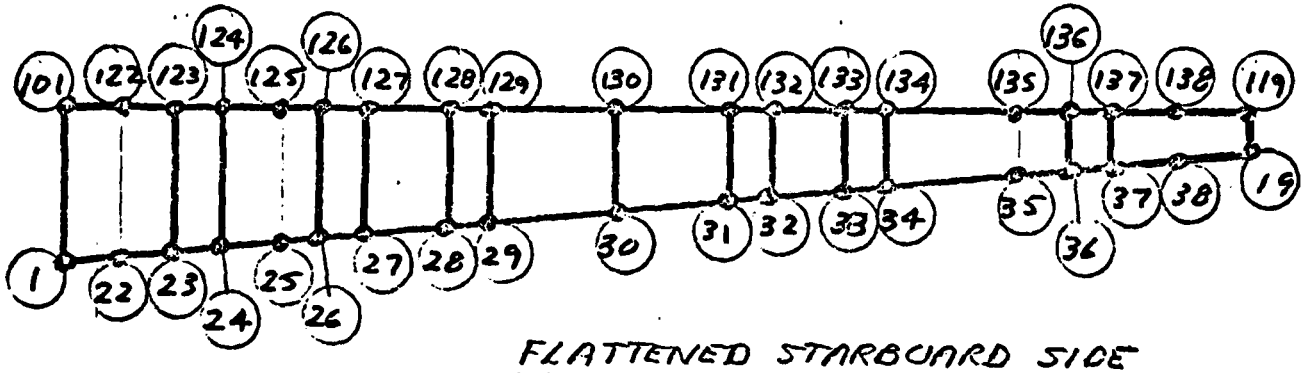

FLATTENED STARBOARD SIDE

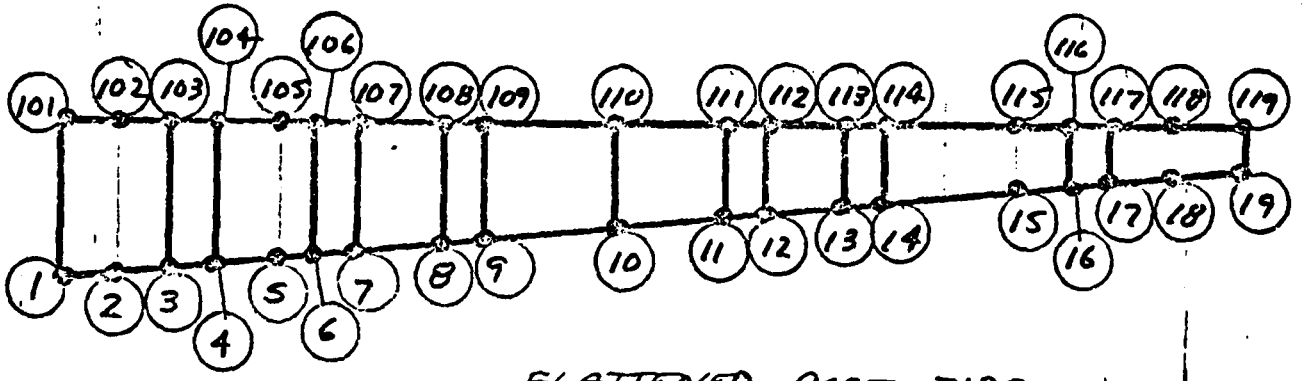

FLATTENED PORT SIDE

SIZE	CODE IDENT	DWG NO.
A	13499	649-2924-001
SCALE	REV	SHEET 104

2.3--SUPPORT NODES

NODE	COORDINATES X	Y	Z	
220	09.58	-2.63	0.15	SUPPORT
221	09.58	+0.00	0.15	SUPPORT
239	09.58	+2.63	0.15	SUPPORT
240	00.50	-1.50	-.94	SUPPORT
241	01.38	-2.13	-.83	SUPPORT
242	02.76	-2.63	-.66	SUPPORT
243	03.76	-2.63	-.54	SUPPORT
244	05.58	-2.63	-.31	SUPPORT
245	06.58	-2.63	-.19	SUPPORT
246	12.00	-2.63	0.47	SUPPORT
247	13.00	-2.63	0.60	SUPPORT
248	14.63	-2.63	0.80	SUPPORT
249	15.63	-2.63	0.92	SUPPORT
250	18.88	-2.25	1.32	SUPPORT
251	19.75	-1.69	1.42	SUPPORT
252	00.50	+1.50	-.94	SUPPORT
253	01.38	+2.13	-.83	SUPPORT
254	02.76	+2.63	-.66	SUPPORT
255	03.76	+2.63	-.54	SUPPORT
256	05.58	+2.63	-.31	SUPPORT
257	06.58	+2.63	-.19	SUPPORT
258	12.00	+2.63	0.47	SUPPORT
259	13.00	+2.63	0.60	SUPPORT
260	14.63	+2.63	0.80	SUPPORT
261	15.63	+2.63	0.92	SUPPORT
262	18.88	+2.25	1.32	SUPPORT
263	19.75	+1.69	1.42	SUPPORT

NODE	RELEASES
220,239	FORCE Y
240 TO 263	FORCE Y

3.0--LOCATION OF THE FINITE ELEMENTS

3.1--UPPER HORIZONTAL SURFACE

TYPE BENDING

ELEMENT	INCIDENCES		
1	101	172	164
2	172	101	102
3	102	103	172
4	172	103	140
5	104	173	141
6	173	104	105
7	106	173	105
8	173	106	142
9	107	174	143
10	107	108	174
11	174	108	144
12	109	175	145
13	109	110	175
14	175	110	120
15	110	176	120
16	110	111	176
17	176	111	146
18	112	177	147
19	112	113	177
20	177	113	148
21	114	186	149
22	114	115	186
165	186	115	178
23	115	116	178
24	178	116	150
25	118	151	117
26	119	151	118
27	163	119	138
28	138	137	163
29	136	185	162
30	185	136	135
31	135	134	187
32	187	134	161
166	135	187	185
33	133	184	160
34	133	132	184
35	184	132	159
36	131	183	158
37	131	130	183
38	183	130	139
39	130	182	139
40	130	129	157
41	182	129	157
42	128	181	156

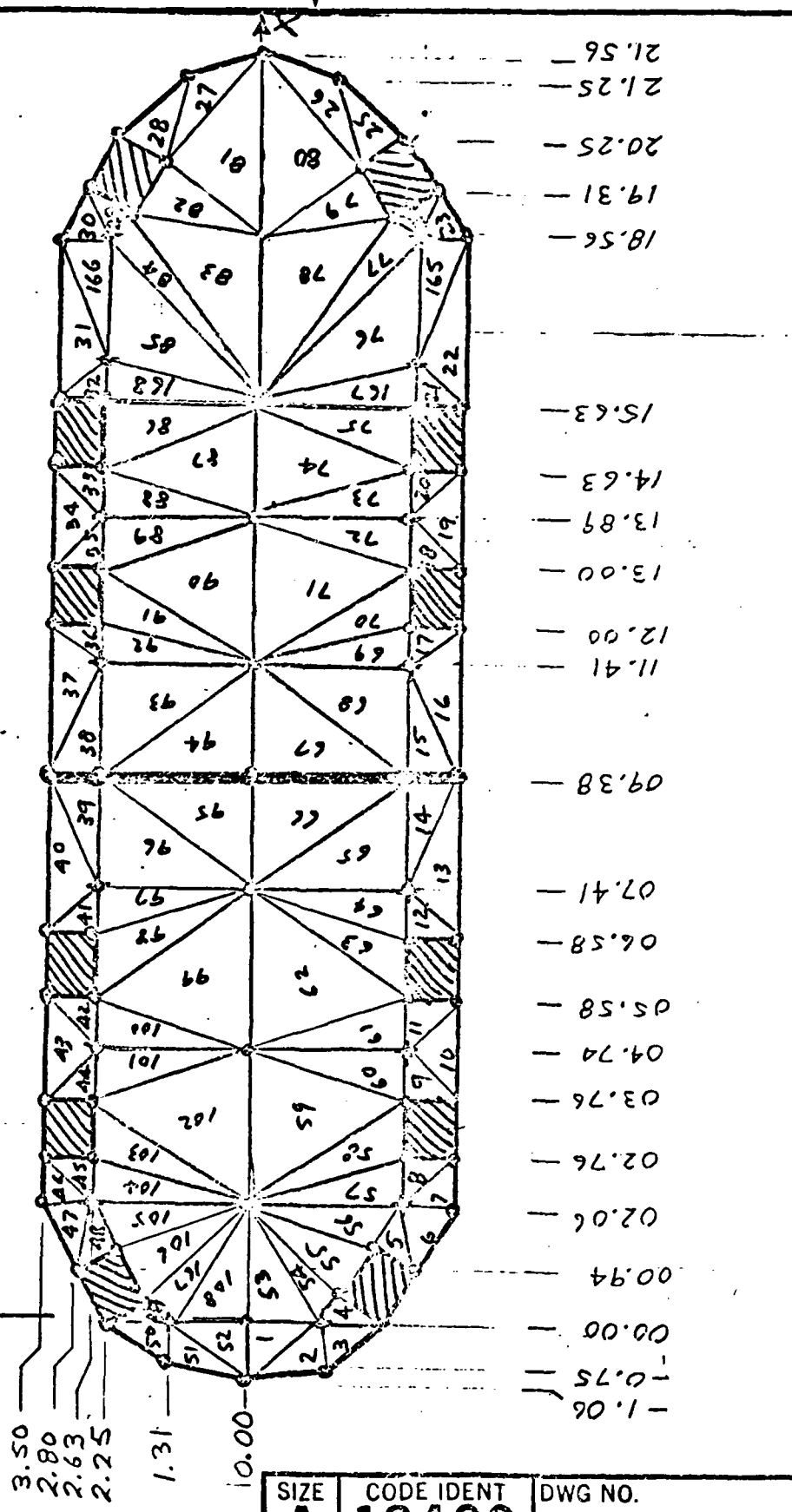

SIZE	CODE IDENT	DWG NO.
A	13499	649-2924-001
SCALE	REV	SHEET 107

43	128	127	181
44	181	127	155
45	126	180	154
46	180	126	125
47	125	124	180
48	180	124	153
49	123	179	152
50	123	122	179
51	101	179	122
52	179	101	164
53	172	165	164
54	165	172	140
55	141	165	140
56	173	165	141
57	142	165	173
58	143	165	142
59	165	143	166
60	166	143	174
61	144	166	174
62	144	167	166
63	167	144	145
64	167	145	175
65	120	167	175
66	167	120	121
67	120	168	121
68	168	120	176
69	146	168	176
70	147	168	146
71	168	147	169
72	169	147	177
73	148	169	177
74	169	148	170
75	170	148	149
167	186	170	149
76	178	170	186
77	170	178	150
78	170	150	171
79	171	150	151
80	119	171	151
81	171	119	163
82	162	171	163
83	162	170	171
84	170	162	185
85	170	185	187
168	170	187	161
86	160	170	161
87	170	160	169
88	169	160	184
89	159	169	184
90	159	168	169
91	168	159	158
92	168	158	183
93	139	168	183
94	168	139	131
95	139	167	121
96	167	139	182
97	157	167	182
98	156	167	157
99	167	156	166
100	166	156	181
101	155	166	156
102	155	165	166
103	165	155	154
104	165	154	180
105	165	180	153
106	152	165	153
107	165	152	179
108	165	179	164

SIZE	CODE IDENT	DWG NO.
A	13499	649-2924-001
SCALE	REV	SHEET 108

3.2--VERTICAL SIDE ELEMENTS

TYPE BENDING

ELEMENT INCIDENCES

109	1	102	101
110	102	1	2
111	3	102	2
112	102	3	103
113	4	105	104
114	105	4	5
115	6	105	5
116	105	6	106
117	7	108	107
118	108	7	8
119	9	110	109
120	110	9	10
121	11	110	10
122	110	11	111
123	12	113	112
124	113	12	13
125	14	115	114
126	115	14	15
127	16	115	15
128	115	16	116
129	17	118	117
130	118	17	18
131	19	118	18
132	118	19	119
133	1	122	101
134	122	1	22
135	23	122	22
136	122	23	123
137	24	125	124
138	125	24	25
139	26	125	25
140	125	26	126
141	27	128	127
142	128	27	28
143	29	130	129
144	130	29	30
145	31	130	30
146	130	31	131
147	32	133	132
148	133	32	33
149	34	135	134
150	135	34	35
151	36	135	35
152	135	36	136
153	37	138	137
154	138	37	38
155	19	138	38
156	138	19	119

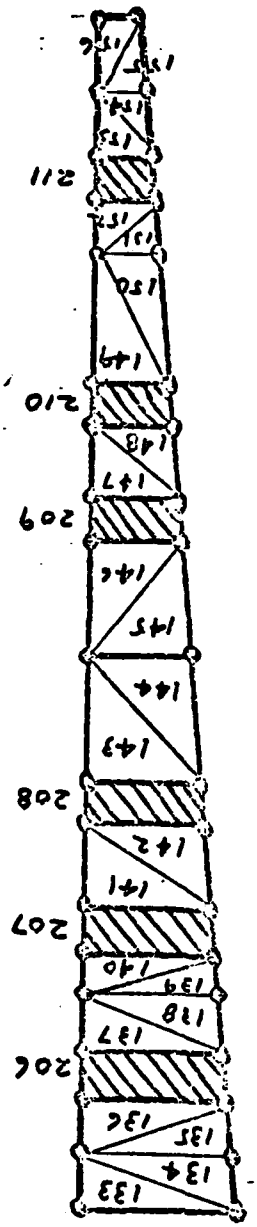

FLATTENED STARBOARD SIDE

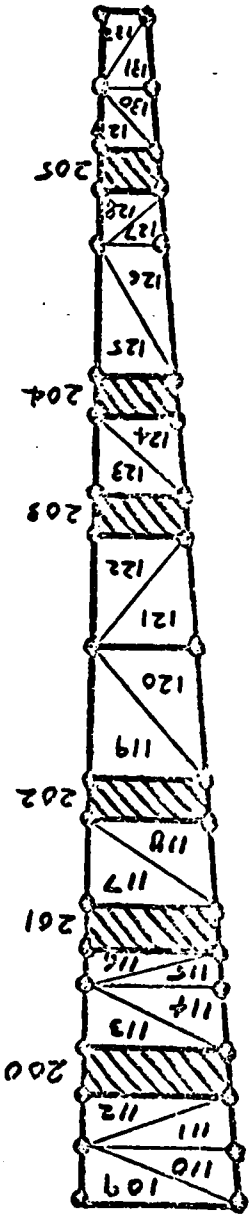

FLATTENED PORT SIDE

SIZE	CODE IDENT	DWG NO.
A	13499	649-2924-001
SCALE	REV	SHEET 110

3.3--CAST BOSSES

TYPE TRIDIMENSIONAL

ELEMENT	INCIDENCES							
200	3	4	104	103	40	41	141	140
201	6	7	107	106	42	43	143	142
202	8	9	109	108	44	45	145	144
203	11	12	112	111	46	47	147	146
204	13	14	114	113	48	49	149	148
205	16	17	117	116	50	51	151	150
206	52	53	153	152	23	24	124	123
207	54	55	155	154	26	27	127	126
208	56	57	157	156	28	29	129	128
209	58	59	159	158	31	32	132	131
210	60	61	161	160	33	34	134	133
211	62	63	163	162	36	37	137	136

3.4--TRANSVERSE RIB

TYPE BENDING

ELEMENT INCIDENCES

157	110	20	10
158	20	110	120
159	121	20	120
160	20	121	21
161	121	39	21
162	39	121	139
163	130	39	139
164	39	130	30

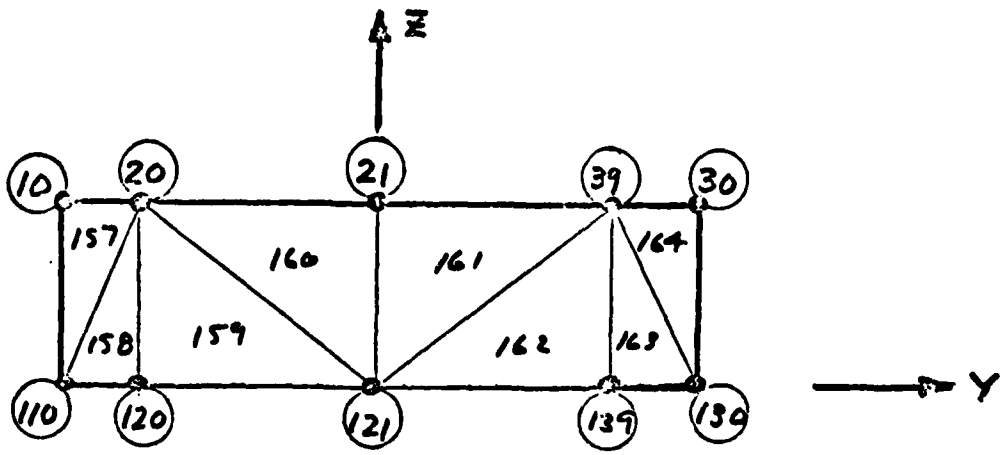

TRANSVERSE RIB

(X= 09.38)

SIZE	CODE IDENT	DWG NO.
A	13499	649-2924-001
SCALE	REV	SHEET 112

3.5--SUPPORT MEMBERS

TYPE SPACE FRAME

MEMBER	INCIDENCES	
300	220	20
301	221	21
302	239	39
303	240	40
304	241	41
305	242	42
306	243	43
307	244	44
308	245	45
309	246	46
310	247	47
311	248	48
312	249	49
313	250	50
314	251	51
315	252	52
316	253	53
317	254	54
318	255	55
319	256	56
320	257	57
321	258	58
322	259	59
323	260	60
324	261	61
325	262	62
326	263	63

3.6--DUMMY FRAMING MEMBERS

IN ORDER TO HAVE COMPATIBILITY OF DEGREES-OF-FREEDOM AT ALL THE NODE POINTS, THIN DUMMY MEMBERS WILL BE USED TO MAKE UP A VIRTUAL FRAME HAVING INSIGNIFICANT STIFFNESS.

TYPE SPACE FRAME

MEMBER	INCIDENCES	
400	1	2
401	2	3
402	3	4
403	4	5
404	5	6
405	6	7
406	7	8
407	8	9
408	9	10
409	10	11
410	11	12
411	12	13
412	13	14
413	14	15
414	NOT	USED
415	15	16
416	16	17
417	17	18
418	18	19
419	1	22
420	22	23
421	23	24
422	24	25
423	25	26
424	26	27
425	27	28
426	28	29
427	29	30
428	30	31
429	31	32
430	32	33
431	33	34
432	34	35
433	35	36
434	36	37
435	37	38
436	38	29
437	101	102
438	102	103
439	103	104
440	104	105
441	105	106
442	106	107
443	107	108
444	108	109
445	109	110
446	110	111
447	111	112
448	112	113
449	113	114
450	114	115
451	115	116
452	116	117
453	117	118
454	118	119
455	101	122
456	122	123
457	123	124
458	124	125
459	125	126
460	126	127
461	127	128
462	128	129
463	129	130
464	130	131
465	131	132
466	132	133
467	133	134
468	134	135
469	135	136
470	136	137
471	137	138
472	138	119
473	1	101
474	2	102
475	5	105
476	10	110
477	15	115
478	18	118
479	19	119
480	22	122
481	25	125
482	30	130
483	35	135
484	38	138

4.0--PROPERTIES OF THE STRUCTURAL COMPONENTS

ELEMENT	PROPERTIES			
1 TO 108	TYPE	'SBCT'	THICKNESS	.190
109 TO 114	TYPE	'SBCT'	THICKNESS	.375
115 TO 128	TYPE	'SBCT'	THICKNESS	.190
129 TO 132	TYPE	'SBCT'	THICKNESS	1.25
133 TO 138	TYPE	'SBCT'	THICKNESS	.375
139 TO 152	TYPE	'SBCT'	THICKNESS	.190
153 TO 156	TYPE	'SBCT'	THICKNESS	1.25
157 TO 164	TYPE	'SBCT'	THICKNESS	1.00
165 TO 168	TYPE	'SBCT'	THICKNESS	.190
200 TO 211	TYPE	'IPLSCSH'		

MEMBER	PROPERTIES					
300 TO 326	AX .0228	IX .0002	IY .0001	SY .0007	IZ .0001	SZ .0007
400 TO 413	AX .0361	IX .0002	IY .0001	IZ .0001		
415 TO 484	AX .0361	IX .0002	IY .0001	IZ .0001		

CONSTANTS	
E 1.00E7	ALL
G 3.80E6	ALL
POISSON .33	ALL
E 2.90E7	300 TO 326
G 1.20E7	300 TO 326
POISSON .30	300 TO 326

5.0--LOADING OF THE CASTING STRUCTURE

THE LOADING TO BE APPLIED IS FOR THE SEA LEVEL FLIGHT AT THE MAXIMUM VELOCITY OF 380-KNOTS. THIS CONDITION RESULTS IN THE WORST-CASE DYNAMIC LOADING.

DRAG FORCE	90.90-LB.
LIFT FORCE	338.0-LB.
MOMENT	2360 IN.-LB.

LOADING 'DRAG'

NODE	LOADS			
172,179	FORCE X	+5.68	FORCE Z	+42.82
173,180	FORCE X	+5.68	FORCE Z	+40.41
174,181	FORCE X	+5.68	FORCE Z	+37.28
175,182	FORCE X	+5.68	FORCE Z	+34.16
176,183	FORCE X	+5.68	FORCE Z	+29.49
177,184	FORCE X	+5.68	FORCE Z	+26.59
186,187	FORCE X	+5.68	FORCE Z	+23.69
178,185	FORCE X	+5.68	FORCE Z	-65.44

ANTENNA ATTACHMENT LOADS *

ASSUMPTION: THE ANTENNA STIFFNESS IS OF SUCH MAGNITUDE THAT THE ANTENNA TENDS TO ROTATE AS A RIGID BODY ABOUT ITS AFT EDGE.

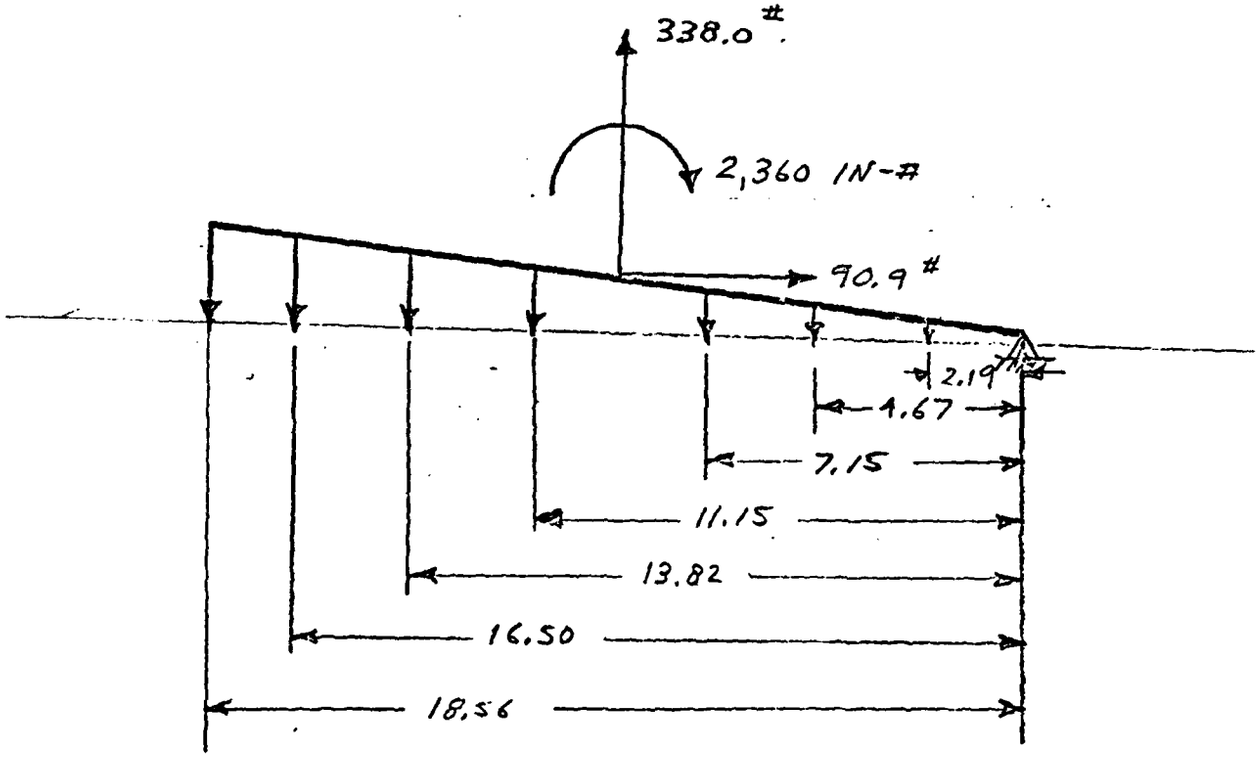

LIFT LOADING

EACH NODE $F_Z = + \frac{338.0}{16} = + 21.13$

DRAG LOADING

EACH NODE $F_X = + \frac{90.9}{16} = + 5.68$

* SEE APPENDIX 'A' FOR LOAD CALCS.

SIZE	CODE IDENT	DWG NO.
A	13499	649-2924-001
SCALE	REV	SHEET 117

MOMENT LOADING

$$M_R = \frac{2F}{18.56}\left[(18.56)^2+(16.50)^2+(13.82)^2+(11.15)^2+(7.15)^2 + (4.67)^2+(2.19)^2\right]$$

$$= 108.81\ F$$

$$F = \frac{2360}{108.81} = +21.69$$

SUMMATION

NODES 172, 179 FORCE X = +5.68

FORCE Z = +21.13 + 21.69 = +42.82

NODES 173, 180 FORCE X = +5.68

FORCE Z = $+21.13 + \left(\frac{16.50}{18.56}\right)(21.69) = +40.41$

NODES 174, 181 FORCE X = +5.68

FORCE Z = $+21.13 + \left(\frac{13.82}{18.56}\right)(21.69) = +37.28$

NODES 175, 182 FORCE X = +5.68

FORCE Z = $+21.13 + \left(\frac{11.15}{18.56}\right)(21.69) = +34.16$

NODES 176, 183 FORCE X = +5.68

FORCE Z = $+21.13 + \left(\frac{7.15}{18.56}\right)(21.69) = +29.49$

NODES 177, 184 FORCE X = +5.68

FORCE $Z = +21.13 + \left(\frac{4.67}{18.56}\right)(21.69) = +26.59$

NODES 186, 187 FORCE X = + 5.68

FORCE $Z = +21.13 + \left(\frac{2.19}{18.56}\right)(21.69) = +23.69$

NODES 178, 185 FORCE X = +5.68

FORCE $Z = -234.44 + \frac{338.0}{2}$

$= -65.44$

SIZE	CODE IDENT	DWG NO.
A	13499	649-2924-001
SCALE	REV	SHEET 119

6.0--MISC. ANALYSIS AND EXECUTION STATEMENTS

```
STIFFNESS ANALYSIS   REDUCE BAND ROOT
     UNITS   KIPS
     OUTPUT DECIMAL   3

LIST   FORCES,REACTIONS,STRESSES   ALL

FINISH
```

7.0 - RESULTS OF THE COMPUTER ANALYSIS

7.1 - STRESSES IN THE FINITE ELEMENTS

7.1.1 - UPPER HORIZ. SURFACE

MAX. SHEAR STRESS = 23.5-PSI IN EL. 25

MAX. DIRECT STRESS = 46.7-PSI IN EL. 24

MAX. BEND. MOMENT = 20.4 IN-LB/IN IN EL. 44

MAX. BENDING STRESS

$$S_B = \frac{6M}{t^2}$$

$$= \frac{(6)(20.4)}{(.190)^2} = 3,391 \cdot PSI$$

7.1.2 - VERTICAL SURFACE

MAX. SHEAR STRESS = 51.1-PSI IN EL. 127

MAX. DIRECT STRESS = 132.0-PSI IN EL. 128

MAX. BEND. MOMENT = 4.12 IN-LB/IN IN EL 134

= 3.12 IN-LB/IN IN EL 126

= 8.83 IN-LB/IN IN EL 156

MAX. BENDING STRESS $= \frac{(6)(4.12)}{(.375)^2} = 176$ -PSI

$= \frac{(6)(3.12)}{(.190)^2} = 519$ - PSI

$= \frac{(6)(8.83)}{(1.25)^2} = 34$ - PSI

7.1.3 - TRANSVERSE RIB

MAX. SHEAR STRESS = 5.5 - PSI IN EL 164

MAX. DIRECT STRESS = 10.8 - PSI IN EL. 157

MAX. BEND. MOMENT = 10.1 IN-LB/IN IN EL 169

MAX. BENDING STRESS $= \frac{(6)(10.1)}{(1.00)^2} = 61$ - PSI

7.1.4 - HOLD-DOWN BOSSES

MAX. SHEAR STRESS = 903.7 - PSI IN EL. 205

MAX. DIRECT STRESS = 857.0 - PSI IN EL. 211

7.1.5 - MARGINS - OF - SAFETY

AL CASTING ALLOY A 356-T6
PER QQ-A-601

A CASTING FACTOR OF 2.0 WILL BE USED

SIZE	CODE IDENT	DWG NO.
A	13499	649-2924-001
SCALE	REV	SHEET 122

FROM MIL-HDBK-5C, TABLE 3.13.5.0(b)

ASSUMING THE LOWEST CLASS CASTING

$F_{TY} = 22\text{-KSI}$

$F_{SU} = 22\text{-KSI}$

$$M.S.\ (\text{TENS. YLD}) = \frac{22{,}000}{(2.0)(3{,}391)} - 1.0 = +2.24$$

$$M.S.\ (\text{SHEAR ULT}) = \frac{22{,}000}{(2.0)(903.7)} - 1.0 = +11.2$$

SIZE	CODE IDENT	DWG NO.
A	13499	649-2924-001
SCALE	REV	SHEET 123

7.2 - ATTACHMENT BOLT LOADS

RESULTANT JOINT LOADS - SUPPORTS

JOINT		FORCES X FORCE	Y FORCE	Z FORCE
220	GLO	-.010	.000	-.007
221	GLO	-.009	-.000	-.007
239	GLO	-.011	.000	-.007
240	GLO	-.001	.000	-.038
241	GLO	-.002	.000	-.034
242	GLO	-.003	.000	-.028
243	GLO	-.003	.000	-.016
244	GLO	-.003	.000	-.028
245	GLO	-.003	.000	-.012
246	GLO	-.001	.000	-.022
247	GLO	-.001	.000	-.010
248	GLO	-.002	.000	-.015
249	GLO	-.002	.000	-.007
250	GLO	-.004	.000	.050
251	GLO	-.005	.000	.002
252	GLO	-.001	.000	-.037
253	GLO	-.002	.000	-.033
254	GLO	-.003	.000	-.028
255	GLO	-.003	.000	-.015
256	GLO	-.003	.000	-.028
257	GLO	-.003	.000	-.015
258	GLO	-.002	.000	-.021
259	GLO	-.002	.000	-.010
260	GLO	-.002	.000	-.016
261	GLO	-.002	.000	-.006
262	GLO	-.004	.000	.054
263	GLO	-.005	.000	-.003
	TOTALS	-.091	-.000	-.338

FROM THE ANALYTICAL MODEL IT CAN BE SEEN THAT TWO NODES AT EACH BOSS REPRESENT THE TIE-DOWN ARRANGEMENT.

MAX. TENSION = 38+34 = 72-LB

AN 3 BOLTS (10-32)

$$\left.\begin{aligned} P_S &= 2126\text{-LB} \\ P_T &= 2259\text{-LB} \end{aligned}\right\} \text{MIL-HDBK-5C, TABLES 8.1.5(a) \& (b)}$$

SINCE THE SHEAR IS INSIGNIFICANT, INTERACTION EQUATIONS WILL NOT BE USED.

$$M.S.(\text{TENS. ULT}) = \frac{2259}{72} - 1.0 = \underline{\underline{+30.4}}$$

SIZE	CODE IDENT	DWG NO.
A	13499	649-2924-001
SCALE	REV	SHEET 125

8.0 - FORCES INDUCED INTO THE AIRCRAFT

8.1 - ASSUMPTIONS

- DUE TO THE STIFFNESS OF THE ANTENNA BAYONET, IN COMPARISON TO THE BENDING STIFFNESS OF THE HONEYCOMB PANEL; THE BASE OF THE ANTENNA WILL TEND TO ROTATE AS A RIGID BODY.
- BECAUSE OF THE STIFFNESS OF THE TRANSVERSE A/C STIFFENER, IN COMPARISON TO THE HONEYCOMB PANEL STIFFNESS; THE ANTENNA WILL ROTATE ABOUT THE STIFFENER AND THE ATTACHMENTS TO THE STIFFENER WILL TAKE OUT ALMOST ALL OF THE LIFT FORCE.
- THE AERODYNAMIC FORCES FOR THE WORST-CASE SEA LEVEL FLIGHT WILL CREATE THE MORE SEVERE LOADING CONDITION.

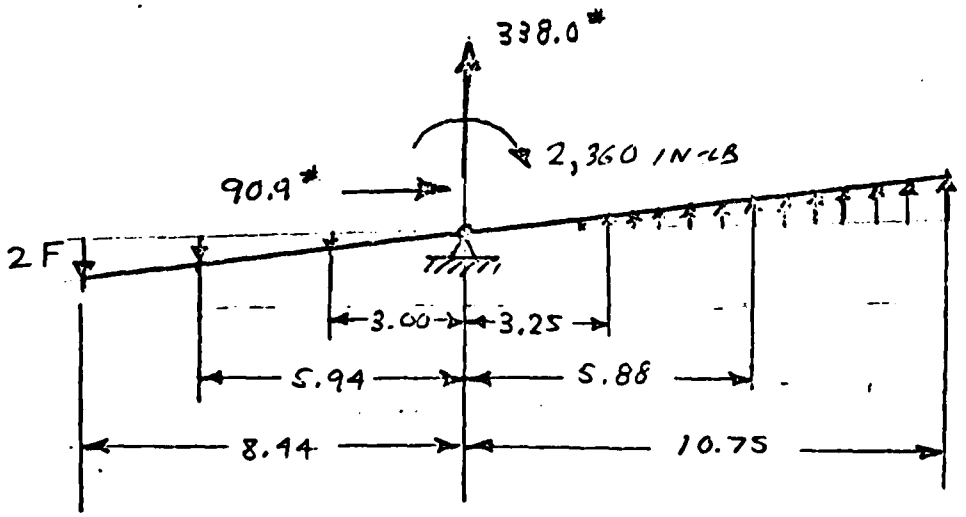

SIZE	CODE IDENT	DWG NO.
A	13499	649-2924-001
SCALE	REV	SHEET 126

8.2 - REACTION TO THE MOMENT

IN REALITY, THE AFT END OF THE ANTENNA LOADS THE PANEL IN COMPRESSION WITH SOME FORM OF DISTRIBUTED LOADING; PERHAPS TRIANGULAR IN NATURE. THE PROBLEM IS AN INDETERMINATE ONE WHOSE SOLUTION WILL REQUIRE A KNOWLEDGE OF ATTACHMENT BOLT AND PANEL SPRING RATES. TO SIMPLIFY THE SOLUTION, ASSUME EACH PORTION OF THE A/C PANEL ON EACH SIDE OF THE PIVOT LINE REACTS ONE-HALF OF THE MOMENT.

$$2\left[\frac{F}{8.44}\left(\overline{8.44}^2 + \overline{5.94}^2 + \overline{3.00}^2\right)\right] = \frac{1}{2}(2360)$$

$$F = 43.11\text{-LB} \quad \text{TENSION}$$

8.3 - REACTION TO THE FORCES

ASSUME ALL THE LIFT FORCES IS TAKEN IN THE ATTACHMENTS AT THE TRANSVERSE STIFFENER.

$$F = \frac{1}{3}(338.0) = 112.7\text{-LB} \quad \text{TENSION}$$

ASSUME ONLY ONE-HALF OF THE ATTACHMENTS TAKE OUT THE DRAG FORCE

$$F = \frac{1}{6}(90.9) = 15.2\text{-LB} \quad \text{SHEAR}$$

APPENDIX A

AERODYNAMIC LOADING CALCULATIONS

SIZE	CODE IDENT	DWG NO.
A	13499	649-2924-001
SCALE	REV	SHEET A-1

A.0 - AERODYNAMIC CALCULATIONS

A.1 - MAXIMUM DYNAMIC PRESSURE

REFERENCE: T.O. 1C-141A-1, ~~FIGURE 5-8.~~

- MAX. PERMISSIBLE VELOCITY ABOVE 23,000-FT. ALTITUDE IS $M = 0.85$
- MAX PERMISSIBLE VELOCITY BELOW 23,000-FT. ALTITUDE IS 380-KNOTS

A.1.1 - AT 23,000-FT ALTITUDE

$$C = 1025 - FT/SEC$$

$$\rho = .002378 \left(\frac{P}{P_0}\right)\left(\frac{T_0}{T}\right)$$

$$= (.002378)(.4046)\left(\frac{1}{.8419}\right) = .001143 \ LB\text{-}SEC^2/FT^4$$

$$v = (1025)(.85) = 871 \ FT/SEC$$

$$q_\infty = \frac{1}{2}\rho v^2$$

$$= \frac{1}{2}(.001143)(871)^2 = 434 - LB/FT^2$$

A.1.2 - AT SEA LEVEL

$$C = 1117 - FT/SEC$$

$$\rho = .002378 \ LB\text{-}SEC^2/FT^4$$

SIZE	CODE IDENT	DWG NO.
A	13499	649-2924-001
SCALE	REV	SHEET A-2

$$v = (380)(1.689)$$
$$= 642 \text{ FT/SEC} \qquad (M = .57)$$

$$q_\infty = \frac{1}{2}(.002378)(642)^2 = 490 - LB/FT^2$$

A.2 - DRAG & LIFT FORCES

ASSUMPTIONS:

- AS A WORST-CASE, ASSUME THAT THE ANGLE-OF-ATTACK ON THE ANTENNA IS 10°.
- THE SAUCER PORTION OF THE ANTENNA WILL BE TREATED AS A FLAT DISC; RATHER THAN AS AN AIRFOIL.
- THE ENTIRE ANTENNA IS OUTSIDE THE BOUNDARY LAYER. (CONSERVATIVE)

A.2.1 — SAUCER

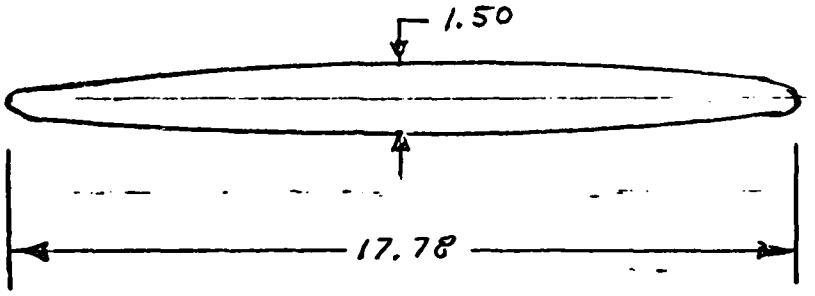

$$\text{AREA} = \frac{\pi}{4}\left(\frac{17.78}{12}\right)^2 = 1.724 - FT^2$$

SIZE	CODE IDENT	DWG NO.
A	13499	649-2924-001
SCALE	REV	SHEET A-3

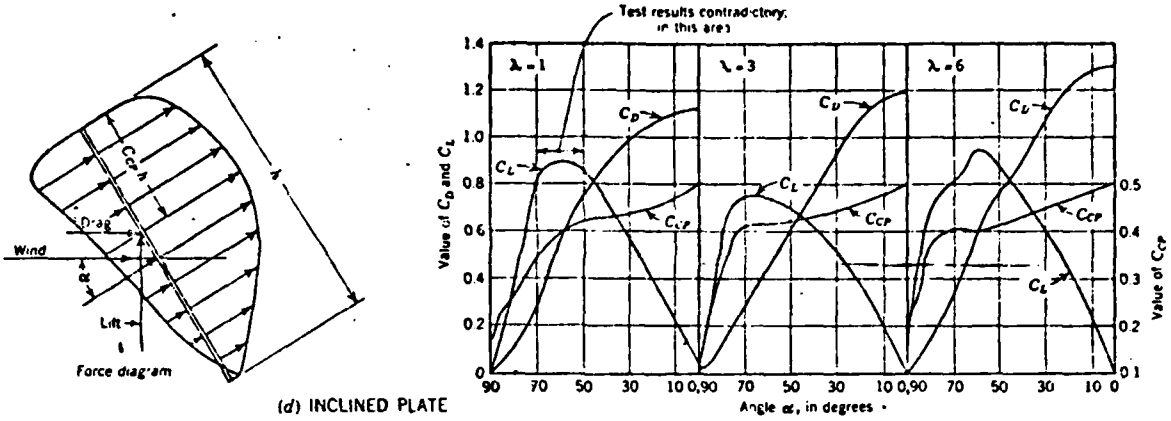

FIG. 5.—WIND PRESSURES ON ELEMENTARY BODIES

(FROM ASCE PAPER 3269)

FOR $\lambda = 1$ (A SQUARE PLATE) THE DRAG COEFFICIENT IS ALMOST THE SAME AS FOR A CIRCULAR PLATE OF THE SAME AREA.

FROM THE CURVES ABOVE (FOR $\lambda = 1$), AT $\alpha = 80°$:

$C_D = .10$

$C_L = .40$

$C_{CP} = .26$

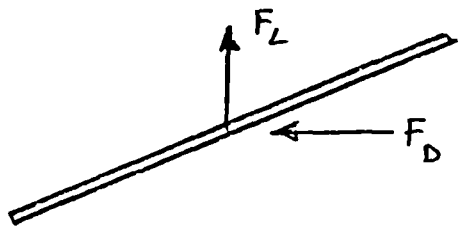

(a) <u>AT 23,000-FT ALTITUDE</u>

$$F_D = C_D A q_\infty$$
$$= (.10)(1.724)(434) = 74.8 \text{-LB.}$$

$$F_L = C_L A q_\infty$$
$$= (.40)(1.724)(434) = 299.3 \text{-LB.}$$

SIZE	CODE IDENT	DWG NO.
A	13499	649-2924-001
SCALE	REV	SHEET A-4

$\bar{X} = C_{CP} D = (.26)(17.78) = 4.62$-IN. FROM TOP OF DISC

(b) AT SEA LEVEL

$F_D = (.10)(1.724)(490) = 84.5$-LB.

$F_L = (.40)(1.724)(490) = 338.0$-LB.

A.2.2 – BAYONET

REFERENCE: DORNE & MARGOLIN ENGR. REPORT NO. 7051.15, "DM C34-3 ANTENNA AERODYNAMIC ANALYSIS".

$A_{REF} = 1.237$-FT^2.

(a) AT 23,000-FT ALTITUDE

$C_D = .06683$

$F_D = (.06683)(1.237)(434) = 35.9$-LB

(b) AT SEA LEVEL

$C_D \approx \frac{1}{2}(.00983 + .01133) = .01058$

$F_D = (.01058)(1.237)(490) = 6.7$-LB.

SIZE	CODE IDENT	DWG NO.
A	13499	649-2924-001
SCALE	REV	SHEET A-5

A.2.3 — TOTAL ANTENNA

REFERENCE: DORNE & MARGOLIN DRAWING 261D1195, "DM C34-3/B UHF ANTENNA".

$\bar{Y}_{SAUCER} \approx 10.48$-IN.

$\bar{Y}_{BAYONET} \approx 4.86$-IN.

AT 23,000-FT ALTITUDE

$F_D = 74.8 + 35.9 = 110.7$-LB

$F_L = 299.3$-LB

$M = (74.8)(10.48) + (35.9)(4.86) + (299.3)(4.27)$

$= 2,236$ IN-LB.

AT SEA LEVEL

$F_D = 84.5 + 6.4 = 90.9$-LB.

$F_L = 338.0$-LB

$M = (84.5)(10.48) + (6.4)(4.86) + (338.0)(4.27)$

$= 2,360$ IN-LB.

SIZE	CODE IDENT	DWG NO.
A	13499	649-2924-001
SCALE	REV	SHEET A-6

APPENDIX B

LISTING OF COMPUTER RESULTS

SIZE	CODE IDENT	DWG NO.
A	13499	649-2924-001
SCALE	REV	SHEET B-1

```
*****************************
*RESULTS OF LATEST ANALYSIS*
*****************************

PROBLEM - C141-8        TITLE - DM C34-3/8 UHF ANTENNA MOD

ACTIVE UNITS  INCH   KIPS   DEGREE DEGF   SECOND

ACTIVE STRUCTURE TYPE  SPACE FRAME

ACTIVE COORDINATE AXES  X Y Z

LOADING - DRAG

ELEMENT STRESSES

ELEMENT
1          CENTROID    SXX      .648678-03   SYY     -.111959-02   SXY     -.410452-02
                       VXX      .355519-02   VYY     -.279333-02
           NODE 101          MXX     -.251269-02   MYY     -.247899-02   MXY     -.160205-05
           NODE 172          MXX      .302916-02   MYY      .320826-02   MXY     -.342279-03
           NODE 164          MXX      .157431-02   MYY     -.799224-03   MXY     -.171990-03

2          CENTROID    SXX      .100470-01   SYY     -.137625-02   SXY     -.278003-02
                       VXX      .238523-01   VYY      .450716-03
           NODE 172          MXX      .109900-01   MYY      .114809-01   MXY     -.107311-02
           NODE 101          MXX      .112955-02   MYY      .117670-02   MXY     -.331267-04
           NODE 102          MXX     -.669240-02   MYY     -.361193-02   MXY     -.951904-03

3          CENTROID    SXX      .858124-02   SYY     -.581796-02   SXY     -.992172-02
                       VXX      .209484-01   VYY     -.140134-02
           NODE 102          MXX     -.816435-02   MYY     -.786159-02   MXY     -.107311-02
           NODE 103          MXX     -.626324-03   MYY     -.683279-03   MXY     -.283340-03
           NODE 172          MXX      .795865-02   MYY      .356481-02   MXY     -.678226-03

4          CENTROID    SXX     -.164612-01   SYY     -.140820-01   SXY     -.284481-02
                       VXX     -.194838-01   VYY      .145292-01
           NODE 172          MXX      .917520-02   MYY      .586354-02   MXY     -.283340-03
           NODE 103          MXX      .193635-02   MYY      .102488-02   MXY     -.283340-03
           NODE 140          MXX     -.317827-02   MYY     -.180932-02   MXY      .197313-02

5          CENTROID    SXX     -.525953-02   SYY     -.113895-01   SXY     -.278564-02
                       VXX      .911466-02   VYY     -.607861-02
           NODE 104          MXX      .141519-02   MYY      .126502-02   MXY     -.416552-03
           NODE 173          MXX      .728653-02   MYY      .739780-02   MXY     -.477968-03
```

```
      NODE 141          MXX     -.282143-02   MYY     -.145344-02   MXY      .116711-02

6       CENTROID   SXX     -.333394-02   SYY      .462546-02   SXY      .158166-02
                   VXX     -.607564-03   VYY      .112334-01
      NODE 104          MXX     -.199912-02   MYY     -.226179-02   MXY     -.390123-03
      NODE 105          MXX     -.494696-02   MYY     -.513355-02   MXY     -.329399-03
      NODE 173          MXX      .422362-02   MYY      .573291-02   MXY     -.537299-03

7       CENTROID   SXX     -.270738-02   SYY      .483223-02   SXY      .208409-01
                   VXX      .898434-02   VYY      .777008-02
      NODE 106          MXX      .302173-02   MYY      .286862-02   MXY      .115087-03
      NODE 173          MXX      .618560-02   MYY      .622729-02   MXY     -.329399-03
      NODE 105          MXX     -.391769-02   MYY     -.516126-02   MXY     -.107156-03

8       CENTROID   SXX     -.235114-01   SYY     -.218898-01   SXY      .793759-02
                   VXX     -.142867-01   VYY     -.114722-02
      NODE 173          MXX      .791766-02   MYY      .788307-02   MXY     -.155336-03
      NODE 106          MXX      .232170-02   MYY      .196495-02   MXY      .579755-03
      NODE 142          MXX     -.363727-02   MYY     -.168531-02   MXY      .212210-03

9       CENTROID   SXX      .140964-02   SYY     -.915159-02   SXY      .113456-01
                   VXX      .115734-01   VYY     -.469555-02
      NODE 107          MXX      .364235-02   MYY      .234410-02   MXY      .288135-03
      NODE 174          MXX      .930385-02   MYY      .805237-02   MXY      .922025-04
      NODE 143          MXX     -.546468-02   MYY     -.367841-02   MXY      .190169-03

10      CENTROID   SXX     -.937787-02   SYY     -.106086-01   SXY      .150084-01
                   VXX     -.379003-03   VYY      .530170-02
      NODE 107          MXX     -.137456-02   MYY     -.258874-02   MXY     -.641007-04
      NODE 108          MXX     -.114905-02   MYY     -.250396-02   MXY     -.641007-04
      NODE 174          MXX      .487425-02   MYY      .358913-02   MXY     -.603789-04

11      CENTROID   SXX     -.112607-01   SYY     -.242689-01   SXY      .108843-01
                   VXX     -.143156-01   VYY     -.789418-03
      NODE 174          MXX      .930523-02   MYY      .795636-02   MXY     -.150178-03
      NODE 108          MXX      .233315-02   MYY      .994012-03   MXY     -.288884-03
      NODE 144          MXX     -.446895-02   MYY     -.216436-02   MXY     -.219531-03

12      CENTROID   SXX      .168672-01   SYY     -.115410-01   SXY      .961422-02
                   VXX      .165569-01   VYY     -.644832-02
      NODE 109          MXX      .445215-02   MYY      .396172-02   MXY      .341465-03
      NODE 175          MXX      .961395-02   MYY      .914066-02   MXY      .527756-03
      NODE 145          MXX     -.707404-02   MYY     -.513767-02   MXY      .434610-03

13      CENTROID   SXX      .143574-01   SYY     -.934165-03   SXY      .726370-02
                   VXX      .177541-04   VYY      .605681-02
      NODE 109          MXX     -.143867-02   MYY     -.195021-02   MXY      .117269-03
      NODE 110          MXX     -.469462-02   MYY     -.495359-02   MXY      .117269-03
      NODE 175          MXX      .517242-02   MYY      .435524-02   MXY     -.333365-03
```

14	CENTROID	SXX	.769637-02	SYY	.121765-02	SXY	.171112-02	
		VXX	.834417-03	VYY	-.403355-02			
	NODE 175	MXX	.704727-02	MYY	.642360-02	MXY	-.828116-04	
	NODE 110	MXX	.101614-02	MYY	.609499-03	MXY	.362530-04	
	NODE 120	MXX	-.470229-02	MYY	-.239497-02	MXY	-.232732-04	
15	CENTROID	SXX	.246837-01	SYY	.682346-02	SXY	.418504-02	
		VXX	-.113198-02	VYY	-.360759-02			
	NODE 110	MXX	.168395-02	MYY	.829877-03	MXY	.362540-04	
	NODE 176	MXX	.544990-02	MYY	.486780-02	MXY	-.106529-03	
	NODE 120	MXX	-.352778-02	MYY	-.208304-02	MXY	-.351356-04	
16	CENTROID	SXX	.103844-01	SYY	-.607199-02	SXY	.145128-01	
		VXX	-.811628-03	VYY	.377826-02			
	NODE 110	MXX	-.318496-02	MYY	-.345768-02	MXY	-.279452-03	
	NODE 111	MXX	-.903856-03	MYY	-.119202-02	MXY	-.279452-03	
	NODE 176	MXX	.569111-02	MYY	.291726-02	MXY	.932804-04	
17	CENTROID	SXX	.109996-01	SYY	-.246732-01	SXY	.561047-02	
		VXX	-.198637-01	VYY	.114314-02			
	NODE 176	MXX	.770498-02	MYY	.760984-02	MXY	-.521817-03	
	NODE 111	MXX	.235456-02	MYY	.201726-02	MXY	-.217754-03	
	NODE 146	MXX	-.466098-02	MYY	-.244816-02	MXY	-.369785-03	
18	CENTROID	SXX	.247644-01	SYY	-.656585-02	SXY	.210069-02	
		VXX	.946916-02	VYY	-.993032-03			
	NODE 112	MXX	.157100-02	MYY	.830589-03	MXY	.525041-04	
	NODE 177	MXX	.638760-02	MYY	.565519-02	MXY	-.123646-03	
	NODE 147	MXX	-.350504-02	MYY	-.163684-02	MXY	-.355710-04	
19	CENTROID	SXX	.632824-02	SYY	-.654047-02	SXY	.694901-02	
		VXX	.347680-03	VYY	.296656-02			
	NODE 112	MXX	-.840256-03	MYY	-.156716-02	MXY	-.244674-03	
	NODE 113	MXX	.141592-03	MYY	-.734224-03	MXY	-.244684-03	
	NODE 177	MXX	.317470-02	MYY	.233550-02	MXY	-.404469-04	
20	CENTROID	SXX	.101372-01	SYY	-.169947-01	SXY	.409399-02	
		VXX	-.121863-01	VYY	-.257385-03			
	NODE 177	MXX	.658010-02	MYY	.571557-02	MXY	-.279420-03	
	NODE 113	MXX	.210275-02	MYY	.129645-02	MXY	-.458502-03	
	NODE 148	MXX	-.218231-02	MYY	-.159545-02	MXY	-.368961-03	
21	CENTROID	SXX	.119345-01	SYY	-.112894-01	SXY	-.603702-02	
		VXX	.989752-02	VYY	.382255-02			
	NODE 114	MXX	-.800674-03	MYY	-.760636-03	MXY	.265699-03	
	NODE 186	MXX	.561815-02	MYY	.567299-02	MXY	.150318-03	
	NODE 149	MXX	-.159286-02	MYY	.142152-02	MXY	.208014-03	

```
22          CENTROID    SXX     -.104707-01   SYY     -.487637-02   SXY     -.429826-02
                        VXX      .142616-02   VYY      .501604-02
            NODE 114            MXX     -.217375-02   MYY     -.202625-02   MXY      .436289-03
            NODE 115            MXX     -.256461-02   MYY     -.253707-02   MXY      .436289-03
            NODE 186            MXX      .373144-02   MYY      .371474-02   MXY      .351043-03

165         CENTROID    SXX      .246665-02   SYY      .590285-02   SXY      .555078-02
                        VXX      .834529-02   VYY     -.180086-01
            NODE 186            MXX      .571656-02   MYY      .446405-02   MXY     -.167512-03
            NODE 115            MXX      .918401-02   MYY      .654870-02   MXY     -.819756-03
            NODE 178            MXX     -.636327-02   MYY     -.875512-02   MXY     -.493649-03

23          CENTROID    SXX     -.318291-01   SYY     -.541475-02   SXY     -.219263-01
                        VXX      .638883-02   VYY     -.938485-02
            NODE 115            MXX      .479914-02   MYY      .510169-02   MXY     -.819786-03
            NODE 116            MXX      .311575-02   MYY      .275307-02   MXY     -.215048-04
            NODE 178            MXX     -.599378-02   MYY     -.871977-02   MXY     -.111178-02

24          CENTROID    SXX     -.202608-01   SYY      .466680-01   SXY     -.172568-01
                        VXX      .108226-01   VYY      .308518-01
            NODE 116            MXX      .272839-02   MYY      .202323-02   MXY     -.244835-03
            NODE 150            MXX      .915507-02   MYY      .948321-02   MXY     -.112732-02
            NODE 178            MXX     -.519282-02   MYY     -.661181-02   MXY     -.227910-02

25          CENTROID    SXX     -.219299-01   SYY     -.581385-01   SXY      .234945-01
                        VXX      .252263-02   VYY     -.163265-02
            NODE 118            MXX     -.142673-02   MYY     -.132809-02   MXY      .346434-03
            NODE 151            MXX     -.233264-02   MYY     -.172418-02   MXY      .208430-03
            NODE 117            MXX      .383629-03   MYY      .744553-03   MXY      .253310-03

26          CENTROID    SXX      .103718-01   SYY      .832647-02   SXY      .279352-02
                        VXX     -.785367-04   VYY     -.247116-05
            NODE 119            MXX     -.680783-03   MYY     -.224213-03   MXY      .995472-04
            NODE 151            MXX     -.282165-03   MYY      .153006-03   MXY      .255331-03
            NODE 118            MXX     -.550945-03   MYY     -.813357-04   MXY      .177010-03

27          CENTROID    SXX      .126325-01   SYY      .763570-02   SXY     -.333177-02
                        VXX      .176103-03   VYY      .276330-05
            NODE 163            MXX     -.635469-03   MYY     -.126250-03   MXY     -.279011-03
            NODE 119            MXX     -.776016-03   MYY     -.246226-03   MXY     -.129188-03
            NODE 138            MXX     -.545494-03   MYY     -.771868-04   MXY     -.205091-03

28          CENTROID    SXX     -.102295-01   SYY     -.456138-01   SXY     -.155343-01
                        VXX      .116038-02   VYY      .865269-03
            NODE 163            MXX     -.138876-02   MYY     -.140365-02   MXY     -.420893-03
            NODE 138            MXX     -.760379-03   MYY     -.677501-03   MXY     -.394425-03
            NODE 137            MXX     -.468109-03   MYY     -.357241-03   MXY     -.156013-03
```

```
29          CENTROID    SXX     -.220058-01   SYY      .421730-01   SXY      .117537-01
                        VXX      .131622-01   VYY     -.398200-01
            NODE 162            MXX      .909866-02   MYY      .108665-01   MXY     -.196327-03
            NODE 136            MXX      .294115-02   MYY      .392659-02   MXY     -.864593-03
            NODE 185            MXX     -.905825-02   MYY     -.893666-02   MXY      .109473-02

30          CENTROID    SXX     -.666525-02   SYY      .312867-01   SXY      .262591-03
                        VXX      .668361-02   VYY      .173393-01
            NODE 136            MXX      .161146-02   MYY      .179812-02   MXY     -.213366-03
            NODE 135            MXX      .477499-02   MYY      .388178-02   MXY     -.378814-03
            NODE 185            MXX     -.952226-02   MYY     -.984743-02   MXY     -.119420-03

31          CENTROID    SXX      .152266-01   SYY     -.398758-02   SXY      .619522-02
                        VXX      .209155-02   VYY     -.271303-02
            NODE 134            MXX     -.303195-03   MYY     -.704123-03   MXY      .477624-04
            NODE 187            MXX      .307215-02   MYY      .263525-02   MXY      .158432-03
            NODE 135            MXX      .254744-02   MYY     -.593137-04   MXY     -.138754-03

32          CENTROID    SXX      .152799-01   SYY     -.853882-02   SXY      .467318-02
                        VXX      .852165-02   VYY     -.192722-02
            NODE 187            MXX      .520579-02   MYY      .478166-02   MXY      .119138-03
            NODE 134            MXX      .603110-03   MYY      .197144-03   MXY      .632584-04
            NODE 161            MXX     -.134186-02   MYY      .613775-03   MXY      .911980-04

166         CENTROID    SXX     -.153890-02   SYY     -.107649-01   SXY      .953072-02
                        VXX      .199501-01   VYY     -.170399-02
            NODE 187            MXX      .274262-03   MYY      .159487-02   MXY      .561481-03
            NODE 185            MXX     -.806244-02   MYY     -.720308-02   MXY      .561481-03
            NODE 135            MXX      .625347-02   MYY      .172237-02   MXY     -.124166-02

33          CENTROID    SXX      .897574-02   SYY     -.193703-01   SXY     -.541696-0
                        VXX     -.120883-01   VYY      .100633-02
            NODE 133            MXX      .229739-02   MYY      .146255-02   MXY      .335688-03
            NODE 184            MXX      .650983-02   MYY      .566631-02   MXY      .309018-03
            NODE 160            MXX     -.337796-02   MYY     -.207025-02   MXY      .322153-03

34          CENTROID    SXX      .334154-02   SYY     -.774595-02   SXY     -.834825-02
                        VXX      .179585-03   VYY     -.306657-02
            NODE 133            MXX     -.215007-03   MYY     -.109026-02   MXY      .211397-03
            NODE 132            MXX     -.100831-02   MYY     -.173550-02   MXY      .211397-03
            NODE 184            MXX      .300556-02   MYY      .217583-02   MXY      .575156-04

35          CENTROID    SXX      .232049-01   SYY     -.689478-02   SXY     -.291326-0
                        VXX      .936950-02   VYY      .193771-02
            NODE 184            MXX      .632085-02   MYY      .558904-02   MXY      .109030-03
            NODE 132            MXX      .193187-02   MYY      .119582-02   MXY      .165082-04
            NODE 159            MXX     -.369606-02   MYY     -.212483-02   MXY      .630193-04

36          CENTROID    SXX      .633967-02   SYY     -.209454-01   SXY     -.517603-0
```

```
                    VXX     -.177224-01   VYY     -.910058-03
        NODE 131          MXX      .169267-02   MYY      .157170-02   MXY     -.326687-03
        NODE 183          MXX      .715917-02   MYY      .761560-02   MXY      .398313-03
        NODE 158          MXX     -.427156-02   MYY     -.198496-02   MXY      .358130-04

37        CENTROID    SXX      .388653-02   SYY     -.524347-02   SXY     -.124827-01
                    VXX     -.215287-02   VYY     -.500619-02
        NODE 131          MXX     -.319571-02   MYY     -.286029-02   MXY      .246362-03
        NODE 130          MXX     -.299421-02   MYY     -.339046-02   MXY      .246362-03
        NODE 183          MXX      .324273-02   MYY      .301112-02   MXY      .973932-04

38        CENTROID    SXX      .179696-01   SYY      .492834-02   SXY     -.208355-02
                    VXX     -.104376-02   VYY      .333012-02
        NODE 183          MXX      .499638-02   MYY      .434043-02   MXY      .110015-03
        NODE 130          MXX      .156961-02   MYY      .624887-03   MXY     -.415893-04
        NODE 139          MXX     -.328874-02   MYY     -.208071-02   MXY      .342128-04

39        CENTROID    SXX      .476833-02   SYY      .571926-03   SXY     -.415340-02
                    VXX      .821628-03   VYY      .449025-02
        NODE 130          MXX      .300057-03   MYY      .205935-03   MXY     -.415892-04
        NODE 182          MXX      .898235-02   MYY      .823876-02   MXY      .314723-03
        NODE 139          MXX     -.620423-02   MYY     -.289498-02   MXY      .136567-03

40        CENTROID    SXX      .913665-02   SYY     -.929060-02   SXY     -.688523-02
                    VXX      .278492-02   VYY      .253289-02
        NODE 157          MXX      .511230-03   MYY     -.488713-03   MXY      .350111-04
        NODE 130          MXX     -.199255-02   MYY     -.264925-02   MXY     -.830365-04
        NODE 129          MXX      .308309-02   MYY      .128823-02   MXY     -.240127-04

41        CENTROID    SXX      .201571-01   SYY     -.565385-02   SXY     -.107814-01
                    VXX      .192194-01   VYY      .756584-03
        NODE 182          MXX      .112327-01   MYY      .116819-01   MXY     -.836753-03
        NODE 129          MXX     -.107307-03   MYY      .259785-03   MXY      .350112-04
        NODE 157          MXX     -.793802-02   MYY     -.266930-02   MXY     -.400871-03

42        CENTROID    SXX     -.126259-01   SYY     -.244331-01   SXY     -.104845-01
                    VXX     -.153752-01   VYY      .100960-02
        NODE 128          MXX      .201757-02   MYY      .116459-02   MXY      .483090-03
        NODE 181          MXX      .831946-02   MYY      .741683-02   MXY     -.224185-03
        NODE 156          MXX     -.595039-02   MYY     -.295836-02   MXY      .129452-03

43        CENTROID    SXX     -.106100-01   SYY     -.756284-02   SXY     -.155051-01
                    VXX      .327151-02   VYY     -.620333-02
        NODE 128          MXX     -.237623-03   MYY     -.181584-02   MXY      .123631-03
        NODE 127          MXX     -.242427-02   MYY     -.522972-02   MXY      .123631-03
        NODE 181          MXX      .590693-02   MYY      .390283-02   MXY     -.927042-03

44        CENTROID    SXX      .161612-02   SYY     -.821426-02   SXY     -.118006-01
                    VXX      .269975-01   VYY      .480597-02
```

	NODE 161	MXX	.203952-01	MYY	.176207-01	MXY	.253[illegible]45-03
	NODE 127	MXX	.591706-02	MYY	.282482-02	MXY	-.107[illegible]96-02
	NODE 155	MXX	-.118700-01	MYY	-.608937-02	MXY	-.412[illegible]60-03
45	CENTROID	SXX	-.237668-01	SYY	-.218755-01	SXY	-.733611-0[illegible]
		VXX	-.140936-01	VYY	.490057-03		
	NODE 126	MXX	.202358-02	MYY	.165455-02	MXY	-.534320-03
	NODE 180	MXX	.786572-02	MYY	.776165-02	MXY	.115440-03
	NODE 154	MXX	-.341962-02	MYY	-.131639-02	MXY	-.209440-03
46	CENTROID	SXX	-.187856-02	SYY	.531872-02	SXY	-.205737-01
		VXX	.955685-02	VYY	-.791881-02		
	NODE 180	MXX	.639442-02	MYY	.639397-02	MXY	.351875-03
	NODE 126	MXX	.331905-02	MYY	.312165-02	MXY	-.975116-04
	NODE 125	MXX	-.405948-02	MYY	-.529720-02	MXY	.127182-03
47	CENTROID	SXX	-.349665-02	SYY	.478475-02	SXY	-.118042-02
		VXX	-.665629-03	VYY	-.114664-01		
	NODE 125	MXX	-.501477-02	MYY	-.524103-02	MXY	.351875-03
	NODE 124	MXX	-.201188-02	MYY	-.227648-02	MXY	.382474-03
	NODE 180	MXX	.425941-02	MYY	.583812-02	MXY	.553982-03
48	CENTROID	SXX	-.557834-02	SYY	-.111497-01	SXY	.289033-02
		VXX	.914688-02	VYY	.600350-02		
	NODE 160	MXX	.726088-02	MYY	.741222-02	MXY	.480186-03
	NODE 124	MXX	.137836-02	MYY	.124808-02	MXY	.414026-03
	NODE 153	MXX	-.279986-02	MYY	-.139230-02	MXY	-.117841-02
49	CENTROID	SXX	-.164781-01	SYY	-.142382-01	SXY	.294332-02
		VXX	-.194988-01	VYY	-.145472-01		
	NODE 123	MXX	.194960-02	MYY	.104816-02	MXY	.280579-03
	NODE 179	MXX	.918287-02	MYY	.588138-02	MXY	.280579-03
	NODE 152	MXX	-.318069-02	MYY	-.180419-02	MXY	-.197431-02
50	CENTROID	SXX	.869958-02	SYY	-.592957-02	SXY	.125810-02
		VXX	.209481-01	VYY	.141160-02		
	NODE 123	MXX	-.609790-03	MYY	-.660453-03	MXY	.280578-03
	NODE 122	MXX	-.815987-02	MYY	-.785188-02	MXY	.106802-02
	NODE 179	MXX	.796418-02	MYY	.557214-02	MXY	.674302-03
51	CENTROID	SXX	.101770-01	SYY	-.145259-02	SXY	.320316-02
		VXX	.268526-01	VYY	-.445149-03		
	NODE 101	MXX	.112793-02	MYY	.117321-02	MXY	.296669-04
	NODE 179	MXX	.109915-01	MYY	.114799-01	MXY	.106802-02
	NODE 122	MXX	-.688867-02	MYY	-.360812-02	MXY	.947920-03
52	CENTROID	SXX	.692345-03	SYY	-.987261-03	SXY	.446470-02
		VXX	.355583-02	VYY	.278806-02		
	NODE 179	MXX	.302482-02	MYY	.520259-02	MXY	.340[illegible]5-03

```
      NODE 101          MXX     -.251355-02   MYY     -.248161-02   MXY     -.160212-05
      NODE 164          MXX      .157566-02   MYY     -.796750-03   MXY      .169207-03

53    CENTROID    SXX     -.955[illegible]-02   SYY     -.448709-02   SXY     -.426209-02
                  VXX     -.157194-02   VYY     -.285485-02
      NODE 172          MXX      .201946-02   MYY      .287506-02   MXY     -.342379-03
      NODE 165          MXX     -.148276-02   MYY     -.950084-03   MXY      .240672-05
      NODE 164          MXX      .954211-03   MYY     -.577987-03   MXY     -.169906-03

54    CENTROID    SXX     -.133572-01   SYY      .451977-04   SXY     -.251416-02
                  VXX     -.296666-01   VYY      .115120-01
      NODE 165          MXX      .138408-02   MYY      .221814-02   MXY     -.319307-03
      NODE 172          MXX      .115784-01   MYY      .111707-01   MXY      .100641-02
      NODE 140          MXX     -.430951-02   MYY     -.369597-02   MXY      .130660-02

55    CENTROID    SXX     -.335073-01   SYY     -.217508-01   SXY      .802709-02
                  VXX      .336831-03   VYY     -.207952-02
      NODE 141          MXX     -.118636-02   MYY     -.966662-04   MXY      .719146-03
      NODE 165          MXX     -.411299-03   MYY      .350427-03   MXY      .602562-03
      NODE 140          MXX     -.287542-02   MYY     -.206796-02   MXY      .331126-03

56    CENTROID    SXX     -.111646-01   SYY     -.536605-02   SXY     -.461737-02
                  VXX      .118628-01   VYY     -.929418-02
      NODE 173          MXX      .813728-02   MYY      .854927-02   MXY      .341370-05
      NODE 165          MXX      .209611-02   MYY      .116237-02   MXY      .341370-05
      NODE 141          MXX     -.335096-02   MYY     -.239935-02   MXY      .705885-03

57    CENTROID    SXX     -.189012-01   SYY     -.791912-02   SXY      .186976-02
                  VXX     -.163926-01   VYY      .127139-01
      NODE 142          MXX     -.415120-02   MYY     -.443454-02   MXY     -.155336-03
      NODE 165          MXX      .302431-03   MYY     -.535103-03   MXY      .341368-05
      NODE 173          MXX      .642314-02   MYY      .343939-02   MXY     -.759612-04

58    CENTROID    SXX     -.277925-01   SYY     -.118475-01   SXY     -.294576-03
                  VXX     -.379044-02   VYY      .242643-03
      NODE 143          MXX     -.456472-02   MYY     -.394550-02   MXY      .144446-04
      NODE 165          MXX     -.262601-02   MYY     -.148688-02   MXY     -.562807-03
      NODE 142          MXX     -.561747-03   MYY     -.102230-04   MXY     -.220302-03

59    CENTROID    SXX     -.126376-01   SYY     -.479832-02   SXY      .401400-02
                  VXX      .336612-03   VYY     -.108736-04
      NODE 165          MXX     -.534127-03   MYY      .503593-04   MXY      .196998-04
      NODE 143          MXX     -.406643-03   MYY     -.103703-03   MXY      .365605-03
      NODE 166          MXX      .532995-03   MYY      .476343-03   MXY      .993360-04

60    CENTROID    SXX      .419058-02   SYY     -.724546-03   SXY      .333765-02
                  VXX      .156381-01   VYY      .756277-02
      NODE 166          MXX      .432696-03   MYY     -.229185-03   MXY     -.518767-04
      NODE 143          MXX     -.672555-02   MYY     -.705445-02   MXY      .922024-04
```

```
      NODE 174          MXX     .777973-02   MYY     .354200-02   MXY     .201627-04

61      CENTROID   SXX    -.442977-02   SYY    -.356926-02   SXY    -.244110-02
                   VXX    -.175418-01   VYY     .104400-01
      NODE 144          MXX    -.604648-02   MYY    -.667490-02   MXY    -.150178-03
      NODE 166          MXX     .795262-03   MYY    -.109538-03   MXY    -.518767-04
      NODE 174          MXX     .781404-02   MYY     .350086-02   MXY    -.101027-03

62      CENTROID   SXX    -.838683-02   SYY    -.966386-03   SXY     .158137-02
                   VXX    -.167340-03   VYY    -.813299-04
      NODE 144          MXX    -.132504-03   MYY     .117323-03   MXY    -.462548-03
      NODE 167          MXX     .269426-04   MYY     .598012-03   MXY    -.292219-04
      NODE 166          MXX     .373803-03   MYY     .391036-03   MXY    -.184102-03

63      CENTROID   SXX    -.194614-01   SYY     .219770-02   SXY     .106741-02
                   VXX    -.661163-02   VYY    -.100791-02
      NODE 167          MXX    -.300388-02   MYY    -.169807-02   MXY     .961875-03
      NODE 144          MXX    -.579854-03   MYY    -.116074-04   MXY    -.330297-04
      NODE 145          MXX    -.545325-02   MYY    -.316957-02   MXY     .735661-03

64      CENTROID   SXX     .235012-01   SYY     .856208-02   SXY     .552681-02
                   VXX     .202071-01   VYY     .124355-01
      NODE 167          MXX    -.726640-03   MYY    -.117762-02   MXY     .346124-03
      NODE 145          MXX    -.781825-02   MYY    -.775102-02   MXY     .527755-03
      NODE 175          MXX     .434392-02   MYY     .389368-02   MXY     .436947-03

65      CENTROID   SXX     .848478-02   SYY     .360666-02   SXY     .174295-02
                   VXX    -.559085-02   VYY     .841543-04
      NODE 120          MXX    -.551317-02   MYY    -.539549-02   MXY    -.828105-04
      NODE 167          MXX    -.120024-02   MYY    -.133391-02   MXY     .346124-03
      NODE 175          MXX     .577253-02   MYY     .320820-02   MXY     .131657-03

66      CENTROID   SXX    -.522907-02   SYY    -.343722-02   SXY    -.272818-02
                   VXX    -.102725-02   VYY     .472953-04
      NODE 167          MXX     .122796-02   MYY     .126752-02   MXY     .505051-04
      NODE 120          MXX     .284224-03   MYY     .344545-03   MXY     .150742-04
      NODE 121          MXX    -.879097-03   MYY    -.322048-03   MXY     .327896-04

67      CENTROID   SXX     .275708-01   SYY     .738675-02   SXY    -.516245-03
                   VXX     .159609-02   VYY     .991019-04
      NODE 120          MXX    -.155172-03   MYY     .199544-03   MXY     .150742-04
      NODE 168          MXX     .151837-02   MYY     .185008-02   MXY    -.288590-04
      NODE 121          MXX    -.188692-02   MYY    -.661024-03   MXY    -.689238-05

68      CENTROID   SXX     .233793-01   SYY     .287059-02   SXY     .179348-02
                   VXX     .426125-02   VYY     .131617-03
      NODE 168          MXX    -.644147-03   MYY    -.527268-03   MXY    -.439071-03
      NODE 120          MXX    -.442670-02   MYY    -.413567-02   MXY    -.106529-03
      NODE 176          MXX     .449606-02   MYY     .249463-02   MXY    -.272800-03
```

```
69          CENTROID    SXX      .196870-01   SYY      .165216-02   SXY     -.731330-02
                        VXX     -.214393-01   VYY      .195834-01
            NODE 146          MXX     -.556230-02   MYY     -.539497-02   MXY     -.521816-03
            NODE 168          MXX      .101876-03   MYY     -.281081-03   MXY     -.439071-03
            NODE 176          MXX      .617370-02   MYY      .300703-02   MXY     -.480444-03

70          CENTROID    SXX     -.137239-02   SYY     -.284101-03   SXY     -.634117-03
                        VXX      .237887-02   VYY     -.669336-03
            NODE 147          MXX     -.134739-02   MYY     -.659900-03   MXY     -.290039-03
            NODE 168          MXX     -.221714-02   MYY     -.968812-03   MXY     -.824418-03
            NODE 146          MXX     -.298166-02   MYY     -.135415-02   MXY     -.646160-03

71          CENTROID    SXX      .136925-01   SYY      .300961-02   SXY      .149952-02
                        VXX      .166587-03   VYY      .117016-03
            NODE 168          MXX      .170842-03   MYY      .559958-03   MXY     -.574750-05
            NODE 147          MXX     -.214933-03   MYY      .103824-03   MXY      .612911-04
            NODE 169          MXX      .515512-03   MYY      .105168-02   MXY      .567767-04

72          CENTROID    SXX      .289937-01   SYY      .625039-02   SXY      .169822-02
                        VXX      .117625-01   VYY      .637202-02
            NODE 169          MXX      .835163-03   MYY      .707955-03   MXY     -.109142-03
            NODE 147          MXX     -.468541-02   MYY     -.485057-02   MXY     -.123646-03
            NODE 177          MXX      .531849-02   MYY      .240560-02   MXY     -.116394-03

73          CENTROID    SXX      .164411-01   SYY      .210804-02   SXY     -.572305-02
                        VXX     -.139869-01   VYY      .944573-02
            NODE 148          MXX     -.396987-02   MYY     -.367503-02   MXY     -.279420-03
            NODE 169          MXX      .103699-02   MYY      .774556-03   MXY     -.109142-03
            NODE 177          MXX      .563233-02   MYY      .294010-02   MXY     -.194281-03

74          CENTROID    SXX      .125285-01   SYY      .495634-02   SXY     -.705562-03
                        VXX     -.316188-03   VYY     -.679513-04
            NODE 148          MXX      .503012-03   MYY      .745732-03   MXY     -.263495-03
            NODE 170          MXX      .550794-03   MYY      .134740-02   MXY     -.172988-04
            NODE 169          MXX      .972495-03   MYY      .120539-02   MXY     -.107792-03

75          CENTROID    SXX      .525952-03   SYY      .181505-02   SXY      .516208-04
                        VXX     -.974245-03   VYY     -.414357-03
            NODE 170          MXX     -.130157-02   MYY      .119737-03   MXY      .260371-03
            NODE 148          MXX     -.128346-02   MYY     -.905374-03   MXY     -.203463-03
            NODE 149          MXX     -.180411-02   MYY     -.460015-03   MXY      .284553-04

167         CENTROID    SXX      .181817-01   SYY      .764146-02   SXY      .136701-02
                        VXX      .115653-01   VYY     -.746052-02
            NODE 186          MXX      .583537-02   MYY      .633033-02   MXY      .150363-03
            NODE 170          MXX      .618355-03   MYY      .753310-03   MXY      .260371-03
            NODE 149          MXX     -.241232-02   MYY      .410478-03   MXY      .205361-03
```

```
76    CENTROID   SXX    -.231910-03   SYY    -.227463-02   SXY    -.536471-02
                 VXX    -.526132-02   VYY    -.105059-02
      NODE 178        MXX    -.640517-02   MYY    -.557332-02   MXY    -.1675[illegible]2-03
      NODE 170        MXX    -.[illegible]04436-02   MYY    -.168876-03   MXY    .340[illegible]9-04
      NODE 186        MXX    .480106-02   MYY    .354490-02   MXY    .245445-03

77    CENTROID   SXX    -.462333-02   SYY    .428045-02   SXY    -.540894-02
                 VXX    .638316-01   VYY    -.125573-01
      NODE 150        MXX    .900753-02   MYY    .935896-02   MXY    -.105967-02
      NODE 170        MXX    .927849-04   MYY    .847541-03   MXY    -.523639-03
      NODE 178        MXX    -.421719-02   MYY    -.430344-02   MXY    -.299836-02

78    CENTROID   SXX    .840434-02   SYY    .130005-01   SXY    .125343-02
                 VXX    .381160-03   VYY    -.774097-03
      NODE 178        MXX    .263571-03   MYY    .141448-02   MXY    .306906-05
      NODE 150        MXX    .655452-03   MYY    .217766-02   MXY    .496723-03
      NODE 171        MXX    .212887-03   MYY    .847990-03   MXY    .298172-03

79    CENTROID   SXX    .155314-01   SYY    .167981-01   SXY    .702664-02
                 VXX    -.542374-02   VYY    -.670859-02
      NODE 171        MXX    .200594-02   MYY    .229137-02   MXY    .676253-03
      NODE 150        MXX    .624249-02   MYY    .746838-02   MXY    .539708-03
      NODE 151        MXX    -.176616-02   MYY    -.261809-03   MXY    -.311100-03

80    CENTROID   SXX    .147661-01   SYY    .558871-02   SXY    .213046-02
                 VXX    -.629555-03   VYY    .322465-03
      NODE 119        MXX    -.629692-03   MYY    -.159367-03   MXY    -.634746-06
      NODE 171        MXX    .536418-03   MYY    .110651-02   MXY    -.634[illegible]-06
      NODE 151        MXX    -.469926-03   MYY    -.208679-04   MXY    .400503-03

81    CENTROID   SXX    .151779-01   SYY    .683659-02   SXY    -.277606-02
                 VXX    -.447309-03   VYY    -.208722-03
      NODE 171        MXX    .193804-03   MYY    .892816-03   MXY    -.634753-06
      NODE 119        MXX    -.597030-03   MYY    -.495882-04   MXY    -.634[illegible]3-06
      NODE 163        MXX    -.581861-03   MYY    .118219-03   MXY    -.289260-03

82    CENTROID   SXX    .187039-01   SYY    .179760-01   SXY    -.806243-02
                 VXX    -.850633-02   VYY    .107151-01
      NODE 162        MXX    .101975-01   MYY    .113121-01   MXY    -.853905-03
      NODE 171        MXX    .270852-02   MYY    .267750-02   MXY    -.102019-02
      NODE 163        MXX    -.227095-02   MYY    -.350499-03   MXY    .755616-03

83    CENTROID   SXX    .815292-02   SYY    .122386-01   SXY    -.163734-02
                 VXX    .499209-03   VYY    .154009-02
      NODE 162        MXX    .134858-02   MYY    .346654-02   MXY    -.708253-03
      NODE 170        MXX    .476364-03   MYY    .205931-02   MXY    .306906-05
      NODE 171        MXX    -.151053-03   MYY    .555846-03   MXY    -.431254-03
```

```
84          CENTROID    SXX     -.936079-02   SYY      .186946-01   SXY      .584543-02
                        VXX      .784189-01   VYY      .152172-01
            NODE 170          MXX      .745471-03   MYY      .216849-02   MXY      .215702-03
            NODE 162          MXX      .891064-02   MYY      .107082-01   MXY     -.282293-03
            NODE 185          MXX     -.594461-02   MYY     -.512834-02   MXY      .270714-02

85          CENTROID    SXX      .138373-02   SYY     -.190839-02   SXY      .664673-02
                        VXX     -.582264-02   VYY      .104184-02
            NODE 170          MXX     -.178989-02   MYY     -.392567-03   MXY      .334026-03
            NODE 185          MXX     -.791663-02   MYY     -.656846-02   MXY      .561481-03
            NODE 187          MXX      .441303-02   MYY      .337606-02   MXY      .915027-04

168         CENTROID    SXX      .205872-01   SYY      .754377-02   SXY      .783382-03
                        VXX      .971797-02   VYY      .647912-02
            NODE 170          MXX      .133203-02   MYY      .117898-02   MXY     -.139305-03
            NODE 187          MXX      .575590-02   MYY      .644865-02   MXY      .119138-03
            NODE 161          MXX     -.133305-02   MYY      .882790-03   MXY     -.100834-04

86          CENTROID    SXX      .124266-02   SYY      .116007-02   SXY      .107970-02
                        VXX      .129122-02   VYY     -.595721-03
            NODE 160          MXX     -.189107-02   MYY     -.145744-02   MXY      .170211-03
            NODE 170          MXX     -.582939-03   MYY      .547037-03   MXY     -.139705-03
            NODE 161          MXX     -.362284-03   MYY      .509999-04   MXY      .154134-04

87          CENTROID    SXX      .123890-01   SYY      .450636-02   SXY      .218853-03
                        VXX     -.328662-03   VYY      .789971-04
            NODE 170          MXX      .579796-03   MYY      .143529-02   MXY     -.172588-04
            NODE 160          MXX      .433570-03   MYY      .662245-03   MXY      .261315-03
            NODE 169          MXX      .982106-03   MYY      .126398-02   MXY      .924221-04

88          CENTROID    SXX      .159852-01   SYY      .187070-02   SXY      .682630-02
                        VXX     -.137489-01   VYY     -.920565-02
            NODE 169          MXX      .110621-02   MYY      .820724-03   MXY      .104209-03
            NODE 160          MXX     -.385505-02   MYY     -.347026-02   MXY      .309018-03
            NODE 184          MXX      .555127-02   MYY      .287771-02   MXY      .206613-03

89          CENTROID    SXX      .273333-01   SYY      .561557-02   SXY     -.122933-02
                        VXX      .116333-01   VYY     -.625711-02
            NODE 159          MXX     -.464658-02   MYY     -.481330-02   MXY      .109630-03
            NODE 169          MXX      .907782-03   MYY      .755244-03   MXY      .104209-03
            NODE 184          MXX      .522898-02   MYY      .227665-02   MXY      .106920-03

90          CENTROID    SXX      .139324-01   SYY      .373687-02   SXY     -.295670-04
                        VXX      .178966-03   VYY     -.137840-03
            NODE 159          MXX     -.292177-03   MYY     -.108593-04   MXY     -.615969-04
            NODE 168          MXX      .146619-03   MYY      .486552-03   MXY     -.574750-05
            NODE 169          MXX      .515558-03   MYY      .105705-02   MXY     -.704176-04

91          CENTROID    SXX     -.387803-02   SYY      .688850-03   SXY      .203033-02
```

```
                    VXX      .183105-02   VYY      .549661-03
        NODE 168          MXX     -.211475-02   MYY     -.947991-03   MXY      .782060-03
        NODE 159          MXX     -.152740-02   MYY     -.907930-03   MXY      .260600-03
        NODE 158          MXX     -.268066-02   MYY     -.124035-02   MXY      .595105-03

92      CENTROID     SXX      .136269-01   SYY      .113719-02   SXY      .949566-02
                    VXX     -.191956-01   VYY     -.177945-01
        NODE 168          MXX     -.131426-04   MYY     -.376562-03   MXY      .420598-03
        NODE 158          MXX     -.513526-02   MYY     -.559302-02   MXY      .398313-03
        NODE 183          MXX      .548017-02   MYY      .251768-02   MXY      .409455-03

93      CENTROID     SXX      .170963-01   SYY      .228209-02   SXY      .123257-02
                    VXX      .396049-02   VYY     -.567348-04
        NODE 139          MXX     -.409658-02   MYY     -.381587-02   MXY      .110015-03
        NODE 168          MXX     -.731764-03   MYY     -.613707-03   MXY      .420598-03
        NODE 183          MXX      .420690-02   MYY      .243114-02   MXY      .265306-03

94      CENTROID     SXX      .453793-02   SYY     -.283573-02   SXY      .239565-02
                    VXX     -.863427-03   VYY      .376149-03
        NODE 131          MXX     -.188750-02   MYY     -.147359-02   MXY      .231399-03
        NODE 168          MXX     -.747175-03   MYY     -.911753-03   MXY      .331767-03
        NODE 139          MXX      .105187-02   MYY      .559381-03   MXY     -.145863-03

95      CENTROID     SXX     -.483869-02   SYY     -.225425-02   SXY      .288736-02
                    VXX     -.106559-02   VYY      .163206-03
        NODE 139          MXX      .601610-03   MYY      .689747-03   MXY     -.176185-04
        NODE 167          MXX      .127155-02   MYY      .139961-02   MXY      .505051-04
        NODE 121          MXX     -.104100-02   MYY     -.656342-03   MXY      .164433-04

96      CENTROID     SXX      .576208-02   SYY      .358326-02   SXY     -.729372-03
                    VXX     -.701055-02   VYY     -.520324-03
        NODE 167          MXX     -.919248-03   MYY     -.108390-02   MXY     -.449024-03
        NODE 139          MXX     -.689403-02   MYY     -.661115-02   MXY      .314723-03
        NODE 182          MXX      .699096-02   MYY      .335709-02   MXY     -.671504-04

97      CENTROID     SXX      .253371-01   SYY      .100430-01   SXY     -.439034-02
                    VXX      .233446-01   VYY     -.140071-01
        NODE 157          MXX     -.933986-02   MYY     -.859327-02   MXY     -.836753-03
        NODE 167          MXX     -.628235-03   MYY     -.987870-03   MXY     -.449024-03
        NODE 182          MXX      .862830-02   MYY      .403638-02   MXY     -.642888-03

98      CENTROID     SXX     -.225476-01   SYY      .120650-02   SXY     -.142807-02
                    VXX     -.699966-02   VYY      .937645-03
        NODE 156          MXX     -.627507-03   MYY      .191183-04   MXY     -.775954-04
        NODE 167          MXX     -.299639-02   MYY     -.162449-02   MXY     -.105592-02
        NODE 157          MXX     -.589791-02   MYY     -.356921-02   MXY     -.832517-03

99      CENTROID     SXX     -.861938-02   SYY     -.167110-02   SXY     -.157431-02
                    VXX     -.149133-03   VYY      .134714-03
```

```
        NODE 167          MXX     .464937-04   MYY     .657258-03   MXY    -.292219-04
        NODE 156          MXX    -.112229-03   MYY     .118541-03   MXY     .483356-03
        NODE 166          MXX     .298948-03   MYY     .234880-03   MXY     .150893-03

100       CENTROID   SXX    -.629582-02   SYY    -.525100-02   SXY     .312111-02
                     VXX    -.194061-01   VYY    -.121834-01
        NODE 166          MXX    -.168142-02   MYY    -.184721-02   MXY     .342309-03
        NODE 156          MXX    -.896800-02   MYY    -.107265-01   MXY    -.224185-03
        NODE 181          MXX     .694554-02   MYY     .288881-02   MXY     .590618-04

101       CENTROID   SXX     .409900-03   SYY     .563803-03   SXY    -.169329-02
                     VXX     .157726-02   VYY    -.371341-03
        NODE 155          MXX    -.465406-03   MYY    -.934480-03   MXY     .327849-04
        NODE 166          MXX     .890278-03   MYY     .165420-03   MXY     .143464-03
        NODE 156          MXX     .274470-02   MYY     .101492-02   MXY    -.546515-04

102       CENTROID   SXX    -.126836-01   SYY    -.493786-02   SXY    -.446445-02
                     VXX     .355779-03   VYY    -.278374-04
        NODE 155          MXX    -.489320-03   MYY    -.264404-03   MXY    -.267508-03
        NODE 165          MXX    -.628596-03   MYY    -.145000-03   MXY     .196998-04
        NODE 166          MXX     .540447-03   MYY     .460978-03   MXY    -.453699-04

103       CENTROID   SXX    -.278993-01   SYY    -.113547-01   SXY    -.469868-03
                     VXX    -.223298-02   VYY     .128554-04
        NODE 165          MXX    -.229545-02   MYY    -.130377-02   MXY     .494996-03
        NODE 155          MXX    -.341837-02   MYY    -.302949-02   MXY    -.854625-04
        NODE 154          MXX    -.802446-03   MYY    -.194121-03   MXY     .197868-03

104       CENTROID   SXX    -.191376-01   SYY    -.784764-02   SXY    -.210033-02
                     VXX    -.163067-01   VYY    -.127231-01
        NODE 165          MXX     .263155-03   MYY    -.595939-03   MXY    -.122469-04
        NODE 154          MXX    -.414023-02   MYY    -.455357-02   MXY     .115440-03
        NODE 180          MXX     .640610-02   MYY     .340705-02   MXY     .515766-04

105       CENTROID   SXX    -.110209-01   SYY    -.516915-02   SXY     .453243-02
                     VXX     .118296-01   VYY     .930105-02
        NODE 165          MXX     .201727-02   MYY     .109772-02   MXY    -.122468-04
        NODE 180          MXX     .813116-02   MYY     .859012-02   MXY    -.122468-04
        NODE 153          MXX    -.334100-02   MYY    -.235448-02   MXY    -.720142-03

106       CENTROID   SXX    -.330869-01   SYY    -.213001-01   SXY    -.789762-0[illegible]
                     VXX     .314808-03   VYY     .201754-02
        NODE 165          MXX    -.448018-03   MYY     .304255-03   MXY    -.606[illegible]47-03
        NODE 153          MXX    -.119937-02   MYY    -.891977-04   MXY    -.733[illegible]74-03
        NODE 152          MXX    -.284404-02   MYY    -.203081-02   MXY    -.341[illegible]53-03

107       CENTROID   SXX    -.132214-01   SYY     .782719-03   SXY     .263296-02
                     VXX    -.296825-01   VYY    -.114997-01
        NODE 179          MXX     .115731-01   MYY     .111599-01   MXY    -.100[illegible]20-02
```

	NODE 165	MXX	.135591-02	MYY	.218087-02	MXY	.319795-03	
	NODE 152	MXX	-.430632-02	MYY	-.369813-02	MXY	-.130906-02	
108	CENTROID	SXX	-.955221-02	SYY	-.435476-02	SXY	.450712-02	
		VXX	-.157052-02	VYY	.284787-02			
	NODE 165	MXX	-.148521-02	MYY	-.957522-03	MXY	.240678-05	
	NODE 179	MXX	.203039-02	MYY	.287443-02	MXY	.340175-03	
	NODE 164	MXX	.962402-03	MYY	-.575402-03	MXY	.171291-03	
109	CENTROID	SXX	-.113363-02	SYY	.331917-02	SXY	-.158806-02	
		VXX	-.235835-03	VYY	-.674704-04			
	NODE 1	MXX	.658187-03	MYY	-.222895-03	MXY	.849230-05	
	NODE 102	MXX	-.752130-03	MYY	-.134761-02	MXY	.146504-03	
	NODE 101	MXX	-.502353-03	MYY	-.207775-02	MXY	.774991-04	
110	CENTROID	SXX	.697931-02	SYY	.510461-02	SXY	-.190214-02	
		VXX	.746606-03	VYY	.182102-03			
	NODE 102	MXX	-.413585-02	MYY	-.405067-02	MXY	.475418-03	
	NODE 1	MXX	-.294477-02	MYY	-.375603-02	MXY	.422328-04	
	NODE 2	MXX	-.164010-02	MYY	-.104613-02	MXY	.245020-03	
111	CENTROID	SXX	.778176-02	SYY	.536942-02	SXY	-.637275-02	
		VXX	.470065-02	VYY	-.160530-02			
	NODE 3	MXX	.179415-02	MYY	.568235-03	MXY	.950126-03	
	NODE 102	MXX	-.150195-02	MYY	-.164305-02	MXY	.475418-03	
	NODE 2	MXX	-.336072-02	MYY	-.165184-02	MXY	.614272-03	
112	CENTROID	SXX	-.606630-02	SYY	-.186438-01	SXY	-.266605-01	
		VXX	-.553050-04	VYY	.789434-04			
	NODE 102	MXX	-.122009-03	MYY	-.769901-03	MXY	.697187-03	
	NODE 3	MXX	.380331-03	MYY	-.253061-03	MXY	.690842-03	
	NODE 103	MXX	-.152312-03	MYY	-.104003-02	MXY	.694014-03	
113	CENTROID	SXX	-.103514-01	SYY	-.187618-01	SXY	.169196-01	
		VXX	.180620-03	VYY	.724604-04			
	NODE 4	MXX	.504111-03	MYY	-.689304-03	MXY	-.538790-03	
	NODE 105	MXX	-.328576-03	MYY	-.191569-02	MXY	-.736596-03	
	NODE 104	MXX	-.346410-03	MYY	-.197625-02	MXY	-.637693-03	
114	CENTROID	SXX	.166327-01	SYY	-.281176-02	SXY	.715319-02	
		VXX	-.169404-02	VYY	-.107086-02			
	NODE 105	MXX	-.210948-02	MYY	-.298952-02	MXY	-.381337-03	
	NODE 4	MXX	.461686-03	MYY	-.591465-03	MXY	-.619046-03	
	NODE 5	MXX	-.143202-02	MYY	-.122372-02	MXY	-.561866-03	
115	CENTROID	SXX	.219982-01	SYY	-.104116-02	SXY	.190401-01	
		VXX	.341861-02	VYY	.458647-02			
	NODE 105	MXX	-.100190-02	MYY	-.917030-03	MXY	-.435994-04	
	NODE 4	MXX	-.109455-02	MYY	-.601662-03	MXY	-.435994-04	

```
        NODE 6          MXX     .870589-03   MTY     .641790-03   MXY     .929010-04

116       CENTROID   SXX    -.165534-01   STY    -.371256-01   SXY    -.192957-01
                     VXX    -.260587-03   VTY     .588916-03
        NODE 105        MXX    -.210458-03   MTY    -.758139-03   MXY     .115087-03
        NODE 6          MXX     .298963-03   MTY     .838916-04   MXY     .284966-04
        NODE 106        MXX    -.250805-03   MTY    -.785111-03   MXY     .717918-04

117       CENTROID   SXX    -.130541-01   STY    -.217488-01   SXY     .276230-01
                     VXX     .286594-04   VTY     .405555-04
        NODE 7          MXX    -.172592-04   MTY    -.155757-03   MXY     .165738-04
        NODE 108        MXX    -.267392-04   MTY    -.233105-03   MXY    -.641007-04
        NODE 107        MXX    -.718616-05   MTY    -.113967-03   MXY    -.237635-04

118       CENTROID   SXX     .594335-02   STY    -.241566-01   SXY     .275916-01
                     VXX     .212862-03   VTY    -.131333-03
        NODE 108        MXX    -.313888-03   MTY    -.464888-03   MXY     .171256-05
        NODE 7          MXX    -.185179-03   MTY    -.327516-03   MXY     .120098-04
        NODE 8          MXX     .216196-03   MTY     .118194-03   MXY     .389632-05

119       CENTROID   SXX     .826999-02   STY    -.193808-01   SXY     .202443-01
                     VXX    -.496770-04   VTY    -.251765-03
        NODE 9          MXX     .177299-03   MTY     .188475-03   MXY     .189076-04
        NODE 110        MXX    -.511877-04   MTY    -.712882-04   MXY     .117258-03
        NODE 109        MXX    -.141278-03   MTY    -.368317-03   MXY     .680679-04

120       CENTROID   SXX    -.578076-01   STY    -.741875-02   SXY     .402498-01
                     VXX     .185518-03   VTY     .136892-03
        NODE 110        MXX     .145503-03   MTY     .174104-03   MXY    -.358932-04
        NODE 9          MXX    -.263183-03   MTY    -.254933-03   MXY     .261036-04
        NODE 10         MXX     .238890-03   MTY     .159162-04   MXY     .112807-04

121       CENTROID   SXX    -.313135-01   STY     .132430-02   SXY     .530397-03
                     VXX    -.121418-03   VTY     .108250-03
        NODE 11         MXX     .522993-04   MTY    -.309228-04   MXY    -.164774-03
        NODE 110        MXX     .148101-03   MTY     .174962-03   MXY    -.358932-04
        NODE 10         MXX     .297819-03   MTY     .257926-04   MXY    -.859770-04

122       CENTROID   SXX     .420435-02   STY    -.247994-01   SXY     .162661-01
                     VXX     .138720-03   VTY    -.529724-03
        NODE 110        MXX    -.146414-03   MTY    -.327588-03   MXY    -.279452-03
        NODE 11         MXX     .400663-03   MTY     .250929-03   MXY    -.242643-03
        NODE 111        MXX    -.160868-03   MTY    -.649860-03   MXY    -.261047-03

123       CENTROID   SXX     .143694-02   STY    -.213626-01   SXY    -.860042-02
                     VXX    -.760918-04   VTY     .699736-04
        NODE 12         MXX    -.177643-03   MTY    -.167647-03   MXY    -.292521-03
        NODE 113        MXX    -.927230-04   MTY    -.845048-04   MXY    -.244694-03
        NODE 112        MXX     .245597-04   MTY     .281530-04   MXY    -.268603-03
```

124	CENTROID	SXX	-.637959-01	SYY	-.261551-01	SXY	.960201-02	
		VXX	.736052-03	VYY	.602137-04			
	NODE 113	MXX	-.542961-04	MYY	-.418177-04	MXY	-.359345-03	
	NODE 12	MXX	-.714904-03	MYY	-.706324-03	MXY	-.253414-03	
	NODE 13	MXX	.552110-03	MYY	.177868-03	MXY	-.282857-03	
125	CENTROID	SXX	-.111170-01	SYY	-.683485-02	SXY	-.333503-01	
		VXX	-.592696-03	VYY	-.160759-02			
	NODE 14	MXX	-.230268-03	MYY	.385984-03	MXY	.825279-04	
	NODE 115	MXX	.424557-03	MYY	.385756-03	MXY	.435289-03	
	NODE 114	MXX	-.124452-02	MYY	-.127294-02	MXY	.259459-03	
126	CENTROID	SXX	-.291832-01	SYY	-.155207-01	SXY	-.198227-01	
		VXX	.193343-02	VYY	.446026-02			
	NODE 115	MXX	.236859-02	MYY	.312204-02	MXY	.855608-05	
	NODE 14	MXX	-.675024-03	MYY	-.416221-04	MXY	.733687-04	
	NODE 15	MXX	.137577-03	MYY	-.534628-03	MXY	.137270-03	
127	CENTROID	SXX	-.226039-01	SYY	-.133496-01	SXY	.511396-01	
		VXX	-.385645-02	VYY	.181949-02			
	NODE 16	MXX	-.216640-02	MYY	-.121560-02	MXY	-.403030-03	
	NODE 115	MXX	.688331-03	MYY	.170696-02	MXY	.855603-05	
	NODE 15	MXX	.136686-02	MYY	.298700-03	MXY	-.943848-04	
128	CENTROID	SXX	-.257758-02	SYY	.132042+00	SXY	.877691-01	
		VXX	.488111-03	VYY	.279218-02			
	NODE 115	MXX	-.331109-03	MYY	.657085-03	MXY	-.173665-03	
	NODE 16	MXX	-.167145-02	MYY	-.663754-03	MXY	-.573523-04	
	NODE 116	MXX	.569109-03	MYY	.211893-02	MXY	-.116658-03	
129	CENTROID	SXX	.228593-03	SYY	-.757016-02	SXY	-.613702-02	
		VXX	.637306-05	VYY	-.272715-02			
	NODE 17	MXX	.540407-02	MYY	.152330-02	MXY	.801028-02	
	NODE 118	MXX	.536238-02	MYY	.253018-02	MXY	.734577-02	
	NODE 117	MXX	.141123-02	MYY	-.855705-03	MXY	.767802-02	
130	CENTROID	SXX	-.200468-01	SYY	.603055-02	SXY	.936820-02	
		VXX	.279405-02	VYY	.348610-02			
	NODE 118	MXX	.718865-03	MYY	.968298-03	MXY	.539283-02	
	NODE 17	MXX	.533744-04	MYY	-.251578-02	MXY	.717906-02	
	NODE 18	MXX	.479510-02	MYY	.669556-03	MXY	.641679-02	
131	CENTROID	SXX	-.282996-01	SYY	.330715-02	SXY	-.150391-01	
		VXX	.108697-02	VYY	-.240427-02			
	NODE 19	MXX	.441123-02	MYY	-.110063-02	MXY	.393323-02	
	NODE 118	MXX	.793910-03	MYY	-.174152-02	MXY	.539296-02	
	NODE 18	MXX	.587034-02	MYY	.792073-03	MXY	.467832-02	

```
132   CENTROID   SXX    .476458-02   SYY    -.590492-02   SXY    .150913-01
                 VXX   -.112911-02   VYY     .302634-02
      NODE 118        MXX    .737047-02   MYY    .157502-02   MXY    .379415-02
      NODE 19         MXX    .108781-01   MYY    .229083-03   MXY    .141382-02
      NODE 119        MXX    .525908-02   MYY   -.108352-03   MXY    .260399-02

133   CENTROID   SXX   -.968065-03   SYY     .337380-02   SXY   -.969978-03
                 VXX    .237463-03   VYY     .681188-04
      NODE 1          MXX   -.659736-03   MYY    .221458-03   MXY    .849262-05
      NODE 122        MXX    .760575-03   MYY    .136369-02   MXY   -.125882-03
      NODE 101        MXX    .505270-03   MYY    .208624-02   MXY   -.586947-04

134   CENTROID   SXX    .673112-02   SYY     .520075-02   SXY   -.138467-02
                 VXX   -.837249-03   VYY    -.220522-03
      NODE 122        MXX    .411919-02   MYY    .404949-02   MXY   -.451007-03
      NODE 1          MXX    .297861-02   MYY    .378967-02   MXY   -.253986-04
      NODE 22         MXX    .156297-02   MYY    .100771-02   MXY   -.224846-03

135   CENTROID   SXX    .716718-02   SYY     .534465-02   SXY   -.588120-02
                 VXX   -.462433-02   VYY     .157726-02
      NODE 23         MXX   -.178416-02   MYY   -.560700-03   MXY   -.915850-03
      NODE 122        MXX    .146701-02   MYY    .162819-02   MXY   -.451007-03
      NODE 22         MXX    .328977-02   MYY    .162595-02   MXY   -.586421-03

136   CENTROID   SXX   -.563314-02   SYY    -.182803-01   SXY   -.259966-01
                 VXX    .500956-04   VYY    -.754083-04
      NODE 122        MXX    .130585-03   MYY    .789682-03   MXY   -.668889-03
      NODE 23         MXX   -.372083-03   MYY    .263117-03   MXY   -.658432-03
      NODE 123        MXX    .151595-03   MYY    .104211-02   MXY   -.663660-03

137   CENTROID   SXX   -.990911-02   SYY    -.184440-01   SXY    .160057-01
                 VXX   -.195664-03   VYY    -.785917-04
      NODE 24         MXX   -.526143-03   MYY    .705011-03   MXY    .487892-03
      NODE 125        MXX    .341597-03   MYY    .199312-02   MXY    .699097-03
      NODE 124        MXX    .364972-03   MYY    .205136-02   MXY    .593495-03

138   CENTROID   SXX    .162208-01   SYY    -.292664-02   SXY    .648686-02
                 VXX    .164776-02   VYY     .107029-02
      NODE 125        MXX    .218773-02   MYY    .310288-02   MXY    .329121-03
      NODE 24         MXX   -.423253-03   MYY    .971052-03   MXY    .569[illegible]65-03
      NODE 25         MXX    .140931-02   MYY    .121914-02   MXY    .512[illegible]99-03

139   CENTROID   SXX    .217676-01   SYY    -.109618-02   SXY    .178154-0[illegible]
                 VXX   -.351426-02   VYY    -.472631-02
      NODE 125        MXX    .100357-02   MYY    .934031-03   MXY    .428078-04
      NODE 25         MXX    .171799-02   MYY    .613610-03   MXY    .428[illegible]78-04
      NODE 26         MXX   -.922239-03   MYY   -.668550-03   MXY   -.103517-03
```

```
140        CENTROID    SXX     -.163481-01   SYY     -.385284-01   SXY     -.227304-01
                       VXX      .264322-03   VYY     -.644338-03
           NODE 125          MXX      .179357-03   MYY      .648775-03   MXY     -.975117-04
           NODE 26           MXX     -.331079-03   MYY     -.109896-03   MXY     -.328831-04
           NODE 126          MXX      .244367-03   MYY      .769394-03   MXY     -.651974-04

141        CENTROID    SXX     -.145171-01   SYY     -.194025-01   SXY      .252861-01
                       VXX     -.439023-04   VYY     -.100789-03
           NODE 27           MXX      .982883-04   MYY      .251284-03   MXY     -.173014-04
           NODE 128          MXX      .333680-04   MYY      .304924-03   MXY      .123631-03
           NODE 127          MXX     -.148742-04   MYY      .416683-04   MXY      .531647-04

142        CENTROID    SXX      .988821-02   SYY     -.236151-01   SXY      .257872-01
                       VXX     -.313873-03   VYY      .153993-03
           NODE 128          MXX      .391504-03   MYY      .567703-03   MXY      .102804-04
           NODE 27           MXX      .264871-03   MYY      .420204-03   MXY     -.145227-04
           NODE 28           MXX     -.315131-03   MYY     -.186086-03   MXY      .115943-06

143        CENTROID    SXX      .388857-02   SYY     -.251939-01   SXY      .224637-01
                       VXX      .584896-05   VYY      .185524-04
           NODE 29           MXX      .485913-04   MYY     -.136203-04   MXY     -.373696-04
           NODE 130          MXX     -.131540-04   MYY     -.608446-04   MXY     -.830365-04
           NODE 129          MXX      .273999-04   MYY     -.875808-05   MXY     -.602030-04

144        CENTROID    SXX     -.590672-01   SYY     -.850812-02   SXY      .405956-01
                       VXX     -.252038-03   VYY     -.181481-03
           NODE 130          MXX     -.182920-03   MYY     -.269768-03   MXY      .401083-04
           NODE 29           MXX      .361274-03   MYY      .302989-03   MXY     -.497109-04
           NODE 30           MXX     -.320088-03   MYY     -.668115-04   MXY     -.252860-04

145        CENTROID    SXX     -.296662-01   SYY      .119422-02   SXY      .405476-02
                       VXX      .909383-04   VYY     -.166800-03
           NODE 31           MXX     -.110381-03   MYY     -.744075-04   MXY      .140291-03
           NODE 130          MXX     -.238517-03   MYY     -.288115-03   MXY      .401083-04
           NODE 30           MXX     -.198202-03   MYY      .150369-04   MXY      .772442-04

146        CENTROID    SXX     -.203084-02   SYY     -.231749-01   SXY      .160542-01
                       VXX     -.116037-03   VYY      .449794-03
           NODE 130          MXX      .111068-03   MYY      .237641-03   MXY      .246362-03
           NODE 31           MXX     -.333327-03   MYY     -.238520-03   MXY      .209171-03
           NODE 131          MXX      .138346-03   MYY      .521345-03   MXY      .227767-03

147        CENTROID    SXX     -.114382-02   SYY     -.213380-01   SXY     -.648000-02
                       VXX      .319903-04   VYY     -.105503-03
           NODE 32           MXX      .165512-03   MYY      .189587-03   MXY      .235464-03
           NODE 133          MXX      .424329-04   MYY      .674021-04   MXY      .211397-03
           NODE 132          MXX     -.241564-04   MYY     -.373398-04   MXY      .223431-03

148        CENTROID    SXX     -.652515-01   SYY     -.251874-01   SXY      .111997-01
```

```
                    VXX     -.718039-03   VTY      .504963-04
        NODE 133          MXX      .142200-03   MYY      .163996-03   MXY      .291801-03
        NODE 32           MXX      .701219-03   MYY      .726685-03   MXY      .191032-03
        NODE 33           MXX     -.562836-03   MYY     -.204774-03   MXY      .221537-03

149     CENTROID    SXX      .132133-01   SYY     -.100884-01   SXY     -.150653-01
                    VXX      .873563-04   VTY      .161141-03
        NODE 34           MXX     -.911102-06   MYY      .186523-03   MXY      .144682-03
        NODE 135          MXX      .512268-04   MYY      .175684-03   MXY      .477625-04
        NODE 134          MXX      .619526-04   MYY      .330207-03   MXY      .962221-04

150     CENTROID    SXX     -.104452+00   SYY     -.117085-01   SXY     -.232480-02
                    VXX     -.133304-02   VTY      .161412-02
        NODE 135          MXX      .119012-02   MYY      .125843-02   MXY     -.386419-04
        NODE 34           MXX      .959863-03   MYY      .107834-02   MXY      .385514-04
        NODE 35           MXX     -.305498-03   MYY     -.329593-03   MXY      .232554-04

151     CENTROID    SXX     -.459202-01   SYY      .760686-02   SXY     -.352785-01
                    VXX     -.169042-02   VTY      .271731-02
        NODE 36           MXX      .549413-03   MYY      .776759-03   MXY     -.182104-03
        NODE 135          MXX      .986813-03   MYY      .165468-02   MXY     -.386418-04
        NODE 35           MXX     -.412057-03   MYY     -.593385-03   MXY     -.100715-03

152     CENTROID    SXX      .459097-02   SYY      .608685-01   SXY      .105023-01
                    VXX     -.165841-02   VTY      .258963-02
        NODE 135          MXX      .720357-04   MYY      .252524-03   MXY     -.197364-03
        NODE 36           MXX     -.204701-04   MYY     -.429313-03   MXY     -.389289-03
        NODE 136          MXX      .970538-03   MYY      .140306-02   MXY     -.293326-03

153     CENTROID    SXX     -.105740-02   SYY     -.416277-02   SXY     -.593823-02
                    VXX      .445496-03   VTY      .274811-02
        NODE 37           MXX     -.380370-02   MYY     -.945999-03   MXY     -.461365-02
        NODE 138          MXX     -.295141-02   MYY     -.768944-03   MXY     -.418554-02
        NODE 137          MXX     -.946743-03   MYY      .128723-02   MXY     -.439959-02

154     CENTROID    SXX     -.224551-01   SYY      .595999-02   SXY      .101136-01
                    VXX     -.160808-02   VTY     -.988055-03
        NODE 138          MXX      .109015-02   MYY      .502866-03   MXY     -.243044-02
        NODE 37           MXX      .397400-03   MYY      .236145-02   MXY     -.404731-02
        NODE 38           MXX     -.320818-02   MYY     -.418046-03   MXY     -.333160-02

155     CENTROID    SXX     -.299658-01   SYY      .348144-02   SXY     -.133256-01
                    VXX      .711389-03   VTY     -.186355-02
        NODE 19           MXX     -.438145-02   MYY     -.141006-03   MXY     -.971840-03
        NODE 138          MXX     -.729721-03   MYY      .536367-03   MXY     -.243055-02
        NODE 32           MXX     -.341034-02   MYY      .377428-03   MXY     -.171612-02

156     CENTROID    SXX      .374507-02   SYY     -.624109-02   SXY      .174444-01
                    VXX      .261948-02   VTY     -.645188-02
```

	NODE 118		MXX	-.507914-02	MYY	-.735798-03	MXY	-.921379-03							
	NODE 19		MXX	-.882865-02	MYY	.276169-03	MXY	.141378-02							
	NODE 119		MXX	-.525604-02	MYY	-.117723-02	MXY	.246201-03							
200	NODE	5	XX	.262455-01	YY	-.423429-01	ZZ	-.219540-01	XY	-.879958-01	XZ	-.180668+00	YZ	-.985541-01	
		4	XX	.341293-01	YY	.586787-01	ZZ	.152808-01	XY	-.409798-01	XZ	-.136912+00	YZ	-.563102-02	
		104	XX	-.723459-01	YY	-.715948-01	ZZ	-.628463-01	XY	.141580-01	XZ	-.419755-01	YZ	.133545+00	
		103	XX	-.824426-01	YY	-.705798-01	ZZ	-.671393-01	XY	.105535-01	XZ	-.104466-01	YZ	.153046+00	
		40	XX	.165922-01	YY	-.140490-01	ZZ	.216151+00	XY	.122430-01	XZ	.202566-01	YZ	-.233096+00	
		41	XX	-.660906-01	YY	.644288-02	ZZ	.932769-01	XY	.117330-01	XZ	.959942-01	YZ	-.145139+00	
		141	XX	.407365-01	YY	.349131-01	ZZ	.137925+00	XY	.970033-02	XZ	.591743-01	YZ	.510823-01	
		140	XX	.105102+00	YY	.111158+00	ZZ	.286678+00	XY	.610226-02	XZ	.110878+00	YZ	.785470-01	
201	NODE	6	XX	.235867-01	YY	-.375996-01	ZZ	-.363202-01	XY	.147615-01	XZ	.452197-01	YZ	-.634018-01	
		7	XX	.494559-01	YY	-.353611-02	ZZ	-.228741-02	XY	-.308658-01	XZ	.340378-01	YZ	-.141539+00	
		107	XX	-.624300-01	YY	-.480000-01	ZZ	-.538829-01	XY	.718527-02	XZ	.493291-01	YZ	.135553-01	
		106	XX	-.761031-01	YY	-.650673-01	ZZ	-.782492-01	XY	.505674-02	XZ	.598694-01	YZ	.173043+00	
		42	XX	-.334864-02	YY	.198836-01	ZZ	.165116+00	XY	.192042-01	XZ	-.100194-01	YZ	-.611871-01	
		43	XX	-.291318-01	YY	.626064-02	ZZ	.105987+00	XY	-.262932-01	XZ	-.237962-02	YZ	-.140407+00	
		143	XX	.404501-01	YY	.511764-01	ZZ	.143772+00	XY	.666173-02	XZ	-.519714-01	YZ	.146675-01	
		142	XX	.708153-01	YY	.781474-01	ZZ	.208816+00	XY	.653320-02	XZ	-.575304-01	YZ	.175257+00	
202	NODE	8	XX	-.401104-01	YY	-.558525-01	ZZ	-.577857-01	XY	.188248-02	XZ	.670721-01	YZ	-.477527-02	
		9	XX	-.255425-01	YY	-.282564-01	ZZ	-.398636-01	XY	-.143491-01	XZ	.683106-01	YZ	-.166339+00	
		109	XX	-.191170-01	YY	-.366015-01	ZZ	-.405630-01	XY	-.820186-03	XZ	.720926-01	YZ	-.319231-01	
		108	XX	-.245564-01	YY	-.448317-01	ZZ	-.490160-01	XY	.106740-01	XZ	.706733-01	YZ	.201052+00	
		44	XX	.155237-01	YY	.418271-01	ZZ	.182579+00	XY	.735473-02	XZ	-.245392-01	YZ	-.438514-02	
		45	XX	-.155971-01	YY	.248413-01	ZZ	.111093+00	XY	-.865372-02	XZ	-.159991-01	YZ	-.167767+00	
		145	XX	.364522-01	YY	.307676-01	ZZ	.132865+00	XY	.306801-03	XZ	-.684737-01	YZ	-.333511-01	
		144	XX	.745204-01	YY	.742450-01	ZZ	.212746+00	XY	.118010-01	XZ	-.745051-01	YZ	.201442+00	
203	NODE	11	XX	-.409955-01	YY	-.613465-01	ZZ	-.599597-01	XY	-.48 464-01	XZ	-.352626+00	YZ	-.716156-01	
		12	XX	-.758122-02	YY	.860251-02	ZZ	-.214733-01	XY	.257127-01	XZ	-.345911+00	YZ	-.410594-01	
		112	XX	.155680-01	YY	-.169582-01	ZZ	-.222955-01	XY	-.330200-02	XZ	-.343081+00	YZ	-.162418-02	
		111	XX	.249419-02	YY	-.402312-01	ZZ	-.386401-01	XY	.957516-02	XZ	-.350010+00	YZ	.886246-01	
		46	XX	-.715654-03	YY	.378734-01	ZZ	.200427+00	XY	-.337959-01	XZ	.389816+00	YZ	-.716670-01	
		47	XX	-.879526-01	YY	-.978053-02	ZZ	.294945-02	XY	.417337-01	XZ	.415636+00	YZ	-.478069-01	
		147	XX	.130390-01	YY	.291906-02	ZZ	.404675-01	XY	.113468-02	XZ	.316153+00	YZ	-.837170-02	
		146	XX	.114767+00	YY	.944478-01	ZZ	.257206+00	XY	.140118-01	XZ	.297808+00	YZ	.885732-01	
204	NODE	13	XX	-.539680-01	YY	-.500875-01	ZZ	-.394407-01	XY	-.544926-01	XZ	-.456434+00	YZ	-.128439+00	
		14	XX	-.334645-01	YY	.327790-02	ZZ	-.131278-01	XY	.364332-01	XZ	-.438382+00	YZ	.677447-01	
		114	XX	.419019-01	YY	.237696-02	ZZ	.114458-01	XY	-.902444-02	XZ	-.437362+00	YZ	.838596-01	
		113	XX	.367582-01	YY	-.661051-02	ZZ	.484630-02	XY	.714243-02	XZ	-.455503+00	YZ	-.529518-01	
		48	XX	-.983174-02	YY	.176608-01	ZZ	.122327+00	XY	-.420613-01	XZ	.467044+00	YZ	-.128690+00	
		49	XX	-.583266-01	YY	.182106-02	ZZ	.732158-02	XY	.498732-01	XZ	.487725+00	YZ	.590873-01	
		149	XX	.773044-02	YY	-.366412-02	ZZ	.273110-01	XY	-.735241-02	XZ	.438405+00	YZ	.752022-01	
		148	XX	.723848-01	YY	.571465-01	ZZ	.162423+00	XY	.881446-02	XZ	.421952+00	YZ	-.532035-01	
205	NODE	16	XX	-.140826+00	YY	.615281-01	ZZ	.106724+00	XY	-.101250+00	XZ	.639784+00	YZ	.548296+00	
		17	XX	-.269784+00	YY	-.135522+00	ZZ	-.140738+00	XY	-.134425+00	XZ	.775375+00	YZ	.674192+00	
		117	XX	-.274552-01	YY	.133441-01	ZZ	-.123016-01	XY	.568061-01	XZ	.698645+00	YZ	.719796+00	
		116	XX	.154955+00	YY	.258746+00	ZZ	.269414+00	XY	.291122-01	XZ	.756807+00	YZ	.310371+00	
		50	XX	-.244145-01	YY	-.187387+00	ZZ	-.628491+00	XY	-.319479-01	XZ	-.903658+00	YZ	-.384284+00	
		51	XX	.554225+00	YY	.299412+00	ZZ	.512199+00	XY	-.235014-01	XZ	-.873338+00	YZ	-.599424+00	

	151	XX	.122214+00	YY	.114481+00	ZZ	.308608+00	XY	.315426-01	XZ	-.709154+00	YZ	-.388327+00
	150	XX	-.366442+00	YY	-.309953+00	ZZ	-.780157+00	XY	.178886-02	XZ	-.574127+00	YZ	-.482040+00
206 NODE	52	XX	.151495-01	YY	-.126969-01	ZZ	.213821+00	XY	-.117229-01	XZ	.264883-01	YZ	.237833+00
	53	XX	-.649621-01	YY	.560396-02	ZZ	.905948-01	XY	-.122093-01	XZ	.105718+00	YZ	.144951+00
	153	XX	.388027-01	YY	.336000-01	ZZ	.134050+00	XY	-.939041-02	XZ	.106106+00	YZ	-.483237-01
	152	XX	.104037+00	YY	.109433+00	ZZ	.283457+00	XY	-.596060-02	XZ	.114709+00	YZ	-.713659-01
	23	XX	.244396-01	YY	-.418291-01	ZZ	-.221600-01	XY	.375386-01	XZ	-.187215+00	YZ	.947186-01
	24	XX	.347902-01	YY	.572710-01	ZZ	.152062-01	XY	.394024-01	XZ	-.140204+00	YZ	-.223094-02
	124	XX	-.703934-01	YY	-.693808-01	ZZ	-.612995-01	XY	-.133509-01	XZ	-.474868-01	YZ	-.138189+00
	123	XX	-.800384-01	YY	-.691266-01	ZZ	-.656458-01	XY	-.992565-02	XZ	-.188725-01	YZ	-.154166+00
207 NODE	54	XX	.329699-02	YY	.230631-01	ZZ	.177726+00	XY	-.192024-01	XZ	-.137456-01	YZ	.409642-01
	55	XX	-.366719-01	YY	.609097-03	ZZ	.842131-01	XY	.241403-01	XZ	-.513123-02	YZ	.155517+00
	155	XX	.279718-01	YY	.395542-01	ZZ	.118397+00	XY	-.854623-02	XZ	-.835268-01	YZ	.244186-01
	154	XX	.773247-01	YY	.849336-01	ZZ	.222572+00	XY	-.649655-02	XZ	-.888519-01	YZ	-.208875+00
	26	XX	.213388-01	YY	-.429165-01	ZZ	-.402541-01	XY	-.124501-01	XZ	.591805-01	YZ	.435541-01
	27	XX	.556596-01	YY	.303086-02	ZZ	.543243-02	XY	.311127-01	XZ	.476775-01	YZ	.156273+00
	127	XX	-.599629-01	YY	-.447618-01	ZZ	-.491711-01	XY	-.681770-02	XZ	.675915-01	YZ	.251744-01
	126	XX	-.773361-01	YY	-.661086-01	ZZ	-.804702-01	XY	-.473802-02	XZ	.782592-01	YZ	-.206286+00
208 NODE	56	XX	.288149-02	YY	.344018-01	ZZ	.173737+00	XY	-.707942-02	XZ	.487404-02	YZ	.261844-01
	57	XX	-.161774-01	YY	.236584-01	ZZ	.133247+00	XY	.119781-01	XZ	.124985-01	YZ	.155163+00
	157	XX	.524598-01	YY	.604599-01	ZZ	.160042+00	XY	-.248395-02	XZ	-.159278-01	YZ	-.324349-02
	156	XX	.690212-01	YY	.710357-01	ZZ	.207652+00	XY	-.115627-01	XZ	-.226693-01	YZ	-.178060+00
	28	XX	-.211149-01	YY	-.471545-01	ZZ	-.494072-01	XY	-.422255-02	XZ	.273939-01	YZ	.266556-01
	29	XX	-.133779-01	YY	-.331990-01	ZZ	-.418475-01	XY	.148476-01	XZ	.253803-01	YZ	.159528+00
	129	XX	-.311705-01	YY	-.389674-01	ZZ	-.496226-01	XY	.119788-03	XZ	.257589-01	YZ	-.287824-02
	128	XX	-.372728-01	YY	-.510553-01	ZZ	-.560265-01	XY	-.895894-02	XZ	.277544-01	YZ	-.177339+00
209 NODE	58	XX	.530815-05	YY	.339721-01	ZZ	.187196+00	XY	.311092-01	XZ	.357214+00	YZ	.558081-01
	59	XX	-.737217-01	YY	-.260999-02	ZZ	.173202-01	XY	-.365762-01	XZ	.359920+00	YZ	.571862-01
	159	XX	.143195-01	YY	.646463-02	ZZ	.493684-01	XY	-.184699-02	XZ	.273112+00	YZ	.133040-01
	158	XX	.195532+00	YY	.912971-01	ZZ	.240937+00	XY	-.141052-01	XZ	.256929+00	YZ	-.925731-01
	31	XX	-.437796-01	YY	-.610994-01	ZZ	-.571147-01	XY	.453198-01	XZ	-.302114+00	YZ	.567093-01
	32	XX	-.141790-01	YY	.321222-02	ZZ	-.245795-01	XY	-.214364-01	XZ	-.295368+00	YZ	.509403-01
	132	XX	.100373-01	YY	-.191518-01	ZZ	-.239699-01	XY	.928207-03	XZ	-.294364+00	YZ	.705881-02
	131	XX	.271333-02	YY	-.328506-01	ZZ	-.324500-01	XY	-.113300-01	XZ	-.301185+00	YZ	.916719-01
210 NODE	60	XX	.111457-02	YY	.250040-01	ZZ	.151321+00	XY	.413676-01	XZ	.440293+00	YZ	.859764-01
	61	XX	-.671612-01	YY	.556773-03	ZZ	-.146697-01	XY	-.529160-01	XZ	.463416+00	YZ	.109140-01
	161	XX	-.330271-02	YY	-.141606-01	ZZ	.154685-02	XY	.496951-02	XZ	.392157+00	YZ	.229488-01
	160	XX	.891156-01	YY	.716779-01	ZZ	.195764+00	XY	-.102028-01	XZ	.375142+00	YZ	.256334-02
	33	XX	-.599311-01	YY	-.592633-01	ZZ	-.429886-01	XY	.585734-01	XZ	-.417712+00	YZ	.866696-01
	34	XX	-.378667-01	YY	.692755-02	ZZ	-.246587-01	XY	-.343655-01	XZ	-.398969+00	YZ	.214267-01
	134	XX	.328416-01	YY	-.441602-02	ZZ	-.506837-02	XY	.783171-02	XZ	-.404650+00	YZ	.334615-01
	133	XX	.343327-01	YY	-.950472-02	ZZ	.453879-02	XY	-.734057-03	XZ	-.422906+00	YZ	-.187029-02
211 NODE	62	XX	-.356472-01	YY	-.179796+00	ZZ	-.679838+00	XY	.493289-01	XZ	-.687424+00	YZ	.374835+00
	63	XX	.524387+00	YY	.275727+00	ZZ	.569317+00	XY	.198115-02	XZ	-.755260+00	YZ	.452066+00
	163	XX	.205561+00	YY	.188474+00	ZZ	.435311+00	XY	-.241156-01	XZ	-.570728+00	YZ	.178779+00
	162	XX	-.395136+00	YY	-.357057+00	ZZ	-.856965+00	XY	-.158679-02	XZ	-.331712+00	YZ	.448849+00
	36	XX	-.118447+00	YY	.105990+00	ZZ	.552427-01	XY	.997615-01	XZ	.517180+00	YZ	-.386069+00
	37	XX	-.303850+00	YY	-.151151+00	ZZ	-.153964+00	XY	.860447-01	XZ	.503852+00	YZ	-.569534+00
	137	XX	.109632-02	YY	.208719-01	ZZ	.343569-02	XY	-.44 992-01	XZ	.511044+00	YZ	-.647931+00
	136	XX	.107891+00	YY	.177893+00	ZZ	.153662+00	XY	-.233160-01	XZ	.645205+00	YZ	-.164772+00
147	CENTROID	SXX	-.273183-02	SYY	.107563-01	SXY	-.533937-01						

```
                    VXX     -.172627-01   VYY     -.689156-02
          NODE 110          MXX      .424989-02   MYY      .123848-02   MXY     -.523301-02
          NODE 20           MXX      .100377-01   MYY      .519197-02   MXY     -.618250-02
          NODE 10           MXX     -.359692-02   MYY     -.375173-02   MXY     -.570775-02

158         CENTROID    SXX      .100276-02   SYY      .704521-02   SXY     -.175150-02
                        VXX      .590197-02   VYY      .250561-02
          NODE 20           MXX     -.325632-02   MYY     -.450315-02   MXY     -.431964-02
          NODE 110          MXX      .186409-02   MYY     -.125005-02   MXY     -.528119-02
          NODE 120          MXX     -.240470-02   MYY     -.113222-02   MXY     -.480291-02

159         CENTROID    SXX      .565699-03   SYY      .690098-02   SXY      .133485-02
                        VXX     -.118710-02   VYY      .263731-02
          NODE 121          MXX      .724980-03   MYY     -.187135-02   MXY     -.219772-02
          NODE 20           MXX      .352252-03   MYY     -.331238-02   MXY     -.431965-02
          NODE 120          MXX      .838039-03   MYY      .352531-03   MXY     -.325869-02

160         CENTROID    SXX     -.176264-02   SYY      .282433-02   SXY     -.108716-03
                        VXX     -.287788-02   VYY      .334500-02
          NODE 20           MXX      .702231-03   MYY     -.217397-02   MXY     -.275361-02
          NODE 121          MXX      .356144-02   MYY      .218884-02   MXY      .232942-03
          NODE 21           MXX      .508644-02   MYY     -.193676-02   MXY     -.126033-02

161         CENTROID    SXX     -.161565-02   SYY      .287284-02   SXY      .222838-0
                        VXX      .291550-02   VYY      .333929-02
          NODE 121          MXX      .334436-02   MYY      .211720-02   MXY      .232933-03
          NODE 39           MXX      .575045-03   MYY     -.219281-02   MXY      .329306-02
          NODE 21           MXX      .501357-02   MYY     -.192266-02   MXY      .176300-02

162         CENTROID    SXX      .175772-02   SYY      .731880-02   SXY     -.167314-02
                        VXX      .147405-02   VYY      .313569-02
          NODE 39           MXX      .158984-04   MYY     -.357862-02   MXY      .493511-02
          NODE 121          MXX      .958646-03   MYY     -.144447-02   MXY      .256867-02
          NODE 139          MXX      .691113-03   MYY      .907572-03   MXY      .375189-02

163         CENTROID    SXX      .137152-02   SYY      .719136-02   SXY      .251272-02
                        VXX     -.700643-02   VYY      .297523-02
          NODE 130          MXX      .216094-02   MYY     -.941057-03   MXY      .606347-02
          NODE 39           MXX     -.397279-02   MYY     -.489489-02   MXY      .493512-02
          NODE 139          MXX     -.292470-02   MYY     -.827081-03   MXY      .549929-02

164         CENTROID    SXX     -.269579-02   SYY      .100945-01   SXY      .547160-02
                        VXX      .179803-01   VYY     -.716643-02
          NODE 39           MXX      .100935-01   MYY      .549296-02   MXY      .683916-02
          NODE 130          MXX      .440362-02   MYY      .171872-02   MXY      .584757-02
          NODE 30           MXX     -.409132-02   MYY     -.397156-02   MXY      .634337-02
```

LMED

8