AD-A092 309 NAVAL POSTGRADUATE SCHOOL MONTEREY CA F/G 9/3
THERMAL ANALYSIS AND DESIGN OF AIR COOLED ELECTRONIC CIRCUIT BO--ETC(U
JUN 80 R A FOLTZ

UNCLASSIFIED NL

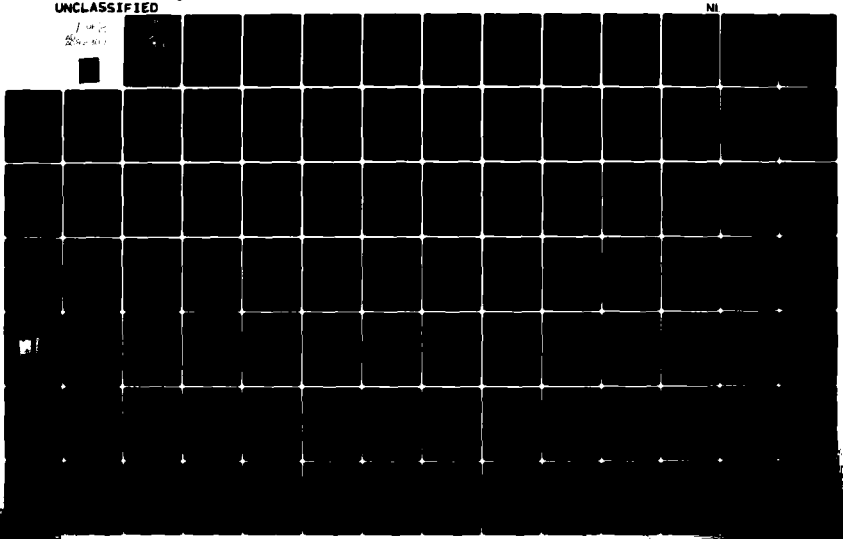

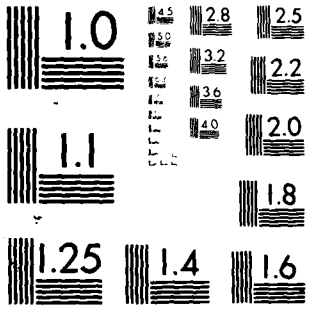

MICROCOPY RESOLUTION TEST CHART
NATIONAL BUREAU OF STANDARDS-1963-A

LEVEL II

(2)

NAVAL POSTGRADUATE SCHOOL

Monterey, California

AD A092309

DTIC
ELECTE
DEC 0 2 1980
S D
E

THESIS

THERMAL ANALYSIS AND DESIGN OF AIR COOLED
ELECTRONIC CIRCUIT BOARDS USING
A DESKTOP COMPUTER

by

Ricky Allen Foltz

June 1980

Thesis Advisor: Matthew D. Kelleher

Approved for public release; distribution unlimited

DDC FILE COPY

80 12 01 050

UNCLASSIFIED

SECURITY CLASSIFICATION OF THIS PAGE (When Data Entered)

REPORT DOCUMENTATION PAGE

READ INSTRUCTIONS BEFORE COMPLETING FORM

1. REPORT NUMBER

2. GOVT ACCESSION NO. AD-A092309

3. RECIPIENT'S CATALOG NUMBER

4. TITLE (and Subtitle) (6)
Thermal Analysis and Design of Air Cooled Electronic Circuit Boards Using a Desktop Computer.

5. TYPE OF REPORT & PERIOD COVERED
Engineer's Thesis, June 1980

6. PERFORMING ORG. REPORT NUMBER

7. AUTHOR(s) (10)
Ricky Allen Foltz (9)

8. CONTRACT OR GRANT NUMBER(s)
Master's thesis!

9. PERFORMING ORGANIZATION NAME AND ADDRESS
Naval Postgraduate School
Monterey, California 93940

10. PROGRAM ELEMENT, PROJECT, TASK AREA & WORK UNIT NUMBERS

11. CONTROLLING OFFICE NAME AND ADDRESS (11)
Naval Postgraduate School
Monterey, California 93940

12. REPORT DATE
Jun[redacted]80

13. NUMBER OF PAGES
135 pages

14. MONITORING AGENCY NAME & ADDRESS(if different from Controlling Office) (12)
Naval Postgraduate School
Monterey, California 93940

136

15. SECURITY CLASS. (of this report)
Unclassified

15a. DECLASSIFICATION/DOWNGRADING SCHEDULE

16. DISTRIBUTION STATEMENT (of this Report)
Approved for public release; distribution unlimited

17. DISTRIBUTION STATEMENT (of the abstract entered in Block 20, if different from Report)

18. SUPPLEMENTARY NOTES

19. KEY WORDS (Continue on reverse side if necessary and identify by block number)
Electronics cooling, interactive computer program, Thermal Network Analysis

20. ABSTRACT (Continue on reverse side if necessary and identify by block number)
A thermal design procedure for air cooled electronic circuit boards has been developed for the Hewlett-Packard Model 9845 desktop computer. The system of interactive programs, called THERMELEX, performs thermal analysis of printed circuit boards to predict either the junction temperatures for given power dissipation levels or the maximum power levels for given junction temperature limits. The system includes the following features: totally interactive with all input in question and answer format; simple data

DD FORM 1 JAN 73 1473 EDITION OF 1 NOV 65 IS OBSOLETE
S/N 0102-014-6601
(Page 1)

251450

UNCLASSIFIED

SECURITY CLASSIFICATION OF THIS PAGE (When Data Entered)

verification and correction capabilities; ability to store and retrieve circuit board descriptive data totally under program control; wide variety of output formats including tabular and graphical. By using internal selection of heat transfer correlations, the THERMELEX system depends only on input of physical parameters for thermal predictions.

Accession For
NTIS GRA&I ☒
DDC TAB ☐
Unannounced ☐
Justification
By
Distribution/
Availability Codes
Dist | Avail and/or special
A

Approved for public release; distribution unlimited.

Thermal Analysis and Design of Air Cooled Electronic Circuit Boards Using a Desk Top Computer

by

Ricky Allen Foltz
Lieutenant Commander, United States Navy
B.S., Stanford University, 1971

Submitted in partial fulfillment of the
requirements for the degree of

MASTER OF SCIENCE IN MECHANICAL ENGINEERING
and
MECHANICAL ENGINEER

from the

NAVAL POSTGRADUATE SCHOOL
June 1980

Author _____ Ricky A. Foltz

Approved by: _____ Matthew D. Kelleher
Thesis Advisor

_____ P.J. Marto
Chairman, Department of Mechanical Engineering

_____ William M. Tolles
Dean of Science and Engineering

ABSTRACT

A thermal design procedure for air cooled electronic circuit boards has been developed for the Hewlett-Packard Model 9845 desktop computer. The system of interactive programs, called THERMELEX, performs thermal analysis of printed circuit boards to predict either the junction temperatures for given power dissipation levels or the maximum power levels for given junction temperature limits. The system includes the following features: totally interactive with all input in question and answer format, simple data verification and correction capabilities, ability to store and retrieve circuit board descriptive data totally under program control, wide variety of output formats including tabular and graphical. By using internal selection of heat transfer correlations, the THERMELEX system depends only on input of physical parameters for thermal predictions.

TABLE OF CONTENTS

I. INTRODUCTION ----------13

A. BACKGROUND ----------13
B. OBJECTIVES ----------17

II. DESCRIPTION OF THE THERMELEX SYSTEM ----------19

A. GENERAL ----------19

1. The Computer ----------19
2. The THERMELEX System ----------21

B. AUTOST ----------22

1. General ----------22
2. Instructions ----------23
3. Special Function Keys ----------23
4. Option List ----------24
5. The Copy Option ----------24

C. BOARDS ----------24

1. General ----------24
2. Checking of INPUT DATA ----------25
3. Correction of INPUT DATA ----------25
4. The Circuit Board ----------26
5. The Components ----------27
6. Thermal Conduction Paths ----------27
7. Temperature at Power Input ----------29
8. Storage of DATA ----------29

D. THERML ----------30

1. General ----------30
2. Air Flow-Thermal Model ----------31
3. Components-Thermal Model ----------33
4. The Circuit Board-Thermal Model ----------40
5. The Analysis of the Thermal Model ----------45
6. What Now? Option List ----------48
7. Sensitivity Analysis ----------48

III. RESULTS AND CONCLUSIONS ----------50

IV. RECOMMENDATIONS FOR FUTURE WORK ----------52

V. FIGURES ----------54

APPENDIX A: USER Instructions as Provided by THERMELEX --70

APPENDIX B: AUTO ST Computer Program ----------78

APPENDIX C: BOARDS Computer Program ----------94

APPENDIX D: THERML Computer Program ----------117

BIBLIOGRAPHY ----------133

INITIAL DISTRIBUTION LIST ----------135

LIST OF FIGURES

1. The Hewlett-Packard 9845 Desktop Computer---------- 54

2. The Keyboard---------- 55

3. General Purpose Key Code Overlay---------- 56

4. Alternate Region Definition for Single Circuit Board---------- 57

5. Component Definition Key Code Overlay---------- 58

6. Graphis Dump of Circuit Board---------- 59

7. Data List of Circuit Board---------- 60

8. Thermal Network of Components and Circuit Board----- 61

9. Dip Mounting on Circuit Board---------- 62

10. Thermal Network of the Base Circuit Board---------- 63

11. Final OUTPUT DATA from THERML (Temperature Solution)---------- 64

12. Intermediate OUTPUT Data from THERML ----------65

13. Final Output Data from THERML (Power Solution)------ 66

14. Sensitivity Plot: TJUNC vs Air Flow---------- 67

15. Sensitivity Plot: Power vs Air Flow---------- 68

16. Comparison of THERMELEX Predicted Case Temperatures with Experimental Results from Ref. 14----------69

NONMENCLATURE

Aair	Average area for cooling air flow	[m^2]
Agap	Area of bottom of component	[m^2]
Rl	Area for conduction in either a CPU or a circuit board lead	[m^2]
Apara	Area of the component experiencing parallel flow	[m^2]
Areg	Area of the region on the circuit board	[m^2]
Aspin	Surface area of the component lead	[m^2]
Astag	Area of the component experiencing stagnation flow	[m^2]
Axpin	Crossectional area of the component lead	[m^2]
Bdh	Height of circuit board (perpendicular to air flow)	[m^2]
Bdl	Length of circuit board (parallel to air flow)	[m^2]
Cpair	Heat capacity of the air	[J/Kg-degK]
CPU	Conduction Path Unit (size defined by user)	
Dgap	Distance between the component bottom and the circuit board	[m^2]
Dh	Hydraulic diameter	[m^2]
DIP	Dual Inline Package	
Epsb	Emissivity of the circuit board	
Epse	Emissivity of the component	
Fair	Volumetric air flow rate	[m^3/sec]

Fr	Roughness factor	
Gnu	Kinematic viscosity of air	[m^2/sec]
Gz	Graetz number	
Havg	Average height of the components present on the board	[m]
Hb	Heat transfer coefficient for the circuit board	[Watt/m^2-degK]
Hduct	Heat transfer coefficient for the duct formed by the circuit boards and equipment case	[Watt/m^2-degK]
He	Height of the component	[m]
Hpara	Heat transfer coefficient for areas receiving parallel air flow	[Watt/m^2-degK]
Hr	Dimension of region in the vertical direction or vertical distance between finite difference nodes	[m]
Hstag	Heat transfer coefficient for areas receiving stagnation air flow	[Watt/m^2-degK]
Kair	Thermal conductivity of cooling air	[Watt/m-degK]
Kb	Thermal conductivity of the circuit board	[Watt/m-degK]
Kl	Thermal conductivity of the board leads	[Watt/m-degK]
Kpin	Thermal conductivity of the component lead	[Watt/m-degK]
Le	Length of the component	[m]
Lpin	Length of component lead	[m]
Lr	Dimension of region in the horizontal direction or horizontal distance between nodes	[m]
Mair	Mass flow rate of cooling air	[Kg/sec]
Navg	Average number of component in a vertical column perpendicular to the air flow direction	

Npin	Number of leads on a component	
Nxr	Number of regions in the air flow of horizontal direction	
Nyr	Number of regions perpendicular to the air flow direction or vertical direction	
Perim	Wetted perimeter of the air duct	[m]
Pow	Energy dissipated in the component	[Watts]
Pr	Prandtl number	
Q	Rate of heat transfer	[Watts]
Oe-b	Total rate of heat transfer from the component to the circuit board	[Watts]
Q_1	Total rate of heat transfer out the bottom of a circuit board region	[Watts]
Q_2	Total rate of heat transfer out the right side of a circuit board region	[Watts]
Q_3	Total rate of heat transfer out the top of a circuit board region	[Watts]
Q_4	Total rate of heat transfer out the left side of a circuit board region	[Watts]
R	Thermal resistance for heat transfer	[deg K/Watt]
Re	Reynolds number	
Rb-con	Total thermal resistance for convection from circuit board surface to the cooling air flow	[degK/Watt]
Rb-hor	Thermal resistance for conduction in the circuit board between nodes in the horizontal direction	[degK/Watt]
Rb-ver	Thermal resistance for conduction in the circuit board between nodes in the vertical direction	[degK/Watt]
Re-conv	Total thermal resistance for convection from component surface to the cooling air flow	[degK/Watt]

Rgap-cond	Conductive thermal resistance for the air gap between the component bottom and the circuit board	[degK/Watt]
Rgap-rad	Effective thermal resistance for radiation from the component bottom to the circuit board	[degK/Watt]
Rl	Total conductive resistance between finite difference nodes (centers of region)	[degK/Watt]
Rpara	Thermal resistance for heat transfer from area receiving parallel air flow	[degK/Watt]
Rstag	Thermal resistance for heat transfer from area receiving stagnation air flow	[degK/Watt]
Rtop-r	Effective thermal resistance for radiation from the top of the component to next board	[degK/Watt]
Rtote-b	Total thermal resistance between the component bottom and the circuit board	[degK/Watt]
Tair	Local air temperature	[degC, degK]
Te	Temperature of the component surface	[degC, degK]
Tb	Temperature of the board surface	[degC, degK]
Thb	Thickness of the circuit board	[m]
Tj	Temperature of the component junction	[degC, degK]
Vair	Velocity of the cooling air	[m/sec]
Wavg	Average width of the components present on the board	[m]
We	Width of the individual components	[m]
X	Direction parallel to cooling air flow also referred to as the horizontal direction due to orientation of circuit board picture on screen of computer	

Xi	Distance from the entrance of the cooling air	[m]
Y	Direction perpendicular to cooling air flow also referred to as the vertical direction due to orientation of circuit board picture on screen of computer	
Zb	Distance between circuit boards	[m , mm]

I. INTRODUCTION

A. BACKGROUND

Electronic components generally convert a significant fraction of the input power into internal joulian heating. When the components are large, widely separated, and air is permitted to circulate freely among them, this heat generated within the component is transferred to the environment through natural convection. Indeed, millions of pieces of home electronic equipment have operated reliably for years depending only on natural circulation for cooling. The major emphasis over the last 15 years has been a continuing effort toward a reduction in physical size of components and increased component density within electronic equipment. The military is particularly in need of smaller, more complex, yet reliable equipment that must often be sealed from an extremely hostile environment. This results in the need for more efficient cooling methods.

The age of large scale integration (LSI) is here. Although the power dissipated in each active junction within a component has greatly decreased, the large number of heat sources on each chip has created serious heat removal problems. There is a genuine need for electronic designers to not only be aware of the problems associated with higher

temperatures, but they must also be prepared to solve those problems. References [1] through [10] are a sampling of the many sources that indicate the increased emphasis on cooling problems throughout the electronics community.

The need to operate electronic equipment with maximum junction temperatures below those levels that result in failure is well recognized, but even moderately high temperatures in electronic components result in progressive deterioration and reduced reliability. A generally accepted thumb rule is: for every 10 deg C increase in junction temperature, the lifetime of a component will decrease by one-half. [3, 7] The increasing costs associated with each failure make it imperative to address reliability during the equipment design phase and to provide sufficient cooling to maintain temperatures as low as practical.

There are many methods of removing the heat dissipated within electronic components. These methods include the natural air convection previously mentioned, thermo-electric devices, heat pipes, cold plates and even complex refrigeration systems which use pumped liquid coolants [8]. The complex systems required for these solutions can lead to lower reliability through increased probability of failures in the cooling system. While many of these methods can allow extremely high power densities for specific applications, the most widely used method for cooling of components

mounted on printed circuit boards is forced air cooling. Air is readily available, abundant, non-corrosive, non-toxic, non-flammable, dielectric, and is easily pumped using readily available fans and blowers. For those situations where there is a need to seal the equipment, interior cooling air is often circulated through heat exchangers.

All too often the problem of cooling the electronic components is attacked after the circuit boards have been designed or even produced and assembled [9]. In some cases, the need for increased cooling is recognized only after repeated failures in service have resulted in unhappy users and excessive repair costs. At best both the electronic design and the thermal design progress concurrently but are worked on by separate design groups. These groups may have conflicting range goals that can interfere with the important long range goal of reliability.

Many of the efforts to directly involve the electrical designer in the thermal problems are directed towards overall system cooling. Reference [11] details a thermal design program called VENTBOX. VENTBOX treats a cabinet enclosure with entire circuit boards modeled as distributed heat sources. This program fails to address the problems of individual components and, therefore, is unable to analyze the circuit board.

Electronic circuit analysis programs are often utilized in the thermal analysis of circuit boards [12 and 13]. This

technique requires the development of an equivalent thermal circuit, usually by a packaging engineer, and thus the thermal design is removed from the hands of the electronic designer. Reference [14] details a thermal analysis program for circuit boards that is much more accessible to an electronic designer since the inputs are physical dimensions and types of components rather than equivalent thermal network parameters.

All these programs share a major weakness in that they depend on a large general purpose computer facility. This not only can result in excessively long turn-around times in batch processing, but also the expense of computer time may become a factor. In addition, the input data typically consists of long lists of numbers that must be in the proper format with the correct option selection codes. Likewise the output also consists of even longer lists of numbers with the key information hidden in their midst.

One solution to automated thermal design and analysis of avionics systems is being developed as a joint project by the Air Force Flight Dynamics Laboratory at Wright Patterson Air Force Base and Boeing Aerospace Company. The ITAD (Integrated Thermal Avionics Design) system is expected to include many existing analysis programs and a large ever growing data base containing reliability parameters. It is anticipated that ITAD will be accessed by user through both batch methods and interactively through color graphics

terminals. The scope of this project is enormous and the benefits to the system designer will be many, provided he has access to the large computer at Wright Patterson Air Force Base [15, 16].

Another solution on a much smaller scale is to create a program for a compact, stand alone desktop computer that is easily accessible to the designer of electronic circuit boards. Such a system, if interactive and "friendly" to the casual user, would allow rapid evaluation of various circuit board designs at the conceptual level. Rejection of those designs with poor thermal characteristics could then occur before they leave the drafting table saving both future efforts and dollars.

B. OBJECTIVES

The main objective of this thesis was to develop an interactive thermal analysis program utilizing the Hewlett-Packard 9845 desktop computer. It was considered important to include the following features:

1. Simplicity of operation: All data input and control of program flow are done in a question and answer format including specific instructions with each question.

2. Graphical data checking: Display circuit board replicas on the screen both for verification of input and to provide a more useful form of output.

3. Data correction capabilities: Use interactive methods to allow correction of portions of the data without the need to repeat all the input.

4. Automatic storage and retrival of data: Circuit board descriptions should be written to and read from mass storage devices using simple questions and answers rather than requiring specific knowledge of operations of the devices.

5. Analysis methods hidden: Various empirical heat transfer correlations should be used based on the physical descriptions and the user should be relieved of the need to make decisions concerning the details of the heat transfer analysis methods.

6. Sensitivity analysis: Allow automatic parameter changes to investigate the effects on the thermal performance of these changes with plotted data.

II. DESCRIPTION OF THE THERMELEX SYSTEM

A. GENERAL

1. The Computer

The name THERMELEX will be used to refer to the system of interactive programs created to perform thermal analysis of air cooled electronic circuit boards. The programs are written for the Hewlett-Packard Model 9845 desktop computer using the Hewlett-Packard extended version of the basic language. A sophisticated operating system hides the complexity of the 9845 from the user and provides protection from his mistakes yet provides the power and flexibility needed for application programs such as the THERMELEX system.

The computer used to create and debug THERMELEX is the 9845A with 64 k bytes of read/write memory (option 203), internal printer (option 500) and graphics package. In addition, dual tape drives and dual floppy disks were utilized in the development of the system. These additional mass storage devices provided considerable increase in the convenience and speed of storage and retrieval operations but THERMELEX is designed to operate with only the standard tape drive. Recent advances in the internal electronics have resulted in this model being superseded by the 9845B model with larger memory capabilities and several other features.

THERMELEX is available in either an A-version or B-version for use in the respective model of the 9845.

Figure 1 shows the 9845A but the 9845B is identical in physical appearance except for the name tag. The screen at the top will display the messages from the system to the user, what is typed by the user and the output from the THERMELEX programs. This output may be printed on the screen in what is known as the alpha mode or it may be presented as pictures and words from the graphics mode. Output of either mode may also be produced on the thermal printer above the keyboard in the inclined area. Directly underneath the screen there are four pull-out reference cards that explain error messages and other operating conditions that may occur. At the extreme upper right corner of the sloping section is the standard tape transport (:T15) for mass storage of programs and data.

The keyboard contains not only a set of standard typewriter keys but also several other groups of keys that are important to THERMELEX. The numeric keys at the lower right allow easy entry of numbers as an alternative to those in the alphanumeric group of keys and allows numeric calculations to be performed even during execution. Between these groups are the gold colored program control keys. All responses to questions are followed by pressing the CONT key at the bottom of this column of keys. The group of special

function keys in the upper right are defineable by the user or from program control. They are also used in THERMELEX as priority interrupts to simplify the input of data. This use of these keys is further explained later. The final key of interest to the THERMELEX system user is the AUTOST key in the lower right corner of the EDIT/SYSTEM FUNCTIONS group. This key allows automatic loading and execution of the first program in the THERMELEX system. Explanation for its use is found in Appendix 1, the User Instructions. For further explanations of the features of the Hewlett-Packard model 9845 computer, see Ref [17] supplied with the computer.

2. THERMELEX System

Due to the memory limitations of the 9845A, THERMELEX is divided into three major programs which are generally brought into case from mass storage under program control as they are needed. However, each program is designed to stand alone which can allow the experienced user to bypass some of the questions and answers required to help the inexperienced users. AUTOST is the first program of the three; here several pages of user instructions (see Appendix 1) may be printed, the special function keys are defined and the user is directed along a path to follow towards the other programs. In BOARDS, the circuit board descriptive data is entered, verified and stored on any one of the mass storage devices. The user may also elect to produce a printed copy of the input data for

his records. The THERML program performs the thermal analysis and provides output in various tabular or graphical forms. These three major programs will be described in more detail in the pages that follow.

There are also several smaller files in the system. BDSKEY and STDKEY alter the definitions of the special function keys. TNAMES contains a listing of all variable names and program section names with explanations to aid in any future modifications of the THERMELEX system. DEMO-P and DEMO-T are data files containing example circuit board descriptive data to allow demonstrations of the system and to help the new user become familiar with the capabilities.

B. AUTOST

1. General

AUTOST is the driver program for the system. This name allows the program to be automatically loaded and executed if the AUTOST key is latched down and if the tape containing the THERMELEX system is in the standard right-hand tape drive (:T15) when the main power switch is turned on. Regardless of how the program is loaded, the first question will be concerning the location of THERMELEX. The program will ask which mass storage device contains the system since this is necessary for correct program control. At this point, the program defines the default mass storage device using the "MASS STORAGE IS "---" command, and the

default mass storage device should not be altered while using THERMELEX.

2. Instructions

AUTOST will provide a printed set of user instructions either on the screen in short segments or on the thermal printer in 8.5 by 11 inch pages. These instructions present an overall system view and are intended to familiarize the inexperienced user and supplement the extensive instructions and prompts that are presented on the screen in all sections of THERMELEX.

3. Special Function Keys

AUTOST redefines the special function keys as required for the system and can provide a paper key-code overlay as a substitute for the plastic model (Hp Part #7120-6164). Figure 3 shows both styles. The paper style may be used as a guide for filling in the appropriate blanks on the plastic version.

4. Option List

Finally, AUTOST provides a list of options for the user to select from. He may load either of the other two programs in THERMELEX or produce a complete copy of the programs in the system through selection of the appropriate number from the menu of options. This technique is employed throughout the system whenever possible because of the simplicity involved in entering a single number over other methods of option selection.

5. The Copy Option

The copy option is included as a built-in feature since there are many separate files in THERMELEX and a separate command is required for each file to be copied. Any mass storage device may serve as the destination for the system; however, when copying to tape, it is suggested that it be blank due to the number of open blocks required. Following completion of this option, program control returns to option list. It is expected that the first option (keyboard entry of circuit board description) is the most likely to be used and the description that follows assumes this path.

C. BOARDS

1. General

The major purpose of the BOARDS program in the THERMELEX system is to provide a simple method for input of the descriptive data needed in THERML for the creation of the thermal model and the analysis. This data includes the geometric and material properties of the circuit board as well as what components are on the circuit board. These components are limited to DIP's (Dual Inline Packages) and chip carriers (FLAT Packs). The thermal model used for the analysis of the board is a finite difference scheme and the physical location of the components is approximated by the locations of the finite regions created by the user.

The descriptive data may be entered from the keyboard in response to simple questions; or, it may be retrieved from mass storage data files previously recorded using BOARDS. The instructions included as Appendix 1 provide specific explanations of how to use this program.

2. Checking of Input Data

All input data is displayed using either the graphics capabilities of the 9845 or with printed lists produced on the screen or paper. The user may, therefore, easily verify the validity of the data he has entered. This feature is included whenever possible throughout THERMELEX.

3. Correction of Input Data

There are many opportunities to change the descriptive data using the same question and answer format of interactive programming. At no time is it necessary for the user to have extensive knowledge of the program's internal workings or the machine level commands performed within the program. As a further means of correcting past errors, the backup feature built into the THERMELEX system makes it extremely easy to return to previous questions. This feature is accessed by depressing the special function key (Ko) in place of a response to a request for input. Program control will jump back to the previous question to allow re-entry of data. Repeated use of Ko allows backing up to any desired point and resumption of program flow from that point.

4. The Circuit Board

To describe the geometry of the circuit board under investigation, the user must enter the length, width, thickness and the thermal conductivity of the circuit board. With no input, the thermal conductivity will be assigned a default value of 0.29 Watts/m-degC, a representative value for the bonded glass laminates generally used for construction of circuit boards. The length parameter is defined to be in the direction of air flow regardless of which dimension is the largest.

In order to create the finite difference thermal model, the board must be divided into logical regions by placing any number of equally spaced vertical lines and any number of equally spaced horizontal lines on the board up to a total of 50 regions. More regions would be possible in the 9845B due to the larger memory capacity but this would require some program changes. Each region will either contain a component assumed to be centered in the region or will be empty. Since there may be regions with no components, there is no unique set of descriptive data for a given circuit board design. The user is encouraged to try different combinations of horizontal or x regions and vertical or y regions to describe a circuit board. Figure 4 shows two such possibilities for a board with six 14 pin DIP's. Both the six region model and the 42 region model describe the same board. Experience is helpful in making decisions as

to how to divide the board and some boards may not fit into the constraints imposed by THERMELEX, but many will.

5. The Components

Each of the defined regions will be empty or contain one of the following components: 14, 16, 24, 40 pin DIP's with either vertical or horizontal orientation and 16, 24, 40, 64 pin chip carriers. These components will be assured to be centered in the region (with the exception of the 40 pin DIP which will be assumed to occupy two regions). The input of component type for each region is via the special function keys. A special paper key-code overlay for use in this component input section may be provided if a plastic version is not available, see Figure 5. As a flashing cross appears in each of the regions, the appropriate special function key is depressed. This defines the type of component, length, width, orientation and draws the component on the screen for visual verification of corrections. After all regions have been defined, corrections are possible through removal and replacement of components using the same special function keys.

6. Thermal Conduction Paths

Each of the defined regions on the board may exchange energy with the adjacent regions via conduction through the board itself and any thermally conductive material added to the board such as electrical leads. In addition, many circuit

board designs involve metal conduction rails that provide both mechanical support and a method to transport the heat from the componets. There are provisions in BOARDS to model either the electrical leads or the conduction rails. For circuit boards without conduction rails, the user specifies the average lead width (mm), thickness and thermal conductivity of the lead material. These geometric parameters are used to determine the thermal resistance of a single lead connecting the region centers or nodes.

When conduction rails are included on the circuit board, the effects of the electrical leads are ignored. To allow modeling of rails that may have different widths, the concept of a conduction path unit (CPU) is introduced. A CPU is defined to be .1 mm in width but the user specifies the thickness and conductivity of the material. These parameters are used to determine the thermal resistance of a single CPU connecting the region centers.

With the thermal resistance of single CPU or electrical lead determined, the user need only specify the number of such resistances that connect the circuit board regions. For example, if a conduction rail is 5.8 mm in width, it may be modeled as containing 58 CPUs. While the concept of CPUs is totally artificial, this concept does allow modeling of the Navy Standard Electronic Module (SEM) and Improved Standard Electronic Module (ISEM) for those situations when these modules are used in forced air cooled systems.

With the physical description of the circuit board now complete, the user may elect to produce a picture of the circuit board from a dump of the graphics to the internal printer. Pressing special function Key 3 will produce a picture such as Figure 6. This picture may be used as a final verification of the validity of the circuit board description that has been entered. The remaining descriptive data to be entered concerns the component parameters.

7. Temperature or Power Input

The user must specify either the average power to be dissipated in each component or the maximum junction temperature. When power levels are specified, the steady state junction temperatures will be calculated in THERML. When junction temperatures are specified, the maximum allowable component power levels will be calculated. In either case, the user must also specify a case to junction thermal resistance for each component. This is usually supplied by the manufacturer and provides the means in the thermal model to link the component power level and junction temperature to the case surface temperature. Figure 7 shows the data summary sheet provided after the data has been entered and verified.

8. Storage of Data

Although it is possible to load THERML and perform the thermal analysis directly since all data is passed

through a common block, it is strongly urged that the circuit board description be stored on mass storage. A few simple answers allows the storage to tape or disk for retrieval at a later time. This data file may be accessed, verified, altered and recorded back to mass storage using BOARDS to investigate the effects that changes in design have on the temperatures or power levels obtained in THERML. Both Appendix 1 and the program provide easy to follow instructions for retrieval of previously recorded descriptive data files.

Totally under program control, the third major program in the THERMELEX system, THERML will be loaded at the direction of the user and execution started at the proper entry point.

D. THERML

1. General

Recall from the previous discussion that BOARDS establishes all the parameters that describe the circuit board. While the major purpose of THERML is to analyze the thermal performance, it must first establish the parameters that describe how the circuit board is installed and cooled, such as the spacing between boards, volumetric air flow per board and inlet temperature of the cooling air. Using the total set of board and installation parameters, the thermal model is set up, solved and the results presented.

The approach taken in the thermal analysis is to construct an approximate thermal network [7] for every path

of heat transfer from the components and the circuit board. The thermal resistance (R) for each path is calculated from the set of parameters and if a temperature difference (ΔT) for that path is known, the expression:

$$Q = \frac{\Delta T}{R}$$

will determine the rate of heat transfer (Q) for that path. When the rate of heat for a given path is known, the expression:

$$\Delta T = (Q) \times (R)$$

will determine the temperature difference.

An overall heat balance for the components and the circuit board, with all the heat that is generated going into the cooling air stream, is used to determine either the steady state junction temperatures (when component power levels are specified) or the component power levels (when the junction temperatures are specified).

2. Air Flow - Thermal Model

The cooling air flow is assumed to come from an infinite heat sink which supplies air at a constant inlet temperature. All the heat dissipated within the components is assumed to enter the air stream with no heat conducted into the card guides or electrical connectors. These guides and the mechanical support sections of the connectors are typically made of plastic with high resistance to heat transfer and this assumption leads to conservative estimates.

As the air travels from inlet to outlet, it is assumed to remove heat from both the component surfaces and the surface of the circuit board. It is further assumed to travel in air lanes defined by the height of each region perpendicular to air flow and not mix until the outlet. As the air removes heat from each region, the local air temperature (Tair) will increase. The process is described by the general equation:

$$\text{Tair at } X + \Delta X = \text{Tair at } X + \frac{\text{Q added in } \Delta X}{(\text{Mair}) \times (\text{Cpair})}$$

where Mair = Mass flow rate of air [kg/sec]

Cpair = Heat capacity of air [J/kg-degk]

ΔX = length of a region in the air flow direction

This process results in the temperature of the cooling air stream being modeled as a series of steps as the air travels from inlet to outlet within an air flow lane. The local air temperature and the convective resistance determine the local convective heat transfer.

The air velocity is determined from the physical description entered by the user and this air velocity is used to determine the convective resistances. Recall that circuit board spacing (Zb), board height (Hb) and volumetric air flow rate (Fair) are part of the descriptive data set previously entered. With no components present, the air velocity (Vair) would be defined by:

$$\text{Vair} = \frac{\text{Fair}}{(\text{Zb}) \times (\text{Hb})}$$

However, the components tend to reduce the air flow area (Aair) by blockage. The average blockage area is determined by calculating the average number of components in a vertical column of regions perpendicular to the air flow. In addition, the average width (Wavg) and height (Havg) of the components is determined and the average air flow area calculated using:

$$Aair = (Zb) \times (Hb) - (Navg) \times (Havg) \times (Wavg)$$

This area is used to determine the air velocity from:

$$Vair = \frac{Fair}{Aair}$$

In addition the average area is used to determine the wetted perimenter (Perim) of the air duct formed by the boards according to:

$$Perim = 2Hb + 2Zb + 2\ (Navg) \times (Havg)$$

The hydraulic diameter (Dh) is therefore:

$$Dh = \frac{4\ Aair}{Perim}$$

which is also used in calculations of some of the heat transfer coefficients.

3. Components - Thermal Model

All heat generated within the components must be transferred away through conduction to the board, radiation to the board and to some radiation sink, and through convection to the cooling air. Figure 8 shows each of the thermal networks for heat transfer.

DIP components are usually mounted by soldering the electrical leads to the circuit board electrical conductors (Figure 9). These connector pins also act as low resistance thermal conductors between the component and the circuit board. The total thermal resistance from the component to the circuit board may be calculated from the cross sectional area of each pin (Axpin), the length of the pin (Lpin), the thermal conductivity of the pin material (Kpin) and the number of pins (Npin) using the expression:

$$Rpin = \frac{Lpin}{(Kpin) \times (Apin) \times (Npin)}$$

There is also a small gap between the bottom of the component case and the circuit board. Figure 9 shows the mounting for DIP cases where this gap is on the order of one mm; for chip carriers, this distance is smaller yet. Due to the small distance (Dgap) involved, it is assumed that no convection occurs in this gap and that the conductive resistance of the air gap (Rgap-cond) may be calculated from the expression:

$$Rgap\text{-}cond = \frac{Dgap}{(Kair) \times (Agap)}$$

where Agap represents the surface area of the bottom of the component and Kair represents the thermal conductivity of the air.

The component case will also radiate energy to the circuit board. Assuming the gap to act as two parallel

plates of equal areas with emissivities of Epsb and Epse, the heat transfer rate may be calculated (Ref [18]) from:

$$Q = \frac{(Sig) \times (Agap) \times (Te^4 - Tb^4)}{\frac{1}{Epsb} + \frac{1}{Epse} - 1}$$

where:

Sig = Stefan-Boltzman constant

$$(5.67 \times 10^{-8} \frac{Watts}{m^2 - degK^4}$$

Te = Component surface Temperature (degK)

Tb = Circuit board Temperature (degK)

This radiation term may be simplified by expanding $(Te^4 - Tb^4)$ in a Taylor series about Te and retaining only the linear portion of the series. When this is done, an effective gap radiation resistance (Rgap-rad) may be calculated from:

$$Rgap\text{-}rad = \frac{Epse + Epsb - (Epse)(Epsb)}{(r) \times (Sig) \times (Epse) \times (Epsb) \times (Te^3)}$$

Since the component case temperature (Te) is an unknown, this resistance will be recalculated as the solution progresses.

These three resistances (Rpin, Rgap-cond, Rgap-rad) may be combined into a total resistance between the component and the circuit board (Rtote-b). When the component is a chip carrier, the air gap and lead length are assumed to be one-tenth that of the DIP case [13].

Although the radiation heat loss from the component is extremely small and normally neglected in thermal analysis of electronic circuit boards, it is included here for completeness.

The component will radiate to the other components and the back of the adjacent circuit board. For the purposes of the thermal model under discussion, it is assumed that radiation is from the top of the component to the adjacent board and that this adjacent board temperature is the same as the board temperature below the component. It is further assumed that the area of the circuit board is much greater than that of the component. Using the same linearization technique previously discussed results in the expression:

$$Rtop\text{-}r = \frac{1 - Epse}{(4) \times (Sig) \times (Epse) \times (Ae) \times (Te^3)}$$

for the effective thermal resistance for radiation from the top of the component to the adjacent circuit board.

Convection heat transfer to the air, the final heat loss path from the component, depends on the heat transfer coefficient and the area for that mode of heat transfer. The component is assumed to experience two separate modes of convection. Those portions of the component that are perpendicular to the air stream are assumed to experience a stagnation form of air flow while the top and sides see parallel air flow. Recall that air flow is defined as being from left to right as required for data entry in the <u>BOARDS</u> program. When component types are entered as being horizontal or vertical using the special function keys, the component length (Le) and width (We) parameters are set such that Le is along the air flow direction and We is perpendicular to

the air flow. The standard correlation for plane stagnation flow may be written as: Ref [19]

$$Hstag = (.57) \times (Kair) \times (Pr^{.4}) \times \left(\frac{Vair}{(We) \times (Gnu)}\right)^{\frac{1}{2}}$$

where Hstag = Heat transfer coefficient for areas receiving stagnation air flow

Pr = Prandtl number for air

Gnu = Kinematic viscosity for air

Using the component height (He), the area for stagnation heat flow (Astag) may be calculated from:

$$Astag = (2) \times (We) \times (He)$$

The portions of the component that are parallel to the air flow (top and sides) are assumed to experience the same heat transfer coefficient that would occur in a smooth duct modified by a roughness factor (Fr) to account for the presence of the components acting to increase this heat transfer coefficient (Hpara). Hpara depends on the Reynolds number (Re) determined by:

$$Re = \frac{(Vair) \times (Dh)}{Gnu}$$

In the entrance region of the duct formed by the circuit boards, up to a distance of approximately ten hydraulic diameters, the flow is assumed to be laminar. Reference [20] contains the following correlation for the heat transfer

coefficient in the entrance region of a smooth duct:

$$Hduct = \frac{(.664) \times (Kair)}{(1.1) \times (Dh)} \left[\frac{(Gz) \times (1+(7.3) \times (\frac{Pr}{Gz})^{1/2}}{Pr} \right]^{1/2}$$

where Gz is the Graetz number defined as:

$$Gz = \frac{(Re) \times (Pr) \times (Dh)}{Xi}$$

and Xi is the distance from the entrance of the cooling air flow.

The value of the heat transfer coefficient predicted from the above equation has been found to be low from comparisons to experimental data of Ref [12] and Ref [14]. The expression:

$$Fr = 1 + \frac{5 \times (Perim - (2) \times (Bdh) - (2) \times (Zb))}{Perim}$$

has been created to adjust the predicted heat transfer coefficient for the rough duct. The expression reduces to one when no components are present and is less than two for all reasonable board constructions. The resulting heat transfer coefficient that is used for the parallel sides (Hpara) is therefore:

$$Hpara = (Hduct) \times (Fr)$$

For positions beyond the entrance length the flow may be laminar or turbulent and the appropriate heat transfer correlation must be chosen. The transition from laminar to turbulent is assumed to occur at a Reynolds number of 1000

since the components act as turbulence promoters for the air flow. For laminar flow, the expression:

$$Hduct = \frac{(5.4) \times (Kair)}{Dh}$$

is used and the result modified with the roughness factor (Fr) to obtain Hpara. For turbulent flow the Dittus-Boelter relationship is used:

$$Hpara = \frac{(.023) \times (Re^{.8}) \times (Pr^{.4}) \times (Kair)}{Dh}$$

Heat is convected not only off the top and sides of the components but also from the surface of the leads or pins. Since the thermal conductivity of the pin material is so high, their surface is assumed to have the same temperatures as the surface of the component. The effective component parallel side area for heat transfer is, therefore, determined from:

$$Apara = (Le) \times (We) + 2(Le) \times (He) + (Aspin) \times (Npin)$$

where Aspin is the surface area of the pins that experience parallel air flow. The thermal resistances for convection from the component may then be calculated from:

$$Rpara = \frac{1}{(Hpara) \times (Apara)} \qquad \text{and,}$$

$$Rstag = \frac{1}{(Hstag) \times (Astag)}$$

These two resistances may then be combined as parallel resistances to give a total convective thermal resistance from the component to the air (Re-conv) of

$$\text{Re-conv} = \frac{(\text{Rpara}) \times (\text{Rstag})}{(\text{Rpara}) + (\text{Rstag})}$$

Returning now to the basic premise that all the heat produced within the component must be transferred through one of the heat paths illustrated in Figure 8, the heat balance equation for the Ith component is:

$$\text{Pow (I)} = \text{Qto board} + \text{Qto air} + \text{Qrad off top}$$

utilizing the general expression for heat flow as a function of temperature difference. This may be expressed as:

$$\text{Pow (I)} = \frac{\text{Te(I)} - \text{Tb(I)}}{\text{RToTe-b(I)}} + \frac{\text{Te(I)} - \text{Tair(I)}}{\text{Re-conv(I)}} + \frac{\text{Te(I)} - \text{Tb(I)}}{\text{Rtop} - \text{R(I)}}$$

This expression may be rearranged and solved for the component temperature (Te). The resulting expression is used to eliminate Te from the final set of equations that are solved for the set of board temperatures.

4. <u>The Circuit Board - Thermal Model</u>

The circuit board has been divided into regions as determined by the user while entering the circuit board description in program <u>BOARDS</u>. Each of the regions will lose or gain heat by the normal processes of conduction,

convection and radiation. In this thermal model, radiation from the circuit board regions is neglected due to the lower temperatures of the circuit boards. The board temperature (Tb) is assumed to be uniform within a given region for purposes of convective heat transfer to the cooling air stream. For purposes of calculating the heat conducted between regions, the temperature differences are assumed to exist over the distance between the centers of the regions. These region centers are the nodes in the finite difference model used to analyze the circuit board.

The surface of the board forms part of the air duct previously mentioned in the discussion concerning the calculation of the convective heat transfer coefficient from the parallel sides of the components (Hpara). The heat transfer coefficient of the board varies with distance from the air centered in the regions, the convective heat transfer coefficient for the board (Hb) is assumed to be equal to Hpara. The area for heat transfer from each region (Areg) includes both sides but excludes any area under the component (Ae) since the air is assumed not to flow in the small gap between the component and the circuit board. The area (Areg) is calculated from the equation:

$$Areg = \frac{(2) \times (Bdl) \times (Bdh)}{Nreg} - Ae$$

where Bdl = Length of circuit board

Bdh = Height of circuit board

The convective resistance from the circuit board region (Rb-conv) is therefore:

$$Rb\text{-}conv = \frac{1}{(Hb) \times (Areg)}$$

The conduction of heat within the circuit board material and any added conductive material is assumed to occur between the nodes located at the centers of each region. For a given region, this heat flow is assumed to occur only out the four sides of the region. The distance between nodes in the horizontal or air flow direction (Lr) is calculated from the circuit board length (Bdl) and the number of regions in the horizontal direction (Nxr). The expression used is:

$$Lr = \frac{Bdl}{Nxr}$$

Likewise, the vertical spacing between nodes (Hr) is calculated as:

$$Hr = \frac{Bdh}{Nyr}$$

These distances are used with the circuit board thickness (Thb) and the circuit board material thermal conductivity (kb) to determine the base board conductive resistances in both the vertical (Rb-ver) and horizontal direction (Rb-hor). The expressions used are:

$$Rb\text{-}ver = \frac{Hr}{(kb) \times (Lr) \times (Thb)}$$

and

$$Rb\text{-}hor = \frac{Lr}{(kb) \times (Hr) \times (Thb)}$$

The conductive resistances in the material added to the circuit board is treated in the same manner since these materials are also assumed to connect the nodes. The conductivity of the material (kl) and physical area (al) have been specified for either a conduction path unit (CPU) or electrical lead. These are used in the expressions:

$$Rl\text{-}ver = \frac{Hr}{(kl) \times (Al)}$$

and

$$Rl\text{-}hor = \frac{Lr}{(kl) \times (Al)}$$

to determine the thermal resistance for conduction in a single conduction path. This resistance is divided by the number of such paths to determine the total conductive resistance of the material added to the circuit board.

This resistance is assumed to be in parallel with the conductive thermal resistance of the bare circuit board and a net conductive thermal resistance is calculated for each of the four directions using a normal product-over-sum formula for parallel resistances. Figure 10 shows how a typical region would thus be connected to the four adjacent regions. The values of these conductive thermal resistances are stored in a two dimensional array, Rl (I,J), where the

first index represents the region number and the second index is the direction number (1, 2, 3, 4). These numbers represent bottom, right side, top, and left side, respectively. For example, Figure 10 shows how Rl (I,2) connects region number I and region number I + 1. For those regions on the edges of the circuit board, the conductive thermal resistance in the direction off the board are set to very high value due to the assumed adiabatic boundary conditions for all edges. The set of conductive thermal resistances, Rl (I,J), is used in the heat balance for the circuit board.

With the component treated as the source of heat for the circuit board, one may again apply a simple heat balance for a region as follows:

$$Qe\text{-}b = Qconv + Q_1 + Q_2 + Q_3 + Q_4$$

where Qconv represents the heat transfer to the cooling air and Q_1 through Q_4 represent the heat conducted to the adjacent regions as shown in Figure 10. This expression may be written for Region I as:

$$\frac{Te(I) - Tb(I)}{Rtota\text{-}b} = \frac{Tb(I) - Tair(I)}{Rb\text{-}conv} + \frac{Tb(I) - Tb(I + Nxr)}{Rl(I,i)}$$

$$+ \frac{Tb(I) - Tb(I + 1)}{(Rl(I,2)} + \frac{Tb(I) - Tb(I\text{-}Nxr)}{Rl(I,3)}$$

$$+ \frac{Tb(I) - Tb(I\text{-}j)}{Rl(I,4)}$$

As previously stated, the heat balance equation for the component derived in Section 3 may be solved for Te(I) and that expression

used to eliminate Te(I) from the equation above. The only unknowns will then be the board temperatures. A heat balance for every region may be performed resulting in Nreg simultaneous algebraic equations. The coefficients of these equations may then be collected into a matrix and solved using an LU decomposition method [21].

5. The Analysis

In performing the thermal analysis of the circuit board, there are two separate situations to be considered: 1. Specified component power - determine steady state junction temperature; 2. Specified junction temperature - determine the maximum power allowable. For the first situation a case temperature (Te) is assumed for each component since this is necessary to determine the effective radiation resistances. All thermal resistances and the local air temperatures are then calculated using the given variables. The resulting system of Nreg simultaneous equations is solved using LU decomposition for the temperature of each region of the circuit board Tb.

This set of board region temperatures is used to determine the set of component case temperatures using the expression for Te determined from the heat balance of the component. These component temperatures are compared to those from the previous iteration. If the largest difference between any of the temperatures is less than the convergence criterion established by the user (default .1 degC), the

results are presented in the graphics mode on a fascimile of the circuit board as shown in Figure 11.

In the display of the circuit board, each region contains the component type, junction temperature, power level and case temperature for the component in that region. Empty regions contain only the temperature of the circuit board. Those junction temperatures that are within 5% of the maximum are starred (**) for easy reference. This output is dumped to the internal thermal printer to provide a hard copy.

If convergence has not been reached, the new case temperature is used to calculate new radiation thermal resistances and the new system of equations solved. Figure 12 shows the intermediate display of all temperatures that is presented on the screen while the next iteration is in progress. If longer than 20 lines, the maximum display area for output on the screen, this display may be moved up or down with the display control keys at the center top of the keyboard (see Figure 2). Convergence typically occurs in less than four iterations when solving for component junction temperatures.

For the second situation with specified junction temperatures (Tj), a power level of .25 watts is assumed for each component. The component case temperature may then be determined from the expression:

$$Te = Tj - \frac{Pow}{Rj\text{-}c}$$

where Rj-c represents the case to junction thermal resistance set by the user. As in the first situation, all the thermal resistances and the local air temperatures (Tair) are calculated. It is important to note that Tair depends on the assumed power levels since these values will change with each iteration. The resulting system of simultaneous equations is again solved for the board region temperatures and the component case temperatures. The resulting component power levels for each region are determined from the expression

$$Pow = \frac{Te - Tb}{Rtote\text{-}b}$$

This component power level for each component is compared to the results of the previous iteration or the assumed values for the first iteration. Convergence is assumed when the largest percentage difference from these comparisons is less than the convergence criterion established by the user (Default 1%).

The output is presented in the same manner as before except those power levels within 5% of the minimum are starred (**) in this situation (Fig. 13). Since both the radiation thermal resistances and local air temperatures depend on the power levels, more iterations are required before convergence is reached. Typically less than six are sufficient.

6. What Now Option List

Following a complete cycle through THERML, there are several options available to the user. A different circuit board may be analyzed either by entering the descriptive data set from the keyboard or by retrieval from mass storage. The previously recorded data set may be read in using THERML with no data checking capabilities or BOARDS may be loaded under program control to allow data checking or changes to the circuit board.

In addition the same circuit board may be reanalyzed with a new set of installation parameters, i.e., board spacing, inlet air temperature and volumetric air flow rate per board.

7. Sensitivity Analysis

Another option available allows the user to investigate the effects of various air flow rates. The user specifies a maximum air flow rate and five separate analyses are performed for each of five air flow rates up to the maximum specified. Figure 14 shows how the results of this sensitivity analysis are presented for the situation of specified power levels while Figure 15 is an output for the second situation of specified junction temperatures. The outputs from each analysis such as Figures 11 and 13 are not presented during the sensitivity analysis since the graphics mode is used but an output such as Figure 12 may be presented on the thermal printer if records of individual components are needed for each of the separate air flow rates.

A final option available to the user is termination. It is important to terminate the THERMELEX system under program control to insure normal key definitions are returned and graphics parameters correctly assigned.

III. RESULTS AND CONCLUSIONS

The THERMELEX system offers the designer of electronic circuit boards the means to predict the thermal performance of air cooled circuit boards and avoid the problems that often surface only after the equipment is in use. The system is easy to use yet provides valuable data in a variety of formats that can help the designer to make important design decisions regarding circuit board layout and/or cooling air flow parameters.

The THERMELEX system has been tested with a wide variety of circuit boards to insure that various combinations of the possible components and empty regions will create valid descriptive data sets and reasonable results. In all test cases the results have been satisfactory when compared to expected results. For example, higher component power levels result in higher junction temperatures and decreasing air flow produces higher temperatures with all else the same. Several tests were made that used the results of a power level prediction as input to the same circuit board to insure that predicted junction temperatures were the same as those specified for the original test.

In addition to the above tests for general validity, direct comparisons to experimentally determined component

case temperatures reported in reference (14) were made. The circuit board consisted of 25 equally spaced 14 pin DIPs and is depicted in Figure 6. Three different air flow rates and four different component power levels were used. The results of these experiments are shown in Figure 16. These same flow rates and power levels were used as inputs for THERMELEX and the predicted maximum case temperatures are also included in Figure 16. At the lower power levels, the agreement with the experimental results is encouraging but for the higher power levels there are significant differences. In particular, the predicted maximum case surface temperature shows a much stronger dependence on the air flow rate than the experimental results would indicate. It is believed that several effects neglected in the the thermal model become significant for low flow rates and higher component power levels. For low air flow rates, the effects of natural convection heat removal become more important, thus decreasing the actual surface temperature. In addition, at higher temperatures, the conduction into the electrical connectors and mechanical supports will also tend to hold the surface temperatures lower for the experimental results. Further work is needed to resolve the differences between the experimental results and those predicted by THERMELEX. Particular attention towards refinement of the thermal model is required.

IV. RECOMMENDATIONS FOR FUTURE WORK

While the present version of THERMELEX can be a valuable tool for predicting thermal performance of electronic circuit boards, improvements and refinements would be useful in several areas. The first recommendation would be for more experimental verification with particular emphasis towards developing better empirical heat transfer relationships for use in the present thermal model. The thermal model should also be expanded to include both the effects of natural convection and boundary conditions other than adiabatic. In particular the user should be able to specify a constant temperature for one or more of the physical circuit board boundaries. This would allow the modeling of installations that include metal card guides or cold plates.

The present model does not include the interaction that can occur between circuit boards mounted closely together. These effects could be included in the radiation sink temperatures "seen" by a board or included as effects on the local air temperature for the bottom and top of the circuit board.

Additional improvements could also be made in order to increase the number of circuit board designs that may be analyzed with THERMELEX. The limited set of components could be increased to include DIPs with different numbers

of pins and other flat pack case styles. Discrete components such as resistors, capacitors and switches are also able to transfer heat to the air stream and could also be included.

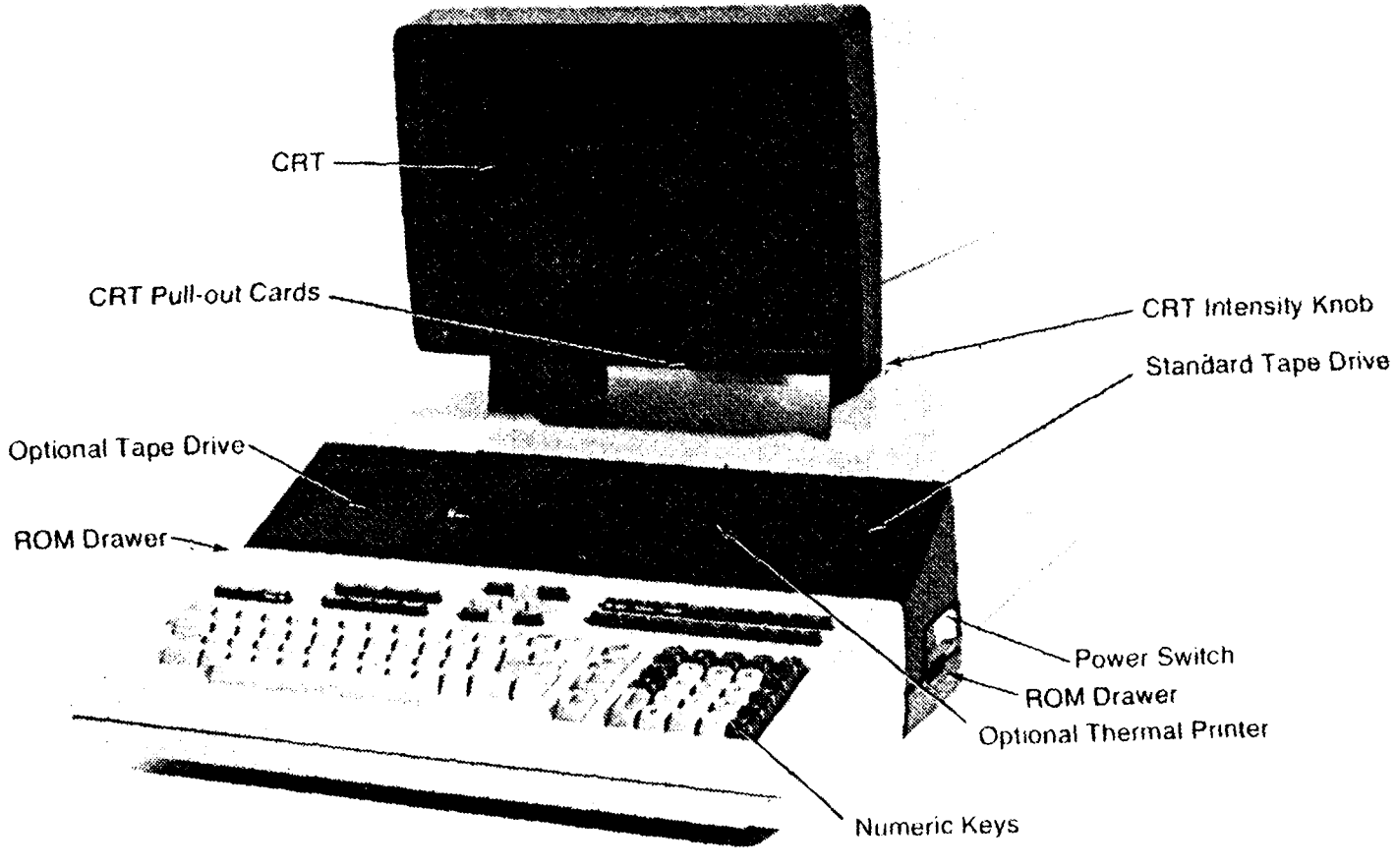

Figure 1. The Hewlett-Packard 9845 desktop computer

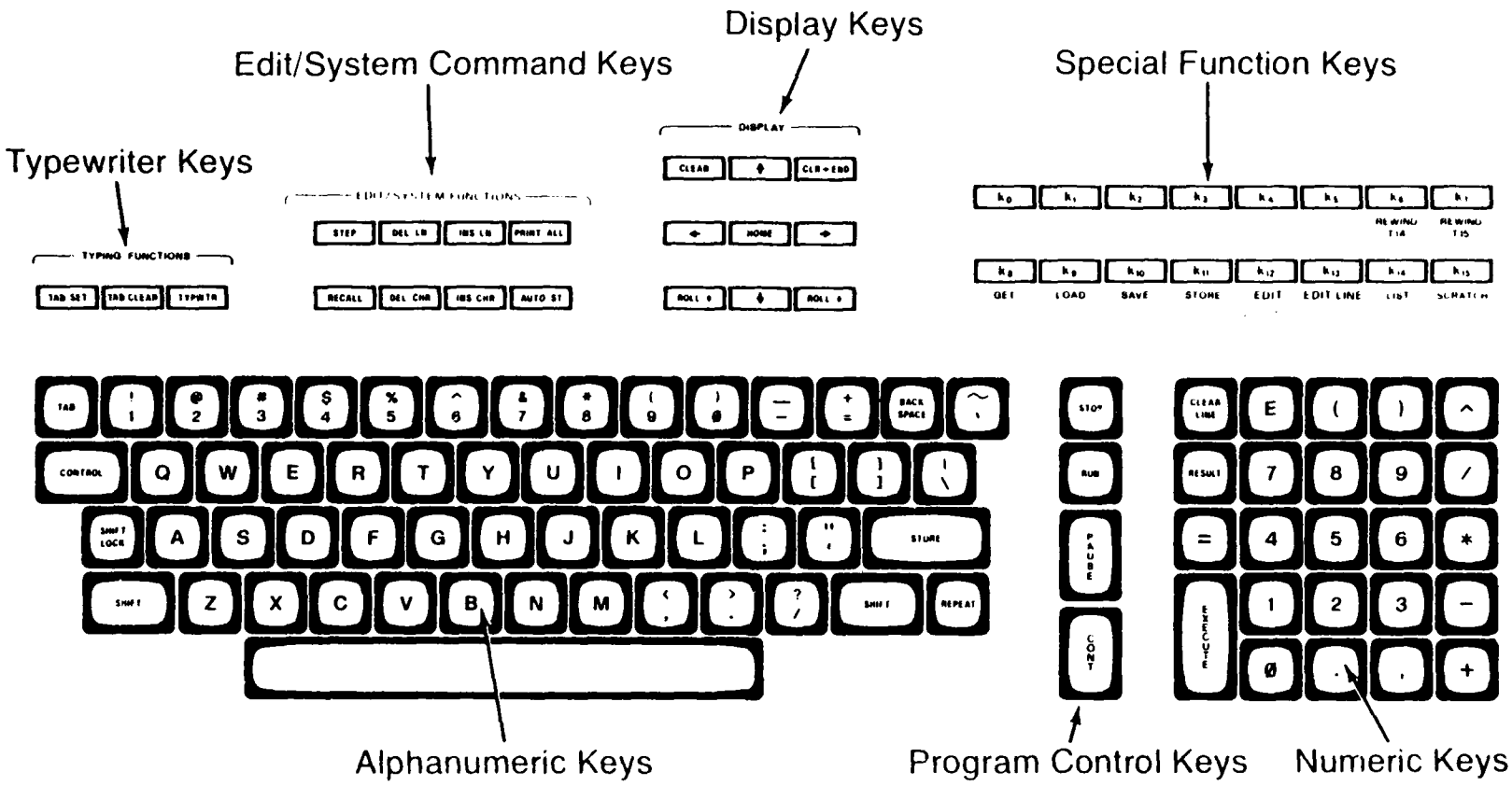

Figure 2. The Keyboard

TEAR OFF FOR GENERAL PURPOSE KEY CODE OVERLAY

Back_up (ko)	EXIT GRAPHIC	ENTER GRAPHIC	DUMP GRAPHIC	PRT IS 16	PRT IS 0	REWND :T14	REWND :T15	PLACE ABOVE KEYS

TEAR HERE ---------- THEN PRESS CONT ---

(18)					EDIT LINE	YES	NO	PLACE BELOW KEYS

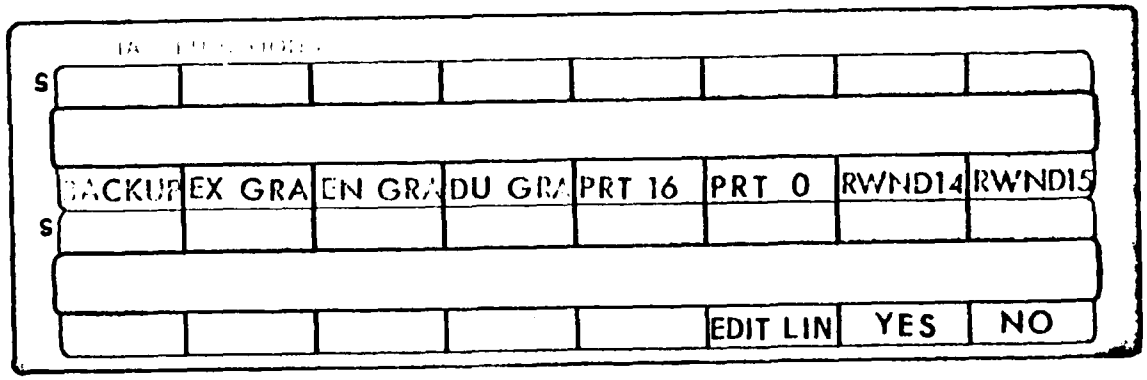

Figure 3: General Purpose Keycode Overlays

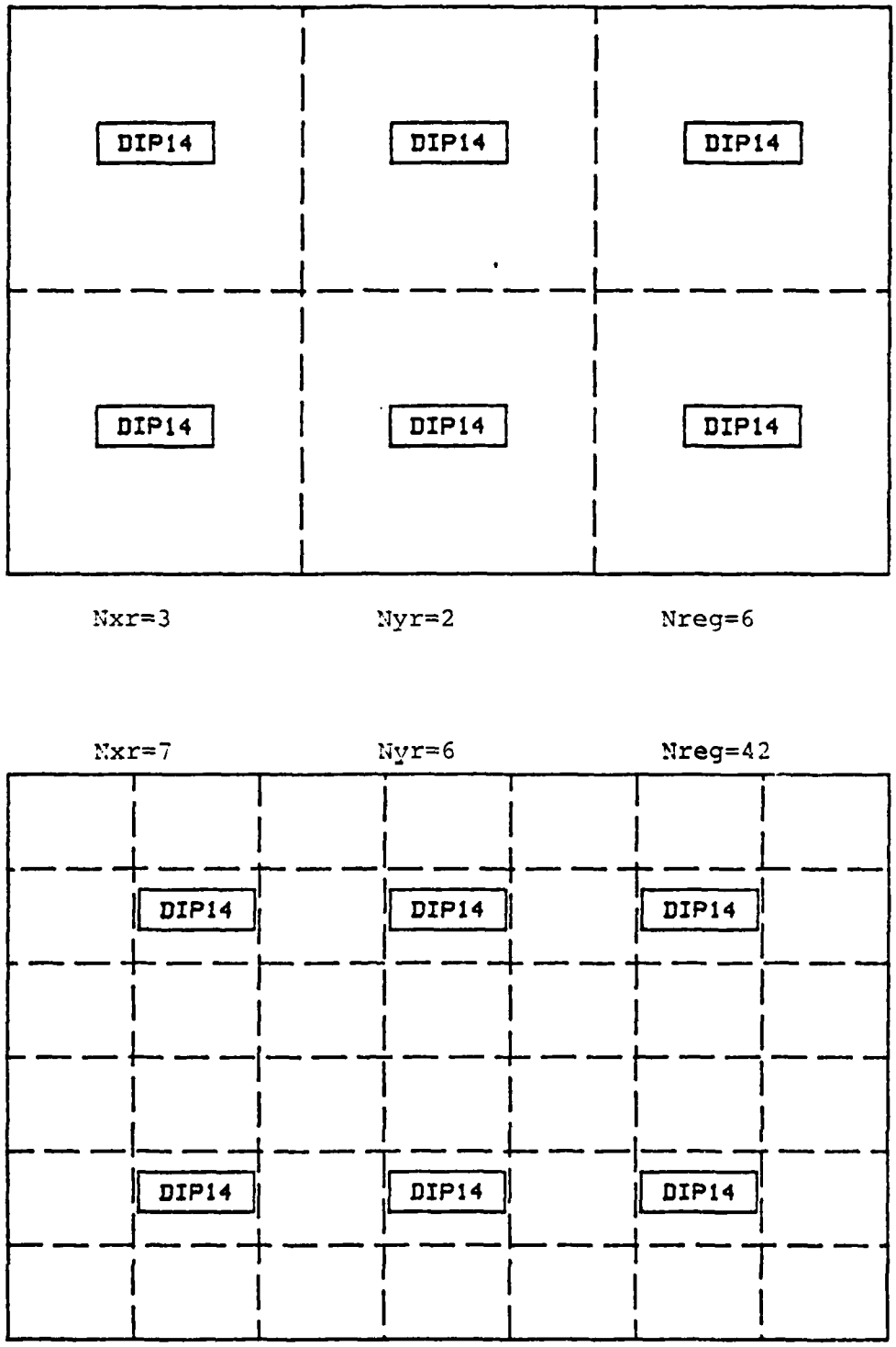

Figure 4. Alternate Region Definition for Single Circuit Board

TEAR OFF FOR COMPONENT DEFFINITION KEY CODE OVERLAY

EMPTY (k0)	HORIZ DIP14	VERT DIP14	HORIZ DIP16	VERT DIP16	HORIZ DIP24	VERT DIP24	PLACE ABOVE KEYS

TEAR HERE ----------THEN PRESS CONT ---

(k8)	HORIZ DIP40	VERT DIP40	FLAT 16 PIN	FLAT 24 PIN	FLAT 40 PIN	FLAT 64 PIN	PLACE BELOW KEYS

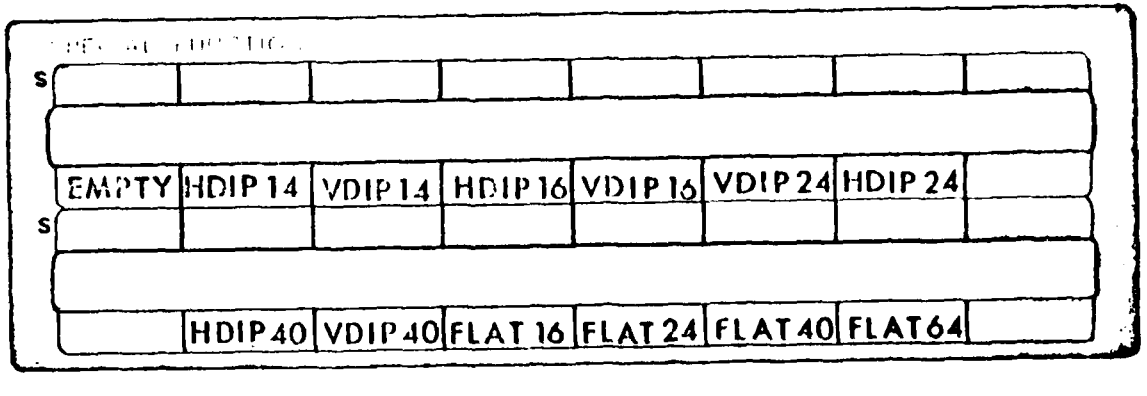

Figure 5: Component Definition Keycode Overlay

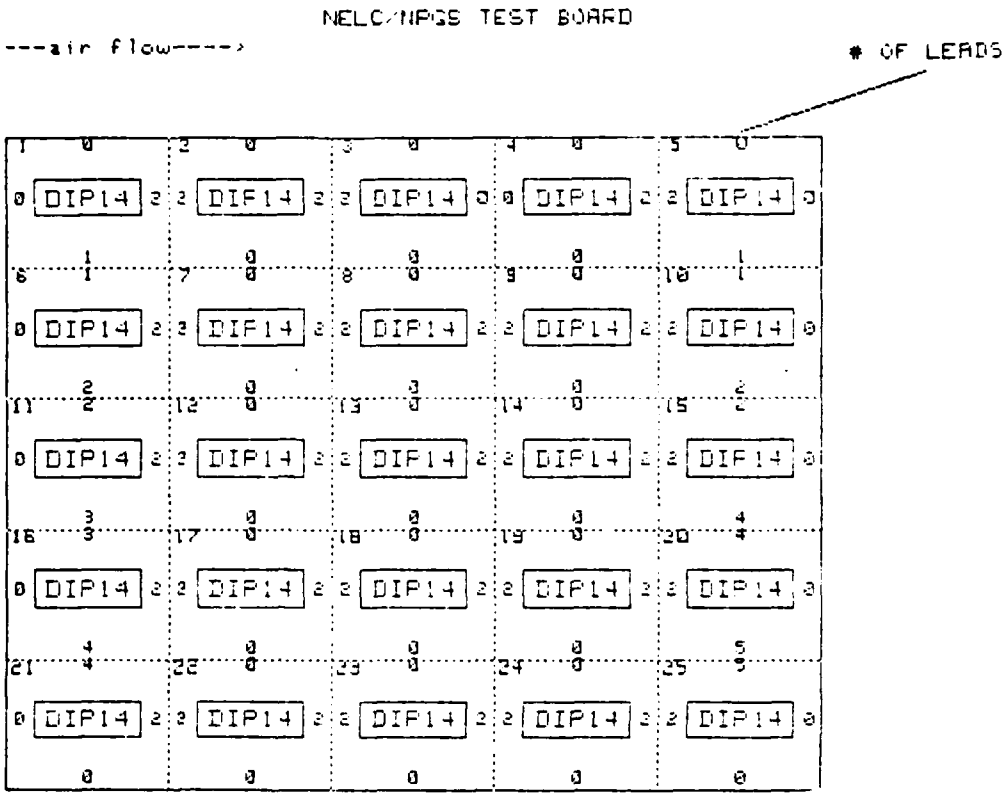

Figure 6. Graphics Dump of Circuit Board

REGION #	Tjunc (DegC)	Power (Watts)	Rcase-j (W/C)
1	0	.6	0
2	0	.6	0
3	0	.6	0
4	0	.6	0
5	0	.6	0
6	0	.6	0
7	0	.6	0
8	0	.6	0
9	0	.6	0
10	0	.6	0
11	0	.6	0
12	0	.6	0
13	0	.6	0
14	0	.6	0
15	0	.6	0
16	0	.6	0
17	0	.6	0
18	0	.6	0
19	0	.6	0
20	0	.6	0
21	0	.6	0
22	0	.6	0
23	0	.6	0
24	0	.6	0
25	0	.6	0

THE ABOVE DATA IS FOR NELC/NPGS TEST BOARD

BOARD LENGTH (defined along air flow)= 142 mm HEIGHT = 114 mm

BOARD THICKNESS= 1.448 mm CONDUCTIVITY = .2942 Watts/M-K

THE MODEL ASSUMES LEADS AS CONDUCTION PATHS WITH AN AREA OF .000000026 mm^2

THERMAL CONDUCTIVITY OF THE LEADS = 384 Watts/M-C

Figure 7. Data List of Circuit Board

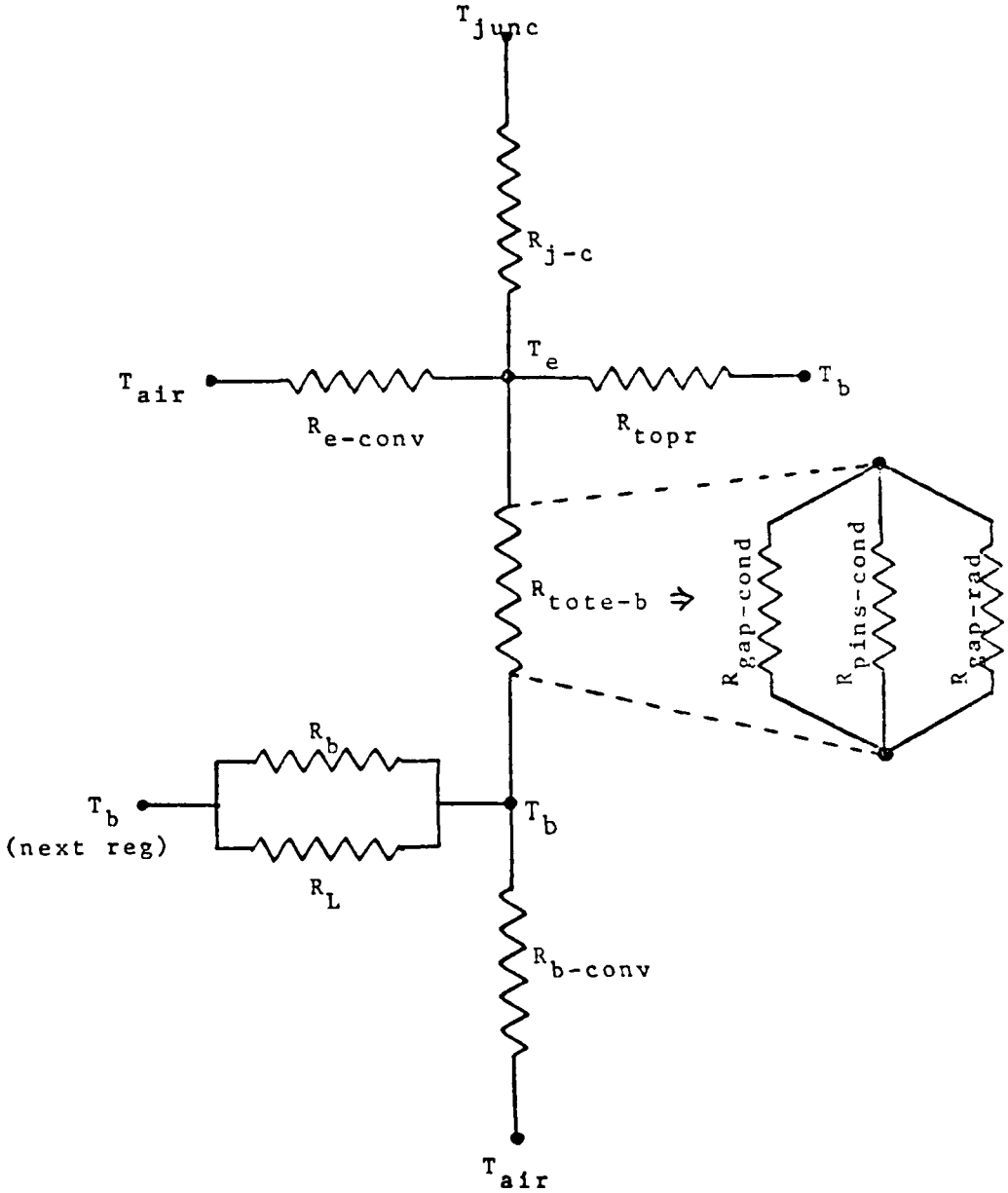

Figure 8 Thermal Network of Components and Circuit board

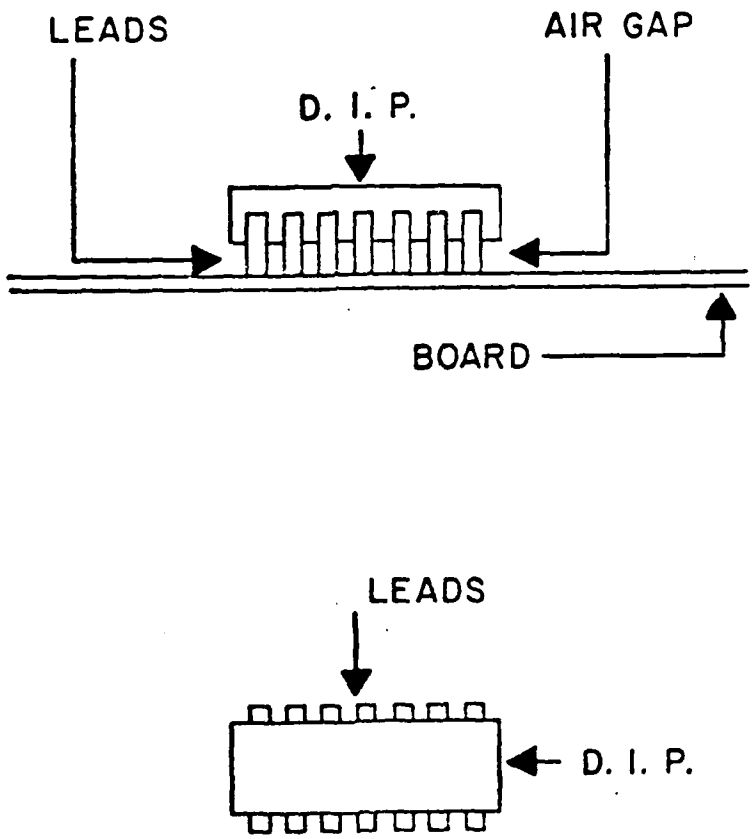

Figure 9: DIP Mounting on Circuit Board

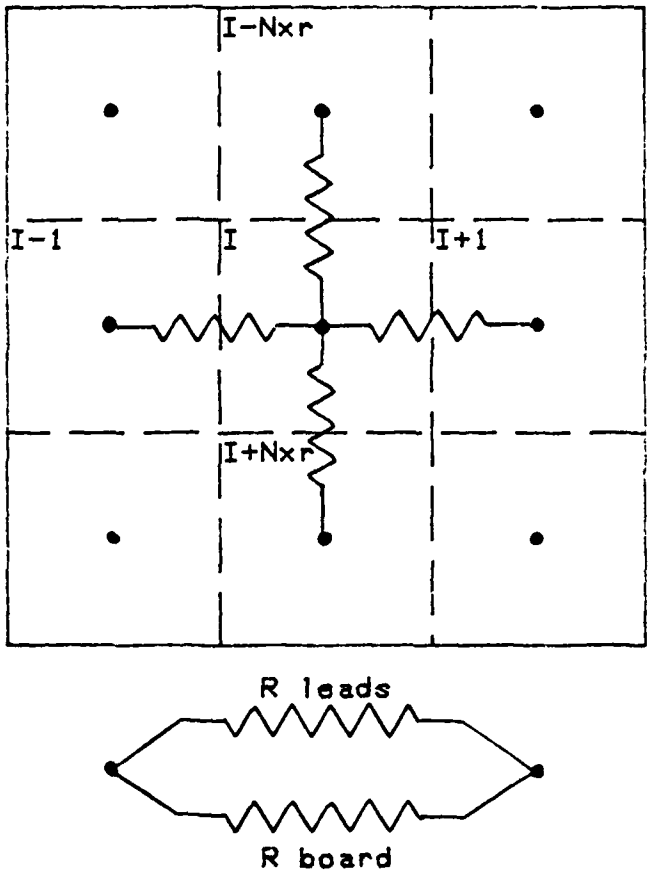

CONDUCTIVE THERMAL RESISTANCE BETWEEN REGIONS

Figure 10. Thermal Network of the Bare Circuit Board

OUTPUT DATA FOR NELC-NPGS TEST BOARD

---air flow--->

1 DIP 14 38.7 C .600 W 23.7 C	2 DIP 14 41.1 C .600 W 26.1 C	3 DIP 14 42.7 C .600 W 27.7 C	4 DIP 14 ** 44.1 C .600 W 29.1 C	5 DIP 14 ** 45.3 C .600 W 30.3 C
6 DIP 14 38.7 C .600 W 23.7 C	7 DIP 14 41.1 C .600 W 26.1 C	8 DIP 14 42.7 C .600 W 27.7 C	9 DIP 14 ** 44.1 C .600 W 29.1 C	10 DIP 14 ** 45.3 C .600 W 30.3 C
11 DIP 14 38.7 C .600 W 23.7 C	12 DIP 14 41.1 C .600 W 26.1 C	13 DIP 14 42.7 C .600 W 27.7 C	14 DIP 14 ** 44.1 C .600 W 29.1 C	15 DIP 14 ** 45.3 C .600 W 30.3 C
16 DIP 14 38.7 C .600 W 23.7 C	17 DIP 14 41.1 C .600 W 26.1 C	18 DIP 14 42.7 C .600 W 27.7 C	19 DIP 14 ** 44.1 C .600 W 29.1 C	20 DIP 14 ** 45.3 C .600 W 30.3 C
21 DIP 14 38.7 C .600 W 23.7 C	22 DIP 14 41.1 C .600 W 26.1 C	23 DIP 14 42.7 C .600 W 27.7 C	24 DIP 14 ** 44.1 C .600 W 29.1 C	25 DIP 14 ** 45.3 C .600 W 30.3 C

TYPE Tjunc POW Tcase	or	EMPTY Tboard

	FLOW RATE	VELOCITY	Tin	Tout
COOLING AIR	.0070N 3 Sec	4.5596M-Sec	20.0deg C	21.8deg C

LARGEST CHANGE IN TEMP BETWEEN ITTERATIONS # 1 AND # 2 .0025

CIRCUIT BOARD DESCRIPTION IS STORED UNDER TEST6

Figure 11. Final OUTPUT DATA from THERML.(Temperature Solution)

DATA FOR NELC/NPGS TEST BOARD # 1 ITTERATION

REG #	Tcase (DegC)	Tjunc (DegC)	Treg (DegC	Pow (W	Rjc (W C)
1.00	23.66	38.66	23.16	.60	25.00
2.00	26.06	41.06	25.55	.60	25.00
3.00	27.74	42.74	27.23	.60	25.00
4.00	29.12	44.12	28.62	.60	25.00
5.00	30.33	45.33	29.83	.60	25.00
6.00	23.66	38.66	23.16	.60	25.00
7.00	26.06	41.06	25.55	.60	25.00
8.00	27.74	42.74	27.23	.60	25.00
9.00	29.12	44.12	28.62	.60	25.00
10.00	30.33	45.33	29.83	.60	25.00
11.00	23.66	38.66	23.16	.60	25.00
12.00	26.06	41.06	25.55	.60	25.00
13.00	27.74	42.74	27.23	.60	25.00
14.00	29.12	44.12	28.62	.60	25.00
15.00	30.33	45.33	29.83	.60	25.00
16.00	23.66	38.66	23.16	.60	25.00
17.00	26.06	41.06	25.55	.60	25.00
18.00	27.74	42.74	27.23	.60	25.00
19.00	29.12	44.12	28.62	.60	25.00
20.00	30.33	45.33	29.83	.60	25.00
21.00	23.66	38.66	23.16	.60	25.00
22.00	26.06	41.06	25.55	.60	25.00
23.00	27.74	42.74	27.23	.60	25.00
24.00	29.12	44.12	28.62	.60	25.00
25.00	30.33	45.33	29.83	.60	25.00

BOARD THICKNESS= 1.45 mm AND CONDUCTIVITY = .29 Watts/M-K

COOLING AIR FLOW OF .0070 M^3 per SEC VEL= 4.5596 M/Sec (59.2743 FT/S)

INLET AIR TEMP= 20.0000 deg C OUTLET AIR TEMP= 21.8091 deg C

LARGEST DIFFERENCE BETWEEN ITTERATIONS = 3.3396 +++++

Figure 12. Intermediate OUTPUT Data from THERML

OUTPUT DATA FOR NELC/NPGS TEST BOARD .. POWER SOLUTION

—air flow—>

1 DIP 14 80.0 C 2.715 W 80.0 C	2 DIP 14 80.0 C 1.160 W 80.0 C	3 DIP 14 80.0 C .722 W 80.0 C	4 DIP 14 80.0 C .503 W 80.0 C	5 DIP 14 80.0 C ** .371 W 80.0 C
6 DIP 14 80.0 C 2.715 W 80.0 C	7 DIP 14 80.0 C 1.160 W 80.0 C	8 DIP 14 80.0 C .722 W 80.0 C	9 DIP 14 80.0 C .502 W 80.0 C	10 DIP 14 80.0 C ** .371 W 80.0 C
11 DIP 14 80.0 C 2.715 W 80.0 C	12 DIP 14 80.0 C 1.160 W 80.0 C	13 DIP 14 80.0 C .722 W 80.0 C	14 DIP 14 80.0 C .502 W 80.0 C	15 DIP 14 80.0 C ** .371 W 80.0 C
16 DIP 14 80.0 C 2.715 W 80.0 C	17 DIP 14 80.0 C 1.160 W 80.0 C	18 DIP 14 80.0 C .722 W 80.0 C	19 DIP 14 80.0 C .502 W 80.0 C	20 DIP 14 80.0 C ** .371 W 80.0 C
21 DIP 14 80.0 C 2.715 W 80.0 C	22 DIP 14 80.0 C 1.160 W 80.0 C	23 DIP 14 80.0 C .721 W 80.0 C	24 DIP 14 80.0 C .502 W 80.0 C	25 DIP 14 80.0 C ** .371 W 80.0 C

TYPE Tjunc POW Tcase	or	EMPTY Tboard

	FLOW RATE	VELOCITY	Tin	Tout
COOLING AIR	.0005M 3 Sec	.3257M Sec	20.0deg C	66.1deg C

LARGEST CHANGE IN POWER BETWEEN ITTERATIONS # 8 AND # 9 .0039

CIRCUIT BOARD DESCRIPTION IS STORED UNDER POWTST

Figure 13: Final Output Data From Therml (power solution)

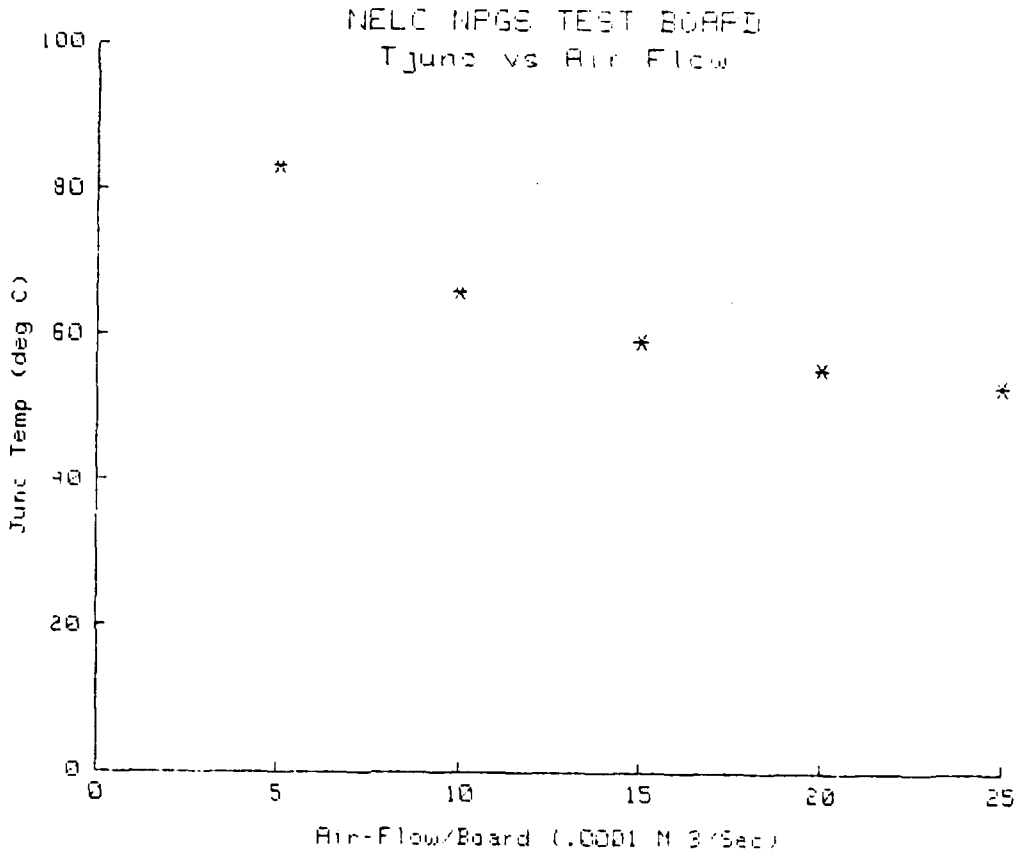

Figure 14. Sensitivity Plot: TJUNC vs Air Flow

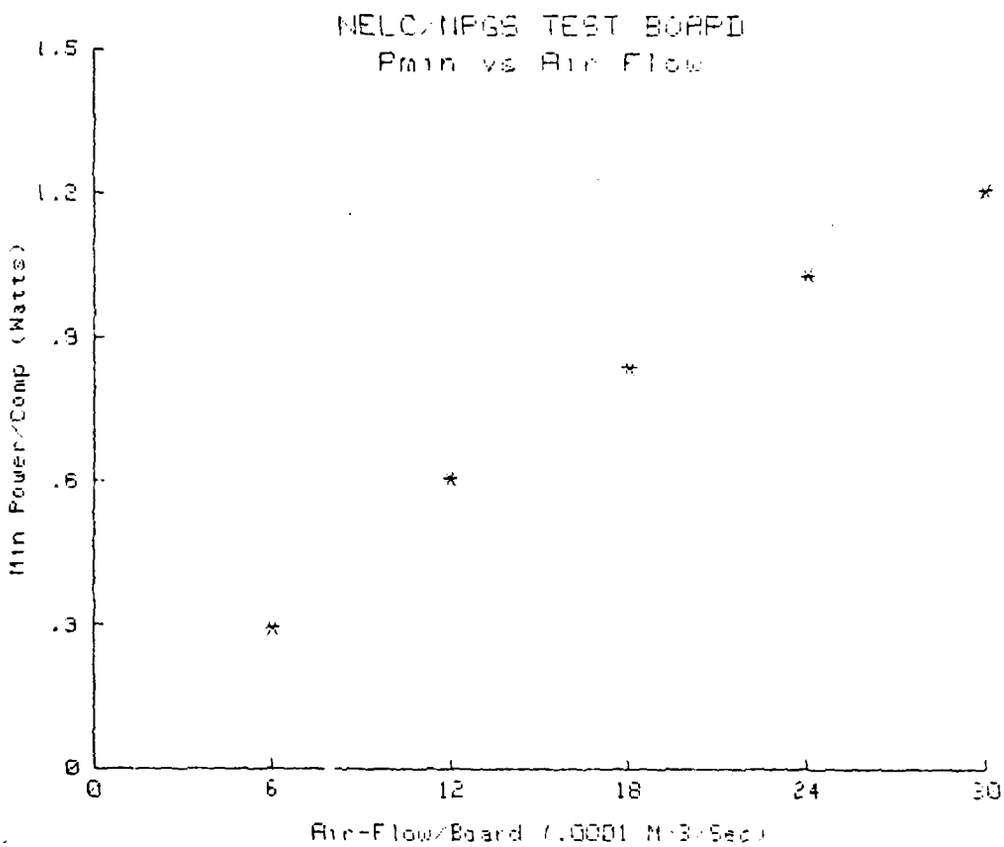

Figure 15. Sensitivity Plot: Power vs Air Flow

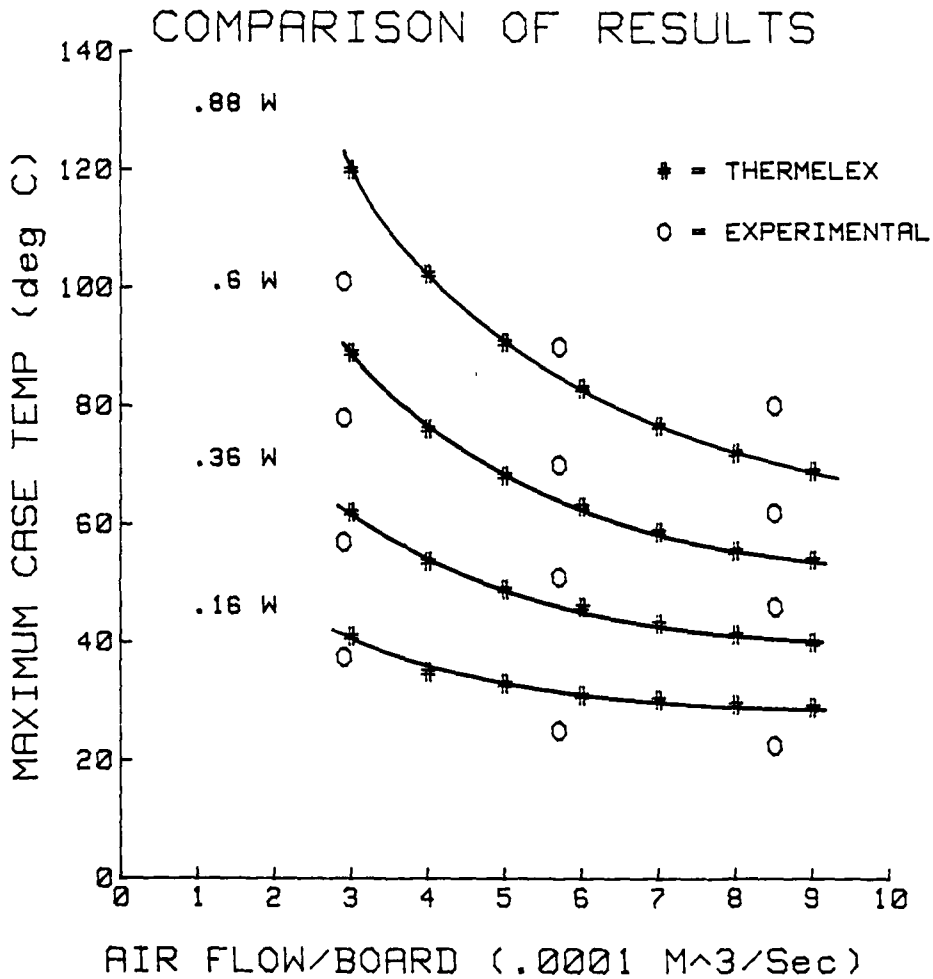

Figure 16. Comparison of THERMELEX Predicted Case Temperatures with Experimental Results from Ref. 14

APPENDIX A

** INSTRUCTIONS FOR USE OF THERMELEX **

The THERMELEX system is designed to perform thermal analysis of air cooled electronic circuit boards. The system consists of three major programs:

1. AUTOST Driver and system setup.
2. BOARDS Input and recording of data.
3. THERML Analysis and output of results.

The AUTOST program establishes special key deffinitions and acts as the driver for the other programs within the THERMELEX system. The key deffinitions are valid throughout the system except when entering the specific component type codes during execution of BOARDS .

This driver program is entered by placing the tape in the primary tape transport (:T15) at the right side above the special keys. You then:

TYPE: LOAD "AUTOST:T15",1 Then Press EXECUTE

If the 9845A is off, the driver may be loaded by inserting the tape in :T15, latching the AUTO ST Key in the down position, and turning the power on. In either case the first question will be concerning the location of the THERMELEX system. The program will convert the default mass storage device to what ever device contains the system. It is important to not change this while using THERMELEX These instructions may be provided on paper or CRT and a paper keycode overlay may be provided as a guide to the key deffinitions that is loaded by AUTOST. A plastic overlay is available from Hewlett-Packard (part # 7120-6164) which may be filled in using the paper overlay as a guide. The other programs are entered from the option selection list(Menu) in AUTOST. Normally BOARDS is next loaded to allow the input of circuit board descriptive data from the keyboard. The instructions that follow apply to this option.

The user should have either the circuit board or a facsimile available while he is using the BOARDS program. Orient the board such that the cooling air flow is from the left to the right. Measure the length (defined in the air flow direction), width and thickness of the circuit board in millimeters (mm). It is necessary to divide the board into evenly spaced imaginary regions in both horizontal and vertical directions. The centers of each of these regions will form the nodes of a finite difference grid to be used in the thermal analysis of the electronic circuit board. The imaginary lines that are created divide the circuit board into regions that will either be empty or will contain one component. An exception to this rule is the case of 40 pin DIP's which occupy two regions due to their large size. An attempt to approximate the real circuit board with a model requires some flexibility and imagination at this point.

The thermal model used for the analysis will assume that each component is centered in the region. The following components can be included:

DIPS (horizontal or vertical)	CHIP CARRIERS
14,16,24,40 pins	16,24,40,64 pins

The limitations imposed by restricting the components to the list above will prevent some circuit boards from being precisely modeled using THERMELEX but are necessary to provide for the simple input of the descriptive data.

When BOARDS is loaded using option #1 in AUTOST a control parameter is assigned which causes the program to begin at the section which asks for the geometric parameters of the bare circuit board. You will be asked to enter the length of the board in millimeters. Enter the length using either the number pad at the far right of the keyboard or the numbers above the letter keys followed by the CONT key. The next question will appear at the bottom of the screen while the length that was just entered will be printed immediatly below the instructions. Answer each question remembering to use the CONT key and check the values on the screen. If a mistake is made press K0 and the program will ask the question again. After the length, height, thickness, conductivity, number of regions in the 'X' direction and the number of regions in the 'Y' direction have been entered, the program will ask for a short (less than 50 characters) descriptive title. This title will become part of the data set for the circuit board and will be used to identify the output. Two examples are:

TEST BOARD FOR PROJECT UNIVERATS or DESCRIPTIVE TITLE #1234.9A .

The screen will now shift from the alpha mode to the graphics mode and draw an empty board with the imaginary regions marked off with dotted lines. This picture will remain on the screen for only 3 sec after it is drawn but it may be returned to the screen using k2 to allow further time for checking. K1 will return the screen to the alpha mode for the next section.

The special function keys will now be used to input the contents of each of the regions defined on the blank board. This is the last chance to use the Back-up option (10) if the board is not correct. A new Key code overlay will be provided if necessary and must replace the general purpose overlay on the keyboard. The keys defined in this section act as priority interrupts and will allow the screen to remain in the graphics mode as the components are defined. A flashing cross will move to each region in sucession and wait for a valid key to be pressed. Every region must be defined even if empty. It is important to wait for the cursor to move to the next empty region before keys are pressed. The back-up option will <u>NOT</u> work while defining components but there will be an opportunity to make corrections in the next section. When all regions have been defined, the screen will return to the alpha mode to ask if there are any corrections. At this point k2 will return the graphics to the screen and k1 will return the alpha mode to the screen.

To make corrections, the numbers of <u>ALL</u> incorrect regions are entered and the components erased. When there are no more to be removed, pressing CONT with no entry will allow all empty regions to be redefined. A flashing cross will visit each empty region followed by further correction opportunity as needed. When the board is correct, the general purpose key deffinitions are returned and the normal key code overlay should be replaced.

DIP components generally are produced in two different case styles, ceramic or plastic. These are different sizes and this affects the thermal analysis performed in THERML. The next section provides several methods to specify the case styles for the DIP's. These are: 1) all plastic...2) all ceramic... 3) majority ceramic (user specify which are plastic)...4) majority ceramic (user specify which are ceramic)...5) user specify case style for each DIP component. In general, option 3 or 4 require the user to input the number of regions that are either plastic or ceramic and are useful for specifying the style when when only a few are different. When there is a nearly equal mix, option 5 requires a 1 for plastic style and a 0 for ceramic style. After all DIP's are specified, a list of region numbers is displayed on the screen (in alpha mode) with the plastic cases in inverse video (numbers black on light background) and ceramic cases in normal video. Correct as needed and again no corrections is indicated by pressing CONT key with no entry.

The next section concerns the thermally conductive paths that are added to the circuit board. Both the electrical conductors and any thermal conduction paths or rails will transfer heat between regions. When any conduction rails are present, the effects of the electrical leads will be negligable and ignored. To aid in the modeling of the conduction rails it is necessary to introduce the concept of a Conduction Path Unit (CPU). Each of the rails is modeled as containing an integer number CPU's. The width of a CPU is defined to be .1 mm while the user must define the thickness (mm) and thermal conductivity (Watts/M-C) of the material that forms the conduction rails. The thermal conductivities of several aluminum alloys and copper are presented to aid the user. If there are no conduction rails present, the electrical lead description is entered in the much the same way; thickness (mm), average width (mm) and the conductivity (Watts/M-C). This will default to 384 Watts/M-C, the value for copper. This is the most commom material for traces on circuit boards.

In the next section the numbers of leads or CPU's that cross the interior boundaries between regions are entered. The display will alternate between the graphics and the alpha mode with the flashing cross or cursor moving to the appropriate location on the board to be defined. The graphics will remain on the screen for two seconds and then return to the alpha mode for an input line. It will ask for the input of the number of leads or CPU's between two specific regions; ie if the conduction rail is 6.7 mm wide, there are 67 CPU's in that path. Special function key 3 (F3) may be used to dump the graphics to the printer for a hard copy of the graphics picture. It is important to account for the leads on both sides of the circuit board when entering this number. As before follow all entries with the CONT key. Because of the program flow in this section, the Back_up option (F0) will not function. Do not attempt to make corrections or return to a previous section until after all entries have been made. All corrections will be made in the next section.

In the thermal model used by the THERMELEX system, all heat is transfered to the cooling air stream. None of the heat is transferred out the edges of the circuit board. For this reason, the sides of the regions at the edges will be labeled with 0 to indicate that no leads or CPU's cross this boundary. When this heat loss from the board edges and connector is neglected, the results will be conservative. These assumptions may be unacceptable for circuit boards used in installations where a significant fraction of the total heat dissipated is conducted away from the board through card guides or connectors.

When all regions have been specified, the screen will return to the alpha mode and ask if any corrections are needed. Use the special functions keys as required to either return to graphics-alpha or produce a hard copy. Enter the numbers of the connecting regions that have incorrect values for the numbers of leads or CPU's. As before, CONT with no entry signals the lack of further corrections. The physical description of the circuit board is now complete. All that remains is to specify either the component power levels (Watts) or the junction temperatures for each component.

When the maximum junction temperatures for the components are specified, the maximum steady state power level that will result in that temperature is calculated for each component. When the steady state power of each component is specified, the steady state junction temperatures are calculated. In either situation it is also necessary to specify the case to junction thermal resistance Rj_c (Deg C/Watt). The thermal model uses the component surface temperatures for heat transfer calculations and Rj_c provides the link between the component power, junction temperature and the surface temperature. If Rj_c is specified as zero (0) then the case surface temperature will be equal to the junction temperature.

After all component power levels or junction temperatures have been set, the complete list is displayed in the alpha mode to allow checking and changes. Corrections are inserted by entering the incorrect region number then entering the correct values in responce to the question asked. If desired a hard copy of all data for the circuit board will be provided from the printer.

The next section allows recording of the circuit board descriptive data on to a mass storage media. This should be done. The recorded data file may be accessed at some later time either in BOARDS for editing and changes or directly in THERML to perform the thermal analysis. BOARDS will create the the necessary data file to record the description but if a data file of sufficient size exists, it may be used. All old data in that file will be permanently lost. Information concerning the minimum data file size is presented by the program to help in this decision.

Built in error traps throughout the entire THERMELEX system will save the user from loss of previous inputs in case of errors. Information about the error is presented and using the error message guide on the plastic slide outs below the screen, the user may be able to make corrections. When ready, as signaled by CONT key, program flow returns to a previous point and operation resumes. The data recording section where file names are entered is particularly prone to spelling errors or entry of incorrect mass storage unit specifiers. Be careful but remember th system will attempt to catch those inevitable errors and act on them before they become fatal.

The end of a cycle through BOARDS is now complete. As the page heading that will appear states, WHAT NOW ?. More work with BOARDS is possible. The user may either input another circuit board description from the keyboard and record that to mass storage; or, he may retrieve a different circuit board descriptive data set from mass storage for checking and corrections. Another option is to perform the thermal analysis of the circuit board using the third program in the THERMELEX system, THERML.

Before an explanation of the program flow in THERML, some explanation of the use of BOARDS to edit previously recorded data files is in order. This option may be accesed through the use of AUTOST as explained on the first page of these instructions or the BOARDS program may be directly entered into the computer with the command: LOAD "BOARDS:T15,1" then Press EXECUTE

Of course the appropriate mass storage specifier should be used both here and when entering the file name for any previously recored data file. See the *Operating and Programming Manual for the 9845* if the above is not clear.

Following the input of the file name that contains the descriptive data, the data file will be read and all the variables that are normally set from the keyboard will be defined. The circuit board will be drawn on the screen in graphics mode and changes to the specific components that occupy the regions may be made. However; it is not possible to change the number of regions in any way. This major revision of the board must be done as a new board input. Correction to case styles is next and then the numbers of leads or CPU's between regions will be labeled on to the graphics picture of the circuit board Changes will be allowed to the numbers but not the physical sizes of the leads or CPU's; this also requires a new board input. A list of power levels, junction temperature and case to junction thermal resistances is presented for checking and corrections as required. This edited descriptive data set may then be recorded either back to the same data file or to a new file.

There are two demonstration data files included in the THERMELEX system. DEMO-T contains a typical circuit board description needed to determine the steady state junction temperature (ie component power levels are specified). DEMO-P contains a different circuit board for which maximum powers levels are determined in the thermal analysis. The use of either of these can be helpful to familiarize the user with both BOARDS and the last program in the THERELEX system, THERML.

THERML creates the mathematical model, performs the analysis of the circuit board and produces the output. The variables used in the thermal model are set using either a data file from mass storage or they are passed in a common block when THERML is loaded from BOARDS. There are no correction opportunities for the circuit board descriptive variables in this program.

Assuming that THERML has been loaded from the What Now option list in BOARDS, the first input is the inlet temperature(deg C) of the cooling air. After this is entered and printed on the screen, the volumetric air flow rate (M^3/sec) is requested. Since the same set of general purpose special function keys are valid in this program, the keycode overlay should remain and k0 (Back-up) may be used to return to a previous question when input errors are made. The next input is the spacing between the circuit boards for rack mounts. This spacing and the board height determines the size of the immaginary air duct containing the circuit board. When combined with the amount of air flow for each circuit board the air velocity and heat transfer correlations are determined. Since all the power dissipated on the circuit board must be removed by the air flow, it is important for these values to be as precise as possible. After the thermal analysis is complete, there will be opportunites to alter these important air flow paramters and examine the effects on the output.

Before the analysis begins, the convergence criteria must be set. The analysis consists of assuming a solution then defining a set of simutaneous equations (one for each region) which are solved for either the power or the junction temperatures. The results are compared to the previous results (the assumed values for the first itteration) and if the largest difference between these values is less than a maximum set by the user, the results are presented in graphics. If the convergence criteria is not met, the results are printed to the screen in alpha mode and another itteration is entered. The closer to zero one sets the convergence criteria, the longer the process takes. Default values for the convergence criteria are .5 Deg C or 1% change in power. These typically require 2 to 6 itterations before they are met. Each itteration takes 5 to 100 sec to perform depending on the number of regions. As the solution proceeds the user may view the intermediate results to watch the progress.

The final results are written onto a picture of the circuit board with each region containing component type, junction temperature, power level and case temperature. Empty regions contain only the temperature of the circuit board. Those junction temperatures within 5% of the maximum and those power levels within 5% of the minimum are starred (**) for easy reference as trouble spots. This graphics output is automatically dumped to the printer to insure that a hard copy of the results exist.

This completes a cycle through THERML and again the question is What Now ? BOARDS may be returned to core, to make changes to the circuit board or to enter a new circuit board. Another analysis of the same circuit board may be done with a new set of air flow paramters or, a new circuit board descriptive data set may be read in from mass storage with THERML.

An additional option is sensitivity analysis. Plots of the maximum Tjunc vs. Air Flow Rate or the minimum Power vs. Air Flow Rate may be produced. A maximum air flow rate is specified and five separate analyses are performed and the results plotted and dumped to the printer. The maximum air flow rate specified should be an integer multiple of five to make for better looking axes. It is also possible to produce hard copys of the printed results for each of the air flow rates. Upon completion of this sensitivity analysis, program flow returns to the option list previously discussed.

Termination should be done under program control using the final option. This will insure that the standard key definitions are returned and that the proper graphics parameters are set for the next user of the computer.

GOOD LUCK

APPENDIX B

```
10   !                AUTOST    ..... DRIVER PROGRAM FOR .....
20   !
30   ! ********************          THERMELEX          ***************************
40   ! *                                                                          *
50   ! *              A SYSTEM OF PROGRAMS FOR THE HP 9845                        *
60   ! *                                                                          *
70   ! *    TO PERFORM THERMAL ANALYSIS OF ELECTRONIC CIRCUIT BOARDS              *
80   ! *                                                                          *
90   ! ***********************************************************************
100  ! *                                                                          *
110  ! *                                                                          *
120  ! *       PREPARED AT THE NAVAL POSTGRADUATE SCHOOL MONTEREY                 *
130  ! *                                                                          *
140  ! *                      R. A. FOLTZ LCDR USN                                *
150  ! *                                                                          *
160  ! *                                                                          *
170  ! *                     |||||   AUTOST  |||||                    JUNE 80    *
180  ! *                                                                          *
190  ! ***********************************************************************
200   PRINTER IS 0
210   PRINT CHR$(27)$"$134T"
220   DIM S$[60]
230   COM Map
240   PRINTER IS 16
250   GOSUB Setsto
260   GOSUB Inst
270   IF Ans$="BACK_UP" THEN GOTO 240
280   GOTO Start
290 Starte:  GOSUB Error
300 Start:  S$="NOTE TO USER ABOUT SPECIAL FUNCTION KEYS"
310  ON ERROR GOTO Starte
320   GOSUB Pagehead
330   PRINT "    The following user-keys will be in effect unless otherwise note
d."
340   PRINT "In general these key deffinitions are valid only when the program
 is waiting"
350   PRINT "for an input (ie Run light in lower right corner is off).  The Back
_up option"
360   PRINT "(k0) returns the program to a previous question or control point."
370   PRINT
380   PRINT "This should be used when the user decides he has made some error on
 input that"
390   PRINT "can be corrected by re-entering the data."
400   PRINT
410   PRINT "If you do not have a plastic key code overlay filled in (hp # 7120-
6164)"
420   PRINT "a paper one will be provided."
430   PRINT LIN(1)
440   PRINT "      KEY 'k0' will back up to the previous question."
450   PRINT "      KEY 'k1' will display printed output.          (EXIT GRAPHICS )"
460   PRINT "      KEY 'k2' will display plotted output.          (GRAPHICS)"
470   PRINT "      KEY 'k3' will print copy of plotted output.   (DUMP GRAPHICS )"
480   PRINT "      KEY 'k4' will disable internal printer.        (PRINTER IS 16 )"
490   DISP "Press CONT WHEN READY FOR MORE EXPLANATIONS"
500   PAUSE
510   PRINT "      KEY 'k5' will enable internal printer.         (PRINTER IS 0)"
520   PRINT "      KEY 'k6' will rewind left hand tape.           (REWIND  :T14  )"
530   PRINT "      KEY 'K7' will rewind right hand tape.          (REWIND  :T15  )"
```

```
540   PRINT "      KEY (K14 will answer Yes."
550   PRINT "      KEY (K15 will answer No."
560   PRINT LIN(2)
570   PRINT "In general when answering questions or selecting an option pressing
  CONT  "
580   PRINT "with no other entry will assign either the default or the first opt
ion in"
590   PRINT "parentheses (the first option in the list) as the desired option."
600   PRINT LIN(1)
610   PRINTER IS 16
620   GOSUB Overlay
630   IF Ans$="BACK_UP" THEN 250
640   DISP "LOADING KEY DEFFINITIONS"
650   IF Map=0 THEN LOAD KEY "BDSKEY"
660   WAIT 1000
670 GOTO 690
680 Optionse:  GOSUB Error
690 Options:  S$="MAIN PROGRAM OPTIONS"
700  ON ERROR GOTO Optionse
710   GOSUB Pagehead
720   PRINT "     The THERMELEX program package consists of three major sections,
 one of"
730   PRINT "which is in core now providing these instructions.  The other two a
re called"
740   PRINT "BOARDS and THERML.  Both have the capability to read circuit bo
ard data"
750   PRINT "from a Mass Storage Device (eg Tape or Disk) but only BOARDS can:
"
760   PRINT "(a) Input circuit board description from keyboard...";
770   PRINT "(b) Allow graphical checkingof descriptions..";
780   PRINT "(c) Make corrections to descriptions as required...";
790   PRINT "(d) Record  descriptions to mass storage..."
800   PRINT LIN(1),"THERML performs the thermal analysis and output of results
."
810   PRINT LIN(1),"YOUR OPTIONS ARE:";
820   PRINT "   1. LOAD BOARDS TO INPUT DESCRIPTION FROM KEYBOARD."
830   PRINT LIN(1),SPA(20),"2. LOAD BOARDS TO READ DESCRIPTION OFF MASS STORAG
E"
840   PRINT LIN(1),SPA(20),"3. LOAD THERML TO READ DESCRIPTIONS OFF MASS STORA
GE";                          WITH IMMEDIATE ANALYSIS."
850   PRINT LIN(1),SPA(20),"4. COPY ALL PROGRAMS "
860   Ans$="1"
870   INPUT "YOUR CHOICE ? (1,2,3,4)",Ans$
880   IF Ans$="BACK_UP" THEN Start
890   Ans=INT(VAL(Ans$))
900   IF (Ans>0) AND (Ans<5) THEN 930
910   GOSUB Errin
920   GOTO Options
930   IF Ans=1 THEN Map=2
940   IF Ans=2 THEN Map=3
950   ON Ans GOSUB Gen,Gen,Thermal,Copy
960   GOTO Options
970 Gen:  DISP "LOADING GENERAL CIRCUIT BOARD PROGRAM "
980  LOAD "BOARDS",1
990  STOP
1000 Thermal:DISP "WORKING LOADING THERML "
1010 LOAD "THERML",10
1020 STOP
```

```
1030 Copye:GOSUB Error
1040 Copy: ! THIS SECTION FOR PROGRAM REPRODUCTION ONTO ANOTHER MASS STORAGE
1050 ON ERROR GOTO Copye
1060 S$="COPYING THERMELEX PROGRAMS"
1070 GOSUB Pagehead
1080 PRINT "   This section allows easy reproduction of THERMELEX from one mass
storage"
1090 PRINT "device to another.  The mass storage medium (tape or disk) must be i
nitialized."
1100 PRINT "If the medium intended as the destination is new or you wish to eras
ae all"
1110 PRINT "files then the use of option 2 will perform this task.  Since the TH
ERMELEX"
1120 PRINT "system requires only approximately 500 records,it is possible to use
a medium"
1130 PRINT "that already contains files to be retained; however, this may not al
low"
1140 PRINT "sufficient space for the data files containing the circuit board des
criptions."
1150 PRINT "Option 1 will record in the available spaces if possible but it is r
ecommended"
1160 PRINT "that an entire mass storage media be devoted to THERMELEX."
1170 PRINT LIN(1),"YOUR OPTIONS ARE:";
1180 PRINT "   1. COPY ALL PROGRAMS WITHOUT INITIALIZATION."
1190 PRINT LIN(1),SPA(20),"2. COPY ALL PROGRAMS AFTER INITIALIZATION."
1200 Ans$="1"
1210 INPUT "YOUR CHOICE FROM ABOVE (1 or 2)",Ans$
1220 IF Ans$="BACK_UP" THEN Options
1230 Ans=INTVAL(Ans$)
1240 IF (Ans=1) OR (Ans=2) THEN 1270
1250 GOSUB Errin
1260 GOTO Copy
1270 Ans$=Msus1$
1280 EDIT "WHAT MASS STORAGE DEVICE CONTAINS THE THERMELEX SYSTEM  :T15,:T14,:F8
,ETC)",Ans$
1290 IF Ans$="BACK_UP" THEN Copy
1300 IF Ans$[1,1]<>":" THEN Ans$=":"&Ans$
1310 Msus1$=Ans$
1320 Ans$=":T14"
1330 EDIT "WHAT MASS STORAGE DEVICE CONTAINS THE DESTINATION MEDIUM (:T14,:T15,:
F8,ETC)",Ans$
1340 IF Ans$="BACK_UP" THEN Copy
1350 IF Ans$[1,1]<>":" THEN Ans$=":"&Ans$
1360 IF Ans$=Msus1$ THEN 1450
1370 BEEP
1380 PRINT PAGE,LIN(10),SPA(10),"HOW CAN I COPY FROM ";Msus1$;" TO ";Ans$
1390 PRINT SPA(10),"TRY AGAIN"
1400 WAIT 2000
1410 BEEP
1420 WAIT 1500
1430 BEEP
1440 GOTO Copy
1450 Msus2$=Ans$
1460 IF Ans=1 THEN Copy2
1470 BEEP
1480 PRINT PAGE,LIN(10),TAB(15),"                                        "
1490 PRINT
1500 PRINT TAB(15),"****************WARNING****************"
```

AUTOST .. DRIVER FOR THERMELEX

```
1510 PRINT LIN(2)
1520 PRINT TAB(15),"THIS PROGRAM WILL ERASE ALL FILES ON ";Msus2$
1530 PRINT LIN(2),TAB(15),"                                    "
1540 PRINT LIN(1),SPA(10),"USE KEY0 TO  BACK UP  IF THIS IS NOT YOUR DESIRE"
1550 PRINT LIN(1),SPA(20),"PRESS CONT IF THIS IS OK ....."
1560 WAIT 200
1570 BEEP
1580 INPUT Ans$
1590 IF Ans$="BACK_UP" THEN Copy
1600 DISP "WORKING INITIALIZING ";Msus2$
1610 INITIALIZE Msus2$
1620 IF Msus2$[2,2]<>"T" THEN Copy2
1630 DISP "WORKING SETTING UP ";Msus2$
1640 CREATE "DUMMY"&Msus2$,420
1650 CREATE "ENDSPA";Msus2$,1
1660 PURGE "DUMMY"&Msus2$
1670 Copy2:! IN THIS SECTION THE ACTUAL COPYING TAKES PLACE
1680 RESTORE 1750
1690 FOR I=1 TO 8
1700 READ Nam$
1710 COPY Nam$&Msus1$ TO Nam$&Msus2$
1720 DISP "COPYING ";Name$;" FROM ";Msus1$;" TO ";Msus2$
1730 WAIT 1500
1740 NEXT I
1750 DATA BDSKEY,STDKEY,DEMO-T,DEMO-P,AUTOST,BOARDS,THERML,TNAMES
1760 RETURN
1770 !
1780 Setstoe:GOSUB Error
1790 Setsto:! THIS SECTION DETERMINES WHERE THE THERMELEX SYSTEM IS AND SETS
1800         ! MASS STORAGE TO THAT PLACE
1810 ON ERROR GOTO Setstoe
1820 S$="LOCATION OF THE THERMELEX SYSTEM"
1830 GOSUB Pagehead
1840 PRINT "     It is necessary that the mass storage media that contains the TH
ERMELEX"
1850 PRINT "system be located in the default mass storage device.  Therefore, th
e default"
1860 PRINT "mass storage will be converted by the program.  This should not be a
ltered"
1870 PRINT "during the use of THERMELEX.  Data files located on other mass stora
ge devices"
1880 PRINT "may be accesed by appending the appropriate device code to the file
name."
1890 Ans$=":T15"
1900  EDIT "CHANGE OR ENTER BELOW THE LOCATION OF THERMELEX ?",Ans$
1910  Ans$=UPC$(Ans$)
1920  IF Ans$[1,1]<>":" THEN Ans$=":"&Ans$
1930  IF (Ans$[2,2]="F") OR (Ans$[2,2]="T") OR (Ans$[2,2]="Y") OR (Ans$[2,2]="Z"
) THEN 1970
1940  BEEP
1950  GOSUB Errin
1960  GOTO Setsto
1970  Msus1$=Ans$
1980  MASS STORAGE IS Msus1$
1990  RETURN
2000 Overlay: ! THIS SECTION PREPARES AN OVERLAY FOR THE USER
2010 Ans$="Y"
2020 INPUT "DO YOU DESIRE A PAPER KEY-CODE OVERLAY (Y OR N)?",Ans$
```

AUTOST .. DRIVER FOR THERMELEX

```
2030 IF (UPC$(Ans$)="N") OR (Ans$="BACK_UP") THEN RETURN
2040 PRINTER IS 0
2050 PRINT SPA(15),"TEAR OFF FOR GENERAL PURPOSE KEY CODE OVERLAY ",LIN(2)
2060 PRINT "|Back_up| EXIT  | ENTER |  DUMP  | PRT IS|PRT IS | REWND | REWND |
     PLACE"
2070 PRINT "|  key  |GRAPHIC|GRAPHIC|GRAPHIC |   16  |   0   |  :T14 |  :T15 |
  ABOVE KEYS"
2080 PRINT "TEAR HERE --------------------------- THEN PRESS CONT ---"
2090 PRINT LIN(1)
2100 PAUSE
2110 PRINT "| <<S>  |       |       |       |       | EDIT  |  YES  |  NO   |
    PLACE"
2120 PRINT "|       |       |       |       |       | LINE  |       |       |
  BELOW KEYS"
2130 PRINT LIN(2)
2140 PRINTER IS 16
2150 RETURN                                                    ! END OF Overlay
2160 !
2170 Pagehead:! THIS SECTION PLACES DESIRED HEADING ON A BLANK CRT
2180 PRINT PAGE,TAB(34-LEN(S$)/2),"** ";CHR$(132);S$;CHR$(128);" **",LIN(2)
2190 RETURN
2200 Errin:! THIS SECTION ALERTS THE USER TO AN ATTEMPT TO INPUT INVALID DATA
2210 BEEP
2220 PRINT PAGE
2230 DISP "INPUT OUT OF RANGE.......TRY AGAIN"
2240 WAIT 2500
2250 BEEP
2260 WAIT 1500
2270 BEEP
2280 RETURN                                                    ! END OF Errin
2290 Error:!
2300 PRINTER IS 16
2310 PRINT LIN(10),TAB(20),"ERROR NUMBER ";ERRN;"HAS OCCURED IN LINE ";ERRL
2320 DISP "PRESS CONTINUE WHEN READY TO RESUME PROGRAM FLOW"
2330 PAUSE
2340 !
2350 Pagecrt:! THIS SECTION BREAKS THE INSTRUCTIONS INTO PAGES FOR THE CRT
2360 DISP "Press CONT when ready for more instructions"
2370 PRINT LIN(Blanks)
2380 PAUSE
2390 RETURN
2400 !
2410 Pageprt:! THIS SECTION BREAKS THE PRINTED INSTRUCTIONS INTO PAGES
2420 PRINT LIN(Blanks)
2430 PRINT TAB(35),"Pg. ";Pagenum
2440 PRINT LIN(1),"__
                    "
2450 IF Pagenum>5 THEN RETURN
2460 PRINT LIN(4),TAB(37-LEN(S$)/2);CHR$(132);S$;CHR$(128);TAB(76);"Pg.";Pagenum
+1,LIN(2)
2470 RETURN
2480 !
2490 Inste:GOSUB Error
2500 Inst:! THIS SECTION PREPARES A SET OF WRITTEN INSTRUCTIONS FOR THE USER
2510 ON ERROR GOTO Inste
2520 S$="INSTRUCTIONS FOR USE OF THERMELEX"
2530 GOSUB Pagehead
2540 PRINT "     A written set of instructions can be prepared for the user that
will help"
```

```
2550 PRINT "one to become familiar with the THERMELEX system without actually us
ing the "
2560 PRINT "the computer.  These are intended to only supplement the set of dire
ctions"
2570 PRINT "given during the execution of the system of programs.  These instruc
tions will"
2580 PRINT "normally be presented on the screen but if you desire a hard copy of
 the"
2590 PRINT "instructions, ENTER YPRT rather than Y."
2600 Ans$="N"
2610 INPUT "DO YOU DESIRE PRINTED INSTRUCTIONS (N or Y OR YPRT)?",Ans$
2620 IF Ans$="BACK_UP" THEN RETURN
2630 IF (UPC$(Ans$[1,1])="Y") OR (UPC$(Ans$)="N") THEN 2660
2640 GOSUB Errin
2650 GOTO Inst
2660 IF UPC$(Ans$)="N" THEN RETURN
2670 PRINTER IS 16
2680 PRINT PAGE
2690 IF UPC$(Ans$[1,2])="YP" THEN PRINTER IS 0
2700 P=16
2710 IF UPC$(Ans$[1,2])="YP" THEN P=0
2720 PRINT LIN(4),TAB(37-LEN(S$)/2),"** ";CHR$(132);S$;CHR$(128);" **",LIN(2)
2730 PRINT "     The THERMELEX system is designed to perform thermal analysis of
air cooled"
2740 PRINT "electronic circuit boards.  The system consists of three major progr
ams:"
2750 PRINT
2760 PRINT LIN(1),TAB(17),"1. AUTOST   Driver and system setup."
2770 PRINT LIN(1),TAB(17),"2. BOARDS   Input and recording of data."
2780 PRINT LIN(1),TAB(17),"3. THERML   Analysis and output of results."
2790 PRINT LIN(1)
2800 PRINT "The AUTOST program establishes special key deffinitions and acts a
s the driver"
2810 PRINT "for the other programs within the THERMELEX system.  The key deffini
tions are "
2820 PRINT "valid throughout the system except when entering the specific compon
ent type"
2830 PRINT "codes during execution of BOARDS . "
2840 Blanks=0
2850 IF P=16 THEN GOSUB Pagecrt
2860 PRINT
2870 PRINT "     This driver program is entered by placing the tape in the primar
y tape"
2880 PRINT "transport (:T15) at the right side above the special keys.  You then
:",LIN(1)
2890 PRINT TAB(10),"TYPE: LOAD ";CHR$(34);"AUTOST:T15";CHR$(34);",1      Then Pre
ss  EXECUTE    "
2900 PRINT
2910 PRINT "If the 9845A is off, the driver may be loaded by inserting the tape
in :T15,"
2920 PRINT "latching the AUTO ST key in the down position, and turning the power
 on."
2930 PRINT "In either case the first question will be concerning the location of
 the "
2940 PRINT "THERMELEX system.  The program will convert the default mass storage
 device"
2950 PRINT "to what ever device contains the system.  It is important to not cha
nge this"
```

```
2960 PRINT "while using THERMELEX.  These instructions may be provided on paper
or CRT and"
2970 PRINT "a paper keycode overlay may be provided as a guide to the key deffin
itions"
2980 PRINT "that is loaded by AUTOST.  A plastic overlay is available from Hew
lett-Packard"
2990 PRINT "(part # 7120-6164) which may be filled in using the paper overlay as
 a guide."
3000 PRINT "The other programs are entered from the option selection list (Menu)
in AUTOST."
3010 PRINT "Normally BOARDS is next loaded to allow the input of circuit board
 descriptive"
3020 PRINT "data from the keyboard.  The instructions that follow apply to this
option."
3030 PRINT
3040 Blanks=4
3050 IF P=16 THEN GOSUB Pagecrt
3060 PRINT "    The user should have either the circuit board or a facsimile ava
ilable"
3070 PRINT "while he is using the BOARDS program.  Orient the board such that
the cooling"
3080 PRINT "air flow is from the left to the right.  Measure the length (defined
 in the air"
3090 PRINT "flow direction), width and thickness of the circuit board in millime
ters (mm)."
3100 PRINT "It is necessary to divide the board into equal spaced imaginary reg
ions in both"
3110 PRINT "horizontal and vertical directions.  The centers of each of these re
gions will"
3120 PRINT "form the nodes of a finite difference grid to be used in the thermal
 analysis"
3130 PRINT "of the electronic circuit board.  The imaginary lines that are creat
ed divide"
3140 PRINT "the circuit board into regions that will either be empty or will con
tain one"
3150 PRINT "component.  An exception to this rule is the case of 40 pin DIP s wh
ich occupy"
3160 PRINT "two regions due to their large size.  An attempt to approximate the
real circuit"
3170 PRINT "board with a model requires some flexibility and imagination at this
 point."
3180 PRINT
3190 PRINT "    The thermal model used for the analysis will assume that each co
mponent is"
3200 PRINT "centered in the region.  The following components can be included:"
3210 PRINT
3220 PRINT "          DIPS (horizontal or vertical)          CHIP CARRIERS "
3230 PRINT "                14,16,24,40 pins                 16,24,40,64 pins"
3240 PRINT
3250 Pagenum=1
3260 Blanks=4
3270 IF P=0 THEN GOSUB Pageprt
3280 IF P=16 THEN GOSUB Pagecrt
3290 PRINT "The limitations imposed by restricting the components to the list ab
ove will "
3300 PRINT "prevent some circuit boards from being precisely modeled using THERM
ELEX but "
3310 PRINT "are necessary to provide for the simple input of the descriptive dat
a."
```

```
3320 PRINT
3330 PRINT "    When BOARDS is loaded using option #1 in AUTOST a control pa
rameter is"
3340 PRINT "assigned which causes the program to begin at the section which asks
 for the"
3350 PRINT "geometric parameters of the bare circuit board.  You will be asked t
o enter the"
3360 PRINT "length of the board in millimeters.  Enter the length using either t
he number"
3370 PRINT "pad at the far right of the keyboard or the numbers above the letter
 keys"
3380 PRINT "followed by the CONT Key.  The next question will appear at the bo
ttom of the"
3390 PRINT "screen while the length that was just entered will be printed immedi
atly below"
3400 PRINT "the instructions.  Answer each question remembering to use the CONT
 Key and"
3410 PRINT "check the values on the screen.  If a mistake is made press K0 and
 the program"
3420 PRINT "will ask the question again.  After the length, height, thickness, c
onductivity,"
3430 PRINT "number of regions in the 'X' direction and the number of regions in
the 'Y' "
3440 PRINT "direction have been entered, the program will ask for a short (less
than 50 "
3450 PRINT "characters) descriptive title.  This title will become part of the d
ata set for"
3460 PRINT "the circuit board and will be used to identify the output.  Two e am
ples are:"
3470 PRINT
3480 PRINT SPA(5),"TEST BOARD FOR PROJECT UMPTYFRATS   or  DESCRIPTIVE TITLE
#1234.9A ."
3490 Blanks=0
3500 IF P=16 THEN GOSUB Pagecrt
3510 IF P=0 THEN PRINT
3520 PRINT "    The screen will now shift from the alpha mode to the graphics mo
de and draw"
3530 PRINT "an empty board with the imaginary regions marked off with dotted lin
es.  This"
3540 PRINT "picture will remain on the screen for only 3 sec after it is drawn b
ut it may"
3550 PRINT "be returned to the screen using K2 to allow further time for check
ing."
3560 PRINT "K1 will return the screen to the alpha mode for the ne t section."
3570 IF P=0 THEN PRINT
3580 PRINT "    The special function keys will now be used to input the contents
 of each of"
3590 PRINT "the regions defined on the blank board.  This is the last chance to
use the "
3600 PRINT "Back-up option (K0) if the board is not correct.  A new Key code ove
rlay will"
3610 PRINT "be provided if necessary and must replace the general purpose overla
y on the"
3620 PRINT "keyboard.  The keys defined in this section act as priority interrup
ts and will"
3630 PRINT "allow the screen to remain in the graphics mode as the components ar
e defined."
3640 PRINT "A flashing cross will move to each region in sucession and wait for
a valid"
```

```
3650 PRINT "key to be pressed.  Every region must be defined even if empty.  It
is "
3660 PRINT "important to wait for the cursor to move to the next empty region be
fore keys"
3670 PRINT "are pressed.  The back-up option will NOT work while defining comp
onents but"
3680 PRINT "there will be an opportunity to make corrections in the next section
."
3690 PRINT "When all regions have been defined, the screen will return to the al
pha mode to"
3700 PRINT "ask if there are any corrections.  At this point k2 will return the
graphics"
3710 PRINT "to the screen and k1 will return the alpha mode to the screen."
3720 Blanks=0
3730 IF P=16 THEN GOSUB Pagecrt
3740 PRINT
3750 PRINT "To make corrections, the numbers of ALL incorrect regions are ente
red and the"
3760 PRINT "components erased.  When there are no more to be removed, pressing
CONT with"
3770 PRINT "no entry will allow all empty regions to be redefined.  A flashing c
ross will"
3780 PRINT "visit each empty region followed by further correction opportunit a
s needed."
3790 PRINT "When the board is correct, the general purpose key deffinitions are
returned"
3800 PRINT "and the normal key code overlay should be replaced.  "
3810 PRINT
3820 Pagenum=2
3830 Blanks=11
3840 IF P=0 THEN GOSUB Pageprt
3850 PRINT "    DIP components generally are produced in two different case styl
es, ceramic"
3860 PRINT "or plastic.  These are different sizes and this affects the thermal
analysis"
3870 PRINT "performed in THERML.  The next section provides several methods to
 specify the"
3880 PRINT "case styles for the DIP's.  These are: 1) all plastic...2) all ceram
ic..."
3890 PRINT "3) majority ceramic (user specify which are plastic)...4) majority c
eramic (user"
3900 PRINT "specify which are ceramic)...5) user specify case style for each DIP
 component."
3910 PRINT "In general, option 3 or 4 require the user to input the number of re
gions that"
3920 PRINT "are either plastic or ceramic and are useful for specifying the styl
e when"
3930 PRINT "when only a few are different.  When there is a nearly equal mix, op
tion 5"
3940 PRINT "requires a 1 for plastic style and a 0 for ceramic style.  After all
 DIP's are"
3950 PRINT "specified,  a list of region numbers is displayed on the screen (in
alpha mode)"
3960 PRINT "with the plastic cases in inverse video (numbers black on light back
round) and"
3970 PRINT "ceramic cases in normal video.  Correct as needed and again no corre
ctions is"
3980 PRINT "indicated by pressing CONT key with no entry."
```

```
3990 IF P=0 THEN 4040
4000 DISP "PRESS CONT WHEN READY FOR ANOTHER PAGE OF INSTRUCTIONS"
4010 PRINT LIN(2)
4020 PAUSE
4030 GOTO 4050
4040 PRINT
4050 PRINT "    The next section concerns the thermally conductive paths that ar
e added "
4060 PRINT "to the circuit board.  Both the electrical conductors and any therma
l conduction"
4070 PRINT "paths or rails will transfer heat between regions.  When any conduct
ion "
4080 PRINT "rails are present, the effects of the electrical leads will be negli
gable and"
4090 PRINT "ignored.  To aid in the modeling of the conduction rails it is neces
sary to"
4100 PRINT "introduce the concept of a Conduction Path Unit (CPU).  Each of the
rails is"
4110 PRINT "modeled as containing an integer number CPU's.  The width of a CPU i
s defined "
4120 PRINT "to be .1 mm while the user must define the thickness (mm) and therma
l"
4130 PRINT "conductivity (Watts M-C) of the material that forms the conduction r
ails."
4140 PRINT "The thermal conductivities of several aluminum alloys and copper are
 presented"
4150 PRINT "to aid the user.  If there are no conduction rails present, the elec
trical lead"
4160 PRINT "description is entered in the much the same way; thickness (mm), ave
rage width"
4170 PRINT "(mm) and the conductivity (Watts/M-C).  This will default to 384 Wa
ts/M-C, the"
4180 PRINT "value for copper. This is the most commom material for traces on cir
cuit boards."
4190 IF P=0 THEN 4240
4200 PRINT LIN(2)
4210 DISP "PRESS CONT WHEN READY FOR ANOTHER PAGE OF INSTRUCTIONS"
4220 PAUSE
4230 GOTO 4250
4240 PRINT
4250 PRINT "    In the next section the numbers of leads or CPU's that cross the
interior"
4260 PRINT "boundaries between regions are entered.  The display will alternate
between"
4270 PRINT "the graphics and the alpha mode with the flashing cross or cursor mo
ving to the"
4280 PRINT "appropriate location on the board to be defined.  The graphics will
remain on"
4290 PRINT "the screen for two seconds and then return to the alpha mode for an
input line."
4300 PRINT "It will ask for the input of the number of leads or CPU s between tw
o specific"
4310 PRINT "regions; ie if the conduction rail is 6.7 mm wide, there are 67 CPU
s in that"
4320 PRINT "path.  Special function key 3 (k3) may be used to dump the graphics
to the"
4330 PRINT "printer for a hard copy of the graphics picture. It is important to
account"
```

```
4340 PRINT "for the leads on both sides of the circuit board when entering this
number."
4350 PRINT "As before follow all entries with the CONT key.  Because of the pr
ogram flow"
4360 PRINT "in this section, the Back_up option (k0) will not function.  Do not
attempt to"
4370 PRINT "make corrections or return to a previous section until after all ent
ries have"
4380 PRINT "been made.  All corrections will be made in the next section."
4390 PRINT
4400 PRINT "    In the thermal model used by the THERMELEX system, all heat is t
ransfered"
4410 PRINT "to the cooling air stream.  None of the heat is transferred out the
edges of"
4420 PRINT "the circuit board.  For this reason, the sides of the regions at the
 edges"
4430 PRINT "will be labeled with 0 to indicate that no leads or CPU's cross this
 boundary."
4440 PRINT "When this heat loss from the board edges and connector is neglected,
 the results"
4450 PRINT "will be conservative.  These assumptions may be unacceptable for cir
cuit boards"
4460 PRINT "used in installations where a significant fraction of the total heat
 dissipated"
4470 PRINT "is conducted away from the board through card guides or connectors."
4480 PRINT
4490 Pagenum=3
4500 Blanks=6
4510 IF P=0 THEN GOSUB Pageprt
4520 PRINT "    When all regions have been specified, the screen will return to
the alpha"
4530 PRINT "mode and ask if any corrections are needed.  Use the special functio
ns keys"
4540 PRINT "as required to either return to graphics/alpha or produce a hard cop
y.  Enter"
4550 PRINT "the numbers of the connecting regions that have incorrect values for
 the numbers"
4560 PRINT "of leads or CPU's.  As before, CONT with no entry signals the lack
 of further"
4570 PRINT "corrections.  The physical description of the circuit board is now c
omplete."
4580 PRINT "All that remains is to specify either the component power levels (Wa
tts) or the"
4590 PRINT "junction temperatures for each component."
4600 PRINT
4610 PRINT "    When the maximum junction temperatures for the components are sp
ecified,"
4620 PRINT "the maximum steady state power level that will result in that temper
ature is"
4630 PRINT "calculated for each component.  When the steady state power of each
component"
4640 PRINT "is specified, the steady state junction temperatures are calculated.
"
4650 PRINT "In either situation it is also necessary to specify the case to junc
tion"
4660 PRINT "thermal resistance Rj_c (Deg C/Watt).  The thermal model uses the co
mponent"
4670 PRINT "surface temperatures for heat transfer calculations and Rj_c provide
s the link"
```

```
4680 PRINT "between the component power, junction temperature and the surface te
mperature."
4690 PRINT "If Rj_c is specified as zero (0) then the case surface temperature w
ill be"
4700 PRINT "equal to the junction temperature."
4710 PRINT
4720 PRINT "    After all component power levels or junction temperatures ha e b
een set,"
4730 PRINT "the complete list is displayed in the alpha mode to allow checking a
nd"
4740 PRINT "changes.  Corrections are inserted by entering the incorrect region
number then"
4750 PRINT "entering the correct values in responce to the question asked.  If d
esired"
4760 PRINT "a hard copy of all data for the circuit board will be provided from
the printer."
4770 PRINT
4780 PRINT "    The next section allows recording of the circuit board descriptt
ve data "
4790 PRINT "on to a mass storage media.  This should be done.  The recorded data
 file may be"
4800 PRINT "accessed at some later time either in BOARDS for editing and chang
es or"
4810 PRINT "directly in THERML to perform the thermal analysis.  BOARDS will
 create the "
4820 PRINT "the necessary data file to record the description but if a data file
 of"
4830 PRINT "sufficient size exists, it may be used.  All old data in that file w
ill"
4840 PRINT "be permanently lost.  Information concerning the minimum data file s
ize is"
4850 PRINT "presented by the program to help in this decision. "
4860 PRINT
4870 PRINT "    Built in error traps througnout the entire THERMELEX system will
 save the "
4880 PRINT "user from loss of previous inputs in case of errors.  Information ab
out the"
4890 PRINT "error is presented and using the error message guide on the plastic
slide outs"
4900 PRINT "below the screen, the user may be able to make corrections.  When re
ady, as"
4910 PRINT "signaled by CONT key, program flow returns to a previous point and
 operation"
4920 PRINT "resumes. The data recording section where file names are entered is
particularly"
4930 PRINT "prone to spelling errors or entry of incorrect mass storage unit spe
cifiers."
4940 PRINT "Be careful but remember th system will attempt to catch those inevit
able errors"
4950 PRINT "and act on them before they become fatal."
4960 PRINT
4970 PRINT "   The end of a cycle through BOARDS is now complete.  As the page
 heading"
4980 PRINT "that will appear states, WHAT NOW ?.  More work with BOARDS is pos
sible.  The"
4990 PRINT "user may either input another circuit board description from the new
board and"
5000 PRINT "record that to mass storage; or, he may retrieve a different circuit
 board"
```

```
5010 PRINT "descriptive data set from mass storage for checking and corrections.
"
5020 PRINT "Another option is to perform the thermal analysis of the circuit boa
rd using"
5030 PRINT "the third program in the THERMELEX system, THERML."
5040 PRINT
5050 Pagenum=4
5060 Blanks=6
5070 IF P=0 THEN GOSUB Pageprt
5080 PRINT "    Before an explanation of the program flow in THERML, some e pl
anation of"
5090 PRINT "the use of BOARDS to edit previously recorded data files is in ord
er.  This"
5100 PRINT "option may be accessed through the use of AUTOST as e plained on th
e first page"
5110 PRINT "of these instructions or the BOARDS program may be directly entere
d into the"
5120 PRINT "computer with the command:     LOAD ";CHR$(34);"BOARDS:T15,1";CHR$(3
4);"        then Press EXECUTE "
5130 PRINT
5140 PRINT "Of course the appropriate mass storage specifier should be used both
 here and"
5150 PRINT "when entering the file name for any previously recored data file.  S
ee the "
5160 PRINT "Operating and Programming Manual for the 9845 if the above is not cl
ear."
5170 PRINT
5180 PRINT "   Following the input of the file name that contains the descriptiv
e data,"
5190 PRINT "the data file will be read and all the variables that are normally s
et from"
5200 PRINT "the keyboard will be defined.  The circuit board will be drawn on th
e screen"
5210 PRINT "in graphics mode and changes to the specific components that occupy
the regions"
5220 PRINT "may be made.  However; it is not possible to change the number of re
gions in"
5230 PRINT "any way.  This major revision of the board must be done as a new boa
rd input."
5240 PRINT "Correction to case styles is next and then the numbers of leads or C
PU's "
5250 PRINT "between regions will be labeled on to the graphics picture of the ci
rcuit board"
5260 PRINT "Changes will be allowed to the numbers but not the physical sizes of
 the leads"
5270 PRINT "or CPU's;  this also requires a new board input.  A list of power le
vels,"
5280 PRINT "junction temperature and case to junction thermal resistances is pre
sented"
5290 PRINT "for checking and corrections as required.  This edited descriptive d
ata set may"
5300 PRINT "then be recorded either back to the same data file or to a new file.
"
5310 PRINT
5320 PRINT "   There are two demonstration data files included in the THERMELEX
system."
5330 PRINT "DEMO-T contains a typical circuit board description needed to dete
rmine the"
```

```
5340 PRINT "steady state junction temperature (ie component power levels are spe
cified)."
5350 PRINT "DEMO-P contains a different circuit board for which maximum powers
 levels are "
5360 PRINT "determined in the thermal analysis.  The use of either of these can
be helpful"
5370 PRINT "to familiarize the user with both BOARDS and the last program in t
he THERELEX"
5380 PRINT "system, THERML."
5390 PRINT
5400 PRINT "   THERML creates the mathematical model, performs the analysis of
 the circuit"
5410 PRINT "board and produces the output.  The variables used in the thermal mo
del are set"
5420 PRINT "using either a data file from mass storage or they are passed in a c
ommon block"
5430 PRINT "when THERML is loaded from BOARDS.  There are no correction oppo
rtunities"
5440 PRINT "for the circuit board descriptive variables in this program."
5450 PRINT
5460 PRINT "    Assuming that THERML has been loaded from the What Now option
list in "
5470 PRINT "BOARDS, the first input is the inlet temperature(deg C) of the coo
ling air."
5480 PRINT "After this is entered and printed on the screen, the volumetric air
flow"
5490 PRINT "rate (M^3/sec) is requested.  Since the same set of general purpose
special"
5500 PRINT "function keys are valid in this program, the keycode overlay should
remain and"
5510 PRINT "k0 (Back-up) may be used to return to a previous question when input
 errors are"
5520 PRINT "made.  The next input is the spacing betwen the circuit boards for
rack mounts."
5530 PRINT "This spacing and the board height determines the size of the immagin
ary air duct"
5540 PRINT "containing the circuit board.  When combined with the amount of air
flow for"
5550 PRINT "each circuit board the air velocity and heat transfer correlations a
re"
5560 PRINT "determined.  Since all the power dissipated on the circuit board mus
t be"
5570 PRINT "removed by the air flow, it is important for these values to be as p
recise"
5580 PRINT "as possible.  After the thermal analysis is complete, there will be
opportunites"
5590 PRINT "to alter these important air flow paramters and examine the effects
on the"
5600 PRINT "output."
5610 PRINT
5620 Pagenum=5
5630 Blanks=6
5640 IF P=0 THEN GOSUB Pagepr
5650 PRINT "    Before the analysis begins, the convergence criteria must be set
.  The"
5660 PRINT "analysis consists of assuming a solution then defining a set of simu
taneous"
5670 PRINT "equations (one for each region) which are solved for either the powe
r"
```

```
5680 PRINT "on the junction temperatures.  The results are compared to the pre
ous results"
5690 PRINT "(the assumed values for the first itteration) and if the largest dif
ference"
5700 PRINT "between these values is less than a maximum set by the user, the res
ults are"
5710 PRINT "presented in graphics.  If the convergence criteria is not met, the
results"
5720 PRINT "are printed to the screen in alpha mode and another itteration is en
tered. "
5730 PRINT "The closer to zero one sets the convergence criteria, the longer the
 process"
5740 PRINT "takes.  Default values for the convergence criteria are .5 Deg C or
1% change in"
5750 PRINT "power.  These typically require 2 to 6 itterations before they are m
et.  Each"
5760 PRINT "itteration takes 5 to 100 sec to perform depending on the number of
regions."
5770 PRINT "As the solution proceeds the user may view the intermediate results
to watch"
5780 PRINT "the progress."
5790 PRINT
5800 PRINT "    The final results are written onto a picture of the circuit boar
d with"
5810 PRINT "each region containing component type, junction temperature, power l
evel and"
5820 PRINT "case temperature.  Empty regions contain only the temperature of the
 circuit"
5830 PRINT "board.  Those junction temperatures within 5% of the maximum and tho
se power"
5840 PRINT "levels within 5% of the minimum are starred *** for easy reference
as trouble"
5850 PRINT "spots.  This graphics output is automatically dumped to the printer
to insure"
5860 PRINT "that a hard copy of the results exist."
5870 PRINT
5880 PRINT "    This completes a cycle through THERML and again the question i
s What Now ?"
5890 PRINT "BOARDS may be returned to done, to make changes to the circuit boa
rd or"
5900 PRINT "to enter a new circuit board.  Another analysis of the same circuit
board"
5910 PRINT "may be done with a new set of air flow paramters or, a new circuit b
oard"
5920 PRINT "descriptive data set may be read in from mass storage with THERML.
"
5930 PRINT
5940 PRINT "    An additional option is sensitivity analysis.  Plots of the ma x
mum "
5950 PRINT "Tjunc vs. Air Flow Rate or the minimum Power vs. Air Flow Rate may b
e produced."
5960 PRINT "A maximum air flow rate is specified and five separate analyses are
performed"
5970 PRINT "and the results plotted and dumped to the printer.  The maximum air
flow rate"
5980 PRINT "specified should be an integer multiple of five to make for better l
ooking axes."
5990 PRINT "It is also possible to produce hard copys of the printed results for
 each of the"
```

```
6000 PRINT "air flow rates.  Upon completion of this sensitivity analysis, progr
am flow"
6010 PRINT "returns to the option list previously discussed."
6020 PRINT
6030 PRINT "    Termination should be done under program control using the final
 option."
6040 PRINT "This will insure that the standard key definitions are returned and
that the"
6050 PRINT "proper graphics parameters are set for the next user of the computer
."
6060 PRINT LIN(2),TAB(32),"GOOD LUCK"
6070 Pagenum=6
6080 Blanks=16
6090 IF F=0 THEN GOSUB Pageprt
6100 PRINTER IS 16
6110 RETURN
```

APPENDIX C

```
5     !        BOARDS        ..... DATA INPUT AND STORAGE PROGRAM FOR ....
10    !
15    ! ********************        THERMELE        ************************
20    !
25    !                A SYSTEM OF PROGRAMS FOR THE HP 9845
30    !
35    !        TO PERFORM THERMAL ANALYSIS OF ELECTRONIC CIRCUIT BOARDS
40    !
45    ! ***********************************************************************
50    ! *                                                                     *
55    ! *                                                                     *
60    ! *        PREPARED AT THE NAVAL POSTGRADUATE SCHOOL MONTEREY CA        *
65    ! *                                                                     *
70    ! *                        R. A. FOLTZ LCDR USN                         *
75    ! *                                                                     *
80    ! *                        |||||  BOARDS  |||||          ..... JUNE 1980 *
85    ! ***********************************************************************
90    !
95    OPTION BASE 1
100   PRINTER IS 16
105   COM Map,Name$,Pictlbl$[50],Case$[50],Bdl,Bdh,Sca,Thick_b,Tem_sol,Kb,Al,Kl
110   COM SHORT X(50),Y(50),Tj(50),Pow(50),Rj_c(50)
115   COM INTEGER Itype(50),Nl(4,50),Nxr,Nyr,Nneg
120   SHORT Le(50),We(50)
125   INTEGER Npin(50)
130   DIM S$[70],Msus$[22]
135   IF Map=0 THEN Start
140 Start_over: ON Map GOTO Oldpict_correct,Bdpict,Oldpict
145   DISP "MAP= ";Map
150   PAUSE
155 Starte: GOSUB Error
160 Start: S$="THERMAL ANALYSIS PROGRAM FOR ELECTRONIC CIRCUIT BOARDS
165   ON ERROR GOTO Starte
170   GOSUB Pagehead
175   PRINT "  This program allows the user to input a detailed description of an
 electronic"
180   PRINT "circuit board and perform a thermal analysis to predict either the s
teady state"
185   PRINT "temperatures of the components if power levels are given on the comp
onent power"
190   PRINT "level that will result in the steady state temperature specified by
the user."
195   PRINT "The description can come from a data file previously created by this
 program"
200   PRINT "or can be entered at this time."
205   Ans$="N"
210   INPUT "DO YOU DESIRE TO RETRIEVE A PREVIOUSLY STORED DESCRIPTION (N OR Y)",
Ans$
215   IF Ans$="BACK_UP" THEN 160
220   IF (UPC$(Ans$[1,1])="N") OR (UPC$(Ans$[1,1])="Y") THEN 235
225   GOSUB Errin
230   GOTO Start
235   IF UPC$(Ans$[1,1])="N" THEN Bdpict
240   GOTO Oldpict
245 Oldpicte: GOSUB Error
250 Oldpict: ! THIS SECTION RETRIEVES A BOARD DESCRIPTION OFF A MASS STORAGE DEV
ICE
255   ON ERROR GOTO Oldpicte
```

(1)

BOARDS .. DATA INPUT FIS THERMELEX

```
260  Olde=PI
265  S$="BOARD DESCRIPTION FROM MASS STORAGE DEVICE"
270  GOSUB Pagehead
275  PRINT "     The data file containing the board description must ha e been st
oned by "
280  PRINT "this program.  Enter the data file name below, be sure to include th
e mass "
285  PRINT "storage unit specifier if needed, eg  :T14,:F3,: 12  etc"
290  EDIT "UNDER WHAT FILE NAME IS THE CIRCUIT BOARD FILED  input or change belo
w)",Name$
295  IF Name$="BACK_UP" THEN 160
300  IF Name$="NULL" THEN Oldplot
305  ASSIGN #5 TO Name$
310  FEC  4,1
315 RE  #5; ame$,Fr  lbl$,Date$,Bdl,Bdw,Bda,N  ,Nrm,Nreg,Thick_b,rb,A  ,r ,Ter_b
ol
320  FOR I=1 TO Nreg
325  READ #5;Ty e I ,  I ,Y I ,Tg I ,Pow I ,Rj_ck I
330  FOR J=1 TO 4
335  READ #5;N  ,T,I
340  NEXT J
345  NEXT I
350 Oldplot_connect: GOSUB Board_plot
355  GRAPHICS
360  FOR I=1 TO Nreg
365  IF I=1 THEN 385
370  IF I<Nr+1 THEN 380
375  IF (Itype I=10) AND  Itype I-N r=10  THEN 400
380  IF (Itype I=9) AND (Itype I-1 =9) THEN 400
385  IF Itype I=0 THEN GOSUB Error
390  IF Itype I)=0 THEN 400
395  ON Itype I GOSUB Hdrb14,Vdrb14,Hdrb16, drb16,Hdrb24,Vdrb24,Error16,Error16
,Hdrp40,Vdrp40,Flat16,Flat24,Flat40,Flat64
400  NEXT I
405  GOSUB Bd_chg
410  IF Ans$="BACK_UP" THEN Oldplot
415  GOSUB Case_type
420  IF Ans$="BACK_UP" THEN 405
425  GOSUB Leads_old
430  IF Ans$="BACK_UP" THEN 415
435  GOSUB Leads_chg
440  IF Ans$="BACK_UP" THEN 425
445  GOSUB Templim
450  IF Ans$="BACK_UP" THEN 435
455  GOSUB Stow
460  IF Ans$="BACK_UP" THEN 445
465  GOSUB What_now
470  IF Ans$="BACK_UP" THEN 455
475  GOTO Start_over
480 Bdplote: GOSUB Error
485 Bdplot:! THIS SECTION IS THE NORMAL ENTRY POINT FOR NEW BOARD INPUT
490  ON ERROR GOTO Bdplote
495  Olde=0
500  S$="KEYBOARD INPUT OF CIRCUIT BOARD DESCRIPTION"
505  GOSUB Pagehead
510 PRINT "     This routine draws a blank circuit board and it  des ra  this regi
ons of "
515 PRINT "interest as determined by the user. There are a  ma  num of 50 regions
 available"
```

AD-A092 309 NAVAL POSTGRADUATE SCHOOL MONTEREY CA F/G 9/3
THERMAL ANALYSIS AND DESIGN OF AIR COOLED ELECTRONIC CIRCUIT BO--ETC(U
JUN 80 R A FOLTZ

UNCLASSIFIED NL

END
DATE
FILMED
DTIC

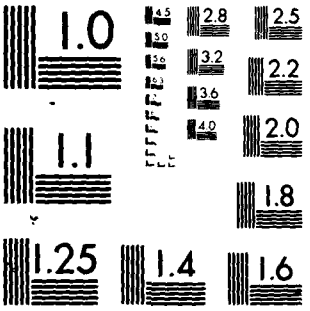

MICROCOPY RESOLUTION TEST CHART
NATIONAL BUREAU OF STANDARDS-1963-A

```
520 PRINT "with one component/region.  The circuit board is then presented on th
e "
525 PRINT "CRT either normal size or scaled up or down by some integer if larger
 or smaller"
530 PRINT "than 120mm by 170mm. The specific components are selected with the us
er keys"
535 PRINT "in the upper right corner of the keyboard.  If you do not have a key
code "
540 PRINT "overlay for the keys the program will provide one for you.  Informati
on to be"
545 PRINT "used in the thermal analysis routine is entered in this section of th
e program."
550 PRINT "You will have the option of recording the board description onto mass
 storage."
555 PRINT
560 PRINT "Conductivity of the board will default to .2942 Watts/M-degK with no
entry."
565 PRINT LIN(1),"NOTE : LENGTH IS DEFINED TO BE IN THE DIRECTION OF AIR FLOW
"
570  MAT Itype=ZER
575  Ans$="NULL"
580  INPUT "WHAT IS THE LENGTH OF THE BOARD IN MILLIMETERS",Ans$
585  IF Ans$="BACK_UP" THEN Start
590  IF Ans$="NULL" THEN 575
595  Bdl=ABS(VAL(Ans$))
600  PRINT LIN(1),TAB(10),"LENGTH =";Bdl;" mm"
605  Scalex=INT(Bdl/171)+1
610  IF Bdl<171/2 THEN Scalex=.5
615  Ans$="NULL"
620  INPUT "WHAT IS THE HEIGHT OF THE BOARD IN MILLIMETERS",Ans$
625  IF Ans$="BACK_UP" THEN Bdpict
630  IF Ans$="NULL" THEN 615
635  Bdh=ABS(VAL(Ans$))
640  PRINT LIN(1),TAB(10),"HEIGHT =";Bdh;" mm"
645  Scaley=INT(Bdh/121)+1
650  IF Bdh<121/2 THEN Scaley=.5
655  Sca=MAX(Scaley,Scalex)    ! SCALE FACTOR TO FILL CRT DISPLAY
660  IF Sca=1 THEN 680
665  IF Sca<1 THEN PRINT LIN(2),"****NOTE****     DUE TO SMALL SIZE OF THE BOA
RD CRT DISPLAY WILL BE 2X SIZE"
670  IF Sca>1 THEN PRINT LIN(2),"****NOTE****     DUE TO LARGE SIZE OF THE BOA
RD CRT DISPLAY WILL BE 1 /";Sca;"SIZE"
675  Ans$="NULL"
680  INPUT "WHAT IS THE NUMBER OF DIVISIONS (REGIONS) IN THE HORIZONTAL DIRECTIO
N",Ans$
685  IF Ans$="BACK_UP" THEN 615
690  IF Ans$="NULL" THEN 675
695  Nxr=ABS(VAL(Ans$))
700  PRINT LIN(1),TAB(10),"# Xreg =";Nxr
705  Ans$="NULL"
710  INPUT "WHAT IS THE NUMBER OF DIVISIONS (REGIONS) IN THE VERTICAL DIRECTION"
,Ans$
715  IF Ans$="BACK_UP" THEN 675
720  IF Ans$="NULL" THEN 705
725  Nyr=ABS(VAL(Ans$))
730  PRINT LIN(1),TAB(10),"# Yreg =";Nyr
735  Nreg=Nxr*Nyr                          ! Nreg = NUMBER OF REGIONS
740  IF Nreg<51 THEN 770
```

```
745  BEEP
750  PRINT PAGE,LIN(15),SPA(30),"TOO MANY REGIONS"
755  WAIT 1000
760  GOSUB Errin
765  GOTO Bdpict
770  Ans$="NULL"
775  INPUT "WHAT IS THE THICKNESS OF THE BOARD?(mm)",Ans$
780  IF Ans$="BACK_UP" THEN 705
785  IF Ans$="NULL" THEN 770
790  Thick_b=ABS(VAL(Ans$))
795  PRINT LIN(1),TAB(10),"Thick  =";Thick_b;" mm"
800  Ans$=".2942"
805  EDIT "WHAT IS THE THERMAL CONDUCTIVITY OF THE BOARD? (WATTS/M -deg K)",Ans$
810  IF Ans$="BACK_UP" THEN 755
815  Kb=ABS(VAL(Ans$))
820  PRINT LIN(1),TAB(10),"Cond_B =";Kb
825  EDIT "INPUT A SHORT (<50 CHARACTERS) WORD DESCRIPTION OF THE CIRCUIT BOARD
HERE ",Pictlbl$
830  IF Pictlbl$="BACK_UP" THEN 800
835  IF LEN(Pictlbl$)<51 THEN 850
840  GOSUB Errin
845  GOTO 825
850  GOSUB Board_pict
855  GOSUB Graphkey
860  IF Ans$="BACK_UP" THEN Bdpict
865  GOSUB Bd_cha
870  IF Ans$="BACK_UP" THEN 850
875  GOSUB Cas$_top
880  IF Ans$="BACK_UP" THEN 865
885  GOSUB Leads
890  IF Ans$="BACK_UP" THEN 875
895  GOTO 435                                                    ! END OF Bdpict
900 Board_picte: GOSUB Error
905 Board_pict: ! THIS SECTION PLACES A BLANK BOARD ON THE SCREEN
910  ON ERROR GOTO Board_picte
915  PLOTTER IS "GRAPHICS"
920  GRAPHICS
925 MSCALE 0,10
930  CSIZE 3
935  LORG 5
940  MOVE 26,130
945  LABEL "---air flow----> "
950  Bdh=Bdh/Sca
955  Bdl=Bdl/Sca
960  LORG 6
965  LDIR PI/2
970  MOVE 175,70
975  IF Sca>1 THEN LABEL "THIS PICTURE IS 1/"&VAL$(Sca)&" SIZE"
980  IF Sca<1 THEN LABEL "THIS PICTURE IS 2X SIZE"
985  LORG 5
990  LDIR 0
995  MOVE 92-LEN(Pictlbl$)/2.135
1000 LABEL USING "K";Pictlbl$
1005 MOVE 0,0
1010 DRAW 0,Bdh
1015 DRAW Bdl,Bdh
1020 DRAW Bdl,0
1025 DRAW 0,0
```

BOARDS .. DATA INPUT FOR THERMELEX

```
1030 LINE TYPE 3
1035 Lr=Bdl/Nxr                                  ! LR = LENGTH OF EACH REGION
1040 Hr=Bdh/Nyr                                  ! HR = HEIGHT OF EACH REGION
1045    FOR I=1 TO Nxr-1
1050    MOVE I*Lr,0
1055    DRAW I*Lr,Bdh
1060  NEXT I
1065    FOR I=1 TO Nyr-1
1070    MOVE 0,I*Hr
1075    DRAW Bdl,I*Hr
1080  NEXT I
1085 LINE TYPE 1
1090 LORG 5
1095 Nr=0
1100    FOR J=Nyr TO 1 STEP -1
1105      FOR I=1 TO Nxr
1110      Nr=Nr+1
1115      X(Nr)=Lr*(I-1)+Lr/2
1120      Y(Nr)=(J-1)*Hr+(I+Hr/2)
1125      MOVE X(Nr),Y(Nr)
1130      LABEL USING "K";VAL$(Nr)
1135    NEXT I
1140  NEXT J
1145 Bdh=Bdh*Sca
1150 Bdl=Bdl*Sca
1155  WAIT 1500
1160  EXIT GRAPHICS
1165 RETURN
1170 Graphkeye: GOSUB Error
1175 Graphkey:! HERE IS SUBROUTINE TO ALLOW INPUT OF BOARD DECRIPTION FROM KEYS
                DATA INPUT
1180 ON ERROR GOTO Graphkeye
1185 Ans$="Y"
1190 S$="KEY CODE OVERLAY"
1195 GOSUB Pagehead
1200 PRINT "   This section allows the components to be defined and drawn on the
 screen"
1205 PRINT "using the keys in the upper right corner of the keyboard.  The previ
ous key"
1210 PRINT "deffinitions are not valid while entering the components but will
be"
1215 PRINT "during later portions of this program.  As the flashing cursor moves
 to each"
1220 PRINT "region in numerical order press the coresponding key and wait for th
e cursor to"
1225 PRINT "appear at the next region.  All regions must be defined even if with
 k0=>EMPTY."
1230 PRINT
1235 PRINT " NOTE:  k11-k14 refer to chip carriers or flat packs."
1240 PRINT
1245 PRINT "    If you do not have a plastic key code overlay filled in (HP part
#7120-6164), I will make a paper one for you."
1250 Ans$="N"
1255 INPUT "DO YOU NEED A PAPER OVERLAY (N or Y)?",Ans$
1260 IF Ans$="BACK_UP" THEN RETURN
1265 IF UPC$(Ans$[1,1])="N" THEN 1320
1270 PRINTER IS 0
1275 PRINT SPA(10),"TEAR OFF FOR COMPONENT DEFFINITION (E. CODE OVERLAY)",LIN(2
)
```

```
1280 PRINT "| EMPTY | HORIZ | VERT  | HORIZ  | VERT  | HORIZ | VERT  |"
1285 PRINT "| (ko)  | DIP14 | DIP14 | DIP16  | DIP16 | DIP24 | DIP24 |   PLACE A
BOVE KEYS"
1290 PRINT "TEAR HERE ------------------------------------------THEN PRESS CON
T ---"
1295 PRINT LIN(1)
1300 PAUSE
1305 PRINT "| (k8)  | HORIZ | VERT  |  FLAT  |  FLAT |  FLAT |  FLAT |    PLACE
BELOW KEYS "
1310 PRINT "|       | DIP40 | DIP40 | 16 PIN | 24 PIN| 40 PIN| 64 PIN |"
1315 PRINT LIN(4)
1320 PRINTER IS 16
1325 ! NOTE THAT THE KEY# IS THE CODE FOR TYPE OF ELEMENT STORED IN Itype(I)
1330 ON KEY #0 GOTO Empty
1335 ON KEY #1 GOTO Hdip14
1340 ON KEY #2 GOTO Vdip14
1345 ON KEY #3 GOTO Hdip16
1350 ON KEY #4 GOTO Vdip16
1355 ON KEY #5 GOTO Hdip24
1360 ON KEY #6 GOTO Vdip24
1365 ON KEY #7 GOTO 1435
1370 ON KEY #8 GOTO 1435
1375 ON KEY #9 GOTO Hdip40
1380 ON KEY #10 GOTO Vdip40
1385 ON KEY #11 GOTO Flat16
1390 ON KEY #12 GOTO Flat24
1395 ON KEY #13 GOTO Flat40
1400 ON KEY #14 GOTO Flat64
1405 IF Olde=PI THEN RETURN
1410 GRAPHICS
1415          FOR I=1 TO Nreg
1420          IF Itype(I)=10 THEN Nextr
1425 Loop:    MOVE X(I),Y(I)
1430          POINTER X(I),Y(I),2
1435    ! THIS IS AN ENDLESS LOOP TO ALLOW FOR USE OF THE PRIORITY INTTERUPT KEYS
1440          GOTO Loop
1445 Nextr: IF Reg_cha<>0 THEN RETURN
1450     IF I<>Nreg THEN 1475
1455     IF Olde<>PI THEN WAIT 100*Nreg^1.5
1460     POINTER 0,0,2
1465     EXIT GRAPHICS
1470     RETURN
1475    NEXT I
1480 Empty:GOSUB Erasenum
1485 Itype(I)=Npin(I)=We(I)=Le(I)=0
1490 GOTO Nextr
1495 Hdip14:GOSUB Erasenum
1500 Npin(I)=14
1505 IF Itype(I)=2 THEN LDIR PI/2
1510 LABEL USING "K";"DIP14"
1515 We(I)=We=.25*25.4        ! ACTUAL WIDTH IN mm
1520 Le(I)=Le=.725*25.4       ! ACTUAL LENGTH IN mm
1525 IF (Itype(I)=1) OR (Itype(I)=0) THEN 1545
1530 Temp_dim=We(I)           ! HERE LENGTH AND WIDTH TRANSPOSED SUCH THAT LENGTH
1535 We(I)=We=Le(I)           ! IS DEFINED TO BE IN THE DIRECTION OF AIR-FLOW
1540 Le(I)=Le=Temp_dim
1545 IF Itype(I)=0 THEN Itype(I)=1
1550 Drawdip:! THIS SECTION WILL DRAW ALL THE DIP FIGURES ON THE CRT IF Npin<28
```

```
1555 Le=Le/Sca
1560 We=We/Sca
1565 MOVE X(I)-Le/2,Y(I)-We/2
1570 DRAW X(I)-Le/2,Y(I)+We/2
1575 DRAW X(I)+Le/2,Y(I)+We/2
1580 DRAW X(I)+Le/2,Y(I)-We/2
1585 DRAW X(I)-Le/2,Y(I)-We/2
1590 LDIR 0
1595 GOTO Nextr                                                    ! End of Draw_dip
1600 Vdip14:Itype(I)=2
1605 GOTO Hdip14
1610 Hdip16:GOSUB Erasenum
1615 Npin(I)=16
1620 IF Itype(I)=4 THEN LDIR PI/2
1625 LABEL USING "K";"DIP16"
1630 We(I)=We=.25*25.4          ! WIDTH IN mm
1635 Le(I)=Le=.825*25.4         ! LENGTH IN mm
1640 IF Itype(I)<>4 THEN Itype(I)=3
1645 IF Itype(I)<>4 THEN Drawdip
1650 Temp_dim=We(I)
1655 We(I)=We=Le(I)
1660 Le(I)=Le=Temp_dim
1665 GOTO Drawdip                                                  ! End of Hdip16
1670 Vdip16:Itype(I)=4
1675 GOTO Hdip16
1680 Hdip24:GOSUB Erasenum
1685 Npin(I)=24
1690 IF Itype(I)=6 THEN LDIR PI/2
1695 LABEL USING "K";"DIP 24"
1700 We(I)=We=.55*25.4
1705 Le(I)=Le=1.25*25.4
1710 IF Itype(I)<>6 THEN Itype(I)=5
1715 IF Itype(I)<>6 THEN Drawdip
1720 Temp_dim=We(I)
1725 We(I)=We=Le(I)
1730 Le(I)=Le=Temp_dim
1735 GOTO Drawdip                                                  ! End of Hdip24
1740 Vdip24:Itype(I)=6
1745 GOTO Hdip24
1750 Hdip40:IF (I MOD Nxr=0) OR (Itype(I+1)=10) AND (Reg_cha=0) THEN Loop
1755 GOSUB Erasenum
1760 I=Ih=I+1
1765 GOSUB Erasenum
1770 I=I-1
1775 Npin(I)=Npin(Ih)=20     ! THIS IS FOR EACH HALF OF THE 40 PINS
1780 Itype(I)=Itype(Ih)=9
1785 MOVE X(I)+Lr/2,Y(I)
1790 LABEL USING "K";"DIP40"
1795 We(I)=We(Ih)=We=.6*25.4
1800 Le(I)=Le(Ih)=Le=25.4    ! THIS IS FOR EACH HALF IN EACH REGION
1805 We=We/Sca
1810 Le=Le/Sca
1815 MOVE X(I)+Lr/2-Le,Y(I)+We/2
1820 DRAW X(I)+Lr/2-Le,Y(I)-We/2
1825 DRAW X(I)+Lr/2+Le,Y(I)-We/2
1830 DRAW X(I)+Lr/2+Le,Y(I)+We/2
1835 DRAW X(I)+Lr/2-Le,Y(I)+We/2
1840 I=Ih
```

```
1845 GOTO Nextr
1850 Vdip40:IF I+Nxr>Nreg THEN 1425
1855 GOSUB Erasenum
1860 I=Ih=I+Nxr
1865 GOSUB Erasenum
1870 I=I-Nxr
1875 Npin(I)=Npin(Ih)=20     ! THIS IS FOR THE HALF OF THE 40 PINS IN EACH REGION
1880 Itype(I)=Itype(Ih)=10
1885 LDIR PI/2
1890 MOVE X(I),Y(I)-Hr/2
1895 LABEL USING "K";"DIP40"
1900 LDIR 0
1905 We(I)=We(Ih)=We=.6*25.4
1910 Le(I)=Le(Ih)=Le=25.4     ! THIS IS FOR HALF
1915 We=We/Sca
1920 Le=Le/Sca
1925 MOVE X(I)+We/2,Y(I)-Hr/2+Le
1930 DRAW X(I)-We/2,Y(I)-Hr/2+Le
1935 DRAW X(I)-We/2,Y(I)-Hr/2-Le
1940 DRAW X(I)+We/2,Y(I)-Hr/2-Le
1945 DRAW X(I)+We/2,Y(I)-Hr/2+Le
1950 LDIR 0
1955 Temp_dim=Le(I)!HERE TRANSPOSE Le AND We TO MAINTAIN LENGTH DEFF WITH AIP
1960 Le(I)=Le(Ih)=We(I)
1965 We(I)=We(Ih)=Temp_dim
1970 GOTO Nextr
1975 Flat16:Itype(I)=11
1980 GOSUB Erasenum
1985 Npin(I)=16
1990 LABEL USING "K";"16"
1995 Le=We=We(I)=Le(I)=4.57
2000 GOTO Drawdip
2005 Flat24:Itype(I)=12
2010 GOSUB Erasenum
2015 Npin(I)=24
2020 LABEL USING "K";"24"
2025 Le=We=We(I)=Le(I)=7.75
2030 GOTO Drawdip
2035 Flat40:Itype(I)=13
2040 GOSUB Erasenum
2045 Npin(I)=40
2050 LABEL USING "K";"40"
2055 Le=We=We(I)=Le(I)=12.19
2060 GOTO Drawdip
2065 Flat64:Itype(I)=14
2070 GOSUB Erasenum
2075 Npin(I)=64
2080 LABEL USING "K";"FLAT64"
2085 Le=We=We(I)=Le(I)=18.29
2090 GOTO Drawdip                                  ! END OF COMPONENT DEFFINITIONS
2095 !
2100 Erasenum:! HERE WE MOVE THE REGION NUMBER TO THE UPPER LEFT CORNER
2105 CSIZE 3
2110 MOVE X(I),Y(I)
2115 PEN -1
2120 LABEL USING "K";I
2125 CSIZE 2.5/Sca
2130 IF Reg_cha=0 THEN PEN 1
```

```
2135 MOVE X(I)-.4*Lr,Y(I)+.4*Hr
2140 LABEL USING "K";I
2145 MOVE X(I),Y(I)
2150 CSIZE 3.4/Sca
2155 RETURN                                                    ! END OF ERASENUM
2160 !
2165 Bd_chae:GOSUB Error
2170 Bd_cha:! THIS ROUTINE ALLOWS FOR  CHANGE OF TYPE FOR SPECIFIED COMPONENTS
2175 ON ERROR GOTO Bd_chae
2180 S$="CHANGE COMPONENTS"
2185 GOSUB Pagehead
2190 PRINT "    This section allows corrections to the components on the circuit
 board."
2195 PRINT "However; you may not change the circuit board itself.  You will firs
t remove"
2200 PRINT "all unwanted components (up to 10) by entering the region number on
the picture."
2205 PRINT "When removing any component which requires two spaces, use the lower
 region num."
2210 PRINT "Entering a 0 or pressing CONT with no entry will allow program to
continue"
2215 PRINT "with the section that allows deffinition of components in all empty
spaces."
2220 PRINT
2225 PRINT "Remember to allow space for the larger components that require two r
egions. "
2230 Itt=0
2235 Again: Itt=Itt+1
2240 Ans$="0"
2245 INPUT "ENTER THE REGION NUMBER TO REMOVE COMPONENT (DEFAULT=0 =NONE).",An
s$
2250 IF Ans$="BACK_UP" THEN RETURN
2255 Reg_cha=VAL(Ans$)
2260 IF Reg_cha=0 THEN Add_comp
2265 IF (Reg_cha>0) AND (Reg_cha Nreg+1) THEN 2280
2270 GOSUB Errin
2275 GOTO Again
2280 Reg_cha(Itt)=Reg_cha
2285 GOSUB Erase_comp
2290 Reg_cha=0
2295 IF Itt<=10 THEN Again
2300 S$="MAXIMUM NUMBER OF REGIONS"
2305 GOSUB Pagehead
2310 PRINT "   There are 10 changes to accomplish at this point and to avoid pro
blems you"
2315 PRINT "must redefine the board."
2320 PRINT LIN(3),SPA(15),"Press CONT "
2325 GOSUB Add_comp
2330 GOTO Bd_cha
2335 Erase_comp:! THIS SECTION REMOVE UNWANTED COMPONENT TO ALLOW CHANGE
2340 GRAPHICS
2345 PEN -1
2350 I=Reg_cha
2355 IF Itype(Reg_cha)=0 THEN 2365
2360 ON Itype(I) GOSUB Hdip14,Vdip14,Hdip16,Vdip16,Hdip24,Vdip24,Errolde,Errolde
,Hdip40,Vdip40,Flat16,Flat24,Flat40,Flat64
2365 PEN 1
2370 GOSUB Empty
```

```
2375 IF I<2 THEN 2400
2380 IF (Itype(I-1)=9) AND (Itype(I)=9) THEN 2390
2385 GOTO 2400
2390 I=I-1
2395 GOSUB Empty
2400 IF I<Nxr+1 THEN 2420
2405 IF Itype(I-Nxr)<>10 THEN 2420
2410 I=I-Nxr
2415 GOSUB Empty
2420 WAIT 500
2425 EXIT GRAPHICS
2430 RETURN
2435 Add_comp:! THIS SECTION ALLOWS ADDITION OF COMPONENTS TO EMPTY SPACES
2440 IF Itt<2 THEN 2475
2445 IF Olde=PI THEN GOSUB Graphkey
2450 FOR I=1 TO Nreg
2455 IF Itype(I)<>0 THEN 2470
2460 POINTER X(I),Y(I),2
2465 GOTO 2460
2470 NEXT I
2475 FOR I=1 TO 15
2480 OFF KEY #I
2485 NEXT I
2490 EXIT GRAPHICS
2495 RETURN                                                    ! END OF ADD_COMP
2500 !
2505 Case_type:GOSUB Error
2510 Case_typ:! THIS SECTION ALLOWS THE USER TO SPECIFY THE CASE TYPE FOR DIPs
2515 ON ERROR GOTO Case_type
2520 IF (Olde=PI) AND (Itt<2) THEN GOTO Case_cns
2525 ! BUT FIRST MUST TELL THE USER TO CHANGE THE KEY-CODE OVERLAY
2530 S$="CHANGE OF THE SPECIAL FUNCTION KEYS"
2535 GOSUB Pagehead
2540 PRINT LIN(10),SPA(10),"REMOVE THE KEY CODE OVERLAY FOR COMPONENT INPUT"
2545 PRINT LIN(1),SPA(10),"REPLACE THE GENERAL PURPOSE KEY CODE OVERLAY"
2550 DISP SPA(25),"PRESS CONT WHEN READY"
2555 PAUSE
2560 S$="TYPE OF DIP PACKAGE"
2565 GOSUB Pagehead
2570 PRINT "    Dual inline packages (DIPs) generally come in either an injectio
n molded"
2575 PRINT "plastic case or a ceramic sandwich case.  The style of case construc
tion affects"
2580 PRINT "the heat transfer and must be known for the thermal model."
2585 PRINT
2590 PRINT "The methods of specifying the types of cases are listed below."
2595 PRINT TAB(15);"THESE APPLY TO THE DIPs ONLY" .
2600 PRINT LIN(2)
2605 PRINT TAB(10);"1. ALL CERAMIC"
2610 PRINT TAB(10);"2. ALL PLASTIC"
2615 PRINT TAB(10);"3. MAJORITY CERAMIC (USER SPECIFY WHICH ARE PLASTIC)"
2620 PRINT TAB(10);"4. MAJORITY PLASTIC (USER SPECIFY WHICH ARE CERAMIC)"
2625 PRINT TAB(10);"5. USER SPECIFY CASE STYLE FOR EACH DIP COMPONENT"
2630 Ans$="1"
2635 INPUT "ENTER YOUR CHOICE (1,2,3,4,5)",Ans$
2640 IF Ans$<>"BACK_UP" THEN 2670
2645 PRINT LIN(20),SPA(20),"UNABLE TO BACK UP WITHOUT LOSING THE BOARD",LIN(5)
2650 BEEP
```

```
2655 DISP "Press CONT when ready to continue"
2660 PAUSE
2665 GOTO Case_typ
2670 Ans=VAL(Ans$)
2675 IF (Ans<1) OR (Ans>5) THEN Case_type
2680 ON Ans GOSUB Cere,Plas,Mcere,Mplas,Any
2685 Case_cha:S$="CORRECTIONS TO CASE STYLE FOR DIP PACKAGES"
2690 GOSUB Pagehead
2695 PRINT "    On the screen below is a line that represents the case type for
all regions."
2700 PRINT "Those regions that contain a plastic cased component are shown in in
verse vidio"
2705 PRINT "(1) while all others are shown in normal video (1)."
2710 PRINT
2715 PRINT "To make corrections enter the region # that is incorrect,if no chang
es no entry.",LIN(1)
2720     FOR I=1 TO Nreg
2725     IF I MOD 10=1 THEN PRINT SPA(10);
2730     IF (Case$[I,I]="0") AND (I>=10) THEN PRINT I;SPA(1);
2735     IF (Case$[I,I]="0") AND (I<10) THEN PRINT SPA(1);I;SPA(1);
2740     IF (Case$[I,I]="1") AND (I>=10) THEN PRINT CHR$(129);I;CHR$(129);SPA(1)
;
2745     IF (Case$[I,I]="1") AND (I<10) THEN PRINT CHR$(129);" ";I;CHR$(129);SPA
(1);
2750     IF I MOD 10=0 THEN PRINT LIN(1)
2755     NEXT I
2760     PRINT
2765 Ans$="NULL"
2770 INPUT "ENTER REGION # TO CHANGE OR PRESS CONT WITH NO ENTRY IF OK",Ans$
2775 IF (Ans$="NULL") OR (Ans$="BACK_UP") THEN RETURN
2780 Reg1=VAL(Ans$)
2785 IF (Reg1>0) AND (Reg1<=Nreg) THEN 2800
2790 GOSUB Errin
2795 GOTO Case_cha
2800 Case$[Reg1,Reg1]=VAL$(INT((VAL(Case$[Reg1,Reg1])+1) MOD 2))
2805 GOTO Case_cha                                          ! END OF Case_cha
2810 !
2815 Cere:! ALL CERAMIC CASES
2820 FOR I=1 TO Nreg
2825 Case$[I,I]="0"
2830 NEXT I
2835 RETURN                                                 !END OF CERE
2840 !
2845 Plas:! ALL PLASTIC CASES
2850 FOR I=1 TO Nreg
2855 Case$[I,I]="1"
2860 NEXT I
2865 RETURN                                                 !END OF Plas
2870 !
2875 Mcere:  S$="MAJORITY CERAMIC ... SPECIFY WHICH ARE PLASTIC"
2880 GOSUB Pagehead
2885 FOR I=1 TO Nreg
2890 Case$[I,I]="0"
2895 NEXT I
2900 Ans$="NULL"
2905 INPUT "ENTER THE NUMBER OF PLASTIC COMPONENTS",Ans$
2910 IF Ans$="BACKUP" THEN Case_typ
2915 Ans=VAL(Ans$)
```

```
2920 IF (Ans>0) AND (Ans<Nreg+1) THEN 2935
2925 GOSUB Errin
2930 GOTO Mcere
2935 IF Ans=Nreg THEN Plas
2940     FOR I=1 TO Ans
2945     Ans$="NULL"
2950     INPUT "ENTER THE REGION NUMBER THAT CONTAINS A PLASTIC COMPONENT",Ans$
2955     IF Ans$="BACK_UP" THEN Mcere
2960     Reg1=VAL(Ans$)
2965     IF (Reg1>0) AND (Reg1<Nreg+1) THEN 2980
2970     GOSUB Errin
2975     GOTO 2950
2980     Case$[Reg1,Reg1]="1"
2985     NEXT I
2990 RETURN                                                    !END OF Mcere
2995 !
3000 Mplas: S$="MAJORITY PLASTIC ... SPECIFY WHICH ARE CERAMIC"
3005 GOSUB Pagehead
3010     FOR I=1 TO Nreg
3015     Case$[I,I]="1"
3020     NEXT I
3025 Ans$="NULL"
3030 INPUT "ENTER THE NUMBER OF CERAMIC COMPONENTS",Ans$
3035 IF Ans$="BACKUP" THEN Case_typ
3040 Ans=INT(VAL(Ans$))
3045 IF (Ans>0) AND (Ans<Nreg+1) THEN 3060
3050 GOSUB Errin
3055 GOTO Mplas
3060 IF Ans=Nreg THEN Cere
3065     FOR I=1 TO Ans
3070     Ans$="NULL"
3075     INPUT "ENTER THE REGION NUMBER THAT CONTAINS A CERAMIC COMPONENT",Ans$
3080     IF Ans$="BACK_UP" THEN Mplas
3085     IF (Reg1>0) AND (Reg1<Nreg+1) THEN 3100
3090     GOSUB Errin
3095     GOTO 3075
3100     Case$[Reg1,Reg1]="0"
3105     NEXT I
3110 RETURN                                                    ! END OF Mplas
3115 !
3120 Any:! EACH REGION MUST HAVE IT'S DIP SPECIFIED
3125     FOR I=1 TO Nreg
3130     IF (Itype(I)<1) OR (Itype(I)>10) THEN 3160
3135     DISP "IDENTIFY CASE TYPE FOR REGION #";I;"(ENTER 1 FOR PLASTIC AND 0 FO
R OTHER)";
3140     INPUT Case$[I,I]
3145     IF (Case$[I,I]="1") OR (Case$[I,I]="0") THEN 3160
3150     GOSUB Errin
3155     GOTO 3135
3160     NEXT I
3165 RETURN                                                    !END OF Any
3170 !
3175 What_now:! THIS SECTION IS THE FINAL SECTION
3180 S$="WHAT NOW ?"
3185 GOSUB Pagehead
3190 PRINT "   You have completed one cycle through BOARDS and have the follow
ing options:"
3195 PRINT LIN(1),TAB(10),"1. PERFORM THERMAL ANALYSIS ON ";Name$;" USING THERM
L."
```

```
3200 PRINT LIN(1),TAB(10),"2. INPUT ANOTHER CIRCUIT BOARD DESCRIPTION FROM KEYBO
ARD."
3205 PRINT LIN(1),TAB(10),"3. INPUT ANOTHER CIRCUIT BOARD DESCRIPTION FROM MASS
STORAGE."
3210 PRINT LIN(1),TAB(10),"4. TERMINATE."
3215 !
3220 Ans$="1"
3225 INPUT "YOUR CHOICE (1,2,3,4):",Ans$
3230 IF Ans$="BACK_UP" THEN RETURN
3235 Ans=ABS(INT(VAL(Ans$)))
3240 IF Ans<5 THEN 3255
3245 GOSUB Errin
3250 GOTO 3220
3255 ON Ans GOTO Therml,Redo,Redo,Ende
3260 Therml:DISP "WORKING LOADING THERML TO PERFORM ANALYSIS OF ";Name$
3265 LOAD "THERML",85
3270 STOP
3275 !
3280 Redo: Map=Ans
3285 RETURN
3290 !
3295 Ende:PRINT PAGE,LIN(20),SPA(10),"NORMAL TERMINATION "
3300 DISP "WORKING LOADING STANDARD KEY DEFFINITIONS"
3305 GCLEAR
3310 LOAD KEY "STDKEY"
3315 END                                                    ! END OF What_now
3320 !
3325 Pagehead:! THIS SECTION PLACES DESIRED HEADING ON A BLANK CRT
3330 PRINTER IS 16
3335 PRINT PAGE,TAB(34-LEN(S$)/2);"*** ";CHR$(132);S$;CHR$(128);" ***",LIN(2)
3340 RETURN                                                 ! END OF PAGEHEAD
3345 !
3350 Errin:! THIS SECTION ALERTS THE USER TO AN ATTEMPT TO INPUT BAD DATA
3355 BEEP
3360 DISP "INPUT OUT OF RANGE...........TRY AGAIN"
3365 WAIT 1500
3370 BEEP
3375 WAIT 1000
3380 BEEP
3385 RETURN
3390 !                                                          END OF Errin
3395 !
3400 Leadse:GOSUB Error
3405 Leads:! THIS SECTION ALLOWS THE INPUT OF THE NUMBER OF LEADS BETWEEN REGION
S
3410 ON ERROR GOTO Leadse
3415 S$="ELECTRICAL LEADS OR OTHER CONDUCTION PATHS"
3420 GOSUB Pagehead
3425 PRINT "    All circuit boards have thermally conductive materials applied t
o their "
3430 PRINT "surface either in the form of electrical leads or as thermal conduct
ion paths."
3435 PRINT "Heat will be transferred through these materials between the regions
."
3440 PRINT "if there are conduction paths (rails) present, they will have a much
 larger"
3445 PRINT "effect than the electrical leads and the electrical leads will be ne
glected "
```

```
3450 PRINT "in the thermal model."
3455 Ans$="N"
3460 INPUT "ARE THERE METAL CONDUCTION PATHS PRESENT (N or Y)",Ans$
3465 IF Ans$="BACK_UP" THEN RETURN
3470 IF UPC$(Ans$[1,1])="N" THEN Leads_size
3475 IF UPC$(Ans$[1,1])="Y" THEN 3490
3480 GOSUB Errin
3485 GOTO Leads
3490 S$="CONDUCTION RAILS"
3495 A1$="CPU's"
3500 GOSUB Pagehead
3505 PRINT "    Thermal conduction rails are much wider and thicker than the ele
ctrical"
3510 PRINT "leads plated onto the circuit board.  The thickness is generally uni
form,"
3515 PRINT "however; the rails are typically not of uniform width.  It is theref
ore"
3520 PRINT "necessary to define a concept of Conduction Path Units (CPU's).  The
 rail width"
3525 PRINT "will be modeled in terms of an integer number of CPU's.  You will
be asked to"
3530 PRINT "input the thickness (mm) of a CPU and the width will automatically d
efault to"
3535 PRINT ".1 mm such that a rail of width 1.7 mm can be modeled as 17 CPU's."
3540 PRINT
3545 PRINT "    For your convenience the thermal conductivities (watts M-C) of t
hree alloys"
3550 PRINT "commonly used as material for conduction rails are given below:",LIN
(1)
3555 PRINT "Al 5052= 138.2 W/M-C ...... AL 6101= 215.7 W/M-C ...... Cu 113 = 389
.8 W/M-C"
3560 PRINT
3565 Olde=0
3570 Ans$="1"
3575 INPUT "ENTER THE THICKNESS OF THE THERMAL CONDUCTION PATHS or CPU's (mm)",A
ns$
3580 IF Ans$="BACK_UP" THEN Leads
3585 T1=ABS(VAL(Ans$))
3590 PRINT "THICKNESS OF CPU's = ";T1;"mm"
3595 Ans$=".1"
3600 ! INPUT "ENTER THE WIDTH OF THE CPU's (mm)",Ans$
3605 IF Ans$="BACK_UP" THEN 3570
3610 W1=ABS(VAL(Ans$))
3615 A1=-W1*T1 !######### NOTE THAT THIS AREA IS NEGATIVE FOR CPU's
3620 PRINT "WIDTH OF CPU's     = ";W1;"mm      AREA FOR HEAT TRANSFER PER CPU ="
;-A1;"mm^2"
3625 Ans$="138.2"
3630 INPUT "ENTER THE THERMAL CONDUCTIVITY OF THE CONDUCTION PATHS (W M-C)",Ans$
3635 IF Ans$="BACK_UP" THEN 3570
3640 K1=ABS(VAL(Ans$))
3645 PRINT "THERMAL CONDUCTIVITY =";K1;"Watts/M-Deg C"
3650 WAIT 1500
3655 GOTO Leads_enter                                          ! END OF CPU
3660 !
3665 Leads_size:S$="NUMBER OF LEADS"
3670 GOSUB Pagehead
3675 A1$="LEADS"
3680 PRINT "    This section of the program allows the entry of the size and con
ductivity of"
```

```
3685 PRINT "leads (traces) on the surface of the circuit board.  These act as bo
th"
3690 PRINT "electrical and thermal conductors between the regions.  When enterin
g the width"
3695 PRINT "figure an average width for all the leads."
3700 PRINT LIN(1),"   The thermal conductivity will default to pure copper (384
Watts/M-Deg C)"
3705 PRINT "with no entry."
3710  Olde=0
3715  Ans$=".033"
3720  INPUT "ENTER THE THICKNESS OF THE LEADS (TRACES) ON THE CIRCUIT BOARD (mm)
",Ans$
3725  IF Ans$="BACK_UP" THEN Leads
3730  T1=ABS(VAL(Ans$))
3735  PRINT LIN(1),"LEAD THICKNESS       =";T1;"mm"
3740  Ans$="1"
3745  INPUT "ENTER THE AVERAGE WIDTH OF THE LEADS (TRACES) ON THE CIRCUIT BOAR
D (mm)",Ans$
3750  IF Ans$="BACK_UP" THEN 3715
3755  W1=ABS(VAL(Ans$))
3760  A1=W1*T1
3765  PRINT "AVG WIDTH OF LEADS  = ";W1;"mm      AREA FOR HEAT TRANSFER PER LEAD
  =";A1;"mm^2"
3770  Ans$="384"
3775  INPUT "ENTER THE CONDUCTIVITY OF THE TRACES (DEFAULT COPPER = 384Watts/M-d
egK)",Ans$
3780  K1=ABS(VAL(Ans$))
3785  PRINT "CONDUCTIVITY OF THE LEADS =";K1;" Watts/M-C"
3790  WAIT 1500
3795 Leads_enter: S$="NUMBERS OF "&A1$&" BETWEEN REGIONS"
3800 GOSUB Pagehead
3805 PRINT "    This section of the program allows the entry of the number of th
e ";A1$
3810 PRINT "that cross each of the internal region boundaries.  If these are on
both sides"
3815 PRINT "of the board add both numbers together.  The flashing cross will mov
e to the"
3820 PRINT "appropriate location on the screen but the graphics picture will not
 remain."
3825 PRINT "If a hard copy of the graphics is needed for a guide, recall that k3
 will"
3830 PRINT "provide one.  The picture will return to the screen while the number
 of ";A1$
3835 PRINT "is labeled and the flashing cursor will move to the next location to
 be entered."
3840 PRINT LIN(1),"DO NOT USE k0 (BACK_UP) WHILE THE NUMBERS OF ";A1$;" ARE BE
ING ENTERED!"
3845 PRINT LIN(1),"There will be correction opportunities later."
3850 DISP "PRESS CONT WHEN READY TO START WITH REGION #1"
3855 PAUSE
3860  GOTO Leads_in
3865 Leads_label: ! HERE THE NUMBERS OF LEADS OR CPU'S IS WRITTEN ON THE SCREEN
3870 CSIZE 2.5
3875 GRAPHICS
3880 LABEL USING "K";N1
3885 PEN -1
3890 LDIR -PI
3895 LABEL USING "K";N1
```

```
3900 PEN 1
3905 LDIR 0
3910 IF Olde<>PI THEN WAIT 500
3915 RETURN
3920 Leads_old:CSIZE 2.5
3925 S$="NUMBERS OF LEADS"
3930 A1$="LEADS"
3935 IF A1<0 THEN A1$="CPU's"
3940 GOSUB Pagehead
3945 PRINT "    This section of the program displays the numbers of leads crossi
ng "
3950 PRINT "boundaries of regions by placing numbers on the sides of the regions
 that"
3955 PRINT "represent the informations stored in ";Name$;".  You will be allowed
 to make"
3960 PRINT "corrections to that information and re-store in on mass storage if r
equired."
3965 PRINT
3970 ! PRINT "If you do not desire to view the data concerning number of leads,
enter any "
3975 ! PRINT "number before you press CONT ."
3980 DISP "PRESS CONT WHEN READY TO VIEW DATA "
3985 Leads_in: FOR I=1 TO Nreg
3990  J=1  ! HERE IS BOTTOM OF THE REGION
3995  GRAPHICS
4000  IF I+Nxr<=Nreg THEN 4025
4005  N1(J,I)=N1=0   ! HERE IS BOTTOM OF THE BOARD WHERE CONNECTORS WILL GO
4010  MOVE X(I),Y(I)-.45*Hr
4015  GOSUB Leads_label
4020  GOTO 4165
4025  IF (Itype(I)<>10) OR (Itype(I+Nxr)<>10) THEN 4100
4030  MOVE X(I)+.32*Lr,Y(I)-.45*Hr
4035  IF Olde<>PI THEN 4050
4040  N1=N1(J,I)
4045  GOTO 4080
4050  POINTER X(I)+.32*Lr,Y(I)-.45*Hr,2
4055  WAIT 2000
4060  DISP "ENTER THE NUMBER OF ";A1$;" BETWEEN REGIONS  ";CHR$(132);I;CHR$(128)
;" AND ";CHR$(132);I+Nxr;CHR$(128);
4065  INPUT N1
4070  N1=ABS(N1)
4075  N1(J+2,I+Nxr)=N1(J,I)=N1
4080  GOSUB Leads_label
4085  MOVE X(I+Nxr)+.32*Lr,Y(I+Nxr)+.42*Hr
4090  GOSUB Leads_label
4095  GOTO 4165
4100  MOVE X(I),Y(I)-.45*Hr
4105  IF Olde<>PI THEN 4120
4110  N1=N1(J,I)
4115  GOTO 4150
4120  POINTER X(I),Y(I)-.45*Hr,2
4125  WAIT 2000
4130  DISP "ENTER THE NUMBER OF ";A1$;" BETWEEN REGIONS  ";CHR$(132);I;CHR$(128)
;" AND ";CHR$(132);I+Nxr;CHR$(128);
4135  INPUT N1
4140  N1=ABS(N1)
4145  N1(J,I)=N1(J+2,I+Nxr)=N1
4150  GOSUB Leads_label
```

```
4155  MOVE X(I+Nxr),Y(I+Nxr)+.42*Hr
4160  GOSUB Leads_label
4165  J=2  ! HERE IS FOR RIGHT SIDE OF REGION
4170  IF I MOD Nxr<>0 THEN 4195
4175  N1(2,I)=N1=0  ! HERE IS THE RIGHT SIDE OF THE BOARD
4180  MOVE X(I)+.42*Lr,Y(I)
4185  GOSUB Leads_label
4190  GOTO 4340
4195  IF (Itype(I)<>9) OR (Itype(I+1)<>9) THEN 4270
4200  MOVE X(I)+.42*Lr,Y(I)-.32*Hr
4205  IF Olde<>PI THEN 4220
4210  N1=N1(J,I)
4215  GOTO 4250
4220  POINTER X(I)+.42*Lr,Y(I)-.32*Hr,2
4225  WAIT 2000
4230  DISP "ENTER THE NUMBER OF ";A1$;" BETWEEN REGIONS  ";CHR$(132);I;CHR$(128)
;" AND ";CHR$(132);I+1;CHR$(128);
4235  INPUT N1
4240  N1=ABS(N1)
4245  N1(J,I)=N1(J+2,I+1)=N1
4250  GOSUB Leads_label
4255  MOVE X(I+1)-.42*Lr,Y(I+1)-.32*Hr
4260  GOSUB Leads_label
4265  GOTO 4335
4270  MOVE X(I)+.42*Lr,Y(I)
4275  IF Olde<>PI THEN 4290
4280  N1=N1(J,I)
4285  GOTO 4315
4290  POINTER X(I)+.42*Lr,Y(I),2
4295  WAIT 2000
4300  DISP "ENTER THE NUMBER OF ";A1$;" BETWEEN REGIONS  ";CHR$(132);I;CHR$(128)
;" AND ";CHR$(132);I+1;CHR$(128);
4305  INPUT N1
4310  N1=ABS(N1)
4315  GOSUB Leads_label
4320  N1(J+2,I+1)=N1(J,I)=N1
4325  MOVE X(I+1)-.42*Lr,Y(I)
4330  GOSUB Leads_label
4335  J=3  ! HERE IS FOR TOPS OF EACH REGION
4340  IF I>Nxr THEN 4360
4345  N1(J,I)=N1=0
4350  MOVE X(I),Y(I)+.42*Hr
4355  GOSUB Leads_label
4360  J=4  ! HERE IS FOR LEFT SIDE OF REGION OR BOARD
4365  IF (I-1) MOD Nxr=0 THEN 4375
4370  GOTO 4390
4375  N1(J,I)=N1=0
4380  MOVE X(I)-.42*Lr,Y(I)
4385  GOSUB Leads_label
4390  NEXT I
4395  GRAPHICS
4400  MOVE 160,130
4405  LORG 6
4410  CSIZE 3
4415  LABEL USING "K";"# OF "&A1$
4420  DRAW X(Nxr),Y(Nxr)+Hr/2
4425  POINTER 0,0,0
4430  WAIT 5000
```

```
4435  EXIT GRAPHICS
4440  RETURN
4445 Leads_chae: GOSUB Error
4450 Leads_cha: S$="CORRECTIONS TO NUMBER OF "&A1$
4455 ON ERROR GOTO Leads_chae
4460 Check=0
4465  GOSUB Pagehead
4470  PRINT "   You may now make corrections to the numbers of ";A1$;" crossing
the boundaries."
4475  PRINT "Recall that k3 will provide a hard copy of the graphics if needed
 while k2 "
4480  PRINT "will return the graphics picture to the screen for visual checking.
"
4485  PRINT
4490  PRINT "In responce to the prompts below, INPUT Reg #, Reg #, CORRECT # OF
";A1$,LIN(1)
4495  PRINT "IF THERE ARE NO CHANGES PRESS CONT KEY WITH NO INPUT."
4500  LORG 5
4505  IF Check>0 THEN BEEP
4510  IF Check>0 THEN PRINT LIN(3),"CHECK OVER THE FIGURE, YOU HAVE MADE AN IL
LOGICAL CHOICE OF REGIONS."
4515  Check=Check+1
4520  Reg1=0
4525  DISP "REG # , REG # , CORRECT # OF ";A1$;
4530  INPUT Reg1,Reg2,Newn1
4535  IF Reg1=0 THEN RETURN
4540  IF (Reg1>Nreg) OR (Reg2>Nreg) THEN 4465
4545  IF Reg2>Reg1 THEN 4565
4550  Dum=Reg2
4555  Reg2=Reg1
4560  Reg1=Dum
4565  J=0
4570  IF (Reg1+1=Reg2) AND (Reg1 MOD Nxr<>0) THEN J=2
4575  IF Reg1+Nxr=Reg2 THEN J=1
4580  IF J<>0 THEN 4655
4585  EXIT GRAPHICS
4590  S$="ERROR IN CORRECTIONS"
4595  GOSUB Pagehead
4600  PRINT LIN(5),SPA(5)," THOSE TWO REGIONS DO NOT CONNECT TRY AGAIN"
4605  BEEP
4610  WAIT 2500
4615  GOTO Leads_cha
4620  ! HERE IS THE CORRECTION SCHEME
4625 Leads_erase: PEN -1
4630 GOSUB Leads_label
4635 N1=Newn1
4640 PEN 1
4645 GOSUB Leads_label
4650 RETURN
4655  IF J=2 THEN 4745
4660  IF (Itype(Reg1)<>10) OR (Itype(Reg2)<>10) THEN 4705
4665  MOVE X(Reg1)+.32*Lr,Y(Reg1)-.45*Hr
4670  N1=N1(J,Reg1)
4675  GOSUB Leads_erase
4680  MOVE X(Reg2)+.32*Lr,Y(Reg2)+.42*Hr
4685  N1=N1(J+2,Reg2)
4690  GOSUB Leads_erase
4695  N1(1,Reg1)=N1(1,Reg2)=Newn1
```

```
4700  GOTO Leads_change
4705  MOVE X(Reg1),Y(Reg1)-.45*Hr
4710  N1=N1(J,Reg1)
4715  GOSUB Leads_erase
4720  MOVE X(Reg2),Y(Reg2)+.42*Hr
4725  N1=N1(J+2,Reg2)
4730  GOSUB Leads_erase
4735  N1(J,Reg1)=N1(J+2,Reg2)=Neun1
4740  GOTO Leads_cha
4745  ! HERE WE ARE TO CORRECT THE RIGHT SIDE OF REGIONS
4750  IF (Itype(Reg1)<>9) OR (Itype(Reg2)<>9) THEN 4795
4755  MOVE X(Reg1)+.42*Lr,Y(Reg1)-.32*Hr
4760  N1=N1(J,Reg1)
4765  GOSUB Leads_erase
4770  MOVE X(Reg2)-.42*Lr,Y(Reg2)-.32*Hr
4775  N1=N1(J+2,Reg2)
4780  GOSUB Leads_erase
4795  N1(J,Reg1)=N1(J+2,Reg2)=Neun1
4790  GOTO Leads_change
4795  MOVE X(Reg1)+.42*Lr,Y(Reg1)
4800  N1=N1(J,Reg1)
4805  GOSUB Leads_erase
4810  MOVE X(Reg2)-.42*Lr,Y(Reg2)
4815  N1=N1(J+2,Reg2
4820  GOSUB Leads_erase
4825  N1(J,Reg1)=N1(J+2,Reg2)=Neun1
4830  GOTO Leads_cha
4835 Tempin:  ! THIS SECTION INPUTS THE KNOWN TEMPERATURES OR POWERS OF ELEMENTS
4840 EXIT GRAPHICS
4845 S$="TEMPERATURES OR POWER LEVELS OF COMPONENTS"
4850 GOSUB Pagehead
4855 PRINT "   The thermal model used by this program assumes each component to
be a heat"
4860 PRINT "source for which the user specifies either the maximum junction temp
erature or"
4865 PRINT "the rate of heat generation within that component.  When the maximum
 junction"
4870 PRINT "temperature is specified, the maximum steady state power levels are
calculated."
4875 PRINT "When the rate of power dissipation is specified, the steady state jun
ction"
4880 PRINT "temperatures are calculated."
4885 PRINT
4890 PRINT "The program uses the component surface temperature in the thermal mo
del and "
4895 PRINT "therefore requires a case to junction thermal resistance (Rj_c); how
ever,"
4900 PRINT "if zero is specified then the surface temperature is assumed to be t
he same as"
4905 PRINT "the junction temperature.  When components span two regions, enter h
alf the "
4910 PRINT "component power for each region."
4915 PRINT LIN(1),"    All entries must be in Deg C or Watts and deg C Watts."
4920 IF Olde<>PI THEN 4945
4925 DISP "PRESS CONT WHEN READY TO VIEW THE DATA FROM ";CHR$(132);Name$;CHR$
128);" FOR POSSIBLE CHANGES"
4930 PAUSE
4935 GOTO Temp_cha
```

```
4940 !
4945 Ans$="1"
4950 MAT Pow=ZER
4955 MAT Tj=ZER
4960 MAT Rj_c=ZER
4965 INPUT "DO YOU DESIRE TO SPECIFY POWER LEVELS (1) OR TEMPS (2) ?",Ans$
4970 IF Ans$="BACK_UP" THEN RETURN
4975 Ans=VAL(Ans$)
4980 IF (Ans=1) OR (Ans=2) THEN 4995
4985 GOSUB Errin
4990 GOTO Tempin
4995 IF Ans=1 THEN Pow_in
5000 Temp_in:Tem_sol=0   ! HERE INPUT TEMPERATURES WILL SOLVE FOR POWERS LATER
5005 S$="INPUT OF JUNCTION TEMPERATURES"
5010 GOSUB Pagehead
5015 PRINT "     You are now entering junction temperatures (deg C) and junction
to case"
5020 PRINT "thermal resistance (deg C/Watt).  Do not use k0 (Back_up) option w
hile entering"
5025 PRINT "the data."
5030 PRINT LIN(3)
5035 PRINT "  I                 Tj(I)              Rj_c(I)   "
5040       FOR I=1 TO Nreg
5045       IF Itype(I)=0 THEN 5060
5050       DISP "FOR ELEMENT IN REGION";I;"ENTER  Tjunc,Rj_c";
5055       INPUT Tj(I),Rj_c(I)
5060       PRINT SPA(1),I,Tj(I),Rj_c(I)
5065       Tj(I)=Tj(I)+273
5070       NEXT I
5075  GOTO Temp_cha                                                  ! END OF TEMP_IN
5080 Pow_in: Tem_sol=1    ! HERE INPUT POWER LEVELS   WILL SOLVE FOR TEMPERATURES
5035  S$="INPUT OF COMPONENT POWER LEVELS"
5090  GOSUB Pagehead
5095  PRINT "     You are now entering component power dissipation (Watt) and jun
ction to"
5100  PRINT "case thermal resistances (deg C/Watt). Do not use k0 (Back_up whi
le entering"
5105  PRINT "the data."
5110  PRINT LIN(3)
5115  PRINT "  I                 Pow(I)              Rj_c(I)   "
5120       FOR I=1 TO Nreg
5125       IF Itype(I)=0 THEN 5140
5130       DISP "FOR ELEMENT IN REGION #";I;"ENTER Pow(I),Rj_c(I)";
5135       INPUT Pow(I),Rj_c(I)
5140       PRINT SPA(1),I,Pow(I),Rj_c(I)
5145       Tj(I)=273
5150       NEXT I
5155  GOTO Temp_cha                                                  ! END OF POW_IN
5160  !
5165 Temp_chae: GOSUB Error
5170 Temp_cha:! THIS SECTION ALLOWS CHANGES TO THE TEMPS OR POWER LEVELS
5175 S$="DATA FOR "&Pictlbl$
5180 GOSUB Pagehead
5185 PRINT "     The data listed below are the current values for the variables
 specified."
5190 PRINT "REGION #     Tjunc (DegC)     Power (Watts)  Rcase-j(W/C) "
5195       FOR I=1 TO Nreg
5200       PRINT TAB(2),I;TAB(17),Tj(I)-273;TAB(33),Pow(I);TAB(48),Rj_c(I)
```

```
5205      NEXT I
5210 PRINT LIN(2)
5215 IF Skip=PI THEN GOTO 5260
5220 PRINT "Use the DISPLAY up-arrow OR down-arrow to move the data list as requ
ired"
5225 Check=0
5230 Ans$="0"
5235 INPUT "ANY CHANGES ? INPUT REG # IF YES OR PRESS CONT FOR NO CHANGES",Ans
$
5240 IF Ans$="BACK_UP" THEN Temp_in
5245 Reg1=INT(VAL(Ans$))
5250 IF (Reg1>-1) AND (Reg1<Nreg+1) THEN 5265
5255 GOSUB Errin
5260 GOTO 5230
5265 IF (Reg1=0) AND (Check=0) THEN Hard
5270 IF (Reg1=0) AND (Check<>0) THEN Temp_cha
5275 DISP "TO CHANGE VALUES IN REGION #";Reg1;
5280 Check=1
5285  IF Tem_sol=1 THEN DISP "ENTER  Power , Rj_c";
5290  IF Tem_sol=0 THEN DISP "ENTER  Tjunc , Rj_c";
5295  IF Tem_sol=1 THEN INPUT Pow(Reg1),Rj_c(Reg1)
5300  IF Tem_sol=0 THEN INPUT Tj(Reg1),Rj_c(Reg1)
5305  IF Tem_sol=0 THEN Tj(Reg1)=Tj(Reg1)+273
5310  PRINT LIN(1),TAB(2),Reg1;TAB(17),Tj(Reg1)-273;TAB(33 ,Pow(Reg1);TAB(48),Rj
_c(Reg1);"   *** CHANGE ***"
5315      GOTO 5230                                          ! END OF TEMP_CHA
5320 Hard:! THIS SECT ON PRINTS A COPY OF THE INPUT DATA IF REQUESTED
5325 Ans$="N"
5330 INPUT "DO YOU DESIRE A PRINTED COPY OF THE DATA ABOVE (N or Y)",Ans$
5335 IF Ans$="BACK_UP" THEN Temp_cha
5340 IF Ans$="N" THEN RETURN
5345 PRINTER IS 0
5350 Skip=PI
5355 GOTO 5190
5360 PRINT TAB(39-LEN("THE ABOVE DATA IS FOR "&Pictlbl$)/2),"THE ABOVE DATA IS F
OR ";Pictlbl$,LIN(1)
5365 PRINT "BOARD LENGTH (defined along air flow)=";Bdl;"mm          HEIGHT =";
Bdh;"mm",LIN(1)
5370 PRINT "BOARD THICKNESS=";Thick_b;"mm                        CONDUCTIVITY ="
;Kb;"Watts/M-K",LIN(2)
5375 PRINT "THE BOARD MODEL ASSUMES ";A1$;" AS CONDUCTION PATHS WITH AN AREA OF
";ABS(A1);" mm^2",LIN(1)
5380 PRINT "THERMAL CONDUCTIVITY OF THE ";A1$;" =";k1;" Watts/M-C"
5385 PRINT "_____________________________________________________________________
____________",LIN(2)
5390 PRINTER IS 16
5395 RETURN                                                   ! END OF Hard
5400 !
5405 Stowe: GOSUB Error
5410 Stow:  ! THIS SECTION PLACES THE DESCRIPTION OF THE CIRCUIT BOARD ON TAPE
5415 ON ERROR GOTO Stowe
5420 S$="RECORD BOARD DESCRIPTION ON MASS STORAGE"
5425 GOSUB Pagehead
5430 PRINT "    You may record all the data concerning the circuit board on any
available"
5435 PRINT "mass storage device.  This allows any user to retrieve the descripti
on at some"
5440 PRINT "later time without the need to input all the details.  This option o
ccurs both"
```

```
5445 PRINT "before and after the thermal analysis.  Enter desired data file na
me below,"
5450 PRINT "be sure to include the mass storage unit specifier if not the defaul
t."
5455 PRINT "For example     :T14 , :F8 , Y12 etc."
5460 Ans$="Y"
5465 INPUT "DO YOU DESIRE TO RECORD THE  DESCRIPTION DATA (Y or N)?",Ans$
5470 IF Ans$="BACK_UP" THEN RETURN
5480 IF UPC$(Ans$[1,1])="N" THEN RETURN
5485 IF Olde<>PI THEN 5505
5490 PRINT LIN(5),"THE PRESENT DESCRIPTIVE TITLE FOR THAT BOARD IS ";CHR$(132);P
ictlbl$;CHR$(128)
5495 EDIT "CHANGE THE TITLE OR PRESS CONT WITH NO ENTRY FOR NO CHANGE.",Pictlb
l$
5500 IF Pictlbl$="BACK_UP" THEN Stow
5505 Ans$=Name$
5510 EDIT "UNDER WHAT NAME DO YOU DESIRE TO STORE THE DATA (change below)?",Name
$
5515 IF Name$="BACK_UP" THEN 5490
5520 IF Name$=Ans$ THEN 5560
5525 Ans$="Y"
5530 DISP "DOES A DATA FILE WITH AT LEAST";40*Nreg+600;" BYTES EXIST UNDER THAT
NAME (Y or N)?";
5535 INPUT Ans$
5540 IF Ans$="BACK_UP" THEN 5505
5545 IF UPC$(Ans$[1,1])="Y" THEN 5560
5550 DISP "WORKING CREATING DATA FILE FOR ";Name$;" THAT IS";40*Nreg+600;"BYTE
S IN SIZE"
5555 CREATE Name$,1,40*Nreg+600
5560 ASSIGN #5 TO Name$
5565 PRINT LIN(3),"WORKING WRITING BOARD DESCRIPTION OF ";Pictlbl$;" ON MASS S
TORAGE"
5570 DISP
5575 READ #5,1
5580 PRINT #5;Name$,Pictlbl$,Case$,Bdl,Bdh,Sca,Nxr,Nyr,Nreg,Thick_b,Kb,Al,Kl,Tem
_sol
5585 FOR I=1 TO Nreg
5590 PRINT #5;Itype(I),X(I),Y(I),Tj(I),Pow(I),Rj_c(I)
5595 FOR J=1 TO 4
5600 PRINT #5;Nl(J,I)
5605 NEXT J
5610 NEXT I
5615 PRINT #5;END
5620 ASSIGN #5 TO *
5625 PRINTER IS 0
5630 PRINT LIN(2),"THE CIRCUIT LISTED BELOW IS STORED UNDER THE FILE NAME ";CHR$
(132);Name$;CHR$(128)
5635 PRINT LIN(2),SPA(25),Pictlbl$,LIN(2)
5640 PRINT SPA(25),"SAVE FOR YOUR RECORDS"
5645 PRINT "____________________________________________________________________
____________",LIN(2)
5650 PRINTER IS 16
5655 DISP
5660 RETURN
5665 Error:!
5670 BEEP
5675 WAIT 300
5680 IF ERRN=56 THEN Err_name
```

```
5685 PRINT LIN(2),SPA(10),"ERROR NUMBER";ERRN;"HAS OCURRED IN LINE";ERRL;".  PR
ESS CONT WHEN READY"
5690 DISP
5695 BEEP
5700 PAUSE
5705 RETURN
5710 !
5715 Err_name:! THIS SECTION FOR IMPROPER FILE NAME
5720 PRINTER IS 16
5725 PRINT PAGE
5730 Msus$="DEFAULT MASS STORAGE"
5735 FOR I=2 TO LEN(Name$)
5740 IF Name$[I,I]=":" THEN 5755
5745 NEXT I
5750 GOTO 5770
5755 Msus$=Name$[I]
5760 CAT Msus$
5765 GOTO 5775
5770 CAT
5775 PRINT LIN(2),CHR$(132);Name$[1,I-1];CHR$(128);" is NOT on ";Msus$;" with th
at spelling........."
5780 PRINT LIN(1),"CHECK OVER THE DIRECTORY ABOVE FOR CORRECT NAME.............
."
5785 DISP "PRESS CONT WHEN READY"
5790 PAUSE
5795 RETURN
```

APPENDIX D

```
10   !          THERML    .....THERMAL ANALYSIS PROGRAM FOR .....
20   !
30   !
40   ! *******************          THERMELEX            **********************
50   !
60   !                A SYSTEM OF PROGRAMS FOR THE HP 9845
70   !
80   !      TO PERFORM THERMAL ANALYSIS OF ELECTRONIC CIRCUIT BOARDS
90   !
100  ! ***********************************************************************
110  ! *                                                                     *
120  ! *                                                                     *
130  ! *       PREPARED AT THE NAVAL POSTGRADUATE SCHOOL MONTEREY, CA        *
140  ! *                                                                     *
150  ! *                       R. A. FOLTZ LCDR USN                          *
160  ! *                                                                     *
170  ! *                       |||||  THERML  |||||          ....... JUNE 1980 *
180  ! ***********************************************************************
190  !
200  OPTION BASE 1
210  PRINTER IS 16
220  DIM S$[70],Types$(0:14),Msus$[22],Ylbl$[25]
230  COM Map,Name$,Pictlbl$[50],Case$[50],Bdl,Bdh,Sca,Thick_b,Tem_sol,Kb,Al,K1
240  COM SHORT X(50),Y(50),Tj(50),Pow(50),Rj_c(50)
250  COM INTEGER Itype(50),Nl(4,50),Nxr,Nyr,Nreg
260  INTEGER Npin(15)
270  SHORT Ae(50),Re_cond(50),Re_conv(50),Rtote_b(50),Rtop_r(50),Rl(4,50),Rele(5
0),Rb_conv(50)
280  SHORT Wideset(14),Lenset(14)
290  SHORT Le(50),We(50),He(50),Te(50),Tair(50),A(50,50),B(50),Tb(50)
300  Map=INT(Map)
310  IF (Map=0) OR (Map>3) THEN Oldpict
320 Start_over:  ON Map GOTO Oldpict,Thermal,Thermal
330  GOTO Oldpict
340 Oldpicte: GOSUB Error
350 Oldpict: ! THIS SECTION RETRIEVES A BOARD DESCRIPTION OFF A MASS STORAGE DEV
ICE FOR THE PURPOSE OF DEBUGGING THERMAL
360  ON ERROR GOTO Oldpicte
370  Olde=PI
380  S$="BOARD DESCRIPTION FROM MASS STORAGE DEVICE"
390  GOSUB Pagehead
400  PRINT "    You have chosen to input the circuit board description in THERM
L directly"
410  PRINT "from a mass storage device.  This program in the THERMELEX System wi
ll NOT "
420  PRINT "allow graphical data checking and while faster, there is the chances
 that the"
430  PRINT "data is incorrect.  If you decide that it would be better to check t
he data"
440  PRINT "press K0 (Back_up) and BOARDS will be loaded from the DEFAULT ma
ss storage unit."
450  PRINT
460  PRINT "    The data file containing the board description must have been st
ored by "
470  PRINT "this program.  Enter the data file name below, be sure to include th
e mass "
480  PRINT "storage unit specifier if needed.(eg  :T14,:F8,:V12  etc)"
490  PRINT LIN(1),"    Do NOT use quotes"
```

THERML .. THERMAL ANALYSIS FOR THERMELE:

```
500  EDIT "UNDER WHAT FILE NAME IS THE CIRCUIT BOARD FILED (change or enter belo
w)",Name$
510  IF Name$="BACK_UP" THEN 530
520  GOTO 550
530  Map=1
540  LOAD "BOARDS",1
550  ASSIGN #1 TO Name$
560  READ #1,1
570  READ #1;Name$,Pictlbl$,Case$,Bdl,Bdh,Sca,Nxr,Nyr,Nreg,Thick_b,Kb,Al,Kl,Tem_
sol
580  FOR I=1 TO Nreg
590  READ #1;Itype(I),X(I),Y(I),Tj(I),Pow(I),Rj_c(I)
600  FOR J=1 TO 4
610  READ #1;Nl(J,I)
620  NEXT J
630  NEXT I                                                          ! END OF OLDPICT
640  !
650  GOTO Thermal
660 Thermale: GOSUB Error
670 Thermal:  ! THIS SECTION IS THE MAIN INPUT AND CALLING ROUTINE
680  ON ERROR GOTO Thermale
690  S$="THERMAL ANALYSIS OF"
700  GOSUB Pagehead
710  PRINT TAB(37-LEN(Pictlbl$)/2);CHR$(133);Pictlbl$;CHR$(128);LIN(2)
720  PRINT "   This section assumes you have completely and correctly described
the board"
730  PRINT "itself.  You will be asked questions concerning ONLY the environment
."
740  PRINT "    The first questions are concerned with the cooling air supply.
Recall the"
750  PRINT "direction of air flow on the graphics picture is assumed to be left
to right."
760  PRINT "The clearance between the boards is used to determine the velocity o
f the "
770  PRINT "cooling air.",LIN(2)
780  Ans$="20"
790  Map=0
800  INPUT "ENTER THE INLET TEMPERATURE OF THE COOLING AIR (deg C)",Ans$
810  IF Ans$="BACK_UP" THEN Start_over
820  Tair=VAL(Ans$)
830  PRINT "    INLET AIR TEMP Tair=";Tair;"deg C"
840  Tair=Tair+273   ! ALL CALCULATIONS DONE IN ABSOLUTE TEMP
850  Ans$=".0005"
860  INPUT "ENTER THE AIR SUPPLY PER BOARD (M^3/SEC)",Ans$
870  IF Ans$="BACK_UP" THEN Thermal
880  Fair=VAL(Ans$)
890  PRINT "    FLOW RATE OF AIR=";Fair;"M^3/Sec"
900  Ans$="15.24"
910  INPUT "ENTER THE DISTANCE FROM THE FACE OF THE BOARD TO THE NEXT OBJECT (mm
)",Ans$
920  IF Ans$="BACK_UP" THEN 780
930  Zb=VAL(Ans$)
940  PRINT "    BOARD SPACING=";Zb;"mm"
950  Zb=Zb*.001
960  Ans$="NULL"
970  INPUT "ALL OK?..PRESS CONT ANY ENTRY FOLLOWED BY CONT WILL ALLOW REENTR
Y OF ALL",Ans$
980  IF Ans$="NULL" THEN 1000
```

```
990  GOTO Thermal
1000 S$="CONVERGENCE CRITERIA"
1010 GOSUB Pagehead
1020 PRINT "   Convergence is indicated by successive itterations that result in
 element"
1030 PRINT "temperatures that differ only by some small amount.  Each element te
mperature"
1040 PRINT "is compared to that obtained in the previous itteration and if the l
argest"
1050 PRINT "difference is less than a maximum specified error, results are print
ed."
1060 PRINT
1070 PRINT "   Typically two or three itterations result in a maximum difference
 on the"
1080 PRINT "order of one degree centigrade when solving for temperatures and fou
r or five"
1090 PRINT "itterations will result in a maximum difference on the order of .1 W
att when "
1100 PRINT "solving for powers."
1110 IF Tem_sol=1 THEN Ans$=".5"
1120 IF Tem_sol=0 THEN Ans$="1"
1130 IF Tem_sol=1 THEN INPUT "ENTER THE MAXIMUM DIFFERENCE BETWEEN ITTERATIONS (
deg C) DEFAULT=.5",Ans$
1140 IF Tem_sol=0 THEN INPUT "ENTER THE MAXIMUM PERCENT CHANGE BETWEEN ITTERATIO
NS (Watt) DEFAULT=1%",Ans$
1150 IF Ans$="BACK_UP" THEN Thermal
1160 Errmax=ABS(VAL(Ans$))
1170 GOSUB Database ! THE FOLLOWING LINES FORM THE MAIN CALLING ROUTINE
1180 GOSUB Calc0
1190 GOSUB Calc1
1200 GOSUB Calc_air
1210 GOSUB Calc_t
1220 GOSUB Calc2
1230 GOSUB Debug
1240 GOSUB Solve
1250 GOSUB Units
1260 IF Bomb=1 THEN 1280
1270 GOSUB Output
1280 GOSUB What_now
1290 IF Map=0 THEN GOTO Thermal
1300 GOTO Oldpict
1310 !
1320 ! END OF THE MAIN CONTROL SECTION OF THE PROGRAM THERML
1330 !
1340                                                  ! *********DATABASE********
1350 Database: !  IN THIS SECTION MANY OF THE CONSTANTS USED IN THE CALCULATIONS
1360           !  ARE READ IN FROM THE DATA LINES BELOW
1370 DISP "WORKING ON NON-CHANGING PARAMETERS"
1380 PRINT PAGE
1390 Axpin=4.3E-7          !X-SECTIONAL AREA FOR PINS (M^2)
1400 Aspin=1E-5            !SURFACE AREA FOR PINS     (M^2)
1410 Beta=3.33E-3          !VOL COEFF OF EXPA. AIR    (1 deg K)  AT 300 deg K
1420 Cpa=1.006E3           !SPECIFIC HEAT OF AIR      (WATT-SEC/kg-deg K)
1430 Dis=.001              !AVG DISTANCE FROM BOTTOM OF DIP TO BOARD
1440 Epsb=.8               !EMMISIVITY OF THE SURFACE OF BOARD
1450 Epse=.9               !EMMISIVITY OF THE DIP SURFACE
1460 G=9.81                !GRAVITY                   (M/Sec^2)
1470 Gnu=1.684E-5          !KINEMATIC VISCOSITY AIR   (M^2/Sec)
```

```
1480 Hec=.003                !HEIGHT OF CERAMIC DIP PACKAGE -******|||||||| check
1490 Hep=.005                !HEIGHT OF PLASTIC DIP PACKAGE -******|||||||| CHECK
1500 Ks=59                   !THERMAL COND OF STEEL      (WATTS/M-deg K)
1510 Kair=.026               !THERMAL COND OF AIR        (WATTS/M-deg K)  300 deg K
1520 Kpin=384                !THERMAL COND OF PINS       (WATTS/M-deg K)
1530 Lpin=.0025              !AVG LENGHT OF PINS         (M)
1540 Mu=1.983E-5             !DYNAMIC VISCOSITY 300 K    (Kg/M-Sec)
1550 Pr=.703                 !PRANDTL NUMBER             (AT 300deg K)
1560 Rho=1.1774              !DENSITY OF AIR AT 300 K    (Kg/M^3)
1570 Sig=5.67E-8             !STEFFAN-BOLTZMAN           (W/M^2-deg K^4)
1580 Itt=0
1590 RESTORE 1630
1600 FOR I=1 TO 14           ! THIS READS THE CASE WIDTHS FOR EACH TYPE
1610 READ Wideset(I)
1620 NEXT I
1630 DATA .25,.725,.25,.825,.55,1.25,0,0,.6,1,.18,.35,.48,.72     ! ALL IN INCHES
1640 FOR I=1 TO 14           ! THIS READS THE CASE LENGTHS FOR EACH TYPE
1650 READ Lenset(I)
1660 NEXT I
1670 DATA .725,.25,.825,.25,1,.55,0,0,1,.6,.18,.35,.48,.72         ! ALL IN INCHES
1680 MAT Wideset=(25.4)*Wideset                                    ! CONVERT TO mm
1690 MAT Lenset=(25.4)*Lenset
1700 FOR I=1 TO 14           ! THIS READS THE # OF PINS FOR EACH TYPE
1710 READ Npin(I)
1720 NEXT I
1730 DATA 14,14,16,16,24,24,0,0,20,20,16,24,40,64
1740 FOR I=0 TO 14           ! THIS READS THE CASE LABELS FOR EACH TYPE
1750 READ Type$(I)
1760 NEXT I
1770 DATA EMPTY,DIP 14,DIP 14,DIP 16,DIP 16,DIP 24,DIP 24,NULL,NULL,DIP 40,DIP 4
0,FLAT16,FLAT24,FLAT40,FLAT64
1780 FOR I=1 TO Nreg
1790 IF Itype(I)=0 THEN 1830
1800 Le(I)=Lenset(Itype(I))
1810 We(I)=Wideset(Itype(I))
1820 GOTO 1840
1830 We(I)=Le(I)=0
1840 NEXT I
1850 IF Tem_sol=1 THEN MAT Ts=(300)  ! INITIAL GUESS FOR TEMP CASE = 27 deg C
1860 IF Tem_sol=0 THEN MAT Pow=(.25)   ! INITIAL GUESS FOR POWER = .25 Watts
1870 MAT Le=(.001)*Le
1880 MAT We=(.001)*We
1890 MAT X=(.001)*X
1900 MAT Y=(.001)*Y
1910 MAT As=Le.We
1920 MAT Hs=(Hec)      ! ASSUME ALL CERAMIC MAKE CORRECTIONS AS NEEDED IN Calc0
1930 Bdl=Bdl*.001
1940 Bdh=Bdh*.001
1950 Areg=Bdl*Bdh/Nreg
1960 Hr=Bdh/Nyr
1970 Lr=Bdl/Nxr
1980 Thick_b=Thick_b*.001
1990 Al=Al*1E-6
2000 RETURN                                          ! END OF DATABASE
2010 !
2020 Calc0e:GOSUB Error
2030 Calc0:! ON ERROR GO TO CALC0E
2040 Powtot=Navg=Heavg=Weavg=0
```

```
2050 FOR I=1 TO Nreg
2060 IF Case$[I,I]="1" THEN He(I)=Hep
2070 IF Itype(I)=0 THEN 2120
2080 Powtot=Powtot+Pow(I)
2090 Weavg=Weavg+(We(I)+.001)/Nreg   ! AVG WIDTH INCLUDING PINS
2100 Heavg=Heavg+(He(I)+Lpin)/Nreg   ! AVG HEIGHT INCLUDING PINS
2110 Navg=Navg+1/Nor                 ! NUMBER OF ELEMENTS IN AN AVG CROSS SECTION
2120 NEXT I
2130 Aair=Bdh*Zb-Navg*Weavg*Heavg
2140 Perim=2*Bdh+2*Navg*Heavg+2*Zb
2150 Fr=1+5*(Perim-2*Bdh-2*Zb)/Perim                 ! ROUGHNESS FACTOR
2160 Dh=4*Aair/Perim
2170 Vair=Fair/Aair
2180 Re=Vair*Dh/Gnu
2190 IF Re>1000 THEN Hbf=.023*Kair/Dh*Re^.8          ! TURBULENT AT 1000 DUE
2200 !                                               ! TO MANY TRIPS OF COMPS
2210 IF Re<=1000 THEN Hbf=5.40*Kair*Fr/Dh            ! LAMINAR FOR 1/Gz>.05
2220 !
2230 R1_hor=Lr/(K1*ABS(A1))
2240 R1_ver=Hr/(K1*ABS(A1))
2250 Rb_hor=Lr/(kb*Hr*Thick_b)
2260 Rb_ver=Hr/(kb*Lr*Thick_b)
2270 RETURN                                                  ! END OF CALC0
2280 !
2290 Calc1e:GOSUB Error
2300 Calc1: ! THIS SECTION COMPUTES SOME OF THE NON-CHANGING PARAMETERS
2310 ON ERROR GOTO Calc1e
2320 FOR I=1 TO Nreg
2330 ! BELOW HERE WE CALCULATE THE CONVECTIVE LOSSES FOR EACH BOARD REGION
2340 IF X(I)/Dh>10 THEN 2390                 ! OUTSIDE OF THE DEVELOPMENT REGION
2350 Gz=Re*Pr*Dh/X(I)
2360 Hb=.664*Kair*(1.1*Dh/X+SQR(Gz*(1+7.3*SQR(Pr*Gz))/Pr)*Fr   ! Eq 13.48 KNUTZEN
& KATZ LAMINAR IN DEVELOPMENT REGION
2370 IF 1/Gz>.05 THEN 2390
2380 GOTO 2400
2390 Hb=Hbf
2400 Aregtot=2*Areg-Ae(I)
2410 Rb_conv(I)=1/(Hb*Aregtot)
2420 ! NOW WE GET TO THE ELEMENTS ON THE BOARD
2430 IF Itype(I)=0 THEN 2640        ! IF NO ELEMENT THEN SET VERY HIGH RESISTANCE
2440 IF Itype(I)<11 THEN 2480
2450 Dis=.1*Dis
2460 Lpin=.1*Lpin
2470 Aspin=.1*Aspin
2480 Rpins_cond=Lpin/(Kpin*Aspin*Npin(Itype(I)))
2490 Rgap_cond=Dis/(Kair*Ae(I))
2500 IF Itype(I)<11 THEN 2540
2510 Dis=10*Dis
2520 Lpin=10*Lpin
2530 Aspin=10*Aspin
2540 Re_cond(I)=Rpins_cond*Rgap_cond/(Rpins_cond+Rgap_cond)
2550 Ablas=Ae(I)+2*Le(I)*He*Aspin*Npin(Itype(I))
2560 Heblas=Hb
2570 IF I<6 THEN Hb(I)=Hb
2580 Reblas=1/(Heblas*Ablas)
2590 Hestag=.57*Kair*Pr^.4*SQR(Vair/(We(I)*Gnu))
2600 Astag=2*We(I)*He(I)
2610 Restag=1/(Hestag*Astag)
```

(5)

```
2620 Re_conv(I)=Reblas*Restag/(Reblas+Restag)
2630 GOTO 2660
2640 Re_conv(I)=1E30
2650 Re_cond(I)=1E30
2660 ! BELOW HERE CALCULATE THE BOARD CONDUCTIVE RESISTANCE
2670 J=1  ! HERE IS BOTTOM OF REGION
2680 IF I+Nxr>=Nreg THEN 2720
2690 IF N1(J,I)=0 THEN 2740
2700 R1(J,I)=R1_ver/N1(J,I)*Rb_ver/(R1_ver/N1(J,I)+Rb_ver)
2710 GOTO 2750
2720 R1(J,I)=Rb_ver/2E-40
2730 GOTO 2750
2740 R1(J,I)=Rb_ver
2750 J=2  ! HERE IS RIGHT SIDE OF REGION
2760 IF I MOD Nxr=0 THEN 2800
2770 IF N1(J,I)=0 THEN 2820
2780 R1(J,I)=R1_hor/N1(J,I)*Rb_hor/(R1_hor/N1(J,I)+Rb_hor)
2790 GOTO 2830
2800 R1(J,I)=Rb_hor/2E-40
2810 GOTO 2830
2820 R1(J,I)=Rb_hor
2830 J=3   ! HERE IS THE TOP OF THE REGION
2840 IF I<=Nxr THEN 2880
2850 IF N1(J,I)=0 THEN 2900
2860 R1(J,I)=R1_ver/N1(J,I)*Rb_ver/(R1_ver/N1(J,I)+Rb_ver)
2870 GOTO 2910
2880 R1(J,I)=Rb_ver/2E-40
2890 GOTO 2910
2900 R1(J,I)=Rb_ver
2910 J=4  ! HERE IS THE LEFT SIDE OF THE REGION
2920 IF (I-1) MOD Nxr=0 THEN 2960
2930 IF N1(J,I)=0 THEN 2980
2940 R1(J,I)=R1_hor/N1(J,I)*Rb_hor/(R1_hor/N1(J,I)+Rb_hor)
2950 GOTO 3000
2960 R1(J,I)=Rb_hor/2E-40
2970 GOTO 3000
2980 R1(J,I)=Rb_hor
2990 GOTO 3010
3000 Rb_conv(I)=1/(Hb*Areqtot)
3010 NEXT I
3020 !
3030 RETURN                                                    ! END OF CALC:
3040 !
3050 Calc_te:GOSUB Error
3060 Calc_t:! THIS SECTION DETERMINES SURFACE TEMP FROM JUNCTION TEMP AND Rj_c
3070 ON ERROR GOTO Calc_te
3080 IF Tem_sol=1 THEN RETURN
3090     FOR I=1 TO Nreg
3100     Te(I)=Tj(I)-Pow(I)*Rj_c(I)
3110     IF Te(I)<Tair(I)*1.1 THEN Te(I)=Tair(I)*1.1
3120     NEXT I
3130 RETURN                                                    !END OF Calc_t
3140 Calc2e:GOSUB Error
3150 Calc2: ! THIS SECTION CONTAINS THOSE PARAMETERS WHICH CHANGE WITH TEMPS
3160 ON ERROR GOTO Calc2e
3170 DISP "WORKING ON CHANGING PARAMETERS"
3180 FOR I=1 TO Nreg
3190 IF Itype(I)<>0 THEN 3230
```

```
3200 Rtop_r(I)=1E50
3210 Rgap_rad=1E50
3220 GOTO 3250
3230 Rgap_rad=(Epse+Epsb-Epse*Epsb)/(4*Sig*Epse*Epsb*Ae(I)*Te(I)^3)
3240 Rtop_r(I)=((1-Epsb)/(Epsb*Areg)+10/Areg+(1-Epse)/(Ae(I)*Epse))/(4*Sig*Te(I)
^3)
3250 Rtote_b(I)=Rgap_rad*Re_cond(I)/(Rgap_rad+Re_cond(I))
3260 Rele(I)=Re_conv(I)+Rtote_b(I)        !!!! MUST BE SUM FOR ALGEBRAIC PERSONS
3270 NEXT I
3280 RETURN                                                        ! END OF CALC2
3290 !
3300 Calc_aire:GOSUB Error
3310 Calc_air:! THIS SECTION FINDS THE AIR TEMPS FOR EACH REGION BASED ON POWER
3320 ON ERROR GOTO Calc_aire
3330 Cfr=Cpa*Fair*Rho
3340 Powtot=0
3350    FOR I=1 TO Nreg
3360    Powtot=Powtot+Pow(I)
3370    Tair(I)=Tair+.5*Pow(I)*Nyr/Cfr
3380    IF (I-1) MOD Nxr=0 THEN 3420
3390        FOR K=I-1 TO I-(I-1) MOD Nxr STEP -1
3400        Tair(I)=Tair(I)+Pow(K)*Nyr/Cfr
3410        NEXT K
3420    NEXT I
3430 Tout=Tair+Powtot/Cfr
3440 RETURN                                                  ! END OF CALC_AIR
3450 !
3460 Solvee:GOSUB Error
3470 Solve: ! THIS SECTION SOLVES THE PROBLEM
3480 ON ERROR GOTO Solvee
3490 DISP "WORKING ON SETTING UP THE MATRIX"
3500 Itt=Itt+1
3510 BEEP
3520 WAIT 300
3530 BEEP
3540 GOSUB Set_up
3550 GOSUB Elu
3560 Err=0
3570 Tmax=0
3580 Pmin=1000
3590 IF Tem_sol=1 THEN 3730
3600     FOR I=1 TO Nreg
3610     Pnew=(Te(I)-B(I))/Rtote_b(I)+(Te(I)-Tair(I))/Re_conv(I)+(Te(I)-B(I))/Rt
op_r(I)
3620     IF Pnew<0 THEN Pnew=Pow(I)/2
3630     IF Pnew<Pmin THEN Pmin=Pnew
3640     IF ABS((Pow(I)-Pnew)/Pow(I))>Err THEN Err=ABS((Pow(I)-Pnew)/Pow(I))
3650     Pow(I)=Pnew
3660     NEXT I
3670  Tmax=500
3680  MAT Tb=B
3690  IF Err<Errmax/100 THEN 3840
3700  GOSUB Calc_t
3710  GOSUB Calc_air
3720  GOTO 3920
3730      FOR I=1 TO Nreg
3740      Tnew=(Pow(I)+Rtote_b(I)*Re_conv(I)+B(I)*Re_conv(I)+Tair(I)*Rtote_b(I))
/Rele(I)
```

```
3750      IF ABS(Te(I)-Tnew)>Err THEN Err=ABS(Te(I)-Tnew)
3760      Te(I)=Tnew
3770      Tj(I)=Te(I)+Pow(I)*Rj_c(I)
3780      IF Tj(I)>Tmax THEN Tmax=Tj(I)
3790      NEXT I
3800 Pmin=0
3810 MAT Tb=B
3820 MAT A=ZER
3830 IF Err>Errmax THEN 3920
3840 DISP
3850 FOR C=1 TO 4
3860 BEEP
3870 WAIT 90
3880 BEEP
3890 WAIT 150
3900 NEXT C
3910  RETURN
3920 GOSUB Temp_print
3930 IF (Itt>30) OR (Err>200) OR (Tout>400) THEN GOTO Bomb
3940 GOSUB Calc2
3950 GOTO Solve                                                    ! END OF SOLVE
3960 !
3970 Set_up:! THIS SECTION SETS UP THE Nreg SIMUL EQUATIONS IS MATRIX FORM
3980 FOR I=1 TO Nreg
3990 IF Tem_sol=0 THEN B(I)=Te(I)/Rtote_b(I)+Tair(I)/Rb_conv(I)
4000 IF Tem_sol=1 THEN B(I)=(Pow(I)*Re_conv(I)+Tair(I))/Rele(I)+Tair(I)/Rb_conv(
I)
4010 Ledge=Redge=Tedge=Bedge=1
4020 IF (I-1) MOD Nxr=0 THEN Ledge=2
4030 IF I MOD Nxr=0 THEN Redge=2
4040 IF I<=Nxr THEN Tedge=2
4050 IF I+Nxr>=Nreg THEN Bedge=2
4060 IF (I-1) MOD Nxr=0 THEN 4080
4070 A(I,I-1)=-1/R1(4,I)
4080 IF I MOD Nxr=0 THEN 4100
4090 A(I,I+1)=-1/R1(2,I)
4100 IF I<=Nxr THEN 4120
4110 A(I,I-Nxr)=-1/R1(3,I)
4120 IF I+Nxr>=Nreg THEN 4140
4130 A(I,I+Nxr)=-1/R1(1,I)
4140 A(I,I)=(Bedge=1)/R1(1,I)+(Redge=1)/R1(2,I)+(Tedge=1)/R1(3,I)+(Ledge=1)/R1(4
,I)+1/Rtote_b(I)+1/Rb_conv(I)-(Tem_sol=1)*Re_conv(I)/(Rele(I)*Rtote_b(I))
4150 NEXT I
4160 RETURN                                                        ! END OF SET_UP
4170 !
4180 Elu:  ! THIS SECTION PERFORMS A LU DECOMPOSITION OF THE 'A'MATRIX
4190 DISP "WORKING ON ITERATION NUMBER ";Itt
4200 Nm1=Nreg-1
4210     FOR K=1 TO Nm1
4220     Kp1=K+1
4230         FOR I=Kp1 TO Nreg
4240         G=-A(I,K)/A(K,K)
4250         A(I,K)=G
4260             FOR J=Kp1 TO Nreg
4270             A(I,J)=A(I,J)+G*A(K,J)
4280             NEXT J
4290         NEXT I
4300     NEXT K
```

```
4310 Solver:        ! THIS SECTION SOLVES THE NEW MATRIX AND PLACES THE ANSWERS
4320 Np1=Nreg+1     ! INTO MATRIX B TO BE PASSED BACK TO SOLVE
4330      FOR K=1 TO Nm1
4340      Kp1=K+1
4350          FOR I=Kp1 TO Nreg
4360          B(I)=B(I)+A(I,K)*B(K)
4370          NEXT I
4380      NEXT K
4390 B(Nreg)=B(Nreg)/A(Nreg,Nreg)
4400      FOR K=2 TO Nreg
4410      I=Np1-K
4420      J1=I+1
4430          FOR J=J1 TO Nreg
4440          B(I)=B(I)-A(I,J)*B(J)
4450          NEXT J
4460      B(I)=B(I)/A(I,I)
4470      NEXT K
4480 RETURN                                                    ! END OF SOLVER
4490 Temp_print:! THIS SECTION USED FOR INTERMEDIATE OUTPUT
4500 EXIT GRAPHICS
4510 IF (Temprt=1) AND (Ans=PI) THEN PRINTER IS 0
4520       PRINT SPA(10),"DATA FOR ";Pictlbl$;"     #";Itt;"ITTERATION"
4530       PRINT LIN(2)
4540 FIXED 2
4550       PRINT "REG #   Tcase (DegC)   Tjunc (DegC)  Treg (DegC)  Pow
(W)  Rj-c(W/C)"
4560       FOR I=1 TO Nreg
4570       PRINT I;TAB(12),Te(I)-273;TAB(26),Tj(I)-273;TAB(41),Tb(I)-273;TAB(53),
Pow(I);TAB(62),Rj_c(I)
4580       NEXT I
4590       PRINT LIN(2)
4600       PRINT "BOARD THICKNESS=";1000*Thick_b;"mm  AND CONDUCTIVITY =";Kb;"Wat
ts/M-K"
4610       PRINT
4620 GOTO 4680    !   PRINT " I        RB_CONV       RE_CONV        TE          Hb"
4630       FOR I=1 TO 5
4640       PRINT USING 4660;I,Rb_conv(I),Re_conv(I),Te(I)-273,Hb(I)
4650       NEXT I
4660   IMAGE DD,4X,4(4D.4D,4X)
4670   PRINT
4680       FIXED 4
4690   PRINT "COOLING AIR FLOW OF ";Fair;"M^3 per SEC    VEL=";Vair;"M/Sec","(";
Vair*39/3;"FT/S)",LIN(1)
4700   PRINT "INLET AIR TEMP=";Tair-273;" deg C   OUTLET AIR TEMP=";Tout-273;"de
g C"
4710 PRINT LIN(2),"LARGEST DIFFERENCE BETWEEN ITTERATIONS =";Err;"*****"
4720 PRINT "____________________________________________________________________
___________",LIN(2)
4730       PRINTER IS 16
4740       STANDARD
4750       RETURN
4760 Debug: Ans$="N"! TEMP DEBUG FOR RESISTANCES
4770  RETURN !
4780 INPUT "DO YOU WISH TO HAVE A LIST OF ALL THE RESISTANCES PRINTED (NO or YES
)?",Ans$
4790 IF UPC$(Ans$[1,1])="N" THEN RETURN
4800 PRINTER IS 0
4810 FIXED 5
```

```
4820 PRINT "   REG#    RE COND   RE CONV   RTOTE B    RTOP R      RB
CONV"
4830 FOR I=1 TO Nreg
4840 ! PRINT TAB(2),I,TAB(4),Re_cond(I),TAB(4);Re_conv(I),TAB(4),Rtote_b(I);TAB(
5);Rtop_r(I);TAB(4);Rele(I)
4850  PRINT TAB(2),I;Re_cond(I);Re_conv(I);Rtote_b(I);Rtop_r(I);Rb_conv(I)
4860 NEXT I
4870 PRINTER IS 16
4880 STANDARD
4890 RETURN
4900 Units:! THIS SECTION CONVERTS FROM METER TO mm
4910 Bdl=1000*Bdl! HERE CORRECT UNITS FOR USE IN GRAPHICS AND TO REWORK ANALYSIS
4920 Bdh=1000*Bdh
4930 MAT X=(1000)*X
4940 MAT Y=(1000)*Y
4950 MAT Le=(1000)*Le
4960 MAT We=(1000)*We
4970 Thick_b=1000*Thick_b
4980 Al=Al*1E6
4990 RETURN                                                    ! END OF Units
5000 !
5010 Output: GOSUB Error
5020 Output:! THIS SECTION OUTPUTS TO GRAPHICS ON A BLANK BOARD
5030 ON ERROR GOTO Output
5040 PLOTTER IS "GRAPHICS"
5050 GRAPHICS
5060 MSCALE 0,10
5070 CSIZE 2
5080 LORG 5
5090 MOVE 18,130
5100 LABEL "---air flow----> "
5110 CSIZE 3
5120 Bdh=Bdh/Sca
5130 Bdl=Bdl/Sca
5140 IF Sca=1 THEN 5220
5150 LORG 6
5160 LDIR PI/2
5170 MOVE 175,70
5180 IF Sca>1 THEN LABEL "THIS PICTURE IS 1/"&VAL$(Sca)&" SIZE"
5190 IF Sca<1 THEN LABEL "THIS PICTURE IS 2X SIZE"
5200 LORG 5
5210 LDIR 0
5220 MOVE 100-LEN("OUTPUT DATA FOR "&Pictlbl$)/2,135
5230 LABEL USING "K";"OUTPUT DATA FOR "&Pictlbl$
5240 MOVE 0,0
5250 DRAW 0,Bdh
5260 DRAW Bdl,Bdh
5270 DRAW Bdl,0
5280 DRAW 0,0
5290 LINE TYPE 3
5300 Lr=Bdl/Nxr                          ! LR = LENGTH OF EACH REGION
5310 Hr=Bdh/Nyr                          ! HR = HEIGHT OF EACH REGION
5320    FOR I=1 TO Nxr-1
5330    MOVE I*Lr,0
5340    DRAW I*Lr,Bdh
5350  NEXT I
5360    FOR I=1 TO Nyr-1
5370    MOVE 0,I*Hr
```

```
5380    DRAW Bdl,I*Hr
5390  NEXT I
5400 LINE TYPE 1
5410 LORG 8
5420 Nr=0
5430 CSIZE 2.4
5440      FOR I=1 TO Nreg
5450      MOVE X(I)-.35*Lr,Y(I)+.35*Hr
5460      LABEL USING "K";VAL$(I)
5470      MOVE X(I)+.3*Lr,Y(I)+.25*Hr
5480      LABEL USING "K";Type$(Itype(I))
5490      IF Itype(I)=0 THEN 5570
5500      IF Tj(I)-273<.95*(Tmax-273) THEN LABEL USING 5610;Tj(I)-273
5510      IF Tj(I)-273>=.95*(Tmax-273) THEN LABEL USING 5600;Tj(I)-273
5520      IF Pow(I)<=1.05*Pmin THEN LABEL USING 5630;Pow(I)
5530      IF Pow(I)>1.05*Pmin THEN LABEL USING 5620;Pow(I)
5540      LABEL USING 5610;Te(I)-273
5550      GOTO 5590
5560      !
5570      LABEL USING "K";""
5580      LABEL USING 5610;Tb(I)-273
5590    NEXT I
5600  IMAGE "**",DDD.D," C"
5610  IMAGE DDD.D," C"
5620  IMAGE D.DDD," W"
5630  IMAGE "**",D.DDD," W"
5640  FIXED 4
5650  DUMP GRAPHICS
5660  PRINTER IS 0
5670  PRINT SPA(20),"                                  "
5680  PRINT SPA(20),"|____________|            |__________|"
5690  PRINT SPA(20),"|   TYPE     |            |  EMPTY   |"
5700  PRINT SPA(20),"|  Tjunc     |    or      |          |"
5710  PRINT SPA(20),"|    POW     |            | Tboard   |"
5720  PRINT SPA(20),"|  Tcase     |            |          |"
5730  PRINT SPA(20),"|____________|            |__________|"
5740   PRINT LIN(2)
5750   PRINT SPA(14);" FLOW RATE        VELOCITY      Tin        Tout "
5760      PRINT USING 5800;"COOLING AIR ";Fair;"M^3/Sec";Vair;"M/Sec";Tair-273;"
deg C";Tout-273;"deg C"
5770 STANDARD
5780 IF Tem_sol=0 THEN PRINT USING 5810;"LARGEST CHANGE IN POWER BETWEEN ITTERAT
IONS #";Itt-1;" AND #";Itt;" = ";Err
5790 IF Tem_sol=1 THEN PRINT USING 5810;"LARGEST CHANGE IN TEMP BETWEEN ITTERATI
ONS #";Itt-1;" AND #";Itt;" = ";Err
5800  IMAGE 11A,2X,.4D,7A,2X,DD.4D,5A,2X,3D.D,5A,2X,3D.D,5A
5810  IMAGE //45A,DD,6A,DD,A,DD.4D
5820  ! MORE OF THE CIRCUIT DESCRIPTION CAN BE PRESENTED HERE
5830  PRINT LIN(1),"CIRCUIT BOARD DESCRIPTION IS STORED UNDER ";CHR$(132);Name$;
CHR$(128)
5840  PRINT "________________________________________________________________
_____________",LIN(2)
5850  PRINTER IS 16
5860  EXIT GRAPHICS!
5870 RETURN                                                    ! END OF OUTPUT
5880 !
5890 What_nowe:GOSUB Error
5900 What_now:! THIS SECTION PRESENTS THE VARIOUS OPTIONS AVAILABLE AND DIRECTS
```

```
5910          ! PROGRAM CONTROL AS NEEDED
5920 ON ERROR GOTO What_nowe
5930 S$="WHAT NOW ?"
5940 GOSUB Pagehead
5950 PRINT TAB(15),"You have completed the thermal analysis of :"
5960 PRINT TAB(37-LEN(Pictlbl$)/2);CHR$(129);Pictlbl$;CHR$(128)
5970 PRINT TAB(17),"the options available are listed below:"
5980 PRINT LIN(1),TAB(5),"1.  CHANGE COOLING AIR PARAMETERS AND RE-ANALYZE ";CHR
$(132);Name$;CHR$(128);"."
5990 PRINT LIN(1),TAB(5),"2.  SENSITIVITY ANALYSIS FOR CHANGES IN COOLING AIR PA
RAMETERS OF ";CHR$(132);Name$;CHR$(128);"."
6000 PRINT LIN(1),TAB(5),"3.  MAKE CHANGES TO BOARD DESCRIPTION IN FILE NAME ";C
HR$(132);Name$;CHR$(128);"."
6010 PRINT LIN(1),TAB(5),"4.  RETRIEVE A NEW BOARD DESCRIPTION FROM MASS STORAGE
."
6020 PRINT LIN(1),TAB(5),"5.  INPUT A NEW BOARD DESCRIPTION FROM THE KEYBOARD."
6030 PRINT LIN(1),TAB(5),"6.  TERMINATE SESSION"
6040 Map=Bomb=0
6050 Ans$="1"
6060 INPUT "YOUR CHOICE FROM ABOVE (1,2,3,4,5,6)?",Ans$
6070 IF Ans$="BACK_UP" THEN RETURN
6080 Ans=INT(VAL(Ans$))
6090 IF (Ans>0) AND (Ans<=6) THEN 6120
6100 GOSUB Errin
6110 GOTO What_now
6120 ON Ans GOSUB Redo,Sensi,Change,Get_new,Key_new,Terminate
6130 IF Ans=1 THEN RETURN
6140 GOTO What_now
6150 Redo: RETURN ! THIS WILL ALLOW RESTART OF THIS PROGRAM WITH SAME BOARD
6160 !
6170 Sensie:GOSUB Error
6180 Sensi:! THIS SECTION PRODUCES PLOTS OF OUTPUT VS COOLING AIR PARAMETERS
6190 ON ERROR GOTO Sensie
6200 S$="SENSITIVTY ANALYSIS"
6210 GOSUB Pagehead
6220 PRINT "    This section allows you to investigate the effects of variations
 in the air flow rate.  ";
6230 IF Tem_sol=1 THEN PRINT "Plots of Maximum Junction Temperature vs Flow Rate
 of the air are produced"
6240 IF Tem_sol=0 THEN PRINT "Plots of Minumum Power vs Flow rate of the air are
 produced."
6250 PRINT "    You specify the maximum flow rate per board (M^3/sec) and five s
eparate "
6260 PRINT "analyses are performed and the results plotted.  NOTE: selecting a m
aximum flow"
6270 PRINT "that is evenly divisable by five (5,10,30) will result in better loo
king axes.",LIN(1)
6280 PRINT "These plots may be produced on either the screen (with hard copy via
 Key3) or "
6290 PRINT "on a peripheral plotter such as the Hp 9872A.  In addition a printed
 tabular"
6300 PRINT "output of the results at each of the airflow rates may be produced."
6310 PRINT
6320 Ans$="NULL"
6330 INPUT "WHAT IS THE UPPER LIMIT ON THE AIR FLOW RATE FOR THE SENSITIVITY ANA
LYSIS?",Ans$
6340 IF Ans$="BACK_UP" THEN What_now
6350 IF Ans$="NULL" THEN 6320
```

```
6360 Ans=ABS(VAL(Ans$))
6370 Xmax=Ans
6380 Xmin=0
6390 Xstep=(Xmax-Xmin)/5
6400 Ymin=0
6410 Mult=100000
6420 IF Xmax>=.001 THEN Mult=10000
6430 IF Xmax>=.01 THEN Mult=1000
6440 IF Xmax>=.1 THEN Mult=100
6450 Ans$="N"
6460 INPUT "DO YOU WISH TO HAVE TABULAR RESULTS FOR EACH OF THE AIR FLOWS?(N or
Y)",Ans$
6470 IF Ans$="BACK_UP" THEN Sensi
6480 Temprt=0
6490 IF UPC$(Ans$)="Y" THEN Temprt=1
6500 GOSUB Database
6510 Map=1
6520 IF Tem_sol=1 THEN 6550
6530 FOR Fair=Xmax TO Xstep STEP -Xstep
6540 GOTO 6560
6550 FOR Fair=Xstep TO Xmax STEP Xstep
6560 GOSUB Calc0
6570 GOSUB Calc1
6580 GOSUB Calc_t
6590 GOSUB Calc2
6600 GOSUB Calc_air
6610 GOSUB Solve
6620 IF Tem_sol=1 THEN Y=Tmax-273
6630 IF Tem_sol=0 THEN Y=Pmin
6640 IF Temprt=1 THEN PRINTER IS 0
6650 IF Temprt=1 THEN GOSUB Temp_print
6660 IF Map=1 THEN GOSUB Plot
6670 IF Ans$="BACK_UP" THEN 6450
6680 Ans=Itt=Map=0
6690 GRAPHICS
6700 PEN 1
6710 MOVE Fair,Y
6720 LORG 5
6730 LABEL USING "K";"*"
6740 PEN 0
6750 NEXT Fair
6760 EXIT GRAPHICS
6770 DUMP GRAPHICS
6780 PRINTER IS 0
6790 PRINT LIN(2)
6800 PRINTER IS 16
6810 GOSUB Units
6820 GOTO What_now                                                    ! END OF SENSI
6830 !
6840 Change:! THIS SECTION LOADS BOARDS TO ALLOW CHANGES TO THE CIRCUIT DESCRIPT
6850 Map=1
6860 PRINT PAGE
6870 DISP "WORKING LOADING BOARDS"
6880 LOAD "BOARDS",1
6890 Get_new:! THIS SECTION EXPLAINS THE TWO WAYS TO GET A NEW BOARD DESCRIPTION
6900 S$="INPUT OF NEW BOARD DESCRIPTION"
6910 GOSUB Pagehead
6920 PRINT "    The new board description may be read in from mass storage in tw
o different"
```

```
6930 PRINT "programs.  THERML (the program in core now) will not allow visual
checking or"
6940 PRINT "modification of descriptive data for the circuit board.  The data is
 read in"
6950 PRINT "at your direction but only questions concerning the environment exte
rior to the"
6960 PRINT "circuit board are asked.  The second method of input from mass stora
ge involes"
6970 PRINT "the program BOARDS which allows both data checking through graphic
s and "
6980 PRINT "opportunities to modify the descriptive data."
6990 PRINT
7000 PRINT LIN(1),TAB(5),"1.  READ A NEW BOARD DESCRIPTION USING THERML. (no c
orrections)"
7010 PRINT LIN(1),TAB(5),"2.  READ A NEW BOARD DESCRIPTION USING BOARDS. (allo
ws corrections)"
7020 PRINT LIN(2)," REMEMBER THE THERMELEX SYSTEM MUST BE IN THE DEFAULT MASS ST
ORAGE DEVICE"
7030 Ans$="1"
7040 INPUT "YOUR CHOICE FROM ABOVE (1,2)?",Ans$
7050 IF Ans$="BACK_UP" THEN What_now
7060 Ans=VAL(Ans$)
7070 IF (Ans>0) AND (Ans<3) THEN 7100
7080 GOSUB Errin
7090 GOTO Get_new
7100 IF Ans=2 THEN 7130
7110 Map=1
7120 RETURN
7130 !
7140 Map=2
7150 DISP "WORKING LOADING BOARDS"
7160 LOAD "BOARDS",1
7170 !
7180 Key_new:! THIS SECTION LOADS BOARDS WITH THE INTENT TO INPUT NEW BOARD DESC
7190 Map=3
7200 DISP "WORKING LOADING BOARDS"
7210 LOAD "BOARDS",1
7220 !
7230 Terminate: ! THIS SECTION TERMINATES THE SESSION
7240 GCLEAR
7250 DISP "WORKING LOADING STANDARD KEY DEFFINITIONS"
7260 LOAD KEY "STDKEY"
7270 PRINT LIN(20),SPA(15),"NORMAL TERMINATION"
7280 PRINT LIN(2),SPA(15),"    THANK YOU     "
7290 DISP
7300 END                                                        !END OF TERMINATE
7310 !
7320 Pagehead:! THIS ROUTINE PLACES THE PAGE HEADINGS FOR THE INSTRUCTIONS
7330 PRINT PAGE,TAB(34-LEN(S$)/2),"** ";CHR$(132);S$;CHR$(133);" **",LIN(2)
7340 RETURN
7350 !
7360 Errin:! THIS SECTION ALERTS THE USER TO AN ATTEMPT TO INPUT BAD DATA
7370 BEEP
7380 DISP "****** INPUT OUT OF RANGE.............TRY AGAIN"
7390 WAIT 1500
7400 BEEP
7410 RETURN                                                     ! END OF ERRIN
7420 !
```

```
7430 Error:! THIS SECTION IS THE ERROR TRAPPING ROUTINE FOR THE ENTIRE PROGRAM
7440       ! PROGRAM FLOW RESUMES AT THE TOP OF THE SECTION IN WHICH THE ERROR
7450       ! OCCURED AFTER THE USER PRESSES CONT
7460 EXIT GRAPHICS
7470 PRINTER IS 16
7480 PRINT PAGE
7490 BEEP
7500 WAIT 300
7510 BEEP
7520 IF ERRN=56 THEN Err_name
7530 PRINT LIN(20),SPA(10),"ERROR NUMBER";ERRN;"HAS OCURRED IN LINE";ERRL;".  PR
ESS CONT WHEN READY"
7540 DISP
7550 BEEP
7560 PAUSE
7570 RETURN
7580 !
7590 Err_name:! THIS SECTION FOR IMPROPER FILE NAME
7600 PRINTER IS 16
7610 PRINT PAGE
7620 Msus$="DEFAULT MASS STORAGE"
7630 FOR I=2 TO LEN(Name$)
7640 IF Name$[I,I]=":" THEN 7670
7650 NEXT I
7660 GOTO 7700
7670 Msus$=Name$[I]
7680 CAT Msus$
7690 GOTO 7710
7700 CAT
7710 PRINT LIN(2),"File Name ";CHR$(132);Name$[1,I-1];CHR$(128);" is NOT on ";CH
R$(132);Msus$;CHR$(128);" with that spelling........."
7720 PRINT LIN(1),"CHECK OVER THE DIRECTORY ABOVE FOR CORRECT NAME OR SPELLING..
."
7730 DISP "PRESS CONT WHEN READY"
7740 PAUSE
7750 RETURN                                                          ! END OF ERROR
7760 Plote:GOSUB Error
7770 Plot: ! PLOTTING ROUTINE FOR THE AXES
7780 ON ERROR GOTO Plote
7790 PLOTTER IS "GRAPHICS"
7800 IF Tem_sol=0 THEN 7880
7810 Ystep=10
7820 FOR I=0 TO 7
7830 IF Tmax-273>50+I*25 THEN Ystep=15+I*5
7840 NEXT I
7850 Pltlbl$="Tjunc vs Air Flow"
7860 Ylbl$="Junc Temp (deg C)"
7870 GOTO 7940
7880 Ystep=.1
7890 FOR I=1 TO 10
7900 IF Pmin>.5+I THEN Ystep=.1*(I+1)
7910 NEXT I
7920 Pltlbl$="Pmin vs Air Flow"
7930 Ylbl$="Min Power Comp (Watts)"
7940 Ymax=5*Ystep
7950 GRAPHICS
7960 LOCATE 15,120,10,95
7970 SCALE Xmin,Xma ,Ymin,Ymax
```

```
7980 AXES Xstep,Ystep,Xmin,Ymin
7990 CSIZE 3
8000 LDIR 0
8010 LORG 6
8020 FOR Xpos=Xmin TO Xmax STEP Xstep
8030 MOVE Xpos,Ymin-.1*Ystep
8040 LABEL USING "K";Xpos*Mult
8050 NEXT Xpos
8060 MOVE 2.5*Xstep,-.4*Ystep
8070 LABEL USING "K";"Air-Flow/Board ("&VAL$(1/Mult)&" M^3/Sec)"
8080 LORG 8
8090 FOR Ypos=Ymin TO Ymax STEP Ystep
8100 MOVE Xmin-.1*Xstep,Ypos
8110 LABEL USING "K";Ypos
8120 NEXT Ypos
8130 LINE TYPE 1
8140 LORG 4
8150 LDIR PI/2
8160 MOVE -.4*Xstep,2.5*Ystep
8170 LABEL USING "K";Ylbl$
8180 MOVE Xmin+2.5*Xstep,5.1*Ystep
8190 CSIZE 4
8200 LDIR 0
8210 LABEL USING "K";Pictlbl$
8220 LABEL USING "K";Pltlbl$
8230 RETURN                                                    ! END OF PLOT
8240 !
8250 Bomb:! THIS SECTION DELIVERS MESSAGE TO THE USER OF FAILURE TO CONVERGE
8260 WAIT 2000
8270 BEEP
8280 PRINT PAGE,LIN(10),"UNABLE TO ACHIEVE CONVERGENCE DUE TO NUMERICAL INSTABIL
ITIES"
8290 PRINT LIN(3),"I SUGGEST A CHANGE IN EITHER THE INSTALLATION PARAMETERS OR
8300 PRINT LIN(1),"THE CIRCUIT BOARD PARAMETERS ...."
8310 PRINT LIN(2),"THERMELEX PREDICTS TEMPERATURES MUCH MUCH BETTER THAN POWER L
EVELS"
8320 PRINT LIN(1),"TRY SPECIFYING THE COMPONENT POWER LEVELS.",LIN(3)
8330 DISP "Press CONT when ready to return to option list"
8340 BEEP
8350 PAUSE
8360 DISP
8370 Bomb=1
8380 RETURN                                                    ! END OF BOMB
```

BIBLIOGRAPHY

1. Minchom, N. P., "Cooling of Electronic Equipment Must Be Considered at the Early Design Stage," Design Engineering, Vol. 20, No. 7 , November 1975.

2. Bellamy, M., "Latest Techniques in Circuit Heat Dissipation," New Electronics (Great Britain), Vol. 19, No. 15, July 1977.

3. Nevala, D. J., "A Guide to Good Air Cooling," Electronic Design 4, Vol. 5, No. 4 , February 15, 1974.

4. Taylor, G., "Air Cooling Considerations in Assembling Electronics Equipment," Circuits Manufacturing, Vol. 16, No. 7, July 1976.

5. Kaneoya, R., and Ogiso, K., "A Study on Electronic Equipment Cooling System Design," Review of the Electrical Communication Laboratory, Vol. 18, No. 142, Jan-Feb 1970.

6. Scott, A. W., "Cool It," Electronics Products, Vol. 19, No. 7, December 1976.

7. Carbonell, N. P., and Nevala, D. J., "Forced Air Cooling," Electronic Products, April 1979.

8. Bergles, A. E., Chu, R. C., and Seely, J. H., "Survey of Heat Transfer Techniques Applied to Electronic Equipment," ASME Paper No. 72-WA/HT-39, presented at the ASME Winter Annual Meeting, New York, NY, November 26-30, 1972.

9. Hannemann, R., "Elec-ronic System Thermal Design for Reliability," IEEE Transactions on Reliability, Vol. R-26, No. 5, December 1977.

10. Finch, D. J., "Forced Air Cooling of Dual-in-Line Packages," Marconi Review, London, Vol. 36, No. 187, 4th Quarter, 1972.

11. Ellison, G., "Ventbox - A Computerized Thermal Analysis Program," Tektronix, Inc., 1978.

12. Lannan, R. B., and Nash, L. E., "Standard Electronic Modules Exploratory Development Program, Improved SEM Thermal Analysis," FY-77 Final Report, Naval Weapons Support Center Report, Crane, Indiana, November 1977.

13. Wenthen, F. T., "Thermal Analysis of Improved Standard Electronics Modules," Final Report of Contract N00164-78-C-D192, General Electric Electronics Laboratory, Syracuse, NY, May 1979.

14. Kelleher, M. D., "A Method to Predict the Thermal Performance of Printed Circuit Board Mounted Solid State Devices," Naval Postgraduate School Report No. NPS-59KK75071, July 1975.

15. Mayer, A. H., "Computer Aided Thermal Design of Avionics for Optimum Reliability and Life Cycle Cost," Air Force Flight Dynamics Laboratory Report No. AFFDL-TR-78-48, March 1978.

16. Mayer, A. H., "Integrated Thermal Avionic Design Project Definition Report," Air Force Flight Dynamics Laboratory, Contrast No. F33615-79-C-3421, April 1979.

17. "Hewlett-Packard System 4S Desktop Computer, Operating and Programming Manual," Hewlett-Packard Calculator Products Division, Loveland, Colorado.

18. Holman, J. P., "Heat Transfer," 4th Edition, McGraw-Hill Book Company, New York, NY, 1976.

19. Kays, W. M., "Convective Heat and Mass Transfer," McGraw-Hill Book Company, New York, NY, 1966.

20. Knutsen, J. G., Katz, D. L., "Fluid Dynamics and Heat Transfer," McGraw-Hill Book Company, New York, NY, 1958.

21. Gerald, C. F., "Applied Numerical Analysis," 2nd Edition, Addison-Wesley Publishing Company, Reading, Massachusetts, 1978.

INITIAL DISTRIBUTION LIST

		No. Copies
1.	Defense Technical Information Center Cameron Station Alexandria, Virginia 22314	2
2.	Library, Code 0142 Naval Postgraduate School Monterey, California 93940	2
3.	Department Chairman, Code 69 Department of Mechanical Engineering Naval Postgraduate School Monterey, California 93940	1
4.	Associate Professor M. D. Kelleher, Code 69Kk Department of Mechanical Engineering Naval Postgraduate School Monterey, California 93940	2
5.	Professor P. Marto, Code 69Mx Department of Mechanical Engineering Naval Postgraduate School Monterey, California 93940	1
6.	LCDR R. A. Foltz 606 Tamarask Vallejo, California 94590	3
7.	Mr. Ron Lanin SEM Module Applications Branch Naval Weapons Support Center Crane, Indiana 47522	1
8.	Mr. Larry Nash SEM Module Applications Branch Naval Weapons Support Center Crane, Indiana 47522	1
9.	Mr. Clyde Ward Code 924 Naval Ocean Systems Center San Diego, California 92152	2

END

DATE
FILMED

81-2

DTIC