AD-A089 486 STANFORD UNIV CA DEPT OF OPERATIONS RESEARCH F/G 12/1
WHAT IS THE WORST CASE BEHAVIOR OF THE SIMPLEX ALGORITHM?(U)
MAY 80 N ZADEH N00014-75-C-0493
UNCLASSIFIED TR-37 NL

1 OF 1
AD A
089486

END
DATE
FILMED
10-80
DTIC

LEVEL II (12)

AD A089486

WHAT IS THE WORST CASE BEHAVIOR OF THE SIMPLEX ALGORITHM?

BY

NORMAN ZADEH

TECHNICAL REPORT NO. 37

MAY 1, 1980

PREPARED UNDER
OFFICE OF NAVAL RESEARCH CONTRACT
N00014-75-C-0493 (NR-042-264)

DTIC
ELECTE
SEP 25 1980
S D
A

DEPARTMENT OF OPERATIONS RESEARCH
STANFORD UNIVERSITY
STANFORD, CALIFORNIA

DISTRIBUTION STATEMENT A
Approved for public release;
Distribution Unlimited

DDC FILE COPY

80 9 25 014

WHAT IS THE WORST CASE BEHAVIOR OF THE SIMPLEX ALGORITHM?

by

Norman Zadeh

Technical Report No. 37

May 1980

Prepared Under
Office of Naval Research Contract N00014-75-C-0493*

Department of Operations Research
Stanford University
Stanford, California

*Also partially supported by National Science Foundation Grant ENG 76-12266.

Accession For
NTIS GRA&I
DDC TAB
Unannounced
Justification
By
Distribution/
Availability Codes
Dist | Avail and/or special
A

WHAT IS THE WORST CASE BEHAVIOR OF THE SIMPLEX METHOD?

ABSTRACT

The examples published by Klee and Minty in 1972 do not preclude the existence of a pivot rule which will make the simplex method, at worst, polynomial. In fact, the continuing success of Dantzig's method suggests that such a rule does exist.

A study of known examples shows that a) those which use "selective" pivot rules require exponentially large coefficients, and b) none of the examples' pivot rules are typically used in practice, either because of computational requirements or due to a lack of even-handed movement through the column set.

In all "bad" problems, certain improving columns are entered $\approx 2^{m-2}$ times before other improving columns are entered once. This is done by making the unused columns "appear" to yield small objective function improvement.

The purpose of this paper is to explain the Klee-Minty and Jeroslow constructions, show how they can be modified to be pathological with small integral coefficients, and then suggest a "least entered" pivot rule which forces an improving column to be entered before any other column is entered for the second time. This rule seems immune to the "deformed product construction" which is the essence of all known exponential counterexamples.

Introduction

The simplex method has been solving linear programs with m constraints in m to $3m$ pivots for over twenty years. In 1972, Klee and Minty demonstrated the existence of linear programs with m inequality constraints in m non-negative variables which require 2^m-1 pivots when any improving column may enter and when the standard "max c_j-z_j" rule is followed. Applying their construction for the standard rule leads to coefficients in excess of 3^m.

In 1973, Jeroslow published a modification of a second Klee and Minty construction. His modification is pathological for the "maximum increase" rule. An unrefined application of this construction also yields exponential coefficients.

Other examples involving large coefficients were subsequently published by Zadeh [1973] for minimum cost network flow problems, Avis-Chvatal [1977] for Bland's rule (first positive), Murty [1978] and Fathi [1978] for complementary pivot algorithms, and Goldfarb-Sit [1980] for a "gradient" selection rule. An example due to Edmonds for shortest path computations is also known [4].

The above examples may be viewed as "deformed product constructions." Given a polytope P^m requiring $\approx 2^m$ pivots with a polynomial number of dimensions, a new polytope P^{m+1} is constructed by deforming a product $P^m \times V$, where V is some polytope usually of low dimension. In the first Klee-Minty construction, P^{m+1} differed from P^m by one dimension and two facets (V has one dimension and two facets). In

the Klee-Minty-Jeroslow construction, P^{m+1} differed from P^m by two dimensions and roughly $4k$ facets, where k is some positive integer. In the network constructions [16], P^{m+1} differed from P^m by $2m$ dimensions and $2m+4$ facets.

We show that any linear program with rational coefficients may be expressed with coefficients 0, 1, -1, and 2. Modifications of the Klee-Minty and Jeroslow constructions are given with integral coefficients no greater than four. The Klee-Minty examples are shown to be equivalent to resource allocation problems with non-negative coefficients in which all bases have determinants of ± 1.

In all "bad" examples, the coefficients are chosen so that the best columns price out moderately, and are not entered until other columns have been entered exponentially many times. Roughly speaking, for a deformed product $P^{m+1} \approx P^m \times V^m$, this means that the simplex method performs a 2^m step pivot sequence for P^m before entering any of the new variables associated with V^m. The pivot sequence for P^m is then performed again in the reverse order.

Geometrically, the simplex method stays on a lower P^m face of $P^m \times V^m$ for $\approx 2^m$ pivots, then moves through the added V^m dimensions to an "upper" P^m face where it spends another 2^m pivots "undoing" pivots performed on the lower face.

Entering variables from V^m early causes a permanent move away from the lower face, killing the exponential growth.

The following rule forces movements away from faces irrespective of the level or rate of improvement. It was considered primarily for theoretical purposes after a thought provoking conversation with Arthur F. Veinott, Jr.

Least entered rule: Enter the improving variable which has been entered least often.

The above rule is easy to implement, and when used in conjunction with the standard or "max increase" rules speeds up both. It is unlikely to cycle (the cycle must contain all improving columns). It is our hope that the rule will prove to have a worst case bound proportional to $m \cdot n$, where m is the number of rows and n is the number of columns.* Examples of maximum flow problems requiring $\approx m \cdot n$ pivots using this rule will be given in a forthcoming paper.

Other rules similar to the "least entered" rule which have been suggested [4] are the Least Recently Considered (LRC) rule of Cunningham and the Least Recently Basic (LRB) rule of E.L. Johnson. Both methods were apparently designed for shortest path computations in networks but have obvious extensions to general linear programming which would kill the exponential growth of known counterexamples.

Unfortunately, polynomial proofs for the above rules, if they exist, might be extremely hard, as they would reduce the current best bound for the diameters of polytopes from $\frac{1}{3} \cdot 2^{d-2}(n - d + \frac{5}{2})$ to a polynomial in n and d, where n is the number of facets and d, the dimension.

---

*This is similar to the old conjecture $\Xi(d,n) \approx (d-1)(n-d) + 1$ of Klee [12] which was proven false by Klee and Minty for the standard rule.

The Klee-Minty Construction

The first Klee-Minty construction creates from an n-dimensional polytope P^n with 2n faces requiring 2^n-1 pivots when any improving column may enter a polytope P^{n+1} with two more faces requiring $2^{n+1}-1$ pivots.

The construction is illustrated in Figure 1. The path of vertices visited in P^n is denoted $p_0, p_1, \ldots, p_{2^n-1}$. The first polytope P^1 has two faces $(x_1 \geq 0,\ x_1 \leq 1)$ and requires one pivot. The second polytope P^2 is obtained from P^1 by adding two additional constraints $-x_1/3 + x_2 \geq 0$ and $x_1/3 + x_2 \leq 1$, involving one additional variable.

It is convenient to think of the pivot sequence for P^2 in terms of the slack variables associated with the various faces. The initial point $p_0 = (0,0)$ is determined by s_2, s_4 basic, s_1, s_3 non-basic. The sequence p_0, p_1, p_2, p_3 corresponds to entering s_1 then s_3, and then s_2. The variables s_2, s_4 and s_1 are respectively deleted.

P^3 is obtained from P^2 by adding two more constraints involving one additional variable. Note in Figure 1 that the pivot sequence for P^3 is essentially the pivot sequence for P^2, plus a movement from the lower face, followed by the sequence for P^2 in the reverse order. We express this pheomenon in general by writing $\vec{P}^{n+1} = \vec{P}^n,\ s_{2n+1},\ \overleftarrow{P}^n$. In terms of entering slack variables, $\vec{P}^3 = s_1 s_3 s_2 \quad s_5 \quad s_1 s_4 s_2$.

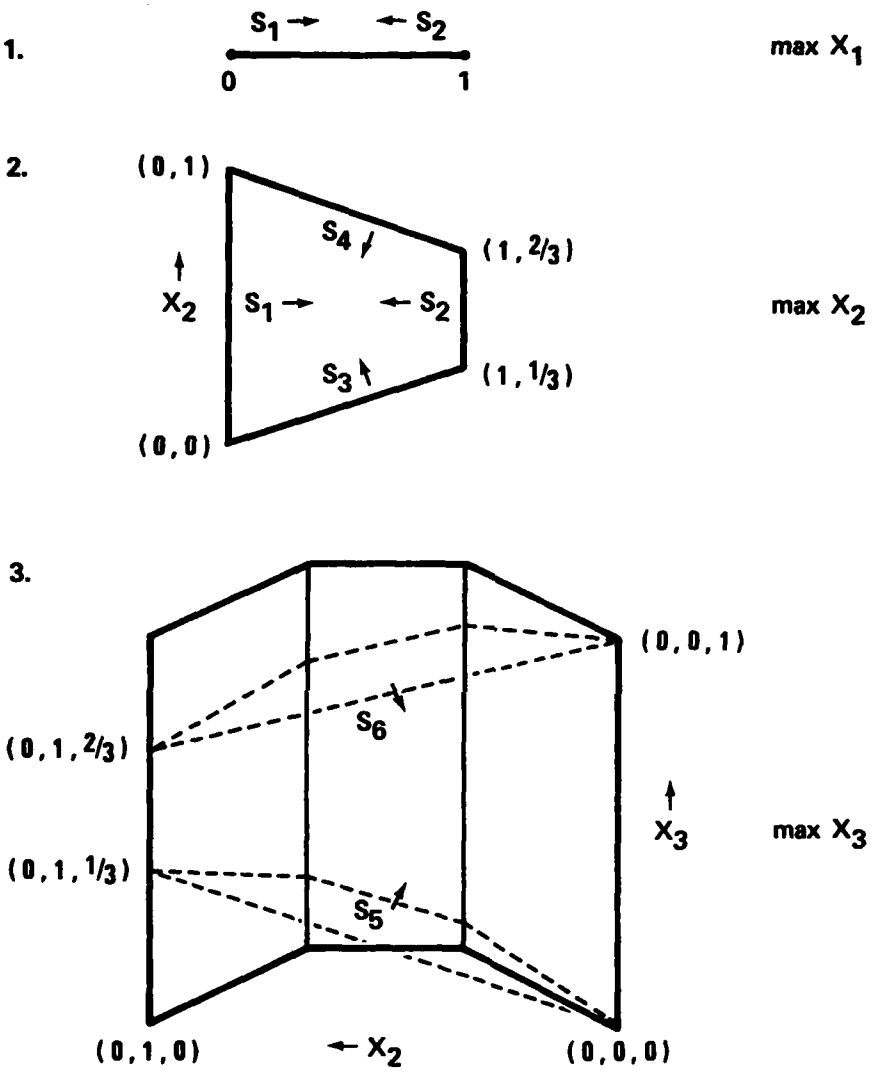

Pivot sequence:

No. 2	S_1	S_3	S_2									
No. 3	S_1	S_3	S_2	S_5	S_1	S_4	S_2					
No. 4	S_1	S_3	S_2	S_5	S_1	S_4	S_2	S_7	S_1 S_3 S_2	S_6	S_1	S_4 S_2

Figure 1: An example of the Klee-Minty construction

Fooling the Standard Rule

The examples in Figure 1 take one pivot to solve when the standard max $c_j - z_j$ rule is employed. To fool this rule, Klee and Minty scale the variables so that a much larger change in the entering slack variable is required to achieve the same objective function change, or equivalently, to move to the same adjacent vertex.

As an illustration, let $\bar{c}(s_i)$ denote the relative cost factor for s_i. If Δf_i denotes the change in the objective when s_i is entered, then $\bar{c}(s_i) = \Delta f_i / \Delta s_i$. At $p_0 = (0,0,0)$ in Figure 1, $\bar{c}(s_1) = 1/9$, $\bar{c}(s_2) = 1/3$, and $\bar{c}(s_5) = 1$. The standard rule would enter s_5, moving from $(0,0,0)$ to $(0,0,1)$, the optimum, in one pivot. However, if s_5 were replaced by $s_5/16$, it would take a 16 unit change in s_5 to move from $(0,0,0)$ to $(0,0,1)$ and $\bar{c}(s_5)$ would be $1/16$. A similar replacment of s_2 by $s_2/4$ would cause the standard rule to enter s_1 and follow the same sequence as before.

The right hand side of Table 1 gives a scaling which will make the standard rule exponential. Note that the coefficients grow at a rate of 4^m.

Examples with Small Integral Coefficients

The large coefficients in expressions like $s_8/64$, or more generally, $s_{2n}/4^{n-1}$, may be eliminated by adding $n-1$ additional variables and constraints. For the case $s_8/64$, we replace s_8 by s_8' with the additional constraints $4s_8' - s_8'' = 0$, $4s_8'' - s_8''' = 0$, $4s_8''' - s_8 = 0$, s_8', s_8'', $s_8''' \geq 0$, as done in Table 1. To construct P^m in this fashion using coefficients no greater than 4, $m(m-1)$ constraints and non-negative variables must be added.

It should be noted that such a "coefficient reduction" can always be performed, but the "reduction" is cleanest when the large coefficients in each column are multiples of a fixed power of two, for example,

$$\begin{pmatrix} 3\cdot 2^{74} \\ -1\cdot 2^{74} \\ 2\cdot 2^{74} \end{pmatrix} .$$

<u>Theorem 1</u>. Let L be a linear program with rational coefficients whose representation requires a polynomial number of digits. Then L may be expressed using integral coefficients of 2, 1, -1, and 0 with a polynomial number of variables and constraints.

Any improving column	Standard rule
max x_4	
$x_1 - s_1 = 0$	replace
$x_1 + s_2 = 1$	slacks by
$-x_1/3 + x_2 - s_3 = 0$	$- s_3/4$
$x_1/3 + x_2 + s_4 = 1$	$s_4/4$
$- x_2/3 + x_3 - s_5 = 0$	$- s_5/16$
$x_2/3 + x_3 + s_6 = 1$	$s_6/16$
$- x_3/3 + x_4 - s_7 = 0$	$- s_7/64$
$x_3/3 + x_4 + s_8 = 1$	$s_8/64$

Small Coefficients

Replace a quantity like $s_8/64$ by a variable s_8', along with the constraints

$$4s_8' - s_8'' = 0,\ 4s_8'' - s_8''' = 0,\ 4s_8''' - s_8 = 0,$$

all variables ≥ 0 .

Table 1: Example of the original Klee-Minty construction (upper left), a scaling of the slacks to fool the standard rule (upper right), and the addition of $m(m-1)$ variables and constraints to yield integral coefficients ≤ 4 (below).

Proof. The b_i may be made to be 0 or 1 by suitably multiplying each row. With this change, let d_j denote the least common multiple of the divisors of elements in column j. Then column j may be written as

$$\frac{x_j}{d_j} \cdot \begin{pmatrix} c_j \\ a_{1j} \\ \vdots \\ a_{mj} \end{pmatrix} ,$$

where $d_j, c_j, a_{1j}, \ldots, a_{mj}$ are integers. Let $\sum_k d_j^{(k)} 2^k$ denote the binary representation of d_j and let

$$q_j = \max_{i=1,\ldots,m} \{\lfloor \log_2 d_j \rfloor, \lfloor \log_2 a_{ij} \rfloor\} .$$

Note that $d_j^{(k)} = 0$ or 1 for every k, j. Define a new variable $\bar{x}_j = x_j/d_j$ by adding new variables $\bar{x}_j^{(k)}$, $k = 0, 1, 2, \ldots, q_j$, $(\bar{x}_j^{(k)} = 2^k \bar{x}_j)$ and constraints $(\sum_k d_j^{(k)} \bar{x}_j^{(k)}) - x_j = 0$ and $-\bar{x}_j^{(k)} + 2\bar{x}_j^{(k-1)} = 0$, $k = 1, \ldots, q_j$. Let $\sum_k a_{ij}^{(k)} 2^k$ be the binary representation of a_{ij}. Now the term $x_j a_{ij}/d_j$ may be expressed as $\sum_k a_{ij}^{(k)} \bar{x}_j^{(k)}$. All coefficients are $0, \pm 1$, or 2. The above construction requires $\sum_j (q_j+1)$ additional variables and constraints. ∎

When applying the simplex method to the above problems, care must be taken to ensure that initial pivots eliminate $\bar{x}_j^{(k)}$ variables and retain x_j. If x_j is eliminated and replaced by $\bar{x}_j^{(\ell)}$, a rescaling of variables has occurred which will change relative cost factors and may affect the pivot sequence.

The following theorem notes some similarities between the Klee-Minty construction and the "bad" complementary pivot example due to Murty, and explains how the Avis-Chvatal example was obtained.

<u>Theorem 2</u>. Let L^n denote the nth problem constructed on the left side of Table 1, with s_{2i}, respectively, s_{2i-1} replaced by $s_{2i}/3^{i-1}$, respectively, $s_{2i-1}/3^{i-1}$.

Then L^n is equivalent to a resource allocation problem with non-negative integral coefficients, equal objective coefficients, and basis matrices whose determinants are 1 or -1.

<u>Proof</u>. Solving the triangular system

$$
\begin{aligned}
x_1 \qquad\qquad\qquad\qquad - s_1 \qquad\qquad\qquad\qquad &= 0 \\
-\frac{x_1}{3} + x_2 \qquad\qquad\qquad\qquad - \frac{s_3}{3} \qquad\qquad &= 0 \\
-\frac{x_2}{3} + x_3 \qquad\qquad\qquad\qquad - \frac{s_5}{9} \qquad &= 0 \\
-\frac{x_3}{3} + x_4 \qquad\qquad\qquad\qquad - \frac{s_7}{27} &= 0 \\
\cdots\cdots\cdots\cdots
\end{aligned}
$$

for $x_1, \ldots, x_n$ yields

$$
\begin{aligned}
x_1 &= s_1 \\
x_2 &= \frac{s_1+s_3}{3} \\
x_3 &= \frac{s_1+s_3+s_5}{9} \\
x_4 &= \frac{s_1+s_3+s_5+s_7}{27} \\
&\cdots\cdots\cdots\cdots
\end{aligned}
$$

Substituting for x_1 in the remaining equations produces the equivalent problem

$$\text{maximize} \quad \frac{1}{3^{n-1}}(s_1 + s_3 + s_5 + s_7 + \cdots + s_{2n-1})$$

$$\begin{array}{lllllllll}
\text{subject to} & s_1 & & & + s_2 & & & & = 1 \\
& 2s_1 + s_3 & & & & + s_4 & & & = 3 \\
& 2s_1 + 2s_3 + s_5 & & & & & + s_6 & & = 9 \\
& 2s_1 + 2s_3 + 2s_5 + s_7 & & & & & & + s_8 & = 27 \\
& \vdots & & & & & & \ddots & \\
& 2s_1 + 2s_3 + 2s_5 + 2s_7 + \cdots + s_{2n-1} + & & & & & & + s_{2n} & = 3^{n-1}
\end{array}$$

$$s_i \geq 0 .$$

The constraint matrix is of the form $(L|I)$ where L is a lower triangular matrix with ones on the diagonal. This gives the result. ∎

The above problem can yield the same pivot sequence as the nth scaled problem in Table 1 because all relative cost factors will be 0 or $\pm 1/3^{n-1}$ at every vertex (there will be many ties). To <u>insure</u> that the same sequence is followed s_{2i}, respectively, s_{2i-1} must be replaced by

$$\frac{s_{2i}}{k^{i-1}}, \text{ respectively, } \frac{s_{2i-1}}{k^{i-1}} \qquad \text{with } k > 3 ,$$

in which case the constraint matrix would change but would remain lower triangular.

An example of Avis and Chvatal, which for $m = 3$ with a rearranging of indices is

$$\text{maximize} \quad 10^2 s_1 + 10 s_3 + s_5$$

$$\begin{aligned} \text{subject to} \quad & s_1 + s_2 = 10^2 \\ & 20 s_1 \quad s_3 + s_4 = 10^4 \\ & 200 s_1 + 20 s_3 + s_5 + s_6 = 10^6 \qquad s_i \geq 0 \end{aligned}$$

may be obtained from Table 1 by replacing the 3's by 10's and taking $k = 10^2$.

The following assertion notes that a bounded pathological example can always be transformed into one with all a_{ij}, b_i, and $c_j \geq 0$.

<u>Assertion 1.</u> Let L be a linear program with a finite optimal solution. Then L may be transformed to an equivalent program L' in which all coefficients are positive (non-negative).

<u>Proof</u>. Affix the constraint $\Sigma x_i + s_{m+1} = M$ for sufficiently large M. Then add suitable multiples of this constraint to each row until all coefficients are positive. The objective function will have a constant term involving $-M$ which may be disregarded. ∎

Bland's Rule (first improving column)

Table 2 lists the sequence of relative cost factors $\bar{c}(s_i)$ associated with the vertices $p_0, \ldots, p_7$ of P^3. Notice that the variables s_{2i} and s_{2i-1} are complementary, i.e., $s_{2i} \cdot s_{2i-1} = 0$ $\forall$ i, as are their relative cost factors $\bar{c}(s_{2i}) \cdot \bar{c}(s_{2i-1}) = 0$ $\forall$ i.

The following theorem notes that examples given in Table 1 are pathological for Bland's Rule. A similar statement can be made for the forthcoming Jeroslow modification, and for network examples in [16].

Theorem 3. The examples in Table 1 follow the same pivot sequence with Bland's rule.

Outline of proof. It suffices to show that the first improving column prices out best. Let ϕ denote the objective function. For every n, $\phi(p_0) = 0$, $\phi(p_{2^n-1}) = 1$, and the jump in ϕ between lower and upper faces is 1/3. Let $p_i^1 = (p_i, \phi(p_i)/3)$ and $p_i^2 = (p_i, 1 - \phi(p_i)/3)$ for $0 \leq i \leq 2^n-1$. Then the vertex sequence for P^{n+1} is

$$\underbrace{p_0^1, p_1^1, \ldots, p_{2^n-1}^1}_{\text{lower face}}, \underbrace{p_{2^n-1}^2, \ldots, p_1^2, p_0^2}_{\text{upper face}} .$$

For each increase in n, the objective change between successive points on lower (upper) faces decreases by a factor of three. Because

	s_1	s_2	s_3	s_4	s_5	s_6
0	$\frac{1}{9}$	0	$\frac{1}{12}$	0	$\frac{1}{16}$	0
1	0	$-\frac{1}{9}$	$\frac{1}{12}$	0	$\frac{1}{16}$	0
2	0	$\frac{1}{9}$	0	$-\frac{1}{12}$	$\frac{1}{16}$	0
3	$-\frac{1}{9}$	0	0	$-\frac{1}{12}$	$\frac{1}{16}$	0
4	$\frac{1}{9}$	0	0	$\frac{1}{12}$	0	$-\frac{1}{16}$
5	0	$-\frac{1}{9}$	0	$\frac{1}{12}$	0	$-\frac{1}{16}$
6	0	$\frac{1}{9}$	$-\frac{1}{12}$	0	0	$-\frac{1}{16}$
7	$-\frac{1}{9}$	0	$-\frac{1}{12}$	0	0	$-\frac{1}{16}$

Table 2: Relative cost factors associated with the vertices $p_0, p_1, \ldots, p_7$.

the vertices for P^{n+1} are obtained from the vertices for P^n by adding an extra dimension (the objective value), the change in the entering slack required to move from p_i to p_{i+1} on the lower (upper) face remains the same. This implies that relative cost factors for old slacks are decreased in absolute value by a factor of three for each increase in n. The new slack variables (with the highest indices) are scaled to price out worse than the other variables. This observation and its predecessor imply that the lowest indexed variables, when profitable, price out best. The exact formula, for $\bar{c}(s_{2i}) > 0$, is $\bar{c}(s_{2i}) = 4/3^n\ (3/4)^i$, which decreases by a factor of three for each increase in n. ∎

The Maximum Increase Rule

This rule enters the column yielding the maximum objective increase. A sequence of "bad" polytopes, $P^1, \ldots, P^n$, will be constructed recursively. P^1 is shown at the top of Figure 2. It has two dimensions, four faces, and requires two pivots starting from (0,0) when the objective is maximize x_1. The two "lower faces" are dotted for the purposes of identification.

The second polytope P^2, is four dimensional and appears below P^1. P^2 is a deformed product of P^1 with V^1, the two dimensional polytope shown in the upper right.

P^2 is best appreciated by imagining that one is looking down at the top of a mountain. The shaded edges of P^2 correspond to the upper faces of P^1 crossed with V^1. The dotted edges of P^2 correspond to the bottom faces of P^1 crossed with V^1 and are not all shown. P^1 corresponds to the two dimensional polytope determined by (0,0) and points a and b. Figure 2 is essentially an approximate projection of P^2 onto the V^1 coordinates, which are denoted x_3 and x_4.

P^2 was designed so that, starting at (0,0), and maximizing the x_3 or "x" coordinate, one first performs the pivot sequence for P^1; executes several pivots involving V^1 variables; "reverses" the sequence for P^1; and ends at (1,0).

In terms of entering slack variables, the forward pivot sequence p_0 to p_8 shown in Figure 2 may be expressed as

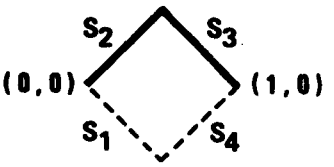

Initial polytope $\mathscr{P}^1$

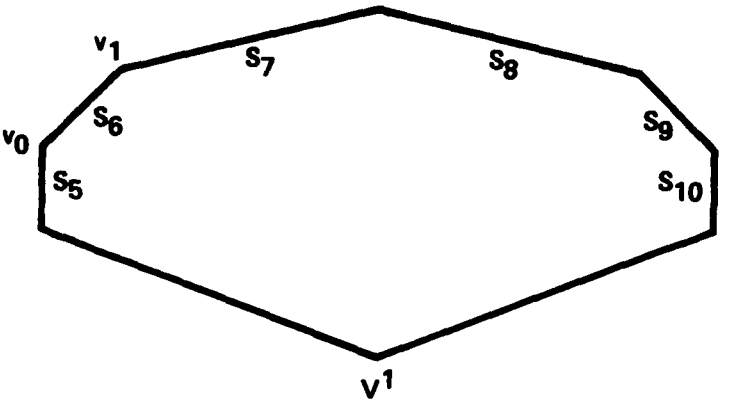

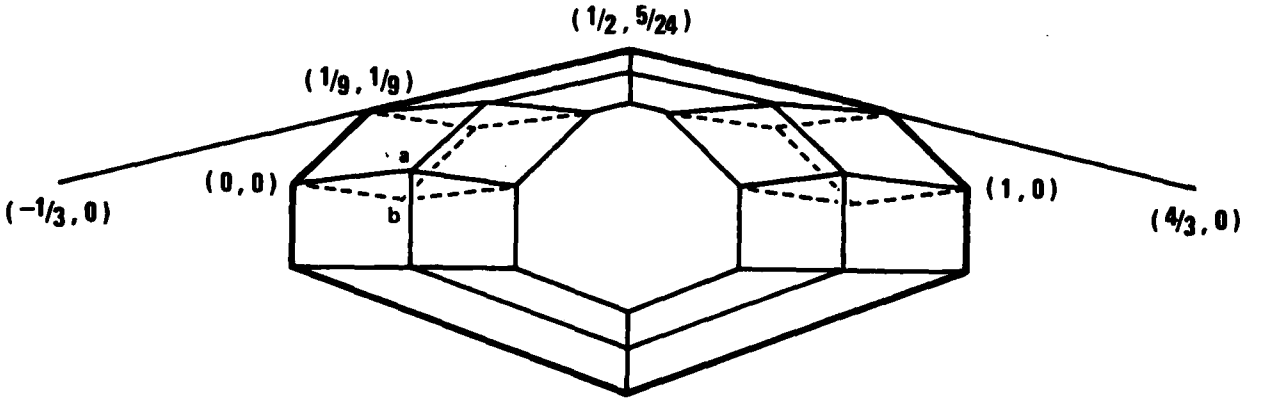

$\mathscr{P}^2 \approx \mathscr{P}^1 \times V^1$

Coordinates shown are x_3 and x_4, the coordinates of V^1.

Forward pivot sequence p_0 to p_8 max x_3, 8 pivots.

Reverse pivot sequence, p_8 to p_0, min x_3, 8 pivots.

Figure 2: A modification of the Klee-Minty-Jeroslow construction.

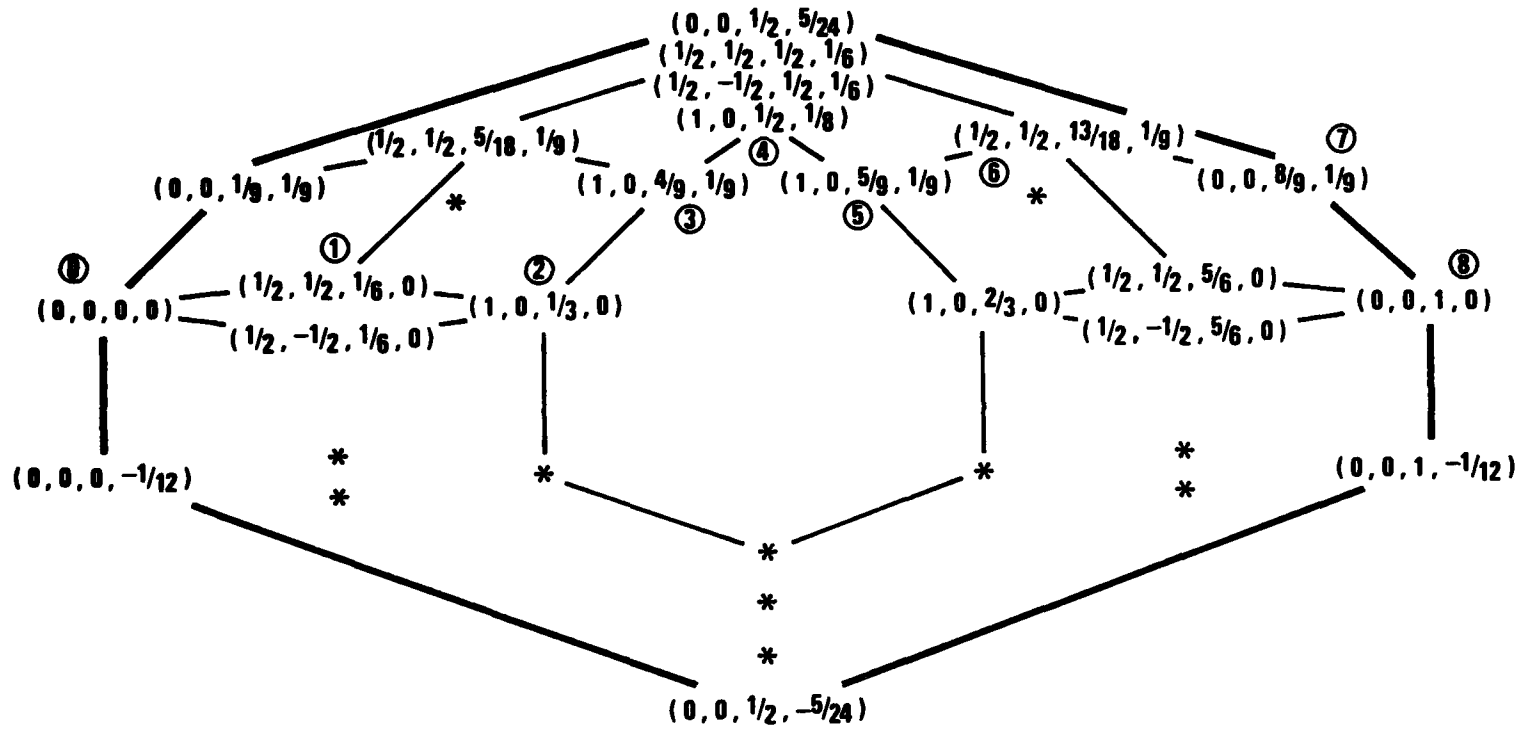

Figure 3: Relevant extreme points of P^2, the pathological four dimensional polytope for the "max increase" rule. Vertices not shown are starred. Pivot sequence when maximizing x_3 is represented by the vertices labelled 0 , 1 , 2 , 3 , 4 , 5 , 6 , 7 , 8 .

$s_1 s_2$	$s_5 s_6 s_7$	$s_3 s_4$	s_8
$\not{p}^1$	V^1	$\not{p}^1$	V^1

P^2 is a "reversible" polytope, in the sense that eight pivots are also required if one starts at (1,0) and minimizes x_3. The reverse pivot sequence from (1,0) to (0,0) is shown at the bottom of Figure 2.

To insure that the pivot sequence for P^1 is performed before variables in V^1 are entered, the difference in x coordinates between $v_0 = (0,0)$ and $v_1 = (1/9, 1/9)$ is chosen smaller than the difference in x coordinates between (0,0) and vertex a. This ensures that pivots involving variables of P^1 are performed first as long as such pivots are profitable.

Construction of P^3

P^3 is constructed as a deformed product of $P^2 \times V^2$. V^2 is the same as V^1 except that the slopes of the lines through $(-1/3, 0)$, $(1/2, 5/24)$ and $(1/2, 5/24)$, $(4/3, 0)$ are decreased in absolute value by a factor of 4. This effectively squashes the top half of P^3 so that the difference in x coordinates between v_0 and v_1 is $1/45$*. Variables of P^2 are now more "profitable" than variables of V^2, so the whole pivot sequence for P^2 is performed before variables of V^2 are entered.

Denoting the relevant slacks of V^2 corresponding to $s_5, s_6, s_7, s_8, s_9, s_{10}$ in V^1 by $s_{11}, s_{12}, s_{13}, s_{14}, s_{15}, s_{16}$, the forward pivot sequence for P^3 in terms of entering slacks is

$$\underbrace{s_1 s_2 \quad s_5 s_6 s_7 \quad s_3 s_4 \quad s_8}_{\overleftarrow{P}^2} \quad s_{11} s_{12} s_{13} \quad \underbrace{s_1 s_2 \quad s_{10} s_9 s_8 \quad s_3 s_4 \quad s_7}_{\overleftarrow{P}^2} \quad s_{14}$$

In general, P^n is constructed as a deformed product of P^{n-1} and V^{n-1}, where V^{n-1} is the same as V^1 except the lines through $(-1/3, 0)$, $(1/2, 5/24)$ and $(1/2, 5/24)$, $(4/3, 0)$ have their slopes decreased in absolute value by a factor of $1/4^{n-2}$.

---

*v_1 is determined by the intersection of lines $y = x$ and $y = x/16 + 1/48$.

Examples with Small Coefficients

Constraints with small integral coefficients defining P^1, P^2, and P^3 are shown in Table 3. The system for P^n is generated by taking the system for P^{n-1} and adding the constraints determining V^{n-1}, with x_{2n-1} replaced by $x_{2n-1} - (x_{2n-3}/3)$ for facets on the left of the line $x_{2n-1} = 1/2$ and x_{2n-1} replaced by $x_{2n-1} + (x_{2n-3}/3)$ for facets on the right of $x_{2n-1} = 1/2$. This yields the deformation, or tilting of the product. Note that, aside from a translation of subscripts, the set of constraints for V^2 differs from that for V^1 only in the first two inequalities, where a variable x_6'' (representing $16x_6$) has replaced a variable x_4' (representing $4x_4$). This corresponds to reducing the slope of the top two facets by a factor of four.

Testing the Problems

To run the problems it is recommended that the x variables be eliminated and replaced by slacks. The starting basis then consists of those slacks which are positive at the point $(0,0,0, \ldots, 0)$. For P^2 the starting basis would be s_3, s_4, s_7, s_8, s_9, s_{10}, and the slacks for the bottom two faces of V^1.

$$
\left.\begin{array}{ll}
\max & -x_1 + x_2 \le 0 \\
x_1 & x_1 + x_2 \le 1 \\
 & -x_1 - x_2 \le 0 \\
 & x_1 - x_2 \le 1
\end{array}\right\} \text{2 pivots}
$$

$$
\left.\begin{array}{lllll}
\max & x_1 & + 3x_3 & & + 3x_4' \le 4 \\
x_3 & x_1 & - 3x_3 & & + 3x_4' \le 1 \\
 & & & 4x_4 - & x_4' = 0 \\
 & x_1 & - 3x_3 + & 3x_4 & \le 0 \\
 & x_1 & + 3x_3 + & 3x_4 & \le 3 \\
 & x_1 & - 3x_3 & & \le 0 \\
 & x_1 & + 3x_3 & & \le 3 \\
 & x_1 & - 3x_3 & & - 3x_4' \le 1 \\
 & x_1 & + 3x_3 & & - 3x_4' \le 4
\end{array}\right\} 2\cdot 2+4 = 8 \text{ pivots}
$$

$$
\left.\begin{array}{lllllll}
\max & x_3 & + 3x_5 & & & 3x_6'' \le 4 \\
x_5 & x_3 & - 3x_5 & & & + 3x_6'' \le 1 \\
 & & & 4x_6 - & x_6' & = 0 \\
 & & & & 4x_6' - & x_6'' = 0 \\
 & x_3 & - 3x_5 + & 3x_6 & & \le 0 \\
 & x_3 & + 3x_5 + & 3x_6 & & \le 3 \\
 & x_3 & - 3x_5 & & & \le 0 \\
 & x_3 & + 3x_5 & & & \le 3 \\
 & x_3 & - 3x_5 & & - 3x_6' & \le 1 \\
 & x_3 & + 3x_5 & & - 3x_6' & \le 4
\end{array}\right] \text{20 pivots}
$$

$$
\begin{array}{lll}
\max & x_5 & + 3x_7 + 3x_7''' \le 4 \\
x_7 & x_5 & - 3x_7 + 3x_7''' \le 1 \\
 & \cdots\cdots\cdots\cdots & \cdots\cdots\cdots\cdots
\end{array}
$$

Table 3 $x_4, x_4', x_6, x_6', x_6'', x_8, x_8', x_8'', x_8'''$ unrestricted

Acknowledgement

The author would like to thank George B. Dantzig for numerous enlightening conversations and Arthur F. Veinott, Jr. for suggesting a study of alternative pivot rules which ultimately led to the "least entered" rule.

References

[1] D. Avis and V. Chvátal, "Notes on Bland's pivoting rule", *Mathematical Programming Study 8* (1978) 24-34.

[2] R.G. Bland, "New finite pivoting rules for the simplex method", *Mathematics of Operations Research* 2 (1977) 103-107.

[3] R.W. Cottle, "Observations on a class of nasty linear complementarity problems", *Discrete Applied Mathematics* 2 (1980)

[4] W.H. Cunningham, "Theoretical properties of the network simplex method", *Mathematics of Operations Research* 2 (1979) 196-208.

[5] G.B. Dantzig, *Linear programming and extensions* (Princeton University Press, Princeton, New Jersey, 1963).

[6] Y. Fathi, "Computational complexity of linear complementarity problems associated with positive definite symmetric matrices", Department of Industrial and Operations Engineering, University of Michigan (Ann Arbor, Michigan, 1978).

[7] D. Goldfarb and W. Sit, "Worst case behavior of the steepest edge simplex method", *Discrete Applied Mathematics* 1 (1979) 277-285.

[8] B. Grünbaum, *Convex polytopes* (Interscience, New York, New York, 1967).

[9] R. Jeroslow, "The simplex algorithm with the pivot rule of maximizing criterion improvement", *Discrete Mathematics 4* (1973) 367-377.

[10] V. Klee and G.J. Minty, "How good is the simplex algorithm?", *Inequalities--III* (Academic Press, New York, New York, 1972).

[11] V. Klee and D.W. Walkup, "The d-step conjecture for polyhedra of dimension $d < 6$", *Acta Mathematics* 117 (1967) 53-78.

[12] V. Klee, "A class of linear programs requiring a large number of iterations", *Numerical Mathematics* 7 (1965) 313-321.

[13] T.M. Liebling, "On the number of iterations of the simplex method", *Methods of Operations Research XVII* (1972) 248-264.

[14] K.G. Murty, "Computational complexity of complementary pivot methods", *Mathematical Programming Study 7* (1978) 61-73.

[15] W.P. Niedringhaus and K. Steiglitz, "Some experiments with the pathological linear programs of N. Zadeh", *Mathematical Programming 15*(3) (1978) 352-354.

[16] N. Zadeh, " A bad network problem for the simplex method and other minimum cost flow algorithms", *Mathematical Programming 5* (1973) 255-266.

UNCLASSIFIED

SECURITY CLASSIFICATION OF THIS PAGE (When Data Entered)

REPORT DOCUMENTATION PAGE		READ INSTRUCTIONS BEFORE COMPLETING FORM
1. REPORT NUMBER 37	2. GOVT ACCESSION NO. AD-A089 486	3. RECIPIENT'S CATALOG NUMBER
4. TITLE (and Subtitle) WHAT IS THE WORST CASE BEHAVIOR OF THE SIMPLEX ALGORITHM?		5. TYPE OF REPORT & PERIOD COVERED TECHNICAL REPORT 6. PERFORMING ORG. REPORT NUMBER
7. AUTHOR(s) Norman Zadeh		8. CONTRACT OR GRANT NUMBER(s) N00014-75-C-0493
9. PERFORMING ORGANIZATION NAME AND ADDRESS DEPARTMENT OF OPERATIONS RESEARCH STANFORD UNIVERSITY STANFORD, CALIFORNIA 94305		10. PROGRAM ELEMENT, PROJECT, TASK AREA & WORK UNIT NUMBERS NR-042-264
11. CONTROLLING OFFICE NAME AND ADDRESS LOGISTICS AND MATHEMATICAL STATISTICS BRANCH OFFICE OF NAVAL RESEARCH ARLINGTON, VIRGINIA		12. REPORT DATE May 1, 1980 13. NUMBER OF PAGES 26
14. MONITORING AGENCY NAME & ADDRESS(if different from Controlling Office)		15. SECURITY CLASS. (of this report) UNCLASSIFIED 15a. DECLASSIFICATION/DOWNGRADING SCHEDULE

16. DISTRIBUTION STATEMENT (of this Report)

This document has been approved for public release and sale.
Its distribution is unlimited.

17. DISTRIBUTION STATEMENT (of the abstract entered in Block 20, if different from Report)

18. SUPPLEMENTARY NOTES

Also partially supported by National Science Foundation Grant ENG76-12266.

19. KEY WORDS (Continue on reverse side if necessary and identify by block number)

Simplex method, pathological, pivot, polytope, diameter

20. ABSTRACT (Continue on reverse side if necessary and identify by block number)

The examples published by Klee and Minty in 1972 do not preclude the existence of a pivot rule which will make the simplex method, at worst, polynomial. In fact, the continuing success of Dantzig's method suggests that such a rule does exist.

A study of known examples shows that a) those which use "selective" pivot rules require exponentially large coefficients, and b) none of the

DD FORM 1 JAN 73 1473 EDITION OF 1 NOV 65 IS OBSOLETE
S/N 0102-014-6601

UNCLASSIFIED

SECURITY CLASSIFICATION OF THIS PAGE (When Data Entered)

20. Abstract (continued)

examples' pivot rules are typically used in practice, either because of computational requirements or due to a lack of even-handed movement through the column set.

In all "bad" problems, certain improving column are entered about 2^{m-2} times before other improving columns are entered once. This is done by making the unused columns "appear" to yield small objective function improvement.

The purpose of this paper is to explain the Klee-Minty and Jeroslow constructions, show how they can be modified to be pathological with small integral coefficients, and then suggest a "least entered" pivot rule which forces an improving column to be entered before any other column is entered for the second time. This rule seems immune to the "deformed product construction" which is the essence of all known exponential counterexamples.