(12) LEVEL II

AD-E300 875

DNA 4821F

AD A088363

THEATER NUCLEAR FORCE SURVIVABILITY AND SECURITY

Measures of Effectiveness

The BDM Corporation
7915 Jones Branch Drive
McLean, Virginia 22102

31 January 1979

Final Report for Period 1 May 1978—1 November 1978

CONTRACT No. DNA 001-78-C-0290

APPROVED FOR PUBLIC RELEASE;
DISTRIBUTION UNLIMITED.

THIS WORK SPONSORED BY THE DEFENSE NUCLEAR AGENCY
UNDER RDT&E RMSS CODE B390078465 A99QAXFD40101 H2590D.

Prepared for
Director
DEFENSE NUCLEAR AGENCY
Washington, D. C. 20305

DTIC
ELECTE
AUG 27 1980
S D
B

DDC FILE COPY

80 8 12 014

Destroy this report when it is no longer needed. Do not return to sender.

PLEASE NOTIFY THE DEFENSE NUCLEAR AGENCY, ATTN: STTI, WASHINGTON, D.C. 20305, IF YOUR ADDRESS IS INCORRECT, IF YOU WISH TO BE DELETED FROM THE DISTRIBUTION LIST, OR IF THE ADDRESSEE IS NO LONGER EMPLOYED BY YOUR ORGANIZATION.

DNA PRINTING PLANT

(18) DNA, SBIE

UNCLASSIFIED

SECURITY CLASSIFICATION OF THIS PAGE (When Data Entered)

(19) **REPORT DOCUMENTATION PAGE**

READ INSTRUCTIONS BEFORE COMPLETING FORM

1. REPORT NUMBER: DNA 4821F, AD-E300 875

2. GOVT ACCESSION NO.: A088 363

3. RECIPIENT'S CATALOG NUMBER:

4. TITLE (and Subtitle): (6) THEATER NUCLEAR FORCE SURVIVABILITY AND SECURITY. Measures of Effectiveness.

5. TYPE OF REPORT & PERIOD COVERED: (9) Final Report ~~for Period~~ 1 May 78 – 1 Nov 78

6. PERFORMING ORG. REPORT NUMBER: (14) BDM/W-78-664-TR

7. AUTHOR(s): (10) L. B. Lennon, C. H. Hanks, W. T. Cooper

8. CONTRACT OR GRANT NUMBER(s): (15) DNA 001-78-C-0290 New

9. PERFORMING ORGANIZATION NAME AND ADDRESS: The BDM Corporation, 7915 Jones Branch Drive, McLean, Virginia 22102

10. PROGRAM ELEMENT, PROJECT, TASK AREA & WORK UNIT NUMBERS: (16) Subtask A99QAXFD401-01

11. CONTROLLING OFFICE NAME AND ADDRESS: Director, Defense Nuclear Agency, Washington, D.C. 20305

12. REPORT DATE: (11) 31 January 1979

13. NUMBER OF PAGES: 122 (17) D401

14. MONITORING AGENCY NAME & ADDRESS (If different from Controlling Office): (12) 125

15. SECURITY CLASS (of this report): UNCLASSIFIED

15a. DECLASSIFICATION/DOWNGRADING SCHEDULE

16. DISTRIBUTION STATEMENT (of this Report)

Approved for public release; distribution unlimited.

17. DISTRIBUTION STATEMENT (of the abstract entered in Block 20, if different from Report)

18. SUPPLEMENTARY NOTES

This work sponsored by the Defense Nuclear Agency under RDT&E RMSS Code B390078465 A99QAXFD40101 H2590D.

19. KEY WORDS (Continue on reverse side if necessary and identify by block number)

Measures of Effectiveness	Unit Effectiveness
Survivability	Force Effectiveness
Security	Probability
Availability	Analytical Assessment

20. ABSTRACT (Continue on reverse side if necessary and identify by block number)

This report describes the first phase of development of analytical assessment tools in support of the Department of Defense Theater Nuclear Forces Survivability and Security Program. An overall framework within which measures of effectiveness for theater nuclear force survivability and security can be used to judge the value of technological, operational, and procedural improvements is described.

DD FORM 1 JAN 73 1473 EDITION OF 1 NOV 65 IS OBSOLETE

UNCLASSIFIED

SECURITY CLASSIFICATION OF THIS PAGE (When Data Entered)

391962

TABLE OF CONTENTS

Section			Page
1.	EXECUTIVE SUMMARY		7
	1-1	Purpose	7
	1-2	Basis of Framework	7
	1-3	Survivability	8
	1-4	Availability	8
	1-5	Unit Effectiveness	9
	1-6	Force Effectiveness	9
	1-7	Security	9
	1-8	Methodology	10
	1-9	Sensitivity Analyses	10
	1-10	Utility	11
	1-11	Conclusions	11
	1-12	Data	12
2.	INTRODUCTION		13
	2-1	Purpose	13
	2-2	Scope	13
	2-3	Background	14
3.	ISSUES, FACTORS, AND MEASURES OF EFFECTIVENESS		18
	3-1	Definition of a Measure of Effectiveness (MOE)	18
	3-2	Levels of MOE	18
	3-3	Development of Measures of Effectiveness	19

TABLE OF CONTENTS (CONTINUED)

Section			Page
	3-4	Security Factors, Issues, and MOE	20
	3-5	Survivability Factors, Issues, and MOE	23
	3-6	Availability Factors, Issues, and MOE	27
	3-7	Unit Effectiveness Factors, Issues, and MOE	31
4.	METHODOLOGY		35
	4-1	Introduction	35
	4-2	Probabilities and Inferences	36
	4-3	Physical Security	41
	4-4	Unit Survivability	43
	4-5	Unit Availability	43
	4-6	Unit Effectiveness	46
	4-7	Utility	46
	4-8	Total Force Effectiveness	48
	4-9	Application	50
5.	SENSITIVITY ANALYSES		51
	5-1	Introduction	51
	5-2	Security	52
	5-3	Survivability	65
	5-4	Availability	76
	5-5	Unit Effectiveness	80

TABLE OF CONTENTS (CONTINUED)

Section		Page
6.	RELATIVE CONTRIBUTIONS	86
6-1	Relative Contributions of the TNF Systems	86
6-2	Sensitivity Analysis	94
7.	CONCLUSIONS	97
7-1	General Conclusions	97
7-2	Specific Indications	98
7-3	Further Development	99
Appendix		
A.	Data Base	103
B.	USEUCOM Issues and MOE	109
C.	Glossary	111

ACCESSION for
NTIS White Section ☑
DDC Buff Section ☐
UNANNOUNCED ☐
JUSTIFICATION
BY
DISTRIBUTION/AVAILABILITY CODES
Dist. AVAIL. and/or SPECIAL
A

LIST OF ILLUSTRATIONS

Figure		Page
4-1	MOE scenario logic	37
4-2	Decision logic	41
4-3	Security relationships	42
4-4	Survivability relationships	44
4-5	Availability relationships	45
4-6	Unit effectiveness relationships	47
4-7	Force effectiveness logic	49
5-1	Relative contributions to P_{SEC}	56
5-2	P_{SEC}	58
5-3	Ratio of contributions	59
5-4	Sensitivity of P_{SUR} to P_n, P_{cd}, P_{ncd}	71
5-5	Sensitivity of P_{SUR} to $P_d P_i P_t P_h$, P_{cd}, P_{ncd}	72
5-6	P_{SUR} as a function of $P_d P_i P_t P_h$, P_{cd}, P_{ncd}	73
5-7	Probability of availability	78
6-1	Relative contributions (kt/2hr)	91
6-2	Relative contributions (target attack rate)	92
6-3	Relative contributions (lethal area)	93

LIST OF TABLES

Table		Page
5-1	Security calculations	54
5-2	Survivability calculations	66
5-3	Unit effectiveness	81
6-1	Relative contributions (kt/2hr and target attack rate)	87
6-2	Relative contributions (lethal area)	90
6-3	Relative ranks	95

SECTION 1
EXECUTIVE SUMMARY

1-1 PURPOSE.

The purpose of this report is to describe an overall framework within which measures of effectiveness for theater nuclear force survivability and security can be used to judge the value of technological, operational, and procedural improvements to force elements. This report describes the first phase of development of analytical assessment tools in support of the DOD Theater Nuclear Force Survivability and Security Program, whose major objective is to determine how best to maximize TNF effectiveness in context of survivability and security while minimizing cost.

1-2 BASIS OF FRAMEWORK.

The framework described herein is based on the factors affecting survivability, security, availability, and unit effectiveness arranged in logical relationships as derived from force operational concepts in peace, transition, and war. The data base used is exemplified in Appendix A.

The TNF S^2 issues developed in conjunction with USEUCOM were broken down to the basic questions that must be answered to address the issues (Appendix B). These basic questions were integrated into the factors affecting survivability, security, availability, and unit effectiveness to produce measures of effectiveness (MOE) at four levels of detail: Force, Functional, Systemic, and Process MOE defined in paragraph 3-2. The MOE are combined to describe the probability that a sequence of events in a scenario will occur, and are designed to accommodate all TNF weapon systems in both conventional and nuclear scenarios. The framework expresses

PRECEDING PAGE BLANK-NOT FILMED

overall force effectiveness in terms of the factors of survivability, availability, and unit effectiveness in a manner that permits evaluation of changes in overall force effectiveness caused by changes in one or more of the factors.

1-3 SURVIVABILITY.

Survivability is closely related to security. Both begin with detectibility and identifiability questions. Survivability then proceeds to the likelihood of being targeted, hit, and neutralized. Unit activity leads to detection and identification by the enemy. As identification is perfected firepower will be assigned to the target. The probability of a target hit depends upon the accuracy and timeliness of target location and weapon delivery. The perfect doctrine (from a survivability point of view) for TNF elements would call for units to remain in a position for a time shorter than that required to detect, identify, and target them.

The probability of neutralization depends on target element response to the effects of munitions used against it. Target element disposition and hardness and munition type are the major factors. Units may experience damage from direct attack or, in a collateral sense, by being near another unit which is attacked.

1-4 AVAILABILITY.

A combat unit may be perfectly survivable and still contribute nothing to total force effectiveness if it is unavailable when called on to perform its mission. The factors affecting availability include movement between fighting positions, ability to communicate, ammunition supply, suppressive fires, and unscheduled maintenance. The maintenance factor applies to units damaged or neutralized in combat.

1-5 UNIT EFFECTIVENESS.

Effectiveness is the complement of survivability and uses similar terms. Detection, identification, and assignment of targets is usually done outside and beyond the control of munitions delivery units. Within the delivery unit timeliness and accuracy are key. Munitions effects are determined by the available stockpile.

1-6 FORCE EFFECTIVENESS.

When connected properly, the foregoing factors can be used to describe the contribution of a set of TNF elements (e.g., all of the 155mm howitzer batteries) to total force effectiveness in terms of values assigned to the individual factors and the MOE used to measure them. Changes in MOE values due to technological, operational, or procedural changes to the set of TNF elements may be inserted and the change in contribution to force effectiveness calculated. Comparison of the two force effectiveness values directly indicates the worth of the changes made. Application of the process to other TNF elements (8-inch, Lance, Pershing, F-4, F-111, etc.) produces the worth of changes made to those systems as well as the information needed for comparing the worth of changes in one set of TNF elements to changes in other elements. The sum of TNF element contributions to force effectiveness is total TNF effectiveness.

1-7 SECURITY.

Daily maintenance of physical security, safety and reliability of nuclear weapons occupies large numbers of US and NATO troops. Three factors affecting security are the probabilities that storage sites will be detected and identified and that an attack will occur. The unique nature of sites suggests that they are highly detectible and identifiable. The likelihood of an attack occurring is difficult to estimate. The capability to launch an

attack does exist; therefore, we must prepare for such an event. The other factors of security are detection of an attack, responses to the attack, and ability to defeat or repel the attack. These same factors apply to TNF units as they go through the sequence of actions necessary to move from their peacetime posture to a war fighting posture.

1-8 METHODOLOGY.

The methodology embodies a mathematical expression of TNF system contribution to total force effectiveness in terms of system survivability, availability, and unit effectiveness. The methodology examines the issue of security separately because of its unique and highly significant importance in peacetime. In wartime scenarios, security considerations are subsumed in survivability and availability. The value of the methodology derives from the fact that it focuses attention on those factors most strongly affecting survivability, security, availability, and unit effectiveness and permits judgments and estimates to be expressed in quantitative terms. The methodology has been designed so that it is applicable to the entire spectrum of TNF weapon systems in any scenario. The values assigned to MOE will vary from element to element and scenario to scenario, but the expressions involving those MOE values remain unchanged. Further the methodology allows evaluation at any point in the operational sequence projected for the TNF.

1-9 SENSITIVITY ANALYSES.

Sensitivity analyses are intended to determine the relative degree of influence of changes in the factors of survivability, security, availability, and effectiveness and thus to aid in identifying areas of possible improvements as well as areas of high or low

payoff. The ideal sensitivity analysis would begin with establishment of known data and then vary unknown factors to indicate sensitivity to various values of the unknown. It has not been possible to perform such ideal analyses in this program. One of the first findings of this research has confirmed earlier suspicions that there has been no testing, evaluation, or other measurement of several of the key factors. Given this situation, the best available information has been used, and, in those cases where information is not available, ranges of values for the unknown have been assumed. TNF S^2 operational tests and evaluations are projected to develop the missing information.

1-10 UTILITY.

The methodology described herein has been used in development of the overall TNF S^2 planning to provide basic MOE. It will be used in development of Issue Evaluation Plans and in designing tests and evaluations. After refinement it can be used to verify empirical data from tests and evaluations in real time and for preliminary assessment of test and evaluation results. In conjunction with realistic cost estimates it can be of major assistance in management decisions on implementation of changes to TNF systems.

1-11 CONCLUSIONS.

The MOE methodology and framework described herein is sufficiently general for wide application. It is applicable to all of the current, new, and proposed TNF weapon systems, new concepts for their deployment and employment, and to all scenarios and will accept any of several versions of mission support capability weighting factors as long as they are common to TNF members. Assessment of improvements to survivability and security <u>must</u> also include effects on availability and unit effectiveness, as some of the proposed changes may significantly reduce availability or unit

effectiveness. Tests and evaluations must be designed to allow for measurements in these areas.

The framework and methodology are now ready to be developed into an operational analytical assessment tool. Development must include complete statements of MOE and related factors, determination of reasonable ranges of values for unknown probabilities, completion of a systems data base, integration of existing software compatible with the basic MOE logic, development of executive management software compatible with selected operating software, and demonstration of capability.

After this capability demonstration the analytical device should be ready for use in conjunction with planning, executing, and assessing the results of operational tests and evaluations, all of these pointing toward assessing the relative worth of each possible TNF improvement.

1-12 DATA.

A classified data base has been partially developed to support specific MOE applications; however, this report presents only unclassified exemplary data derived mainly from FM 101-31-3. Effects calculations not found in FM 101-31-3 were derived from the Project RAND Damage Probability Computer, a part of RAND R-1380-PR dated February 1974.

SECTION 2
INTRODUCTION

2-1 PURPOSE.

The purpose of the research program reported herein was to provide an overall framework, or methodology, within which to establish survivability and security criteria in terms of measures of effectiveness (MOE) against which the relative value of possible improvements could be judged, whether they be technological, operational, or procedural.

2-2 SCOPE.

A bottom-up approach was employed incorporating weapon systems and support elements analysis to identify critical aspects and relationships of security, survivability, availability, and unit effectiveness and thus systemic and process MOE were developed. A top-down approach was used to perform sensitivity analyses of security, survivability, availability, and effectiveness factors for each TNF element. A methodology was developed for assessment of operational, technological, or procedural changes in terms of changes in security, survivability, availability, and unit effectiveness. From a comparison of the competing factors areas were identified wherein changes would have major effect on force capability. To achieve this end the following tasks were accomplished:

2-2.1 Task One.

A data base was established to define and describe each weapon system, its effectiveness parameters, its associated missions, and its operational concepts.

2-2.2 Task Two.

The factors affecting survivability and security were identified and quantified to the extent permitted by the data base.

2-2.3 Task Three.

Sensitivity analyses were performed to determine the influence of particular factors on TNF survivability and security.

2-2.4 Task Four.

A methodology was established to evaluate the effects of conceptual equipment, procedures, or other improvements on TNF weapon system survivability and security.

2-2.5 Task Five.

The relative contributions of NATO TNF systems were described for operationally realistic scenarios.

2-3 BACKGROUND.

Theater nuclear forces (TNF) continue to play an increasingly important role in the US/NATO overall deterrent posture. These forces deter war; they help deter enemy use of nuclear weapons and also hedge against failure of NATO conventional forces. To meet the deterrent requirement, TNF must be secure and survivable, able to execute nuclear options, and meet the political demands of control, low collateral damage, and reassurance of our Allies.

Today's TNF consists of cannon artillery (8-inch and 155mm), short range surface-to-surface missiles (Honest John, Lance, and Pershing), fighter-bombers (F-104, F-4, F-111, Vulcan, etc.), air defense surface-to-air missiles (Nike Hercules), atomic demolition munitions (ADM), depth bombs (ASW), and SLBM. The characteristics and basing schemes for these varied and complex systems have evolved over a period of time which has bridged two NATO strategies. The first - MC 14/2 - was a tripwire strategy with a theater conventional force and rudimentary TNF coupled to a superior U.S. strategic force from which the major part of deterrence emanated. The second - MC 14/3 - is a flexible response strategy built around

a NATO triad of theater conventional, theater nuclear, and U. S. strategic forces in an era of U.S. strategic sufficiency.

The two NATO strategies are quite dissimilar. Under MC 14/2, warning and mobilization times were assumed to be many days. In more recent times, under MC 14/3, the warning times have been drastically shortened and are considered to be a few days or even hours. As a result of some changes in concepts (such as nuclear site consolidation and downloading of conventional ammunition, although some selected units are now being uploaded) and changes in basing and warfighting posture, largely driven by financial and security considerations, the theater response capability seems to have decreased dramatically. It appears that the increased response times in the face of shortened warning times are a contradiction of the basic strategy. The number of variables and complexity continue to increase as the already formidable USSR/WP forces are modernized.

The continuing modernization of USSR/WP theater conventional, chemical, and nuclear forces poses substantial risks, individually and collectively, to NATO's theater forces, impacts negatively on NATO war fighting capability, and thus undermines deterrence. Maintaining war fighting capability, which produces deterrence, requires:

- Enhanced security of nuclear weapons and delivery systems (assured security essential for public and political support of TNF).
- Enhanced survivability through measures such as
  - Well-planned, easily executed dispersal
  - Greater mobility to minimize time lost between positions
  - Better camouflage and deception practices
  - More and better hardening against weapon effects.

- More accurate and timely intelligence and target acquisition.
- Improved, survivable, redundant, responsive command, control and communications systems, procedures, and practices.
- Improved and diverse nuclear and conventional delivery systems generically similar to those in being but upgraded in range, mobility, effectiveness, and target discrimination to reduce collateral damage.

To identify measures that should be implemented to enhance survivability and security of TNF, possible technological, procedural, or operational improvements or solutions must be evaluated to determine the enhancement offered by each and in various combinations. As a first step, the degree of enhancement for each possible improvement can be assessed through well-defined MOE. A set of such measurements can describe the enhancement of a weapon system as a function of specific variable factors. A framework or methodology may then be developed within which sensitivity analyses of the specific variable factors may be conducted for each weapon system and support element.

The application of MOE is critical, because they define "a qualitative or quantitative measure of a system's characteristics or performance which indicates the degree to which it performs a task or meets an objective under specified conditions." By clearly defining and establishing MOE early in the evaluation process, the relative net worth of each possible improvement to a TNF element can be determined. As an example, a 30% decrease in detectibility of a particular element of TNF may result in only 10% increase in survivability and 1% increase in overall force effectiveness. The significance of these changes must be weighed against other alternatives before meaningful recommendations can be made.

A second step in the evaluation is to estimate the minimum required survivability and availability for each TNF element. The result is, of course, driven by the scenario, therefore a range of realistic scenarios must be used to develop a bounded set of values for each TNF element. This can be done by parametric analysis of availability and survivability across a range of scenarios and the effect on overall force effectiveness documented.

A third step is comparison of survivability, unit effectiveness, and availability. From such comparisons those systems that appear most to need improvements can be identified, as can the areas in which improvements are needed. At the same time, those systems offering the greatest contribution to overall force effectiveness can be identified. From the foregoing work, possible improvements can be assessed and recommendations made as to which improvements should receive priority for implementation.

SECTION 3

ISSUES, FACTORS, AND MEASURES OF EFFECTIVENESS

3-1 DEFINITION OF A MEASURE OF EFFECTIVENESS (MOE).

Measurement of the effectiveness of a system may involve a rational subjective analysis or collection of empirical data and calculation of effectiveness, or both. Empirical data may be taken from history as it appears in evaluation records and readiness reports, as well as from operational tests and other evaluations conducted for the purpose of producing and recording such data. MOE may be qualitative, if derived from subjective analysis, or quantitative, if derived from empirical data through mathematical methods. In any case, the term, "Measure of Effectiveness," is defined as - "A criterion used to express the extent to which a system performs an assigned task under a specified set of conditions."

3-2 LEVELS OF MOE.

MOE have been developed at four levels of detail with specific relationships between levels. The most highly aggregated MOE is used to measure the contribution of a weapon system (e.g., the set of 155mm howitzers) to total force effectiveness, and is called the Force MOE. It includes Functional MOE which measure performance of the functions which the given weapon system must perform to accomplish its mission. Functional MOE include Systemic MOE which measure performance of weapon system peculiar operations and supporting system operations. The finest detailed MOE are used to measure single events and are combined to form Systemic MOE. These fine grain MOE are Process MOE.

Process MOE are readily developed from operational tests or field exercises. They are expressed as a quantity, the time at which an event occurred, a ratio, or a yes/no answer to a simple

question. For instance, if a test objective were stated as, "Determine the probability of force elements 'x' being detected," one of the process MOE would be, "How many members of force elements 'x' were detected?" The other essential process MOE would be, "How many members of force element 'x' were susceptible to detection?"

The test objective stated above requires determination of a systemic MOE (the probability of detection, P_d) which cannot be measured directly in tests or exercises. However, if sufficient replications are made in a test or exercise to produce statistically valid mean values for the two process MOE described above, the systemic MOE, P_d, can be calculated as the mean number of force elements "x" detected divided by the mean number of force elements "x" susceptible to detection. Other systemic MOE can be calculated in a similar manner using appropriate process MOE.

Systemic MOE are combined according to the logical relationship of the systems involved in a specific function to form functional MOE, and functional MOE are combined to form the force MOE. Systemic and functional MOE are expressed as probabilities. Force MOE is measured in percent contribution.

3-3 DEVELOPMENT OF MEASURES OF EFFECTIVENESS.

MOE have been developed from two approaches: subjectively from the TNF S^2 issues developed in conjunction with USEUCOM, and theoretically from the factors of security, survivability, availability, and unit effectiveness of TNF elements. The two approaches have been brought together in an internally consistent manner under the methodology described in Section 4. The methodology is intended to support operational test and evaluation planning and execution, simulations and analyses, and as a tool for assessment of test and evaluation results. Hence, the logic of the methodology provides

the structure for MOE development and use. The basic issues and related factors, along with process and systemic MOE, are presented below in context of the logic for MOE development for tests and evaluations. Mean values may be used to estimate the systemic probabilities illustrating the use of repetition in the experiments, simulations, etc. used to assess the process MOE.

3-4 SECURITY FACTORS, ISSUES, AND MOE.

Physical security of nuclear storage sites is the peacetime mission of large numbers of US and NATO troops. While the record shows excellent security, there has been and is grave concern over the possibility that some terrorist group may attempt to penetrate a storage site and steal a nuclear weapon. Consequently, a major project, now under way, will upgrade physical security of nuclear storage sites worldwide during the next few years. The program will improve lighting, fencing, intrusion detection systems, and security force facilities. No data have been gathered, nor have analyses been conducted, to determine the increase in security provided by these measures.

Some of the improvements may also aid an enemy in the sense that they make a site more detectible and identifiable. Storage sites have unique lighting and stringent physical security procedures, both of which are obvious to the most casual observer. The changes being incorporated would make the character of a site even more obvious. It may be safely assumed, therefore, that detection and identification of storage sites present at most a minor problem to an enemy.

Having dealt with the first two factors of security (detection and identification of the site by an enemy), we are ready to face the third factor, the likelihood of attack. The types of attack of interest are a covert penetration attempt and an overt

ground or air assault, each by a small, heavily armed, and dedicated group. We cannot explicitly identify an attack probability unless we know something about plans for such attacks. We can, however, say that the capability for attack exists in covert agents, in terrorist groups, and in Warsaw Pact military forces. Therefore, we prepare to detect an attack and defend the attacked site.

The other factors of security are detection of an attack, responses to the attack, and repulsion or defeat of the attackers. Although the site security forces, their detection systems, and their augmentation forces are exercised frequently in drills and inspections, there is no information concerning their response to a "live" attack force. Early testing to include "live" attacks on storage site models would provide data required to analyze these factors. The issues and MOE associated with security factors are described below:

3-4.1 Issue: What is the detectibility of nuclear storage sites?

Process MOE: How many sites were detected?
At what time was each detected?

Systemic MOE: P_d = Mean number detected divided by total number of sites.

Report: Site features leading to detection.

3-4.2 Issue: What is the identifiability of nuclear storage sites?

Process MOE: How many sites were identified correctly?
At what time was each identified?

Systemic MOE: P_i = Mean number identified divided by mean number detected.

Report: Site feature leading to identification.

3-4.3 Issue: What is the likelihood of a nuclear storage site being attacked?

Process MOE: How many sites were attacked?
At what time was each attacked?

Systemic MOE: P_a = Mean number attacked divided by mean number identified.

Report: Attacking force composition and disposition.

3-4.4 Issue: What is likelihood of the site security force detecting an attack prior to fence penetration?

Process MOE: How many attacks were detected prior to penetration? At what time was each detected?

Systemic MOE: P_D = Mean number detected divided by mean number of attacks.

Report: Reason for non-detection.

3-4.5 Issue: What is the likelihood of the site security force responding to an attack?

Process MOE: How many correct responses were there?
What was the time at which attack was detected?
What was the time at which security force deployed?
What was the time at which response force was alerted?
At what time did response force arrive in position?
At what time was augmentation force alerted?
At what time did augmentation force arrive in position?

Systemic MOE: P_R = Mean number of correct responses divided by mean number of attacks detected.

Report: Reason for incorrect response.

3-4.6 Issue: How defensible are nuclear storage sites?

Process MOE: How many attacks were successful?

How many attacks were defeated?

How many attacks withdrew without penetration?

In each case, at what time did engagement end?

Systemic MOE: P_{RE} = Mean number defeated plus mean number withdrawn divided by mean number of correct responses.

Report: Reason for unsuccessful defense.

3-5 SURVIVABILITY FACTORS, ISSUES AND MOE.

Physical security of a combat unit is directly related to its survivability. Security begins with the detectibility of the unit in terms of elements or unit characteristics that make it discernible from its surroundings. Such elements include the simple presence of unit equipment and personnel, noise, movement, smoke, dust, heat emissions, and electromagnetic emissions, all of which may also serve to identify the unit as to type and size.

Existence of a unit may be detected if any element of an opposing force observes any environmental disturbance created by any element of the unit. Detection then depends on the type and level of unit activity and on an observation or surveillance element of the opposing force being in a position from which it can observe the activity. Such observation and surveillance elements include covert agents, paramilitary or guerrilla forces, long range patrols,

artillery forward observers, acoustic sensors, optical sensors, radars of several types, infrared sensors, and electromagnetic sensors with communications monitoring and direction finding capability. Many of the surveillance element types may be on the ground or in the air.

Identification of a unit begins with its detection and is complete when, in the judgment of intelligence analysts using established criteria, sufficient information is on hand to indicate the confirmed type and size of the unit. The stages of identification proceed through suspect, possible, probable, and confirmed unit type and size as the quantity and quality of information improves. Location accuracy depends upon the quantity and quality of information available, knowledge of typical force composition and operations, and analyst judgment.

From the foregoing discussion it is obvious that the probabilities of detection, identification, and location of a combat unit are strongly time dependent. A unit is susceptible as it moves into a field position. The longer it remains there the more it indicates its presence, type, and size by its activities, and the more information enemy surveillance systems can gather. Thus one key factor in enhancing unit survivability is knowing enemy targeting criteria and procedure so that exposure time (stay time in a position) can, by doctrine, be made shorter than the enemy intelligence and target acquisition cycle. To the extent that control measures can reduce or mask unit activity information available to enemy surveillance systems, the longer the exposure time may be, thus increasing both survivability and availability for the primary mission. Control measures include intensive training in and command supervision of occupation and improvement of unit position without disturbing the surroundings, blending with the landscape, camouflage

and concealment, noise and light discipline, communication discipline, remote transmitting antennas, and radars in a non-radiating mode until needed.

Another key factor in enhancing unit survivability is disinformation. This includes dummy firing positions, decoy communications nets, decoy radars, stay-behind communications in old positions, deceptive movement of people and equipment, and messages with disinformation on real and dummy communications nets. Disinformation must be developed and controlled with great care so that it and its dissemination means appear completely authentic, else it becomes obvious and useless.

Issues and MOE associated with survivability factors are described below:

3-5.1 Issue: What is the detectibility of a tactical unit in a field location?

Process MOE: How many units were detected?
At what time was each detected?

Systemic MOE: P_d = Mean number of units detected divided by total number of units susceptible.

Report: Elements of unit detected and means by which detected.

3-5.2 Issue: How identifiable are tactical units in field locations?

Process MOE: How many units were identified correctly?
At what time was each identified?

Systemic MOE: P_i = Mean number identified divided by mean number detected.

3-5.3 Issue: How efficient are WP target acquisition and fire support systems?

Process MOE: How many units were targeted?
At what time was each targeted?

Systemic MOE: P_t = Mean number targeted divided by mean number identified.

Report: Reason not targeted.

3-5.4 Issue: How accurate and timely are WP counterforce fires?

Process MOE: How many units were actually hit?
At what time was each hit?

Systemic MOE: P_h = Mean number hit divided by mean number targeted.

Report: Reason for non-hit.
Number of units evacuating position before arrival of ordnance.

3-5.5 Issue: How lethal are WP counterforce fires?

Process MOE: How many units were destroyed?
Which elements of each unit were destroyed?
At what time was each destroyed?
How many undestroyed units were neutralized?
Which elements of each unit were neutralized?
At what time was each neutralized?

Systemic MOE: P_n = Mean number neutralized divided by mean number hit.
P_k = Mean number destroyed divided by mean number neutralized.

Report: Reason for non-destruction/neutralization.
Time to replace destroyed units.
Time to repair damaged units/elements.

3-5.6 Issue: How vulnerable are tactical units to collateral damage?

Process MOE: How many units received collateral damage?
How many units were neutralized by collateral damage?
How many units were destroyed by collateral damage?

Systemic MOE: P_{cd} = Mean number receiving collateral damage divided by mean number not targeted.

P_{ncd} = Mean number neutralized by collateral damage divided by mean number receiving collateral damage.

P_{kcd} = Mean number destroyed by collateral damage divided by mean number neutralized by collateral damage.

3-6 AVAILABILITY FACTORS, ISSUES, AND MOE.

A combat unit can contribute to force effectiveness only if it is available when called on to perform its mission. The factors affecting availability include movement between fighting positions, ability to communicate, ammunition supply, suppressive fires, and maintenance. The maintenance factor applies to units damaged or neutralized in combat but not to scheduled maintenance which is accomplished during slack periods.

Suppressive fires may be direct fires intended to neutralize or destroy, harassing fires, interdiction fires, or stray rounds intended for other targets. In any case, the unit is strongly inhibited from its mission and may be forced to evacuate its position in order to survive.

The ammunition resupply system is designed to insure that no unit runs out of ammunition. However, it is conceivable that a battle may become so intense that, through a combination of combat loss, expenditure on enemy targets, and inhibition of resupply, a unit may be out of ammunition.

Communication is vital to all munitions delivery systems, be they artillery, missiles, or aircraft. Communication may be impossible due to damage to communications equipment, weather conditions, distance, or enemy electronic warfare.

A delivery unit may move from one fighting position to another for any of several reasons. Incoming fires may force evacuation for survival. In the attack the unit will move in order to support the attacking force. In the defense the unit will move with the defending force. Doctrine may require a unit to move after being in a position for a specified time.

Issues and MOE associated with availability factors are described below:

3-6.1 Issue: How often are tactical delivery units unavailable due to movement between positions?

Process MOE: During the time period of interest (t_i-t_o), how many moves occurred from one position to (or toward) another? What were the beginning times (t_b) and closing times (t_c) for each move?

Systemic MOE: P_{mo} = Number of moves times average moving time (t_c-t_b) divided by total units times time period (t_i-t_o).

$$P_{mo} = \frac{n_{mo}\ (t_c - t_b)_{mo}}{n_j\ (t_i - t_o)}$$

Report: Reason for move.

3-6.2 Issue: How often are tactical delivery units unable to communicate with their control headquarters?

Process MOE: During the time period of interest (t_i-t_o), at what time was communication with control headquarters lost (t_l)?
At what time restored (t_r)?
How many times was communication lost with control headquarters?

Systemic MOE: P_c = Number of times communication was lost times average time interval without communication (t_r-t_l) divided by total units times time period (t_i-t_o)

$$P_c = \frac{n_c\ (t_r - t_l)_c}{n_j\ (t_i - t_o)}$$

Report: Reason for loss of communication.

3-6.3 Issue: How often are tactical delivery units out of ammunition?

Process MOE: During the period of interest (t_i-t_o), how many times were units unavailable due to being out of ammunition?
At what time was each unit out of ammunition (t_e)?
At what time was each unit's ammunition supply replenished (t_{re})?

Systemic MOE: P_e = Number of times out of ammunition times average time interval without ammunition $(t_{re}-t_e)$ divided by total units times time interval (t_i-t_o)

$$P_e = \frac{n_e\ (t_{re}-t_e)_e}{n_j\ (t_i-t_o)}$$

Report: Reason for being out of ammunition.

3-6.4 Issue: How often are tactical delivery units under suppressive fire?

Process MOE: During the period of interest (t_i-t_o), how many times were units under fire? What were the beginning (t_b) and ending (t_c) times for incoming fires?

Systemic MOE: P_s = Number of times receiving fire times average duration of fire (t_c-t_b) divided by total number of units times time period (t_i-t_o).

$$P_s = \frac{n_s\ (t_c-t_b)_s}{n_j\ (t_i-t_o)}$$

Report: Type of fire.

3-6.5 Issue: How often are tactical units unavailable due to maintenance requirements:

Process MOE: During the period of interest (t_i-t_o), how many times were tactical delivery units unavailable due to maintenance requirements?

What were the beginning (t_m) and ending times (t_f) to perform maintenance?

Systemic MOE: P_{ma} = Number of times requiring maintenance times average period for performing maintenance (t_f-t_m) divided by total units times period (t_i-t_o).

$$P_{ma} = \frac{n_{ma}\ (t_f - t_m)_{ma}}{n_j\ (t_i - t_o)}$$

Report: Reason for maintenance

Elements requiring repair or replacement.

3-7 UNIT EFFECTIVENESS FACTORS, ISSUES, AND MOE.

The factors of unit effectiveness begin outside the unit with the capability to detect elements of the opposing force, identify them, and assign them as targets to munitions delivery units. Factors internal to the unit include timeliness and accuracy of response to an assigned mission. Lethality of the munitions is a factor and is a function of the munition and its target. Collateral damage is an important factor when nuclear munitions are employed; less so for conventional munitions.

Issues and MOE associated with effectiveness factors are described below:

3-7.1 Issue: What is the NATO force capability to detect Warsaw Pact tactical force elements?

Process MOE: How many WP force elements were detected?

Systemic MOE: P_d = Mean number of elements detected divided by number of elements susceptible to detection.

Report: Elements of units detected and means by which detected.

3-7.2 Issue: What is the NATO force capability to identify WP force elements?

Process MOE: How many WP force elements were identified correctly?

What were the times at which each was identified (t_i)?

Systemic MOE: P_i = Mean number identified correctly divided by mean number detected.

Report: Reason for incorrect or non-identification.

3-7.3 Issue: How efficient are US/NATO target acquisition and fire support systems?

Process MOE: How many WP force elements were targeted?

What were the times of assignment as targets?

What were the times of mission launch/firing?

What were the assigned times on target?

Systemic MOE: P_t = Mean number assigned as targets divided by mean number correctly identified.

Report: Reason not targeted.

3-7.4 Issue: How accurate and timely are US/NATO fires?

Process MOE: How many targets were attacked?

How many target elements were still in the attacked positions?

What were the times on target?

What were the times of end of mission?

Systemic MOE: P_h = Mean number of active target elements actually hit divided by mean number of targets assigned.

Report: Missions aborted.
Missions diverted.
Ordnance expended.

3-7.5 Issue: How lethal are US/NATO fires?

Process MOE: How many WP target elements were destroyed?
How many WP target elements were neutralized?
How many WP target elements not hit received collateral damage?
How many WP target elements receiving collateral damage were neutralized?
How many WP target elements neutralized by collateral damage were destroyed?
What were the times of damage?

Systemic MOE: P_k = Mean number of WP target elements killed divided by mean number neutralized.

P_n = Mean number of WP target elements neutralized divided by mean number hit.

P_{cd} = Mean number of WP target elements receiving collateral damage divided by mean number not hit by targeting.

P_{ncd} = Mean number of WP target elements neutralized by collateral damage divided by mean number receiving collateral damage.

P_{kcd} = Mean number of WP target elements destroyed by collateral damage divided by mean number neutralized by collateral damage.

Report: Reason for ineffectiveness.
Damage assessment.

SECTION 4
METHODOLOGY

4-1 INTRODUCTION.

The probabilities associated with the factors of survivability, availability, and unit effectiveness may be combined to produce a probabilistic statement of unit contribution to force effectiveness. When weighted by the ratio of system mission support capability to total force capability, a statement of system contribution to total force effectiveness is produced. When summed over the contributing systems, a statement of total force effectiveness is formed. These statements are useful in evaluating the relative merits of system changes in terms of resultant changes in contribution to force effectiveness and in extrapolating system changes to the total force. The set of statements described above, when taken with an equivalent statement of physical security for nuclear weapons, constitutes a methodology for evaluating TNF element changes (technical, procedural, or operational) and establishing their individual and relative merit.

Before proceeding with the detailed explanation of the methodology, some general comments on its nature are in order. First, the methodology has been designed so that it is applicable to the entire spectrum of weapon system elements in the TNF. The expressions for survivability, availability, and unit effectiveness can be applied without modification to any TNF element in conventional or nuclear scenarios, whether that element is a 155 mm battery, an F-4 squadron, a Pershing unit, or a unit of some other type. The probabilities involved will, of course, vary from element to element, but the expressions involving those probabilities remain unchanged. This approach has been taken in order to provide the

uniformity necessary for overall evaluation of the TNF. Second, the methodology has been organized so that it can be used to examine survivability, security, availability and unit effectiveness at any point in the operational sequence projected for the TNF. This fact is illustrated in Figure 4-1 which indicates how the security and/or survivability/availability/effectiveness analysis may be applied at any stage in the operation of the TNF from peacetime through transition into war. This aspect of the methodology, in addition to providing guidance for test design, meets the requirement that an evaluation scheme for the TNF S^2 program must recognize the scenario and time dependent nature of security and survivability.

4-2 PROBABILITIES AND INFERENCES.

To the extent that values for the probabilities used as MOE can be determined from existing data or through testing, they can be taken to represent an objective description of reality. However, the real value of the MOE scheme described here lies not so much in the particular values assigned to the probabilities involved (which by their nature will always be subject to dispute, even when they are based on data or tests), but rather in the fact that the method focuses attention on those factors most strongly affecting security and survivability and provides a framework which permits judgments and estimates to be expressed in quantitative terms. It is recognized that, in the final analysis, decisions regarding force improvements will be based on subjective judgment with due consideration of available quantitative data. The MOE framework developed here will provide a useful tool for integration of quantifiable test data and qualitative judgment which must be accomplished as part of the decision making process.

The basic mathematical notion involved in the MOE framework is that of probability. In particular, with the exception of the measure for total force effectiveness, the proposed measures of

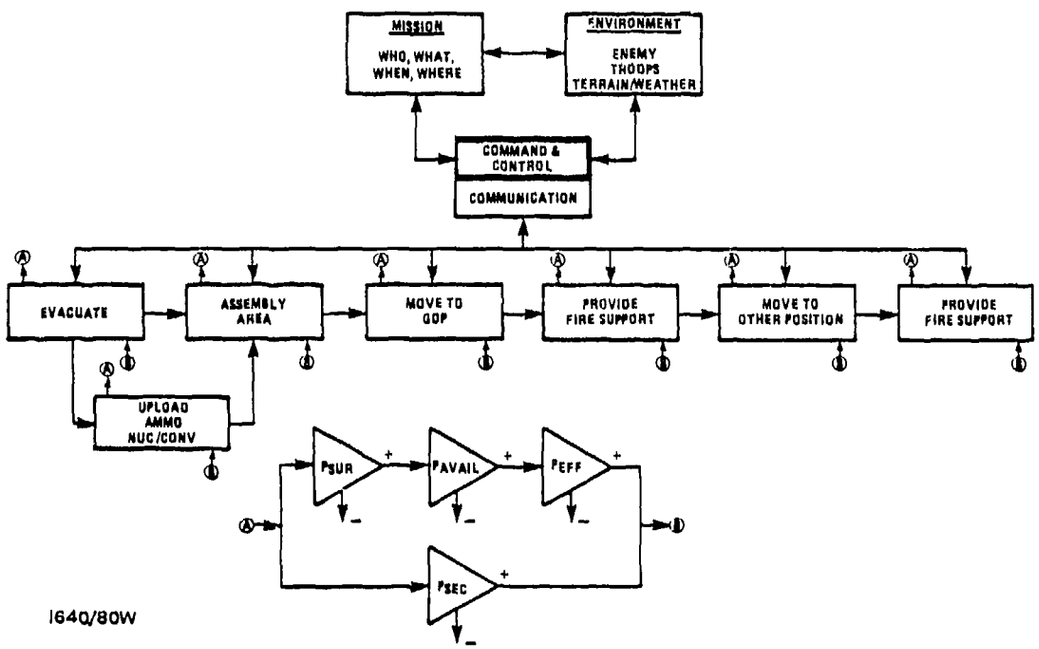

Figure 4-1. MOE scenario logic.

effectiveness are probabilities that certain events will take place or that force elements will be in certain "states" under various circumstances. For instance, it is proposed that we examine P_{SEC}, the probability that a nuclear storage site is secure in the presence of a particular type of threat, (e.g., terrorist threat or covert peacetime threat); or P_{SUR}, the probability that a TNF force element, (e.g., a 155mm battery or an F-4 squadron), will survive an attack by an enemy force element. As probabilities the measures of effectiveness in the framework are dimensionless (unit-free) numbers between 0 and 1 subject to the following rules:

4-2.1 Rule 1.

Given events or states A and B, the conditional probability that the event (B given A) will occur is given by:

$$P(B/A) = \frac{P(A \text{ and } B)}{P(A)},$$

where P(B/A) denotes the probability that B will occur <u>given</u> that A has occurred.

4-2.2 Rule 2.

Given events A and B, the probability that the event (A or B) will occur is given by:

$$P(A \text{ or } B) = P(A) + P(B) - P(A \text{ and } B)$$

If A and B are <u>mutually exclusive</u> (i.e., it cannot be the case that events A and B have both occurred), then P(A and B) = 0 and as a result:

$$P(A \text{ or } B) = P(A) + P(B)$$

If A and B are <u>independent</u> (i.e., the occurrence of A in no way affects the occurrence of B), then P(A and B) = P(A)P(B) and as a result:

$$P(A \text{ or } B) = P(A) + P(B) - P(A)P(B)$$

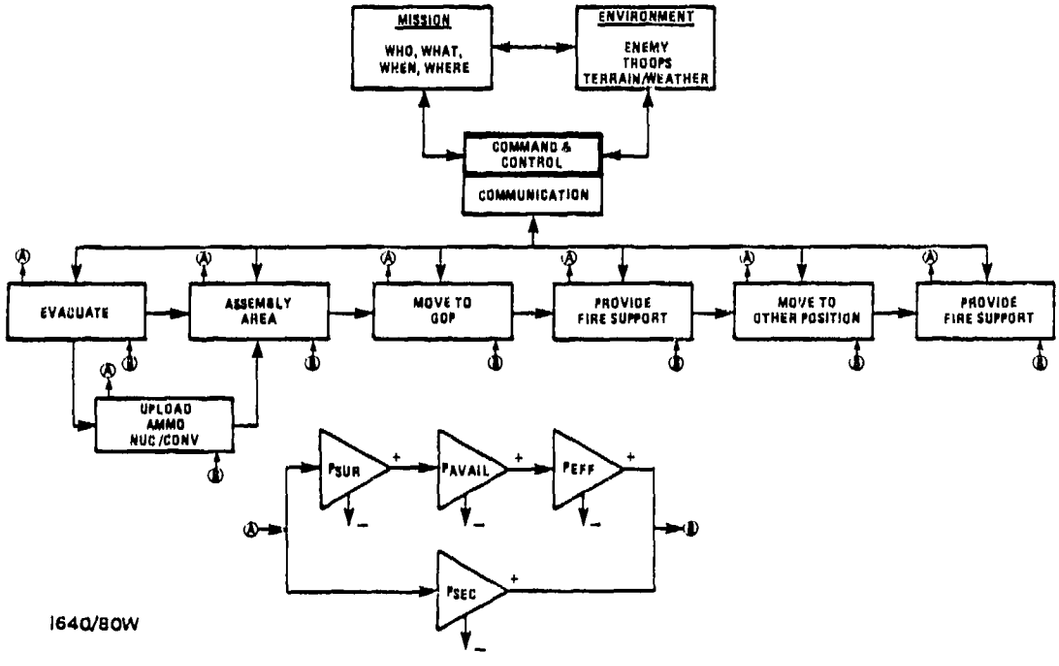

Figure 4-1. MOE scenario logic.

4-2.3 Rule 3.

Given an event A, the probability that A will not occur is 1-P(A).

For notational convenience parentheses are not used in the probabilities appearing in the following sections. In addition, it is to be understood that, in the areas of survivability, security and unit effectiveness whenever probabilities are multiplied, the appropriate probabilities are to be understood as conditional. For example, in the formula for P_{SEC}, the expression P_d P_i P_a occurs. This product denotes the probability that unit or site is detected by the threat (d), identified (i), and subjected to an attack or attempted penetration (a); and the probabilities P_i and P_a represent the conditional probabilities P(i/d) and P(a/d and i) respectively. All of the formulas derived in the following sections for P_{SEC}, P_{SUR}, P_{AVAIL}, and P_{EFF} are obtained by defining and analyzing the events involved, in terms of the factors identified in the previous chapter, and applying the rules above, alone and in combination, to those events.

In application to experiments or processes occurring in the real world, the probability of an event represents the relative frequency with which the event will occur if the experiment or process which could result in the event is repeated many times. However, the extent to which the MOE probabilities can be interpreted in this way is limited and varies with the particular MOE being discussed. For instance, a value for the probability P_{SUR} may be based on data gathered from tests or simulations in which statistically sufficient repetitions may not have been done or which do not clearly support generalization and application to the TNF environment. Or one can argue that the content of P_{SEC} as a probability in the relative frequency sense is limited because the "experiment"

of having a terrorist threat attempt a penetration of a nuclear storage site, if it ever takes place at all, is likely to take place only once. (Put another way, how much meaning is there in the statement that the probability that a site is secure against covert peacetime penetration is .7?).

It is for these reasons that it is suggested that not too much intrinsic significance be attached to or expected from the MOE in the framework. The usefulness of these probabilities as MOE will be based instead primarily on the way (in terms of both direction and magnitude) in which they change following tests and evaluations of the various alterations proposed for the TNF. For instance, if following tests of a new security procedure, the computed or estimated P_{SEC} for a particular kind of nuclear storage site moves from .7 to .85 (so that the change $\Delta P_{SEC} = .15$), then it is reasonable to conclude that the security status of the site has been improved, and a quantitative measure of the amount of improvement has been obtained. Comparative examination of the Δ P's resulting from tests of different proposals, together with sensitivity analysis in the context of the expression for total force effectiveness, will then be of use in prioritizing the proposed changes, both in terms of absolute impact on security, survivability, availability, and unit effectiveness and in terms of impact-for-cost.

Detailed descriptions of the MOE for security, survivability, availability, unit effectiveness and total force effectiveness are provided in the following sections. The method of each section is the same; the events in question are defined and formulas for their probabilities are derived based on those definitions (See Glossary).

4-3 PHYSICAL SECURITY.

The security factors of Section 3 fit together in a logical sequence as shown in Figure 4-3. If each decision point is assigned a probability of occurrence of the event at the decision point, the "yes" output is input multiplied by the event probability, and the "no" output is input multiplied by the quantity one minus the event probability. This is illustrated below in Figure 4-2 for the first event in Figure 4-3.

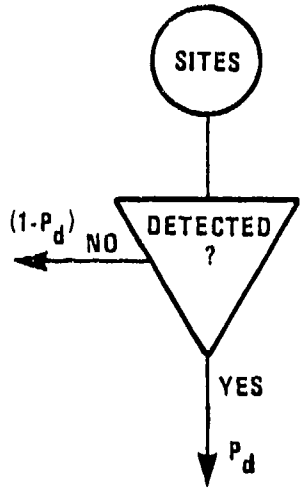

1640/80W

Figure 4-2. Decision Logic.

If such a procedure is followed through the logic chart, it can be demonstrated that there exist two mutually exclusive outcomes whose probabilities are as follows:

$$P(\text{of being secure}) = (1-P_d P_i P_a) + P_d P_i P_a P_D P_R P_{RE}$$

$$P(\text{of not being secure}) = P_d P_i P_a \, (1-P_D P_R P_{RE})$$

Together these probabilities add to 1 since they complete the sample space. Therefore the probability of security at a site or in a particular situation is:

$$P_{SEC} = (1-P_d P_i P_a) + P_d P_i P_a P_D P_R P_{RE}$$

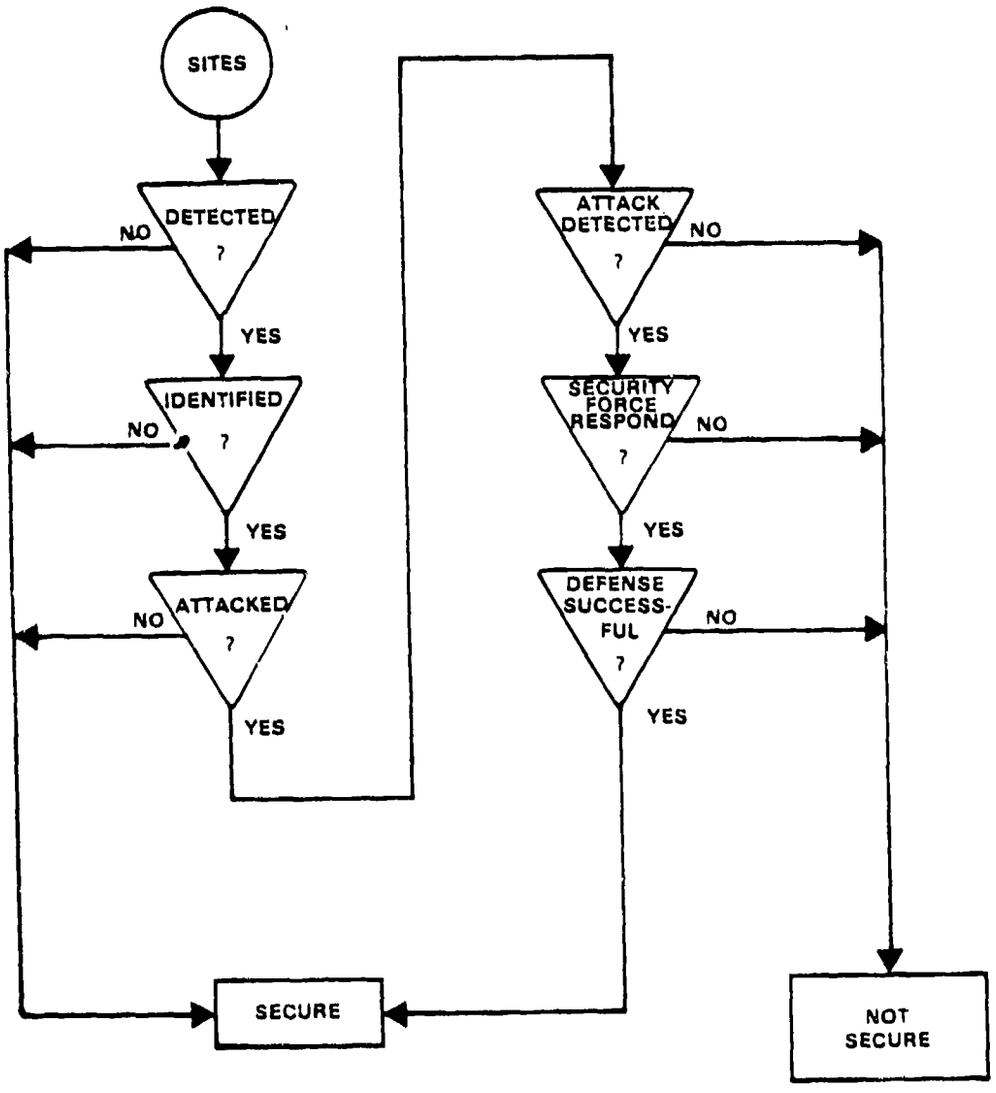

1640/80W

Figure 4-3. Security Relationships.

4-4 UNIT SURVIVABILITY.

The survivability factors of Section 3 fit together in a logical sequence as shown Figure 4-4. If a subset of nuclear force elements is the inpu , the output falls into one of four subsets as follows (their sum is 1.0):

P(surviving undamaged) = $(1 - P_d P_i P_t P_h)\ (1-P_{cd})$

P(surviving damaged) = $(1-P_d P_i P_t P_h)\ P_{cd}\ (1-P_{ncd}) + P_d P_i P_t P_h (1-P_n)$

P(neutralized not killed) = $(1-P_d P_i P_t P_h) P_{cd} P_{ncd} (1-P_{kcd}) + P_d P_i P_t P_h P_n (1-P_k)$

P(killed) = $(1-P_d P_i P_t P_h) P_{cd} P_{ncd} P_{kcd} + P_d P_i P_t P_h P_n P_k$

Of interest in subsequent steps is the subset of operationally ready survivors; the sum of surviving undamaged and surviving damaged.

$$P_{SUR} = (1-P_d P_i P_t P_h)(1-P_{cd}) + (1-P_d P_i P_t P_h) P_{cd} (1-P_{ncd}) + P_d P_i P_t P_h\ (1-P_n)$$

Those neutralized are returnable to operationally ready status when equipment has been repaired or replaced and people have been replaced. Those killed must be replaced.

4-5 UNIT AVAILABILITY.

The availability logic of Section 3 involves a set of <u>independent</u> but not disjoint conditions of nonavailability. Because the events involved in unit availability are independent, we are no longer dealing with conditional probabilities. Their logic is shown in Figure 4-5. It can be demonstrated from the logic of the figure that the desired solution to availability is as follows:

$$P_{AVAIL} = (1 - P_{mo})(1 - P_c)(1 - P_e)(1 - P_s)(1 - P_{ma})$$

$$= \prod_{j=1}^{5} (1 - P_j)$$

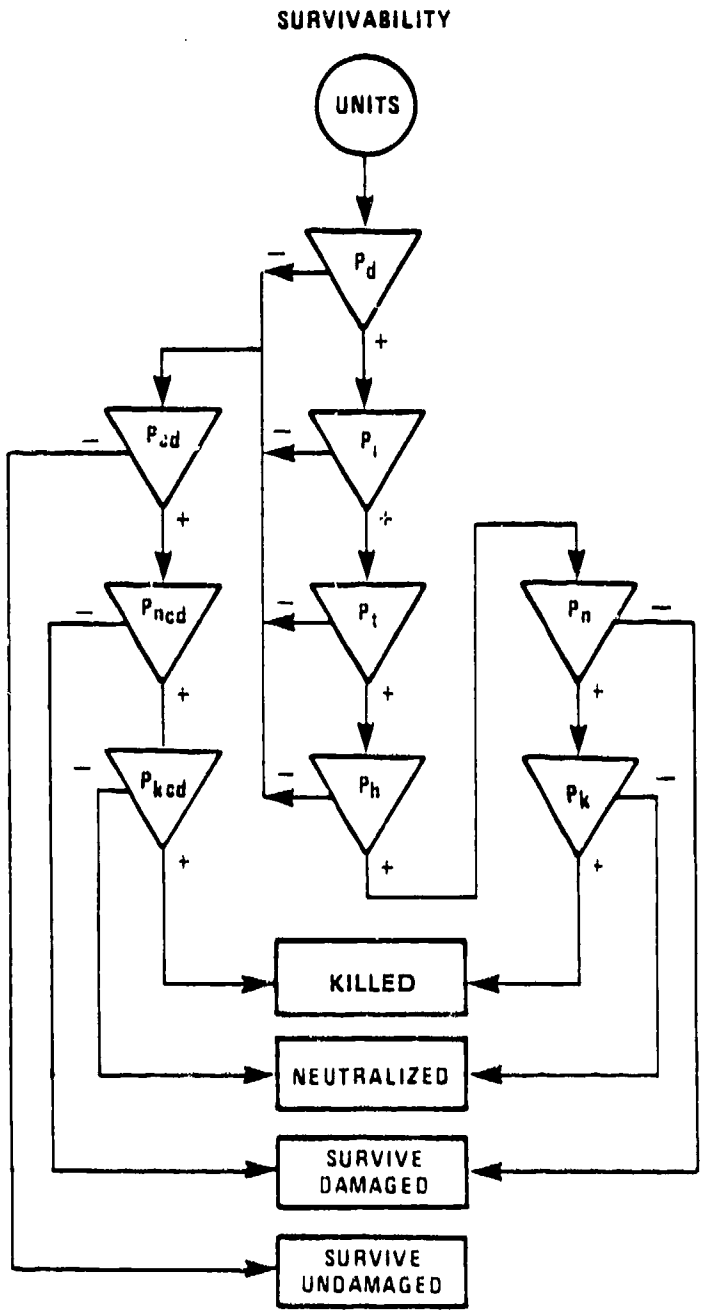

1640/80W

Figure 4-4. Survivability relationships.

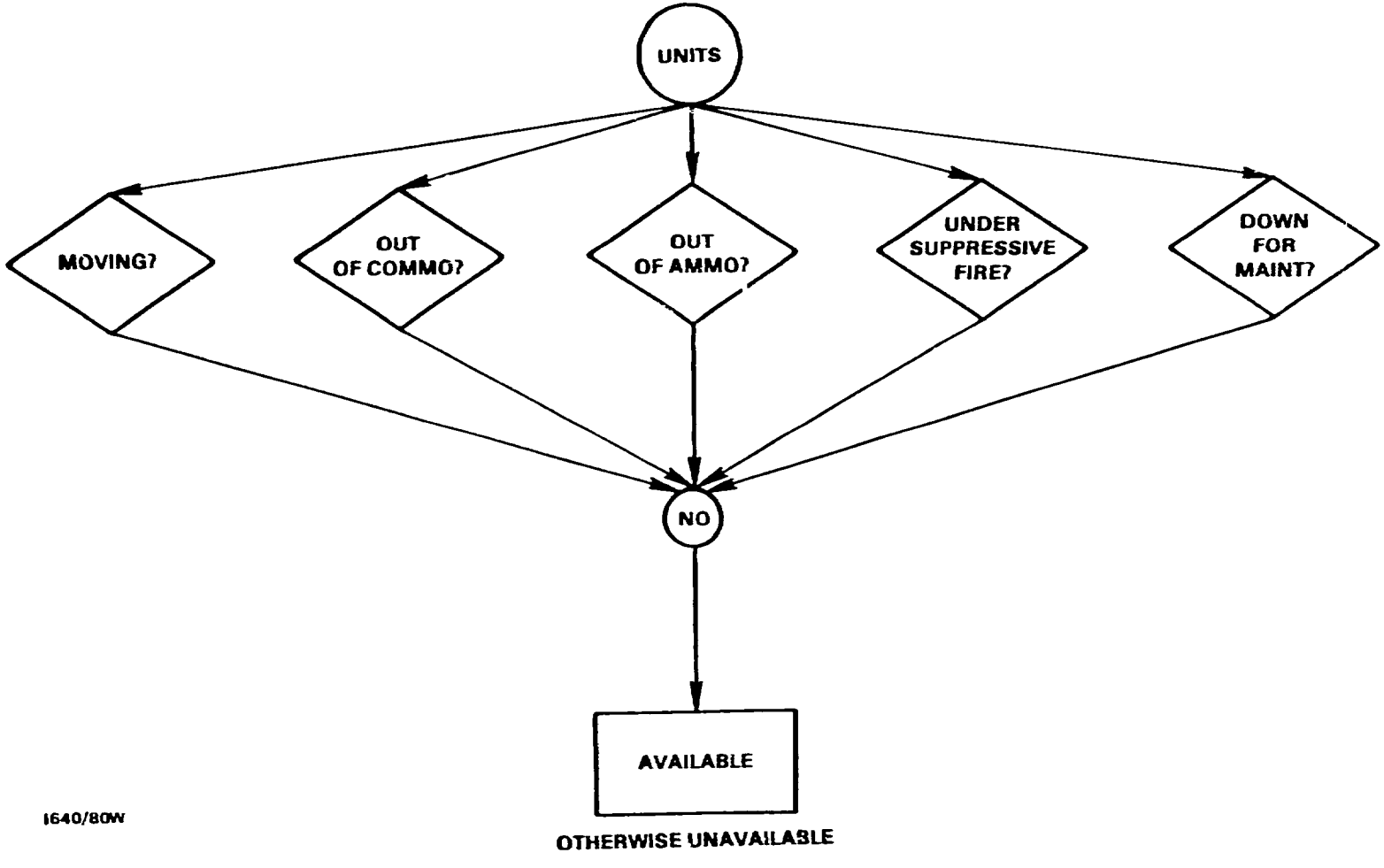

Figure 4-5. Availability Relationships.

There is a more involved solution that accounts for the possibility of a unit being unavailable for more than one reason and calculates all possible interactions among the availability events. Since both solutions are statistically correct and will arrive at the same result, the less complicated solution has been used.

4-6 UNIT EFFECTIVENESS.

The unit effectiveness logic is presented in Figure 4-6. The payoff for unit effectiveness is targets killed and neutralized. If a subset of WP nuclear force elements is the input, the output falls into one of the following subsets of the sample space:

$$P(\text{surviving undamaged}) = (1-P_d P_i P_t P_h)\,(1-P_{cd})$$

$$P(\text{surviving damaged}) = (1-P_d P_i P_t P_h) P_{cd} (1-P_{ncd}) + P_d P_i P_t P_h\,(1-P_n)$$

$$P(\text{neutralized not killed}) = (1-P_d P_i P_t P_h) P_{cd} P_{ncd} (1-P_{kcd}) + P_d P_i P_t P_h P_n\,(1-P_k)$$

$$P(\text{killed}) = (1-P_d P_i P_t P_h) P_{cd} P_{ncd} P_{kcd} + P_d P_i P_t P_h P_n P_k$$

The desired expression is the sum of targets at least neutralized by direct attack or by collateral damage.

$$P_{EFF} = P_d P_i P_t P_h P_n + (1-P_d P_i P_t P_h) P_{cd} P_{ncd}$$

4-7 UTILITY.

The foregoing expressions may be used independently to evaluate the impact of system changes on security, survivability, availability, or unit effectiveness individually. Each expression may be weighted by the ratio of members of a given system to the

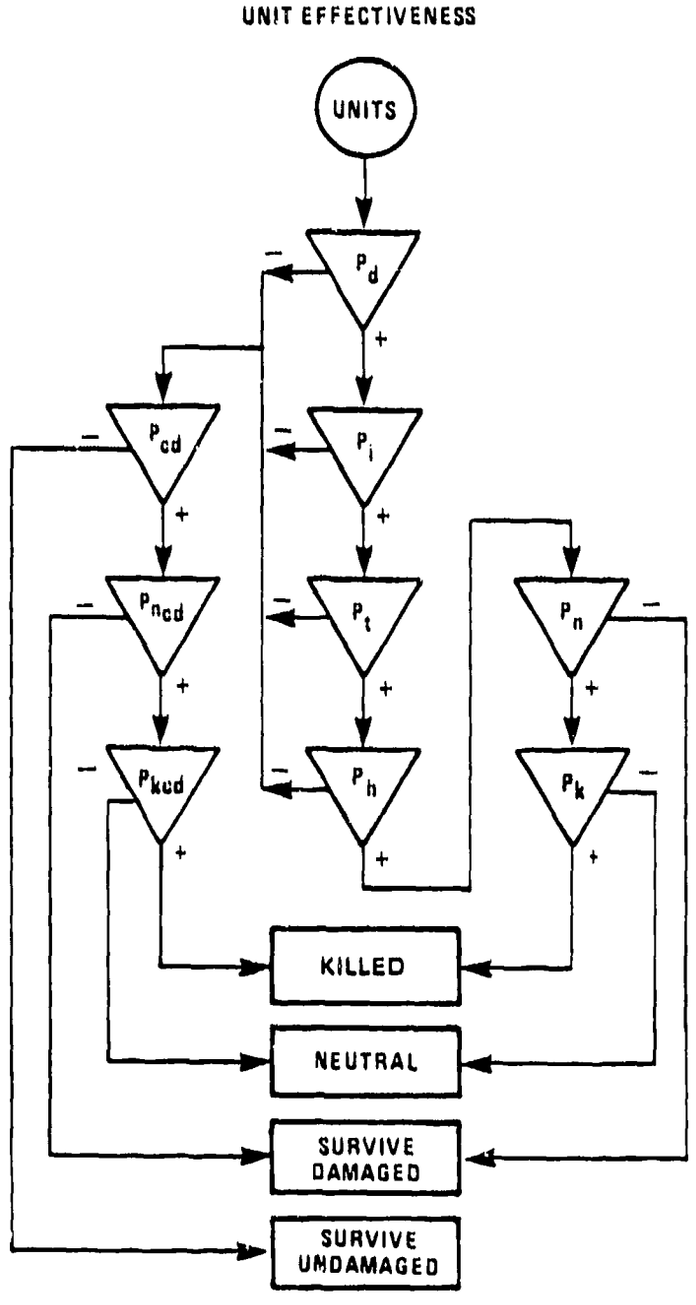

Figure 4-6. Unit effectiveness relationships.

total force to indicate system contribution to the total force for the factor under examination. For example:

$$P_{SUR_j}\left(\frac{n_j}{N}\right),$$

may be used to express the relative contribution of TNF element "j" with members "n" to total force survivability where N is the number of elements in the force. A danger inherent in using the expressions individually is the risk of suboptimizing. For instance, a number of opportunities exist to improve security and survivability. Some of them reduce availability. In those cases a false picture is generated unless a total systems approach is taken.

4-8 TOTAL FORCE EFFECTIVENESS.

Any feature of TNF that inhibits force effectiveness reduces force utility. It is necessary that all of the impacts of force changes be assessed so that the relative worth of changes may be identified. The desired objective function may be developed from the conditional probabilities presented above and appears as follows:

$$P(\text{Force Effectiveness}) = P_{SUR}\ P_{AVAIL}\ P_{EFF} \quad \text{(See Figure 4-7)}$$

This expression reflects the fact that, in order for a unit to contribute its full share to total force effectiveness, it must survive, be available when called on, and be effective in performing its mission. Since changes in system contributions to force effectiveness are desired, a weighting factor is applied to the above expression for force effectiveness. This weighting factor is a function of the particular system and the scenario in which it

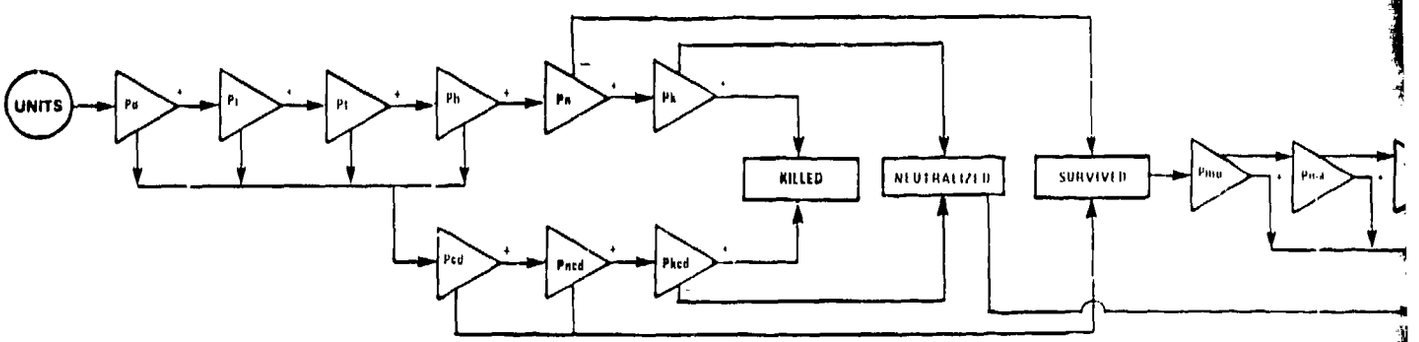

1640/80W

Figure 4-7. Force ef

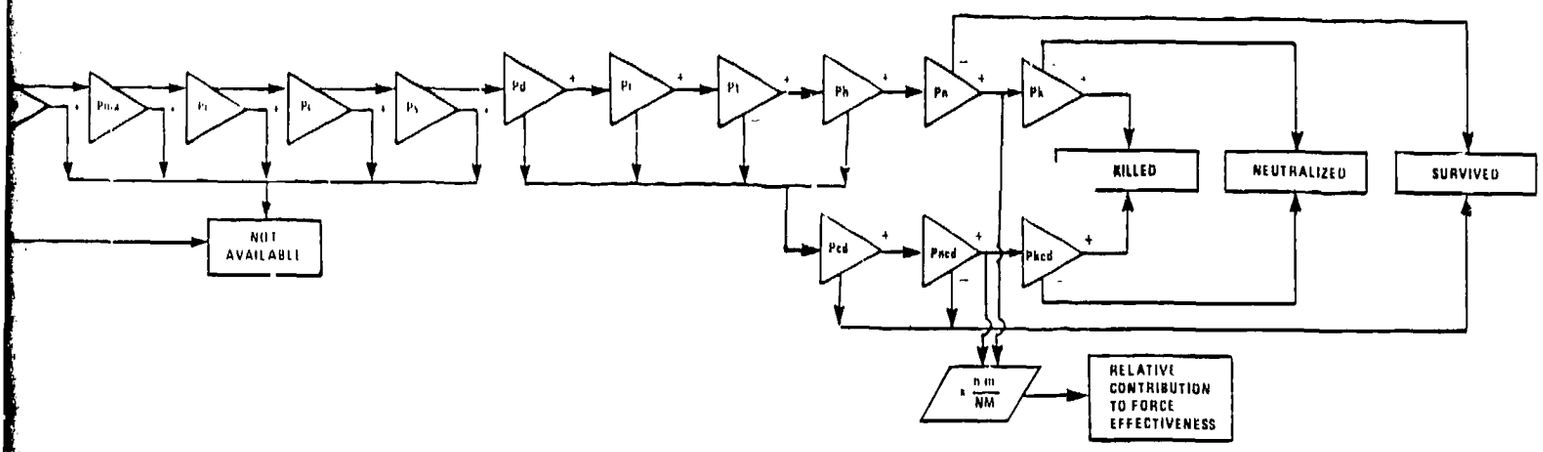

7. Force effectiveness logic.

appears. Each has an impact on the contribution to force effectiveness. The contribution of system "j" in scenario "i" to total force effectiveness is:

$$E_{F_{ij}} = P_{SUR_{ij}} \, P_{AVAIL_{ij}} \, P_{EFF_{ij}} \, n_{ij} \, m_{ij}$$

where n_{ij} is the number of members of system "j" in scenario "i" and m_{ij} is the mission support capability of a unit of type "j" in scenario "i". Mission support capability may be expressed in ammunition tons per hour, kilotons per hour, targets attacked per hour, or any measure common to the TNF members being compared.

4-9 APPLICATION.

The methodology is based upon well-understood relationships of conditional and joint probability. If objective or subjective values for the component probabilities are used in any of the foregoing expressions, expected values can be produced for P_{SEC}, P_{SUR}, P_{AVAIL}, P_{EFF}, and E_F. The component probabilities may be developed from several sources that include studies and analyses, operational tests and evaluations, simulations, and historical records. Reasonable estimates may also be made of unknown component probabilities and a Monte Carlo process followed for them. A series of replications using Monte Carlo techniques would produce a result approaching an expected value. If component probabilities have a finite distribution within limits, Monte Carlo techniques again could be used.

SECTION 5
SENSITIVITY ANALYSES

5-1 INTRODUCTION.

Sensitivity analyses are intended to determine the relative degree of influence changes at the systemic level have on the functional levels of survivability, security, availability, and unit effectiveness and thus to aid in identifying both areas of possible improvement and areas of high or low payoff. The effects on total force effectiveness are then examined by combining the corresponding functional effects. Sensitivity analyses ideally begin with establishment of known data and then unknown factors are allowed to vary to indicate the sensitivity of the result to various values of the unknown. In the discussions which follow, it has not been possible to perform such ideal sensitivity analyses. One of the first findings of this research has been that even though there has been a great deal of earlier research and study, there has been no testing, evaluation, or other mensuration of several of the key factors. Given this situation, the best available information has been used, and in those cases where information is not available, "reasonable" ranges of values for the unknowns have been assumed.

With this in mind, each of the functional areas: security, survivability, availability, and unit effectiveness is discussed in turn. Each section begins with a parametric analysis of sensitivities. Here the sensitivities resulting from the MOE logic are described for a range of values in order to obtain a "top-down" view of the effects which can be expected from improvements in the factors affecting security, survivability, availability and unit effectiveness, regardless of how those improvements are obtained. The parametric analysis is followed by examples showing how the MOE can

be used in a "bottom-up" sense to evaluate, in precise quantitative terms, the relative impact some of the specific improvements being considered are likely to have. Finally, each section concludes with a statement, based on the sensitivity analysis preceding it, indicating where improvement should be sought and where the areas of high and low payoff are.

5-2 SECURITY.

From Section 4 the statement for the probability of nuclear storage site security is

$$P_{SEC} = 1 - P_d P_i P_a + P_d P_i P_a P_C P_R P_{RE}.$$

The probability that the sites have been detected and identified is unknown; however, since they have been established for years, extraordinary security measures are obvious, and weapons transfers are observable, it is reasonable to assume that the probabilities approach 1. The records indicate that there has never been an attack on any storage site. Therefore, although there has been much worry and argument and massive expenditures have been and are being made, security has been theoretically perfect. Projecting such history into the future is dangerous. We know that clandestine groups have the capability to attack nuclear weapons storage sites. We can assume the size and armament of possible attacking groups and provide defensive forces capable of defeating or repelling such attacks.

The storage sites have security forces on them 24 hours each day with response forces and augmentation forces nearby. If there is an attack, the security force must detect the attack, respond by deploying itself and call for deployment of the response and augmentation forces. The latter forces must successfully deploy and the aggregate defensive force must repel or defeat the attacking force. Although the site security forces and their response and

augmentation forces are rigorously inspected and exercised frequently, there is no record of any test or other measurement of their probabilities of detecting, responding properly, and repelling or defeating a real attack. Therefore, arbitrary values for those probabilities must be used in the sensitivity analysis.

5-2.1 Calculations.

The equation for P_{SEC} contains conditional probabilities in two groups. The first group, $P_d P_i P_a$, is the probability of an attacker detecting, identifying, and attacking a site. These probabilities always appear as a product; therefore, P_{SEC} is equally sensitive no matter which of the three components is changed. The same is true of the $P_D P_R P_{RE}$ components of the second group. Because of this, the products, $P_d P_i P_a$ and $P_D P_R P_{RE}$, may each be treated as a single variable in graphing their relationships. Entry points for such graphs are the products of whatever values are assigned to the component probabilities.

Table 5-1 was developed by substituting arbitrary values for the component probabilities. Lines 1-8 begin with an attack and a perfect defense and let the component probabilities decay uniformly. Lines 9-25 show the results of arbitrarily selected combinations of component probabilities. All of these calculations were done as follows with line 4 as an example:

$$
\begin{aligned}
P_{SEC} &= 1 - P_d P_i P_a + P_d P_i P_a P_D P_R P_{RE} \\
&= 1 - (.8)(.8)(.8) + (.8)(.8)(.8)(.8)(.8)(.8) \\
&= 1 - .512 + .262 \\
&= .750
\end{aligned}
$$

(The reader is cautioned that second and third digits in these exemplary calculations are used to indicate the results of manipulating numbers and <u>do</u> <u>not</u> indicate a level of confidence or accuracy.)

Table 5-1. Security calculations.

	ATTACKER				DEFENDER						
No.	P_d	P_i	P_a	Π	P_D	P_R	P_{RE}	Π	$1-P_dP_iP_a$	$P_dP_iP_aP_DP_RP_{RE}$	P_{SEC}
1	1	1	1	1	1	1	1	1	0	1	1
2	.95	.95	.95	.857	.95	.95	.95	.857	.143	.735	.878
3	.9	.9	.9	.729	.9	.9	.9	.729	.271	.531	.802
4	.8	.8	.8	.512	.8	.8	.8	.512	.488	.262	.750
5	.6	.6	.6	.216	.6	.6	.6	.216	.784	.047	.831
6	.4	.4	.4	.064	.4	.4	.4	.064	.936	.004	.940
7	.2	.2	.2	.008	.2	.2	.2	.008	.992	.000	.992
8	0	0	0	0	0	0	0	0	1	0	1
9	1	1	1	1	.8	.8	.8	.512	0	.512	.512
10	1	1	1	1	.6	.6	.6	.216	0	.216	.216
11	1	1	1	1	.4	.4	.4	.064	0	.064	.064
12	1	1	1	1	.2	.2	.2	.008	0	.008	.008
13	.8	.8	.8	.512	.6	.6	.6	.216	.488	.111	.599
14	.8	.8	.8	.512	.4	.4	.4	.064	.488	.033	.521
15	.8	.8	.8	.512	.2	.2	.2	.008	.488	.004	.492
16	.6	.6	.6	.216	.4	.4	.4	.064	.784	.014	.798
17	.6	.6	.6	.216	.2	.2	.2	.008	.784	.002	.786
18	.4	.4	.4	.064	.2	.2	.2	.008	.936	.001	.937
19	1	1	.2	.2	.8	.8	.8	.512	.800	.102	.902
20	1	1	.4	.4	.8	.8	.8	.512	.600	.205	.805
21	1	1	.8	.8	.8	.8	.8	.512	.200	.410	.610
22	1	1	.2	.2	.8	.8	.4	.256	.800	.051	.851
23	1	.6	.8	.48	.8	.8	.8	.512	.520	.246	.766
24	.6	.6	.8	.288	.8	.8	.8	.512	.712	.147	.859
25	.4	.4	.8	.8	.8	.8	.8	.512	.872	.066	.938

1640'80W

Lines 9-12 assumed an attack was mounted on a nuclear storage site and examined various defensive capabilities. Note the drastic decline in P_{SEC} as P_D, P_R, and P_{RE} are reduced.

Lines 13-18 assumed varying probabilities of attack and defense to illustrate the strong dependence on attack assumptions.

Line 19 assumed the storage site to be detected and identified and .2 probability of attack. The defense was rated at less than perfect with P_D, P_R and P_{RE} each = .8. The result is P_{SEC} = .902 with .8 contributed by the assumption of .2 probability of attack.

Line 20 assumed the attack to be twice as likely with other variables unchanged. Note that the overall decrease in P_{SEC} is small compared to the change in attack likelihood. Further doubling the probability of attack (line 21) produces a large change in P_{SEC} with $P_D P$ [illegible] contributing more than twice as much as $P_d P_i P_a$.

Line 2[illegible], [illegible] compared with line 19, shows the effect of halving the cap[illegible] the defensive force to repel the attacker. The small dec[illegible] P_{SEC} illustrates the low sensitivity to changes in $P_D P_R P_{RE}$ [illegible] $_d P_i P_a$ is small.

Lines 23-[illegible], when compared to line 21, illustrate the effect on P_{SEC} of making storage sites less identifiable and less detectible. Again note the increasing contribution by $P_d P_i P_a$ as the component probabilities are reduced.

5-2.2 Graphing the Results.

Figure 5-1 presents a graph of the relative contributions to P_{SEC} by $(1 - P_d P_i P_a)$ and $(P_d P_i P_a P_D P_R P_{RE})$. The $(1-P_d P_i P_a)$ contribution appears as vertical lines with values labeled above the horizontal axis as a function of the values of $P_d P_i P_a$ below the axis. The $(P_d P_i P_a P_D P_R P_{RE})$ contribution is shown as hyperbolic

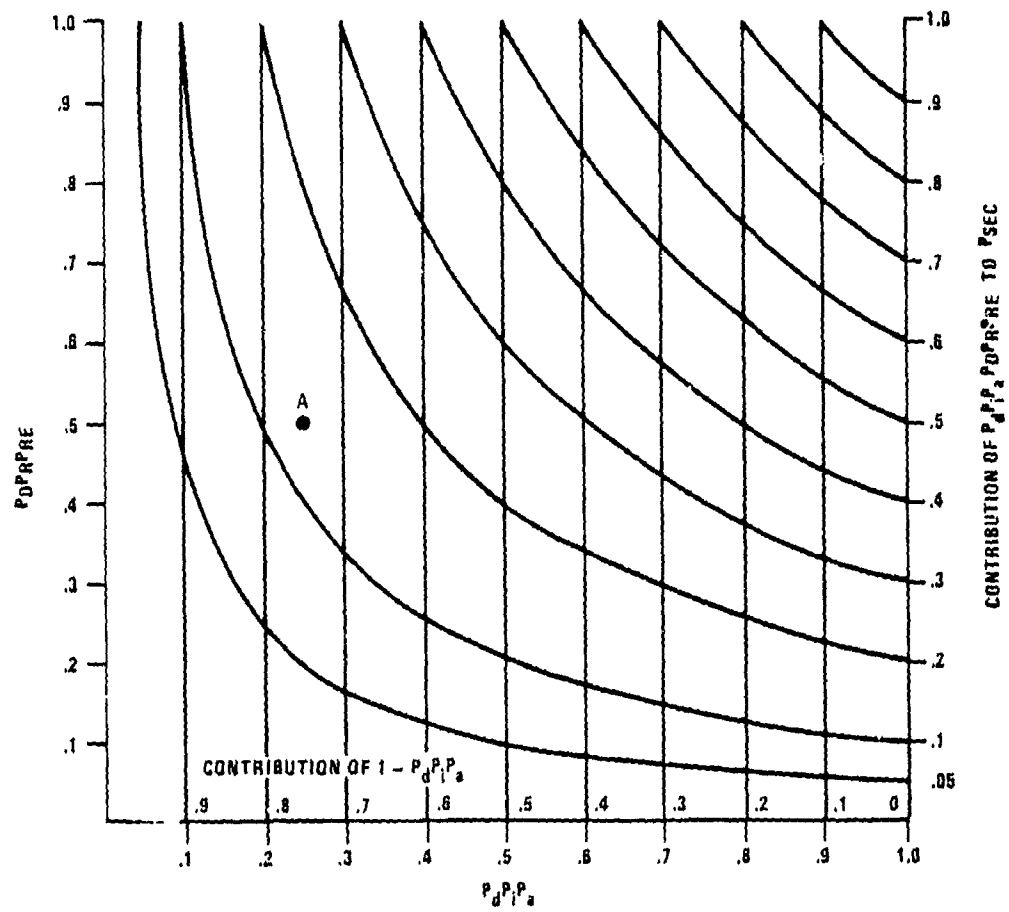

1640/80W

Figure 5-1. Relative contributions to P_{SEC}.

curves with values labeled on the right-hand side. To use Figure 5-1, select values for $P_dP_iP_a$ and $P_DP_RP_{RE}$, locate the point on the graph described by these products, interpolate between vertical lines for $1 - P_dP_iP_a$ and between curves for $P_dP_iP_aP_DP_RP_{RE}$, add the two interpolated values. The result is P_{SEC}. For example, if $P_dP_iP_a = 0.25$ and $P_DP_RP_{RE} = 0.5$, point A is located. The interpolated value of $1-P_dP_iP_a$ is 0.75; for $P_dP_iP_aP_DP_RP_{RE}$ the value is 0.125. The sum is $P_{SEC} = 0.875$. Figure 5-2 shows P_{SEC} directly using the same entry values. Figure 5-3 superimposes upon Figure 5-2 a set of curves that indicate the ratio of contributions to P_{SEC} as a function of the entry values.

5-2.3 Sensitivities.

It is readily observed from the figures that sensitivities depend upon the entry values. Entry values that locate points to the right of the curve labeled "1" at the top of Figure 5-3 are more sensitive to changes in $P_DP_RP_{RE}$, while points to the left are more sensitive to changes in $P_dP_iP_a$. Increased displacement of data points from the curve labeled "1" exhibit increased sensitivities as indicated by the curves to the right and left. As was stated earlier, history places us near $P_dP_iP_a = 0$ on the horizontal axis where P_{SEC} is nearly insensitive to changes in $P_DP_RP_{RE}$ and almost totally dependent on $P_dP_iP_a$.

The parametric sensitivity analysis of P_{SEC} given above shows how various changes in the systemic MOE probabilities of detection, identification, attack, and response affect security over a range of baseline values. In terms of the effect proposed improvements will have on security two important points emerge. First, the level of impact any given fix will have on security depends to a large extent on what the baseline security factor values are for the system in question. For instance Figure 5-2 shows that in those

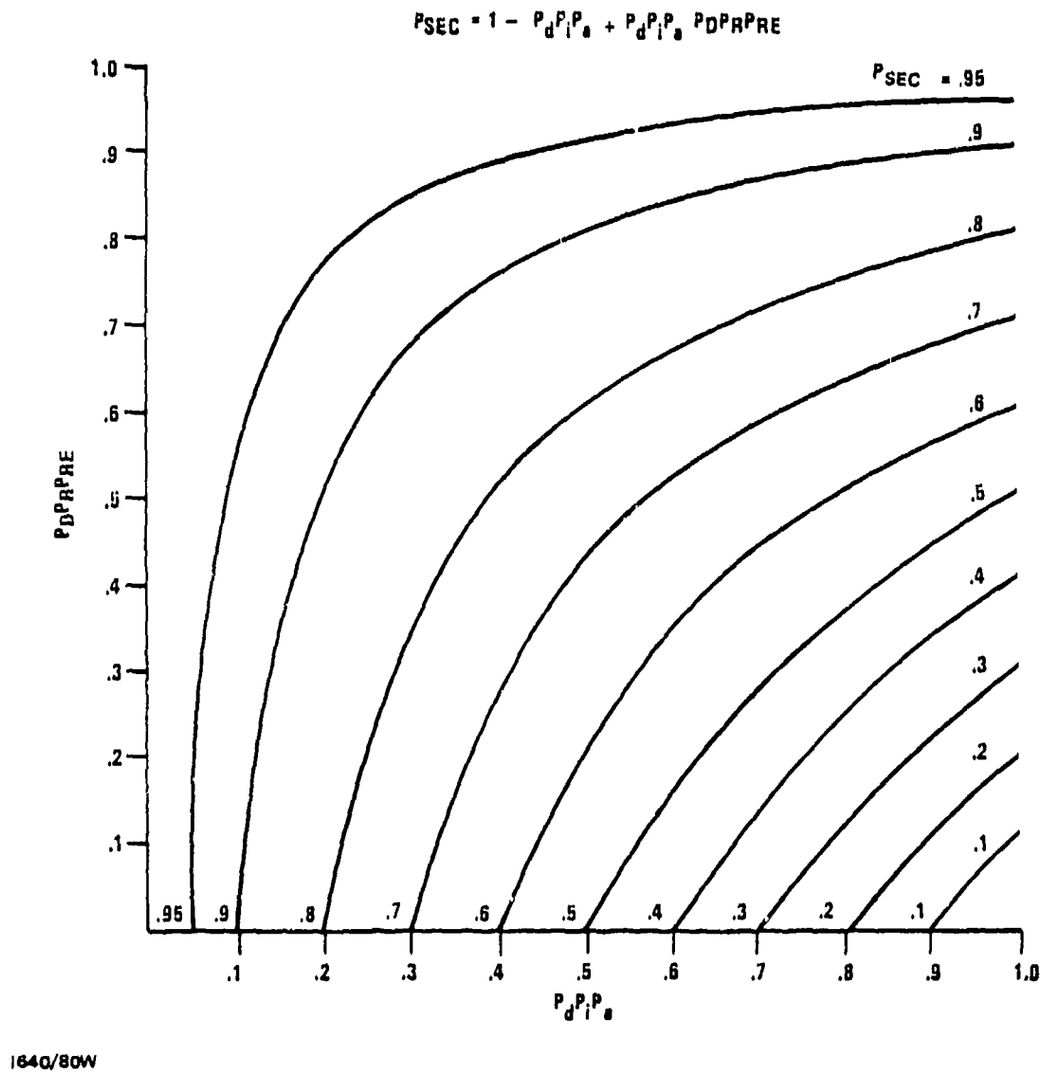

Figure 5-2. P_{SEC}.

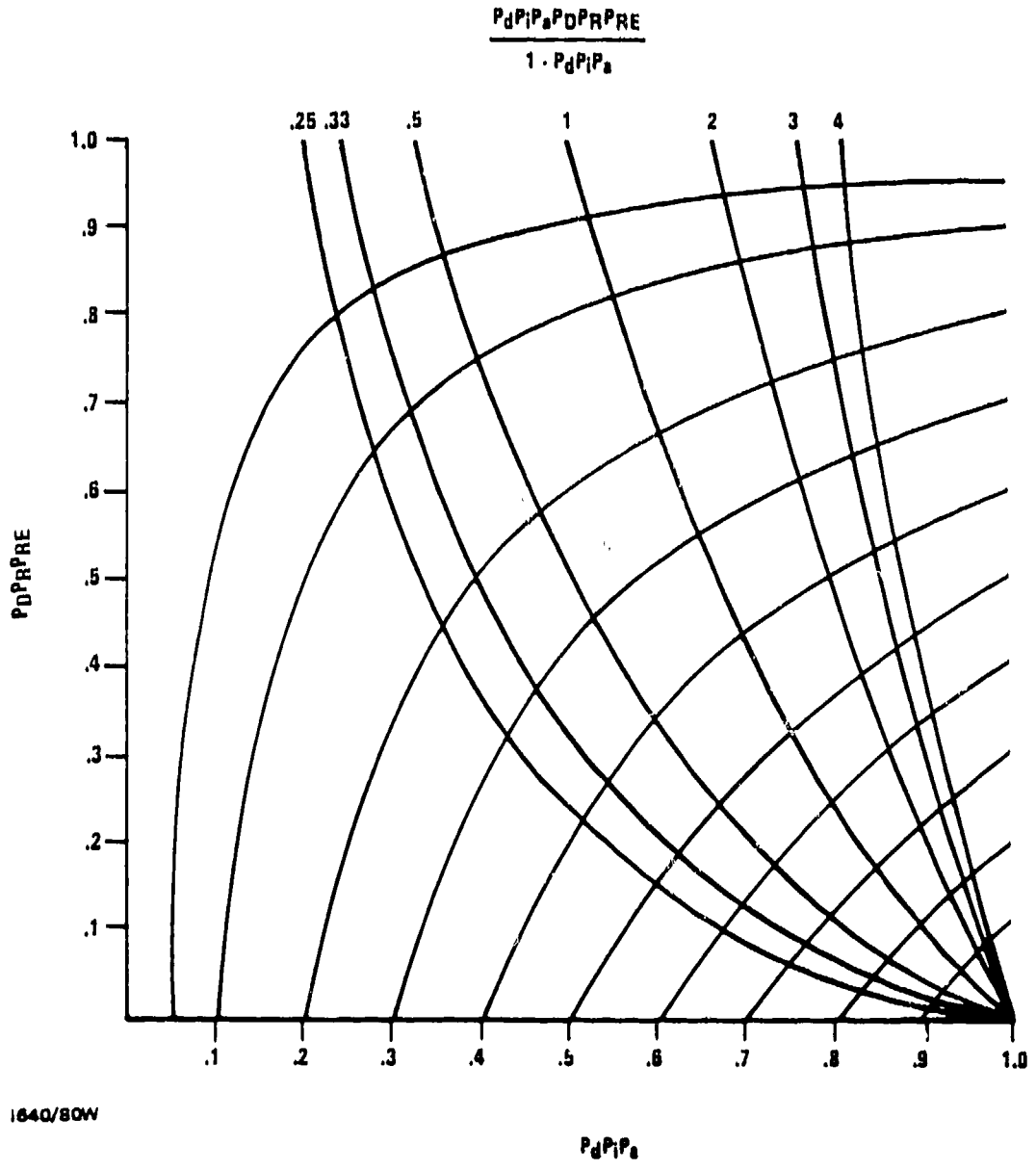

Figure 5-3. Ratio of contributions.

instances where the probabilities of detection, identification, and attack are high (say for an F4 QRA squadron at a fixed MOB in West Germany), fixes which improve the probabilities of detecting and repelling an attack produce a larger absolute increase in P_{SEC} there than they do for a more distant QRA site where $P_d P_i P_a$ would be lower.

Second, and less obviously, the parametric analysis shows that, in general, the effect on security of a fix cannot be directly inferred from the impact of the fix at the systemic level. Doubling the probability that a site security force will detect a penetration attempt, for instance, will not necessarily double the probability that the site's security will be maintained.

5-2.4 Example of Effect of Improvements.

In addition to the "top-down" view presented above, the MOE for security can also be used to examine the relative merits and effects of different improvement options in the area of security. An example of this "bottom-up" use of the security MOE follows.

The fixes being considered regarding the security of nuclear weapons, both for Army storage sites and Air Force MOBs (Main Operating Bases), include sensor devices, night vision aids, and FEDS (Forced Entry Deterrent Systems). While these improvements are designed to upgrade security at the sites in question, both in peacetime and in the event of war, in this example we will restrict attention to peacetime effects alone.

We will assume that the storage sites and MOBs under consideration have been both detected and identified as potential peacetime targets for a terrorist or special team covert attack. Accordingly, we set $P_d = P_i = 1$. Further we will assume that $P_a = 1$; i.e., that an attack will be launched against a nuclear weapon storage site somewhere at some time in the future. We do this not

because there is overwhelming evidence to indicate that this is the case (on the contrary, experience so far indicates that such an attack is unlikely), but rather because the proposed fixes are designed to help detect, respond, and repel given that an attack takes place.

The next step is to specify baseline (current) values for the remaining variables affecting security, namely P_D, P_R, and P_{RE}, in the peacetime scenario with a terrorist/covert action threat. The three improvements being considered will produce changes in one or more of these probabilities. (Note: We are going to hold $P_a = 1$ constant, so we are working under the assumption that, in peacetime at least, the fixes being considered will not have any deceptive, camouflage, or deterrent effect. This would not be the case in a wartime analysis. Night-vision aids at MOBs for instance, with the concomitant reduction in lighting requirements, may make possible blackout procedures which would result in reductions in P_d and/or P_i for airbases subject to attack in war.) To establish these baseline values we will assume that presently it is a toss-up whether a given storage site (be it Army or Air Force) would be able to maintain security in the face of an attack by a well-trained and dedicated terrorist/covert action team. That is, we will assume that right now $P_{SEC} = .5$. With $P_d P_i P_a = 1$ this assumption is equivalent to the assumption that $P_D P_R P_{RE} = .5$. While there are many ways in which this product can equal .5, we will assume that our present ability to detect, respond appropriately, and repel are all about equal, so that $P_D = P_R = P_{RE} = (.5)^{1/3} = .794$ or approximately 80%. (It is interesting to note that even with relatively high probabilities (80%) of detection, response, and repulsion, P_{SEC} comes in at the value of .5. This reflects an important characteristic of the overall MOE methodology, namely that because joint probabilities for

several factors at the systemic level are often involved, even with high estimates for the systemic MOE the model yields values for the P_{SEC}, P_{SUR}, P_{AVAIL}, and P_{EFF} which tend to be lower than they might be if estimated using other methods.)

Thus we have as a baseline estimate for peacetime security $P_{SEC} = .5$ with $P_d = P_i = P_a = 1$ and $P_D = P_R = P_{RE} = .794$. The chart below indicates those factors which can reasonably be expected to change in response to the improvements under consideration, together with estimates of what the relative (% of baseline) changes would be. (The figures in parenthesis represent the resultant values of the probabilities after the fixes.)

	P_D	P_R	P_{RE}
	(Baseline for each = .794)		
Sensor devices	+19.6% (.95)	-5.5% (.75)	NO CHANGE
Night-vision aids	+.75% (.80)	NO CHANGE	+13.4% (.90)
FEDS	NO CHANGE	+7% (.85)	+4.5% (.83)

Some justification of the estimates in the chart is in order. The function of the sensor devices is to increase the probability of detection, and .95 represents a P_D which would represent acceptable performance for a new sensor system. The net result on P_R of adding more sensors is difficult to estimate. On the one hand, additional sensors may provide more time to respond appropriately, but on the other they are very likely to increase the false alarm rate, thereby decreasing the probability of responding appropriately to a real attack or penetration attempt. Here we have assumed that the net effect of additional sensors on P_R is negative (.794 T .75). Night vision aids will have their primary effect in improving the ability of security forces to repel (by making their fire in conditions of darkness more lethal), but they should also

provide some slight improvement (.794 → .8) in detection capability. FEDS is designed primarily to either delay and/or frustrate unauthorized access to the weapons by various means. By delaying an attacking force FEDS will improve the probability of organizing an appropriate response, and to the extent that FEDS thwarts or imposes penalties on an attacking force it will also improve P_{RE}. (For example, FEDS will make physical removal or theft of weapons more difficult, if that is the goal of the attack).

With these estimates the resulting values of P_{SEC} (and % changes from P_{SEC} = .5) are as follows:

	P_{SEC}	% Change
Sensor devices	.566	+13.2%
Night-vision aids	.572	+14.4%
FEDS	.560	+12.0%

Thus, with the above assumptions, night-vision aids provide the highest payoff in security, followed by sensor devices, and then FEDS.

The compounded effects on security when combinations of improvements are applied are displayed in the next table.

	P_D	P_R	P_{RE}	P_{SEC}	% Change from P_{SEC} =
N-V aids and Sensors	.957	.75	.9	.646	+29.2%
N-V aids and FEDS	.8	.85	.941	.640	+28%
Sensors and FEDS	.95	.803	.83	.633	+26.6%
N-V aids and Sensors and FEDS	.957	.803	.941	.723	+44.6%

Thus, under the assumptions made, the improved values for P_{SEC} range from .56 (+12%) with FEDS alone to .723 (+44.6%) when all three

improvements are applied. This represents an estimate of the range of improvement which can be expected from the various fixes.

Of course, this is just an example. Similar analyses using actual test data will be an important part of the evaluation procedure as well. Also, cost-effectiveness considerations have not been included here, but with estimates for procurement and lifecycle costs in hand they are easy to obtain. They could be done in terms of cost per unit percent change from baseline, for instance. Finally, to examine the effects of these improvements in wartime the same approach can be used. All that is required is to adjust the values for P_D, P_R, P_{RE}, and P_i, P_d, P_a so that they represent reasonable estimates for the scenario in question.

5-2.5 Indications.

For peacetime, analyses along the lines described above provides a means of evaluating the effects on security of a wide variety of possible improvements together with insights into the factors affecting security and the resulting implications for improvement. For the transition and wartime scenarios it is necessary to include assessment of P_d, P_i, and P_a because in many of those scenarios these factors will no longer have baseline values uniformly equal to 1. In particular, for those situations where P_a is high, reducing P_d or P_i decreases the adverse impact that high value of P_a has on security. Reducing P_d or P_i would require that sites be relocated, move more frequently, or take on the appearance of something other than a nuclear storage site through deception and camouflage. Direct reduction in P_a is accomplished through improvements which serve to deter attacks. Such improvements would involve increasing the impregnability of the sites or making them more formidable in terms of the penalties they will impose on an attacker.

Some improvements in defensive capability have the potential for dual payoffs. If they are visible they can deter an attack as well as provide increased defensive strength, thereby reducing P_a and increasing P_D, P_R, P_{RE} simultaneously.

Finally, an additional area which should be considered is that of intelligence. An improved peacetime (or wartime, for that matter) intelligence apparatus capable of providing a probability of detection close to 1 well prior to an attack could reasonably be expected to provide a value for $P_D P_R P_{RE}$ close to 1, thereby making it possible to have a very high P_{SEC} no matter how large the probability of detection, identification, and attack are. This is reflected in the MOE for security as follows:

$$P_{SEC} = 1-P_d P_i P_a + P_d P_i P_a \ (P_D P_R P_{RE} \approx 1) \approx 1.$$

5-3 SURVIVABILITY.

Using the logic of the survivability relationships in Figure 4-4, probabilistic statements of survivability are readily available as follows:

Probability of surviving undamaged = P_{SU}.

(1) $P_{SU} = (1-P_d P_i P_t P_h)(1-P_{cd})$.

Probability of surviving with damage = P_{SD}

(2) $P_{SD} = (1-P_d P_i P_t P_h) P_{cd}(1-P_{ncd}) + P_d P_i P_t P_h \ (1-P_n)$

Probability of being neutralized = P_N

(3) $P_N = (1-P_d P_i P_t P_h) \ P_{cd} P_{ncd}(1-P_{kcd}) + P_d P_i P_t P_h P_n (1-P_k)$

Probability of being killed = P_K

(4) $P_K = (1-P_d P_i P_t P_h) P_{cd} P_{ncd} P_{kcd} + P_d P_i P_t P_h P_n P_k$

When exemplary values are substituted into the equations above, Table 5-2 is a result.

Table 5-2. Survivability calculations.*

No.	P_d	P_i	P_t	P_h	P_n	P_k	P_{cd}	P_{hcd}	P_{kcd}	P_{SU}	P_{SD}	P_N	P_K
1	.9	9	9	9	9	9	9	9	9	034	097	087	.782
2	8	8	8	8	8	8	8	8	8	118	176	141	.564
3	7	7	7	7	7	7	7	7	7	228	232	162	378
4	6	6	6	6	6	6	6	6	6	248	261	156	235
5	5	5	5	5	5	5	5	5	5	469	266	132	.33
6	4	4	4	4	4	4	4	4	4	585	249	100	366
7	3	3	3	3	3	3	3	3	3	694	218	064	028
8	2	2	2	2	2	2	2	2	2	799	161	032	008
9	.1	.1	.1	1	1	1	1	1	1	900	090	009	001
10	.91	.91	.91	7	9	7	8	9	7	095	091	244	570
11	91	91	91	.7	4	7	2	6	7	380	353	380	187
12	.80	.91	91	.7	.4	7	2	6	7	429	321	075	.175
13	.91	.91	.91	.7	4	.7	.1	6	7	427	334	072	167
14	.80	.91	.91	.7	.4	7	.1	6	7	483	300	065	.52
15	1.0	1.0	1.0	1.0	.7	.4	.10	.10	10	0	200	420	280
16	.91	.91	.91	.7	.7	.4	.10	.10	10	.427	200	225	147
17	1.0	1.0	1 0	1.0	.2	.4	10	.10	10	0	800	.20	080
18	1.0	1.0	1.0	.275	.7	.4	.10	10	.10	.652	.148	.122	378
19	.91	.91	.91	.275	.7	.4	.10	.10	.10	.714	.133	.094	.059
20	1.0	1.0	1.0	1.0	.99	.6	.6	.4	.2	0	.01	.396	594
21	.91	.91	.91	.7	.99	.6	.6	.4	2	.190	.176	.299	334
22	1.0	1.0	1.0	1.0	.3	.6	.6	.4	2	0	.700	120	.180
23	1.0	1.0	1.0	.08	.99	.6	.6	4	.2	.368	.332	.208	.092
24	.91	.91	.91	.08	.99	.6	.6	.4	.2	.376	.339	.204	.081
25	.91	.91	.91	.08	.99	.6	.5	.4	2	.47	.283	.174	.073

*Second and third digits indicate the results of manipulating numbers and <u>are</u> <u>not</u> indicative of accuracy or confidence.

1640/80W

Lines 1-9 give an appreciation for the behavior of values for P_{SU}, P_{SD}, P_N, and P_K as the component probabilities vary from .9 to .1 and are uniformly equal at each level. Line 1 shows a maximum value for P_K, line 9 a maximum for P_{SU}, line 3 a maximum for P_N, and line 5 a maximum for P_{SD}.

Line 10 has .91 in the first three columns. This value is an example from Percent of Knowledge (POK) tables which indicate the probability of force elements being targeted as a function of distance from FEBA. The exemplary case is for an artillery battery five km from the FEBA where POK is .75. Since this represents the product of $P_d P_i P_t$, its cube root may be substituted ($.91 \approx (.75)^{1/3}$). The other values on line 10 represent a theater nuclear war situation wherein the probabilities of neutralization, kill, and collateral damage are high. The resultant survivability obviously is low (.186).

Line 11 represents a possible conventional war situation wherein the probabilities of neutralization and collateral damage are low. As expected, the survivability is relatively high (.733).

5-3.1 Sensitivity to Parametric Changes

Line 12 illustrates the effect of a 12% decrease in detectibility of a force element when compared with line 11. Note that P_{SU} increases from .380 to .429 (12.89%), P_{SD} decreases from .353 to .321 (9.06%), P_N decreases from .080 to .075 (6.25%), and P_K decreases from .187 to .175 (6.42%). This effect is the same whether P_d, P_i, P_t, or P_n is decreased by 12%.

Line 13 shows the effect of decreasing the probability of collateral damage from .2 to .1. Comparison with lines 11 and 12 reveal an effect similar to that on line 12.

Line 14 combines the changes of lines 12 and 13. Note that P_{SU} increases from .380 to .483 (27.1%), P_{SD} decreases from

.353 to .300 (15.01%), P_N Decreases from .080 to .065 (18.75%), and P_K decreases from .187 to .152 (18.72%).

5-3.2 Sensitivity to Assumption of Hit.

Calculations indicate that, in an 8-inch battery 30% of battery elements survive given a hit by an attack of specified type. The assumption implied by the phrase, "given a hit", is that $P_d=P_i=P_t=P_h=1$. The values used in line 15 are consistent with both the level of survival and the implied assumption. Further assumptions are that $P_{cd}=P_{ncd}=P_{kcd}=.1$, based on discrete targeting by conventional munitions. The results of this single target, single attack analysis can be applied to the set of 8-inch batteries in the force by using values for P_d, P_i, P_t, and P_h as in line 10. Line 16 shows those results. Note that force survivability is considerably better (line 16, $P_{SU}+P_{SD}=.627$) than single unit survivability (line 15).

The same calculations indicate that the same attack on an 8-inch battery leaves 80% of the battery elements surviving when there is a target location error (TLE) of 150 meters (line 17). The probability of a hit (P_h) cannot be 1 if there is a TLE unknown to the fire planner. The effective value of P_h may be calculated from equations (1) and (2). Upon substitution:

$$.8 = (1-P_h)(1-.1)+(1-P_h)(.1)(1-.1) + P_h(1-.7)$$

$$P_h = .275$$

Using this value for P_h and $P_d=P_i=P_t=1$, the results appear on line 18. Note that $P_{SU}+P_{SD}=.8$ in both lines 17 and 18.

Line 19 shows the effect of applying these single target-single attack results to the set of 8-inch batteries in the force. Comparing lines 16 and 19 shows that 150 meter TLE increases undamaged 8-inch batteries surviving from .427 to .718 (67.2%), P_{SD} decreases from .200 to .133 (33.5%), P_N decreases from .225 to .094

(58.2%), and P_K decreases from .147 to .059 (59.9%). An important generalization may be drawn at this point: if an average TLE of 150 meters can be induced for 8-inch batteries, a major improvement in survivability is a direct result. If the enemy fire planner knows that there is a TLE, and when the target dimensions are approximately equal to the TLE, he would have to expend from nine to twelve times as much ammunition as for the no TLE case.

5-3.3 Sensitivity to Nuclear Assumptions.

Results were calculated for a nuclear strike on an 8-inch battery with no target location error (hit assumed) and with 1000 meters offset aiming point (which corresponds to 1000 meters TLE). The result is seen in line 20 for no TLE. As before, line 21 presents the result if P_d, P_i, P_t, and P_h are assigned realistic values. When applied to the set of 8-inch batteries the survivability is reasonably high ($P_{SU} + P_{SD} = 36.6\%$).

Line 22 shows the case of 1000 meters TLE with a hit assumed. Since P_h cannot be 1 with a TLE, as before, the effective value of P_h can be calculated as follows:

$$.7 = (1-P_h)(1-.6)+(1-P_h)(.6)(1-.4)+P_h(1-.99)$$

$$P_h = .08$$

Using this value for P_h and .99 for P_n values on line 23 are developed. Note that $P_{SU} + P_{SD} = .7$ on both lines 22 and 23. Again, if realistic values are assigned to P_d, P_i, and P_t and the set of 8-inch batteries is evaluated, line 24 shows the result.

Comparison of lines 21 and 24 shows the effect of nuclear attack with no TLE and with 1000 meters TLE. Note that P_{SU} increases from .190 to .376 (97.9%), P_{SD} increases from .176 to .339 (92.6%), P_N decreases from .299 to .204 (31.8%), and P_K decreases from .334 to .081 (75.75%). Again, the strong effect of induced TLE is seen.

Line 25 is intended to show the effect of reducing the probability of collateral damage from .6 (line 24) to .5. Note that P_{SU} increases from .376 to .47 (25%), P_{SD} decreases from .339 to .283 (16.5%), (providing a net change in survivors of plus 5.3%), P_N decreases from .204 to .174 (14.7%), and P_K decreases from .081 to .073 (9.9%).

5-3.4 Arbitrary Sensitivities.

If the probability values in equations (1) and (2) are allowed to take on values between zero and one (for convenience intervals of .2 were used), an extensive matrix (over 62,000 elements) of survivability probabilities may be calculated. For simplicity $P_dP_iP_tP_h$ may be taken as a single variable, reducing the matrix to the more manageable dimensions of 288 elements. This simplification is justified upon the observation that the numerical result is insensitive to which of the members of $P_dP_iP_tP_h$ is changed as the product is always used in the calculations. Some of the results of such calculations are presented in the form of graphs in the figures following. Note in Figure 5-4 the appearance of a node. For values of P_n to the right of the node, P_{SUR} increases with decreasing P_n and decreasing $P_dP_iP_tP_h$, while the opposite appears to be the case to the left of the node. The node occurs at a value of $P_n = P_{cd}P_{ncd}$ and at that point $P_{SUR} = 1-P_{cd}P_{ncd}$. In practical applications P_n is greater than $P_{cd}P_{ncd}$; however, for weapons with large radii of damage against closely spaced targets with untargeted force elements interspersed, there is a tendency toward indifference to values of $P_dP_iP_tP_h$. Large radii of damage imply large P_n which lies to the right of the figures.

5-3.5 Example of Effect of Improvements.

The relationship between systemic MOE and unit survivability can be used to evaluate the relative merits of proposed

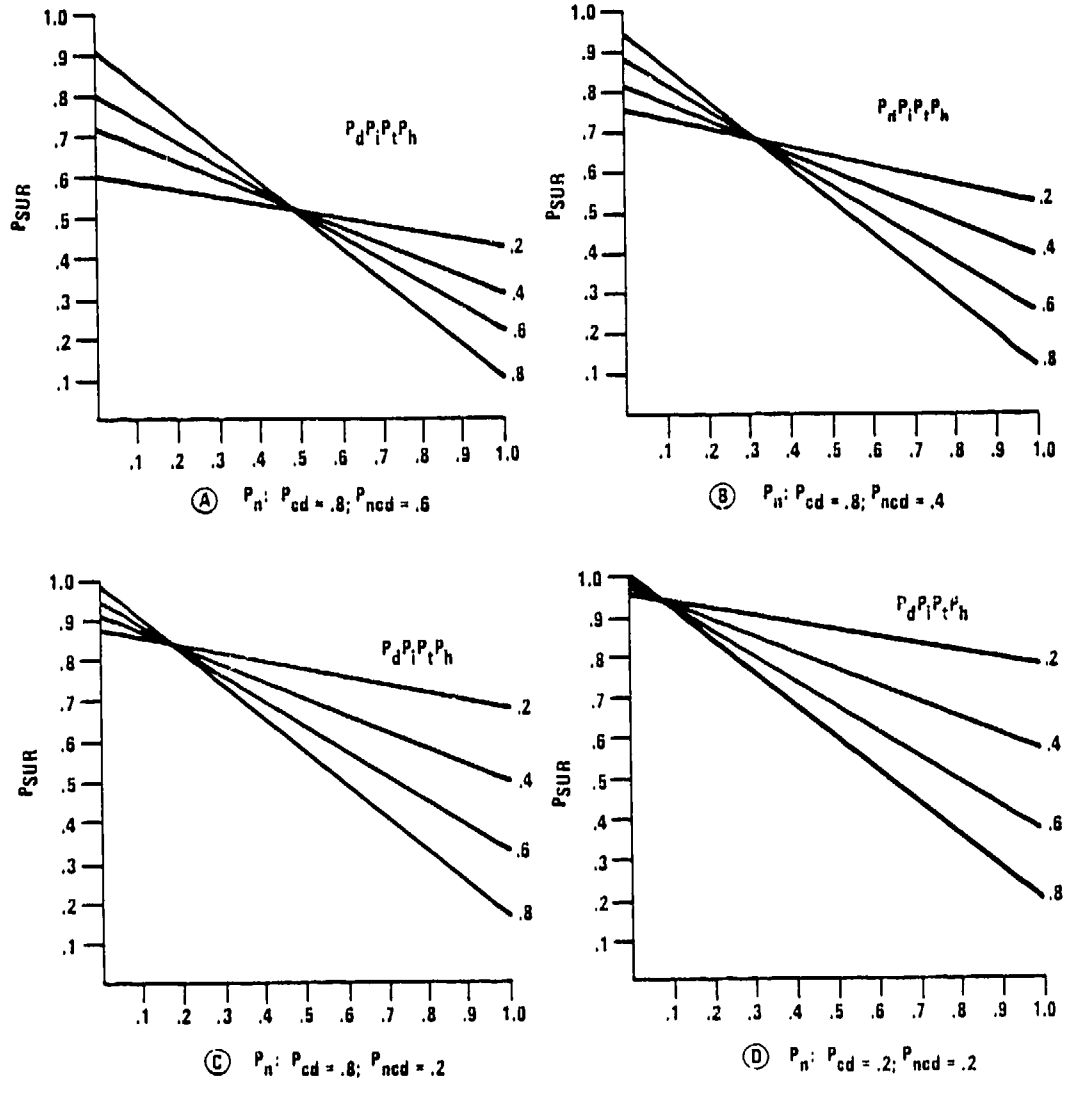

1640/80W

Figure 5-4. Sensitivity of P_{SUR} to P_n, P_{cd}, P_{ncd}.

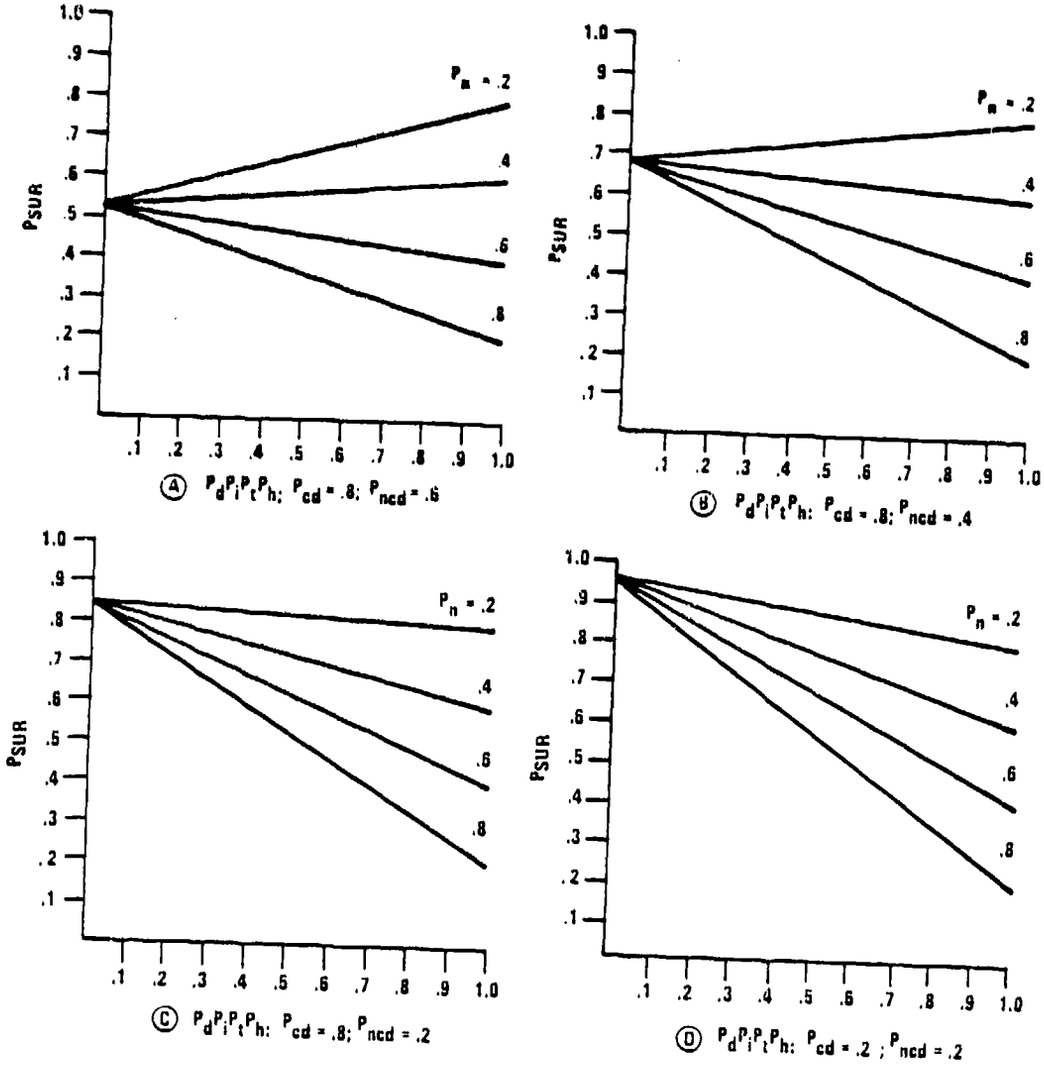

1640/80W

Figure 5-5. Sensitivity of P_{SUR} to $P_d P_i P_t P_h$, P_{cd}, P_{ncd}.

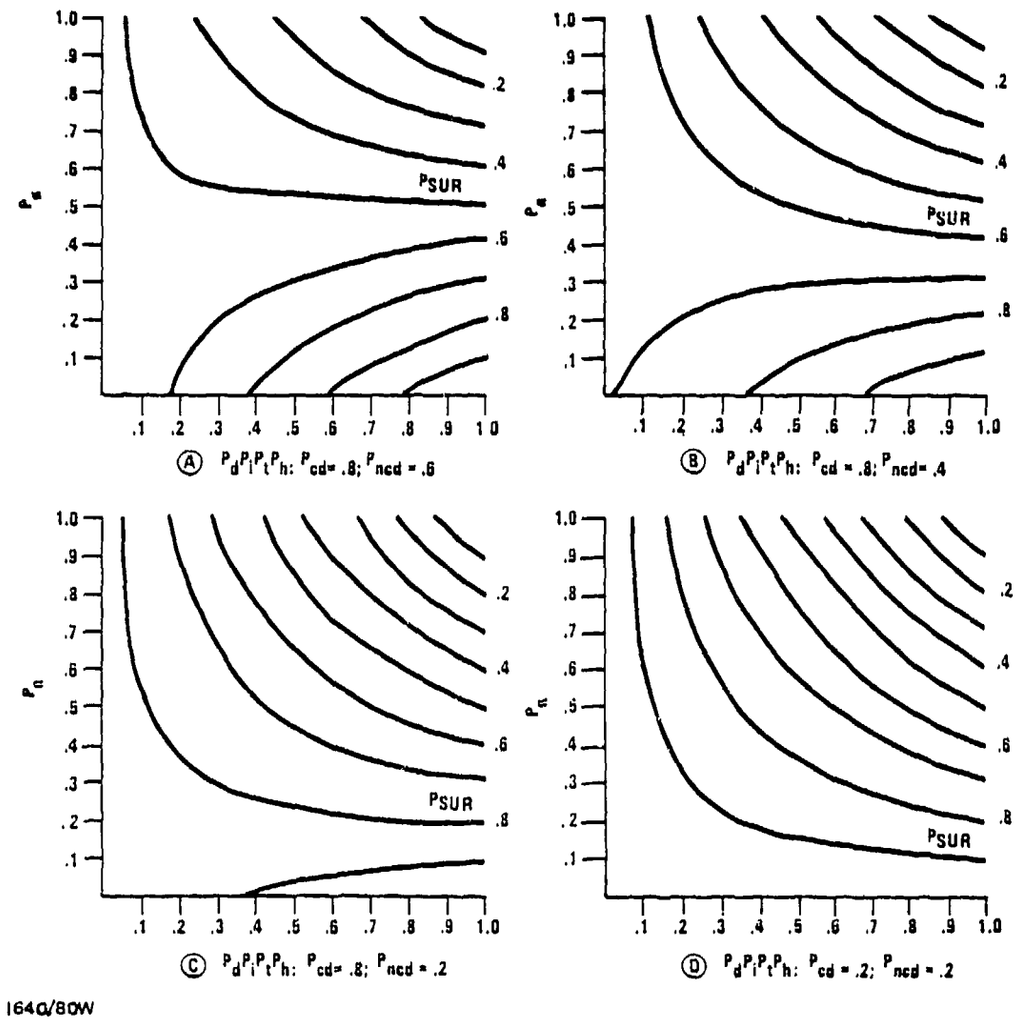

1640/80W

Figure 5-6. P_{SUR} as a function of $P_d P_i P_t P_h$, P_{cd}, P_{ncd}.

improvements to survivability using techniques similar to those discussed in the sensitivity sections above. The probability that a unit will survive is expressed:

$$P_{SUR} = P_{SU} + P_{SD} = (1 - P_{dith})(1 - P_{cd}) + (1 - P_{dith}) P_{cd} (1 - P_{ncd}) + P_{dith} (1 - P_n)$$

where P_{dith} is the notation used for the product of P_d, P_i, P_t, and P_h.

Improvements intended to increase survivability will affect one or more of the terms in this expression. For instance, a camouflage improvement will decrease P_d while hardening the system will decrease P_n and P_{ncd}. Changes in operating procedures such as increasing dispersion of units will reduce P_{cd}. In order to determine the relative merits of proposed improvements, the conditions must be known or assumed to the extent that values for all terms of the expression are available. As an example, to analyze the trade-offs between improvements in camouflage versus hardening for a particular system, the scenario or environment in which the system will operate must be considered. In a theater nuclear war situation for example, P_n, P_{cd} and P_{ncd} would be high. To determine increase in system survivability resulting from a camouflage measure which decreases P_d by 30 percent, as compared to hardening the system so as to decrease P_n and P_{ncd} by 30%, the base case values shown on line 10 of Table 5-2 are considered reasonable as an example for a theater nuclear war environment. In this case the value for P_{SUR} is 0.186. A 30 percent decrease in the probability of detecting the unit would reduce P_d to 0.637 with a resulting value for P_{SUR} of 0.214 which represents a 15 percent increase in the survivability of the system. An improvement that increased the hardening of a unit by

30 percent would reduce the values of both P_n and P_{ncd} to 0.63. In this case the resulting value of P_{SUR} would be 0.430 which represents a 130 percent increase in survivability of the system.

In order to make decisions on alternative improvements to survivability, the analysis must extend beyond comparison of values for P_{SUR}. Some fixes or operational improvements may degrade system responsiveness or effectiveness so that the total effect on force effectiveness must be considered along with the costs of each alternative. The calculation of total force effectiveness is a product of the probability of survival (P_{SUR}), availability (P_{AVAIL}), and unit effectiveness (P_{EFF}) of the system weighted by the number (n) of each system, the mission support capability (m) of each system, and the weighting factor (w) of the scenario in which the system was employed, summed over all of the component systems of the TNF. The resulting calculations are lengthy but manageable.

Cost data and the influence of alternative fixes on all systemic MOE must be determined prior to decisions on improvements. For instance, while the example 30 percent hardening fix looks attractive in terms of results, it may not be cost effective. Also, when the specific fix is studied it may be found to unfavorably influence other factors such as availability so that the resulting increase in force effectiveness is less than it originally appears.

5-3.6 Survivability Indications.

As discussed in the preceding section, one indication resulting from the survivability expression is that hardening appears to have a higher payoff in survivability than camouflage and that this result is more pronounced for theater nuclear warfare than for a conflict of lesser intensity. Another indication derived from the model is that a change in the probability of either being identified, targeted, or hit will have the same effect on survivability as a change in the probability of being detected.

5-4 AVAILABILITY.

A fundamental premise of the MOE methodology is that potential improvements to TNF systems or elements should be evaluated not only in terms of the increased survivability they provide, but also in terms of how they affect the ability of the relevant systems to perform their assigned missions. This requires that questions regarding availability and unit effectiveness be considered, because in order to perform its mission a unit must not only survive; it must also be available when needed, and it has to be effective in delivering its fire in an accurate and timely manner. In particular then, the impact of improvements on availability represents an important part of the evaluation program.

A unit or system will be unavailable if it is moving, receiving suppressive fire, out of communications, out of ammunition, or down for maintenance/repair following an attack. We will include under the heading "moving" any activity which prevents a unit or system from delivering its fire in a sufficiently timely manner. Many of the improvements being considered in the TNF S^2 program will have at least some of their impact in these areas. For instance, hardening fixes will not only improve survivability, but they will also tend to reduce the probability that a given system will be down for repair. Improved material handling devices and procedures will make loadout and movement of weapons easier and faster, thereby decreasing the probability that a unit will be unavailable for use because of ammo supply problems. On the other hand, there are some improvements in the area of security and survivability which could <u>adversely</u> affect availability. A security system which makes access, loadout, or use of weapons more complicated or time consuming (e.g., some FEDS systems perhaps) may degrade availability in that it increases the probability that the

unit is "moving" in the generalized sense defined above. In this same vein, installation and removal of protective blankets will make additional time demands on unit availability. While in general these negative effects may be slight, testing is required to see just what they will be. For instance, they could conceivably be crucial at QRA (Quick Reaction Alert) or CAS (Combat Alert Status) sites.

An example calculation of expected availability effects resulting from some of the improvements being considered for 155/203 mm artillery follows the parametric analysis for availability given below.

5-4.1 Parametric Analysis.

The discussion of availability in Chapter 4 presented a simplified expression of P_{AVAIL} as follows:

$$P_{AVAIL} = \prod_{j=1}^{5} (1 - P_j),$$

or, in its expanded form:

$$P_{AVAIL} = (1-P_{mo})(1-P_c)(1-P_s)(1-P_e)(1-P_{ma}).$$

It is immediately obvious that P_{AVAIL} is equally sensitive to a given degree of change in any of the component probabilities of nonavailability. Hence, it is highly desirable that all of the component probabilities be driven as low as possible.

Figure 5-7 illustrates sensitivity of P_{AVAIL} to values of the components. The line labeled (1) represents perfect availability for any four of the components with the fifth taking on values as shown below the horizontal axis. For example, if the fifth component is 20% nonavailability, the force is 80% available. Curve (2)

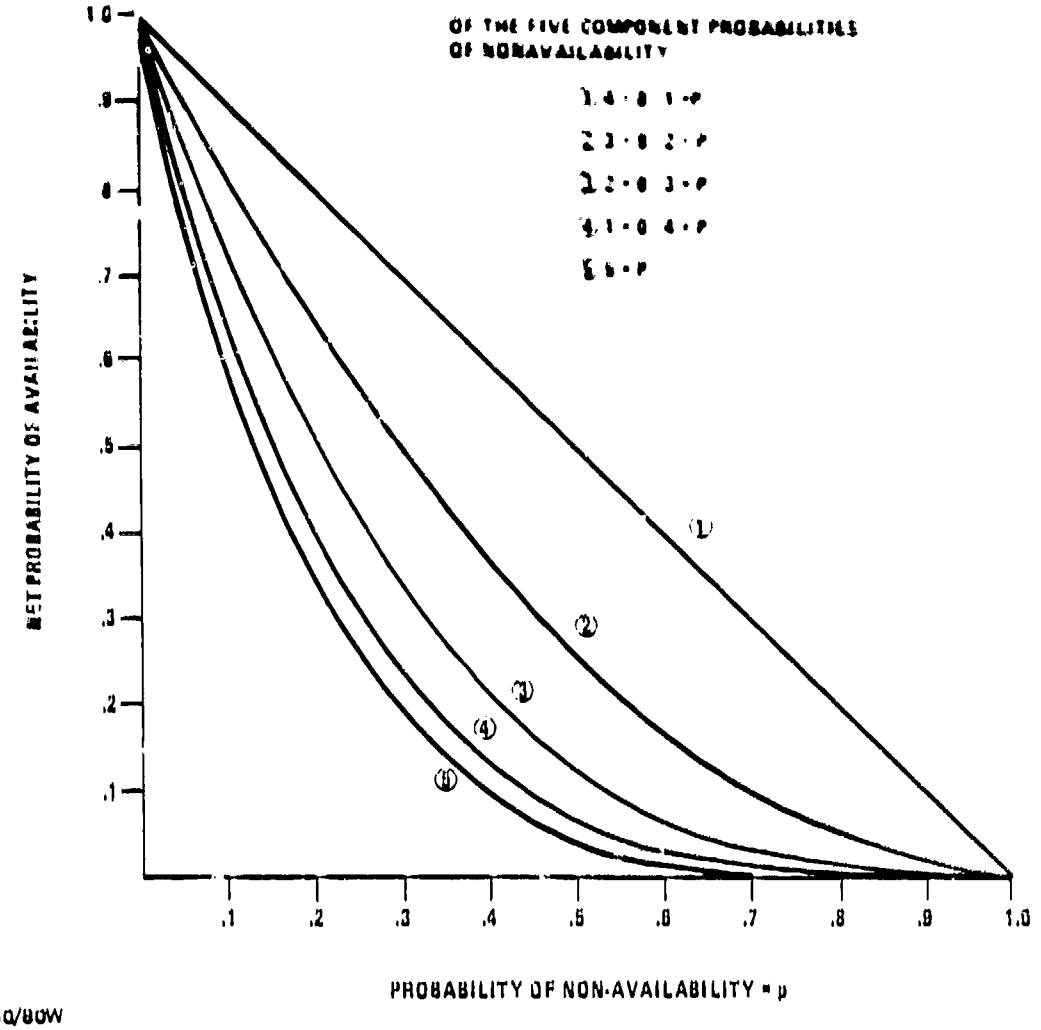

Figure 5-7. Probability of availability.

presents the case where two of the components take on values as shown. If both are 20% nonavailable, the force is 64% available, and so on. Note that curve (5) shows that if all five components are only 5% nonavailable, force availability is 77%, thus the need to minimize the probabilities of nonavailability.

5-4.2 Example of Effect of Improvements.

As an example of the use of the availability MOE in evaluating specific improvement options we will consider some possible fixes for 155/203 mm artillery. Decoys, different dispersion configurations, use of a hardened 1-1/2 ton trailer, and various communications improvements are all under consideration as means of improving the survivability of nuclear capable artillery. Some of these improvements will also improve availability.

Improved communications through additional nets, radios, and new systems, as well as improvements which decrease enemy ability to jam (e.g., burst transmission which makes detection and location, and therefore jamming, more difficult) will decrease the probability that a unit will be unavailable due to commo loss (P_c). Wider dispersion of the howitzers in a battery reduces the probability of unavailability due to repairs (P_{ma}) because they are harder to damage when the battery as a whole is the target. If movement in a dispersed battery is accomplished in steps, rather than moving the whole battery at once, the probability of unavailability due to movement (P_{mo}) is reduced. This is because a battery utilizing stepwise movement will always have at least some of its tubes in position and ready to fire. Finally the hardened 1-1/2 ton trailer has mixed effects. On the one hand it affords additional protection to the ammunition and therefore decreases the probability of ammo unavailability (P_e). On the other, however, the "unlocking" the trailer will require may degrade availability somewhat through the additional time requirement it generates.

As noted in the parametric analysis, when all five components of nonavailability are .05, the resulting availability is approximately 77%. $P_{AVAIL} = (1-.05)^5 = .7738$. If we take this as the baseline case and assume that the improvements above result in 20% reductions in P_c, P_{ma}, P_{mo}, and P_e respectively, (the probability of suppressive fire, P_s, was not affected), we obtain for availability: $P_{AVAIL} = (1-.04)^4 (1-.05) = .8069$. This represents a 4.28% increase in availability.

5-4.3 Indications.

The MOE for availability have been included in the TNF S^2 MOE framework for two reasons: first, because many of the proposed improvements should be examined for their effects on availability, and the systemic factors in P_{AVAIL} provide a vehicle for this; and second, to ensure that the MOE model, insofar as it is to be used to examine effects on the overall force, realistically recognizes the fact that the availability of systems to perform their missions when called upon to do so represents an area which must be addressed in analyzing overall force effectiveness. Given the limited quantities of nuclear weapons (in comparison to the conventional), the special procedures and communications required, the high targeting priority nuclear units are likely to receive, and the extraordinarily lethal environment in which the force will be asked to perform, this is especially true for the theater nuclear force.

5-5 UNIT EFFECTIVENESS.

From Chapter 4 the expression for unit effectiveness is:

$$P_{EFF} = P_d P_i P_t P_h P_n + (1-P_d P_i P_t P_h) P_{cd} P_{ncd}.$$

Substitution of selected values for systemic MOE in the equation resulted in Table 5-3. Lines 1-9 give an appreciation for the behavior of values of P_{EFF} as the component MOE vary from .9 to .1 and are uniformly equal at each level.

Table 5-3. Unit effectiveness.*

	No.	P_d	P_i	P_t	P_h	P_n	P_{cd}	P_{ncd}	P_{EFF}
	1	.9	.9	.9	.9	.9	.9	.9	.869
	2	.8	.8	.8	.8	.8	.8	.8	.705
	3	.7	.7	.7	.7	.7	.7	.7	.540
	4	.6	.6	.6	.6	.6	.6	.6	.391
	5	.5	.5	.5	.5	.5	.5	.5	.265
	6	.4	.4	.4	.4	.4	.4	.4	.166
	7	.3	.3	.3	.3	.3	.3	.3	.092
	8	.2	.2	.2	.2	.2	.2	.2	.040
	9	.1	.1	.1	.1	.1	.1	.1	.010
CONV	10	.91	.91	.91	.7	.7	.1	.1	.374
150M TLE	11	.91	.91	.91	.275	.7	.1	.1	.153
Imp Accuracy	12	.91	.91	.91	.9	.7	.1	.1	.478
Imp Lethality	13	.91	.91	.91	.7	.8	.1	.1	.427
Nuclear	14	.91	.91	.91	.9	.99	.6	.4	.749
1000M TLE	15	.91	.91	.91	.08	.99	.6	.4	.285
	16	.91	.91	.91	.9	.8	.6	.4	.620
+ 10% P_d	17	1.0	.91	.91	.9	.8	.6	.4	.657
+ 10% P_h	18	.91	.91	.91	.99	.8	.6	.4	.658
+ 10% P_n	19	.91	.91	.91	.9	.88	.6	.4	.674
+ 10% P_{cd}	20	.91	.91	.91	.9	.8	.66	.4	.628
+ 10% P_{ncd}	21	.91	.91	.91	.9	.8	.6	.44	.628
+ 10% 5 above	22	1.0	.91	.91	.99	.88	.66	.44	.774

*Second and third digits indicate the result of manipulating numbers and <u>are</u> <u>not</u> indicative of accuracy or confidence.

1640/80W

5-5.1 Conventional War Scenario.

Line 10 has values for $P_d P_i P_t$ derived from POK tables that indicate 75% probability of targeting a medium artillery battery located within five km of the FEBA $[(.75)^{1/3} = .91]$. The value of .7 for P_h includes the probability that the target remains in position until the mission is fired or the sortie is flown. (The value of .7 for P_n is typical of heavy counter battery fire for neutralization). The values for P_{cd} and P_{ncd} were assumed to be low due to use of conventional munitions. The value of .374 for P_{EFF} represents the probability that a single attack neutralizes a single target.

If there is a target location error of 150 meters, P_h is reduced to .275 and P_{EFF} is reduced to .153, a decrease of 59% (line 11).

Line 12 shows the result of improving accuracy and timeliness so that P_h is increased from .7 to .9. The improvement in effectiveness over line 10 is 27.8%.

Line 13 shows the result of improving lethality of ammunition so that P_n increases from .7 to .8. The increase in P_{EFF} over line 10 is 14.2%.

5-5.2 Nuclear Scenario.

Line 14 is a nuclear scenario wherein a medium yield weapon is accurately delivered over the target center. Line 15 shows the impact of a TLE of 1000 meters (P_h = .08). Note the decrease in effectiveness from .749 to .285 (61.9%).

Line 16 is another nuclear scenario with a low yield weapon delivered accurately over the target center. The lines following show the results of increasing each of the component values by 10% of its base value used on line 16.

5.5.3 Parametric Changes.

Line 17 increased P_d by 10% to increase P_{EFF} by 6.03%. The effect would be the same if P_i and P_t were each changed individually by 10%.

Line 18 increased P_h by 10% to increase P_{EFF} by 6.13%
Line 19 increased P_n by 10% to increase P_{EFF} by 8.71%
Line 20 increased P_{cd} by 10% to increase P_{EFF} by 1.29%
Line 21 increased P_{ncd} by 10% to increase P_{EFF} by 1.29%
Line 22 increased P_d, P_h, P_n, P_{cd}, and P_{ncd} by 10% to increase P_{EFF} by 24.8%.

It is readily seen that, for these high values, P_{EFF} is most sensitive to changes in P_n, followed by P_h, (P_d, P_i, P_t), and P_{cd}, P_{ncd}, and that the synergism of several changes is strong.

5-5.4 Example.

The systemic factors relating to unit effectiveness refer to the ability of the unit to detect, identify, target, hit, and neutralize enemy targets. TNF S^2 improvement options, however, are designed to improve security and survivability; they are not specifically designed to improve any of these offensive capabilities. Nevertheless, because we are interested in examining the impact improvements will have on overall force effectiveness, it is important to examine what effects, if any, various S^2 fixes are likely to have in these areas. Also, of course, knowledge of the effectiveness or usefulness of the various weapons systems which comprise the TNF can aid in determining which systems should get the fixes if choices have to be made. For example, if the Nike-Hercules and ADM weapon systems are not as effective in performing their missions as are the Pershing and 155/203 mm artillery systems, then the latter

should have priority for survivability improvements. (More along these lines is addressed in the next chapter which includes an analysis of the relative contributions made by the various TNF weapon systems across a range of scenarios.) Another reason for including unit effectiveness MOE in the overall TNF S^2 MOE framework arises in connection with some of the longer term aspects of the TNF S^2 program. The impact that the introduction of new and/or improved weapons systems will have on TNF security, survivability, availability, and unit effectiveness, if not of immediate concern, will certainly grow in importance as these new systems get closer to being deployable. And it is precisely in the offensive effectiveness factors listed above where these new weapon systems will have their primary effect.

All of this notwithstanding, some of the present S^2 improvement options are likely to have some mpact on unit effectiveness. Improvements in communications and data processing will improve the ability of TNF systems to acquire and hit targets. On the other hand, dispersion within 155/203 mm batteries for survivability purposes will make orientation of the battery ("laying the weapons") and security more difficult and therefore may degrade unit effectiveness by reducing the probabilities of hit (P_h) and/or neutralization (P_n).

Taking line 10 in Table 5-3 as a set of baseline values for an artillery battery in a conventional scenario, if we assume an increase in $P_d P_i P_t P_h$ from .527 to .554 (+ 5%) as a result of commo and data processing improvements, and a decrease in P_n from .7 to .665 (- 5%) as a result of intra-battery dispersion, (which requires more effort to mass fires) we obtain a new effectiveness measure for the battery of P_{EFF} = .373 which represents a (very slight) decrease from the baseline unit effectiveness probability of .374. This example demonstrates the importance of examining the tradeoffs which

arise from improvements in the areas of security, survivability, availability, and unit effectiveness, because at the force level these improvements may have negative or negligible impact and therefore may not be worthwhile.

5-5.4 Indications.

It is obvious that all of the systemic MOE contribute directly to unit effectiveness and that maximizing these MOE also maximizes unit effectiveness. The sensitivity of P_{EFF} to changing the value of any systemic MOE depends upon the baseline value of that MOE. If the baseline value of a systemic MOE is significantly different from baseline values of other MOE, changes in the divergent MOE make significant changes in P_{EFF}. For values of the product, $P_d P_i P_t P_h$, above .5, P_n is the dominant MOE; for values below .5 the $P_{cd} P_{ncd}$ product dominates.

SECTION 6
RELATIVE CONTRIBUTIONS

6.1 RELATIVE CONTRIBUTIONS OF THE TNF SYSTEMS.

The MOE methodology developed and discussed in preceding sections provides a useful tool for analyzing the contribution of particular TNF systems to the fulfillment of overall NATO operational requirements. The factors of survivability, availability, and unit effectiveness can be considered over the range of scenarios in which the systems may be expected to operate, and various aspects of the TNF can then be investigated. Of particular interest is the sensitivity of fulfillment of NATO operational requirements to the survivability of particular TNF weapon systems.

Table 6-1 illustrates the application of the MOE methodology to highlight the contribution of each TNF system to the overall NATO mission. The range of scenarios considered included a) a demonstration or small selective first use of theater nuclear weapons, b) use of TNF against second echelon and interdiction targets, c) use of TNF in battlefield support, d) a conflict which has reached the point of general nuclear release, and e) nuclear defense against a large scale Soviet air offensive operation. The principal TNF systems employed will vary with each scenario as will the values of functional MOE for the survivability, availability and effectiveness of each system. The values used in Table 6-1 are considered reasonable based on the sensitivity analyses discussed in previous sections. More precise values may be obtained through test programs or other sources. <u>It should be noted that this is purely an exemplary analysis</u>. The assumptions appearing on Table 6-1 clearly drive the results. Other assumptions would produce other results.

The force effectiveness, $E_{F_{ij}}$, was calculated for each system, j, for each scenario, i, in which that system would be

Table 6-1. Relative Contributio

RELATIVE CONTRIBUTION OF TNF S

SCENARIO	SCENARIO WEIGHT	400						1500						6 INCH						LARGE					
		200 1 KT 5 KT						1500 1 KT 2 KT						1500 1 KT 2 KT						700 10 KT 50 KT					
		PSUR	PAVAIL	P_{EFF}	nm	E_F	WEIGHTED E_F	PSUR	PAVAIL	P_{EFF}	nm	E_F	WEIGHTED E_F	PSUR	PAVAIL	P_{EFF}	nm	E_F	WEIGHTED E_F	PSUR	PAVAIL	P_{EFF}	nm	E_F	WEI
DEMONSTRATION/ SELECTIVE TNF USE (SOVIET CONV USE)	.05																								
TNF AGAINST 2ND ECHELON & INTERDICTION (SOVIET TNF USE)	.25																			200	50	60	10,000 36(5)(10) 36(5)(50) (360)	640 (21.6)	1 (5
TNF IN BATTLEFIELD SUPPORT (SOVIET TNF USE)	.40	500	50	1.0	30 5(5) 5(5) (10)	7.5 (1)	3.0 (.4)	.400	50	60	900 (600)	108 (72)	43.2 (28.8)	.300	.50	60	900 (600)	81.0 (54)	32.4 (21.6)	200	50	55	3600 (360)	198 (19.8)	7 (7
GENERAL NUCLEAR RELEASE (SOVIET TNF USE)	.20	500	40	90	30 (10)	5.4 (.36)	1.08 (.07)	.400	40	50	900 (600)	72 (48)	14.4 (9.6)	.300	40	50	900 (600)	54 (36)	10.8 (7.2)	200	.40	50	10,000 (360)	432 (14.4)	8 (2
NUCLEAR AIR DEFENSE (SOVIET CONV. USE)	.10																								
WEIGHTED $\sum_{ij} W_j E_{F_{ij}}$ KT/2HR (TGT/2HR)							4.1 (.47)						57.6 (38.4)						13.2 (26.8)						.21 (16.
*WEIGHTED $\frac{E_{F_j}}{E_F}$ (%)							10 (.42)						5.73 (14.19)						4.30 (25.65)						12 (14

*THE VALUES SHOWN ARE IDENTICAL TO THE PERCENT INCREASE IN TOTAL DATO FORCE EFFECTIVENESS THAT WOULD RESU
**CHANGING SCENARIO WEIGHTING WILL CHANGE E_{F_i}

ASSUMPTIONS

- THE NUMBER OF WARHEADS FOR EACH SYSTEM (SHOWN IN LOWER LEFT CORNER OF SYSTEM TITLE BLOCK) ARE UNCLASSI
- WARHEAD YIELDS ASSUMED ARE FROM HYPOTHETIC, * DATA IN FM-101-31-3.
- FOR ALL SYSTEMS WITH MULTIPLE YIELDS, AN EQUAL DISTRIBUTION OF SELECTION FOR EMPLOYMENT WAS USED.
- THE 155MM AND 8 INCH FORCE CAN EACH DELIVER 600 FAPS IN A 2 HOUR PERIOD.
- QUANTITIES OF OTHER DELIVERY SYSTEMS ARE FROM THE ARTICLE BY "JUSTIN GALEN" IN ARMED FORCES JOURNAL, DEC 100 PERSHING, 72 LANCE, 355 DUAL CAPABLE AIRCRAFT.
- DCA CAN DELIVER 360 SORTIES IN 2HR TIME PERIOD.
- RESULTS IN PARENTHESIS INDICATE EFFECTIVENESS IN TERMS OF TARGETS NEUTRALIZED PER 2 HOUR PERIOD BASED ON A NUCLEAR WEAPON WILL, ON THE AVERAGE, NEUTRALIZE ITS TARGET

1640/80W

e 6-1. Relative Contributions (kt/2hr and Target Attack Rate).

RELATIVE CONTRIBUTION OF TNF SYSTEMS

GIRCH				LANCE 700 - 10 KT 50 KT						PERSHING 300 - 10 KT 50 KT 100 KT						DUAL CAPABLE AIRCRAFT 1900 - 3 KT 10 KT 100 KT						NIKE HERCULES 500 - 2 KT						E_p, KT/2HR (TGT/2HR)	WEIGHTED ΔE_p, KT/2HR (TGT/2HR)
	nm	E_p	WEIGHTED E_p	PSUR	PAVAIL	P_{EFF}	nm	E_p	WEIGHTED E_p	PSUR	PAVAIL	P_{EFF}	nm	E_p	WEIGHTED E_p	PSUR	PAVAIL	P_{EFF}	nm	E_p	WEIGHTED E_p	PSUR	PAVAIL	P_{EFF}	nm	E_p	WEIGHTED E_p		
										.733	.80	.75	1,600 10(10) 10(50) 10(100) (30)	703.7 (13.2)	35.2 (.66)													703.7 (13.2)	35.2 (.66)
				200	.50	.60	10,800 36(5)(10) 36(5)(50) (360)	648 (21.6)	162 (5.4)	.186	.68	.75	9,600 60(10) 60(50) 60(100) (180)	883.5 (15.1)	200.8 (3.77)	.150	.58	.68	13,218 110(3) 117(10) 117(100) (350)	504.81 (15.75)	148.7 (3.94)							2046.3 (52.45)	511.6 (13.11)
	900 (600)	81.0 (54)	32.4 (21.6)	200	.50	.55	3600 (360)	198 (19.8)	79.2 (7.9)																			394.6 (149.0)	157.8 (59.7)
	900 (600)	54 (36)	10.8 (7.2)	200	.40	.50	10,800 (360)	432 (14.4)	86.4 (2.88)	.186	.40	.60	9,600 (180)	428.5 (8.04)	85.7 (1.6)	.150	.35	.50	13,218 (350)	348.97 (9.19)	69.38 (1.84)	.250	.50	.65	1000 (500)	81.3 (40.6)	16.3 (8.13)	1420.2 (156.50)	284.1 (31.32)
																						.350	.65	.75	1000 (500)	170.6 (85.3)	17.1 (8.5)	170.6 (85.3)	17.1 (8.5)
			13.2 (28.8)						27.6 (16.18)						121.8 (9.03)						218.1 (5.78)						13.4 (16.63)		TOTAL 1005.8 (112.28)
			4.30 (25.66)						12.57 (14.41)						12.00 (5.37)						21.68 (5.16)						3.32 (14.81)		100%

HE PERCENT INCREASE IN TOTAL NATO FORCE EFFECTIVENESS THAT WOULD RESULT FROM A 100% INCREASE IN THE SUVIVABILITY OF THAT SYSTEM
ANGE E_p,

SYSTEM (SHOWN IN LOWER LEFT CORNER OF SYSTEM TITLE BLOCK) ARE UNCLASSIFIED ESTIMATES FROM THE CENTER FOR DEFENSE INFORMATION.
HYPOTHETICAL DATA IN FM-101-31-3.
, AN EQUAL DISTRIBUTION OF SELECTION FOR EMPLOYMENT WAS USED.
DELIVER 600 AFAPS IN A 2 HOUR PERIOD.
ARE FROM THE ARTICLE BY "JUSTIN GALEN" IN ARMED FORCES JOURNAL, DEC. 77 - JAN 78
ABLE AIRCRAFT.
TIME PERIOD.
TIVENESS IN TERMS OF TARGETS NEUTRALIZED PER 2-HOUR PERIOD, BASED ON THE ASSUMPTION (GENERALLY SUBSTANTIATED BY WARGAMING RESULTS)
NEUTRALIZE ITS TARGET

employed. There are several ways in which effectiveness of the force can be measured and expressed, two of which are shown in Table 6-1. One method is to indicate force effectiveness in terms of kilotons delivered on the enemy in a period of time. The results for system force effectiveness, total TNF force effectiveness for a particular scenario, and overall NATO TNF force effectiveness shown are expressed in kilotons delivered over a two hour employment interval. Although this measure is of interest and is particularly useful for conventional firepower, wargaming results indicate that for nuclear weapons it may be misleading since a nuclear weapon of any yield over 1 kiloton will usually neutralize one company-sized target or other area target with a radius of approximately 500 meters. Larger yields may provide some additional bonus damage but, particularly if the enemy is using tactics for a nuclear environment, one nuclear weapon can be expected to neutralize only the target against which it was employed. For this reason a more useful measure of force effectiveness may be the number of nuclear weapons delivered in a particular time interval. This quantity is shown in parenthesis in Table 6-1 in terms of weapons per two hour employment interval.

Since a number of likely scenarios exist for employment of theater nuclear weapons to assist in accomplishment of the overall NATO mission, the technique of weighting the principal scenarios was used to determine the overall TNF force effectiveness. The weights assigned to each scenario are estimates of the relative value of TNF use in that scenario to the overall NATO mission. Multiplication of each system's force effectiveness by these factors enables the contribution of each TNF system over all scenarios to the total NATO mission to be determined. This is expressed in Table 6-1 as E_{F_j}/E_F.

Where:

E_{F_j} = force effectiveness of system j over all scenarios

$$= \sum_i w_i E_{F_{ij}}$$

and E_F = total force effectiveness of all TNF systems in all scenarios

$$= \sum_{ij} w_i E_{F_{ij}}$$

To determine the relative contributions of individual TNF systems to the overall NATO mission, an even more meaningful criterion than total yields or warheads delivered may be the target area covered with the desired nuclear effects. For the weapons and scenarios of interest in NATO, the expected lethal area for immediate transient casualties to personnel in tanks may be the most appropriate common measure of force effectiveness. Table 6-2 was constructed using this criterion and the same values for the functional MOE as used for Table 6-1. Since this criterion is not appropriate as a relative measure for ADM or the Nike Hercules, these systems are excluded from Table 6-2 along with the nuclear air defense scenario. The remaining scenarios were weighted as shown and the relative contribution of each system computed as a percentage of the total lethal area. It should be emphasized that these results are based on unclassified estimates of nuclear delivery systems and values for the functional MOE for survivability, availability and unit effectiveness. These results can be refined as more accurate values for the factors involved become available.

Table 6-2. Relative contributions (lethal area).

SCENARIO i	** SCENARIO WEIGHT	155 mm WEIGHTED E_f ($Km^2/2\ hr$)	8 INCH WEIGHTED E_f ($Km^2/2\ hr$)	LANCE WEIGHTED E_f ($Km^2/2\ hr$)	PERSHING WEIGHTED E_f ($Km^2/2\ hr$)	DUAL CAPABLE AIRCRAFT WEIGHTED E_f ($Km^2/2\ hr$)	** WEIGHTED $w_i E_{F_i}$ ($Km^2/2\ hr$)
DEMONSTRATION/ SELECTIVE TNF USE (SOVIET CONV. USE)	.05	–	–	–	2.22	–	2.22
TNF AGAINST 2nd ECHELON & INTERDICTION (SOVIET TNF USE)	.30	–	–	19.55	15.18	12.76	47.49
TNF IN BATTLEFIELD SUPPORT (SOVIET TNF USE)	.45	29.50	22.13	22.32	–	–	73.95
GENERAL NUCLEAR RELEASE (SOVIET TNF USE)	.20	8.74	6.56	8.69	5.4	4.96	34.35
WEIGHTED $\frac{E_{F_i}}{E_F}$ %		24.20	18.16	32.00	14.43	11.21	TOTAL 158.01 $Km^2/2hr$

** CHANGING SCENARIO WEIGHTING WILL CHANGE E_{F_i}

K40/80W

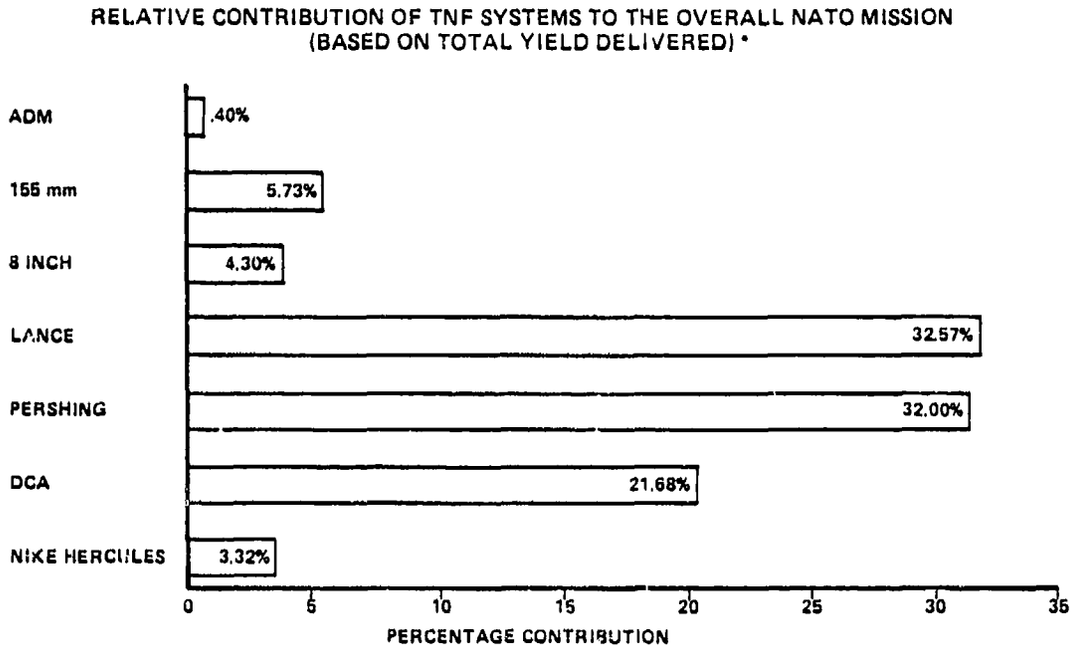

* RESULTS ARE DRIVEN BY WEIGHTING ASSUMPTIONS IN TABLES 6-1 AND 6-2

1640/80W

Figure 6-1. Relative contributions (kt/2hr).

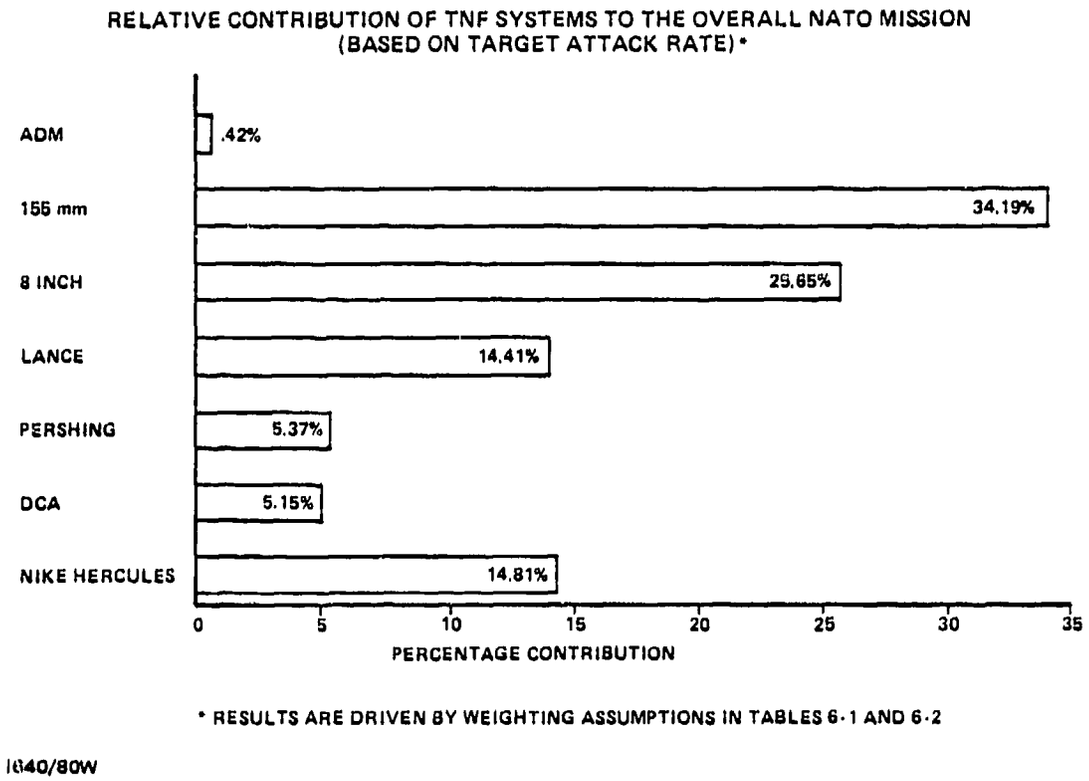

Figure 6-2. Relative contributions (target attack rate).

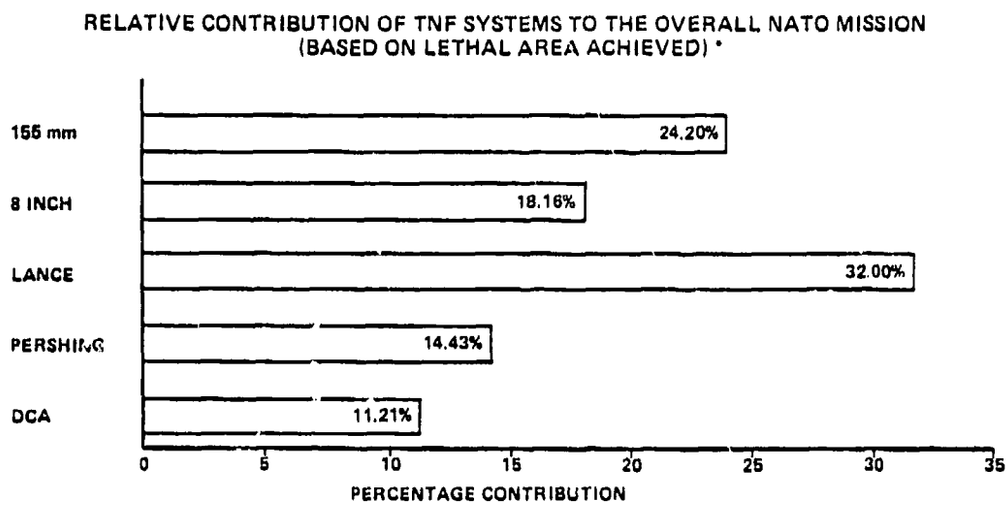

* RESULTS ARE DRIVEN BY WEIGHTING ASSUMPTIONS IN TABLES 6-1 AND 6-2

1640/80W

Figure 6-3. Relative contributions (lethal area).

6-2 SENSITIVITY ANALYSIS: INFLUENCE OF SYSTEM SURVIVABILITY ON FORCE EFFECTIVENESS.

An indication of the influence of system survivability improvements on overall force effectiveness is readily available from Tables 6-1 and 6-2. A given percentage system improvement has the greatest impact when that improvement is applied to the system already contributing the most to overall force effectiveness. The weighted values for E_{F_j}/E_F are the base measure of this contribution. These values appear in Figures 6-1, 6-2, and 6-3 using as arguments yields, warheads delivered, and lethal area covered respectively. This value for each system therefore is related to the increase in overall accomplishment of the NATO TNF mission that would result if the survivability of that system were improved by a given factor for all scenarios. Of course the contribution resulting from improvements in survivability to any other extent can be readily calculated. It should be noted that a single fix will probably not provide the same increase in survivability for a particular system in all scenarios. The variations in survivability improvements for different scenarios can be accommodated by assigning values of P_{SUR} appropriate to each scenario. The results of the analysis show the relative contributions of particular TNF systems over the range of operational realistic NATO scenarios and indicate the degree of influence of the survivability of each TNF weapon system on the fulfillment of NATO operational requirements. Table 6-3 shows the relative ranking of particular TNF systems in terms of their contributions to accomplishment of the overall NATO mission for each of the three criteria discussed above. This type of comparison is useful for identifying systems which contribute the most

Table 6-3. Relative ranks.

	DATA FROM FIGURE		
	6-1 (Kt/2hr)	6-2 (Tgt/2hr)	6-3 (L.A./2hr)
155 mm	4	1	2
8 INCH	5	2	3
LANCE	1	4	1
PERSHING	2	5	4
DCA	3	6	5
NIKE HERCULES	6	3	–
ADM	7	7	–

1640/80W

and least, and therefore for prioritizing tests of proposed improvements to TNF systems. It should be emphasized again that the preceeding analysis is presented solely to depict potential use of the methodology and should not be construed as a factual representation.

SECTION 7
CONCLUSIONS

7-1 GENERAL CONCLUSIONS.

The MOE framework and methodology described in this report has been formulated in recognition of a fact of fundamental importance in the TNF S^2 evaluation effort. This is that assessment of survivability and security improvements and system contributions must include evaluation of effects on availability and unit effectiveness, so that the impact on overall force effectiveness may be measured. With this in mind an important general conclusion of this report is that some proposed changes may in fact decrease availability and/or unit effectiveness and that tests and evaluations of these changes must recognize this possibility and allow for measurement in these areas.

The MOE methodology and framework as described herein is sufficiently general to accommodate wide application. First, it is applicable to all of the weapon systems in the TNF. Second, it allows for the use of several different kinds of measures of force contribution to total mission support. The ones identified in Chapter 6 include kilotons or yield on target per unit time, target attack rates, and lethal area coverage per unit time. Additional measures can also be used in the model. The only requirement is that they be measures which the TNF weapon systems being compared have in common. Third, the methodology, through adjustment in scenario weighting factors, can accommodate the development and/or specification of different use criteria for TNF systems. For instance, if TNF use criteria are such that general use of the force occurs only under the most extreme circumstances, then that scenario

may be given less weight and the limited and selected use scenarios more. Of course, different criteria for the use of TNF weapon systems will also affect the functional MOE of security, survivability, availability and unit effectiveness. For example, the security and survivability of a system which is "held back", so to speak, will decay with time. Fourth, the methodology already incorporates those factors which will be of interest as new weapons and systems come into the force, so the framework as it stands will be useful in the future and will not go out of date.

Finally the methodology provides a means of determining those areas where maximal results may be achieved. For example, based on the assumptions which were made for the purposes of exercising the model, tube artillery and the Lance missile systems are likely to be the systems where survivability improvements will have the greatest payoff in overall force effectiveness.

7-2 SPECIFIC INDICATIONS.

The sensitivity of security to changes in particular factors which affect security, such as the ability to detect an attack, depend on the initial values for all factors affecting security.

The effect on security of an improvement cannot be directly inferred from the impact of the fix at the systemic level. Doubling the probability that a penetration attempt will be detected does not necessarily double the probability that the site's security will be maintained.

Some improvements in security have the potential for dual payoffs in that if they are evident they can help to deter an attack as well as to provide defensive strength in the event of an attack.

An improved intelligence apparatus capable of providing high probability of detection prior to an attack could reasonably be expected to result in a high value for the probability of security.

In a theater nuclear environment, improved system hardening will result in much greater survivability than the same degree of improvement in camouflage.

In order to make decisions on alternative improvements to survivability, the analysis must extend beyond survivability to considerations such as the effects on unit availability and effectiveness, and obviously must include cost considerations.

A change in the probability that a unit will be identified, targeted, or hit will have the same effect on survivability as a change in the probability of being detected.

Improvements in TNF support systems or operational concepts which preclude nonavailability of TNF systems related to communications, movement, ammunition supply, suppressive fires, or unscheduled maintenance will have the same effect on overall force effectiveness as improvements to the same degree in survivability.

To the extent that control measures can reduce or mask the unit activity information available to enemy surveillance systems, the longer the exposure time may be, thus increasing both unit survivability and unit availability for its primary mission.

If a relatively small target location error (on the order of 150 meters) can be induced for tube artillery batteries, a major improvement in survivability is a direct result. Analysis of other systems should point to similar areas for improvement.

Tradeoffs must be examined arising from improvements in the areas of security, survivability, availability and unit effectiveness because at the force level some proposed changes may have negative or negligible impact.

7-3 FURTHER DEVELOPMENT.

This report contains a description of the MOE framework together with examples of how it can be interpreted and used. When

viewed in conjunction with other TNF S^2 programs and efforts, the next stage in MOE development and use becomes clear. For this section some of these directions for further development are discussed.

An important part of the FY79 effort will be the development of Issue Evaluation Plans (IEPs) to address the issues and potential improvements which have been identified. MOE will play an important role in the formulation of IEPs. The interface required between the MOE analytical assessment effort and the IEPs will require development and application of the MOE framework in three related areas.

First, the systemic and functional MOE which are relevant to the issues and improvements under consideration will be identified.

Second, once the systemic and functional MOE of interest have been identified, appropriate process MOE will be defined or specified. Here appropriate process MOE refer to those MOE which are measurable in tests <u>and</u> which can be used to determine values for the systemic probabilities in the MOE framework.

Finally, determination of systemic probabilities will be made based on the process MOE data gathered. This will represent a larger amount of the work than might be expected. This last statement is based on an observation made during the course of the present work. In those cases where relevant process data were available, it was found that the conversion of that data to estimates for systemic probabilities was a difficult, subtle, and as a result, a time consuming task. Development of the framework and methodology must include complete statements of MOE and related factors, determination of reasonable ranges of values for unknown probabilities

(some through early tests, others from literature search), completion of a systems data base, identification of existing software compatible with the basic MOE logic, development of executive management software compatible with selected operating software, and demonstration of capability.

After this capability demonstration an analytical device will be ready for use in conjunction with planning, operating, and assessing the results of operational tests and evaluations, all of these pointing toward assessing the relative worth of each possible TNF improvement.

APPENDIX A
DATA BASE

A-1 PURPOSE OF DATA BASE.

A data base was constructed consisting of partial descriptions of TNF weapons, storage sites, delivery systems, and delivery units. The information was compiled in a working file designated "MOE Data Base", which is internal to BDM. The data were used in developing the methodology presented in the MOE program report, and will also be used in any follow-on work. Details are available to authorized individuals.

A-2 TREATMENT OF DATA.

The MOE Data Base document is classified SECRET-RESTRICTED DATA. Although information from the data base was used in developing the MOE methodology, it has been presented in unclassified form as derived from FM 101-31-3. Effects calculations not found in FM 101-31-3 were derived from Project RAND Damage Probability Computer, a part of RAND R-1380-PR, dated February 1974. Unclassified exemplary data using fictional units and locations are presented herein using the format of the data base document. All distances are in meters unless otherwise indicated.

PRECEDING PAGE BLANK-NOT FILMED

TNF S^2 MOE

DATA SHEET 1 - ARTY, SSM, SAM

SYSTEM: Medium Artillery (155mm)

RANGE: MIN: 2000 MAX: 20,000 PREFERRED: 10-15,000

CEP MIN RG: 12 MAX RG: 128 PREFERRED RG: 64-97

OPERATIONAL CONCEPT: Provide direct support (DS) conventional, chemical, and nuclear fire support to a designated brigade. Provide general support (GS) fires in support of a designated division artillery. Provide reinforcing fires to a designated DS artillery unit.

MUNITIONS (TYPE)	A W10Y1	B	C	D	E
YIELD:	1KT				
THEATER STOCK:	X				
IN FLIGHT REL:	.99				
P_k vs T_k (.)	.97-.85				
MR CO	.97-.88				
ARTY BTRY	.97-.90				
SAM BTRY	.97-.90				
SSM BTRY	.97-.90				
RGT HQ	.81-.71				
DIV HQ	.44-.40				
DIV ARTY HQ	.81-.71				
30 PSI	225				
100 PSI	125				
300 PSI	84				

SYSTEM PECULIAR COMMUNICATION EQUIPMENT: None.

TNF S^2 MOE

DATA SHEET 2 - ARTY, ADM, SSM, SAM

UNIT DESIGNATION: 320th BN 489th ARTY 23d MECH DIV ATTACH DATA SHEET 3

KASERNE LOCATION: TEUFELBACH CORPS ZONE: XXV

SASP LOCATION: UNTERTEUFELBACH PNL: 18 W10Y1

ASP LOCATION: NORDTEUFELBACH BASIC LOAD: 3600 rounds

GDP LOCATION: FROHEDORF

DISTANCES: KASERNE TO SASP 18 KM West KASERNE TO ASP 9 KM South

KASERNE TO GDP 185 KM East SASP TO GDP 203 KM East

ASP TO GDP 186 KM East GDP IN XXX CORPS ZONE

TIME TO UPLOAD AT SASP: 2-1/2 hours

MISSION FOR INITIAL MOVE TO FIELD: ON ORDER, ASSEMBLE UNIT WITH PNL AND BASIC LOAD IN DESIGNATED ASSEMBLY AREA, REPORT CLOSING TIMES. BE PREPARED TO MOVE TO GDP VICINITY FROHEDORF.

COMBAT MISSION: Direct support - 1st Brigade (MECH), 23d INF. DIV.

OPERATIONAL CONCEPT: (SEE DATA SHEET 1)

TNF S^2 MOE

DATA SHEET 3 - SASP, ASP

SITE LOCATION UNTERTEUFELBACH ATTACH SITE PLAN SKETCH
CUSTODIAL UNIT: 320th BN, 489th ARTY (US) FRG BE NL UK IT GR TU
SITE TYPE: A

MUNITIONS STORED: A W10Y1-36 B W10Y2-24 C W30Y1-10 D W30Y2-10 E
(TYPE/NUMBER) F G H I J
K

NO. IGLOOS: 8 HARDNESS (PSI) 30
COMMUNICATIONS TYPE & NUMBERS: FM RADIO-4, AM RATT-1, LANDLINES - 3
SENSOR TYPES OUTSIDE FENCE: SEISMIC INSIDE ACOUSTIC, SEISMIC
ON IGLOO DOORS SEISMIC, ELECTRIC INTER-LOCK INSIDE IGLOOS NONE

ACTIVE DEFENSE	TROOPS	TIME	ARMAMENT	UNIT
SECURITY FORCE:	4	2 min	M16, M60, M79	320/489
RESPONSE FORCE:	15	5 min	SAME	SAME
AUGMENTATION FORCE:	100	1 hour	SAME	A Co.13/329 INF

TIME TO DISPERSE: 2-1/2 hrs. SUPPORT REQD: 16 5T TRUCKS, 64 men
FIELD LOCATION: FROHEDORF, OTHERS GUARDS: 2 per Vehicle + Response force
VEHICLES: 16-5T, 4-1/4T, 1-5T Wrecker SENSORS: NONE
COMMUNICATION: FM Radio
MISSION: ON ORDER, EVACUATE SASP, ASSEMBLE WITH PARENT UNIT IN DESIGNATED ASSEMBLY AREA.

SITE PECULIAR SECURITY PROBLEMS: ONLY ONE ACCESS ROAD. HEAVY FOREST ON TWO SIDES. NEAR (1 KM) TOWN OF 6500 POPULATION WITH KNOWN WARSAW PACT SYMPATHIZERS.

TNF S^2 MOE

DATA SHEET 4 - TAC AIR, ASW

AIRCRAFT TYPE F-X

COMBAT RADIUS/MISSION PROFILE	LOW HI LOW	LOW LOW LOW	LOW HIGH HIGH
CENTER LINE TANKS	750	650	900
WING TANKS	800	700	950
ALL TANKS	900	800	1100
NO TANKS	500	400	600

MUNITIONS:

TYPE A MK50Y1 B MK50Y2 C MK50Y3 D ____ E ____

F ____ G ____ H ____ I ____ J ____

P_k	A	B	C	D	E	F	G	H	I	J
TK CO	.42	.79	.89							
MR CO	.42	.82	.92							
ARTY BTRY	.97	.97	.97							
SAM BTRY	.97	.97	.97							
SSM BTRY	.97	.97	.97							
RGT HQ	.42	.82	.88							
30 PSI	325	480	1040							
100 PSI	180	265	577							
300 PSI	120	180	377							

SYSTEM PECULIAR COMMUNICATION EQUIPMENT: UHF, VHF, FM RADIOS

TNF S^2 MOE

DATA SHEET 5 - AIR/ASW BASES

BASE NAME: GROSSENTISCH AB LOCATION GROSSENTISCH

UNIT: 3879 TFW ACFT TYPE: F-X NO: 60

RUNWAYS: NO: 2 LENGTH: 2000 WIDTH: 100

ORIENTATION: 270,190 OVERRUN: 400 NO.TAXIWAYS: 2

SHELTERS:

FOR ACFT: 18 FOR FUEL TRUCKS: 10

HARDNESS: 30 PSI HARDNESS: 10 PSI

FUEL STORAGE: ABOVE GND: 20,000 GAL BELOW GND: 400,000GAL TOTAL: 420,000

EMERGENCY PWR: WHICH FACILITIES CMD CTR, SQDN OPS, BASE OPS.

TYPE: DIESEL HOW MUCH: 400KW

EXERCISE CYCLE: DAILY

EMERGENCY WATER SUPPLY? YES HOW MUCH? 100,000 GAL

SNOW REMOVAL EQUIPMENT? NO HOW MUCH?

CHEMICAL WARFARE: COLLECTIVE PROTECTION? NO

INDIV. PROT? 20% DECON CAPABILITY? NO

FIRE PROTECTION EQUIPMENT? YES HOW MUCH? 4 FOAM TRUCKS

RAPID RUNWAY REPAIR KIT? YES COMPLETE? NO

COMMUNICATION-COMMAND CENTER HARDNESS: 10 PSI

SQUADRON OPERATIONS CENTERS HARDNESS: 10 PSI

VITAL MAINT. FUNCTIONS HARDNESS: 3 PSI

AIR CREW EQUIPMENT STORAGE HARDNESS: 3 PSI

SAS SITE - ATTACH DATA SHEET 3

UNIT MISSION: MAINTAIN FOUR AIRCRAFT ON DAILY QRA WITH MK50Y2 LOADED. ON ORDER, PROVIDE CLOSE AIR SUPPORT TO DESIGNATED GROUND UNITS. BE PREPARED TO CONDUCT DEEP STRIKES WITH CONVENTIONAL OR NUCLEAR BOMBS.

OPERATIONAL CONCEPT: PROVIDE IMMEDIATE CLOSE AIR SUPPORT TO GROUND UNITS. CONDUCT CONVENTIONAL ARMED RECONNAISSANCE FROM BOMB LINE TO OPERATIONAL DEPTH. PROVIDE PREPLANNED AND IMMEDIATE CONVENTIONAL OR NUCLEAR AIR STRIKES FOR INTERMEDIATE AND DEEP INTERDICTION.

APPENDIX B
USEUCOM ISSUES AND MOE

TNF issues were developed in coordination with the military services and USEUCOM. The issues were broken down into detailed elements, similar to the process MOE discussed in this report, for ease in development of both MOE and Issue Evaluation Plans.

APPENDIX C
GLOSSARY

ADM - atomic demolition munitions.

ASW - antisubmarine warfare (air delivered depth bombs and surface/submarine delivered weapons included in TNF).

Augmentation force - offsite security reinforcement force (infantry-company nominal size 100 men).

Battlefield support - TNF tactical mission (e.g., close air support, general and direct support artillery).

Bonus damage - damage to nontargeted enemy units.

CAS - combat alert status.

Collateral damage - damage to nontargeted units.

Conditional probability - probability based on the occurrence of given event(s).

Dual capable aircraft (DCA) aircraft which can carry both nuclear and conventional ordnance (F4, F104, F111, FB111, Vulcan (UK)).

FEBA - forward edge of the battle area.

FEDS - forced entry deterrent systems.

GDP - general defense position.

General nuclear release - TNF tactical mission (theater-wide release of tactical nuclear weapons).

Honest John - surface-to-surface rocket (dual capable-replaced by Lance missile in U.S. units, but retained in some allied units).

Issue Evaluation Plan (IEP) - TNF S^2 program management and planning document for issue/improvement testing and evaluation.

Joint probability - probability of the joint occurrence of two or more events.

PRECEDING PAGE BLANK-NOT FILMED

K - number of units killed.

Kt - kilotons of yield.

Kaserne - European theater peacetime troop location.

Lance - surface-to-surface tactical missile.

Lethal area (LA) - the area inside which target elements have greater than 50% probability of receiving the specified degree of damage. (Immediate transient casualties incurred by personnel in tanks used in this report. Immediate transient incapacitation (3000 rad): personnel will become incapacitated within 5 minutes of exposure and will remain so for 30-45 minutes. Then partial recovery with continued functional impairment until death in 4-6 days.)

MC 14/2 - NATO Military Committee Document, basis for "trip-wire response" strategy; (superseded by MC14/3).

MC 14/3 - NATO Military Committee Document, basis for "flexible response" strategy; (approved 1967).

MOB - Main Operating Base (Air Force).

MOE - measures of effectiveness.

<u>Force MOE</u>: E_F = total force effectiveness of all TNF systems across all scenarios

$$= \sum_{ij} w_i E_{F_{ij}}$$

$$E_{F_{ij}} = P_{SUR_{ij}} \, P_{AVAIL_{ij}} \, P_{EFF_{ij}} \, n_{ij} \, m_{ij}$$

where n_{ij} = number of units of type j in TNF scenario i.

and m_{ij} = mission support capability of a unit of type j (measured in units common to all TNF weapon systems) in scenario i.

Functional MOE: measures of performance of the functions which a given weapon system must perform to accomplish its mission.

$P_{SUR_{ij}}$ = probability unit type j will survive in scenario i.

$P_{AVAIL_{ij}}$ = probability that a surviving unit type j will be available when called upon to perform a mission in scenario i.

$P_{EFF_{ij}}$ = probability an available unit type j will be effective in performing assigned mission in scenario i.

Systemic MOE: Factors affecting system performance in functional areas.

Security:

P_d = probability of detection/location by enemy of nuclear weapon storage site.

P_i = probability of identification as nuclear weapon storage site given detection.

P_a = probability of attack or penetration attempt given identification.

P_D = probability of detection of an attack.

P_R = probability of correct, appropriate, and timely response given detection of an attack.

P_{RE} = probability of repelling an attack following response.

Survivability:

P_d = probability of detection by enemy of existence/location of friendly unit.

P_i = probability friendly unit is identified by type.

P_t = probability identified friendly unit is acquired and assigned as a target by enemy.

P_h = probability targeted friendly unit hit by enemy fire.

P_n = probability friendly unit neutralized given hit.

P_k = probability friendly unit killed given that it was neutralized.

P_{cd} = probability friendly unit sustains collateral damage given that it is not hit by enemy fire.

P_{ncd} = probability friendly unit is neutralized given that it has sustained collateral damage.

P_{kcd} = probability friendly unit killed by collateral damage.

Availability:

P_{mo} = probability unit is moving or engaged in other activity which makes it unavailable for use.

P_c = probability unit is unavailable due to loss/breakdown of communications.

P_{ma} = probability unit is down for unscheduled maintenance or repair.

P_s = probability unit is unavailable for use due to suppressive fire.

P_e = probability unit is out of ammunition or usable to obtain ammunition required for mission.

Unit effectiveness:

P_d = probability of detection of existence of enemy unit.

P_i = probability of identification of detected enemy unit.

P_t = probability identified enemy unit acquired as a target by friendly target acquisition process.

P_h = probability of hitting targeted enemy units.

P_n = probability enemy unit neutralized given hit.

P_k = probability enemy unit killed given that it was neutralized.

P_{cd} = probability of obtaining bonus damage on nontargeted enemy units.

P_{ncd} = probability bonus damage neutralizes enemy unit.

P_{kcd} = probability bonus damage kills enemy unit.

Process MOE: Quantitative measures of system performance (which may or may not be probabilistic) derived from system specifications and design characteristics, field exercises, simulations, and operational testing. Serve as input for determination of systemic MOE.

Monte Carlo process - A technique of statistical analysis which uses random numbers for repeated experimental simulations.

NATO - North Atlantic Treaty Organization.

Nike Hercules - U.S. dual capable surface-to-air missile.

NV Aids - Night-vision aids.

P_N - Probability of being neutralized (also P_n).

P_{SD} - the probability that a unit will survive with damage, i.e., that it will be damaged but not neutralized.

P_{SU} - the probability that a unit will survive undamaged.

POK - Percent of Knowledge. A system used in wargaming for treating target acquisition by using values for the probability of locating and identifying force components, values being dependent on the type of unit and distance behind the FEBA.

Pershing - A medium range U.S. tactical nuclear missile.

QRA - NATO quick reaction alert force.

Response force - an off-site force associated with each nuclear storage site which is capable of moving quickly to the defense of that site.

Second echelon - those Soviet and Warsaw Pact units following the first echelon forces (located 25-300km behind the forward edge of the battle area.)

Security force - the on-site force located at each nuclear storage site charged with the immediate security and defense of that site.

S^2 - survivability and security.

SLBM - submarine-launched ballistic missile(s).

TLE - target location error.

TNF - theater nuclear force.

TNF S^2 - the Department of Defense directed Theater Nuclear Force Survivability and Security Program.

USEUCOM - United States European Command.

WP - Warsaw Pact.

DISTRIBUTION LIST

DEPARTMENT OF DEFENSE

U.S. Documents Officer
AFSOUTH
ATTN: U.S. Documents Officer

Armed Forces Staff College
ATTN: Reference & Technical Services Branch

Assistant Secretary of Defense
International Security Affairs
ATTN: P & P Nuclear Policy
ATTN: Policy Plans & NSC Affairs
ATTN: NATO Nuc. Policy Div.
ATTN: European & NATO Affairs

Assistant Secretary of Defense
Comm., Cmd., Cont. & Intell.
ATTN: Surveillance & Warning System
ATTN: Combat Support
ATTN: Intelligence Systems

Assistant Secretary of Defense
Program Analysis & Evaluation
ATTN: General Purpose Programs
ATTN: Strategic Programs
ATTN: Regional Programs

Assistant to the Secretary of Defense
Atomic Energy
ATTN: Executive Assistant

Command & Control Technical Center
ATTN: C331/NCPS

Commander-in-Chief, U.S. European Command
ATTN: J-5
ATTN: J-2-ITD
ATTN: J-5NPG
ATTN: J-3
ATTN: J-2
ATTN: J-417-LW
ATTN: J-6

Commander-in-Chief, Pacific
ATTN: J-2
ATTN: J-54
ATTN: J-3
ATTN: J-6

Defense Advanced Rsch. Proj. Agency
ATTN: TTO

Defense Communications Agency
ATTN: Director

Defense Communications Engineer Center
ATTN: R-123

Defense Intelligence Agency
ATTN: RDS-3C
ATTN: DT-1

Defense Nuclear Agency
ATTN: OASO
ATTN: STSS
4 cy ATTN: TITL

DEPARTMENT OF DEFENSE (Continued)

Field Command
Defense Nuclear Agency
ATTN: FCC-FCRRK
ATTN: FCP-FCPRT
ATTN: FCPR

Field Command
Defense Nuclear Agency
Livermore Division
ATTN: FCPRL

Field Command
Defense Nuclear Agency
Los Alamos Branch
ATTN: FCPRA

Intelligence Center, Pacific
ATTN: I-3

Interservice Nuclear Weapons School
ATTN: TTV

Joint Chiefs of Staff
ATTN: J-5, Nuclear Division
ATTN: SAGA
ATTN: J-3

Joint Strat. Tgt. Planning Staff
ATTN: JP
ATTN: JL

Mutual & Balanced Force Reduction
DOD MBFR Task Force
ATTN: R. Clarke

National Defense University
ATTN: NWCLB-CR

NET Assessment
Office of the Secretary of Defense
ATTN: DIR, A. Marshall

U.S. Forces, Korea
ATTN: DJ-AM-SM
ATTN: CJ-P-G

U.S. National Military Representative
SHAPE
ATTN: U.S. Documents Officer for OPS
(Nuc. Plans)

Undersecretary of Def. for Rsch. & Engrg.
ATTN: Strategic & Space Systems (OS)

Defense Technical Information Center
12 cy ATTN: DD

DEPARTMENT OF THE ARMY

Deputy Chief of Staff for OPS & Plans
Department of the Army
ATTN: DAMO-RQS
ATTN: DAMO-SSP
ATTN: DAMO-SSN, LTC Cooper
ATTN: DAMO-SSW
ATTN: DAMO-NCC, V. Fenwick
ATTN: DAMO-ZD, C. Williams

DEPARTMENT OF THE ARMY (Continued)

Deputy Chief of Staff for Rsch. Dev. & Acq.
Department of the Army
ATTN: Advisor for RDA Analysis, M. Gale
ATTN: DAMA-CSS-N, W. Murray
ATTN: DAMA-CSM-N

Deputy Undersecretary of the Army
ATTN: Mr. Lester (Operations Research)

Electronics Tech. & Devices Lab.
U.S. Army Electronics R&D Command
ATTN: DELEW, R. Freiberg

Harry Diamond Laboratories
Department of the Army
ATTN: DELHD-N-RBA, J. Rosado
ATTN: DELHD-N-CO, J. Ramsden
ATTN: DELHD-N-TD, W. Carter
ATTN: DELHD-N-P, F. Balicki

Measurement ECM & Support Technical Area
Department of the Army
ATTN: DRSEL-WL-M-M

Office of the Chief of Staff
Department of the Army
ATTN: DACS-DMO

U.S. Army Air Defense School
ATTN: ATSA-CD-SC

U.S. Army Armament Research & Development Command
ATTN: DRDAR-LCN-E

U.S. Army Ballistic Research Labs.
ATTN: DRDAR-BLV

U.S. Army Comb. Arms Combat Dev. Acty.
ATTN: AT 2LCA-DLT

U.S. Army Concepts Analysis Agency
ATTN: CSCA-WGG

U.S. Army Elct. Warfare Lab.
ATTN: DELEW-M-FM, S. Megeath

Commander-in-Chief
U.S. Army Europe and Seventh Army
ATTN: DCSOPS-AEAGB
ATTN: DCSOPS-AEAGC-O-N
ATTN: DCSOPS-AEAGD-MM

U.S. Army Forces Command
ATTN: AFOP-COE

U.S. Army Materiel Dev. & Readiness Cmd.
ATTN: DRCDE-DM

U.S. Army Materiel Sys. Analysis Activity
ATTN: DRXSY-DS
ATTN: DRXSY-S

U.S. Army Missile R&D Command
ATTN: DRSMI-YDR, Foreign Intelligence Office

U.S. Army Nuclear & Chemical Agency
ATTN: Library for MONA-ZB
ATTN: Library for MONA-SAL

DEPARTMENT OF THE ARMY (Continued)

U.S. Army Ordnance & Chemical Center and School
ATTN: ATSL-CCC-M

U.S. Army TRADOC Systems Analysis Activity
ATTN: ATAA-TDC, J. Hesse

U.S. Army Training and Doctrine Comd.
ATTN: ATORI-IT-TA

U.S. Army War College
ATTN: AWCI, R. Rogan

V Corps
Department of the Army
ATTN: AETVFAS-F, P. Reavill

VII Corps
Department of the Army
ATTN: AETSFA-FSE
ATTN: AETSGB-I
ATTN: AETSGB-O
ATTN: AETSGC-O

DEPARTMENT OF THE NAVY

David Taylor Naval Ship R&D Ctr.
ATTN: Code 174/Code 186

Naval Academy
ATTN: Nimitz Library/Technical Rpts. Branch

Naval Material Command
ATTN: MAT-OON

Naval Ocean Systems Center
ATTN: Research Library

Naval Postgraduate School
ATTN: Code 1424, Library

Naval Research Laboratory
ATTN: Code 4108

Naval Surface Weapons Center
ATTN: Code F31
ATTN: Code F32, W. Emberson
ATTN: Code X211

Naval War College
ATTN: Center for War Gaming
ATTN: I2

Naval Weapons Center
ATTN: Code 31707

Naval Weapons Evaluation Facility
ATTN: Code AT

Nuclear Weapons Tng. Group, Atlantic
ATTN: Technical Library

Office of Naval Research
ATTN: Code 713

Office of the Chief of Naval Operations
ATTN: OP 604

DEPARTMENT OF THE NAVY (Continued)

Plans & Policies Department
Headquarters, Marine Corps (Code PL)
ATTN: Joint Strategic Branch

Commander-in-Chief, U.S. Atlantic Fleet
ATTN: Code J-34
ATTN: Code J-54

Commander-in-Chief, U.S. Naval Forces, Europe
ATTN: N326, R. Thomas

DEPARTMENT OF THE AIR FORCE

Aeronautical Systems Division
Air Force Systems Command
ATTN: XRO/MAR, J. Sherrod

Aerospace Defense Command
ATTN: ADCOM/INA

Air Force Armament Laboratory
ATTN: AFATL/DLY

Air Force Weapons Laboratory
Air Force Systems Command
ATTN: SUL
ATTN: NSSB
ATTN: AFWL SA
ATTN: NTN

Assistant Chief of Staff
Studies & Analyses
Department of the Air Force
ATTN: AF/SAMI

Deputy Chief of Staff
Operations Plans and Readiness
Department of the Air Force
ATTN: AFXOXF, R. Linhard
ATTN: AFXOXFM

Deputy Chief of Staff
Research, Development, & Acq.
Department of the Air Force
ATTN: AFRDQSM

Tactical Air Command
Department of the Air Force
ATTN: XPS
ATTN: XPSC
ATTN: DRA

Commander-in-Chief, U.S. Air Forces in Europe
ATTN: XPXX
ATTN: INAT
ATTN: XPX

DEPARTMENT OF ENERGY

Department of Energy
ATTN: OMA, D. Hoover

Department of Energy
ATTN: DOE/ISA

DEPARTMENT OF ENERGY CONTRACTORS

Lawrence Livermore National Laboratory
ATTN: R. Barker
ATTN: D. Blumenthal
ATTN: M. Gustavson

Los Alamos National Scientific Laboratory
ATTN: G. Best

Sandia National Laboratories
ATTN: J. Kaizur
ATTN: Sys. Studies Div. 1313
ATTN: 1313, T. Edrington

DEPARTMENT OF DEFENSE CONTRACTORS

Advanced Research & Applications Corp.
ATTN: R. Armistead

AVCO Research & Systems Group
ATTN: G. Grant
ATTN: J. Gilmore

Battelle Memorial Institute
ATTN: D. Hamman

BDM Corp.
ATTN: J. Braddock

BDM Corp.
ATTN: T. McWilliams

General Electric Company—TEMPO
ATTN: DASIAC

General Research Corp.
ATTN: H. Schroeder
ATTN: P. Lowry

Hudson Institute, Inc.
ATTN: H. Kahn

Hughes Aircraft Co.
ATTN: H. Ward

JAYCOR
ATTN: E. Almquist
ATTN: R. Sullivan

JAYCOR
ATTN: S. Brucker

Kaman Sciences Corp.
ATTN: F. Shelton

LFE Corp.
ATTN: M. Nathans

Lockheed-California Co.
ATTN: G. Busch

Mathematical Applications Group, Inc.
ATTN: M. Cohen

Mission Research Corp.
ATTN: D. Sowle

DEPARTMENT OF DEFENSE CONTRACTORS (Continued)

R & D Associates
ATTN: C. MacDonald
ATTN: S. Cohen
ATTN: A. Latter
ATTN: P. Haas

R & D Associates
ATTN: R. Latter

Rand Corp.
ATTN: W. Jones
ATTN: Library

Santa Fe Corp.
ATTN: D. Paolucci

Science Applications, Inc.
ATTN: J. Martin
ATTN: M. Drake

Science Applications, Inc.
ATTN: W. Layson

SRI International
ATTN: D. Elliott
ATTN: P. Dolan

DEPARTMENT OF DEFENSE CONTRACTORS (Continued)

SRI International
ATTN: R. Foster
ATTN: W. Berning

Systems, Science & Software, Inc.
ATTN: K. Pyatt

Systems, Science & Software, Inc.
ATTN: J. Cane

Technology Service Corp.
ATTN: S. Canby

Tetra Tech, Inc.
ATTN: F. Bothwell

TRW Defense & Space Sys. Group
ATTN: N. Lipner

TRW Defense & Space Sys. Group
ATTN: P. Dai

Vector Research, Inc.
ATTN: S. Bonder