AD-A088 243 BROWN UNIV PROVIDENCE RI LEFSCHETZ CENTER FOR DYNAMI--ETC F/G 12/1
ANALYSIS OF NONLINEAR STOCHASTIC SYSTEMS WITH WIDE-BAND INPUTS.(U)
JUN 80 H J KUSHNER, Y BAR-NESS N00014-76-C-0279

UNCLASSIFIED AFOSR-TR-80-0578 NL

1 OF 1
AD
A088243

END
DATE
FILMED
9-80
DTIC

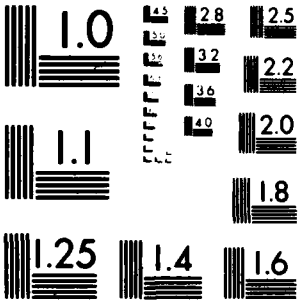

MICROCOPY RESOLUTION TEST CHART
NATIONAL BUREAU OF STANDARDS 1963 A

UNCLASSIFIED

SECURITY CLASSIFICATION OF THIS PAGE (When Data Entered)

LEVEL II

B.S.

(3)

REPORT DOCUMENTATION PAGE

READ INSTRUCTIONS BEFORE COMPLETING FORM

1. REPORT NUMBER (19) (18) AFOSR-TR- 80-0578	2. GOVT ACCESSION NO. AD-A088 243
3. RECIPIENT'S CATALOG NUMBER	
4. TITLE (and Subtitle) (6) ANALYSIS OF NONLINEAR STOCHASTIC SYSTEMS WITH WIDE-BAND INPUTS.	5. TYPE OF REPORT & PERIOD COVERED (9) Interim rept.
	6. PERFORMING ORG. REPORT NUMBER
7. AUTHOR(s) (15) N00014 H. J. Kushner Y. Bar-Ness	8. CONTRACT OR GRANT NUMBER(s) 4-76-C-0279-P00E, AFOSR-76-3063
9. PERFORMING ORGANIZATION NAME AND ADDRESS Brown University Division of Applied Mathematics Providence, RI 02912 (11) Jun 80	10. PROGRAM ELEMENT, PROJECT, TASK AREA & WORK UNIT NUMBERS (16) 61102F (17) 2304/A4
11. CONTROLLING OFFICE NAME AND ADDRESS Air Force Office of Scientific Research/NM Bolling AFB, Washington, DC 20332	12. REPORT DATE June 1980
	13. NUMBER OF PAGES 19
14. MONITORING AGENCY NAME & ADDRESS(if different from Controlling Office) (10) Harold J. Kushner Y. Bar-Ness	15. SECURITY CLASS. (of this report) UNCLASSIFIED
	15a. DECLASSIFICATION/DOWNGRADING SCHEDULE

16. DISTRIBUTION STATEMENT (of this Report)

Approved for public release; distribution unlimited.

17. DISTRIBUTION STATEMENT (of the abstract entered in Block 20, if different from Report)

DTIC ELECTE AUG 26 1980 S D E

18. SUPPLEMENTARY NOTES

19. KEY WORDS (Continue on reverse side if necessary and identify by block number)

20. ABSTRACT (Continue on reverse side if necessary and identify by block number)

A general method for approximating systems with wide-band inputs by diffusion processes id discussed. The input noise itself can be processed nonlinearly by elements of the system. One particular case is examined in detail, that of a hard limiter just after the input. The results suggest that the limiter can actually improve performance if the noise intensity is small. The development illustrates how tricky, but potentially useful, nonlinearities can be handled when the system input is wide-band noise.

AD A088243

DDC FILE COPY

DD FORM 1 JAN 73 1473 EDITION OF 1 NOV 65 IS OBSOLETE

UNCLASSIFIED 401834

SECURITY CLASSIFICATION OF THIS PAGE (When Data Entered)

AFOSR-TR- 80-0578

ANALYSIS OF NONLINEAR STOCHASTIC SYSTEMS WITH WIDE-BAND INPUTS

Harold J. Kushner*

Y. Bar-Ness**

Abstract

A general method for approximating systems with wide-band inputs by diffusion processes is discussed. The input noise itself can be processed nonlinearly by elements of the system. One particular case is examined in detail, that of a hard limiter just after the input. The results suggest that the limiter can actually improve performance if the noise intensity is small. The development illustrates how tricky, but potentially useful, nonlinearities can be handled when the system input is wide-band noise.

Accession For
NTIS GRA&I ☑
DDC TAB ☐
Unannounced ☐
Justification
By
Distribution/
Availability Codes
Dist. | Avail and/or special
A

*Divisions of Applied Mathematics and Engineering, Lefschetz Center for Dynamical Systems, Brown University; work supported by AFOSR [redacted]-76-3063, NSF Eng. 77-12946, ONR N00014-76-C-0279-P003.

**Division of Applied Mathematics, Lefschetz Center for Dynamical Systems, Brown University; on leave from Department of Electrical Engineering, University of Tel Aviv. Work supported by AFOSR [redacted]-76-3063, ONR N00014-76-C-0279-P003.

80 8 14 123

Approved for public release; distribution unlimited.

I. Introduction

Consider a (linear or nonlinear) dynamical system with a wide-band noise input. It is often of considerable interest to approximate such systems by diffusion models so that, e.g., Markov process techniques can be used. In [1] - [4], [7], several powerful methods for doing this have been developed. Roughly, the input noise process is parametrized by ε and as $\varepsilon \to 0$, the bandwidth (BW) $\to \infty$, while the power per unit BW converges to a constant. The limit process is found via methods of weak convergence theory. The methods are particularly useful when the system noise (and/or signal) is processed nonlinearly; i.e., only nonlinear functions of the noise appear in the dynamics. The problem is often not what the so-called correction term might be, but what the entire form of the limit is, and this is not usually easy. In fact, when nonlinear functions of the noise appear, the notion of "correction term" loses much of its sense.

In this paper, the system of Figure 1 is dealt with.

$$(1.1)\qquad \begin{aligned} \dot{v}^\varepsilon &= F(v^\varepsilon) + Dy^\varepsilon, \\ y^\varepsilon &= L_\varepsilon \operatorname{sign} u^\varepsilon, \qquad u^\varepsilon = s + n^\varepsilon - G(v^\varepsilon), \qquad v^\varepsilon(t) \in R^r, \end{aligned}$$

where $n^\varepsilon(\cdot)$ is a scalar-valued wide-band noise input process. Conditions on $F(\cdot)$, $n^\varepsilon(\cdot)$ and $G(\cdot)$ will be given below. The main result is that as $\varepsilon \to 0$ (BW $\to \infty$), the measures of $\{v^\varepsilon(\cdot)\}$ converge to those of $v(\cdot)$ where $v(\cdot)$ satisfies the Itô equation

$$(1.2)\qquad dv = F(v)dt + LD[(\frac{s-G(v)}{\sigma})(\sqrt{2/\pi})\ dt + \sqrt{2 \ln 2/a}\ dB],$$

where $B(\cdot)$ is a standard Brownian motion and L, σ, a will be defined below. Roughly, "a" is related to the correlation function of the $n^\varepsilon(\cdot)/(E|n^\varepsilon(t)|^2)^{1/2}$, and σ^2 is the intensity of the spectrum of $n^\varepsilon(\cdot)$ in any band [0,BW] for small ε.

If, in the system of Fig. 1, the saturator and gain L_ε were replaced by a gain K, then the limit would be (follows from the method of this paper)

$$(1.3) \qquad dv = F(v)dt + KD[(s-G(v))dt + \sqrt{2R}\, db],$$

where for the noise model used for (1.1), $R = \sigma^2/a$. There is no so-called "correction term". Owing to the form of the saturator function, the formal technique of Stratonovich is inapplicable.

The example is offered to illustrate what can be done with one particularly annoying but useful nonlinearity. The basic method is widely applicable. The scheme is unrelated to statistical linearization, which in fact is not concerned directly with approximating processes.

Before proceeding, compare (1.2) and (1.3) for the case when the feedback $-G(\cdot)$ is supposed to be stabilizing (i.e., when the system is designed to make the error $s(t)-G(v^\varepsilon(t))$ small. In (1.2), the term in the dynamics which involves the error is proportional to $1/\sigma$, and in (1.3), the noise term is proportional to σ. Thus for small σ, we expect the limiter to enhance stability without increasing the noise effects, an important point to note. For large σ, the limiter does not seem to be helpful. A simulation comparison of the "pre-limit" with the limit for a somewhat different problem (a phase-locked loop with a saturator) suggests that the limit ($\varepsilon \to 0$) results are often the "worst" case, in that (for example) the limit mean square error often increased to the limit value as $\varepsilon \to 0$. (They also suggest that often the limit process is approached quite fast (as measured, say, by the mean square value of the input to the limiter) as $\varepsilon \to 0$.) We do not know the extent of applicability of this rule - but it seems to hold frequently. When it does hold, the limit results can provide useful upper bounds, and system improvements suggested by the form of the limit might well be improvements

for the "pre-limit" case also. Unfortunately, it is not usually possible to get approximate diffusion processes where the BW is not large - so, even if it is not large, the results for large BW might be a useful guide to the qualitative behavior.

Reference [5] contains some applications to problems in communications theory of the same general idea. But owing to the unbounded nature of the noise and the form of the discontinuity and feedback, the problem here is harder and the analytical details different.

Section II gives specific assumptions. The main background theorem and some comments on weak convergence appear in Section III, and the convergence $\{v^\varepsilon(\cdot)\} \to v(\cdot)$ is proved in Section IV. A similar method would be used with other nonlinearities.

II. Model Assumptions

1. The noise model. Let $z(\cdot)$ denote a stationary Gaussian process with correlation function $\sigma^2 \exp -a|\tau|$, $a > 0$, and set $n^\varepsilon(t) = z^\varepsilon(t)/\varepsilon$, where $z^\varepsilon(t) = z(t/\varepsilon^2)$. As $\varepsilon \to 0$, the spectral density of $n^\varepsilon(\cdot)$ converges to $2\sigma^2/a$ on any finite interval. The scaling is a convenient and common way of getting a noise process $n^\varepsilon(\cdot)$ whose spectrum converges (as $\varepsilon \to 0$) to that of a white noise with a constant power/unit bandwidth. For other correlation functions the $\sqrt{2 \ln 2}$ in (1.2) is replaced by something slightly different. We use the noise form only to facilitate the evaluation of the coefficient of $dB(\cdot)$ in (1.2). The Gaussian assumption simplifies the proof that certain integrals converge - but is not essential.

2. The limiter gain L_ε. If $L_\varepsilon \equiv L$, a number not depending on ε, then as $\varepsilon \to 0$, the "increased wildness" of $n^\varepsilon(\cdot)$ essentially wipes out the saturator -

replacing it by an open circuit. Thus L_ε must increase as ε decreases. In any particular fixed practical system, one particular value of L_ε will be used. But as the bandwidth $\to \infty$, this value of L_ε will have to increase (see proof in Section IV) and $\varepsilon L_\varepsilon$ will have to converge to a non-zero number. So we use $L_\varepsilon = L/\varepsilon$.

3. Other assumptions. $G(\cdot)$, $F(\cdot)$ are continuously differentiable and the solution to (1.2) is unique in the weak sense. $s(\cdot)$ is right continuous and uniformly bounded on $[0,\infty)$. The method is most easy to use if the functions are smooth. The analysis will be done with $g_\alpha(\cdot)$ replacing $g(\cdot) = \text{sat}(\cdot)$, where the piecewise linear $g_\alpha(\cdot)$ is defined in Fig. 2. We then get the result $\{v^\varepsilon(\cdot)\} \to v(\cdot)$ as $\varepsilon \to 0$, then $\alpha \to 0$.

III. Weak Convergence; A Convergence Theorem

Tightness. Let $D^r[0,\infty)$ denote the space of R^r-valued functions on $[0,\infty)$ which are right continuous and have left-hand limits. A certain topology called the Skorokhod topology ([6], section 14) is usually put on D^r. The process $v(\cdot)$ is considered to be a random variable with values in $D^r[0,\infty)$ and induces a measure P_ε on it. $\{P_\varepsilon\}$ or $\{v^\varepsilon(\cdot)\}$ is said to be tight iff for each $\delta > 0$ there is a compact $K_\delta \in D^r[0,\infty)$ such that $P_\varepsilon(K_\delta) \geq 1-\delta$, all ε. $\{v^\varepsilon(\cdot)\}$ is said to converge weakly to a process $v(\cdot)$ with paths in $D^r[0,\infty)$ and inducing measure P on it iff for each bounded real-valued function $g(\cdot)$ on $D^r[0,\infty)$, $\int q(\omega)\,dP_\varepsilon(\omega) \to \int q(\omega)\,dP(\omega)$ as $\varepsilon \to 0$. Thus weak convergence is a generalization of convergence in distribution. It is the appropriate form of convergence for our problem. The tightness condition for $\{v^\varepsilon(\cdot)\}$ will hold under our assumptions.

Truncated processes. The actual technical proofs of tightness and weak convergence are easier if the processes $\{v^\varepsilon(\cdot)\}$ are bounded. Define

$$(3.1)\qquad \dot{v}^{\varepsilon,N} = [F(v^{\varepsilon,N})+Dy^{\varepsilon,N}]b_N(v^{\varepsilon,N}), \qquad y^{\varepsilon,N} = L_\varepsilon g_\alpha(u^{\varepsilon,N}),$$

$$u^{\varepsilon,N} = s + n^\varepsilon - G(v^{\varepsilon,N}),$$

where $b_N(v) = 1$ for $v \in S_N = \{v: |v|\le N\}$, $b_N(v) = 0$ for $v \notin S_{N+1}$ and $b_N(v) \in [0,1]$ and has third derivatives that are bounded uniformly in v and N. If we can prove convergence for $\{v^{\varepsilon,N}(\cdot), \varepsilon\to 0\}$ for each N, then Theorem 1 says that we can prove it for (1.1). Thus, the truncation is purely technical and does not affect the result.

Definitions. Let A denote the infinitesimal operator of the diffusion (1.2). Let $\mathcal{F}_t^{\varepsilon,N}$ denote the σ-algebra induced by $\{v^{\varepsilon,N}(s), n^\varepsilon(s), s\le t\}$ and $E_t^{\varepsilon,N}$ the corresponding conditional expectation. Actually $\mathcal{F}_t^{\varepsilon,N}$ and $E_t^{\varepsilon,N}$ depend on α also. But we usually suppress the α affix. Let $\mathcal{M}$ be the class of measurable (ω,t) functions such that if $g(\cdot) \in \mathcal{M}$, then $E|g(t+\delta)-g(t)| \to 0$ as $\delta \downarrow 0$ and $\sup_t E|g(t)| < \infty$ and g(t) depends only on $\{v^{\varepsilon,N}(s), n^\varepsilon(s), s\le t\}$. We say $\text{p-lim}_{\delta\to 0} f^\delta = 0$ iff $\sup_{\delta,t} E|f^\delta(t)| < \infty$ and $E|f^\delta(t)| \to 0$ as $\delta \to 0$. Define an operator $\hat{A}^{\varepsilon,N}$ and its domain $\mathcal{D}(\hat{A}^{\varepsilon,N})$ as follows: $g \in \mathcal{D}(\hat{A}^{\varepsilon,N})$ and $\hat{A}^{\varepsilon,N}g = q$ iff $g,q \in \mathcal{M}$ and

$$\text{p-}\lim_{\delta\downarrow 0} E\left|\frac{E_t^{\varepsilon,N}g(t+\delta)-g(t)}{\delta} - q(t)\right| = 0.$$

The following theorem is Theorem 1 of [2], adapted to our case. $\mathcal{C}_0$ denotes the set of continuous real-valued functions on $R^r \times [0,\infty)$.

Theorem 1. Let the equation (1.2) have a unique weak-sense solution. Fix N. For each $f(\cdot) \in \mathscr{D}$, a dense set (sup norm) in $\hat{\mathscr{C}}_0$, let there be a sequence $\{f^{\varepsilon,N}(\cdot)\} \in \mathscr{A}$ satisfying the following:

$$\text{(3.2)} \qquad \underset{\substack{\varepsilon\to 0\\ \alpha\to 0}}{\text{p-lim}} \left| f^{\varepsilon,N}(t) - f(v^{\varepsilon,N}(t),t) \right| \to 0,$$

$$\text{(3.3)} \qquad f^{\varepsilon,N}(\cdot) \in \mathscr{D}(\hat{A}^{\varepsilon,N}),$$

$$\text{(3.4)} \qquad \underset{\substack{\varepsilon\to 0\\ \alpha\to 0}}{\text{p-lim}} \left| \hat{A}^{\varepsilon,N} f^{\varepsilon,N}(t) - (A^N + \tfrac{\partial}{\partial t}) f(v^{\varepsilon,N}(t),t) \right| = 0,$$

where A^N is the infinitesimal operator of some diffusion process and the coefficients of A^N and A are equal for $v \in S_N$. Then if $\{v^{\varepsilon,N}(\cdot)\}$ is tight for each N, $\{v^{\varepsilon}(\cdot)\} \to v(\cdot)$ weakly.

Comment. Tightness is not hard to prove here. See comments at the end of the proof of Theorem 2, which applies Theorem 1 to our case (1.1). Given $f(\cdot,\cdot)$, the main problem is to find the $f^{\varepsilon,N}(\cdot)$ and to verify (3.2) - (3.4) (and ultimately to prove tightness). The method used here and in [1], [2] is similar to the averaging method used in [3]. We choose the form $f^{\varepsilon,N}(t) = f(v^{\varepsilon,N}(t),t) + f_1^{\varepsilon,N}(t) + f_2^{\varepsilon,N}(t)$, where $f_1^{\varepsilon,N}(t)$ is chosen so as to "average out" certain noise-dependent terms in $\hat{A}^{\varepsilon,N} f(v^{\varepsilon,N}(t),t)$, and $f_2^{\varepsilon,N}(t)$ is chosen to "average out" certain noise-dependent terms which result from applying $\hat{A}^{\varepsilon,N}$ to $f_1^{\varepsilon,N}(t)$. In the proof $\lim_{\substack{\varepsilon\to 0\\ \alpha\to 0}}$ means $\lim_{\varepsilon\to 0} \lim_{\alpha\to 0}$.

IV. The Convergence Theorem

Theorem 2. Under the assumptions in Section II, $\{v^\varepsilon(\cdot)\}$ converges weakly to $v(\cdot)$ as $\varepsilon \to 0$ and then $\alpha \to 0$.

Proof. Let $\mathscr{D} = \mathscr{C}_0^{2,3}$, the subspace of $\hat{\mathscr{C}}_0$ of functions whose mixed partial derivatives up to order 2 in t and 3 in x are continuous. By Theorem 1, for each N and $f(\cdot,\cdot) \in \mathscr{D}$, we only need to find $\{f^{\varepsilon,N}(\cdot)\}$ satisfying (3.2) - (3.4). For notational convenience write $v^{\varepsilon,N}(\cdot)$ as $v^\varepsilon(\cdot)$ in this proof, but we are always working with the truncated process $v^{\varepsilon,N}(\cdot)$.

Part 1. Fix $f(\cdot,\cdot) \in \mathscr{D}$. Then

$$(4.1) \quad \hat{A}^{\varepsilon,N} f(v^\varepsilon(t),t) = f_t(v^\varepsilon(t),t) + $$

$$+ b_N(v^\varepsilon(t)) f_v'(v^\varepsilon(t),t) \cdot [F(v^\varepsilon(t)) + \frac{DL}{\varepsilon} g_\alpha(s(t)+n^\varepsilon(t)-G(v^\varepsilon(t)))].$$

Note that for u in any bounded set

$$(4.2) \quad \frac{1}{\varepsilon} E g_\alpha(u+n^\varepsilon(t)) \equiv \hat{g}_\alpha^\varepsilon(u)/\varepsilon = \frac{1}{\varepsilon}[P\{z(0)>-\varepsilon u+\varepsilon\alpha\}-P\{z(0)<-\varepsilon u-\varepsilon\alpha\} + O(\varepsilon\alpha)/\varepsilon]$$

$$= \sqrt{2/\pi}\ \frac{u}{\sigma} + O(\alpha) + O(\varepsilon),$$

which justifies the $L_\varepsilon = L/\varepsilon$ scaling. We will get $f^{\varepsilon,N}(\cdot)$ in the form

$$f^{\varepsilon,N}(t) = f(v^\varepsilon(t),t) + f_1^{\varepsilon,N}(t) + f_2^{\varepsilon,N}(t),$$

where the $f_i^{\varepsilon,N}(\cdot)$ will be defined below.

The following estimate will be used.

(4.3) <u>On the set</u> $\{|z(t)|\le 1\}$ <u>or even on</u> $\{|z(t)|\le e^{a\tau/2}\}$,

$|P\{z(t+\tau)\in B|z(t)\} - P\{z(t+\tau)\in B\}| \le Ce^{-a_1\tau}$ <u>for some constants</u> C <u>and</u>

$a_1 > 0$, <u>uniformly in</u> B. <u>Similarly, on the same</u> $z(t)$ <u>set and for</u>

$\tau_2 > \tau_1 > 0$,

$|P\{z(t+\tau_i)\in B_i,\ i=1,2|z(t)\} - P\{z(\tau_i+t)\in B_i,\ i=1,2\}| \le Ce^{-a_1\tau_1}$ <u>for some</u>

$a_1 > 0$ <u>and</u> $C < \infty$ <u>and all</u> B_1, B_2.

In the sequel the values of a_1 and C may change from usage to usage. Define $\bar{g}_\alpha(u,n^\varepsilon(t)) = g_\alpha(u+n^\varepsilon(t)) - Eg_\alpha(u+n^\varepsilon(t))$ and define

$$f_1^{\varepsilon,N}(t) = \frac{L}{\varepsilon} b_N(v^\varepsilon(t))\int_0^\infty f_v'(v^\varepsilon(t),t+\tau)DE_t^{\varepsilon,N}\bar{g}_\alpha(s(t+\tau)-G(v^\varepsilon(t)),n^\varepsilon(t+\tau))d\tau$$

$$= \varepsilon L b_N(v^\varepsilon(t))\int_0^\infty f_v'(v^\varepsilon(t),t+\varepsilon^2\tau)DE_t^{\varepsilon,N}\bar{g}_\alpha(s(t+\varepsilon^2\tau)-G(v^\varepsilon(t)),z(\frac{t}{\varepsilon^2}+\tau)/\varepsilon)d\tau$$

By (4.3), $f_1^{\varepsilon,N}(t) = O(\varepsilon)$ uniformly in ω, α, on the set $\{|z(t/\varepsilon^2)|\le 1\}$. Define $w_1 = \min\{\tau: e^{-a\tau/2}|z(t/\varepsilon^2)|\le 1\}$. Write $f_1^{\varepsilon,N}(\cdot)$ as

$$f_1^{\varepsilon,N}(t) = \varepsilon\int_0^{w_1} E_t^{\varepsilon,N}\{\cdot\}\,d\tau + \varepsilon\int_{w_1}^\infty E_t^{\varepsilon,N}\{\cdot\}\,d\tau.$$

The first term is bounded in absolute value by $\varepsilon C w_1$ and the <u>integrand</u> of the second by $C\exp -a_1\tau$. Thus

(4.4) $|f_1^{\varepsilon,N}(t)| \le C\varepsilon(1+w_1) \le C\varepsilon[1 + \max(0,\log|z^\varepsilon(t)|)]$.

Part 2. It can be verified that $f_1^{\varepsilon,N}(\cdot) \in \mathcal{D}(\hat{A}^{\varepsilon,N})$ and that

$$(4.5)\qquad \hat{A}^{\varepsilon,N} f_1^{\varepsilon,N}(t) = -\frac{Lb_N(v^\varepsilon(t))}{\varepsilon} f_v'(v^\varepsilon(t),t) D\bar{g}_\alpha(s(t)-G(v^\varepsilon(t)),n^\varepsilon(t))$$

$$+ \frac{L}{\varepsilon}\int_0 E_t^{\varepsilon,N}[b_N(v^\varepsilon(t)) f_v'(v^\varepsilon(t),t+\tau) D\bar{g}_\alpha(s(t+\tau)-G(v^\varepsilon(t)),n^\varepsilon(t+\tau))]_v' \dot{v}^\varepsilon(t),$$

where the subscript* v denotes the gradient of the bracketed expression with respect to $v^\varepsilon(t)$. At this point, let us simplify the notation by dropping the $b_N(v)$ terms. All of the $f_i^{\varepsilon,N}$ will be proportional to either $b_N(v^\varepsilon(t))$ or $b_N^2(v^\varepsilon(t))$. Changing variables $\tau/\varepsilon^2 \to \tau$ and splitting the integral in (4.5) into two parts and using $\dot{v}^\varepsilon = b_N(v^\varepsilon)[s-G(v^\varepsilon)+Dg_\alpha/\varepsilon]$ (but dropping the $b_N(v)$) yields

$$(4.6)\qquad L^2\int_0^\infty E_t^{\varepsilon,N}(D'f_v(v^\varepsilon(t),t+\varepsilon^2\tau))_v' Dg_\alpha(s(t+\varepsilon^2\tau)-G(v^\varepsilon(t)),z(\frac{t}{\varepsilon^2}+\tau)/\varepsilon)\cdot$$

$$g_\alpha(s(t)-G(v^\varepsilon(t))+z(t/\varepsilon^2)/\varepsilon)d\tau + O(\varepsilon)$$

$$+ L^2\int_0^\infty E_t^{\varepsilon,N}(D'f_v(v^\varepsilon(t),t+\varepsilon^2\tau))\bar{g}_{\alpha,v}'(s(t+\varepsilon^2\tau)-G(v^\varepsilon(t),z(\frac{t}{\varepsilon^2}+\tau)/\varepsilon)D\cdot$$

$$g_\alpha(s(t)-G(v^\varepsilon(t))+z(t/\varepsilon^2)/\varepsilon)d\tau + O(\varepsilon).$$

The terms in (4.6) exist by the same arguments which led to (4.4). We next show that the second integral of (4.6) is negligible as $\varepsilon \to 0$, $\alpha \to 0$ and get an estimate which is useful for the tightness argument. The facts that $s(t)$ and $v^\varepsilon(t)$ are bounded (recall that we are using the truncated process (3.1)) and that the support of $g_{\alpha,u}(u)$ is* in $[-\alpha,\alpha]$ and that $|g_{\alpha,u}(u)| \le C/\alpha$

*$g_{\alpha,u}(\cdot)$ is the derivative of $g_\alpha(\cdot)$ with respect to its argument. The subscript v denotes the derivative with respect to the explicit argument v: replace $v^\varepsilon(t)$ by v, take the derivative with respect to v, then set $v = v^\varepsilon(t)$.

will be used frequently and perhaps without specific mention. Let $I\{A\}$ denote the indicator function of the set A.

By (4.3) it can be verified that

$$(4.7) \qquad Y \equiv \left|E_t^{\varepsilon,N}\tilde{g}_{\alpha,v}(s-G(v),z(\frac{t}{\varepsilon^2}+\tau)/\varepsilon)\right| \le [\exp -a_1\tau + I\{|z(t/\varepsilon^2)|>e^{a\tau/2}\}]C/\varepsilon.$$

We need a bound on Y which goes to zero as $\varepsilon \to 0$. First we get such a bound when $|z(t/\varepsilon^2)| \ge 1$. Note that

$$(4.8) \qquad P\{|s-G(v)+z(\frac{t}{\varepsilon^2}+\tau)/\varepsilon| \le \alpha \,\Big|\, z(t/\varepsilon^2)=z_0\} = O(\alpha\varepsilon)$$

uniformly for $|z_0| \ge 1$ and $\tau > 0$ (recall that s, v are in a bounded set - for each N). Now, (4.8) and the facts cited above (4.7) imply that Y is bounded by $O(\varepsilon)$, uniformly in $|z(t/\varepsilon^2)| \ge 1$, $\tau \ge 0$. Thus on $|z(t/\varepsilon^2)| \ge 1$,

$$(4.9) \qquad Y \le [\exp -a_1\tau + I\{|z(t/\varepsilon^2)|>e^{a\tau/2}\}]^{1/2}C(\varepsilon/\alpha)^{1/2}$$

(use $|x| \le a$, $|x| \le b \Rightarrow |x| \le \sqrt{ab}$). Thus, on integrating the bound when $|z(t/\varepsilon^2)| \ge 1$, we see that the second term of (4.6) is bounded above by

$$C[1 + \max(0, \log|z(t/\varepsilon^2)|)]\ (\varepsilon/\alpha)^{1/2}.$$

Now, we look for a bound when $|z(t/\varepsilon^2)| \le 1$. Split the second integral in (4.6) into the two parts $\int_0^\varepsilon + \int_\varepsilon^\infty$. The first part is $O(\varepsilon/\alpha)$. Note that the density of $z(\frac{t}{\varepsilon^2}+\tau)$, $\tau \ge \varepsilon$, conditioned on any value of $|z(t/\varepsilon^2)|$ in $[0,1]$, is bounded above by $O(1/\sqrt{\varepsilon})$. So (4.8) then holds with $O(\varepsilon\alpha)$ replaced by $O(\varepsilon^{1/2}\alpha)$.

Combining this estimate with (4.7) yields that Y is bounded above by (4.9) when $|z(t/\varepsilon^2)| \le 1$, <u>but with the change that</u> $(\varepsilon/\alpha)^{1/2}$ <u>is replaced by</u> $(\varepsilon^{1/4}/\alpha^{1/2})$ <u>in</u> (4.9). Thus, on integrating the bound, we get that the second term of (4.6) is bounded above by

$$(4.10) \qquad C[1 + \max(0, \log|z(t/\varepsilon^2)|)]\varepsilon^{1/4}/\alpha^{1/2}.$$

<u>Part 3</u>. We turn our attention to the first term of (4.6) and show that, by an "averaging", it can effectively be replaced by its expectation. To facilitate the development, we define the following terms.

$$h_\varepsilon(v,t,\tau,\rho) \equiv L^2 D' f_{vv}(v,t+\tau+\rho) D\cdot \bar{g}_\alpha(s(t+\tau+\rho)-G(v)+n^\varepsilon(t+\tau+\rho)) \cdot$$

$$\cdot\, g_\alpha(s(t+\rho)-G(v)+n^\varepsilon(t+\rho)),$$

$$H_\varepsilon(v,t,\tau,\rho) \equiv L^2 D' f_{vv}(v,t+\varepsilon^2\tau+\varepsilon^2\rho) D\cdot \bar{g}_\alpha(s+(t+\varepsilon^2\tau+\varepsilon^2\rho)-G(v)+z(\frac{t}{\varepsilon^2}+\tau+\rho)/\varepsilon) \cdot$$

$$\cdot\, g_\alpha(s(t+\varepsilon^2\rho)-G(v)+z(\frac{t}{\varepsilon^2}+\rho)/\varepsilon),$$

$$(4.11) \qquad A_0^{\varepsilon,N} f(v,t) \equiv \int_0^\infty EH_\varepsilon(v,t,\tau,0)\,d\tau = \frac{1}{\varepsilon^2}\int_0^\infty Eh_\varepsilon(v,t,\tau,0)\,d\tau.$$

$$(4.12) \qquad f_2^{\varepsilon,N}(t) \equiv \frac{1}{\varepsilon^2}\int_0^\infty d\rho \int_0^\infty d\tau\,[E_t^{\varepsilon,N} h_\varepsilon(v^\varepsilon(t),t,\tau,\rho) - Eh_\varepsilon(v,t,\tau,\rho)\Big|_{v=v^\varepsilon(t)}]$$

$$= \varepsilon^2 \int_0^\infty d\rho \int_0^\infty d\tau\,[E_t^{\varepsilon,N} H_\varepsilon(v^\varepsilon(t),t,\tau,\rho) - EH_\varepsilon(v,t,\tau,\rho)\Big|_{v=v^\varepsilon(t)}],$$

where $\Big|_{v\ v^{\varepsilon}(t)}$ implies that v is replaced by $v^{\varepsilon}(t)$ after taking the expectation. We must show that $f_2^{\varepsilon,N}(\cdot)$ is well defined. First note that the inner integral of $f_2^{\varepsilon,N}(t)$ (with $\rho = 0$ and a change of variables) is just the first term of (4.6) centered about its expectation. The form of $f_2^{\varepsilon,N}(\cdot)$ is chosen to allow us to average out the first term of (4.6) and to effectively replace it by its <u>average value</u> $A_0^{\varepsilon,N} f(v^{\varepsilon}(t),t)$.

By the method used to bound $|f_1^{\varepsilon,N}(t)|$, we can get that the inner integral of $f_2^{\varepsilon,N}(t)$ exists for each ρ. Recall the definition $w_1 = \min\{w: e^{-aw/2}|z(t/\varepsilon^2)| \le 1\}$ and write (4.12) as

$$\varepsilon^2 \int_{w_1}^{\infty} d\rho \int_0^{\infty} d\tau\, E_t^{\varepsilon,N} B + \varepsilon^2 \int_0^{w_1} d\rho \int_0^{\infty} d\tau\, E_t^{\varepsilon,N} B \equiv II + I.$$

First we show that II is well defined. By (4.3) and the definition of w_1, the absolute value of the integrand in II is bounded above by $C \exp -a_1\rho$, $a_1 > 0$. Also $|EH_{\varepsilon}(v,t,\tau,\rho)| \le C \exp -a_1\tau$ for some $a_1 > 0$. By (4.3) <u>and on the set</u> $\{\rho \ge w_1\}$, and for C, a_1 (whose values again may change from usage to usage)

$$\begin{aligned}
|E_t^{\varepsilon,N} H_{\varepsilon}(v,t,\tau,\rho)| &\le E_t^{\varepsilon,N} |E^{\varepsilon,N}_{t+\varepsilon^2\rho} H_{\varepsilon}(v,t,\tau,\rho)| \\
&\le C\, E_t^{\varepsilon,N}[\exp -a_1\tau + I\{e^{-a\tau/2}|z(\tfrac{t}{\varepsilon^2}+\rho)| \ge 1\}] \\
&= C \exp -a_1\tau + CP\{|z(\tfrac{t}{\varepsilon^2}+\rho)| \ge e^{a\tau/2} \,\big|\, \rho \ge w_1; z(t/\varepsilon^2)\} \\
&\le C \exp -a_1\tau + Ce^{-a\tau/2} E\{|z(\tfrac{t}{\varepsilon^2}+\rho)| \,\big|\, \rho \ge w_1; z(t/\varepsilon^2)\} \\
&\le C \exp -a_1\tau.
\end{aligned}$$

Chebychev's inequality is used to get the next-to-last inequality. Combining the above estimates yields that the integrand in II is bounded by (for some $a_1 > 0$, $C < \infty$) $C \exp -a_1(\tau+\rho)$. Hence $II = O(\varepsilon^2)$.

The term I is also $O(\varepsilon^2)$ but not uniformly in $z(t/\varepsilon^2)$. Bound the inner integral of I by

$$\int_0^\infty d\tau \left|E_t^{\varepsilon,N} B\right| \le E_t^{\varepsilon,N} \int_0^\infty d\tau \; \left|E^{\varepsilon,N}_{t+\varepsilon^2\rho} B\right| \doteq III.$$

By the arguments used to get the bound on $|f_1^{\varepsilon,N}(t)|$, we get

$$III \le C\varepsilon^2 \, E_t^{\varepsilon,N}[1 + \max(0, \log|z(\frac{t}{\varepsilon^2}+\rho)|)]$$

$$\le C\varepsilon^2 \, E_t^{\varepsilon,N}[1 + \log(|z(\frac{t}{\varepsilon^2}+\rho)| + 1)].$$

By Jensen's inequality and the concavity of $\log(\cdot)$,

$$III \le C\varepsilon^2[1 + \log(|z(\frac{t}{\varepsilon^2})| + C)].$$

Since $w_1 \le C \max(0, \log|z(t/\varepsilon^2)|)$,

$$(4.13) \quad |f_2^{\varepsilon,N}(t)| \le C\varepsilon^2[1 + \log(|z(\frac{t}{\varepsilon^2})| + C)]^2.$$

Henceforth, we will give only an outline of the details, which can all be filled in via the estimates and techniques developed above. It can be shown that $f_2^{\varepsilon,N}(\cdot) \in \mathscr{D}(\hat{A}^{\varepsilon,N})$ and that

$$(4.14)\qquad \hat{A}^{\varepsilon,N}f_2^{\varepsilon,N}(t) = \text{negative of first term of (4.6)} + A_0^{\varepsilon,N}f(v^{\varepsilon}(t),t)$$

$$+ \text{ (terms whose } \underset{\substack{\varepsilon\to 0\\ \alpha\to 0}}{\text{p-lim}} \text{ equal zero).}$$

The term whose p-lim = 0 is just $(f_{2,v}^{\varepsilon,N}(t))'\dot{v}^{\varepsilon}(t)$, where $f_{2,v}^{\varepsilon,N}$ is the gradient of the expression for $f_2^{\varepsilon,N}$ with respect to the argument $v^{\varepsilon}(t)$. The components of $\hat{A}^{\varepsilon,N}f_2^{\varepsilon,N}$ which involve f_{vvv} are bounded by $O(\varepsilon)$. Loosely speaking, the remaining component is of the form

$$(4.15)\qquad o(\varepsilon) + \varepsilon\iint [E_t^{\varepsilon,N}f_{vv}\bar{g}_{\alpha,v}g_{\alpha} + E_t^{\varepsilon,N}f_{vv}\bar{g}_{\alpha}g_{\alpha,v} - E\, f_{vv}\bar{g}_{\alpha,v}g_{\alpha}$$

$$- E\, f_{vv}\,\bar{g}_{\alpha}g_{\alpha,v}]d\tau d\rho \cdot g_{\alpha},$$

where we omit the function arguments. By a method similar to that used to get (4.13), we get the bound (4.13) on (4.15) but with (ε/α) replacing ε^2.

Part 4. The estimates obtained in Parts 1 - 3 imply that

$$\underset{\substack{\varepsilon\to 0\\ \alpha\to 0}}{\text{p-lim}} \left|f^{\varepsilon}(t)-f(v^{\varepsilon}(t),t)\right| = 0,$$

$$\underset{\substack{\varepsilon\to 0\\ \alpha\to 0}}{\text{p-lim}} \Big|\hat{A}^{\varepsilon,N}f^{\varepsilon}(t)-f_t(v^{\varepsilon}(t),t) - L\sqrt{2/\pi}\,\frac{(s(t)-G(v^{\varepsilon}(t)))}{\sigma}\,D'f_v(v^{\varepsilon}(t),t)$$

$$- A_0^{\varepsilon,N}f(v^{\varepsilon}(t),t)\Big| = 0.$$

A proof very similar to that in ([5], Section 6, part 2) yields* that $A_0^{\varepsilon,N}f(v,t) \to D'f_{vv}(v,t)D(\ln 2)/a$ uniformly in v for each t. In calculating the limit, the

*One of the reasons for the choice $\mathrm{cov}[z(0),z(t)] = \sigma^2\exp -\alpha\tau$ is to allow us to save work by using this result. The choice allowed an explicit evaluation of the diffusion term. With other choices the diffusion coefficient would be left in an "integral" form.

$G(\cdot)$, $s(\cdot)$ play no role and the limit ($\varepsilon \to 0$, $\alpha \to 0$) is the same as for the case ($\alpha = 0$, $\varepsilon \to 0$). If the $b_N(v)$ terms were retained, the result would be the same, except that either b_N or b_N^2 would multiply the f_v, f_{vv} or f_{vvv}. By what has just been said

$$(4.16) \qquad \underset{\substack{\varepsilon\to 0\\ \alpha\to 0}}{\text{p-lim}} \left|\hat{A}^{\varepsilon,N} f^{\varepsilon,N}(t) - \left(\frac{\partial}{\partial t} + A\right) f(v^{\varepsilon}(t),t)\right| = 0,$$

where A is the infinitesimal operator of $v(\cdot)$ in (1.2). If b_N were retained, the A in (4.16) would be replaced by some A^N which would equal A where $b_N(\cdot) = 1$, i.e. in S_N. Thus, by Theorem 1, if $\{v^{\varepsilon,N}(\cdot)\}$ were tight, then the proof would be completed.

<u>Tightness</u>. Use ([2], Theorem 2). The conditions of Theorem 2 [2] hold if (4.17) holds for each N and $T < \infty$:

$$(4.17) \qquad \lim_{K\to\infty} \overline{\lim_{\substack{\varepsilon\to 0\\ \alpha\to 0}}} P\{\sup_{t\le T} |\hat{A}^{\varepsilon,N} f^{\varepsilon,N}(t)| \ge K\} = 0,$$

$$\lim_{\substack{\varepsilon\to 0\\ \alpha\to 0}} P\{\sup_{t\le T} |f_1^{\varepsilon,N}(t) + f_2^{\varepsilon,N}(t)| \ge \delta\} = 0, \qquad \text{each } \delta > 0.$$

But (4.17) follows from (4.10), (4.13) (and a similar estimate for (4.15), and the fact that the Gaussianness and stationarity imply that for any $\gamma > 0$,

$$\lim_{\varepsilon\to 0} \sup_{t\le T} \varepsilon^{\gamma} |z(t/\varepsilon^2)| = 0 \qquad \text{w.p. 1.} \qquad \text{Q.E.D.}$$

References

1. H.J. Kushner, "Jump-diffusion approximations for ordinary differential equations with random right-hand sides", SIAM J. on Control and Optimization, 17, 729-744, 1979.

2. H.J. Kushner, "A martingale method for the convergence of a sequence of processes to a jump-diffusion process", to appear Z. Wahrscheinlichkeitsteorie.

3. G. Blankenship, G.C. Papanicolaou, "Stability and control of stochastic systems with wide-band noise disturbances", SIAM J. on Applied Math., 34, 437-476, 1978.

4. G.C. Papanicolaou, W. Kohler, "Asymptotic theory of mixing ordinary differential equations", Comm. Pure and Appl. Math., 27, 641-668, 1974.

5. H.J. Kushner, "Diffusion approximations to output processes of nonlinear systems with wide-band inputs and applications to communication theory", to appear IEEE Trans. on Information Theory.

6. P. Billingsley, Convergence of probability measures, John Wiley & Sons, New York, 1968.

7. T.G. Kurtz, "Semigroups of conditional shifts and approximation of Markov processes", Ann. Prob., 4, 618-642, 1975.

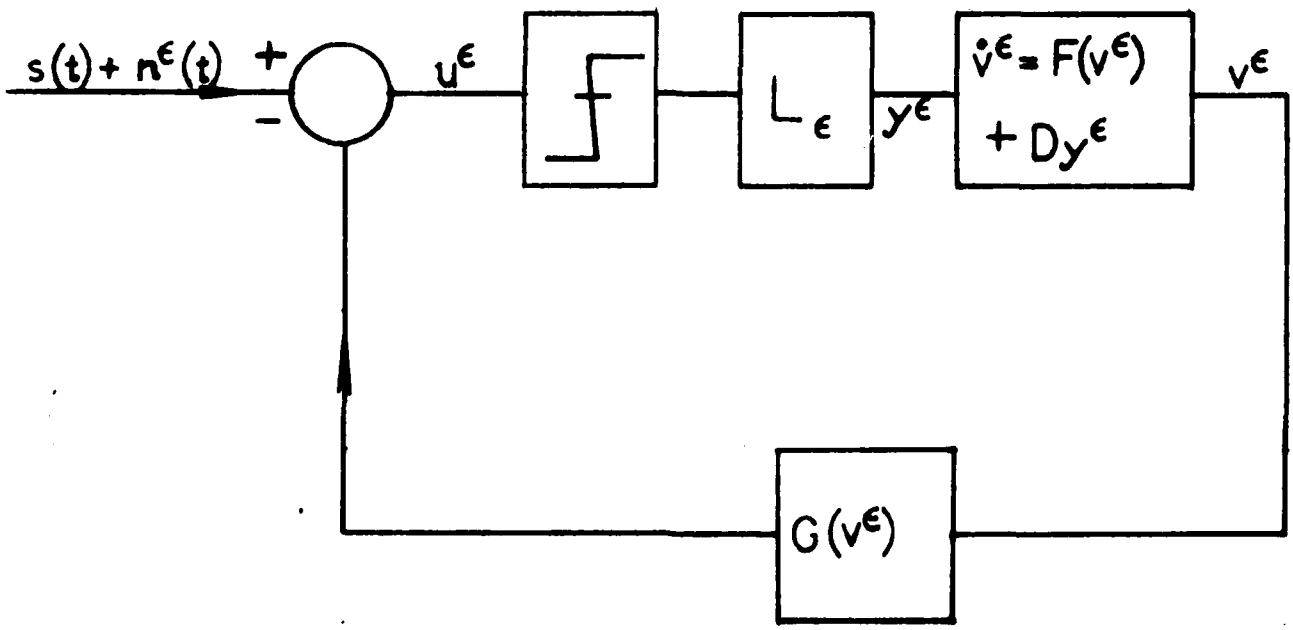

FIG.1. THE NONLINEAR SYSTEM WITH A SATURATOR

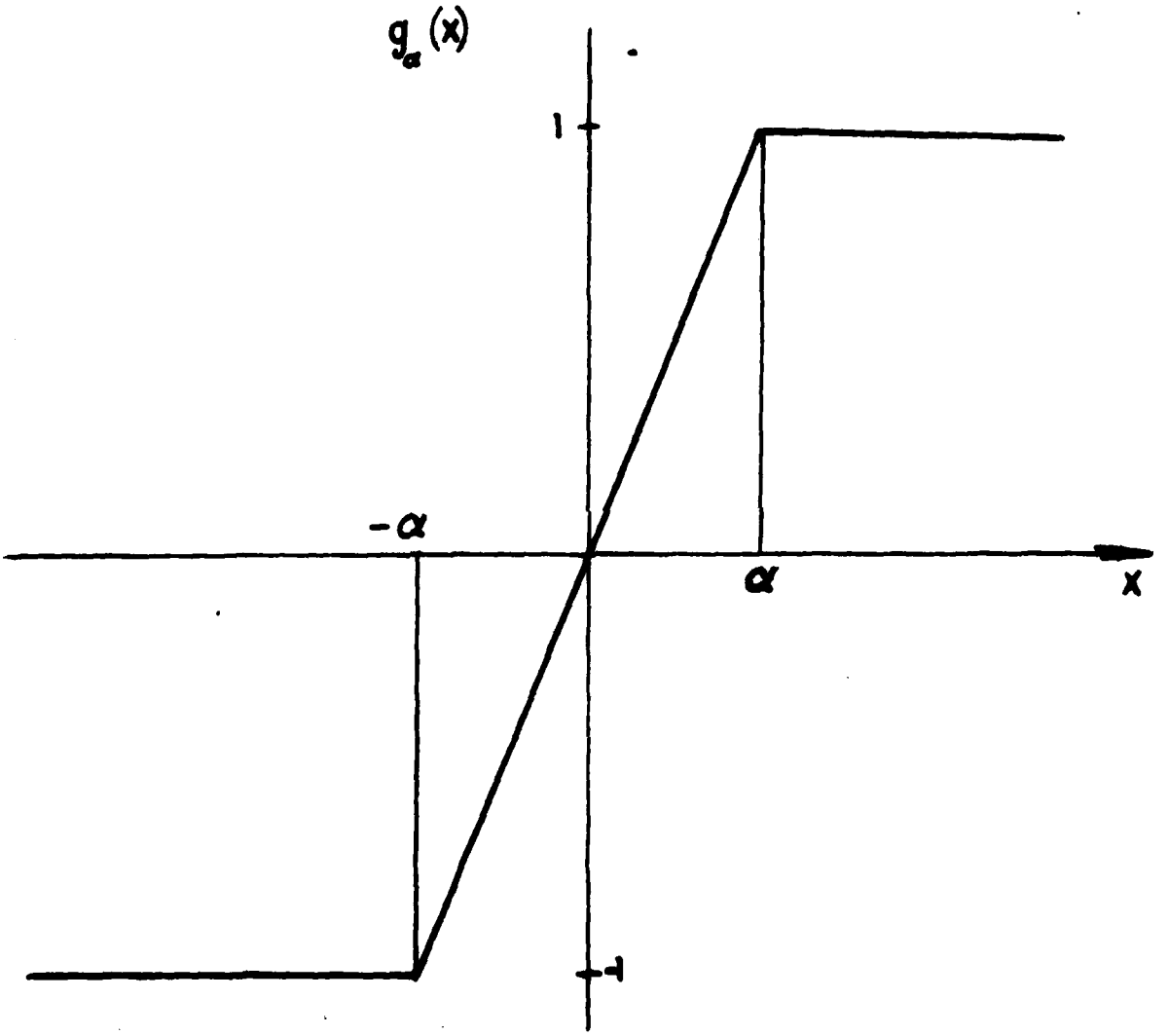

FIG.2. THE APPROXIMATE SATURATOR

END

DATE
FILMED

9-80

DTIC