AD-A087 552 HARRY DIAMOND LABS ADELPHI MD F/G 17/2

THE LSR/2 OPTICALLY COUPLED SIGNAL TRANSMISSION LINK.(U)

DEC 79 J C BLACKBURN

UNCLASSIFIED HDL-TM-79-24 NL

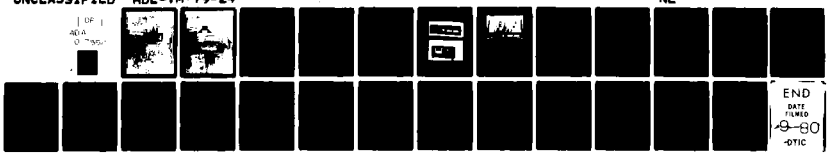

ADA087552

UNCLASSIFIED

SECURITY CLASSIFICATION OF THIS PAGE (When Data Entered)

REPORT DOCUMENTATION PAGE

READ INSTRUCTIONS BEFORE COMPLETING FORM

(14) 1. REPORT NUMBER: HDL-TM-79-24

2. GOVT ACCESSION NO.: AD-A087 552

3. RECIPIENT'S CATALOG NUMBER:

(6) 4. TITLE (and Subtitle): The LSR/2 Optically Coupled Signal Transmission Link

5. TYPE OF REPORT & PERIOD COVERED: July 1978 to March 1979 Technical Memorandum

6. PERFORMING ORG. REPORT NUMBER:

(10) 7. AUTHOR(s): James C. Blackburn (12) 25

8. CONTRACT OR GRANT NUMBER(s): (11) Dec 79

9. PERFORMING ORGANIZATION NAME AND ADDRESS:
Harry Diamond Laboratories
2800 Powder Mill Road
Adelphi, MD 20783

10. PROGRAM ELEMENT, PROJECT, TASK AREA & WORK UNIT NUMBERS:
Program Ele: 62710H

11. CONTROLLING OFFICE NAME AND ADDRESS:
Director
Defense Nuclear Agency
Washington, DC 20305

12. REPORT DATE: December 1979

13. NUMBER OF PAGES: 25

14. MONITORING AGENCY NAME & ADDRESS (if different from Controlling Office):
(9) Technical memo
Jul 78 - Mar 79

15. SECURITY CLASS. (of this report): UNCLASSIFIED

15a. DECLASSIFICATION/DOWNGRADING SCHEDULE:

16. DISTRIBUTION STATEMENT (of this Report):

Approved for public release; distribution unlimited.

17. DISTRIBUTION STATEMENT (of the abstract entered in Block 20, if different from Report):

18. SUPPLEMENTARY NOTES

HDL Project: 257923
DRCMS Code: 36AA600062710
This work was sponsored by the Defense Nuclear Agency under Subtask XX959, Work Unit 2.

19. KEY WORDS (Continue on reverse side if necessary and identify by block number)

Optical signal link	Modal noise
Optical data link	Analog fiber-optic link
Fiber optics	Dielectric transmission
Laser	

20. ABSTRACT (Continue on reverse side if necessary and identify by block number)

The design is presented for a fiber-optic transmission system intended for carrying analog instrumentation signals over a 1-km length of single fiber. The bandwidth (±3 dB) is 5 kHz to 220 MHz with a dynamic range of ~35 dB. Special attention is given to minimizing the modal noise produced by the single-mode laser source.

DD FORM 1 JAN 73 1473 EDITION OF 1 NOV 65 IS OBSOLETE

UNCLASSIFIED 163050

SECURITY CLASSIFICATION OF THIS PAGE (When Data Entered)

PRECEDING PAGE BLANK-NOT FILMED

CONTENTS

Page

1. INTRODUCTION 5

2. SYSTEM DESCRIPTION 5

3. SPECIFICATIONS 7

4. TRANSMITTER CIRCUITRY 8

4.1 Laser Stabilization 8
4.2 Calibrator 11
4.3 Remote Control 11

5. OPTICAL RECEIVER CIRCUITRY 12

6. MODAL NOISE REDUCTION 14

7. FIBER-OPTIC CABLE 16

8. CONCLUDING REMARKS 17

LITERATURE CITED 18

DISTRIBUTION 19

FIGURES

1 External views of (a) laser transmitter and (b) optical receiver 6

2 Internal view of laser transmitter 7

3 Laser temperature control and temperature monitor circuitry 10

4 Laser optical output stabilizer 10

5 100-MHz stable sine-wave generator 11

6 Optical control circuitry 12

7 Optical receiver 13

8 Current dependence of peak wavelength (data for ML-2205F laser, reproduced from Mitsubishi specifications) 15

1. INTRODUCTION

The LSR/2 Fiber-Optic System is intended as a first step in providing a tractable signal transmission system to replace long runs of expensive unwieldy coaxial cable, as well as providing other benefits such as immunity from electromagnetic interference. The flat frequency characteristic of modern optical fiber makes it unnecessary to provide equalization, save for a modest amount built permanently into the electronics of the receiver and transmitter. The convenience of the fiber optics is evident from the fact that a cable containing six individual 1-km-long fibers, each capable of nearly flat frequency response to several hundred megahertz, is packaged on a spool which can be lifted by one man.

As can be seen in figures 1 and 2 (p 6 and p 7) no attempt was made to minimize either the physical size or the power requirements of the LSR/2. To do this was not a requirement for the present application, and it was felt that serviceability and adaptability would be enhanced if a convenient physical assembly were employed. It is expected that additional functions and features will be found desirable as experience is accumulated in the application of this system: the extra "real estate" will probably enable these to be added on inside the original cabinets.

Although at least one commercial source offers a package consisting of laser, thermoelectric cooler, and intensity stabilizer, in our tests it was not clear that this package offered all the desired design features; with the modular construction of the LSR/2 it will be possible to retrofit improved lasers without having to replace other portions of the system. At the time of writing (April 1979), the Mitsubishi ML-2205F was being used.

2. SYSTEM DESCRIPTION

The basic concept of the LSR/2 is extremely simple: a cw laser diode is biased to an optimum value for linearity and modulated by the applied signal. This amplitude-modulated light signal is then transmitted to a remote point by an optical fiber. The signal is then detected and demodulated by a silicon diode, amplified, and made available at an output connector.

The laser must be carefully selected and individually tested to determine its actual dynamic operating characteristics. It must then be maintained at a constant (optimum) operating point by optical feedback, temperature control, or both (the LSR/2 employs both). At the receiving end, the silicon detector must be temperature stabilized. Throughout the system, the circuitry must be wideband and also provide substantial gain. In addition to this, some nonbasic functions such as remote

control, calibration, and self-check are provided to allow for convenient use. The LSR/2 incorporates a recently devised means of decreasing the modal noise which is created when coherent sources are transmitted through multimode fibers.

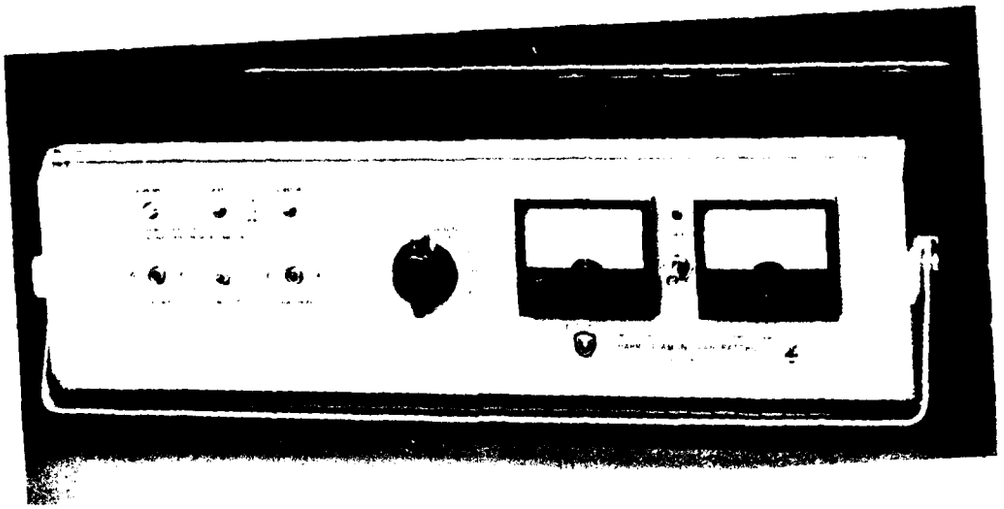

(a)

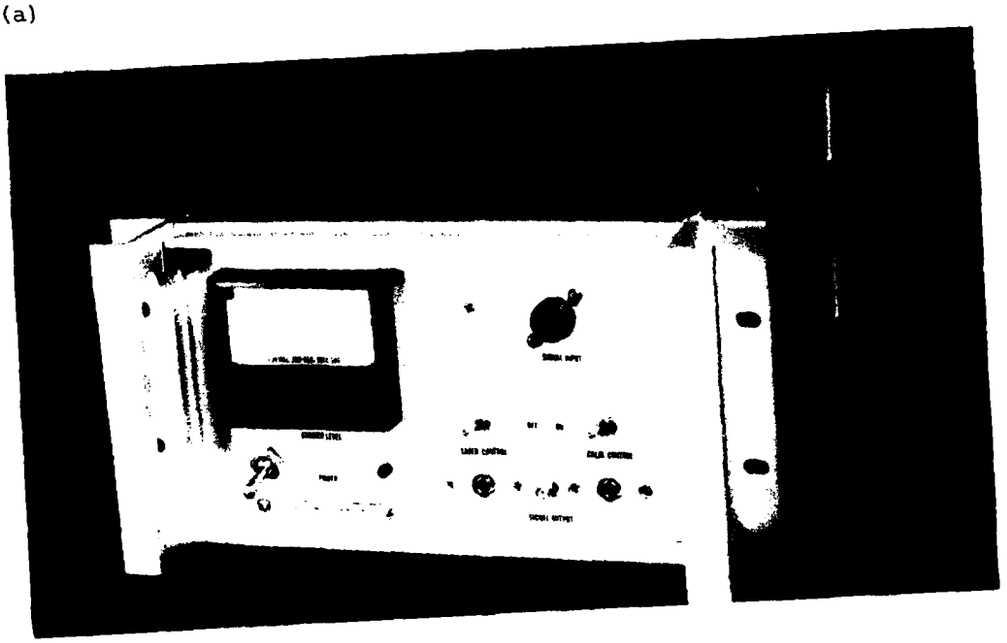

(b)

Figure 1. External views of (a) laser transmitter and (b) optical receiver.

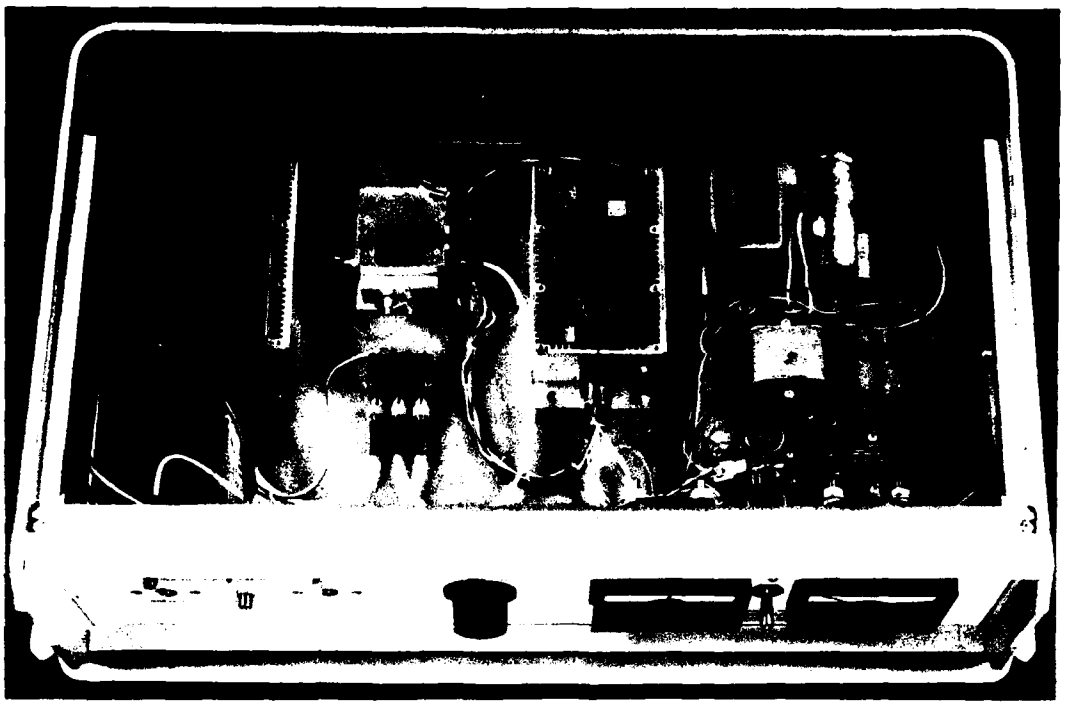

Figure 2. Internal view of laser transmitter.

3. SPECIFICATIONS

The LSR/2 is designed to transmit analog signals within the limits of approximately ±0.3 V; the exact limits vary from unit to unit and are specified in the individual calibration data. Digital signals may also be transmitted, but a shift in operating bias is desirable if only digital use is desired. The bandwidth is at least from 5 kHz to 200 MHz (-3 dB points) for a transmission distance of 1 km.

The dynamic range is greater than 30 dB, defined as follows: the lower signal level is that which produces a 1:1 signal to noise ratio (S/N), as determined by the tangential method;[1] the upper signal level is that where the harmonic content is as many decibels below the fundamental as the fundamental is above the level producing the 1:1 S/N.

System gain is approximately 1. The gain may at any time be determined to an accuracy of 1 dB by energizing the calibrator (see sect. 4.2). The system inverts the signal being transmitted. This is easily

[1] *G. Franklin and T. Hatley, Noise Measurement, Electronic Design, 24 (22 November 1973), 184.*

contended with by the use of the inverting switch which appears on the oscilloscope vertical deflection plug-in. Where this is not feasible, a wideband (transmission-line wound) inverting transformer may be used at either the receiver or transmitter.

A calibrator is an integral part of the signal transmitter and can be energized either by the control on the transmitter front panel or (via the optically coupled remote control) by the control on the receiver panel. When the calibrator is operated, a coaxial switch disconnects the transmitter's input from the front-panel input connector and instead connects it to a 100-MHz sine-wave oscillator which is stable ±1 dB and has a harmonic content of -30 dB or better.

The LSR/2 system is intended for use in a laboratory temperature range of 10 to 35 C. Where required, this temperature range can be considerably extended by modification of the system. Operation of the transmitter in areas of very high humidity may cause difficulty from water condensation on the laser (which is temperature controlled at about 25 C). If operation in such environments is necessary, the unit can be modified either by raising the laser temperature (with possibly some sacrifice in S/N) or by hermetically sealing the temperature-controlled laser.

4. TRANSMITTER CIRCUITRY

4.1 Laser Stabilization

A laser is used as the transmitting element in the LSR/2. It produces an optical output which serves as the carrier, and this carrier is amplitude modulated by the input signal. The single-mode laser used in this system has a highly linear light-output versus current-input relationship, making low distortion possible. A seemingly desirable consequence of the structure of the single-mode laser--its very narrow spectral line width--actually exacerbates problems such as modal noise which result from interference between the various modes propagating in a multimode fiber. It must be emphasized that these undesirable interference effects should not be looked upon as malfunctions of the laser; instead they are created in the optical fiber and its connectors as a result of the coherence of even a perfectly normal single-mode laser. Section 6 discusses some aspects of the problem of controlling modal noise in the system.

To obtain maximum linearity it has been found necessary to measure the actual dynamic characteristics of the individual laser with a test apparatus consisting of a variable-amplitude laser driver, a laser bias and temperature controller, a low-distortion optical receiver, and a spectrum analyzer. The optimum bias current (within a

reasonable portion of the laser's rated drive) and the most favorable temperature (within the range of about 15 to 30 C) are determined by experiment. Although an operating system will certainly be obtained by biasing on the basis of the manufacturer-supplied dc laser curves, a dynamic measurement will determine more accurately the proper levels.

The laser's temperature is held at the optimum temperature by a thermoelectric (Peltier effect) heater/cooler module. Even with thermal stabilization the laser will slowly degrade over thousands of hours so that the optical output for a given current will fall off. A photodiode observes the actual output of the laser and feeds back a signal which increases the current slightly as required to maintain the original intensity.

IC2 and T1 to T6 (fig. 3) control the laser's temperature through the thermoelectric heater/cooler. TH1 and R2 form a voltage divider so that the input to the inverting terminal of IC2 becomes more positive as temperature increases. This voltage is compared with the voltage at the noninverting input, with the result that the voltage out of IC2 equals half the 5.25-V supply voltage when the temperature is correct, becomes more negative when the temperature is high, and more positive when the temperature is low. A more positive voltage turns on T1, T2, and T3. The end result is that the current applied to the heater/cooler assumes a proper polarity and amplitude so as to correct the temperature drift.

IC1 amplifies the output of a separate thermistor and this output drives the monitor panel meter in the 10 C position of the five-position monitor switch.

IC3 and associated circuitry (fig. 4) form the optical stabilizer for the laser. The laser's output is monitored by PIN diode D1, and the PIN's current is balanced against the current through R5. If the laser's intensity decreases, the current through the PIN decreases, causing an increased forward bias to T7. The increased current through T7 increases laser intensity. To avoid the possibility of some transient or malfunction burning out the laser, the voltage drop across R4 and the 100-ohm laser isolation resistor is made high enough that even saturation of T7 will not produce burnout.

IC4, in connection with the monitor meter and the five-position monitor selector switch, allows one to determine whether the intensity regulator is within normal operating range. The meter will indicate at the red reference mark whether the intensity stabilizer is in balance.

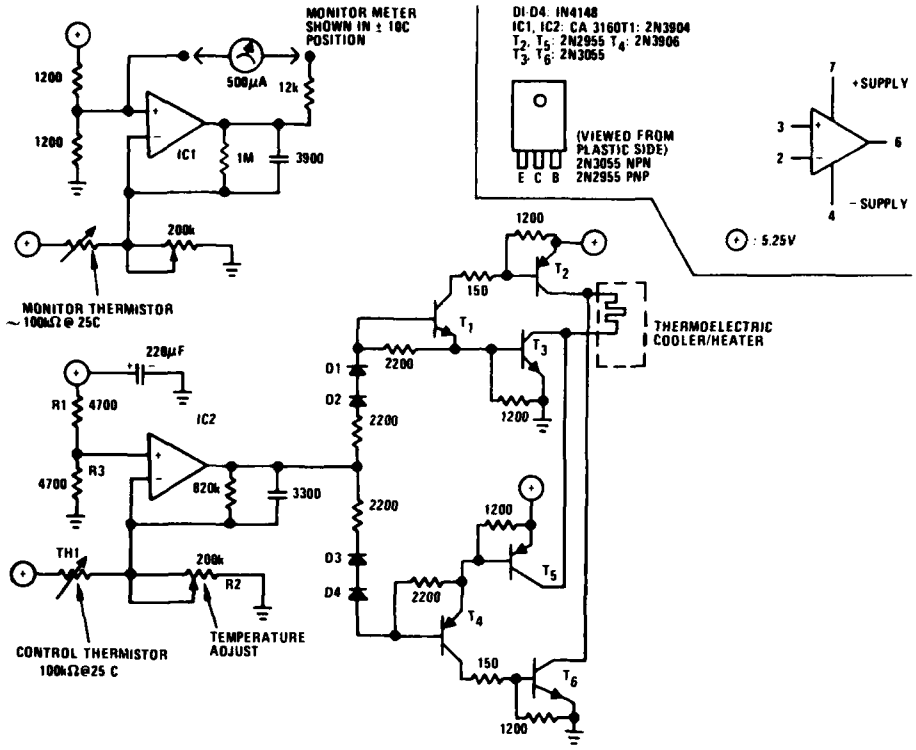

Figure 3. Laser temperature control and temperature monitor circuitry.

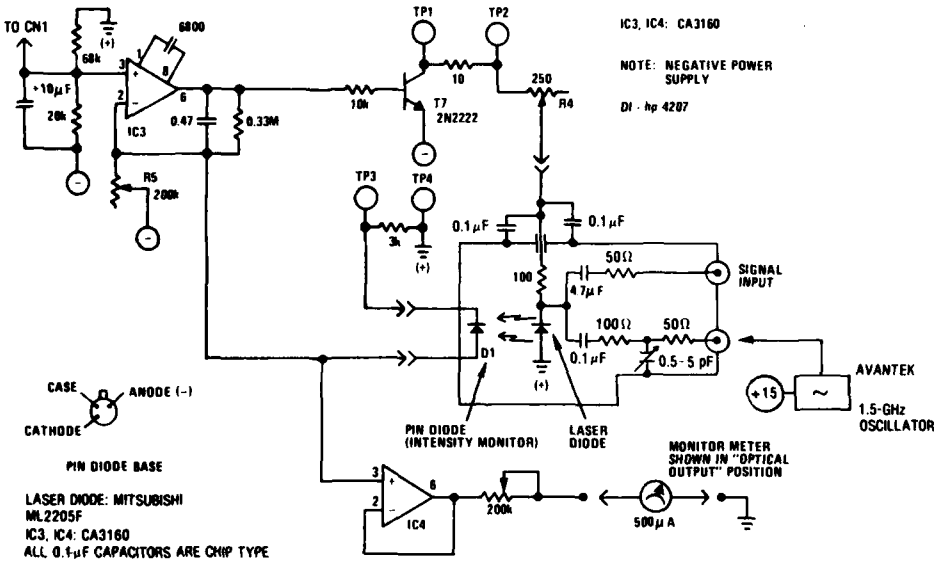

Figure 4. Laser optical output stabilizer.

4.2 Calibrator

Calibration is provided by a stabilized 100-MHz oscillator employing the MC1648 (fig. 5). This IC combines an emitter-coupled oscillator, a buffer amplifier, and feedback stabilization of amplitude. L1-C1 determines frequency and L2-C2 forms the buffer tank, which is tapped to provide an impedance match. R6 allows for level adjustment. To monitor the level of the calibrator it can be disconnected from the coaxial relay (RY1) and fed directly to a 50-ohm scope or spectrum analyzer.

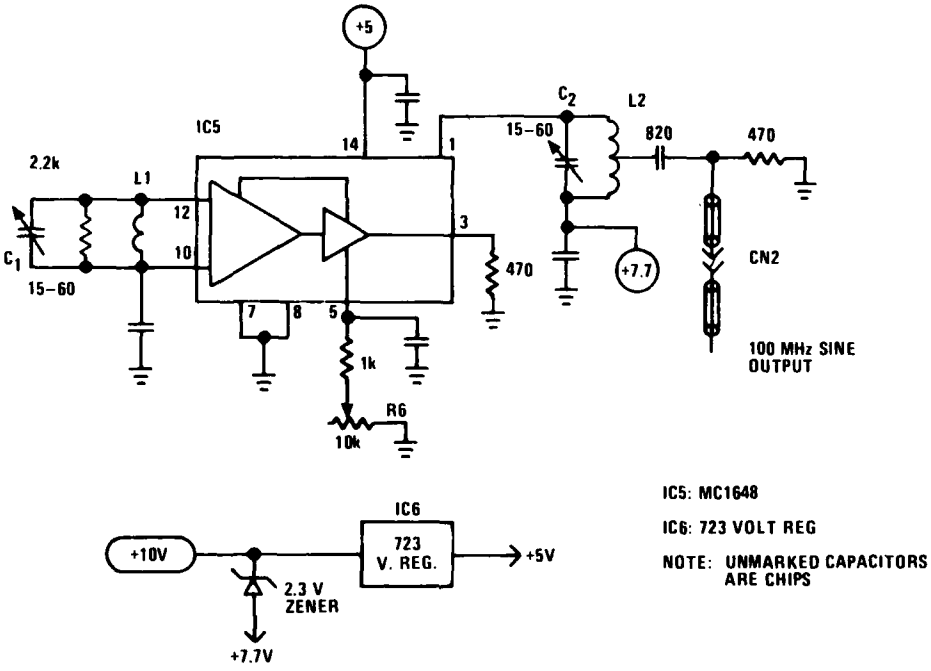

Figure 5. 100-MHz stable sine-wave generator.

4.3 Remote Control

Two PIN diodes, D2 and D3, of figure 6, are mounted on the front panel of the transmitter. The current through the PIN diode appears as a voltage drop across a 1-megohm resistor and is compared to a fixed voltage at the (+) input of IC7 or IC8. When PIN diode D2 is illuminated, the output of IC7 goes low and pulls the (+) input of IC3 low via the line connected to CN-1. This causes the laser current to switch to a low (although not zero) idle current. When D2 is dark, the output of IC7 goes high and D4 disconnects IC7 from IC3.

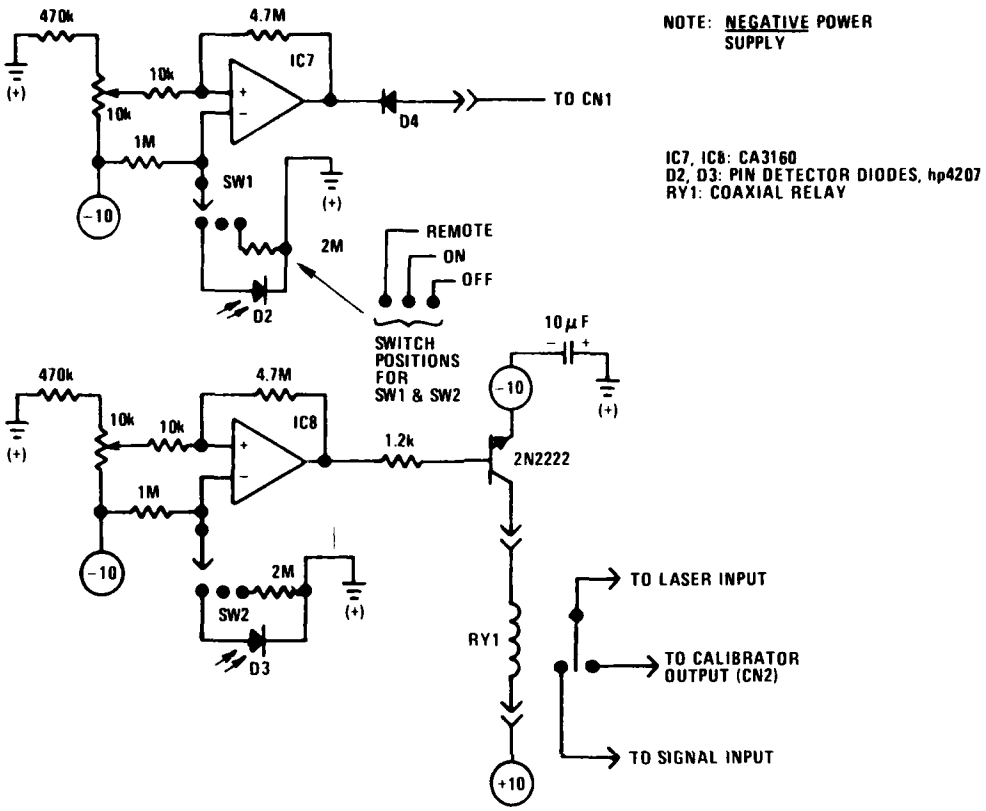

Figure 6. Optical control circuitry.

In similar fashion, D3 and IC8 control the current through RY1, thus connecting the laser input to either the front-panel connector or the output of the calibrator.

5. OPTICAL RECEIVER CIRCUITRY

The optical signal receiver diagrammed in figure 7 consists of an avalanche photodetector which detects and demodulates the amplitude-modulated signal from the laser diode, a power supply and protection circuit for the photodiode, and a wideband signal amplifier of approximately 20× gain. IC10 produces a 2.5-V reference which is compared with the cathode voltage on detector D4 via R9 and R10. IC9 drives T8 sufficiently to pull the required current through R11 and R12 to drop the cathode voltage to the correct value. Z2 drops the collector voltage of T8, thus reducing its dissipation. Thermistor TH1 provides

for an increase in detector voltage as temperature increases; as conduction through TH1 increases (in response to increasing temperature) a higher current is required through R9, thus increasing detector voltage. R8 adjusts the rate of temperature correction.

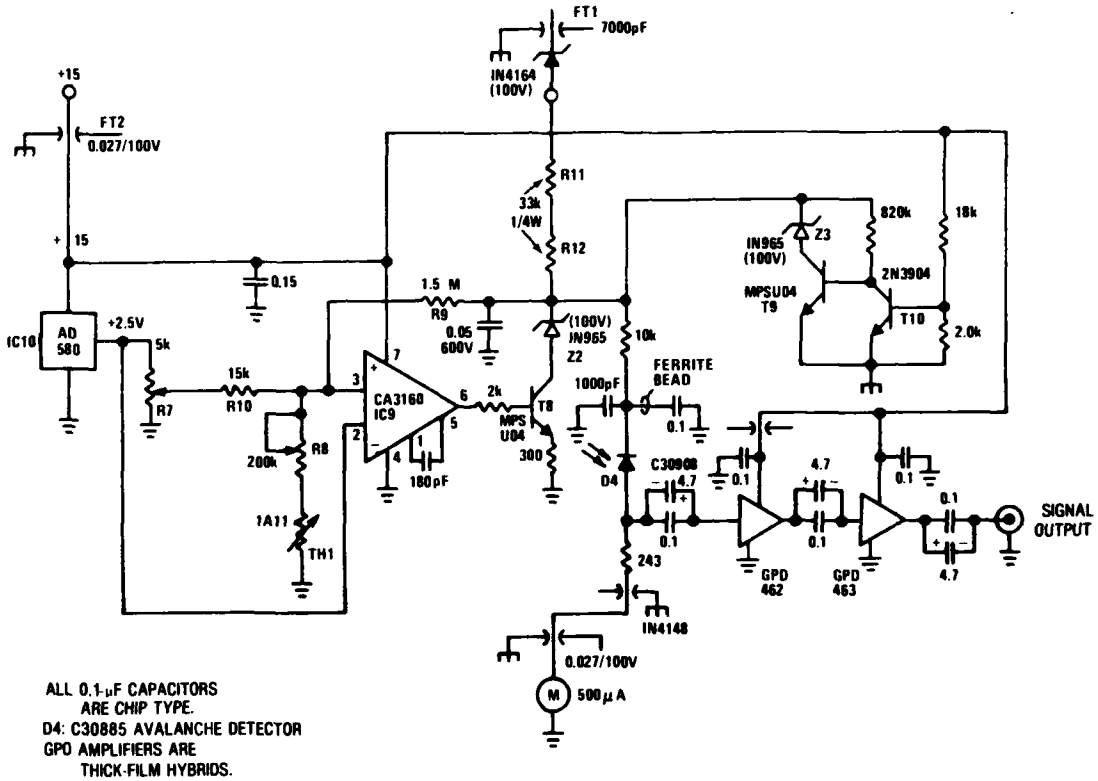

Figure 7. Optical receiver.

If the +15 V supply should fail and the supply voltage to IC9 and IC10 approach levels where the regulation would not function, T10 will go out of conduction and T9 will turn on, crowbarring the detector voltage to 100 V, a safe value under any condition. This protection is necessary since excessive voltage drive to detector D4 can quickly damage it.

The signal amplifier consists of two stages of Avantek Co. GPD amplifiers. The upper bandwidth limit of these devices is over 500 MHz and the lower limit is controlled by the coupling capacitors. The laser produces enough optical power that the signal reaching the detector is large (~50 μW) even after passing through 1 km of fiber and several

connectors. A 15-percent transmission filter is placed between the detector and the fiber to limit current to a safe level while the detector voltage (and consequently gain) is great enough to provide reach-through and high-frequency operation. The large signal makes a low-noise front end (such as the typical transimpedance design) unnecessary. The shot noise and excess noise contributions of the avalanche detector are greater in this analog-modulated system than in typical digital systems; this is because a "weak signal" is really a small variation superimposed on a much larger dc background signal. A large background increases both types of noise.[2]

The receiver cabinet also contains two LED's and their associated current-limit resistors and switches for the purpose of sending the remote-control signals through the fiber-optic control lines to the PIN diodes D2 and D3 of figure 5.

6. MODAL NOISE REDUCTION

As Epworth points out,[3] modal noise occurs when the constantly varying speckle pattern produced in the fiber by interference between fiber modes is passed through a mode selective mechanism such as a misaligned fiber butt-joint. In any real system the speckle constantly varies in response to many variables, such as change of laser wavelength in response to laser temperature changes in response to modulation current, mode jumps in the laser in response to modulation, and changes in mode structure in the fiber in response to pressure, flexure, vibration, etc. To minimize modal noise, several approaches are possible, including minimizing the number of fiber joints, making these joints as non-mode-selective as possible, and decreasing the coherence of the laser source in order to minimize interference among fiber modes.

In the LSR/2 only one fiber-to-fiber joint is used, the one on the front panel of the transmitter. This joint connects the fiber pigtail which is integral with the ML2205F laser to the 1-km transmission fiber. Several types of butt-type connectors and a Deutsch* lens-type connector were tried at this location; the experiments convinced us that the Deutsch connector was less conducive to modal noise than any of the butt-type connectors. This is probably because the lens system in the Deutsch connector was designed to conserve not only optical power but

---

[2] *H. Melchior and W. Lynch, Signal and Noise Response of High Speed Germanium Photodiodes, IEEE Trans. Electron Devices, ED-13 (1966), 829.*

[3] *R. Epworth, Phenomenon of Modal Noise in Fiber Systems, Paper ThD1, OSA Meeting, Washington, DC (8 March 1979).*

**Manufactured by the Deutsch Electronic Components Division, Banning, CA.*

also the optical mode structure.[4] Assuming such mode conservation, the undesirable mode selection mechanism is reduced or eliminated.

At the receiving end of the link, the fiber's end is simply directly mated to the window of the optical detector (with the 15-percent transmission filter interposed). It was found that an avalanche detector which was fitted with an integral short length of optical fiber (a few millimeters) at the input increased modal noise; this is no doubt due to the mode-selective character of typical butt-joints.

A novel technique,[5] experimentally found to decrease modal noise and presumed to operate by decreasing the laser's coherence, is used to further decrease modal noise problems. A signal of about 2 GHz is applied to the laser along with the signal to be transmitted. This signal constantly drives the laser back and forth across a significant portion of its modulation range, presumably constantly dithering the frequency, as suggested by figure 8, and thus decreasing coherence. This modulation frequency is sufficiently high that the receiver has no response and thus responds to the average value, which is set by the modulation signal applied to the input connector.

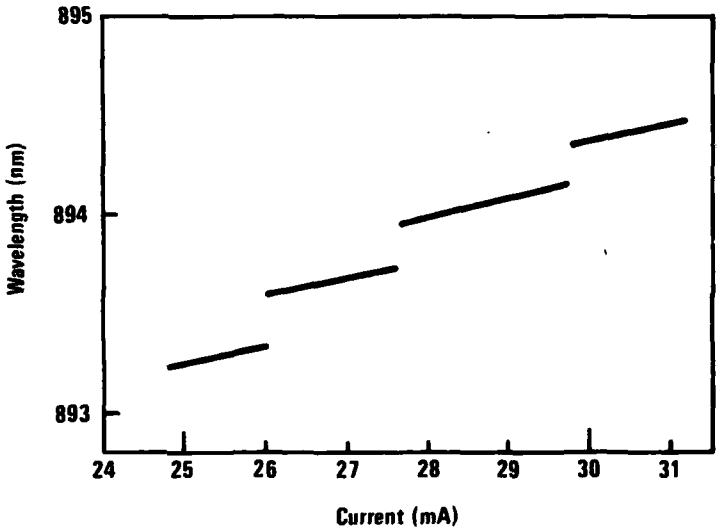

Figure 8. Current dependence of peak wavelength (data for ML-2205F laser, reproduced from Mitsubishi specifications).

[4] *M. Holzman, A Detachable Connector for Multimode Graded Index Optical Waveguides, Deutsch Company, Electronic Components Division, Technical Reprint No. 136 (1979).*

[5] *J. Vanderwall and J. Blackburn, The Suppression of Some Artifacts of Modal Noise in Fiber Optic Systems, Optics Letters, 4, 9 (September 1979), 295.*

7. FIBER-OPTIC CABLE

For a transmission distance as great as 1 km the practical choice of possible fiber types is restricted to the graded-index type. Fibers such as PCS (plastic-clad silica) have both loss and dispersion too great to maintain signal strength and bandwidth. Step-index silica fibers have losses similar to graded-index silica, but the dispersion is too great to maintain bandwidth.

Single-mode fibers have the potential for almost limitless bandwidth, but at present are intractable for this type of application. The laser-to-fiber coupling losses are high, and there is considerable difficulty in maintaining the single-mode structure when demountable connectors and severe microbends (induced in laying the flexible cable) are present. Epworth points out that one of the worst possible conditions for modal noise is that where a "single-mode" fiber begins to support two modes which interfere.

High-quality graded-index fibers having a diameter consistent with the laser's fiber pigtail and the Deutsch connectors are available from a number of manufacturers, although the Corning product was used for testing purposes. Several companies who do not themselves make fibers do assemble fiber cables. The net result is that almost any combination of optical fibers, conductors, strength members, armor, etc, is available.

The operating temperature for all-glass fibers is very wide; the operating temperature for a fiber cable (one or more fibers along with their protective sheaths and strength members) is determined by the cabling materials and methods. With suitable cabling techniques (and no doubt some trade-offs) temperature from near cryogenic to several hundred degrees Celsius can be accommodated.

The breaking strength of fibers is exceedingly high (on a cross-sectional basis), but the small cross section means that a bare fiber can be broken fairly easily--the result, again, is that the cable strength is determined by cabling methods. The commonly used plastic and glass cables have a size somewhat less than, a weight much less than, and a breaking resistance (in our experience) similar to that of RG-58. These cables are also at least as flexible as the coaxial cable.

It is well known that fibers are susceptible to radiation damage; it is less appreciated that the frequently used "decibel of transmission loss per meter per rad" specification ignores important dose-rate effects. Data obtained in our laboratory, which provide a continuous subnanosecond-resolution measure of fiber loss before, during, and after a short radiation pulse, have shown that there is no direct relationship between magnitudes of short-term and long-term fiber responses. It is

therefore necessary to make certain that the correct fiber loss values, long-term or prompt, are used in fiber selection.

In addition to causing increased fiber loss, radiation causes the fiber to emit light produced by Cerenkov radiation; this light can be a serious source of noise (and in some instances can completely obscure the optical signal). Blackburn[6] cites the use of optical filters to substantially reduce the noise produced in the optical receiver by the luminescence.

8. CONCLUDING REMARKS

The LSR/2 extends the advantages of fiber-optic transmission to analog signalling over a wide bandwidth; the most serious limitation is the 30 to 35 dB dynamic range. The dynamic range, in spite of careful design, is limited primarily by the modal noise which forms the noise floor. It is hoped that optical sources, presumably lasers, will be developed which provide the highly linear response of present-day single-mode lasers while having less coherence (and therefore less tendency to excite modal noise). The transmission properties of optical fibers continue to improve and the price to decrease; this, along with handling ease and freedom from noise and TEMPEST effects, continues to make optical transmission increasingly attractive.

---

[6] *J. Blackburn, A Radiation-Hardened Fiber Optic Transmission System Having a 400-MHz Bandwidth and Linear Response, IEEE Trans. Instrum. Meas., IM-26, 1 (March 1977), 64.*

LITERATURE CITED

(1) G. Franklin and T. Hatley, Noise Measurement, Electronic Design, 24 (22 November 1973), 184.

(2) H. Melchior and W. Lynch, Signal and Noise Response of High Speed Germanium Photodiodes, IEEE Trans. Electron Devices, ED-13 (1966), 829.

(3) R. Epworth, Phenomenon of Modal Noise in Fiber Systems, Paper ThD1, OSA Meeting, Washington, DC (8 March 1979).

(4) M. Holzman, A Detachable Connector for Multimode Graded Index Optical Waveguides, Deutsch Company, Electronic Components Division, Technical Reprint No. 136 (1979).

(5) J. Vanderwall and J. Blackburn, The Suppression of Some Artifacts of Modal Noise in Fiber Optic Systems, Optics Letters, 4, 9 (September 1979), 295.

(6) J. Blackburn, A Radiation-Hardened Fiber Optic Transmission System Having a 400-MHz Bandwidth and Linear Response, IEEE Trans. Instrum. Meas., IM-26, 1 (March 1977), 64.

DISTRIBUTION

ADMINISTRATOR
DEFENSE DOCUMENTATION CENTER
ATTN DDC-TCA (12 COPIES)
CAMERON STATION, BUILDING 5
ALEXANDRIA, VA 22314

COMMANDER
US ARMY RSCH & STD GP (EUR)
ATTN LTC JAMES M. KENNEDY, JR.
CHIEF, PHYSICS & MATH BRANCH
FPO NEW YORK 09510

COMMANDER
US ARMY MATERIEL DEVELOPMENT &
READINESS COMMAND
ATTN DRXAM-TL, HQ TECH LIBRARY
ATTN DRCDE, DIR FOR DEV & ENGR
ATTN DRCDE-R, SYSTEMS EVALUATION
& TESTING
ATTN DRCCE, DIR FOR COMMUNICATIONS-
ELECTRONICS
ATTN DRCBSI, DIR FOR BATTLEFIELD
SYS INTEGRATION
5001 EISENHOWER AVENUE
ALEXANDRIA, VA 22333

COMMANDER
US ARMY ARMAMENT MATERIEL
READINESS COMMAND
ATTN DRSAR-LEP-L, TECHNICAL LIBRARY
ROCK ISLAND, IL 61299

COMMANDER
US ARMY MISSILE & MUNITIONS
CENTER & SCHOOL
ATTN ATSK-CTD-F
REDSTONE ARSENAL, AL 35809

DIRECTOR
US ARMY MATERIEL SYSTEMS ANALYSIS ACTIVITY
ATTN DRXSY-MP
ATTN DRXSY-CC, COMM & ELECTRONICS
ABERDEEN PROVING GROUND, MD 21005

DIRECTOR
US ARMY BALLISTIC RESEARCH LABORATORY
ATTN DRDAR-TSB-S (STINFO)
ABERDEEN PROVING GROUND, MD 21005

TELEDYNE BROWN ENGINEERING
CUMMINGS RESEARCH PARK
ATTN DR. MELVIN L. PRICE, MS-44
HUNTSVILLE, AL 35807

ENGINEERING SOCIETIES LIBRARY
345 EAST 47TH STREET
ATTN ACQUISITIONS DEPARTMENT
NEW YORK, NY 10017

U.S. ARMY ELECTRONICS TECHNOLOGY
AND DEVICES LABORATORY
ATTN DELET-DD
FORT MONMOUTH, NJ 07703

BROOKHAVEN NATIONAL LABORATORY
ASSOCIATED UNIVERSITIES, INC.
ATTN PHYSICS DEPT
UPTON, LONG ISLAND, NY 11973

AMES LABORATORY (ERDA)
ATTN NUCLEAR SCIENCE CATEGORY
IOWA STATE UNIVERSITY
AMES, IA 50011

DEPARTMENT OF COMMERCE
NATIONAL BUREAU OF STANDARDS
ATTN LIBRARY
WASHINGTON, DC 20234

DEPARTMENT OF COMMERCE
NATIONAL BUREAU OF STANDARDS
CENTER FOR RADIATION RESEARCH
WASHINGTON, DC 20234

INSTITUTE FOR TELECOM SCIENCES
NATIONAL TELECOMMUNICATIONS &
INFO ADMIN
ATTN J. HULL
BOULDER, CO 80303

DEPARTMENT OF COMMERCE
NATIONAL OCEANIC & ATMOSPHERIC
ADMINISTRATION
ATTN ENVIRONMENTAL RESEARCH LABS
ROCKVILLE, MD 20852

US ENERGY RESEARCH & DEVELOPMENT
ADMINISTRATION
ATTN ASST ADMIN FOR NUCLEAR ENERGY
ATTN DIV OF COMMUNICATIONS
& COMPUTER OPERATIONS
ATTN OFFICE OF TECHNICAL INFORMATION
WASHINGTON, DC 20545

DIRECTOR
DEFENSE ADVANCED RESEARCH
PROJECTS AGENCY
ATTN DIR, NUCLEAR MONITORING RES OFFICE
ATTN DIR, TECHNOLOGY ASSESSMENTS OFFICE
ATTN DR. SHERMAN KARP
ARCHITECT BLDG
1400 WILSON BLVD
ARLINGTON, VA 22209

DIRECTOR
DEFENSE COMMUNICATIONS AGENCY
ATTN TECH LIBRARY
WASHINGTON, DC 20305

DISTRIBUTION (Cont'd)

DIRECTOR
DEFENSE COMMUNICATIONS AGENCY
COMMAND & CONTROL TECHNICAL CENTER
ATTN CHIEF FOR MIL COMMAND SYS
WASHINGTON, DC 20301

DIRECTOR
DEFENSE COMMUNICATIONS ENGINEERING CENTER
ATTN RES & DEV
ATTN TRANS SYS DEV BR
ATTN TECHNICAL LIBRARY
1860 WIEHLE AVE
RESTON, VA 22090

DIRECTOR
DEFENSE INTELLIGENCE AGENCY
ATTN DT-1, NUCLEAR & APPLIED
SCIENCES DIV
ATTN DT-4, ELECTRONICS & COMMAND
& CONTROL DIV
WASHINGTON, DC 20301

CHAIRMAN
OFFICE OF THE JOINT CHIEFS OF STAFF
ATTN J-6, COMMUNICATIONS-ELECTRONICS
WASHINGTON, DC 20301

CHIEF
LIVERMORE DIVISION, FIELD COMMAND, DNA
LAWRENCE LIVERMORE LABORATORY
P.O. BOX 808
LIVERMORE, CA 94550

NATIONAL COMMUNICATIONS SYSTEM
OFFICE OF THE MANAGER
ATTN NCS-TS
WASHINGTON, DC 20305

DIRECTOR
NATIONAL SECURITY AGENCY
ATTN O. D. VAN GUNTEN, R-425
ATTN FRANK LUNNEY
ATTN PAUL SZAEPANCH
ATTN HARRY SOLOMON
ATTN S-65, P. BENSON
ATTN R-13, H. HOEHN, N. GROVE
FORT GEORGE G. MEADE, MD 20755

DIRECTOR
DEFENSE NUCLEAR AGENCY
ATTN RAEV, ELECTRONIC VULNERABILITY
ATTN TITL, LIBRARY
ATTN RAEE, EMP EFFECTS DIVISION
ATTN SPTD, TEST DIVISION
WASHINGTON, DC 20305

COMMANDER
FIELD COMMAND
DEFENSE NUCLEAR AGENCY
ATTN FCSD-A4, TECH REF BR
ATTN FCTMEI, MR. GARTICK
KIRTLAND AFB, NM 87115

UNDER SECRETARY OF DEFENSE
FOR RESEARCH & ENGINEERING
ATTN DEP DIR (TEST & EVALUATION)
ATTN ELECTRONICS & PHYSICAL SCIENCES
WASHINGTON, DC 20301

OFFICE OF THE DEPUTY CHIEF OF STAFF
FOR RESEARCH, DEVELOPMENT,
& ACQUISITION
DEPARTMENT OF THE ARMY
ATTN DAMA-ARZ-A, CHIEF SCIENTIST,
DA & DIRECTOR OF ARMY RESEARCH,
DR. M. E. LASSER
ATTN DAMA-CSS-N, NUCLEAR TEAM
ATTN DAMA-WSW, GROUND COMBAT SYS DIV
WASHINGTON, DC 20310

COMMANDER
US ARMY ARMAMENT RESEARCH AND
DEVELOPMENT COMMAND
ATTN DRCPM-CAWS, CANNON ARTILLERY
WEAPON SYS/SEMIACTIVE LASER
GUIDED PROJECTILES
ATTN DRDAR-SEM, MATERIEL DEV EVAL
ATTN DRDAR-LCN, NUCLEAR APPLICATIONS DIV
ATTN DRDAR-TS, TECHNICAL SUPPORT DIV
DOVER, NJ 07801

COMMANDER
US ARMY AVIATION RESEARCH &
DEVELOPMENT COMMAND
P.O. BOX 209
ATTN DRDAV-E, DIR FOR DEV & ENGR
ATTN DRDAV-N, ADVANCED SYS TECHNOLOGY
INTEGRATION OFFICE
ST LOUIS, MO 63166

COMMANDER
ATMOSPHERIC SCIENCES LABORATORY
ATTN DELAS-BE-C, COMBAT ENVIR BR
WHITE SANDS MISSILE RANGE, NM 88002

BALLISTIC MISSILE DEFENSE PROGRAM
MANAGER OFFICE
ATTN DACS-BMZ-C, DEPUTY DIR
COMMONWEALTH BUILDING
1300 WILSON BLVD
ARLINGTON, VA 22209

COMMANDER
BALLISTIC MISSILE DEFENSE SYSTEMS COMMAND
P.O. BOX 1500
HUNTSVILLE, AL 35807

DIRECTOR
US ARMY BALLISTIC RESEARCH LABORATORY
ATTN DRDAR-BLV, VULNERABILITY/
LETHALITY DIV
ABERDEEN PROVING GROUND, MD 21005

DISTRIBUTION (Cont'd)

COMMANDER
US ARMY COMM-ELEC ENGR INSTAL AGENCY
ATTN TECH LIB
FORT HUACHUCA, AZ 85613

COMMANDER
US ARMY COMMUNICATIONS COMMAND
COMBAT DEVELOPMENT DIV
FORT HUACHUCA, AZ 85613

COMMANDER
US ARMY COMMUNICATIONS RESEARCH AND
DEVELOPMENT COMMAND
ATTN DRDCO-SE, SYS ENGR & INTEGRATON
ATTN DRDCO-COM, COMMUNICATIONS SCIENCES
ATTN DRCPM-ATC, PM, ARMY TACTICAL
COMMUNICATIONS SYS
ATTN DRDCO-COM-RM4, J. CHRISTIAN
ATTN DRDCO-COM-RM1, L. DWORKIN
ATTN DRDCO-COM-RM1, A. MONDRICK
ATTN DRDCO-COM-RM, I. KULLBACK
ATTN DRDCO-COM, S. DIVITO
FT. MONMOUTH, NJ 07703

CHIEF
US ARMY COMMUNICATIONS SYS AGENCY
FT. MONMOUTH, NJ 07703

COMMANDER
US ARMY COMMUNICATIONS & ELECTRONICS
MATERIEL READINESS COMMAND
ATTN SELEM-ES, DIR FOR ELECTRONICS
SYS MAINTENANCE
FT. MONMOUTH, NJ 07703

COMMANDER
US ARMY COMMUNICATIONS COMMAND AGENCY
USA COMMO AGENCY, WS
WHITE SANDS MISSILE RANGE, NM 88002

COMMANDER
US ARMY COMPUTER SYSTEMS COMMAND
ATTN TECH LIB
FORT BELVOIR, VA 22060

US ARMY OFFICE TEST DIR
JOINT SERVICES
ELECTRO-OPTICAL GUIDED WEAPONS
COUNTERMEASURES TEST PROGRAM
WHITE SANDS MISSILE RANGE, NM 88002

COMMANDER
ERADCOM TECHNICAL SUPPORT ACTIVITY
ATTN DELSD-L, TECH LIB DR
FORT MONMOUTH, NJ 07703

DIRECTOR
ELECTRONIC WARFARE LABORATORY
ATTN DELEW-C, COMM INTEL/CM DIV
FT MONMOUTH, NJ 07703

COMMANDER
US ARMY ELECTRONICS COMMAND
OFFICE OF MISSILE ELECTRONIC WARFARE
WHITE SANDS MISSILE RANGE, NM 88002

COMMANDER
FORT HUACHUCA
DEPT OF THE ARMY
FORT HUACHUCA, AZ 85613

COMMANDER
EWL
ATTN DELEW-I
INTEL MAT DEV & SPT OFFICE
FT MEADE, MD 20755

COMMANDER
US ARMY MATERIALS & MECHANICS
RESEARCH CENTER
ATTN DRXMR-PL, TECHNICAL LIBRARY
WATERTOWN, MA 02172

COMMANDER
US DARCOM FIELD OFFICE
P.O. BOX 5290
KIRTLAND AFB, NM 87117

DIRECTOR OF MATERIEL MANAGEMENT
US ARMY COMMUNICATIONS & ELECTRONICS
MATERIEL READINESS COMMAND
ATTN DRSEL-MME, ELECTRONICS DIV
FORT MONMOUTH, NJ 07703

PROJECT MANAGER, FIREFINDER
DRCPM-FF
FT. MONMOUTH, NJ 07703

PROJECT MANAGER, LANCE
DRCPM-LC
REDSTONE ARSENAL, AL 35809

PROJECT MANAGER
PATRIOT MISSILE SYSTEM, USADARCOM
DRCPM-MD-T-E
REDSTONE ARSENAL, AL 35809

PROJECT OFFICER
US ARMY ELECTRONICS RES & DEV COMM
FORT MONMOUTH, NJ 07703

COMMANDER
US ARMY MISSILE COMMAND
ATTN DRCPM-DT, TOW-DRAGON PROJ OFFICE
ATTN DRDMI-TB, REDSTONE SCIENTIFIC INFO CENTER
ATTN DRDMI-E, ENGINEERING LABORATORY
ATTN DRDMI-ET, TEST & EVALUATION DIR
REDSTONE ARSENAL, AL 35809

DISTRIBUTION (Cont'd)

DIRECTOR
NIGHT VISION & ELECTRO-OPTICS LABORATORY
ATTN DELNV-EO, E-O DEVICES DIV
FORT BELVOIR, VA 22060

COMMANDER
US ARMY NUCLEAR & CHEMICAL AGENCY
ATTN ATCN-W, WEAPONS EFFECTS DIV
7500 BACKLICK RD
BUILDING 2073
SPRINGFIELD, VA 22150

COMMANDER
US ARMY OPERATIONAL TEST
AND EVALUATION AGENCY
ATTN CSTE-ZS, SCI ADVISOR
ATTN CSTE-TM-EWI, ELECTRONIC
WARFARE & INTELLIGENCE SYS
ATTN CSTE-FTD, FIELD TEST DIV
5600 COLUMBIA PIKE
FALLS CHURCH, VA 22041

DIRECTOR
US ARMY RESEARCH & TECHNOLOGY LABS
AMES RESEARCH CENTER
MOFFETT FIELD, CA 94035

ARMY RESEARCH OFFICE (DURHAM)
ATTN TECH LIBRARY
P.O. BOX 12211
RESEARCH TRIANGLE PARK, NC 27709

DIRECTOR
US ARMY SIGNALS WARFARE LABORATORY
ATTN DELSW-TE, TEST & EVAL OFFICE
ATTN DELSW-CE, COMM/EW DIV
VINT HILL FARMS STATION
WARRENTON, VA 22186

COMMANDER
US ARMY TANK-AUTOMOTIVE RES
& DEV COMMAND
DEPT OF THE ARMY
ATTN DRDTA-T, DIR FOR ENGR SUPPORT
WARREN, MI 48090

COMMANDER
HQ, US ARMY TEST & EVALUATION COMMAND
ATTN DRSTE-AD-M, METHODOLOGY
IMPROVEMENT DIV
ABERDEEN PROVING GRROUND, MD 21005

COMMANDER
WHITE SANDS MISSILE RANGE
DEPT OF THE ARMY
ATTN STEWS-CE, COMMUNICATIONS/
ELEC OFFICE
ATTN STEWS-NR, NATIONAL RANGE
OPERATIONS DIR
ATTN STEWS-ID, INSTRUMENTATION DIR
ATTN STEWS-ID-E, ELECTRONICS DIV
WHITE SANDS MISSILE RANGE, NM 88002

COMMANDER
US ARMY ABERDEEN PROVING GROUND
ATTN STEAP-MTM, METHODOLOGY & INST
ABERDEEN PROVING GROUND, MD 21005

COMMANDER
US ARMY ELECTRONICS PROVING GROUND
ATTN STEEP-MT-I, METHOD & INSTR BR
ATTN STEEP-MT-T, TECH TEST SUPPORT
ATTN STEEP-PA-I, TECH INFO CENTER
FORT HUACHUCA, AZ 85613

COMMANDER
US ARMY YUMA PROVING GROUND
ATTN STEYP-MTE, TEST ENGINEERING DIV
YUMA, AZ 85364

COMMANDER
US ARMY ENGINEER SCHOOL
ATTN TECH LIB
FORT BELVOIR, VA 22060

COMMANDANT
US ARMY SOUTHEASTERN SIGNAL SCHOOL
ATTN TECH LIB
FORT GORDON, GA 30905

ASSISTANT SECRETARY OF THE NAVY
RESEARCH, ENGINEERING, & SYSTEMS
DEPT OF THE NAVY
WASHINGTON, DC 20350

CHIEF OF NAVAL MATERIAL
DEPT OF THE NAVY
ATTN NSP-205, ASST FOR FBM
WPN SYS, OPS & EVAL

CHIEF OF NAVAL OPERATIONS
DEPT OF THE NAVY
ATTN DIR, COM & CONTR &
COMMUNICATIONS PROGRAMS
WASHINGTON, DC 20350

CHIEF OF NAVAL RESEARCH
DEPT OF THE NAVY
ATTN TECHNICAL LIBRARY
ARLINGTON, VA 22217

COMMANDER
NAVAL AIR SYSTEMS COMMAND HQ
DEPT OF THE NAVY
ATTN ASST CMDR FOR RES & TECH
ATTN ASST CMDR FOR TEST & EVAL
WASHINGTON, DC 20361

COMMANDER
NAVAL OCEAN SYSTEMS CENTER
ATTN RESEARCH & TECH OFFICE
SAN DIEGO, CA 92152

DISTRIBUTION (Cont'd)

COMMANDER
NAVAL ORDNANCE STATION
INDIANHEAD, MD 20640

SUPERINTENDANT
NAVAL POSTGRADUATE SCHOOL
ATTN LIBRARY, CODE 2124
MONTEREY, CA 93940

DIRECTOR
NAVAL RESEARCH LABORATORY
ATTN 5000, ELECTRONIC SCI & TECH DIR
ATTN 5200, ELECTRONICS TECH DIV
ATTN 5500, OPTICAL SCI DIV
WASHINGTON, DC 20375

COMMANDER
NAVAL SEA SYSTEMS COMMAND HQ
DEPT OF THE NAVY
ATTN NSEA-09G32, TECH LIB
ATTN NSEA-03, RES & TECHNOLOGY DIR
WASHINGTON, DC 20362

COMMANDER
NAVAL SHIP R&D CENTER
ATTN INSTRUMENTATION DEV
BETHESDA, MD 20034

COMMANDER
NAVAL SURFACE WEAPONS CENTER
ATTN DF, ELECTRONICS SYS DEPT
ATTN DF-14, APPLIED ELECTRONIC BR
ATTN DG-30, APPLIED SCIENCE
& MATERIALS DIV
ATTN DX-21, LIBRARY DIV
DAHLGREN, VA 22448

COMMANDER
NAVAL SURFACE WEAPONS CENTER
ATTN WA-31, SENSOR ELECTRONICS BR
ATTN WA-50, NUCLEAR WEAPONS EFFECTS DIV
ATTN WR, RESEARCH & TECHNOLOGY DEPT
ATTN WR-42, ELECTRO-OPTICS BR
WHITE OAK, MD 20910

COMMANDER
NAVAL TELECOMMUNICATIONS COMMAND HQ
ATTN TECHNICAL LIBRARY
4401 MASS AVE NW
WASHINGTON, DC 20390

COMMANDER
NAVAL UNDERWATER SYSTEMS CENTER
ATTN WEAPON SYS DEPT
NEW LONDON, CT 06320

COMMANDER
NAVAL WEAPONS CENTER
ATTN 315, LASER/INFRARED SYS DIV
ATTN 394, ELECTRO-OPTICS DIV
ATTN 06, TEST & EVALUATION DIV
CHINA LAKE, CA 93555

COMMANDER OFFICER
NAVAL WEAPONS EVALUATION FACILITY
KIRTLAND AIR FORCE BASE
ATTN TECH LIBRARY
ALBUQUERQUE, NM 87117

COMMANDER
HQ AERONAUTICAL SYSTEMS DIV (AFSC)
WRIGHT-PATTERSON AFB, OH 45433

COMMANDER
ARNOLD ENGINEERING DEVELOPMENT CENTER
ATTN DY, DIR TECHNOLOGY
ATTN DYR, R&D DIV
ATTN XO, DIR TEST
ARNOLD AIR FORCE STATION, TN 37389

DIRECTOR
AF AVIONICS LABORATORY
ATTN KJ (TE), ELECTRONIC TECH DIV
ATTN KJA (TEO), ELECTRO-OPTICS TECHNOLOGY BR
WRIGHT-PATTERSON AFB, OH 45433

COMMANDER
AF ELECTRONIC SYSTEMS DIVISION
ATTN WO, DEP FOR CONTROL
& COMMUNICATIONS SYS
L. G. HANSCOM AFB, MA 01730

COMMANDER
HQ FOREIGN TECHNOLOGY DIVISION (AFSC)
ATTN YEG (ETW), ELECTRONIC WARFARE DIV
WRIGHT-PATTERSON AFB, OH 45433

COMMANDER
SPACE & MISSILE SYSTEMS ORGANIZATION
(SAMSO)
PO BOX 92960
WORLDWAY POSTAL CENTER
ATTN XR, DEP FOR DEV PLANS
LOS ANGELES, CA 90009

COMMANDER
HQ AIR FORCE SYSTEMS COMMAND
ATTN DL, DIR, SCI & TECHNOLOGY
ATTN TECHNICAL LIBRARY
ANDREWS AFB
WASHINGTON, DC 02334

COMMANDER
HQ AF TEST & EVALUATION CENTER
ATTN TEK, ELECTRONICS DIV
KIRTLAND AFB, NM 87115

COMMANDER
AFWL/DYC
ATTN EL, ELECTRONICS DIV
ATTN COL GERALD P. CHAPMAN
KIRTLAND AFB, NM 87117

DISTRIBUTION (Cont'd)

AMES RESEARCH CENTER
NASA
ATTN TECHNICAL INFO DIV
MOFFETT FIELD, CA 94035

DIRECTOR
NASA
GODDARD SPACE FLIGHT CENTER
ATTN 250, TECH INFO DIV
GREENBELT, MD 20771

JET PROPULSION LABORATORY
CALIFORNIA INSTITUTE OF TECHNOLOGY
ATTN TECHNICAL LIBRARY
4800 OAK GROVE DRIVE
PASADENA, CA 91103

DIRECTOR
NASA
LANGLEY RESEARCH CENTER
ATTN TECHNICAL LIBRARY
HAMPTON, VA 23665

DIRECTOR
NASA
LEWIS RESEARCH CENTER
ATTN TECHNICAL LIBRARY
CLEVELAND, OH 44135

G. E. SPACE DIVISION
P.O. BOX 8555
ATTN DANTE TASCA
ROOM 2432, BLDG 100
PHILADELPHIA, PA 19101

DEUTSCH ELECTRONIC COMPONENTS
ATTN HARRY SPRY
MUNICIPAL AIRPORT
BANNING, CA 92220

CATHOLIC UNIVERSITY OF AMERICA
CARDINAL STATION
P.O. BOX 232
ATTN J. CLARK
WASHINGTON, DC 20017

TRW DEFENSE & SPACE SYSTEMS GROUP
ONE SPACE PARK
ATTN 82/2389, G. ARMSTRONG, R. EASTMAN
ATTN M2/2384, J. TAMBE,
ATTN M1/1338
ATTN M1/1334, P. GOLDSMITH
ATTN M2/2145, S. KIMBLE
REDONDO BEACH, CA 90278

HUGHES RESEARCH LABS
DIV OF HUGHES AIRCRAFT COMPANY
ATTN R. BLAIR
MALIBU CANYON ROAD
MALIBU, CA 90265

EFFECTS TECHNOLOGY INC.
ATTN W. NEAUMAN
ATTN R. WENGLER
ATTN E. BICK
5383 HOLLISTER AVE
SANTA BARBARA, CA 93111

EG&G, INC.
ATTN R. LYNN
ATTN M. NELSON
ATTN T. DAVIES
130 ROBIN HILL ROAD
GOLETA, CA 93017

GENERAL DYNAMICS CORPORATION
ATTN K. WILSON
PO BOX 80986
SAN DIEGO, CA 92138

GALILEO ELECTRO-OPTICS CORPORATION
ATTN R. JAEGER
ATTN L. OWEN
CALILEO PARK
STURBRIDGE, MA 01518

ITT ELECTRO-OPTICAL PRODUCTS DIVISION
ATTN M. MAKLAD
ATTN L. HUYBRECHTS
ATTN A. ASAM
ATTN G. WILHELMI
7635 PLANTATION ROAD
ROANOKE, VA 24019

PHYSICS INTERNATIONAL COMPANY
ATTN F. SAUER
ATTN C. GODFREY
ATTN R. GENUARIO
2700 MERCED STREET
SAN LEANDRO, CA 94577

LOCKHEED MISSILES AND SPACE COMPANY, INC.
ATTN H. POLISKY
WWPC BOX 92915
LOS ANGELES, CA 90009

ROCKWELL INTERNATIONAL CORPORATION
ATTN G. MESSENGER
ATTN D. STILL
PO BOX 3105
ANAHEIM, CA 92803

SCIENCE APPLICATIONS, INC.
ATTN K. SITES
PO BOX 19057
LAS VEGAS, NV 89119

SCIENCE APPLICATIONS, INC.
ATTN P. MILLER
1257 TASMAN DRIVE
SUNNYVALE, CA 94086

DISTRIBUTION (Cont'd)

SPECTRONICS
ATTN L. STEWART
ATTN MR. SHAUNFIELD
830 EAST ARAPAHO
RICHARDSON, TX 75081

SRI INTERNATIONAL
ATTN D. KEOUGH
ATTN G. ABRAHAMSON
333 RAVENSWOOD AVENUE
MENLO PARK, CA 94025

TIMES WIRE AND CABLE
ATTN W. PRIMROSE
358 HALL AVE
WALLINGFORD, CT 06492

US ARMY ELECTRONICS RESEARCH
& DEVELOPMENT COMMAND
ATTN TECHNICAL DIRECTOR, DRDEL-CT

HARRY DIAMOND LABORATORIES
ATTN CO/TD/TSO/DIVISION DIRECTORS
ATTN RECORD COPY 81200
ATTN HDL LIBRARY (3 COPIES) 81100
ATTN HDL LIBRARY, (WOODBRIDGE) 81100
ATTN TECHNICAL REPORTS BRANCH, 81300
ATTN CHAIRMAN, EDITORIAL COMMITTEE
ATTN CHIEF, 21000
ATTN CHIEF, 21100
ATTN CHIEF, 21200
ATTN CHIEF, 21300
ATTN CHIEF, 21400 (2 COPIES)
ATTN CHIEF, 21500 (3 COPIES)
ATTN CHIEF, 22000
ATTN CHIEF, 22100
ATTN CHIEF, 22300
ATTN CHIEF, 22800
ATTN CHIEF, 22900
ATTN DICKINSON, P., BETA-PD
ATTN MILETTA, J., 21100
ATTN WIMENITZ, F., 20240
ATTN KERRIS, K., 22900
ATTN BLACKBURN, J., 22300 (30 COPIES)